ManualsPlus.com

Contents

Figures v
Tables vii

Section 1 General Information
Safety Summary 1-2
Terms in Manuals 1-2
Terms on Equipment 1-2
Symbols in Manuals 1-2
Symbols on Equipment 1-2
Power Source 1-2
Grounding the Product 1-2
Danger Arising from Loss of Ground 1-3
Do Not Operate in Explosive Atmospheres 1-3
Do Not Service Alone 1-3
Use Care When Servicing with Power On 1-3
CRT Handling 1-3
Use the Proper Fuse 1-3
Plug-in Unit Installation and Removal 1-4
New Configuration 1-5
Power Information 1-5
Power Cord Information 1-5
Memory Backup Power 1-7
Operating Environment 1-7
Operating Temperature 1-7
Ventilation Requirements 1-7
Packaging for Shipment 1-8
Instrument Options 1-9

Section 2 Checks and Adjustments
Minimizing the Power-Off Time 2-6
Test Equipment 2-6
RS-232-C Cable Requirements 2-6
Using These Procedures 2-9
Conventions in this Manual 2-9
Menu Selections and Measurement Techniques 2-9
Tutorial Manual 2-10
Initializing the DSA 2-10
Part 1 Power-On Diagnostics 2-11
Setup to Perform Power-On Diagnostics 2-11
Procedure to Perform Power-On Diagnostics 2-11
Kernel Diagnostics 2-12
Self-Test Diagnostics 2-12
Completion of Power-On Diagnostics 2-13
New Configuration 2-13
Part 2 Extended Diagnostics 2-14
Setup to Invoke Extended Diagnostics 2-14
Procedure to Invoke Extended Diagnostics 2-14

ManualsPlus.com

Section 3 Maintenance (cont.)

Corrective Maintenance 3-3
- Power Supply Voltage Hazard 3-3
- Ordering Parts 3-3
- Static-Sensitive Device Classification 3-3
- Removing/Replacing FRUs 3-4
- Electrical Lock-On of the Front Panel ON/STANDBY Power Switch 3-9
- Battery Disposal and First Aid 3-12
- Cathode Ray Tube (CRT) Removal/Replacement 3-14
- Fan Motor Removal/Replacement 3-21
- Power Supply Module Removal/Replacement 3-23
- FRU Board and Assembly Removal/Replacement 3-26
- FRU IC Removal 3-71
- Cables and Connectors 3-84
- Interconnecting Pins 3-84
- Checks After FRU Replacement 3-86

Diagnostic Troubleshooting 3-89
- Diagnostics Overview 3-89
- Extended Diagnostics Menu Structure 3-92

Enhanced Accuracy State Troubleshooting 3-112
- Probe Compensation Troubleshooting 3-113

Other Troubleshooting 3-114
- Power Supply Module 3-114
- A4 Regulator Board 3-114
- CRT, A16 Display Controller Board, A24 CRT Driver Board, A25 Degauss Board, A26 Geometry Board, and A27 CRT Socket Board 3-114
- A13 Mother Board 3-118
- Fuse Testing 3-118

Section 4 Theory of Operation

System Functional Overview 4-2
Plug-in Interface Block 4-2
Acquisition Block 4-2
Waveform Processing Block 4-2
Digitizer Block 4-3
Memory Management Unit Block 4-3
Display Control Block 4-3
I/O Block 4-3
Front Panel Controls 4-4
Rear Panel Block 4-4
Executive Processor Block 4-4
Memory Block 4-4
Power Supply 4-4
Typical Waveform Processing Cycle 4-5
Detailed Block Diagram 4-5
- A1 Plug-in Interface Board 4-9
- A4 Regulator Board 4-9
- A5 Calibrator Board 4-11
- A6 Lower Acquisition and A7 Upper Acquisition Boards 4-13
- A8 Waveform Processor Board 4-17
- A8 Signal Processor Board 4-20
- A9, A10, and A11 Front Panel Boards 4-23

ManualsPlus.com

Section 4 Theory of Operation (cont.)
A12 Rear Panel Assembly 4-24
A13 Mother Board 4-26
A14 Input/Output (I/O) Board 4-27
A15 Memory Management Unit (MMU) Board 4-29
A16 Display Controller Board 4-31
A17 Main Processor Board 4-33
A18 BB Memory Board 4-35
A19 Digitizer CPU Board 4-37
A20 Digitizer I/O Board 4-39
A21 Mini Mother Board 4-40
A24 CRT Driver Board 4-41
A25 Degauss Board 4-43
A26 Geometry Board 4-43
A27 CRT Socket Board 4-44

Figures

Figure 1-1 Plug-in Compartments in the DSA 601 and DSA 602 1-4
Figure 2-1 A8 Waveform Processor (Signal Processor) Board Test Point Locations 2-17
Figure 2-2 A2A2 Control Rectifier Board Test Point and Adjustment Locations 2-19
Figure 2-3 A4 Regulator Board Test Point and Adjustment Locations . . . 2-21
Figure 2-4 A24 CRT Driver Board Test Point and Adjustment Locations . 2-28
Figure 2-5 A26 Geometry Board Adjustment Locations 2-29
Figure 2-6 A27 CRT Socket Board Adjustment Locations 2-29
Figure 2-7 A5 Calibrator Board Adjustment Locations 2-34
Figure 2-8 A14 I/O Board (Temperature Sensor) Test Point and Adjustment Locations 2-36
Figure 2-9 A7 Upper Acquisition Board Test Point Locations 2-39
Figure 2-10 A5 Calibrator Board Adjustment Location 2-40
Figure 2-11 Location of the CAL jumper on the A19 Digitizer CPU 2-47
Figure 3-1 Field Replaceable Units (FRU) Locator 3-10
Figure 3-2 Removing/Replacing the CRT Shield 3-15
Figure 3-3 Removing/Replacing the CRT Faceplate Torx Head Screws . 3-16
Figure 3-4 Removing/Replacing the CRT 3-18
Figure 3-5 Removing/Replacing the Left Side Frame Section and Raising the Platform 3-19
Figure 3-6 Removing/Replacing the Degauss Coils 3-20
Figure 3-7 Removing/Replacing the Fan Motors 3-22
Figure 3-8 Removing/Replacing the Power Supply Module 3-24
Figure 3-9 A2A2 Control Rectifier Board Connector Locations 3-25
Figure 3-10 Top View of the Card Cage 3-26
Figure 3-11 Plug-in Interface Connector Receptacles Torx Head Screw Locations 3-29
Figure 3-12 Removing/Replacing the A1 Plug-in Interface Board 3-30
Figure 3-13 Removing/Replacing the A4 Regulator Board 3-31
Figure 3-14 Removing/Replacing the Front Panel Calibrator's $^1/_4$-Inch Nuts 3-32
Figure 3-15 Removing/Replacing the A5 Calibrator Board 3-33
Figure 3-16 Removing/Replacing the A6 Lower Acquisition Board 3-35
Figure 3-17 Removing/Replacing the A7 Upper Acquisition Board 3-37

ManualsPlus.com

Figure 3-18 Removing/Replacing the A8 Waveform Processor (Signal Processor) Board 3-39
Figure 3-19 Removing/Replacing the A9 Touch Panel Assembly Torx Head Screws 3-40
Figure 3-20 Removing/Replacing the A9 Touch Panel Assembly 3-41
Figure 3-21 Removing/Replacing the A10 Front Panel Control Board 3-43
Figure 3-22 Removing/Replacing the A11 Front Panel Button Board 3-45
Figure 3-23 Removing/Replacing the A12 Rear Panel Assembly 3-47
Figure 3-24 Removing/Replacing the A13 Mother Board 3-49
Figure 3-25 Removing/Replacing the A14 I/O Board 3-51
Figure 3-26 Removing/Replacing the A15 MMU Board 3-53
Figure 3-27 Removing/Replacing the A16 Display Controller Board 3-55
Figure 3-28 Removing/Replacing the A17 Main Processor Board 3-57
Figure 3-29 Removing/Replacing the A18 BB Memory Board 3-59
Figure 3-30 Removing/Replacing the A19 Digitizer CPU Board 3-61
Figure 3-31 Removing/Replacing the A20 Digitizer I/O board 3-63
Figure 3-32 Removing/Replacing the A21 Mini Mother Board 3-64
Figure 3-33 Removing/Replacing the Trap Door Torx Head Screws 3-66
Figure 3-34 Removing/Replacing the A24 CRT Driver Board 3-66
Figure 3-35 Removing/Replacing the A25 Degauss Board 3-67
Figure 3-36 Removing/Replacing the A26 Geometry Board 3-69
Figure 3-37 Removing/Replacing the A27 CRT Socket Board 3-70
Figure 3-38 FRU IC Detail 3-72
Figure 3-39 Semiconductor Indexing Diagram 3-74
Figure 3-40 IC Insertion-Extraction Pliers 3-76
Figure 3-41 Trigger IC Assembly 3-80
Figure 3-42 Multi-Pin Connector Orientation 3-86
Figure 3-43 Diagnostics Flowchart 3-90
Figure 3-44 A17 Main Processor Board Status Pins 3-98
Figure 3-45 A16 Display Controller Board Status Pins 3-105
Figure 3-46 A19 Digitizer CPU Board Status Pins 3-108
Figure 3-47 A2A2 Control Rectifier Board LEDs 3-117
Figure 3-48 A14 I/O Board Fuse Locator Diagram 3-119
Figure 4-1 DSA 601 and DSA 602 System Functional Block Diagram . . . 4-2
Figure 4-2 DSA 601 and DSA 602 Detailed Block (Cabling) Diagram 4-7
Figure 4-3 A4 Regulator Board Block Diagram 4-9
Figure 4-4 A5 Calibrator Board Block Diagram 4-11
Figure 4-5 A6 Lower Acquisition Board Block Diagram 4-13
Figure 4-6 A7 Upper Acquisition Board Block Diagram 4-14
Figure 4-7 A8 Waveform Processor Block Diagram 4-17
Figure 4-8 A8 Signal Processor Board Block Diagram 4-20
Figure 4-9 A12 Rear Panel Assembly Block Diagram 4-24
Figure 4-10 A14 I/O Board Block Diagram 4-27
Figure 4-11 A15 MMU Board Block Diagram 4-29
Figure 4-12 A16 Display Controller Board Block Diagram 4-31
Figure 4-13 A17 Main Processor Board Block Diagram 4-33
Figure 4-14 A18 BB Memory Board Block Diagram 4-35
Figure 4-15 A19 Digitizer CPU Board Block Diagram 4-37
Figure 4-16 A20 Digitizer I/O Board Block Diagram 4-38
Figure 4-17 A24 CRT Driver Board Block Diagram 4-41
Figure 4-18 A26 Geometry Board Block Diagram 4-43

ManualsPlus.com

Tables

Table 1-1	Power Cord Conductor Identification	1-5
Table 1-2	Power-Cord and Plug Identification	1-6
Table 2-1	Measurement Limits, Specifications, Adjustments, and Functional Tests	2-1
Table 2-2	Test Equipment	2-7
Table 2-3	Illuminance Levels	2-27
Table 2-4	Trigger Sensitivity DSA Settings	2-64
Table 2-5	Trigger Sensitivity Generator Settings	2-65
Table 3-1	Relative Susceptibility to Damage from Static Discharge	3-4
Table 3-2	FRU Removal/Replacement Figure Cross Reference	3-5
Table 3-3	Emergency Procedures	3-13
Table 3-4	Demux, Utility, Sweep Controller, and Clock Driver IC Locator	3-75
Table 3-5	Sample/Hold and Flash IC Locator	3-77
Table 3-6	Checks Required After FRU Replacement	3-86
Table 3-7	Board FRUs/Assemblies	3-95
Table 3-8	FRU Components and Modules	3-96
Table 3-9	Executive Processor Kernel Error Index Codes	3-97
Table 3-10	Executive Processor Status LED Configuration	3-98
Table 3-11	Executive Processor Self-Test/Extended Diagnostics Error Index Codes	3-99
Table 3-12	Executive Processor Manual Tests	3-100
Table 3-13	Display Processor Kernel Error Index Codes	3-104
Table 3-14	Display Processor Status LED Configuration	3-104
Table 3-15	Display Processor Self-Test/Extended Diagnostics Error Index Codes	3-105
Table 3-16	Display Processor Manual Test	3-106
Table 3-17	Digitizer Processor Kernel Diagnostic Tests Error Index Codes	3-107
Table 3-18	Digitizer Processor Status LED Configuration	3-107
Table 3-19	Digitizer Processor Self-Test/Extended Diagnostics Error Index Codes	3-109
Table 3-20	Enhanced Accuracy State Error Messages and Troubleshooting	3-112
Table 3-21	Probe Compensation Error Messages and Troubleshooting	3-113
Table 3-22	A14 I/O Board Fuse Failures	3-120

ManualsPlus.com

ManualsPlus.com

General Information

This *DSA 601 and DSA 602 Digitizing Signal Analyzer Service Reference* manual is designed for use by qualified service personnel. It contains information necessary to check, troubleshoot, and maintain the DSA 601 and DSA 602 Digitizing Signal Analyzers.

Troubleshooting is primarily based upon internal power-on diagnostics. These diagnostics isolate problems to the field replaceable unit (FRU) level. Defective FRUs not detected by diagnostics are isolated using other troubleshooting methods. Once the faulty FRU is identified, use the instructions provided in this manual to remove and replace this faulty FRU. The removal and immediate replacement of the faulty FRU will minimize downtime. Section 5, Replaceable Parts gives a complete list of the FRUs in the DSA.

First-time users are encouraged to read *The DSA 601 and DSA 602 Digitizing Signal Analyzer Tutorial*. This tutorial will familiarize you with the basic functions of the DSA.

This section contains safety information and information about installing and removing a plug-in unit, applying power, proper environmental conditions, shipping the DSA, and instrument options.

ManualsPlus.com

Safety Summary

This general safety information is directed to operators and service personnel. Specific warnings and cautions will be found throughout the manual where they apply, but may not appear in this summary.

Terms in Manuals

CAUTION statements in manuals identify conditions or practices that could result in damage to the equipment or other property.

WARNING statements in manuals identify conditions or practices that could result in personal injury or loss of life.

Terms on Equipment

CAUTION on equipment means a personal injury hazard not immediately accessible as one reads the marking, or a hazard to property including the equipment itself.

DANGER on equipment means a personal injury hazard immediately accessible as one reads the marking.

Symbols in Manuals

Static Sensitive Devices

Symbols on Equipment

DANGER High Voltage

Protective ground (earth) terminal

ATTENTION Refer to manual

Power Source

This product is intended to operate from a power source that will not apply more than 250 V rms between the supply conductors or between either supply conductor and ground. A protective ground connection, by way of the grounding conductor in the power cord, is essential for safe operation.

Grounding the Product

The DSA is grounded through the grounding conductor in the power cord. To avoid electric shock, plug the power cord into a properly wired receptacle before making connections to the DSA input or output terminals. A protective-ground connection, by way of the grounding conductor in the power cord, is essential for safe operation.

ManualsPlus.com

Danger Arising from Loss of Ground

Upon loss of the protective-ground connection, all accessible conductive parts (including knobs and controls that may appear to be insulating) can render an electrical shock.

Do Not Operate in Explosive Atmospheres

To avoid explosion, do not operate the DSA in an atmosphere of explosive gasses.

Do Not Service Alone

Do not perform internal service or adjustment of this product unless another person capable of rendering first aid and resuscitation is present.

Use Care When Servicing with Power On

Dangerous voltages exist at several points in the DSA. To avoid personal injury, do not touch exposed connections and components while the PRINCIPAL POWER SWITCH is ON.

Disconnect the power before removing protective panels, soldering, or replacing components.

CRT Handling

Use care when handling a CRT. Breakage of the CRT causes a high-velocity scattering of glass fragments (implosion). Protective clothing and safety glasses should be worn. Avoid striking the CRT on any object which might cause it to crack or implode. When storing a CRT, place it in a protective carton or place it face down in a protected location on a smooth surface with a soft mat under the faceplate.

Use the Proper Fuse

To avoid fire hazard, use only a fuse which is identical in type, voltage rating, and current rating to the fuse specified in Section 5, Replaceable Parts.

ManualsPlus.com

Plug-in Unit Installation and Removal

To install a plug-in unit in a DSA 601 or DSA 602:

1. Set the ON/STANDBY switch to STANDBY to prevent damage to the DSA.
2. Align the grooves in the top and bottom of the plug-in unit with the guides in the plug-in compartment of the DSA (see Fig. 1-1).
3. Insert the plug-in unit into the DSA until the front panel of the plug-in unit is flush with the front panel of the DSA.

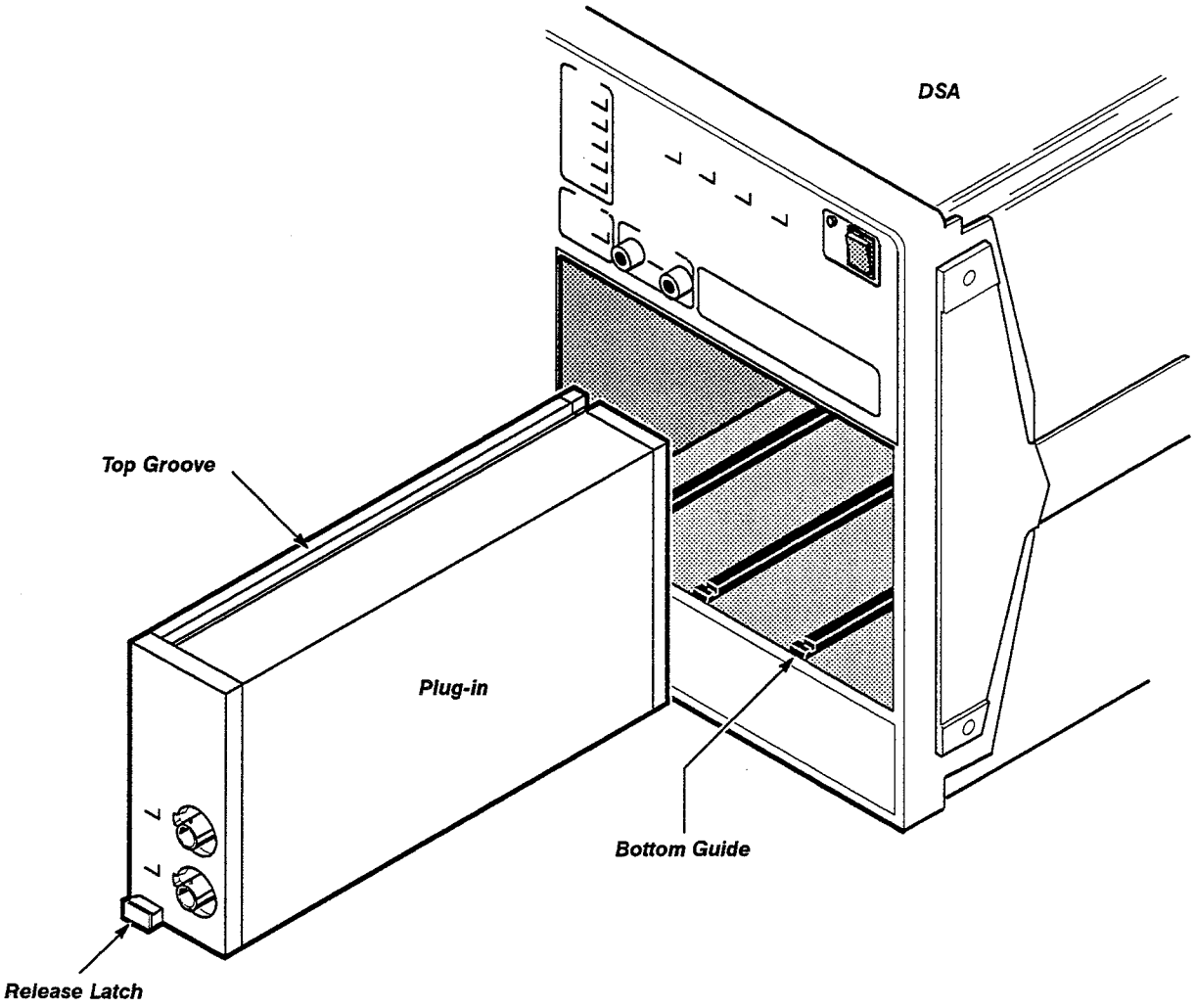

***Figure 1-1** — Plug-in Compartments in the DSA 601 and DSA 602*

CAUTION *Never install or remove a plug-in when the ON/STANDBY switch is ON.*

To remove the plug-in unit from the DSA 601 or DSA 602:

1. Set the ON/STANDBY switch to STANDBY to prevent damage to the DSA.
2. Pull the release latch to disengage the plug-in unit from the DSA (see Fig. 1-1).
3. Remove the plug-in unit from the plug-in compartment.

ManualsPlus.com

New Configuration

When a plug-in unit is first installed in a DSA or when one is moved to a different compartment, the DSA will be in a new configuration mode. After the DSA performs Self-Tests diagnostics, it performs a partial Enhanced Accuracy for the new configuration. During this partial Enhanced Accuracy, the message **New configuration partial enhanced accuracy occurring** will appear at the top of the display. If the operation is successful, as indicated by a message, the DSA will enter the normal operating mode.

Power Information

The rear panel LINE VOLTAGE SELECTOR allows you to select either a 115 V or 230 V (48 to 72 Hz) nominal supply source. Both the 115 V and 230 V operation use the 6 A, 250 V line fuse.

WARNING

AC POWER SOURCE AND CONNECTION. *The DSA operates from a single-phase power source. It has a three-wire power cord and two-pole, three-terminal grounding type plug. The voltage to ground (earth) from either pole of the power source must not exceed the maximum rated operating voltage, 250 V.*

Before connecting the power source, ensure that the LINE VOLTAGE SELECTOR is set to match the voltage of the power source, and that the power cord has a suitable two-pole, three-terminal grounding-type plug.

GROUNDING. *The DSA is safety Class 1 equipment (IEC designation). All accessible conductive parts are directly connected through the grounding conductor of the power cord to the grounded (earthing) contact of the power plug.*

Only insert the power input plug in a mating receptacle with a grounding contact where earth ground has been verified by a qualified service person. Do not defeat the grounding connection. Any interruption of the grounding connection can create an electrical shock hazard.

For electric shock protection, connect the power source to ground before connecting the power source to the DSA input or output terminals.

Power Cord Information

A power cord with appropriate plug configuration is supplied with each DSA. Table 1-1, Power-Cord Conductor Identification, gives the color-coding of the conductors in the power cord. If you require a power cord other than the one supplied, refer to Table 1-2, Power-Cord and Plug Identification.

Table 1-1 *— Power Cord Conductor Identification*

Conductor	Color	Alternate Color
Ungrounded (Line)	Brown	Black
Grounded (Neutral)	Light Blue	White
Grounded (Earthing)	Green/Yellow	Green

ManualsPlus.com

Table 1-2 — Power-Cord and Plug Identification

Plug Configuration	Usage (Max Rating)	Reference Standards & Certification	Option #
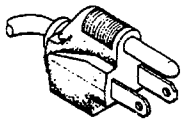	North American 125 V/6 A	[1]ANSI C73.11 [2]NEMA 5-15-P [3]IEC 83 [10]UL [11]CSA	Standard
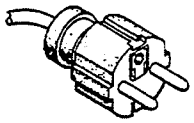	European 220 V/6 A	[3]ICE 83 [4]CEE (7), II, IV, VII [8]VDE [9]SEMKO	A1
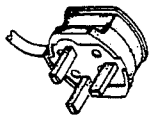	United Kingdom 240 V/6 A	[3]IEC 83 [5]BSI 1363	A2
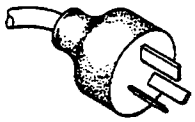	Australian 240 V/6 A	[6]AS C112 [12]ETSAF	A3
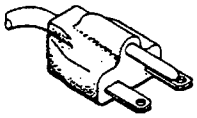	North American 240 V/15 A	[1]ANSI C73.20 [2]NEMA 6-15-P [3]IEC 83 [10]UL [11]CSA	A4
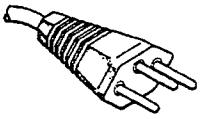	Switzerland 220 V/10 A	[7]SEV	A5

[1]ANSI—American National Standards Institute
[2]NEMA—National Electrical Manufacturers' Association
[3]IEC—International Electrotechnical Commission
[4]CEE—International Commission on Rules for the Approval of Electrical Equipment
[5]BSI—British Standards Institute
[6]AS—Standards Association of Australia
[7]SEV—Schweizevischer Elektrotechischer Verein
[8]VDE—Verband Deutscher Elektrotechniker
[9]SEMKO—Swedish Institute for Testing and Approval of Electrical Equipment
[10]UL—Underwriters Laboratories
[11]CSA—Canadian Standards Association
[12]ETSA—Electricity Trust of South Australia

ManualsPlus.com

Memory Backup Power

There are two self-contained power sources within the DSA that allow the retention of volatile memory upon loss of the AC power source. These self-contained power sources provide memory backup power for the following purposes:

- To retain front panel settings to continue recording the number of hours of DSA on-time and power-on sequences.
- To retain stored settings
- To retain **Time & Date** parameters

The self-contained power sources have a nominal shelf life of approximately five years.

Operating Environment

The following environmental requirements are provided so that you can ensure proper functioning and extend the operation of your DSA.

Operating Temperature

You should operate the DSA between ambient air temperatures of 0° and +50°C and store between ambient temperatures of −40° to +75°C. After storing the DSA at temperatures outside the operating limits, allow the chassis to reach the safe operating temperature before applying power.

Ventilation Requirements

The fans draw air through the side panels of the DSA and blow air out through the rear to cool the DSA. To ensure that this ventilation occurs properly, allow at least two inches clearance on both sides and at the rear of the DSA. The top and bottom of the DSA do not require ventilation clearance.

CAUTION *If air flow is restricted, the DSA's power supply may temporarily shut down.*

ManualsPlus.com

Packaging for Shipment

If you are shipping the DSA long distances by commercial transportation, then package the DSA in the original manner. (The carton and packaging material in which your DSA was shipped should be saved and used for this purpose.)

Also, if you are shipping the DSA to a Tektronix service center for service or repair, attach a tag to the DSA showing the following:

- Owner of the DSA (with address)
- Name of person to contact at your firm
- Complete DSA type and serial number
- If possible, furnish complete system firmware versions as displayed in the **Instr Config** pop-up menu selected from the UTILITY major menu
- A description of the service required

If the original packaging is unfit for use or not available, then package the DSA as follows:

- ☐ Step 1: Obtain a corrugated cardboard shipping carton with a 375-pound test strength and having inside dimensions at least six inches greater than the DSA dimensions, to allow for cushioning.
- ☐ Step 2: Wrap the DSA with polyethylene sheeting or equivalent material to protect the finish.
- ☐ Step 3: To cushion the DSA on all sides, tightly pack dunnage or urethane foam between the carton and the DSA; allowing three inches on each side.
- ☐ Step 4: Seal the carton with shipping tape or with an industrial stapler.
- ☐ Step 5: Mark the address of your local Tektronix service center and your return address on the carton in one or more prominent locations.

ManualsPlus.com

Instrument Options

Your DSA may be equipped with one or more instrument options. A brief description of each available option is given in the following discussion. Option information is incorporated into the appropriate sections of the manual. Refer to the Contents for the location of option information. For further information and prices of instrument options, see your *Tektronix Products Catalog* or contact your local Tektronix service center.

Option 1C—adds eight BNC connectors to the front and rear panels so that you can route signals to the front or rear of the DSA. This option can be ordered at any time.

Option 1R—adds slide rails and rackmounting hardware to convert the benchtop DSA to a standard 19-inch rackmount version. This option can be added at any time.

Option 2R—deletes the K217S scopemobile cart. This option is usually ordered whenever Option 1R is ordered.

Option 3C—replaces the standard A8 Waveform Processor board with the A8 Signal Processor board. The A8 Signal Processor board provides less waveform processing capability and none of the Tristar features such as: FFT, Act on Delta, and Dejitter. Option 3C also includes a rear panel connection for external battery power to back up the acquisition memory for single-shot acquisition. This option is available at any time.

Option 4C—adds non-volatile memory for internal storage of 468,288 waveform points. This option can be added at any time.

Option 1P—adds an HC100 Four-color Plotter.

Option 2P—adds an HC100 Four-color Plotter compatible with European power.

Option 3P—adds an 4693DX Color Image Printer.

Option 25—adds PEP 301 Systems Controller and Utility Software.

Option A1—replaces the standard power cord with the Universal European 220 V-type power cord.

Option A2—replaces the standard power cord with the United Kingdom 240 V-type power cord.

Option A3—replaces the standard power cord with the Australian 240 V-type power cord.

ManualsPlus.com

ManualsPlus.com

Checks and Adjustments

This section contains procedures to examine measurement limits, check electrical specifications, and to set all internal adjustments listed in Table 2-1, Measurement Limits, Specifications, and Adjustments. This procedure provides a logical sequence of check and adjustment steps intended to return the DSA to specified operation following repair, or as a part of a routine maintenance program. To functionally test the DSA, perform the parts which have a "yes" indication in the Functional Test column of Table 2-1, Measurement Limits, Specifications, Adjustments and Functional Tests.

The Checks and Adjustment procedure contains manual and automated tests. The automated procedures use the Checks and Adjustments Software operating on an IBM-compatible personal computer (PC) to control the DSA. The PC controls the DSA under test through the COM1 RS-232-C port.

At the beginning of each part the specifications or measurement limits are given. Then, the setup for each procedure in that part provides information concerning test equipment setup or interconnection. Refer to Table 2-2 for more information concerning test equipment used in the setups.

Refer to the *DSA 601/DSA 602 User Reference* manual for more information about advertised specifications and DSA operation.

***Table 2-1** — Measurement Limits, Specifications, Adjustments, and Functional Tests*

Part and Description	Measurement Limits *(Examine)*	Specifications *(Check)*	Adjustments *(Adjust)*	Functional Test
Part 1 Power-On Diagnostics	none	none	none	yes
Part 2 Extended Diagnostics	none	none	none	yes
Part 3 Power Supply				no
Voltage Supply	+4.85 to +5.25 V	none	none	
Voltage Reference	+5.15 to +5.25 V	none	R835 +5.2 V Ref for +5.20 V	
Regular Reference	+9.95 to +10.05 V	none	R321 +10 V Ref for +10.00 V	
Part 4 Display	voltage difference from TP760 to TP761 must be between ≥24.0 V and ≤24.5 V		Vert Size, R700, for 24.25 V between TP760 and TP761 Grid, R113, until the raster lines just disappear Horiz Hold, R962, for a stable, synchronized display	no

ManualsPlus.com

Table 2-1 — Measurement Limits, Specifications, Adjustments, and Functional Tests (Cont.)

Part and Description	Measurement Limits *(Examine)*	Specifications *(Check)*	Adjustments *(Adjust)*	Functional Test
Part 4 Display (cont)	vertical size so that grid aligns with the tic marks within .050 inches		Vert Hold, R760, and Vert Size, L750, to align the grid with the tic marks	
	horizontal size and linearity so that grid aligns with the tic marks within .050 inches and the grid boxes are uniform in length		Horiz Lin, R961, Horiz Size, R867, Horiz Pos, R866, for optimum linearity and position	
			Horiz Tilt, R800, for a level center-horizontal line	
			Pin Cushion, R500, for straight horizontal lines	
			Right Ampl, R400, for straight horizontal lines on the right side of the display	
			Left Ampl, R200, for straight horizontal lines on the left side of the display	
	interactive adjustments produce optimum grid geometry		Apex Point, R300, for linearity between the left and right side adjustments	
	convergence of colors in grid pattern within one line width at the extreme edges of the display		Convergence, R102, for optimum vertical convergence. Horizontal Convergence for optimum horizontal convergence	
	proper color balance (gray background)		Red, R100, Green, R110, Blue, R111, adjustments for a grey background color	
	red display for 16.2 ±0.5 Foot Lamberts		Red Gain, R200, for 16.2 Foot Lamberts	
	green display for 43.3 ±1.3 Foot Lamberts		Green Gain, R210, for 43.3 Foot Lamberts	

ManualsPlus.com

Table 2-1 — Measurement Limits, Specifications, Adjustments, and Functional Tests (Cont.)

Part and Description	Measurement Limits *(Examine)*	Specifications *(Check)*	Adjustments *(Adjust)*	Functional Test
Part 4 Display (cont)	Blue display for 6.9 ±0.2 Foot Lamberts		Blue Gain, R220, for 6.9 Foot Lamberts HV Reg, R865, for minimum movement of white border pattern Focus, R111, for minimum vertical line width	
Part 5 Low Frequency Square Wave	Frequency = 1 kHz ± 1%	Amplitude = 500 mV ±15 mV into a 50 Ω load	none	yes
Part 6 Calibrator DC Level Accuracy		Cal_Ref High into 1 MΩ load must yield −9.95 V ±10 mV Cal_Ref Low into 1 MΩ load must yield −10.000 V ±10 mV Cal_Ref High into 50 Ω load must yield −1.000 V + (+6 mV or −7 mV) Cal_Ref Low into 50 Ω load must yield −1.000 V ±6 mV	Gain, R238, and Offset, R237, adjustments for 9.9995 ±1 mV and −10.000 V ±1 mV	no
Part 7 Input/Output				
Temperature Sensor Voltage Reference	6.5000 V ±5 mV		Temp Sensor Voltage Ref, R112, for +6.5000 V	
Part 8 ACVS Gain	the difference between TP400 high and TP400 low must be 2.715 V ±500 μV		ACVS Gain, R723, for $V_2 - V_5$ = 2.715 V ±500 μV	no
Part 9 Field Calibration	none	none	none	no
Part 10 Enhanced Accuracy	successful operation		none	yes

ManualsPlus.com

Table 2-1 — Measurement Limits, Specifications, Adjustments, and Functional Tests (Cont.)

Part and Description	Measurement Limits *(Examine)*	Specifications *(Check)*	Adjustments *(Adjust)*	Functional Test
Part 11 Probe Calibration	successful operation		none	yes
Part 12 Vertical Gain Accuracy	vertical gain accuracy within ±1% for all pipe paths		none	no
Part 13 Time Base Accuracy		time base accuracy must be within 0.005% of the measurement interval	none	no
Part 14 Window Record Accuracy		±0.005% of the reading ±150 ps ±(100 ps/$\sqrt{n}$), for n averages	none	no
Part 15 Trigger Level Accuracy		trigger level accuracy must be within 2% of full scale	none	yes
Part 16 Trigger Sensitivity	The display will not trigger at:	The display will trigger at:	none	no
	DC coupled −0.1 div up to 1 GHz	DC coupled −0.4 div from DC to 10 MHz, increasing to 1 div at 1 GHz.		
	DC Noise Reject Coupled −0.5 div up to 1 GHz	DC Noise Reject Coupled −1.2 div from DC to 10 MHz, increasing to 3 div at 1 GHz		
	AC Coupled −0.1 div up to 1 GHz	AC Coupled −0.4 div from 60 Hz to 10 MHz, increasing to 1 div at 1 GHz		
	AC HF Reject Coupled −0.1 div up to 30 kHz	AC HF Reject Coupled − 0.5 div from 60 kHz to 30 kHz		
	AC LF Reject Coupled −0.1 div up to 1 GHz	AC LF Reject Coupled − 0.5 div from 80 kHz to 10 MHz, increasing to 1 div at 1 GHz		
Part 17 Cable Characterization	propagation delay of 1.7 ns to 2.0 ns		none	no

ManualsPlus.com

Table 2-1 — Measurement Limits, Specifications, Adjustments, and Functional Tests (Cont.)

Part and Description	Measurement Limits *(Examine)*	Specifications *(Check)*	Adjustments *(Adjust)*	Functional Test
Part 18 Boolean Trigger Minimum True Width		the display will trigger if the Boolean trigger minimum true time is 2.0 ns	none	no
Part 19 Boolean Trigger Minimum False Time		the display will trigger if the Boolean trigger minimum false time is 2.0 ns	none	no
Part 20 Edge Qualified Trigger		Enable to Edge – the display must trigger if the Enable trigger source is true at least 2 ns before the Edge trigger source Edge to Enable – the display must trigger if the Enable trigger is true at least 2 ns after the Edge trigger source Setup and Hold time, Edge to itself – the display must trigger if the Edge trigger source is true at least 2 ns immediately before and after the selected transition.		no
Part 21 Maximum Event Frequency		maximum event frequency is 400 MHz at 50% duty cycle	none	no

ManualsPlus.com

Minimizing the Power-Off Time

During the procedure you will be asked to install and remove plug-in units. These tasks require a power-off with the ON/STANDBY switch. You should try to keep the power-off time to a minimum in order to reduce the internal temperature change. The DSA accuracy is adversely affected by internal changes in temperature. In normal operation, Enhanced Accuracy is available only after a 20-minute warmup period. In order to preserve the Enhanced Accuracy state, minimize the power-off time as much as possible.

When moving plug-in units, a quick transfer (i.e., about 15 seconds) and power-up will essentially preserve the internal temperature and the Enhanced Accuracy state. Disconnect any cables or probes before beginning to move a plug-in unit. An excessive delay in powering on (beyond 30 seconds) will mean a warm-up period is necessary.

Whenever possible, place plug-in units in unoccupied plug-in compartments of the DSA to maintain their internal temperature. This configuration is not always shown in the setup, but it will not affect any of the tests.

Test Equipment

Table 2-2 contains suggested test equipment used in this manual. The Functional Test column of Table 2-2 indicates, with a check mark (✓), the test equipment that is recommended if you are only performing a functional test. Procedure steps are based on the test equipment examples given, but other equipment with similar specifications may be substituted. Test results, Setup information, and related connectors and adapters may be altered by the use of different equipment.

RS-232-C Cable Requirements

The RS-232-C cable that connects the PC COM1 port with the DSA under test should be a standard controller-to-modem (DCE-DTE) type cable. The type of RS-232-C connector your PC has will determine the type of connectors your cable must have. The two most common connectors are the 25-pin D type and the 9-pin D type. The 25-pin to 25-pin cable should at least have pins 2-2, 3-3, 4-4, 5-5, 7-7, 8-8, and 20-20 connected. The 9-pin to 25-pin RS-232-C cable should be wired as follows:

9-Pin Connector	25-Pin Connector
1 (DCD)	8 (DCD)
2 (RD)	2 (RD)
3 (TD)	3 (TD)
4 (DTR)	6 (DSR)
5 (Sig GND)	7 (Sig GND)
6 (DSR)	20 (DTR)
7 (RTS)	5 (CTS)
8 (CTS)	4 (RTS)
9 (NC)	22 (RI)

ManualsPlus.com

Table 2-2 — Test Equipment

Description	Minimum Specification	Examples of Applicable Test Equipment	Functional Test
PC Controller	IBM PC-compatible; with two floppy drives, floating point co-processor, RS-232-C port, 640 kbytes memory, and MS DOS 2.1 or greater	Compaq	
Function Generator	60 Hz to 250 kHz, Variable off-set, Amplitude variable from 0 to 10 V, sine wave output	TEKTRONIX FG 5010 Function Generator with a TM 500-Series Power Module	✓
Medium Frequency Sine Wave Generator	250 kHz to 250 MHz, variable amplitude, 50 kHz reference	TEKTRONIX SG 503 Leveled Sine Wave Generator with a TM 500-Series Power Module	
Time Mark Generator	200 MHz, accuracy within ±0.001%.	TEKTRONIX TG 501 Time Mark Generator with a TM 500-Series Power Module	
High Frequency Sine Wave Generator	250 MHz to 1000 MHz, Variable amplitude, 6 MHz reference	TEKTRONIX SG 504 Leveled Sine Wave Generator with a TM 500-Series Power Module with SG 504 Output Head	
Calibration Generator	Fast Rise Output, 1.0 ns risetime; square wave output	TEKTRONIX PG 506 Calibration Generator with a TM 500-Series Power Module	
Power Supplies Troubleshooting Fixture		TEKTRONIX 067-1264-00 Extended Diagnostics 11000-Series Power Supplies Troubleshooting Fixture	
Photometer	Calibrated with probe by standard calibration: 3100°K Tungsten white light.	TEKTRONIX J16 Photometer/ Radiometer	
Illuminance Probe	Accuracy within 5% of NBS standards ±1 digit (least significant)	TEKTRONIX J6503 Illuminance Probe	
Light Occluder		Tektronix Part 016-0305-00	
Digital Multimeter (w/test leads)	Accuracy ≤0.01%	Fluke 8842A Digital Multimeter	
Signal Standardizer (2 required)	Tektronix Calibration Fixture with interface connector modi-fied for 11000-series use	TEKTRONIX 067-0587-10 Signal Standardizer	
Plug-in Amplifier (3 required)	0 to 1 GHz bandwidth	TEKTRONIX 11A72 Two-Channel Amplifier	✓ (1 required)

ManualsPlus.com

Table 2-2 — Test Equipment (Cont.)

Description	Minimum Specification	Examples of Applicable Test Equipment	Functional Test
Photometer Probe Extender Cable	42-inch	Tektronix Part 012-0414-02	
Coaxial Cable, 2 ns (5 required)	50 Ω, 18-inch, male BNC connectors	Tektronix Part 012-0076-00	✓ (1 required)
Adapters	BNC female-to-SMA male (3 required)	Tektronix Part 015-1018-00	
	SMA female-to-SMA female (3 required)	Tektronix Part 015-1012-00	
	BNC female-to-BNC female (2 required)	Tektronix Part 103-0028-00	
	BNC male-to-BNC male (2 required)	Tektronix Part 103-0029-00	
Precision 50 Ω Termination	Impedance, 50 Ω; accuracy, within 0.5%; connectors, BNC	Tektronix Part 011-0129-00	
Power Divider, 50 Ω	6 dB load isolation, 50 Ω, SMA connectors	Tektronix Part 015-1014-00	
$5^1/_4$″ diskette	Double-sided, double-density	Maxell MD 2-DD	
Adapter, Probe-Tip to Ground	Used on Probe Bayonet Ground assembly	Tektronix Part 013-0085-00	
Term Conn Link	Shorting strap	Tektronix Part 013-0993-00	
External Loopback Connector	RS-232-C connector	Tektronix Part 013-0198-00	
Alignment Tool (plastic hex)	Plastic hex	Tektronix Part 003-0301-00	
Alignment Tool (insulated slot)	Insulated slot	Tektronix Part 003-0675-01	
Alignment Tool (square-tip ceramic)	Square-Tip (ceramic)	Tektronix Part 003-1400-00	
Magnetic Screwdriver	Holder for Torx tips	Tektronix Part 003-0293-00	
Torx Screwdriver Tips	#10 tip	Tektronix Part 003-0814-00	
	#15 tip	Tektronix Part 003-0966-00	
	#20 tip	Tektronix Part 003-0866-00	

ManualsPlus.com

Table 2-2 — Test Equipment (Cont.)

Description	Minimum Specification	Examples of Applicable Test Equipment	Functional Test
Shorting Strap	Two alligator clips on a short pigtail conductor		
Integrated Circuit Extracting Tool	IC Insertion-Extraction Pliers 28-pin type	General Tool P/N U505BG or equivalent	
Board Removal Tools	Straight-slot screwdriver, large		
	Torx screwdriver. T-7, T-8, T-10, T-15, T-20, T-25		
	Allen (Hex) Wrench, $^1/_{16}$-inch		
	Nutdrivers, $^3/_{16}$", $^1/_4$", $^7/_{16}$"		
Board Removal Tools (cont.)	Needle-nose pliers		
	open-ended wrench, $^1/_4$"		

Using These Procedures

Some parts begin with a setup illustration that shows the test equipment required and the interconnections of this equipment. Refer to Table 2-2, Test Equipment, on the preceding pages for an example of the test equipment appropriate for each part.

Conventions in this Manual

In these procedures, the following conventions are used:

- CAPITAL letters within the body of text identify front panel controls, indicators, and connectors on the DSA (for example, MEASURE) and plug-in.
- **Bold** letters identify menu labels and display messages.
- Initial Capital letters identify connectors, controls, and indicators (for example, On) on associated test equipment.
- In some steps, the first word is italicized to identify a step that contains a performance verification or an adjustment instruction. For example, if *Check* is the first word in the title of a step, an electrical specification is checked. If *Adjust* appears in the title, the step involves an electrical adjustment. If *Examine* is the first word in the title, the step concerns measurement limits that indicate whether the DSA is operating properly; these limits are not to be interpreted as electrical specifications.

ManualsPlus.com

Menu Selections and Measurement Techniques

All menu, knob, and button selections in this section refer to selections on the DSA 601/DSA 602 Digitizing Signal Analyzer unless specified otherwise. Details on measurement techniques and instructions for performing these menu selections are generally not included in this section. Comprehensive descriptions of menus and DSA features are located in the *DSA 601/DSA 602 Installation/User* manual.

Tutorial Manual

The *DSA 601/DSA 602 Digitizing Signal Analyzer Tutorial*, is strongly recommended to familiarize the first-time user with DSA 601/DSA 602 controls and features.

Initializing the DSA

In most of the parts of this section, the first step instructs you to **Initialize** the DSA settings. To **Initialize** the DSA settings, touch the following selectors in the order listed.

- UTILITY button
- **Initialize Setting** in the UTILITY major menu
- **Initialize Setting** in the **Verify Selection** pop-up menu

ManualsPlus.com

Part 1 Power-On Diagnostics

The following part must be performed within the ambient temperature range of +18° and +28°C to ensure proper DSA operation.

Setup to Perform Power-On Diagnostics

DSA 601/DSA 602

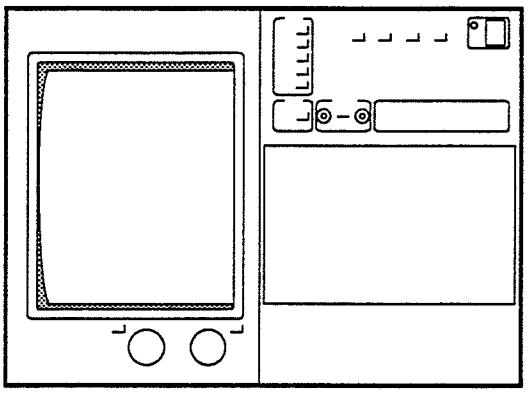

Setup to Perform Power-On Diagnostics

Procedure to Perform Power-On Diagnostics

☐ Step 1: Remove the top and bottom covers from the DSA.

☐ Step 2: With the rear-panel PRINCIPAL POWER SWITCH set to OFF, connect the DSA to a suitable power source.

☐ Step 3: Set the rear panel PRINCIPAL POWER SWITCH to ON and then the front panel ON/STANDBY switch to ON.

When the DSA is first installed, the PRINCIPAL POWER SWITCH should be set to the ON position and remain in this position. Thereafter, use the ON/STANDBY switch to do all power switching.

☐ Step 4: Power on the following test equipment so that it is warmed up with the DSA to be tested (a complete list of test equipment is shown in Table 2-2):

- Digital multimeter
- Function generator
- Calibration generator
- Frequency counter
- Medium frequency sine wave generator
- High frequency sine wave generator
- Time Mark Generator

ManualsPlus.com

Kernel Diagnostics

Each time the ON/STANDBY switch is set to ON, the DSA performs Kernel diagnostics on its microprocessor subsystems and Self-Test diagnostics on all of its major circuits.

CAUTION

Turning the DSA power off during probe calibration, Enhanced Accuracy, or Extended Diagnostics may result in some internal data being corrupted. If corruption occurs, refer to Restoring Data under Diagnostic Troubleshooting in Section 3.

When Kernel diagnostics begin, the messages **Diagnostics in Progress** and **Comm Test in Progress** are displayed on the screen. Diagnostic routines are then performed on each of the DSA's microprocessor subsystems: Display, Executive, and Digitizer. Then, the communication between these subsystems is tested. If the DSA is being powered on from a cold condition, then the diagnostics may be complete before the CRT is warmed-up sufficiently (that is before the CRT is able) to display these messages.

The start of Self-Test diagnostics indicates successful completion of Kernel diagnostics. The message, **Dsy Kernel Failure**, or a beep and illuminated menu button indicators indicates a failure in power-on diagnostics.

Self-Test Diagnostics

When Self-Test diagnostics begin, the message **Self-Test in Progress** is displayed. Flashing and pattern changes on the display indicates test progress. Return to normal operation indicates successful completion of Self-Test Diagnostics. Any failures cause the DSA to execute the remaining tests, and then display the **Extended Diagnostics** menu. Record the displayed error codes for the failed circuit block(s), and then refer to Diagnostic Troubleshooting in Section 3.

Front panel controls are active during the Self-Test diagnostics sequence and any disturbance will cause a test failure. If such a failure occurs, the DSA will automatically enter the Extended Diagnostics mode and display the **Extended Diagnostics** menu. Touch the **Exit** selector to remove the menu and resume normal operation. However, if a fatal Digitizer fault is detected by the diagnostics, exiting the menu to normal operation will not be possible.

Self-Test diagnostics verify the following circuits:

- Executive Control
- Front Panel
- Internal I/O
- External I/O
- Subsystem Communication
- Options
- Display Control
- Video Generator

ManualsPlus.com

- Digitizer Control/Calibration
- Signal Processing
- Acquisition
- Left Plug-in unit
- Center Plug-in unit
- Right Plug-in unit

Completion of Power-On Diagnostics

When the graticule is displayed and the front panel settings in effect at the last power-off are restored, the DSA has passed power-on diagnostics.

New Configuration

When a plug-in unit is first installed in a DSA or when one is moved to a different plug-in compartment, the DSA will be in a new configuration mode. After the DSA performs power-on diagnostics, it performs a partial Enhanced Accuracy for the new configuration. During this partial Enhanced Accuracy, the message **New configuration partial enhance accuracy occurring** will appear at the top of the display. If the operation is successful (as indicated by a message), the DSA will enter the normal operating mode.

ManualsPlus.com

Part 2 Extended Diagnostics

The Extended Diagnostics perform more extensive testing than the Self-Test diagnostics. Extended Diagnostics is designed as a troubleshooting aid for service personnel.

Setup to Invoke Extended Diagnostics

DSA 601/DSA 602

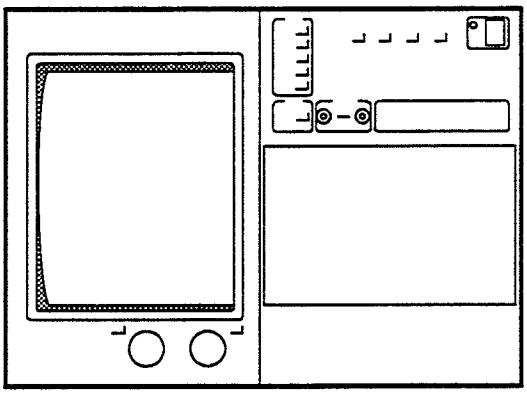

Setup to Invoke Extended Diagnostics

The DSA should have entered the normal operating mode without any diagnostic failures.

Perform the following steps to enter the **EXTENDED DIAGNOSTICS** menu structure and execute the indicated tests. No inputs or I/O cables should be attached to the DSA for these tests.

Procedure to Invoke Extended Diagnostics

Perform the following steps to enter the **EXTENDED DIAGNOSTICS** menu structure and execute the indicated tests.

☐ Step 1: Perform the following settings in the order listed:

DSA 601 or DSA 602
ON/STANDBY switch . . . . . ON

☐ Step 2: Press the UTILITY button, and then touch **Page to Utility 2**.

☐ Step 3: Touch **Extended Diagnostics**.

☐ Step 4: Touch **Extended Diagnostic** in the **Verify Selection** pop-up menu.

☐ Step 5: Touch **All** and then **Run** to start the tests.

☐ Step 6: *Check* that all tests have executed and have a **Pass** status.

ManualsPlus.com

- ☐ Step 7: Touch the following selectors in order:

  External I/O

  Area

  GPIB

  Routine

- ☐ Step 8: Touch **Run** to start the **Intrpt Reset** test.
- ☐ Step 9: Touch **Reset Status** and then **Run** to start the test.
- ☐ Step 10: Touch **Data Lines** and then **Run** to start the test.
- ☐ Step 11: Touch **Interrupt** and then **Run** to start the test.
- ☐ Step 12: *Check* that all four tests executed and passed.
- ☐ Step 13: Touch **Exit** to leave Extended Diagnostics.

ManualsPlus.com

Part 3 Power Supply

This part shows the setup and lists the procedure to check the measured voltage supply, the voltage reference, and the regulator reference (see Figs. 2-1, 2-2, and 2-3).

Measurement Limits

The measurement limits for this part are as follows:

- the measured voltage supply must be within the limits of +4.85 V and +5.25 V
- the voltage reference must be within +5.15 V and +5.25 V
- the regulator reference must be within +9.95 V and +10.05 V

Setup to Examine Voltage Supply

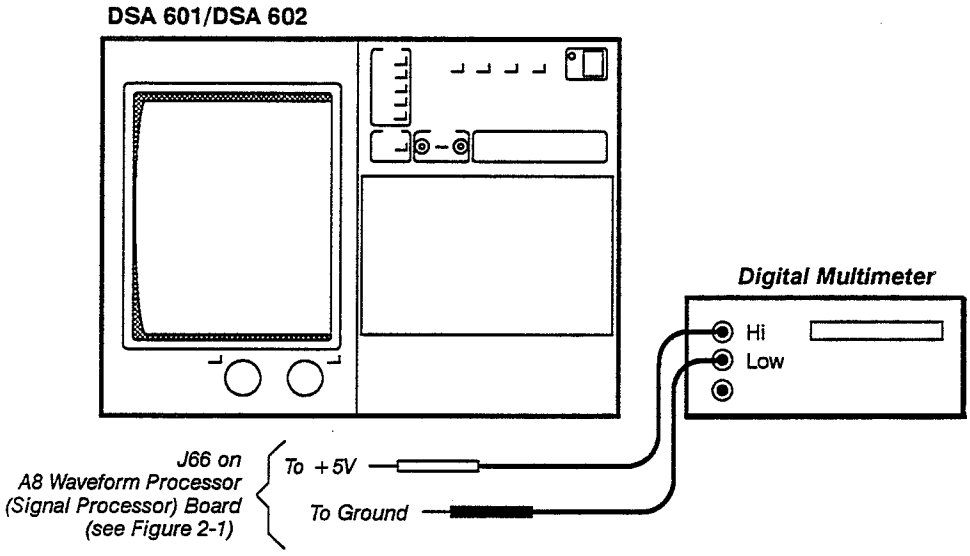

Setup to Examine Voltage Supply

Procedure to Examine Voltage Supply

☐ Step 1: **Initialize** the DSA settings, then perform the following settings in the order listed:

DSA 601 or DSA 602 ..... no settings required
Digital multimeter
Mode ..... DC Voltage

☐ Step 2: *Examine* that the digital multimeter reads within the limits of +4.85 V and +5.25 V.

ManualsPlus.com

STOP

DO NOT attempt to optimize the following adjustment settings if the reading is within the stated limits. Proceed to Part 4, Display.

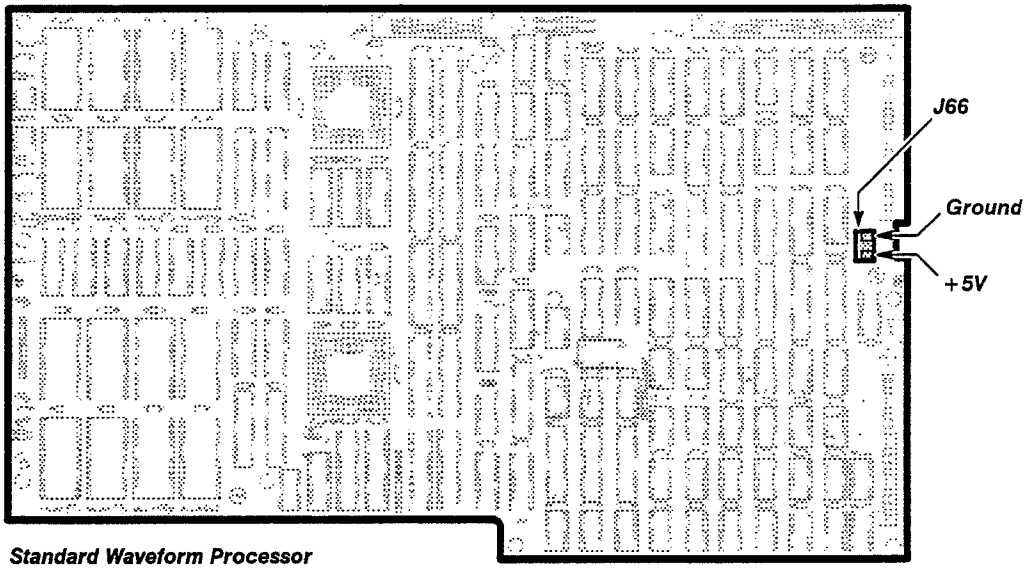

Standard Waveform Processor

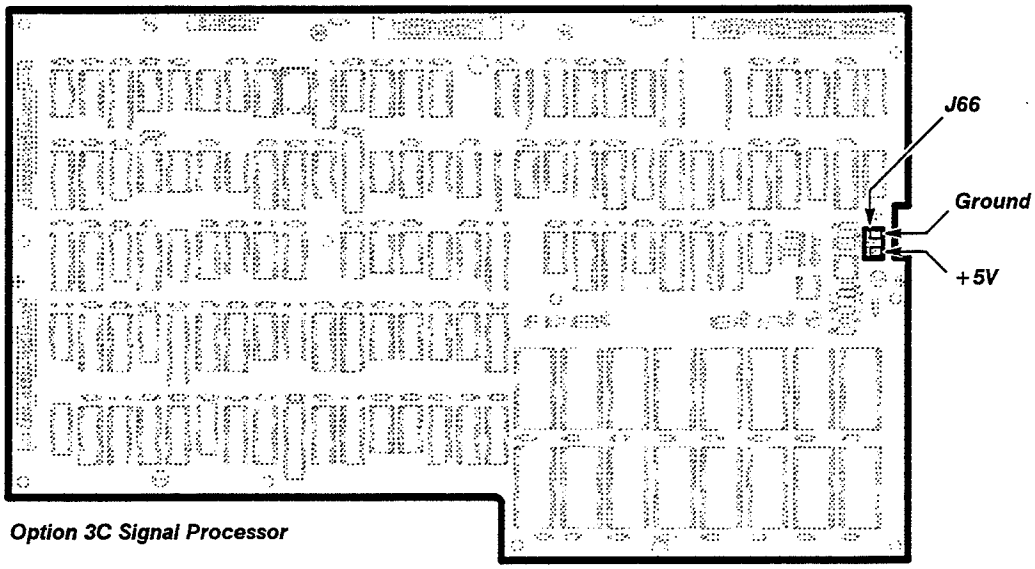

Option 3C Signal Processor

Figure 2-1 *— A8 Waveform Processor (Signal Processor) Board Test Point Locations*

ManualsPlus.com

Setup to Examine/Adjust Voltage Reference

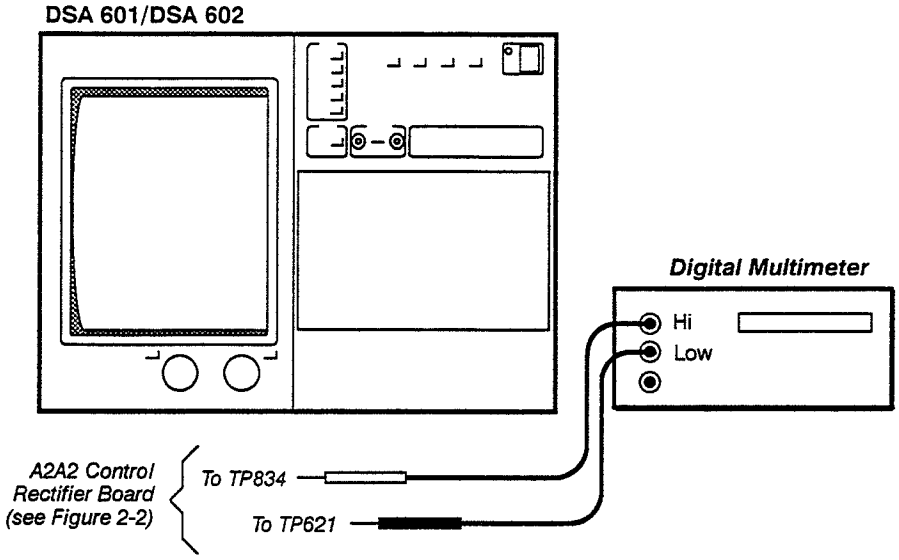

Setup to Examine/Adjust Voltage Reference

Procedure to Examine/Adjust Voltage Reference

☐ Step 1: **Initialize** the DSA settings, then perform the following settings in the order listed:

DSA 601 or DSA 602:

a. Set the front panel ON/STANDBY switch to STANDBY and the rear panel PRINCIPAL POWER SWITCH to OFF. Disconnect the DSA from the power source.

b. Remove the Power Supply module, following the instructions under Power Supply Module Removal in Section 3, Maintenance.

c. Create a short between test points TP631 and TP632 on the A2A2 Control Rectifier board using a shorting strap.

d. Connect the DSA Power Supply module to a suitable line power source.

e. Set the rear panel PRINCIPAL POWER SWITCH to ON.

Digital multimeter

Mode ..... DC Voltage

WARNING *You must use extreme caution when performing the following adjustment.*

☐ Step 2: *Examine* that the digital multimeter reads +5.20 V, within the limits of +5.15 and +5.25 V.

ManualsPlus.com

DO NOT attempt to optimize the the following adjustment, if the reading is within the stated limits. Proceed to Step 4.

- ☐ Step 3: *Adjust* the +5.2 V Ref adjustment R835 on the A2A2 Control Rectifier board for +5.20 V.
- ☐ Step 4: Set the PRINCIPAL POWER SWITCH to OFF.
- ☐ Step 5: Remove the digital multimeter leads from the test points.
- ☐ Step 6: Disconnect the DSA from the power source.
- ☐ Step 7: Remove all test leads and the shorting strap.
- ☐ Step 8: Replace the Power Supply module following the instructions in Section 3, Maintenance.
- ☐ Step 9: Set the PRINCIPAL POWER SWITCH to ON, and the ON/STANDBY switch to ON.

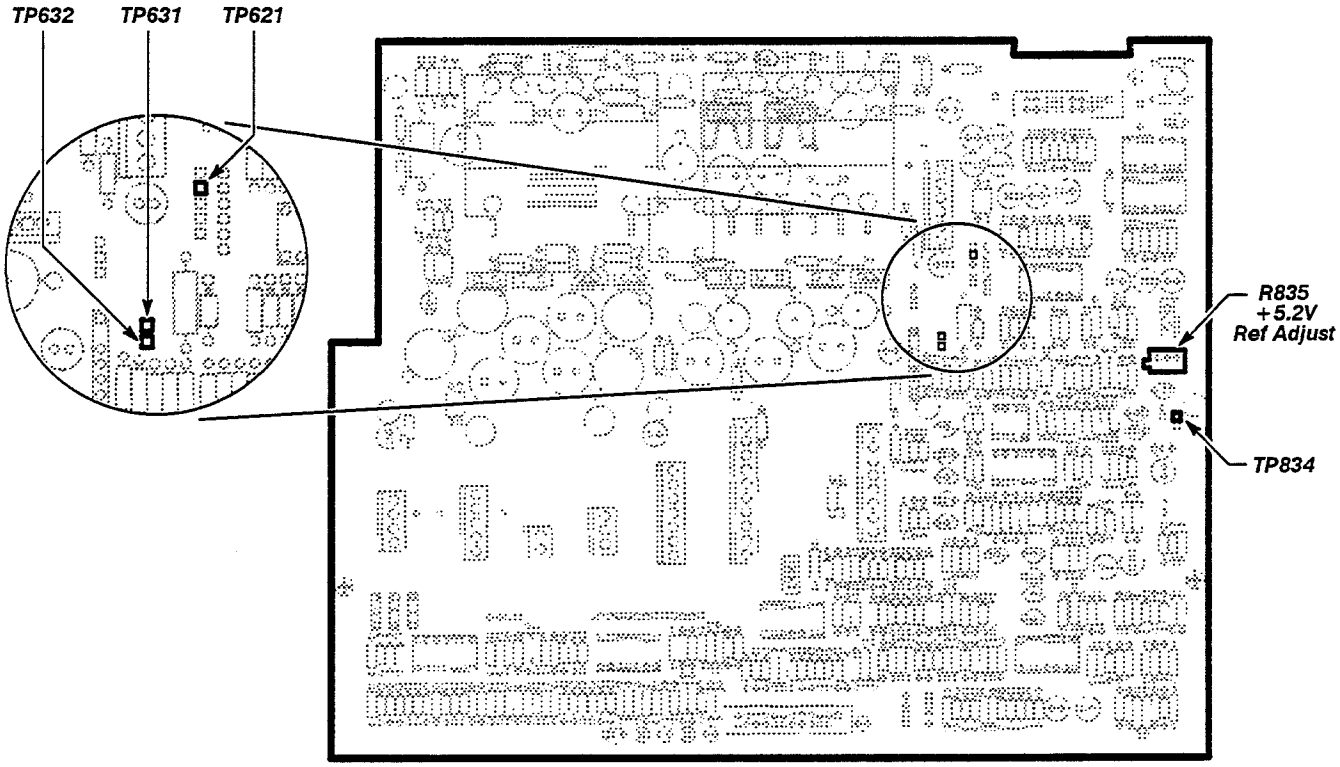

Figure 2-2 *— A2A2 Control Rectifier Board Test Point and Adjustment Locations*

ManualsPlus.com

Setup to Examine/Adjust Regulator Reference

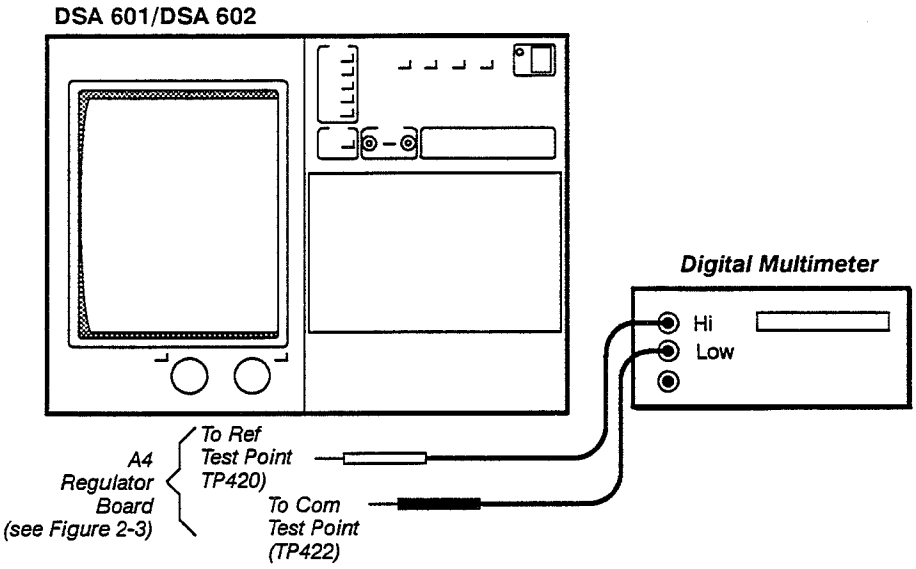

Setup to Examine/Adjust Regulator Reference

Procedure to Examine/Adjust Regulator Reference

☐ Step 1: Perform the following settings in the order listed:

DSA 601 or DSA 602 ..... no settings required
Digital multimeter
Mode ..... DC Voltage

WARNING *You must use extreme caution when performing the following adjustment.*

☐ Step 2: *Examine* that the digital multimeter reads +10.00 V, within the limits of +9.95 V and +10.05 V.

STOP *DO NOT attempt to optimize the adjustment, if the reading is within the stated limits. Proceed to Step 4.*

☐ Step 3: *Adjust* +10 V Ref adjustment R321 on the A4 Regulator board for +10.00 V.

☐ Step 4: Remove the test leads.

☐ Step 5: Repeat Part 1, Power-On Diagnostics.

ManualsPlus.com

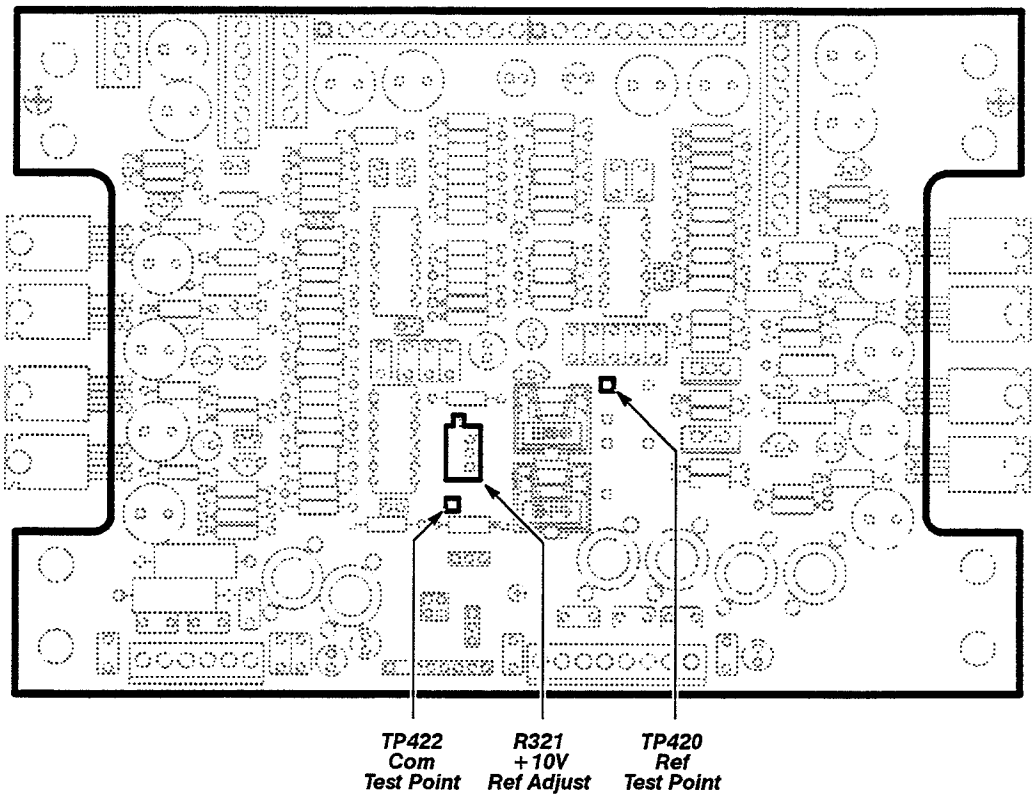

Figure 2-3 — *A4 Regulator Board Test Point and Adjustment Locations*

ManualsPlus.com

Part 4 Display

This part shows the setup and lists the procedure to Examine/Adjust the A24 CRT Driver board (See Figs. 2-4, 2-5, 2-6 and 3-4).

STOP

The adjustments in this part only affect the visual aspects of the CRT display. The adjustments in this part do not affect DSA accuracy since all measurements are made on the acquired data, not the displayed data. Unless alignment or brightness difficulties are apparent, proceed to Part 5, Low Frequency Square Wave Level.

If you have replaced the CRT or A24 CRT Driver board, and visual problems are apparent, then you may have to perform all of the adjustments in this part. If you have replaced the A26 Geometry board or A27 CRT Socket board, then you may have to perform only the adjustments that are located on that board.

Measurement Limits

The measurement limits are set on the CRT as follows:

- A voltage difference of 24.25 V ±0.25 V between TP761 and TP760.
- Vertical size must be within ±0.050 inch of tic marks on the edges of the front panel bezel.
- Horizontal size and linearity must be: within ±0.050 inch of the tic marks on the top and bottom edges of the front panel bezel, and the grid boxes must be uniform in length.
- Horizontal tilt, pin cushion, right amplitude, left amplitude, and apex point adjustments are adjusted for optimum grid geometry.
- Convergence of red, green, and blue colors within one line width at the edges of the display.
- Red, Green, and Blue background adjustments must be adjusted for a proper color balance (gray background).
- Red gain is adjusted to 16.2 ±0.5 foot lamberts.
- Green gain is adjusted to 43.3 ±1.3 foot lamberts.
- Blue gain is adjusted to 6.9 ±0.2 foot lamberts.

ManualsPlus.com

Setup to Examine/Adjust the Display

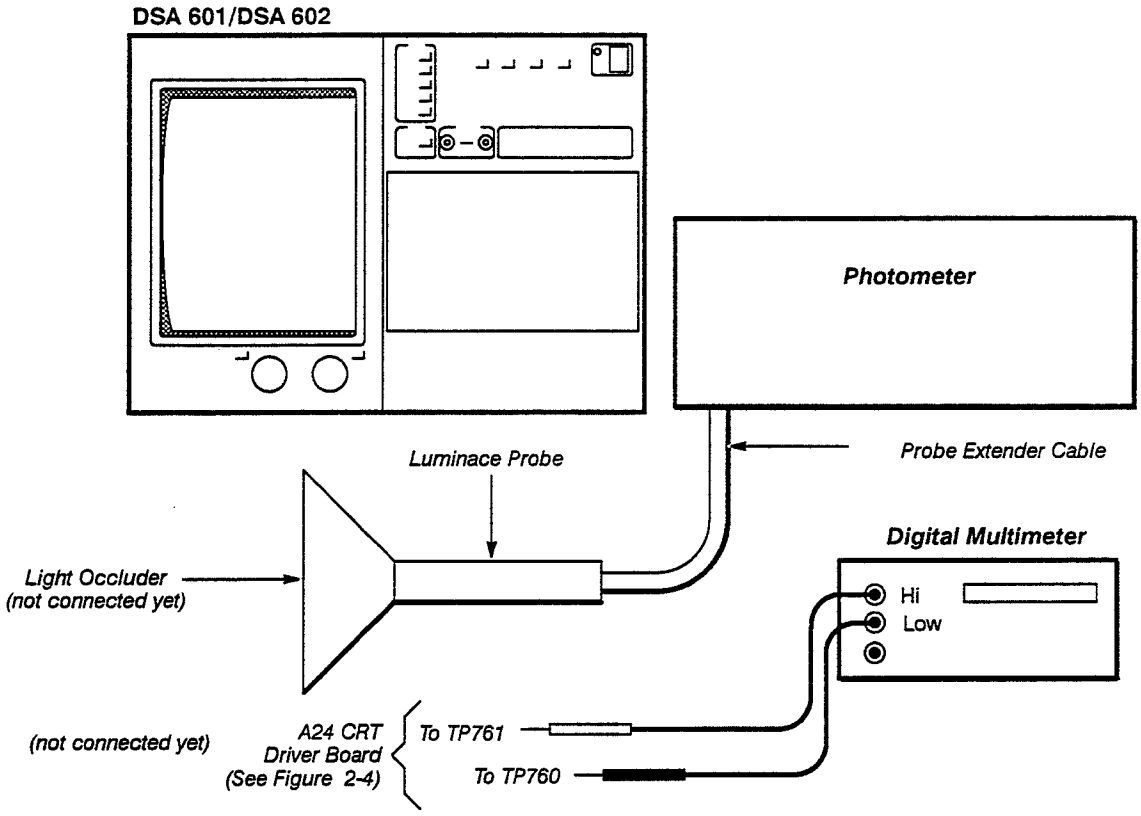

Setup to Examine/Adjust the Display

WARNING *You must use extreme caution when performing the following adjustments.*

Procedure to Examine/Adjust the Display

☐ Step 1: Perform the following settings in the order listed:

DSA 601 or DSA 602
ON/STANDBY switch ..... STANDBY
Digital multimeter
Mode ..... DC Voltage
Photometer ..... no settings required

☐ Step 2: Set the DSA so that the left side is facing upwards.

☐ Step 3: Remove the left side decorative trim covers, left side frame section, and the five Torx head screws that secure the trap door located beneath the A24 CRT Driver board (refer to Section 3, Corrective Maintenance, Steps 2 through 5 under A24 CRT Driver Board for specific instructions on removing the preceeding items).

ManualsPlus.com

- ☐ Step 4: Carefully set the DSA in the upright position and place a hard cover book (or similar object) under the right, front of the DSA. This will prop up the front of the DSA so that you can access the A24 CRT Driver board.
- ☐ Step 5: Remove the eight screws securing the platform, and then raise the platform on it's hinges.
- ☐ Step 6: Secure the platform with the support rod.
- ☐ Step 7: Remove the ten screws in the CRT protector shield, and then remove the shield.
- ☐ Step 8: Connect the digital multimeter (DMM) to TP760 and TP761 on the A24 CRT Driver board.

CAUTION

Do not short together the test points TP760 and TP761 when connecting the digital multimeter to these test points. Shorting the test points together will blow fuse F660 on the A24 CRT Driver board.

- ☐ Step 9: Set the ON/STANDBY switch to ON.
- ☐ Step 10: *Examine* that the DMM reading is between 24.0 V and 24.5 V.

STOP

Do not attempt to optimize the adjustment if the reading is within the stated limits. Proceed to Step 12.

- ☐ Step 11: *Adjust* the Vert Size adjustment R700 on the A26 Geometry board so that the DMM reads approximately 24.25 V.
- ☐ Step 12: *Adjust* the Grid adjustment R113 on the A27 CRT Socket board clockwise until the raster appears, then turn the adjustments counterclockwise until the raster lines just disappear.
- ☐ Step 13: Press the UTILITY button.
- ☐ Step 14: Touch **Page to Utility 2** in the UTILITY major menu.
- ☐ Step 15: Touch **Extended Diagnostics** in the UTILITY major menu, and then **Extended Diagnostic** in the **Verify Selection** pop-up menu.
- ☐ Step 16: Touch **Front Panel** in the **Extended Diagnostics** pop-up menu.
- ☐ Step 17: Touch **Area** and then **Test Pattern**.
- ☐ Step 18: Touch **Routine** and then **Green Grid**.
- ☐ Step 19: Touch **Run** (a grid pattern will fill the display area).
- ☐ Step 20: *Adjust* Horiz Hold adjustment R962 on the A24 CRT Driver board if the display is unsynchronized. Adjust R962 counter-clockwise until the display stabilizes, and then turn the adjustment another one-quarter turn counter-clockwise.

ManualsPlus.com

☐ Step 21: Set the following adjustments before performing the rest of this part:

- Set Left Ampl R200, Apex Point R300, and Right Ampl R400 on the A26 Geometry board to their midrange settings.
- Set the Pin Cushion R500 adjustment on the A26 Geometry board so that the green grid has a flat top line.
- Set the HV Reg R865 adjustment on the A24 CRT Driver board one quarter turn clockwise past its midrange setting.

☐ Step 22: *Examine* that the grid is aligned with the tic marks along the inside vertical edge of the front panel bezel. There are two indexes along each side; one at the top and one at the bottom of the front panel bezel. To eliminate any parallax error, look directly at the center of the CRT and then move your eyes (do not move your head) to align the top of the grid with the top tic mark, and the bottom of the grid with the bottom tic mark. The grid may be .050 inches larger than tic marks at the top and bottom of the front panel bezel.

STOP

DO NOT attempt to optimize the adjustments if the grid is aligned within the stated limits. Proceed to Step 24.

☐ Step 23: *Adjust* Vert Hold adjustment R760 and Vert Size adjustment L750 on the A24 CRT Driver board to align the grid with the index bumps along the inside vertical edge of the front panel bezel; within ±0.05 inches.

☐ Step 24: *Examine* that the grid is aligned with the horizontal tic marks at the top and bottom of the front panel bezel, and the grid boxes are of uniform length. The grid may be .050 inches larger than the tic marks at the left and right of the front panel bezel.

STOP

DO NOT attempt to optimize the adjustments if the grid is aligned within the stated limits. Proceed to Step 26.

☐ Step 25: *Adjust* Horiz Lin adjustment R961, Horiz Size adjustment R867, and Horiz Pos adjustment R866 on the A24 CRT Driver board for optimum overall linearity and position. Use the horizontal indexes along the top and bottom of the front panel bezel to align the grid within 0.05 inches of the tic marks by the same method used in Step 22.

☐ Step 26: R867 Horiz Size, Horiz Lin R961, and Horiz Pos R866 interact and therefore you may need to repeat Step 25 until R867, R961, and R866 are adjusted properly.

☐ Step 27: *Adjust* the Horiz Tilt adjustment R800 on the A26 Geometry board so that the center, horizontal line is level. Use the index bumps along the two sides of the CRT to perform the adjustment.

☐ Step 28: *Adjust* the Pin Cushion adjustment R500 on the A26 Geometry board so that the horizontal lines are as straight as the adjustment allows.

☐ Step 29: *Adjust* the Right Ampl adjustment R400 on the A26 Geometry board to straighten out the horizontal lines on the right side of the display.

ManualsPlus.com

- ☐ Step 30: *Adjust* the Left Ampl adjustment R200 on the A26 Geometry board to straighten out the horizontal lines on the left side of the display.
- ☐ Step 31: *Adjust* the Apex Point adjustment R300 on the A26 Geometry board to correct for any non-linearity between the left and right side adjustments.
- ☐ Step 32: *Examine* that all of the interactive adjustments performed in Steps 23 through 31 produce a grid with optimum geometry. If any of the measurements or adjustments performed in steps 23 through 31 are not within the stated limits, then perform Steps 23 through 31 again.
- ☐ Step 33: Touch **Exit** to remove the pattern from the screen.
- ☐ Step 34: Touch **White Grid** in the **Routine** pop-up menu.
- ☐ Step 35: Touch **Run** at the bottom of the screen.
- ☐ Step 36: *Examine* that any separation of colors from the main grid pattern is less than one line width at the edges of the display.

STOP

DO NOT attempt to optimize the following adjustment if the display is within the stated limits. Proceed to Step 38.

- ☐ Step 37: *Adjust* the Convergence adjustment R102 on the A27 CRT Socket board for the best convergence of colors over the entire display area.

  Note: *Convergence adjustment R102, adjusts the vertical convergence; if the horizontal convergence is not set properly then adjust the Horizontal Convergence adjustment located on the left side of the CRT yoke (see Fig. 3-4).*

- ☐ Step 38: *Adjust* Grid adjustment R113 clockwise on the A27 CRT Socket board until the raster lines just appear.
- ☐ Step 39: *Adjust* the Red, Green, and Blue Background adjustments; R100, R110, and R111 respectively, on the A24 CRT Driver board fully counter-clockwise.
- ☐ Step 40: *Examine* that the background color is gray. If the background color is not grey, note which color(s) (red, green, or blue) appear more prominent.
- ☐ Step 41: *Adjust* the Red, Green, or Blue Background adjustment; R100, R110, and R111 respectively, on the A24 CRT Driver board so that the background color is grey. Only adjust the background colors that appear not to be prominent. That is, if the background color appears to be red, then adjust the Green and Blue Background adjustments.
- ☐ Step 42: *Adjust* the Grid adjustment R113 until the raster lines just disappear and the black background appears.
- ☐ Step 43: Touch **Exit** once to remove the grid pattern.
- ☐ Step 44: Touch **Red Display** in the **Routine** pop-up menu (refer to Table 2-3, Illuminance Levels, for the correct selector in the **Routine** pop-up menu for successive tests).

ManualsPlus.com

- ☐ Step 45: Touch **Run** at the bottom of the screen.
- ☐ Step 46: Place the light occluder on the face plate of the CRT.
- ☐ Step 47: *Examine* that the photometer reads within the limits stated for each display listed in Table 2-3.

STOP

DO NOT attempt to optimize the following adjustments if the reading is within the stated limits. Proceed to Step 49.

- ☐ Step 48: *Adjust* the appropriate color adjustment on the A24 CRT Driver board to its respective adjustment limits (refer to Table 2-3).

***Table 2-3** — Illuminance Levels*

Routine pop-up menu selector (step 44)	Examine limits (step 47)	Adjustment indicator (step 48)	Adjust limit (step 48)
Red Display	16.2 ±1.62 Foot Lamberts	Red Gain (R200)	16.2 Foot Lamberts
Green Display	43.3 ±4.33 Foot Lamberts	Green Gain (R210)	43.3 Foot Lamberts
Blue Display	6.9 ±0.69 Foot Lamberts	Blue Gain (R220)	6.9 Foot Lamberts

- ☐ Step 49: Touch **Exit** and repeat Steps 44 through 48 for the remaining **Routine** pop-up menu selectors listed in Table 2-3.
- ☐ Step 50: Touch **HV Reg Dsply** in the Routine pop-up menu.
- ☐ Step 51: Touch **Run** at the bottom of the display.
- ☐ Step 52: *Adjust* the HV Reg adjustment R865 on the A24 CRT Driver board for the minimum movement of the top right corner of the border pattern.
- ☐ Step 53: Touch **Exit** to remove the pattern from the screen.
- ☐ Step 54: Touch **Green Grid** in the **Routine** pop-up menu.
- ☐ Step 55: Touch **Run** at the bottom of the display.
- ☐ Step 56: *Examine* that the vertical size, vertical position, horizontal size and horizontal linearity of the green grid pattern are still within the previously stated limits. If they are not within the stated limits then repeat Steps 23 through 26.
- ☐ Step 57: *Adjust* the Focus adjustment R111 on the A27 CRT Socket board for the minimum vertical line width.
- ☐ Step 58: Reinstall the trap door, the left-side frame section, the left-side decorative trim covers, and the CRT cover.

ManualsPlus.com

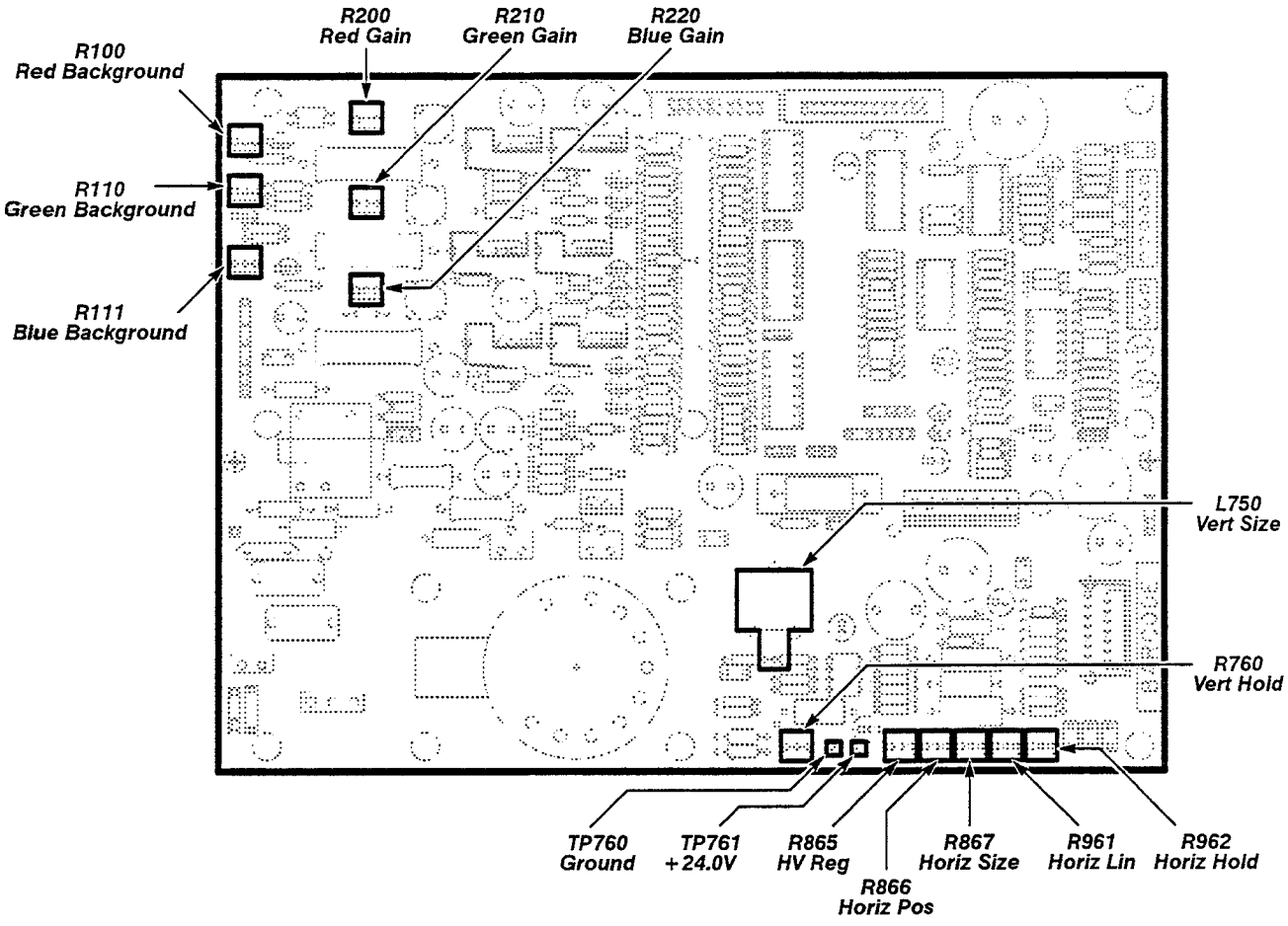

Figure 2-4 — *A24 CRT Driver Board Test Point and Adjustment Locations*

ManualsPlus.com

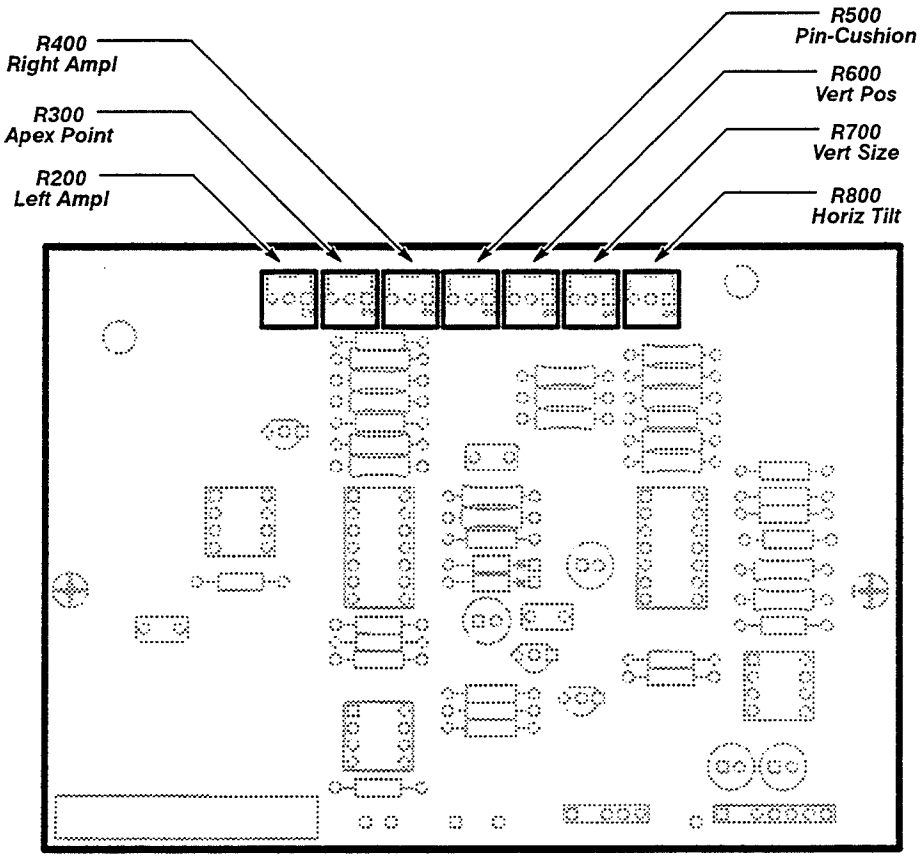

Figure 2-5 — *A26 Geometry Board Adjustment Locations*

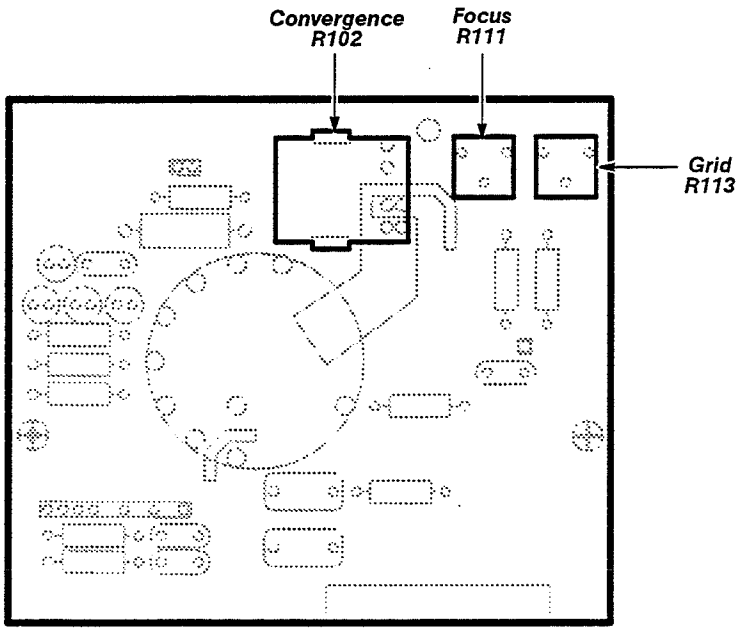

Figure 2-6 — *A27 CRT Socket Board Adjustment Locations*

ManualsPlus.com

Part 5 Low Frequency Square Wave

This part shows the setup and lists the procedures to check the low frequency square wave level.

Specification

The low frequency square wave level must be 500 mV ±15 mV into a 50 Ω load.

Measurement Limit

The frequency of the low frequency square wave must be approximately 1 kHz.

Setup to Check/Examine Low Frequency Square Wave

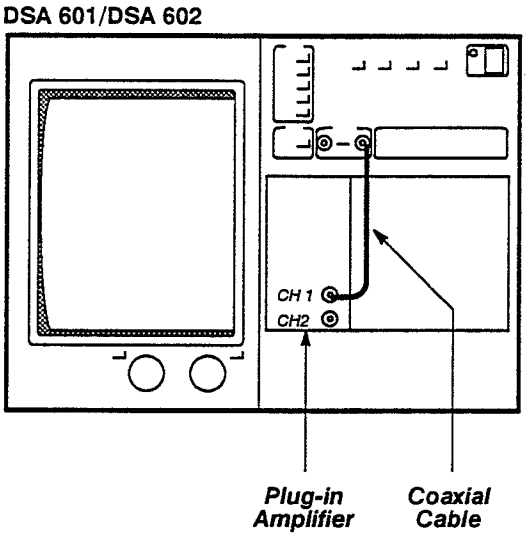

Setup to Check/Examine Low Frequency Square Wave

Procedure to Check/Examine Low Frequency Square Wave

☐ Step 1: **Initialize** the DSA settings, then perform the following settings in the order listed.

Left plug-in amplifier
- CH1 display on/off ..... on

DSA 601 or DSA 602
- **Vert Size: L1** ..... 100 mV/div
- **Vert Offset: L1** ..... 300 mV
- **Main Size** ..... 200 µs/div
- UTILITY button ..... press
  - **Calibrator Output** ..... touch
    - **Frequency** ..... 1 kHz
- TRIGGER button ..... press
  - **Level** ..... 200 mV

ManualsPlus.com

WAVEFORM button . . . . . press
Acquire Desc . . . . . touch
Average N . . . . . **On**
MEASURE button . . . . . press
Measurements . . . . . **Peak-Peak**
. . . . . **Frequency**

☐ Step 2: *Check* that the **Peak-Peak** reading is 500 mV ±15 mV.

☐ Step 3: *Examine* that the **Frequency** reading is 1 kHz ±1%.

ManualsPlus.com

Part 6 Calibrator DC Level Accuracy

This part shows the setup and lists the procedure to examine and adjust the calibrator DC level accuracy (see Fig. 2-7).

Measurement Limits

The measurement limits for this part are as follows:

- The Extended Diagnostics **Cal_Ref High** routine into a 1 MΩ load must yield a calibrator output of 9.995 V ±10 mV.
- The Extended Diagnostics **Cal_Ref Low** routine into a 1 MΩ load must yield a calibrator output of −10.000 V ±10 mV.
- The Extended Diagnostics **Cal_Ref High** routine into a 50 Ω load must yield a calibrator output of 1.000 V + (+6 mV or −7 mV).
- The Extended Diagnostics **Cal_Ref Low** routine into a 50 Ω load must yield a calibrator output of −1.000 V ±6 mV.

Setup to Examine/Adjust Calibrator DC Level Accuracy

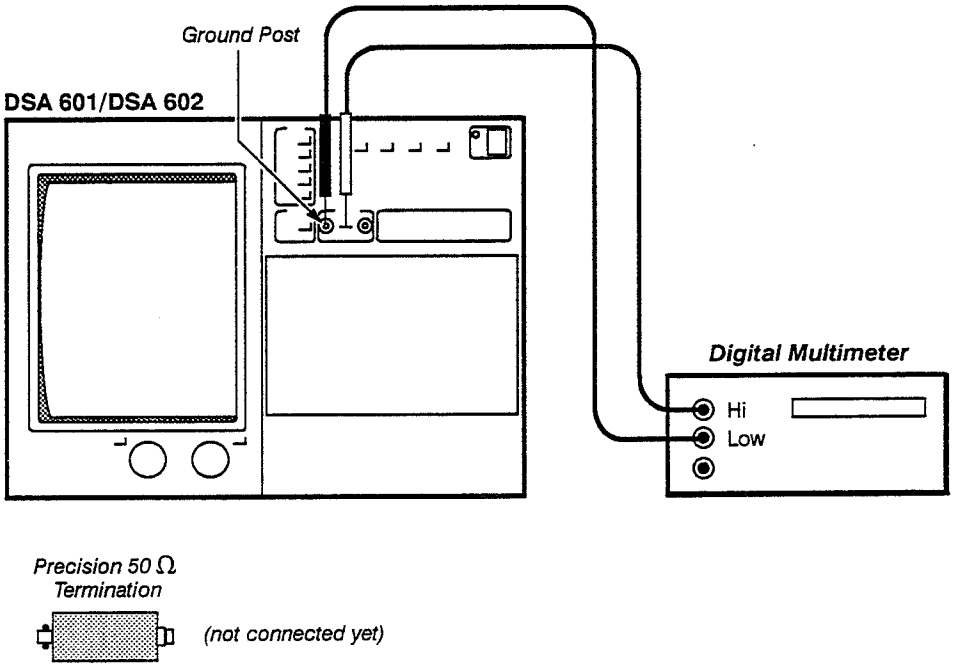

Setup to Examine/Adjust Calibrator DC Level Accuracy

Procedure to Examine/Adjust Calibrator DC Level Accuracy

☐ Step 1: **Initialize** the DSA settings, then perform the following settings in the order listed.

DSA 601 or DSA 602

UTILITY button ..... press

Page to Utility 2 ..... touch

ManualsPlus.com

Extended Diagnostics ..... touch
Verify Selection ..... **Extended Diagnostics**
Block ..... **Dig Cntl/Cal**
Area ..... **Refs Adjust**
Routine ..... **Cal_Ref High**
Run ..... touch
Digital multimeter
set to measure ..... 10 V DC

☐ Step 2: *Examine* that the digital mulitimeter (DMM) reads between 9.985 V and 10.005 V.

☐ Step 3: Touch **Exit** to return to Extended Diagnostics.

☐ Step 4: Touch **Cal_Ref Low** in the **Routine** pop-up menu and then **Run** at the bottom of the screen.

☐ Step 5: *Examine* that the DMM reads between −9.990 V and −10.010 V.

☐ Step 6: Touch **Exit** to return to Extended Diagnostics.

STOP

DO NOT attempt to adjustments if the readings are within the stated limits. Proceed to Step 8.

☐ Step 7: *Adjust* the Gain and Offset adjustments, R238 and R237 respectively, on the A5 Calibrator board so that the values measured in steps 4 and 6 are 9.995 V ± 0.001 V and −10.000 V ± 0.001 V respectively (see Figure 2-7).

☐ Step 8: Connect the precision 50 Ω termination to the Calibrator BNC output connector on the DSA.

☐ Step 9: Connect the DMM lead to the center conductor of the 50 Ω termination.

☐ Step 10: Touch **Cal_Ref High** in the **Routine** pop-up menu and then **Run** at the bottom of the screen.

☐ Step 11: *Examine* that the DMM reads between 0.993 V and 1.006 V.

☐ Step 12: Touch **Exit** to return to Extended Diagnostics.

☐ Step 13: Touch **Cal_Ref Low** in the Routine pop-up menu and then **Run** at the bottom of the screen.

☐ Step 14: *Examine* that the DMM reads between −0.994 V and −1.006 V.

ManualsPlus.com

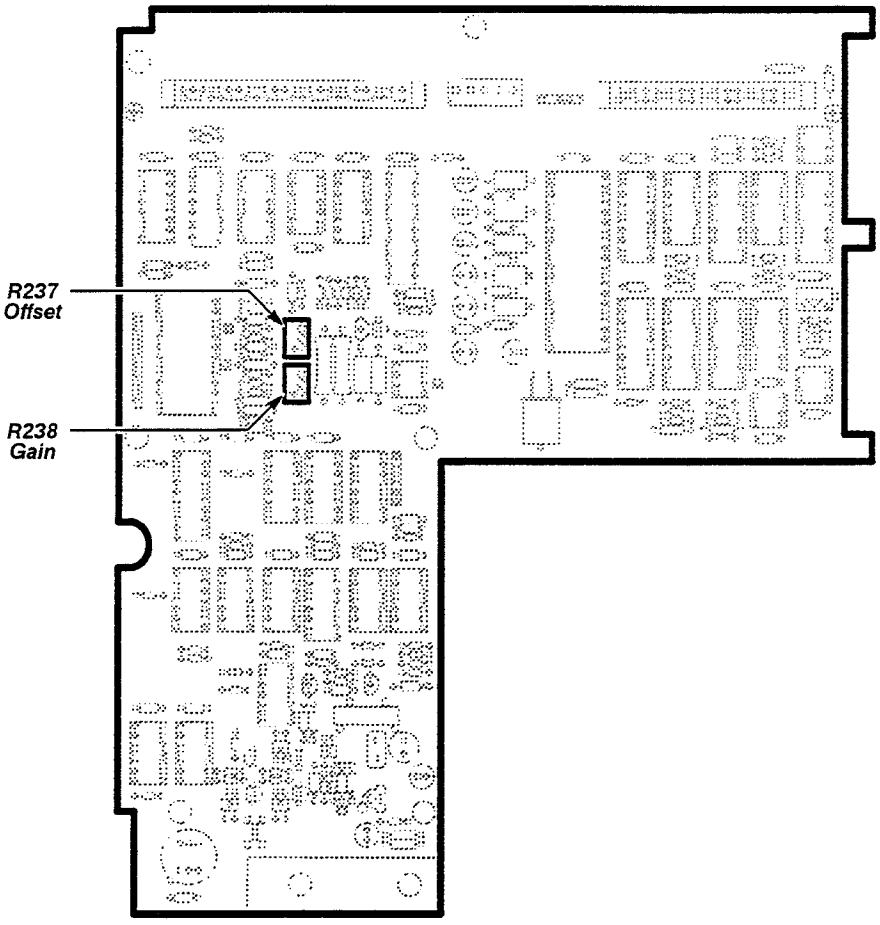

Figure 2-7 — A5 Calibrator Board Adjustment Locations

ManualsPlus.com

Part 7 Input/Output

In this part, the temperature sensor voltage and voltage reference is measured with a digital multimeter (see Figs. 2-8 and 3-5).

Measurement Limits

Temperature sensor voltage reference +6.500 V, ±5 mV.

Setup to Examine/Adjust Temperature Sensor Voltage Reference

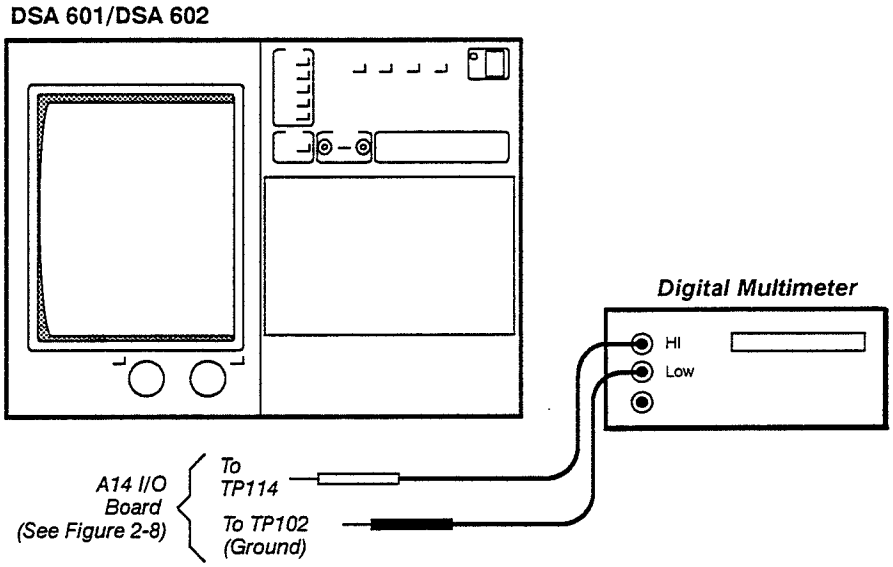

Setup to Examine/Adjust Temperature Sensor Voltage Reference

Procedure to Examine/Adjust Temperature Sensor Voltage Reference

☐ Step 1: Perform the following in the order listed:

DSA 601 or DSA 602

a. Set the front panel ON/STANDBY switch to STANDBY.

b. Remove the eight Torx head screws that secure the platform to the chassis (see Fig. 3-5).

c. Raise the platform on its hinges, and then secure the platform with the kickstand.

d. Remove both plastic retaining strips from top of card cage.

e. Connect the digital multimeter to test points TP114 and TP102 on the A14 I/O board.

Note: *If you cannot access the test points due to interference from the ribbon cables, then disconnect the necessary ribbon cables, connect the 10X Probe to the test points, and then reconnect the ribbon cables. The ribbon cables must be properly connected to perform the remainder of this part.*

ManualsPlus.com

f. Set the front-panel ON/STANDBY switch to ON.

Digital multimeter
Mode . . . . . DC Voltage

☐ Step 2: *Examine* that the Digital multimeter reads within the limits +6.505 V and +6.495 V.

STOP

DO NOT attempt to optimize following adjustment setting if the digital voltmeter reading is within the stated limits. Proceed to Step 4.

☐ Step 3: *Adjust* the Temp Sensor Voltage Ref adjustment R112 for +6.500 V.

☐ Step 4: Set the front panel ON/STANDBY switch to STANDBY.

☐ Step 5: Replace the plastic retaining strips.

☐ Step 6: Lower the platform, and secure with the eight Torx head screws.

☐ Step 7: Set the ON/STANDBY to ON.

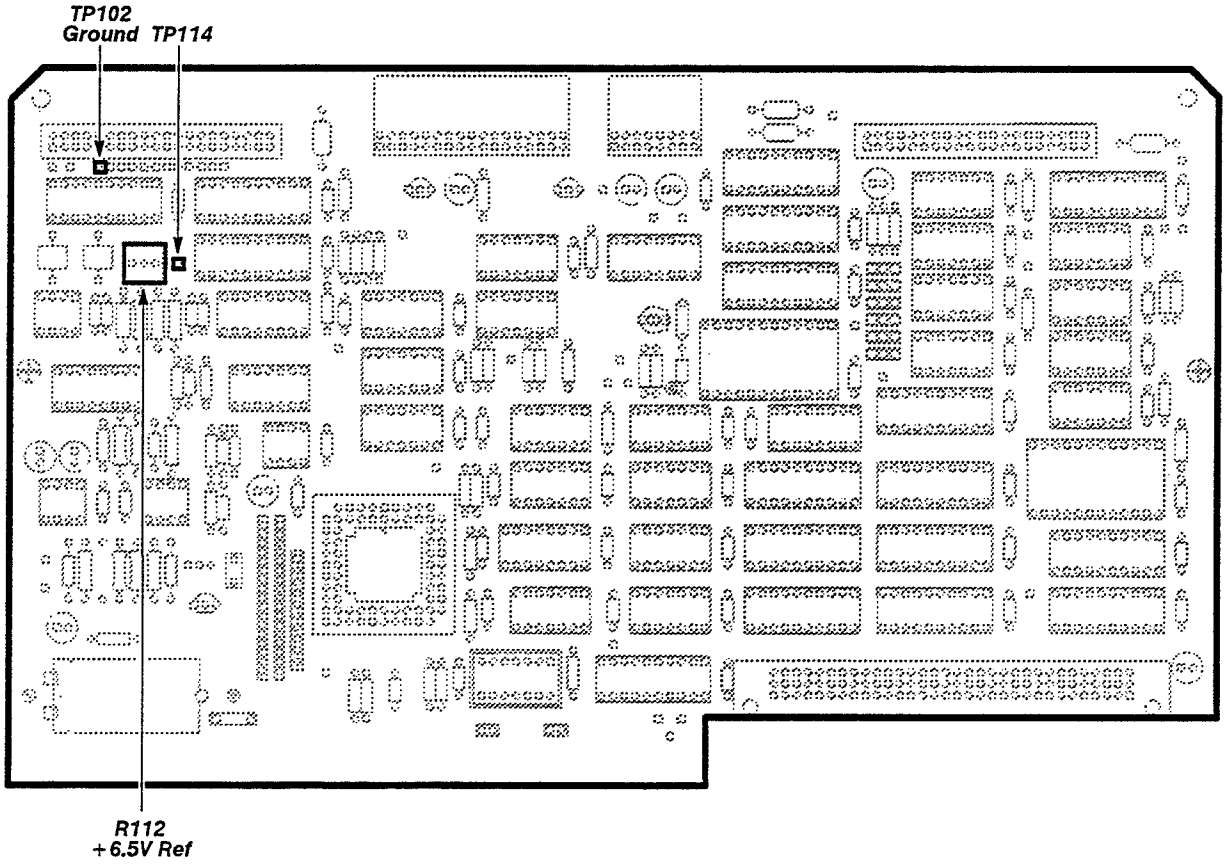

Figure 2-8 — A14 I/O Board (Temperature Sensor) Test Point and Adjustment Locations

ManualsPlus.com

Part 8 ACVS Gain

This part shows the setup and lists the procedure to examine and adjust the ACVS gain (see Figs. 2-9 and 2-10).

Measurement Limit

The voltage difference between TP400 in its high state and TP400 in its low state must be 2.715 V ±500 µV.

Setup to Examine/Adjust ACVS Gain

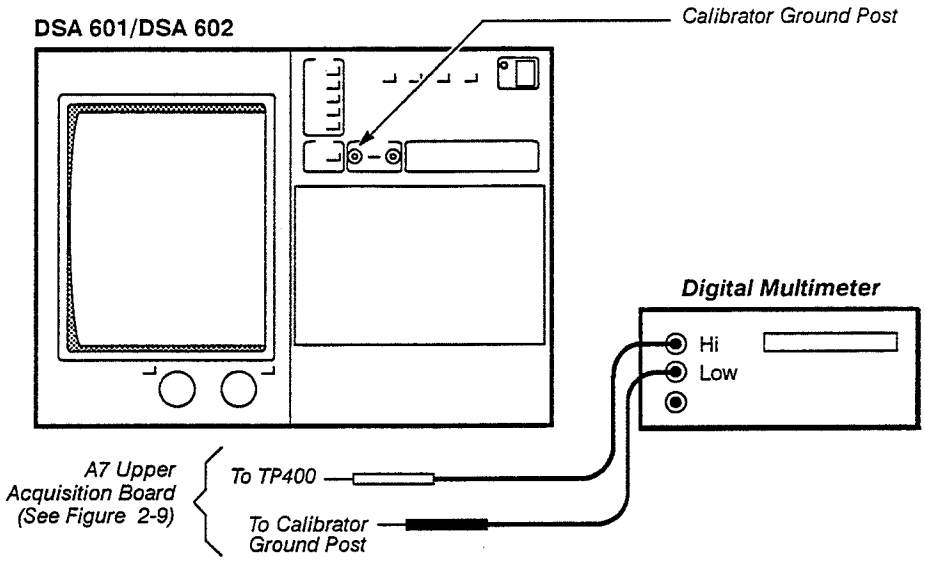

Setup to Examine/Adjust ACVS Gain

Procedure to Examine/Adjust ACVS Gain

☐ Step 1: Perform the following settings in the order listed.

DSA 601 or DSA 602

UTILITY button ..... press
Page to Utility 2 ..... touch
Extended Diagnostics ..... touch
Verify Selection ..... **Extended Diagnostic**
Block ..... **Dig Cntl/Cal**
Area ..... **Refs Adjust**
Routine **TP400H, 401L**
Run ..... touch

☐ Step 2: Read and record the digital multimeters reading as V_2 for later use

☐ Step 3: Touch **Exit** to return to the **EXTENDED DIAGNOSTICS** menu structure.

ManualsPlus.com

- ☐ Step 4: Touch **TP400L, 401H** in the **Routine** pop-up menu, and then touch **Run**.
- ☐ Step 5: Read and record the digital multimeters reading as V_5 for later use.
- ☐ Step 6: *Examine* that $V_2 - V_5$ is 2.715 V $\pm$500 μV.

STOP

DO NOT attempt to optimize the following adjustment if the measurement is within the stated limits. Proceed to Step 8.

- ☐ Step 7: *Adjust* the ACVS Gain adjustment R723 on the A5 Calibrator board so that $V_2 - V_5$ is 2.715 V $\pm$500 μV.
- ☐ Step 8: Touch **Exit**, then touch **Exit** twice to leave the **EXTENDED DIAGNOSTICS** menu structure.

ManualsPlus.com

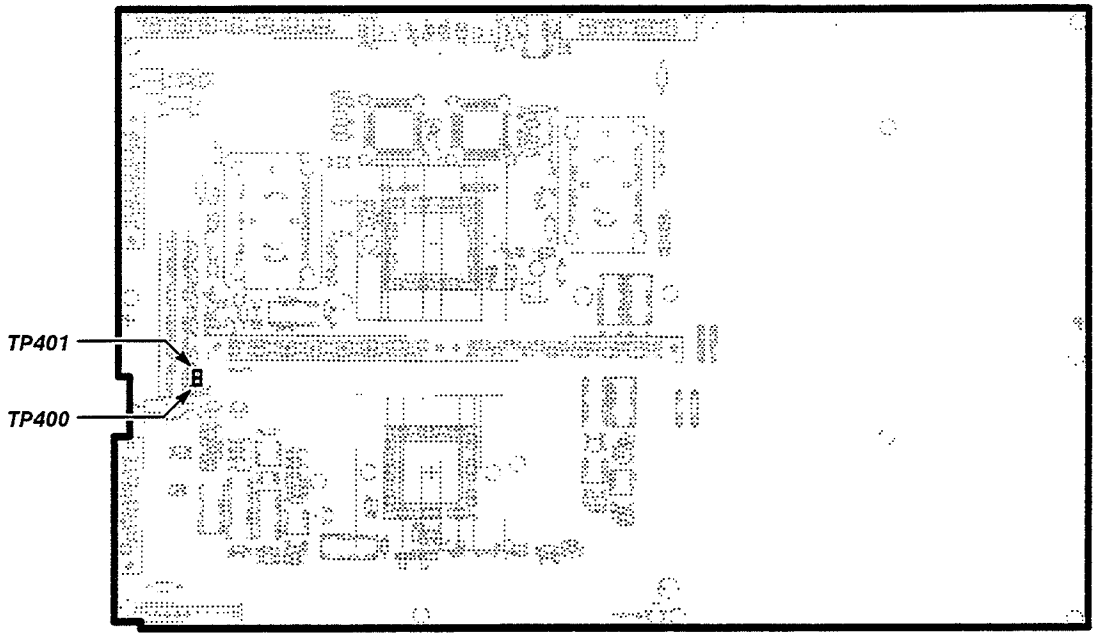

DSA 601

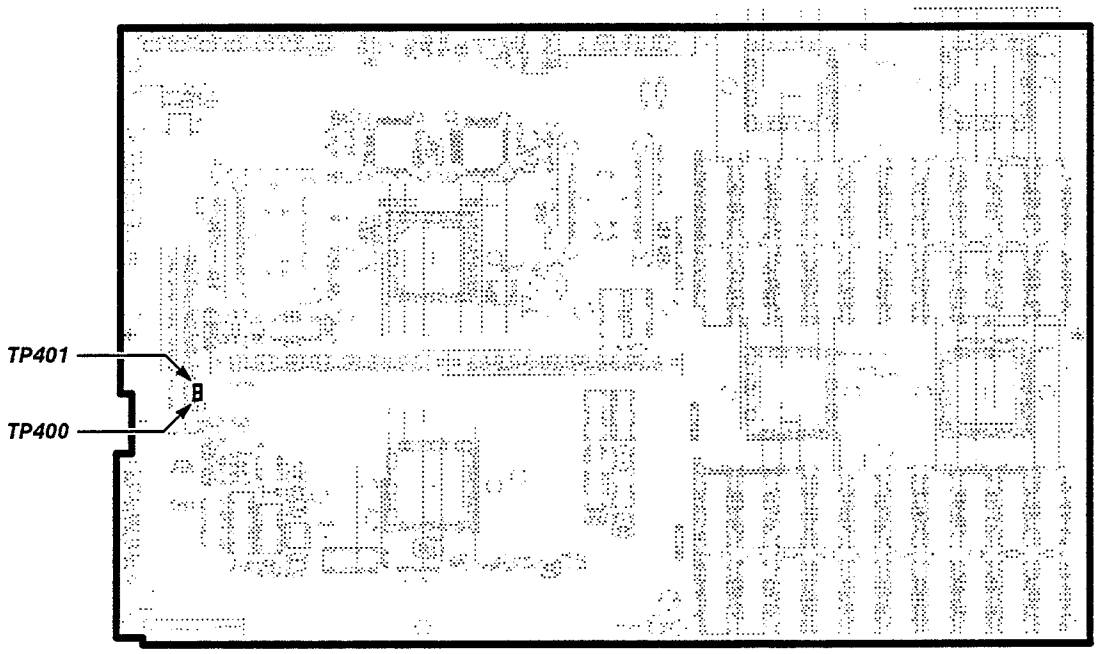

DSA 602

Figure 2-9 — *A7 Upper Acquisition Board Test Point Locations*

ManualsPlus.com

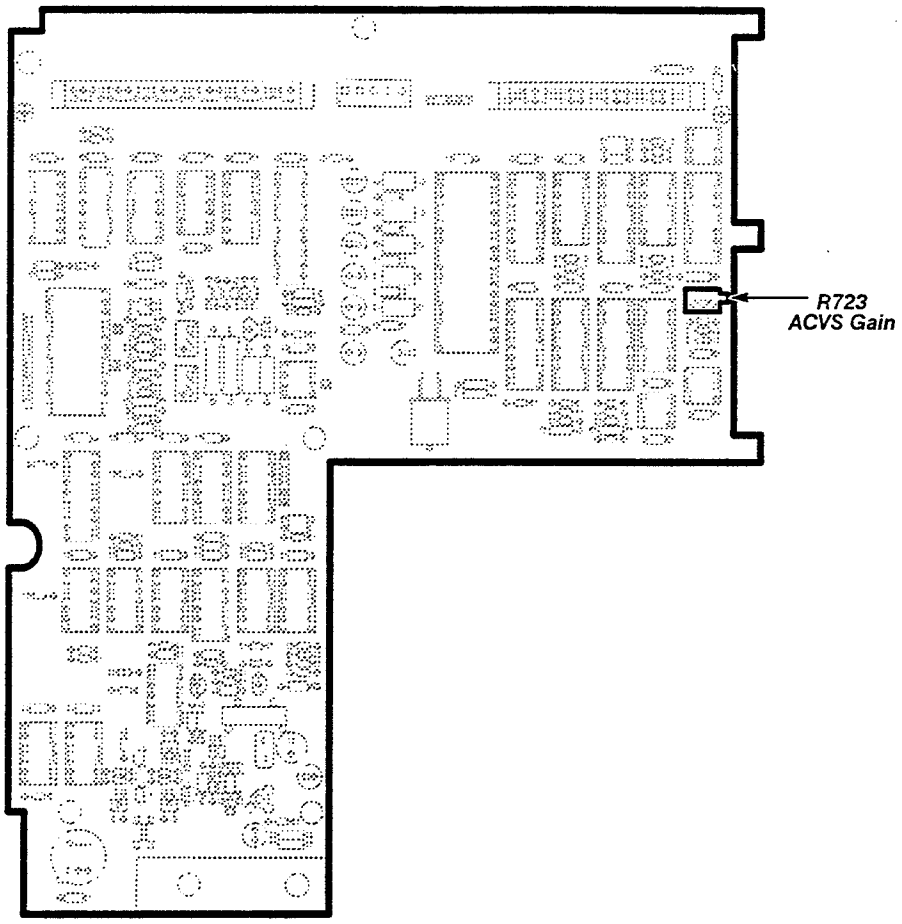

Figure 2-10 — A5 Calibrator Board Adjustment Location

ManualsPlus.com

Part 9
Field Calibration

This part provides information necessary to operate the Checks and Adjustments Software.

Using the Checks and Adjustments Software

The Checks and Adjustments Software resides on the $5^1/_4$-inch floppy disk located in the front of this manual. You will need an MSDOS system disk version 2.1 or newer to boot your PC. You should keep the Checks and Adjustments Software disk as a master copy, and not use it as a working disk. The following instructions describe how to make a working copy of the Checks and Adjustments Software. Instructions are also given below for installing the Checks and Adjustments Software on a hard disk system. PC commands can be entered as upper or lower case characters.

There are a few operating conditions that must be observed when setting up a PC controller. First, you should *not* use the Checks and Adjustments Software on a PC that is part of a network; since this could result in the PC not receiving important messages or data from the DSA. RAM resident programs can be another source of problems. Ensure that no programs other than MSDOS are loaded at the time your PC is booted. This situation could produce an out of memory error or other system problems. Finally, ensure that a color graphics adapter card is not installed; since this card will produce snow on the PC display during testing.

Creating a Working Disk for a Dual-Floppy Drive System—to create a working copy of the Checks and Adjustments Software, perform the following steps:

☐ Step 1: With the MSDOS system disk in drive A, enter the command

DISKCOPY B: A:

☐ Step 2: The PC will prompt you to insert the source disk (i.e., the Checks and Adjustments Software master disk) in drive B and the blank disk in drive A.

☐ Step 3: Replace the MSDOS disk with a blank disk, put the Checks and Adjustments Software master disk in drive B, and press Return.

☐ Step 4: When formatting is complete, remove the Checks and Adjustments Software master disk, and store the disk in a safe place.

To format a disk for data logging, perform the following steps:

☐ Step 5: Place a blank floppy disk (unformatted) in drive B.

☐ Step 6: With the MSDOS system disk in drive A, enter the command

FORMAT B:

ManualsPlus.com

Installing the Checks and Adjustments Software on a Hard Disk System—to install the Checks and Adjustments Software on your hard disk, use your PC's utilities to create a TEKCATS directory on your hard disk. Then, copy all the files from the Master disk TEKCATS directory to the newly created TEKCATS directory.

Starting the Checks and Adjustments Software—the software should not be started until the DSA under test is properly configured as described later under DSA Preparation.

Once the software is installed and the DSA is properly configured for testing, you can invoke the software with the command:

FIELDCAL

On a dual floppy drive system, enter this command when the working copy of the disk is in drive A, and drive A is selected (A:). For a hard disk system, change to the TEKCATS directory (CD\TEKCATS) before invoking the Checks and Adjustments Software. Alternately, you can add the TEKCATS directory to your executive path with the PATH command (refer to your MSDOS manual).

Once the software is executing, you will be prompted to:

- Enter your name
- Check/Set the current date and time
- Select the device under test (DSA601 or DSA602) being checked
- Power-on the device under test (DUT) and check the RS-232 cable connection
- Verify the DSA's RS-232-C parameters
- Verify that the serial number read from the DSA's internal EEROM is correct (that is, matches the front panel serial number). Enter the correct serial number twice when prompted.

The PC will initialize the powered-on DSA. When properly booted the Checks and Adjustments Software will display the test list menu.

ManualsPlus.com

Selecting menu items—the software presents menus with status information at the top, selections or prompt messages in the middle, and data entry at the bottom. Each selection has a number that must be entered to select the item.

In most menus more than one selection is possible. The software tries to anticipate the usual selection and highlights it as the default. Simply pressing the Enter key will select the highlighted item. If a different selection is desired, enter its number as displayed.

When the procedure directs you to start a test, find the test from the test list menu and enter its corresponding number.

Exiting from the Checks and Adjustments Software and Other F1 Key Options—once executing, the software can be exited by pressing the F1 key then entering a 4 to leave the program. Pressing F1 also offers other options that include:

- Return to (Restart) previous test or menu. This allows you to restart a test after exiting it.
- Back up one menu level. When exiting from a Checks and Adjustments Software test, this will return you to the test list menu.
- Back up to the top menu (i.e., DSA 601 or DSA 602 selection).
- Leave the Checks and Adjustments Software for the MSDOS environment. This terminates the Checks and Adjustments Software and closes the log file.
- Redraw the PC screen.
- Display Checks and Adjustments Software environment information, including the Checks and Adjustments Software CATSOS version number and the application (APPL) version number. These version numbers are necessary when reporting a problem with the software.

Storing and Reloading DSA Calibration Constants—the Checks and Adjustments Software test list menu contains a utility test that provides the ability to store the full set of DSA EEROM calibration constants in a file and, if necessary, reload them into a DSA.

The store option reads all DSA calibration constants and saves them in the file that you specify. This utility may be used before starting repair or adjustment of a DSA to provide a recovery file if something unexpected occurs, such as a loss of power in the building.

The restore test provides the ability to load a complete set of DSA calibration constants from a PC disk file into the DSA. The file can be either one stored earlier as a backup/recovery file or a special default file contained on the Checks and Adjustments Software disk. The default file is a complete set of default calibration constants. The default file should only be used following a catastrophic failure such as the A19 Digitizer CPU board losing its calibration constants memory. After a major repair, you may be asked to load the Default file into the DSA to put the DSA in an initial operating state. The entire Checks and Adjustments procedure must be performed following the loading of the default

ManualsPlus.com

file. The Checks and Adjustments Software disk actually contains separate default files for the DSA 601 (DEFAULT 601) and for the DSA 602 (DEFAULT 602).

- **Using the Utility Tests**. To use the utility test, perform the steps listed under DSA Preparation (later in this part) then select the test **utility** from the test list menu. You will be prompted to choose one of the following:

  1) **DUT_const >file**—This selection stores the current calibration constants from the DSA in a file. After selection, you will be asked to enter the desired disk drive and a name for the file such as b:*directory*\calconst.dat.

  2) **const_file >DUT**—This selection loads a file containing calibration constants into the DSA. After selection, you will be asked to enter the desired disk drive and the name of the calibration constants file.

  3) **Exit menu**—This selection returns you to the test list menu.

When the transfer of calibration constants is complete, the PC will display the status of the transfer.

Test Data Logging—all Checks and Adjustments Software test log results can be transferred to a data log file provided on the Checks and Adjustments Software disk. The data log file is written to a directory which has the same name as the DUT. The instrument serial number is written to the data file as is the date and the time testing began. The data log file is named with the instrument serial number followed by a .DLF suffix (e.g., B010000.DLF). This ensures a unique log file for each DSA checked.

A report generator is included on the Checks and Adjustments Software disk that will print out a specified test log file on an Epson-compatible printer connected to the PC. The report generator takes the cryptic information in the log file and converts it into a useful table format before printing. The report generator is a program separate from the Checks and Adjustments Software and must be invoked when the Checks and Adjustments Software is not executing. To print a test log enter the following command:

CATSRPT *drive:filename*.dlf >prn

To remove old log files enter the DOS command:

ERASE *drive:filename*.dlf.

SRQ Messages—when appropriate, the DSA sends Service Requests (SRQs) to the PC. Usually the SRQ indicates completion of the last command sent by the PC. If the SRQ is not a response to a command and is unexpected by the PC, then it is a spurious SRQ. The spurious SRQ may indicate an error condition in the DSA, an incorrect plug-in unit for the current test, or many other possibilities. For a complete list of SRQ messages, refer to the ASCII interface discussion in the appropriate *User Reference* manual.

When a spurious SRQ occurs, the Checks and Adjustments Software displays a status window as a troubleshooting aid for the operator. The window gives the SRQ status byte, the event number, and a description of the unexpected event.

ManualsPlus.com

To remove the SRQ message press the carriage return. If the PC continues to display an SRQ message, check the settings, connections, and the on/off state of all test equipment and the DSA. After these items have been checked, press the F1 key and select number 1, **Return to previous test**. This will restart the failed test.

- **Clearing a Continuous SRQ Condition**—in unusual circumstances, the DSA may continually generate SRQs or it may not respond to keyboard input. If either of these conditions occur, press the F1 key, and select number 4 to leave the Checks and Adjustments Software. When the MSDOS prompt appears, restart the Checks and Adjustments Software. The Checks and Adjustments Software has a buffer in which it stores SRQ messages from the DSA. Quitting the Checks and Adjustments Software clears this buffer.

  If the SRQ message reappears, it means that the PC-to-DSA communication interface is not synchronized. To correct this condition, leave the Checks and Adjustments Software, **Initialize** the DSA, then cycle the DSA ON/STANDBY switch to OFF and then ON to reset the interface. It is not necessary to power off the PC. When the DSA is powered on, restart the Checks and Adjustments Software.

Error Messages—the PC generates error messages whenever the Checks and Adjustments Software is unable to execute properly or, in some cases, when a Checks and Adjustments Software test fails. The error message displays will briefly describe the problem. If the failure follows an adjustment attempt, then refer to the Troubleshooting section, later in this manual. The following is a partial list of errors and their probable causes:

- **Out of Memory**—the Checks and Adjustments Software needs more memory (empty RAM) to execute. Either another program is executing in RAM or the PC does not have adequate RAM (640 Kbytes) installed to execute the software.
- **Read Failed**—there was a communications failure between the PC and the DSA.
- **Write Failed**—the PC was unable to communicate with the DSA because the power was off or possibly because the RS-232 cable was not properly connected.

DSA Preparation

The following information describes how to configure the DSA, connect the PC, and start the Checks and Adjustments Software. For a detailed discussion of the software, refer to Using the Checks and Adjustments Software, earlier in this section.

- **Remove the Instrument Covers**—set the ON/STANDBY switch to STANDBY. Remove the top and bottom covers from the DSA. Use a coin to turn the four clasps on the top and bottom covers. Then, lift up the front of each cover, then remove the cover.

ManualsPlus.com

- **Installing the Jumper for Testing**—locate the CAL jumper J200 on the A19 Digitizer CPU board (see Fig. 2-11). Install a black short-circuit jumper over the jumper pins.
- **Install the Instrument Covers**—install the covers for performing the software.
- **Connect the RS-232-C Cable, Power On the DSA, Set the RS-232-C**—connect the RS-232 cable (refer to Table 2-2, Test Equipment) from the PC COM1 port to the DSA under test. The cable should be long enough to allow the DSA to be moved about while connected. Turn the rear panel PRINCIPAL POWER SWITCH to ON and the ON/STANDBY switch to ON. When the DSA is powered on, press the UTILITY button and touch **Page to Utility 2**. Then, touch **RS232C Parameters** in the UTILITY major menu. Verify or set the following settings:

Baud Rate	**Echo**	**Stop Bits**
4800	Off	1
Parity	**Flagging**	**Delay**
None	Hard	0
EOL String	**Verbose**	**Debug**
CR/LF	Off	Off

- **Power on the PC**—apply power to the PC if not already powered on. You will need an MSDOS system disk that is version 2.1 or newer. When MSDOS is almost booted, it may ask for the correct time and date. Enter the current time and date. If you are not prompted for the time and date, use the MSDOS commands TIME and DATE to set them. The current time and date are used to date the test log file.
- **Start the Checks and Adjustments Software**—with the DSA already powered on, remove the MSDOS system disk and put in the Checks and Adjustments Software working disk. Put a blank formatted disk in drive B for the data log. Invoke the Checks and Adjustments Software tests by entering DSA600CAL. On a hard disk system, change directories into the TEKCATS directory, then enter DSA600CAL. Refer to Using the Checks and Adjustments Software, earlier in this section for more details.
- **Perform the Field Calibration**—perform all of the tests in the software prior to performing the remaining parts in this section.

ManualsPlus.com

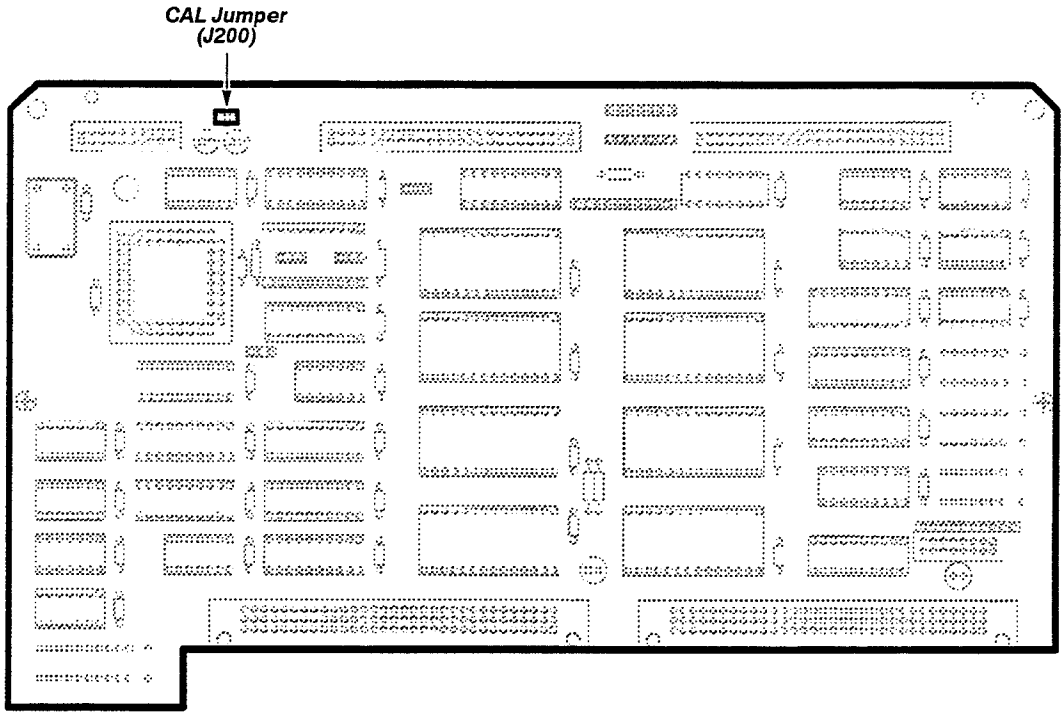

Figure 2-11 — Location of the CAL jumper on the A19 Digitizer CPU

ManualsPlus.com

Part 10
Enhanced Accuracy

The setup is determined by the part that is to be performed. All 11000-Series plug-ins that are used in the part must be installed in their appropriate slots and allowed to warm up for twenty minutes (if they were installed cool).

STOP

If you have previously performed the Enhanced Accuracy procedure while operating the Checks and Adjustments Software, proceed to Part 12, Vertical Gain Accuracy.

CAUTION

To avoid instrument damage, set the DSA's ON/STANDBY switch to STANDBY before installing or removing plug-ins.Turning the instrument power off during probe compensation, Enhanced Accuracy, or Extended Diagnostics may result in some internal data being corrupted.

Procedure to Perform Enhanced Accuracy

☐ Step 1: After the twenty minute warm-up, press the ENHANCED ACCURACY button. The prompt, **Press ENHANCED ACCURACY again to confirm request**, will appear at the top of the display. Press the ENHANCED ACCURACY button again. Enhanced accuracy will take approximately six to ten minutes.

☐ Step 2: *Examine* for the message **Enhanced Accuracy in Progress, Please Leave Instrument on Until Complete** indicating that the DSA 601/DSA 602 is performing enhanced accuracy.

☐ Step 3: *Examine* for the message **Enhanced Accuracy completed and passed** indicating a successful operation. The **EA** indicator will appear below the Vertical Scale Factor on the left side of the display when the instrument has entered the enhanced accuracy mode.

When displayed, the Enhanced Accuracy symbol (**EA**) indicates that the DSA is at its highest accuracy state. The instrument saves the time and ambient temperature for use in maintaining the Enhanced Accuracy state.

In order to preserve the ENHANCED ACCURACY state, remove and install plug-ins as quickly as possible. (Again, first set the ON/STANDBY switch to STANDBY, then remove and install the plug-in, and then set the ON/STANDBY switch to ON.) If either the DSA or plug-in(s) are allowed to cool, the ENHANCED ACCURACY state will be lost.

ManualsPlus.com

Part 11 Probe Calibration

This part shows the setup and lists the procedure to perform a probe calibration.

If the DSA or plug-in is allowed to cool, then Part 10, Enhanced Accuracy, must be performed prior to this part.

STOP

If you have previously performed a probe calibration while operating the Checks and Adjustments Software, proceed to Part 12, Vertical Gain Accuracy.

Setup to Perform Probe Calibration

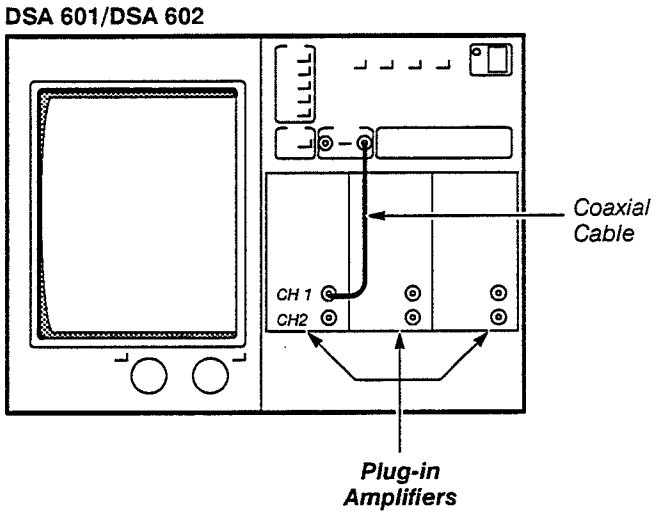

Setup to Perform Probe Calibration

Procedure to Perform Probe Calibration

- ☐ Step 1: Press the WAVEFORM button, and then touch **Horizontal Desc**.
- ☐ Step 2: Touch **1 GS/sec Realtime** in the Horizontal Description pop-up menu to enable the Digitizer interleave.
- ☐ Step 3: Press the UTILITY button, and then touch **Probes**.
- ☐ Step 4: Touch **L1** in the **Probes** pop-up menu.

  Note: *The message* ***Probe Cal/Deskew/Compensation in Progress*** *should appear in the center of the screen. This message and various screen displays appear while this calibration is performed.*

- ☐ Step 5: *Examine* that the message **Probe calibration passed. Perform probe compensation procedure then select menu entry to continue** is displayed to ensure that the probe calibration has passed.
- ☐ Step 6: Touch **Exit Comp** in the **Probe Compensation** pop-up menu.

ManualsPlus.com

Part 12 Vertical Gain Accuracy

This part shows the setup and lists the procedure to examine the vertical gain accuracy. All signal standardizers used in this part should have their clock outputs in the 10X position before they are installed. The clock output is controlled by a switch located on the circuit board inside the signal standardizer. Set the switch so that it is towards the front of the signal standardizer.

Measurement Limit

The vertical gain accuracy for all pipe paths must be within 1%.

Setup to Examine Pipe 3 Left Path

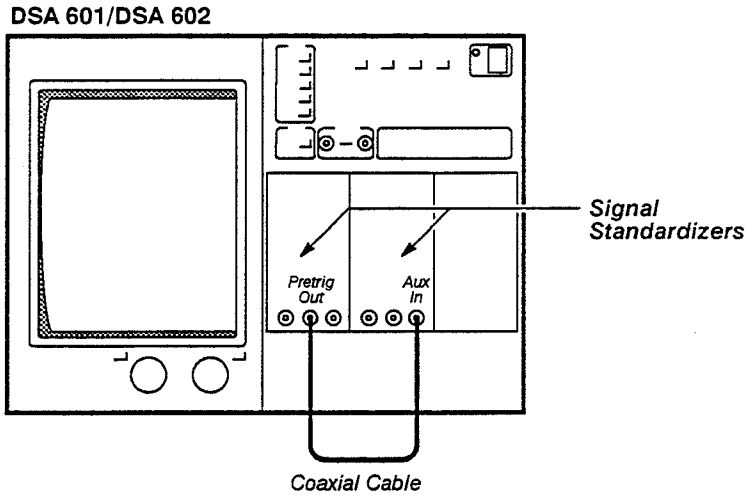

Setup to Examine Pipe 3 Left Path

Procedure to Examine Pipe 3 Left Path

☐ **Step 1: Initialize** the DSA settings, then perform the following settings in the order listed:

Left signal standardizer
- Test ..... Vert Gain
- Rep Rate ..... 10 kHz

Center signal standardizer
- Test ..... Trigger Freq Resp
- Amplitude ..... Midrange
- Rep Rate ..... 10 kHz

DSA 601 or DSA 602
- **Main Size** ..... 200 µs/div
- **Def Wfm** ..... touch
  - **L** ..... touch
  - **Enter Desc** ..... touch

ManualsPlus.com

TRIGGER button . . . . . press
Source Desc . . . . . touch
C . . . . . touch
Enter Desc . . . . . touch
WAVEFORM button . . . . . press
Acquire Desc . . . . . touch
Average N . . . . . **On**
Acquire Desc . . . . . touch

☐ Step 2: Center the waveform with the Position knob on the left-most signal standardizer.

☐ Step 3: Touch the **Cursors** icon on the top of the screen, and then **Cursor Type**.

☐ Step 4: Touch **Horizontal Bars** in the **Cursor Type** pop-up menu.

☐ Step 5: Press the two FINE buttons next to the two control knobs.

☐ Step 6: Position **Cursor 2** on the waveform step that is four divisions above the horizontal centerline.

☐ Step 7: Position **Cursor 1** on the waveform step that is four divisions below the horizontal centerline.

☐ Step 8: *Examine* the **ΔV** readout is 8 U ±.08 U (1%).

Setup to Examine Pipe 1 Center Path

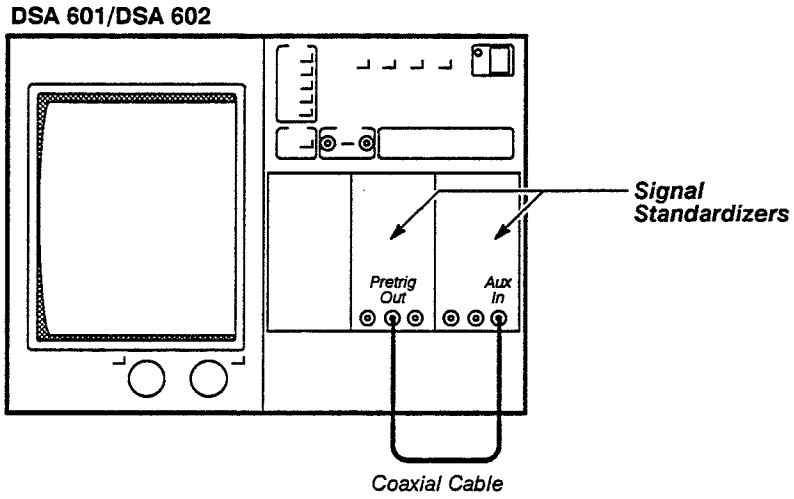

Setup to Examine Pipe 1 Center Path

ManualsPlus.com

Procedure to Examine Pipe 1 Center Path

☐ Step 1: **Initialize** the DSA settings, then perform the following settings in the order listed:

Center signal standardizer
- Test ..... Vert Gain
- Rep Rate ..... 10 kHz

Right signal standardizer
- Test ..... Trigger Freq Resp
- Amplitude ..... Midrange
- Rep Rate ..... 10 kHz

DSA 601 or DSA 602
- **Main Size** ..... 200 µs/div
- **Def Wfm** ..... touch
  - **C** ..... touch
  - **Enter Desc** ..... touch
- TRIGGER button ..... press
  - **Source Desc** ..... touch
    - **R** ..... touch
    - **Enter Desc** ..... touch
- WAVEFORM button ..... press
  - **Acquire Desc** ..... touch
    - **Average N** ..... **On**
  - **Acquire Desc** ..... touch

☐ Step 2: Center the waveform with the Position knob on the center signal standardizer.

☐ Step 3: Touch the **Cursors** icon on the top of the screen and then **Cursor Type**.

☐ Step 4: Touch **Horizontal Bars** in the **Cursor Type** pop-up menu.

☐ Step 5: Press the two FINE button next to the two control knobs.

☐ Step 6: Position **Cursor 2** on the waveform step that is four divisions above the horizontal centerline.

☐ Step 7: Position **Cursor 1** on the waveform step that is four divisions below the horizontal centerline.

☐ Step 8: *Examine* the **ΔV** readout is 8 U ±.08 U (1%).

ManualsPlus.com

Setup to Examine Pipe 3 Right Path

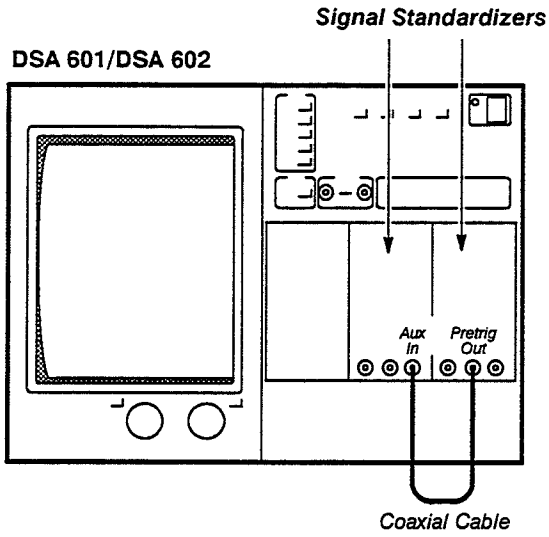

Setup to Examine Pipe 3 Right Path

Procedure to Examine Pipe 3 Right Path

☐ Step 1: **Initialize** the DSA settings, then perform the following settings in the order listed:

Right signal standardizer
- Test ..... Vert Gain
- Rep Rate ..... 10 kHz

Center signal standardizer
- Test ..... Trigger Freq Resp
- Amplitude ..... Midrange
- Rep Rate ..... 10 kHz

DSA 601 or DSA 602
- **Main Size** ..... 200 µs/div
- **Def Wfm** ..... touch
  - **R** ..... touch
  - **Enter Desc** ..... touch
- TRIGGER button ..... press
  - **Source Desc** ..... touch
    - **C** ..... touch
    - **Enter Desc** ..... touch
- WAVEFORM button ..... press
  - **Acquire Desc** ..... touch
    - **Average N** ..... **On**
  - **Acquire Desc** ..... touch

ManualsPlus.com

- ☐ Step 2: Center the waveform with the Position knob on the right-most signal standardizer.
- ☐ Step 3: Touch the **Cursors** icon on the top of the screen, and then **Cursor Type**.
- ☐ Step 4: Touch **Horizontal Bars** in the **Cursor Type** pop-up menu.
- ☐ Step 5: Press the two FINE buttons next to the two control knobs.
- ☐ Step 6: Position **Cursor 2** on the waveform step that is four divisions above the horizontal centerline.
- ☐ Step 7: Position **Cursor 1** on the waveform step that is four divisions below the horizontal centerline.
- ☐ Step 8: *Examine* the **ΔV** readout is 8 U ±.08 U (1%).

ManualsPlus.com

Part 13 Time Base Accuracy

This part shows the setup and lists the procedure to check the time base accuracy.

Press the **ENHANCED ACCURACY** button. Enhanced Accuracy will self-calibrate to the highest accuracy level (better than 1% vertical accuracy).

Specification

Time Base accuracy must be within ±0.005% of measurement interval.

Setup to Check Time Base Accuracy

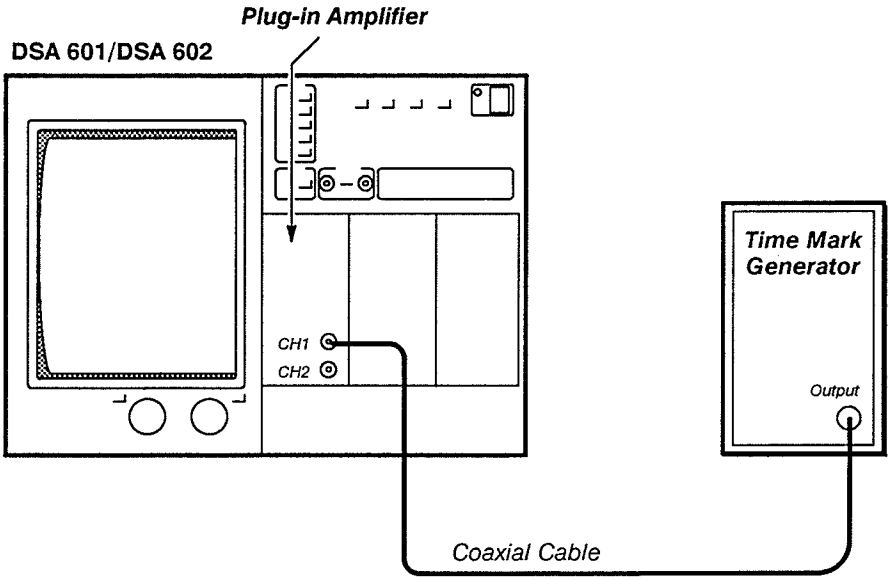

Setup to Check Time Base Accuracy

Procedure to Check Time Base Accuracy

☐ Step 1: **Initialize** the DSA settings, then perform the following settings in the order listed.

Plug-in amplifier
- CH1 display on/off ..... on

DSA 601 or DSA 602
- **Main Size** ..... 1 ns/div
- **Vert Size** ..... 200 mV/div
- **Impedance** ..... 50 Ω

Time mark generator
- Marker (sec) ..... 5 ns

☐ Step 2: Press the TRIGGER button, and then touch **Level**.

☐ Step 3: *Adjust* the **Trig Level** and **Main Time Holdoff** for a stable display.

ManualsPlus.com

- ☐ Step 4: Press the WAVEFORM button, and then touch **Acquire Desc.**
- ☐ Step 5: Set **Average N** to **On** in the **Acquire Description** pop-up menu.
- ☐ Step 6: Touch the horizontal icon, and then set **Main Size** to 2 μs/division. Set **Main Pos** to 0 s. (Ignore the main waveform in the following steps, since it will appear to be unstable.)
- ☐ Step 7: Touch **Window 1**.
- ☐ Step 8: Set the **Window1 Pos** to 0 s.
- ☐ Step 9: Touch a portion of the main waveform.
- ☐ Step 10: Touch **Window 2**.
- ☐ Step 11: Set the **Window2 Pos** to 20 μs.
- ☐ Step 12: Set the **Window Size** to 1 ns/div.
- ☐ Step 13: Touch **Cursors** at the top of the lower graticule.
- ☐ Step 14: Touch **Cursor Type** and the **Vertical Bars** in the **Cursor Type** pop-up menu.
- ☐ Step 15: Set the **Cursor 1** and **Cursor 2** on corresponding peaks of the Window 1 and Window 2 waveforms.
- ☐ Step 16: Check that Δt reads 0 ±1 ns (0.005% of the 20 μs Main measurement interval).

ManualsPlus.com

Part 14 Window Record Accuracy

This part shows the setup and lists the procedure to check the window record accuracy.

Specification

Window record accuracy must be within ±0.005% of the reading + 150 ps

$+\left(\frac{100\ ps}{\sqrt{N}}\right)$, where N is the number of averages

Setup to Check Window Record Accuracy

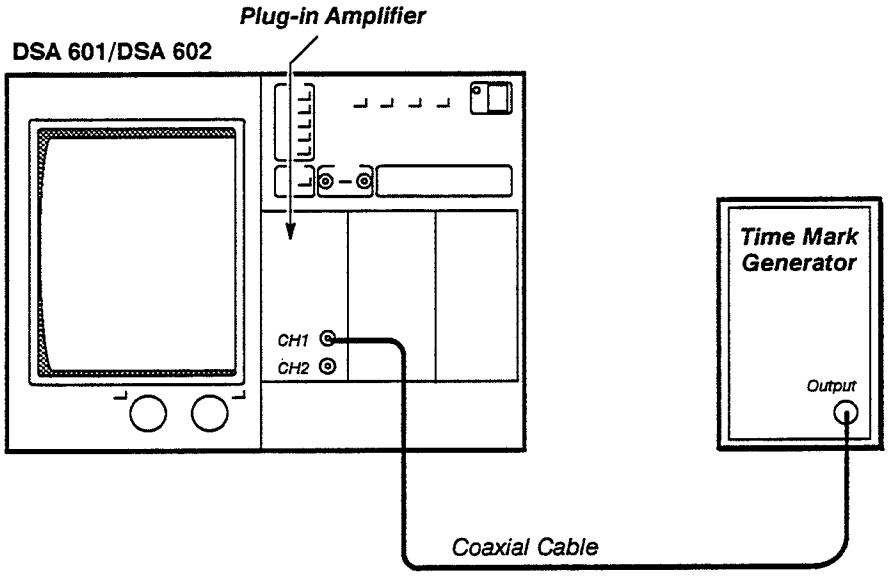

Setup to Check Window Record Accuracy

Procedure to Check Window Record Accuracy

☐ **Step 1: Initialize** the DSA settings, then perform the following settings in the order listed.

Time mark generator
- Marker (sec) ..... 5 ns

Plug-in amplifier
- CH 1 display on/off ..... on

DSA 601 or DSA 602
- **Input Parameters** ..... **50 Ω**
- **Main Size** ..... 200 ns/div
- **Vert Size: L1** ..... 50 mV/div
- **Vert Offset: L1** ..... set for a centered display

☐ Step 2: Touch **Window 1**.

ManualsPlus.com

- ☐ Step 3: Press the TRIGGER button, and then set **Trigger Select** to **Window**.
- ☐ Step 4: Touch **Source Desc** in the TRIGGER major menu, and then set the **Window Trigger Mode** to **Window Holdoff By Events**.
- ☐ Step 5: Touch **Events Holdoff** in the TRIGGER major menu, and then set the **Wdw Event Holdoff** to 200.
- ☐ Step 6: Press the MEASURE button.
- ☐ Step 7: Touch **Measurements** in the MEASURE major menu, and then **Main→Win Trig Time**.
- ☐ Step 8: *Check* that the **Main → Win Trig Time** reading is 1 μs ±300 ps (±0.005% of 1 μs + 150 ps + 100 ps).

ManualsPlus.com

Part 15 Trigger Level Accuracy

This part shows the setup and lists the steps to check the trigger level accuracy.

Specification

The trigger level accuracy must be within 0.2 divisions (2% of full scale).

Setup to Check Trigger Level Accuracy

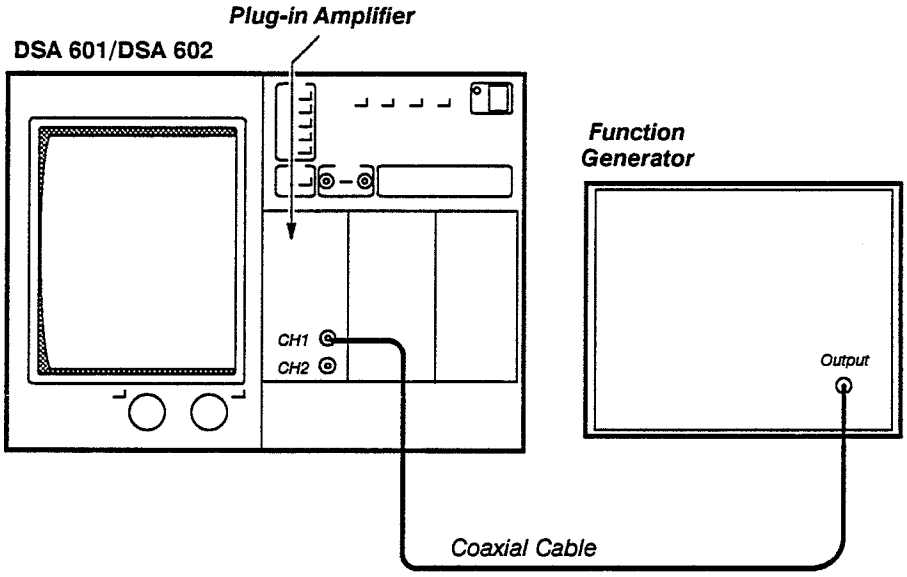

Setup to Check Trigger Level Accuracy

Procedure to Check Trigger Level Accuracy

☐ Step 1: **Initialize** the DSA settings, then perform the following settings in the order listed.

Plug-in amplifier
- CH 1 display on/off ..... on

DSA 601 or DSA 602
- **Vert Size: L1** ..... 500 mV/div
- **Main Size** ..... 1 ms/div
- **Main Pos** 0
- **Acquire Desc** ..... touch
- **Average N** ..... **On**

Function generator
- Function ..... Sine
- Ampl ..... set for 5 V p-p display
- Freq ..... 1 kHz

☐ Step 2: Touch the cursors icon at the top of the screen.

ManualsPlus.com

- ☐ Step 3: Set **Cursor 1** so that **t1** = 0.00.
- ☐ Step 4: Touch the **trig'd** icon, and then set the **Main Trig Level** to various settings between +500 mV and −500 mV.
- ☐ Step 5: *Check* that for each **Main Trig Level** setting, **v1** − **Main Trig Level** setting is within ±100 mV (0.2 divisions).

ManualsPlus.com

Part 16 Trigger Sensitivity

This part shows the setup and lists the steps to check/examine the trigger sensitivity.

Specifications

The specifications for this part are that the display will trigger for the following:

- DC Coupled—0.4 div from DC to 10 MHz, increasing to 1 div at 1 GHz
- DC Noise Reject Coupled—1.2 div from DC to 10 MHz, increasing to 3 div at 1 GHz
- AC Coupled—0.4 div from 60 Hz to 10 MHz, increasing to 1 div at 1 GHz
- AC HF Reject Coupled—0.5 div from 60 Hz to 30 kHz
- AC LF Reject Coupled—0.5 div from 80 kHz to 10 MHz, increasing to 1 div at 1 GHz

Measurement Limits

The measurement limits for this part are that the display will not trigger for the following:

- DC Coupled—0.1 div up to 1 GHz
- DC Noise Reject Coupled—0.5 div up to 1 GHz
- AC Coupled—0.1 div up to 1 GHz
- AC HF Reject Coupled—0.1 div up to 30 kHz
- AC LF Reject Coupled—0.1 div up to 1 GHz

ManualsPlus.com

Setup to Check/Examine Trigger Sensitivity

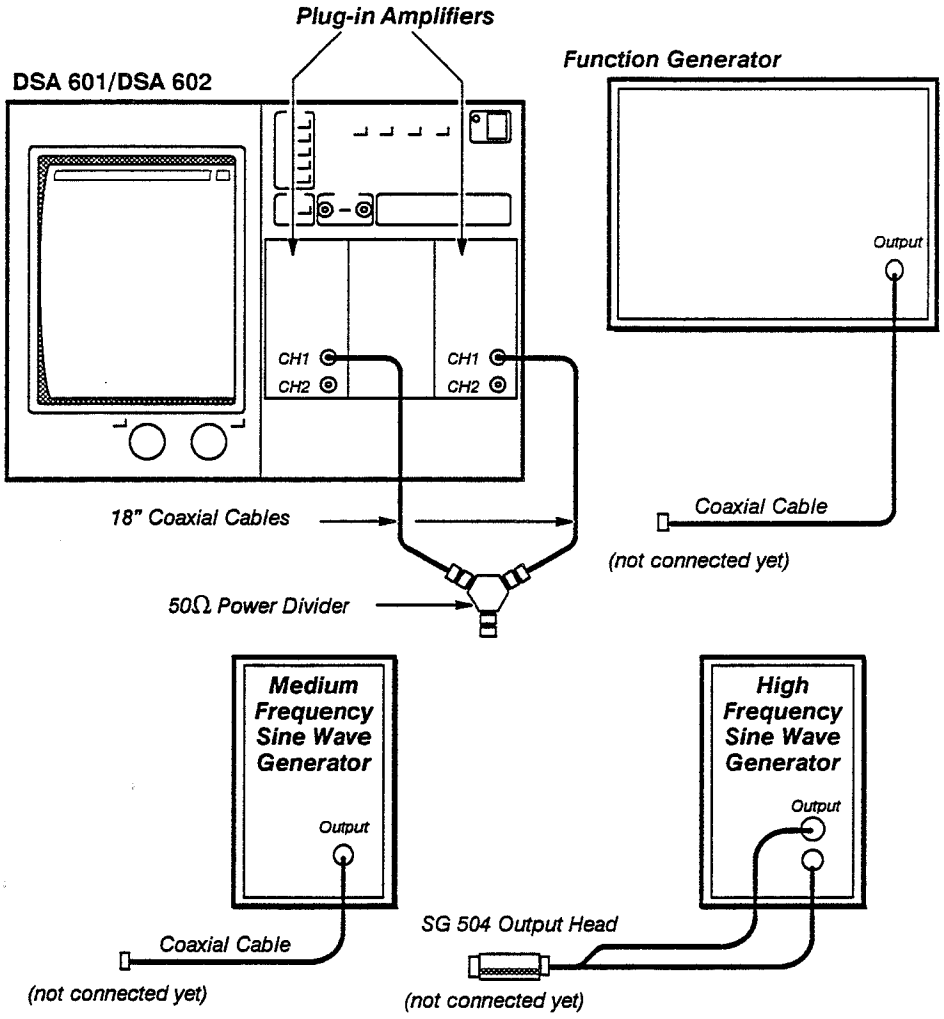

Setup to Check/Examine Trigger Sensitivity

Procedure to Check/Examine Trigger Sensitivity

☐ Step 1: **Initialize** the DSA settings, then perform the following settings in the order listed:

Left plug-in amplifier ..... no settings required
Right plug-in amplifier
CH 1 display on/off ..... on
DSA 601 or DSA 602
TRIGGER button ..... press
Source Desc ..... touch
L1 ..... touch
Enter Desc ..... touch

ManualsPlus.com

Function generator

Function . . . . . Sine

Medium frequency sine wave generator . . . . . no settings required

High frequency sine wave generator . . . . . no settings required

☐ Step 2: Set **Coupling** in the TRIGGER major menu to the setting that is listed in Table 2-4 for the particular test you are performing (begin with Test 1).

☐ Step 3: Set the **Main Size** to the setting that is listed in Table 2-4 for the particular test you are performing.

☐ Step 4: Set the **Vert Size: R1** to the setting that is listed in Table 2-4 for the particular test you are performing.

☐ Step 5: Connect the generator, that is listed in Table 2-5 for the particular test you are performing, to the unconnected end of the power divider.

☐ Step 6: Set the generator Frequency to the setting that is listed in Table 2-5 for the particular test you are performing.

☐ Step 7: Set the generator Amplitude so that the screen displays a sine wave of amplitude equal to the Low Amplitude Limit listed in Table 2-5 for the particular test you are performing.

☐ Step 8: *Examine* that the waveform is not triggered for display amplitudes $\leq$ to Low Amplitude Limit. The waveform is not triggered when the **!not!** icon above the **trig'd** icon is intermittently or continuously visible.(Vary the **Main Trig Level** to ensure that the waveform will not trigger.)

Note: ***Note:*** *To derive the number of divisions of signal that is referred to under the Specifications and Measurement Limits, use the following formula:*

$$\text{divisions} = \frac{\textbf{High or Low Amplitude Limit} \times \textbf{Vert Size : R1}}{\textbf{Vert Size : L1}\ (1\text{V/div})}$$

☐ Step 9: Set the generator Amplitude so that the screen displays a sine wave of amplitude equal to the High Amplitude Limit listed in Table 2-5 for the particular test you are performing.

☐ Step 10: *Check* that the waveform will trigger. The waveform is triggered when the **!not!** icon is not visible. (The **Main Trig Level** may have to be set to achieve a triggered display.)

☐ Step 11: Disconnect the generator from the power divider.

☐ Step 12: Repeat Steps 2 through 10 for each Test listed in Tables 2-4 and 2-5.

ManualsPlus.com

Table 2-4 — Trigger Sensitivity DSA Settings

Test	Trigger Coupling	Main Size	Vert Size: R1
Test1	DC	500 µs/div	100 mV/div
Test 2	DC	50 ns/div	100 mV/div
Test 3	DC	500 ps/div	100 mV/div
Test 4	DC Noise Reject	500 µs/div	200 mV/div
Test 5	DC Noise Reject	10 ns/div	200 mV/div
Test 6	DC Noise Reject	500 ps/div	200 mV/div
Test 7	AC	10 ms/div	100 mV/div
Test 8	AC	50 ns/div	100 mV/div
Test 9	AC	500 ps/div	100 mV/div
Test 10	AC High Freq Rej	10 ms/div	100 mV/div
Test 11	AC High Freq Rej	20 µs/div	100 mV/div
Test 12	AC Low Freq Rej	5 µs/div	100 mV/div
Test 13	AC Low Freq Rej	50 ns/div	100 mV/div
Test 14	AC Low Freq Rej	500 ps/div	100 mV/div

ManualsPlus.com

Table 2-5 — Trigger Sensitivity Generator Settings

Test	Generator	Frequency	Amplitude Limits	
			Low	High
Test1	Function	1 kHz*	1.0 div	4.0 div
Test 2	Medium Frequency Sine Wave	10 MHz	1.0 div	4.0 div
Test 3	High Frequency Sine Wave	1 GHz	1.0 div	10.0 div
Test 4	Function	1 kHz*	2.5 div	6.0 div
Test 5	Medium Frequency Sine Wave	10 MHz	2.5 div	6.0 div
Test 6	High Frequency Sine Wave	1 GHz	1.0 div	6.0 div
Test 7	Function	60 Hz	1.0 div	4.0 div
Test 8	Medium Frequency Sine Wave	10 MHz	1.0 div	4.0 div
Test 9	High Frequency Sine Wave	1 GHz	1.0 div	10.0 div
Test 10	Function	60 Hz	1.0 div	5.0 div
Test 11	Function	30 kHz	1.0 div	5.0 div
Test 12	Function	80 kHz	1.0 div	5.0 div
Test 13	Medium Frequency Sine Wave	10 MHz	1.0 div	5.0 div
Test 14	High Frequency Sine Wave	1 GHz	1.0 div	10.0 div

**The difference in response between a DC signal and a 1 kHz sine wave is negligible. Therefore, a 1 kHz sine wave is substituted for the DC signal so that the test will be simpler to perform.*

ManualsPlus.com

Part 17 Cable Characterization

This part shows the setup and lists the procedure to examine/set the cable characterization that will be used in Parts 18, 19, and 20.

Measurement Limit

The propagation delay difference must be within 1.7 ns and 2.0 ns.

Setup to Examine/Set the Cable Characterization

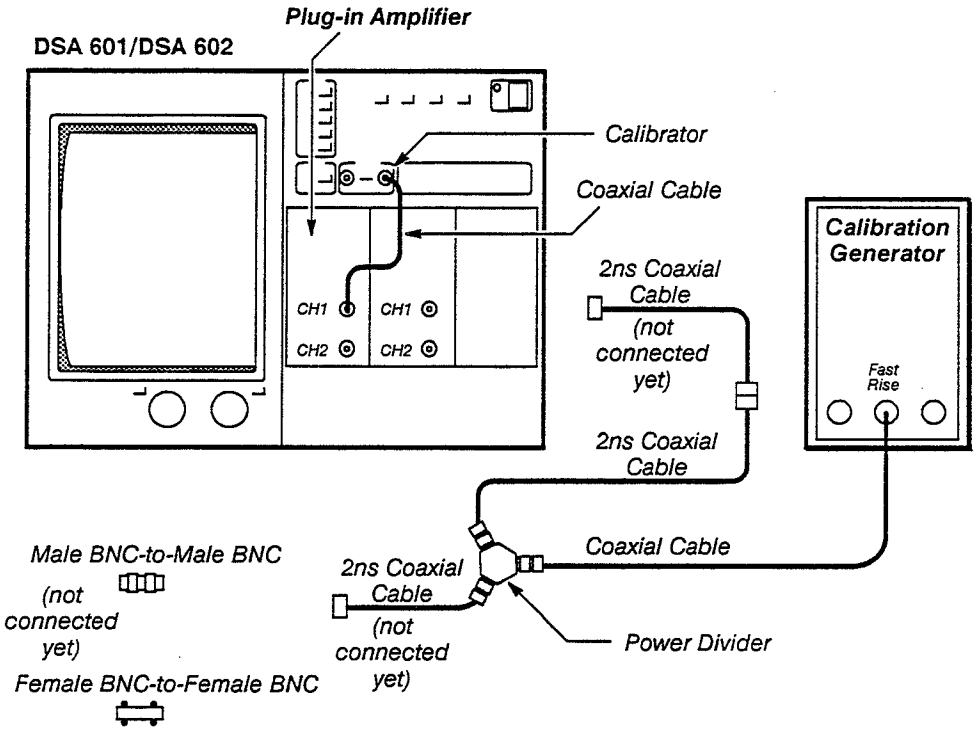

Setup to Examine/Set the Cable Characterization

Procedure to Examine/Set the Cable Characterization

☐ Step 1: **Initialize** the DSA settings, then perform the following settings in the order listed.

Calibration generator
- Pulse Amplitude ..... Max
- Period ..... 1 µs
- Mode ..... Fast Rise

Left plug-in amplifier
- CH 1 display on/off ..... on

Center plug-in amplifier
- CH 1 display on/off ..... on

ManualsPlus.com

DSA 601 or DSA 602

Vert Size: C1 ..... 200 mV/div
Vert Size: L1 ..... 200 mV/div
TRIGGER button ..... press
Level ..... –250 mV
Main Size ..... 500 ps/div

☐ Step 2: Press the UTILITY button.

☐ Step 3: Touch **Probes** and then **L1** in the **Probes** pop-up menu.

Note: *The probe calibration process will last about one minute. The message* **Probe calibration passed. Perform probe compensation procedure then select menu entry to continue** *should appear when the probe calibration is completed.*

☐ Step 4: Disconnect the coaxial cable from the left CH 1 input and connect it to the center CH 1 input.

☐ Step 5: Touch **Select Next Chan** and the **C1** in the **Probes** pop-up menu.

☐ Step 6: After the probe calibration is completed, disconnect the coaxial cable from the center CH 1 input.

☐ Step 7: Connect the single coaxial cable from the power divider to the left CH 1 input and the two connected coaxial cables from the power divider to the center CH 1 input.

☐ Step 8: Set the **Main Pos** so that the rising edges of both waveforms are approximately centered.

☐ Step 9: Press the WAVEFORM button, and then touch **Acquire Desc**.

☐ Step 10: Set **Average N** to **On** in the **Acquire Description** pop-up menu.

☐ Step 11: Touch the center CH1 waveform on the screen (should be the left-most step) to select that waveform.

☐ Step 12: Touch **Acquire Desc** in the WAVEFORM major menu, and then set **Average N** to **On** in the **Acquire Description** pop-up menu.

☐ Step 13: Press the MEASURE button, and then touch **Measurements**.

☐ Step 14: Touch **Prop Delay** in the **Measurements** pop-up menu.

☐ Step 15: *Examine* that the **Prop Delay** readout is between 1.7 ns and 2.0 ns.

STOP

DO NOT attempt to set the propagation delay between the CH1 and CH2 signals if the reading is within the stated limits. Proceed to Part 18, Boolean Trigger Minimum True Width.

ManualsPlus.com

☐ Step 16: If the **Prop Delay** readout is less than 1.7 ns, then insert a male BNC-to-male BNC adapter and a female BNC-to-female BNC adapter in the left CH 2 signal path. If the **Prop Delay** readout is greater than 2.0 ns, then insert a male BNC-to-male BNC adapter and a female BNC-to-female BNC adapter in the left CH 1 signal path. Repeat Steps 8 and 9 until the reading is within the stated limit.

Note: *If you have the equipment available to cut the cables, it may be easier for you to cut the cables for the specified propagation delay than to insert the adapters in the signal path.*

Once the proper propagation delay is achieved, note the configuration of the cables for use in Parts 18, 19 and 20.

ManualsPlus.com

Part 18 Boolean Trigger Minimum True Width

This part shows the setup and lists the procedures to check the Boolean trigger true minimum width. To achieve the proper propagation delay (from 1.7 ns to 2.0 ns) between the two input signals from the calibration generator, use the cable configuration found in Part 17, Cable Characterization.

Specification

The display must trigger if the Boolean trigger function is true for a minimum of 2.0 ns. An individual Boolean operand (in this case the signal L1, C1, R1, NOT L1, NOT C1, or NOT R1) is true if its amplitude is greater than its trigger level.

Setup to Check Boolean Trigger with Left AND Center

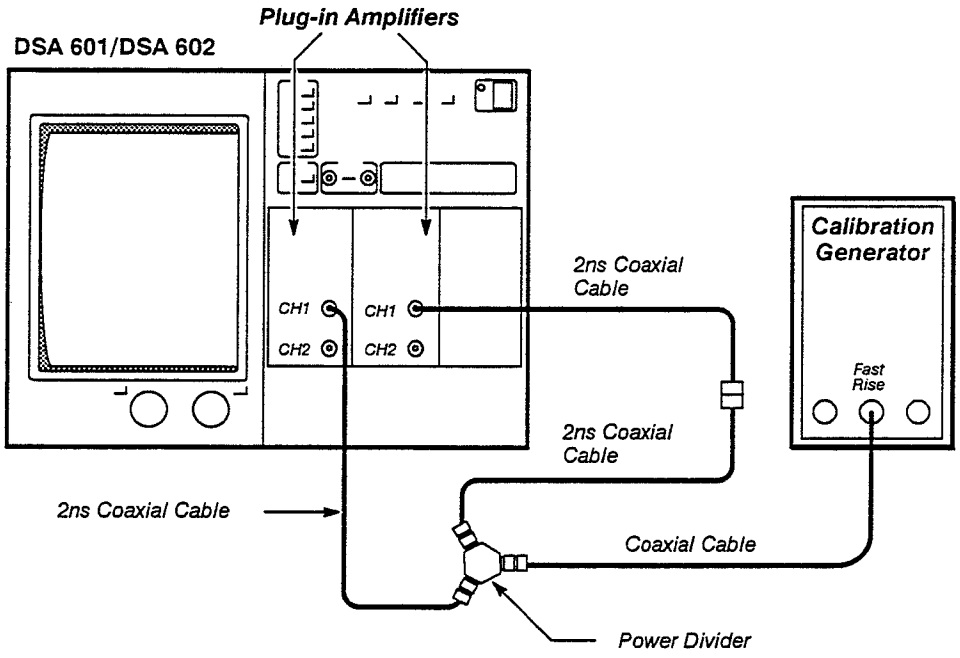

Setup to Check Boolean Trigger with Left AND Center

Procedure to Check Boolean Trigger with Left AND Center

☐ Step 1: **Initialize** the DSA settings, then perform the following settings in the order listed.

Calibration generator
- Pulse Amplitude ..... Max
- Period ..... 1 µs
- Mode ..... Fast Rise

Left plug-in amplifier ..... no settings required

Center plug-in amplifier ..... no settings required

ManualsPlus.com

DSA 601 or DSA 602

Def Wfm ..... touch
L1 ..... touch
Enter Desc ..... touch
Vert Size: L1 ..... 100 mV/div
Vert Offset: L1 ..... –250 mV
Def Wfm ..... touch
C1 ..... touch
Enter Desc ..... touch
Vert Size: C1 ..... 100 mV/div
Vert Offset: C1 ..... –250 mV
TRIGGER button ..... press
Source Desc ..... touch
L1 ..... touch
AND ..... touch
NOT ..... touch
C1 ..... touch
Enter Desc ..... touch
LevelA ..... –250 mV
Level B ..... –250 mV
Main Size ..... 2 ns/div
Main Pos ..... center the rising edges

☐ Step 2: *Check* that the rising edge of both waveforms is displayed, and that both waveforms are triggered.

☐ Step 3: Disconnect the cables from the plug-in amplifiers and then connect the short cable to the center CH 1 input connector and the long cable to the left CH 1 input connector.

☐ Step 4: Touch **Source Desc** in the **Trigger** major menu, and then the following selectors in the **Main Trigger Source Description** pop-up menu:

- **C1**
- **AND**
- **NOT**
- **L1**
- **Enter Desc**

☐ Step 5: *Check* that the rising edge of both waveforms is displayed, and that both waveforms are triggered.

ManualsPlus.com

Setup to Check Boolean Trigger with Center AND Right

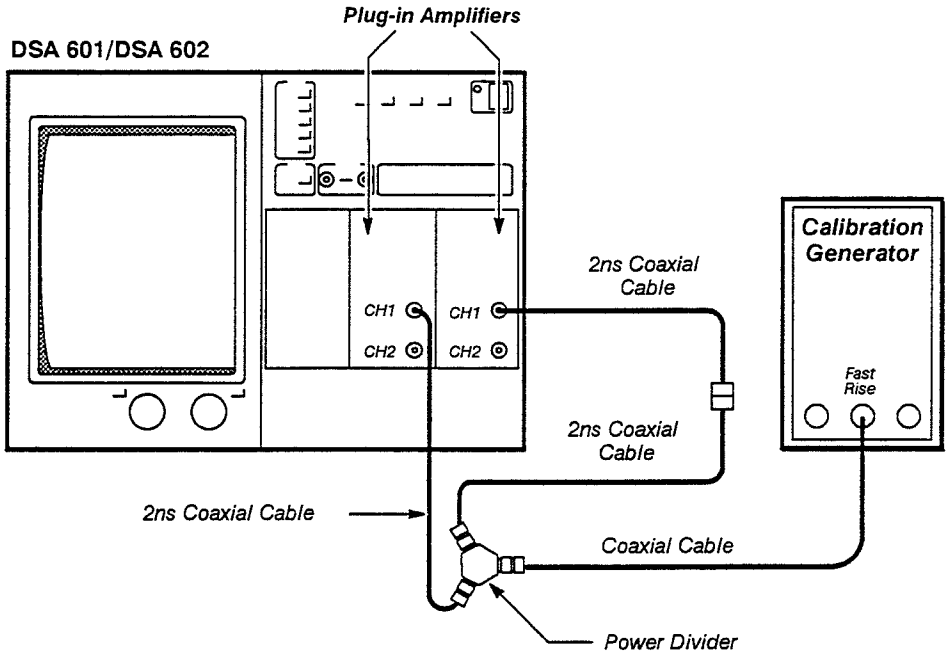

Setup to Check Boolean Trigger with Center AND Right

Procedure to Check Boolean Trigger with Center AND Right

☐ Step 1: **Initialize** the DSA settings, then perform the following settings in the order listed.

Calibration generator
- Pulse Amplitude ..... Max
- Period ..... 1 µs
- Mode ..... Fast Rise

Center plug-in amplifier ..... no settings required

Right plug-in amplifier ..... no settings required

DSA 601 or DSA 602
- **Def Wfm** ..... touch
  - **C1** ..... touch
  - **Enter Desc** ..... touch
- **Vert Size: C1** ..... 100 mV/div
- **Vert Offset: C1** ..... –250 mV
- **Def Wfm** ..... touch
  - **R1** ..... touch
  - **Enter Desc** ..... touch
- **Vert Size: R1** ..... 100 mV/div
- **Vert Offset: R1** ..... –250 mV

ManualsPlus.com

TRIGGER button . . . . . press
Source Desc . . . . . touch
C1 . . . . . touch
AND . . . . . touch
NOT . . . . . touch
R1 . . . . . touch
Enter Desc . . . . . touch
LevelA . . . . . –250 mV
Level B . . . . . –250 mV
Main Size . . . . . 2 ns/div
Main Pos . . . . . center the rising edges

☐ Step 2: *Check* that the rising edge of both waveforms is displayed, and that both waveforms are triggered.

☐ Step 3: Disconnect the cables from the plug-in amplifiers and then connect the short cable to the right CH 1 input connector and the long cable to the center CH 1 input connector.

☐ Step 4: Touch **Source Desc** in the TRIGGER major menu, and then the following selectors in the **Main Trigger Source Description** pop-up menu:

- **R1**
- **AND**
- **NOT**
- **C1**
- **Enter Desc**

☐ Step 5: *Check* that the rising edge of both waveforms is displayed, and that both waveforms are triggered.

ManualsPlus.com

Setup to Check Boolean Trigger with Left AND Right

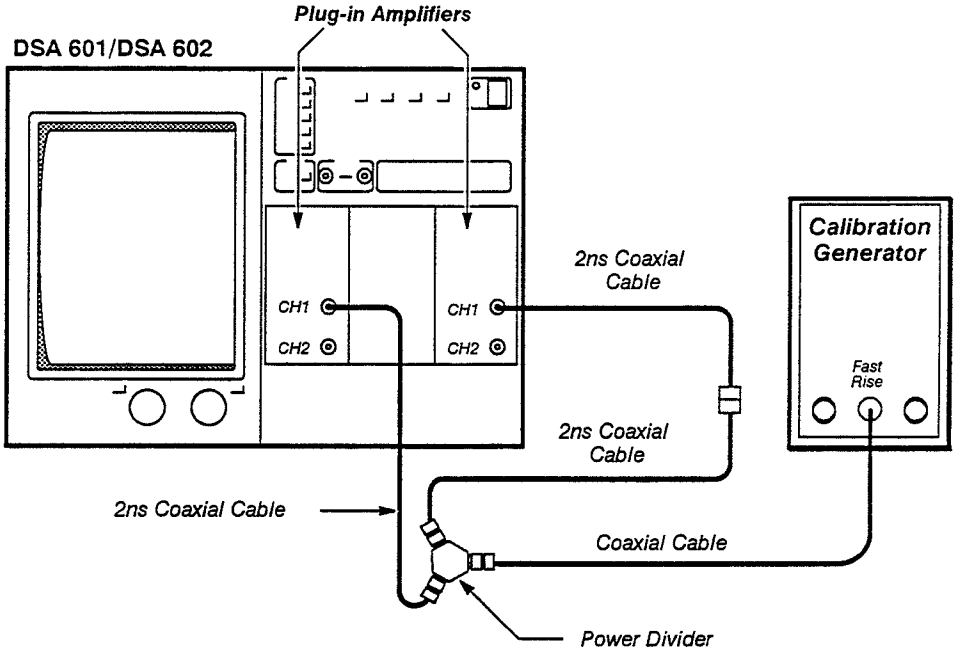

Setup to Check Boolean Trigger with Left AND Right

Procedure to Check Boolean Trigger with Left AND Right

☐ Step 1: **Initialize** the DSA settings, then perform the following settings in the order listed.

Calibration generator
- Pulse Amplitude ..... Max
- Period ..... 1 µs
- Mode ..... Fast Rise

Left plug-in amplifier ..... no settings required
Right plug-in amplifier ..... no settings required
DSA 601 or DSA 602
- **Def Wfm** ..... touch
  - **L1** ..... touch
  - **Enter Desc** ..... touch
- **Vert Size: L1** ..... 100 mV/div
- **Vert Offset: L1** ..... –250 mV
- **Def Wfm** ..... touch
  - **R1** ..... touch
  - **Enter Desc** ..... touch
- **Vert Size: R1** ..... 100 mV/div
- **Vert Offset: R1** ..... –250 mV

ManualsPlus.com

TRIGGER button ..... press
Source Desc ..... touch
L1 ..... touch
AND ..... touch
NOT ..... touch
R1 ..... touch
Enter Desc ..... touch
Level A ..... –250 mV
Level B ..... –250 mV
Main Size ..... 2 ns/div
Main Pos ..... center the rising edges

☐ Step 2: *Check* that the rising edge of both waveforms is displayed, and that both waveforms are triggered.

☐ Step 3: Disconnect the cables from the plug-in amplifiers and then connect the short cable to the right CH 1 input connector and the long cable to the left CH 1 input connector.

☐ Step 4: Touch **Source Desc** in the TRIGGER major menu, and then the following selectors in the **Main Trigger Source Description** pop-up menu:

- **R1**
- **AND**
- **NOT**
- **L1**
- **Enter Desc**

☐ Step 5: *Check* that the rising edge of both waveforms is displayed, and that both waveforms are triggered.

ManualsPlus.com

Part 19 Boolean Trigger Minimum False Time

This part shows the setup and lists the steps to check the Boolean trigger minimum false time. To achieve the proper propagation delay (1.7 ns to 2.0 ns) between the two input signals, use the cable configuration found in Part 17, Cable Characterization.

Specification

The display must trigger if the Boolean trigger function is false for a minimum of 2.0 ns. An individual Boolean operand (in this case the signal L1, C1, R1, NOT L1, NOT C1, or NOT R1) is false if its amplitude is less than its trigger level.

Setup to Check Boolean Trigger with Left OR Center

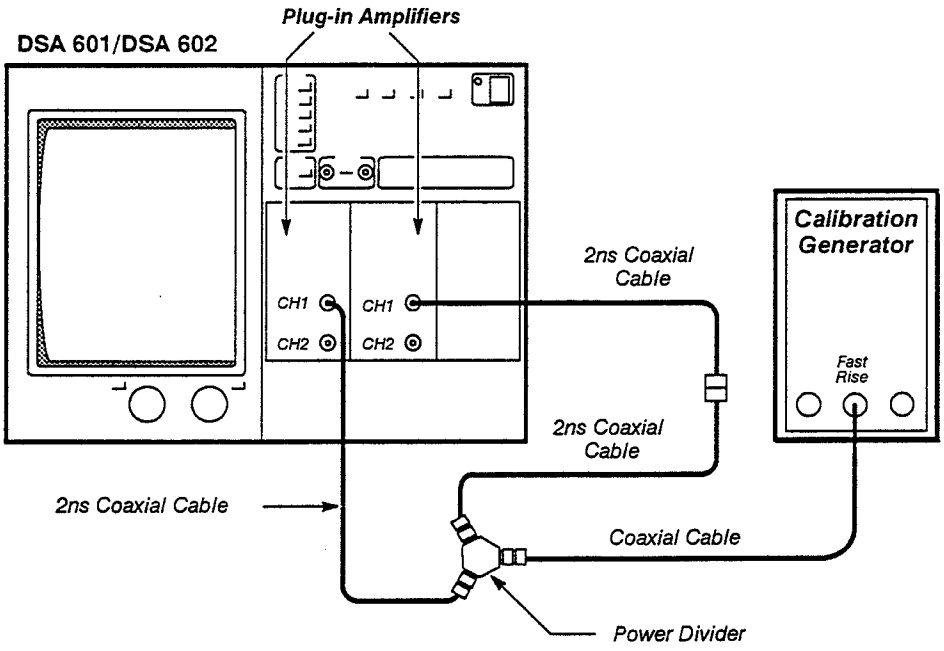

Setup to Check Boolean Trigger with Left OR Center

Procedure to Check Boolean Trigger with Left OR Center

☐ Step 1: **Initialize** the DSA settings, then perform the following setting in the order listed.

Calibration generator
- Pulse Amplitude ..... Max
- Period ..... 1 µs
- Mode ..... Fast Rise

Left plug-in amplifier ..... no settings required
Center plug-in amplifier ..... no settings required

ManualsPlus.com

DSA 601 or DSA 602

Def Wfm ..... touch
L1 ..... touch
Enter Desc ..... touch
Vert Size: L1 ..... 100 mV/div
Vert Offset: L1 ..... –250 mV
Def Wfm ..... touch
C1 ..... touch
Enter Desc ..... touch
Vert Size: C1 ..... 100 mV/div
Vert Offset: C1 ..... –250 mV
TRIGGER button ..... press
Source Desc ..... touch
NOT ..... touch
L1 ..... touch
OR ..... touch
C1 ..... touch
Enter Desc ..... touch
Level A ..... –250 mV
Level B ..... –250 mV
Main Size ..... 2 ns/div
Main Pos ..... center the rising edges

☐ Step 2: *Check* that the rising edge of both waveforms is displayed, and that both waveforms are triggered.

☐ Step 3: Disconnect the cables from the plug-in amplifiers, and then connect the short cable to the center CH 1 input connector and the long cable to the left CH 1 input connector.

☐ Step 4: Touch **Source Desc** in the TRIGGER major menu, and then the following selectors in the **Main Trigger Source Description** pop-up menu:

- **NOT**
- **C1**
- **OR**
- **L1**
- **Enter Desc**

☐ Step 5: *Check* that the rising edge of both waveforms is displayed, and that both waveforms are triggered.

ManualsPlus.com

Setup to Check Boolean Trigger with Center OR Right

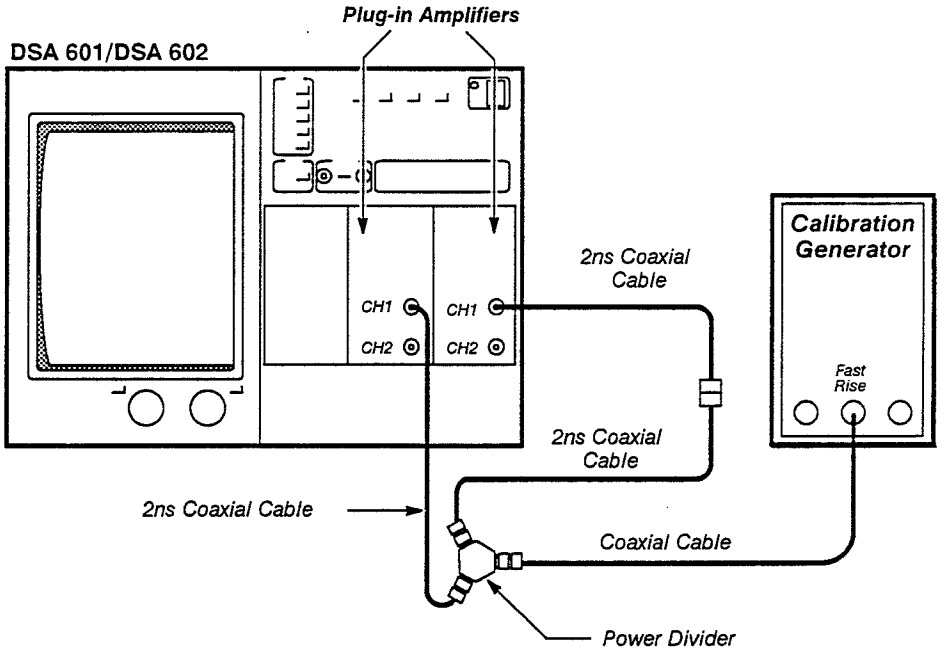

Setup to Check Boolean Trigger with Center OR Right

Procedure to Check Boolean Trigger with Center OR Right

☐ Step 1: **Initialize** the DSA settings, then perform the following settings in the order listed.

Calibration generator
- Pulse Amplitude ..... Max
- Period ..... 1 µs
- Mode ..... Fast Rise

Center plug-in amplifier ..... no settings required

Right plug-in amplifier ..... no settings required

DSA 601 or DSA 602
- **Def Wfm** ..... touch
  - **C1** ..... touch
  - **Enter Desc** ..... touch
- **Vert Size: C1** ..... 100 mV/div
- **Vert Offset: C1** ..... –250 mV
- **Def Wfm** ..... touch
  - **R1** ..... touch
  - **Enter Desc** ..... touch
- **Vert Size: R1** ..... 100 mV/div
- **Vert Offset: R1** ..... –250 mV

ManualsPlus.com

TRIGGER button ..... press
Source Desc ..... touch
NOT ..... touch
C1 ..... touch
OR ..... touch
R1 ..... touch
Enter Desc ..... touch
Level A ..... –250 mV
Level B ..... –250 mV
Main Size ..... 2 ns/div
Main Pos ..... center the rising edges

☐ Step 2: *Check* that the rising edge of both waveforms is displayed, and that both waveforms are triggered.

☐ Step 3: Disconnect the cables from the plug-in amplifiers, and then connect the short cable to the right CH 1 input connector and the long cable to the center CH 1 input connector.

☐ Step 4: Touch **Source Desc** in the TRIGGER major menu, and then the following selectors in the **Main Trigger Source Description** pop-up menu:

- **NOT**
- **R1**
- **OR**
- **C1**
- **Enter Desc**

☐ Step 5: *Check* that the rising edge of both waveforms is displayed and that both waveforms are triggered.

ManualsPlus.com

Setup to Check Boolean Trigger with Left OR Right

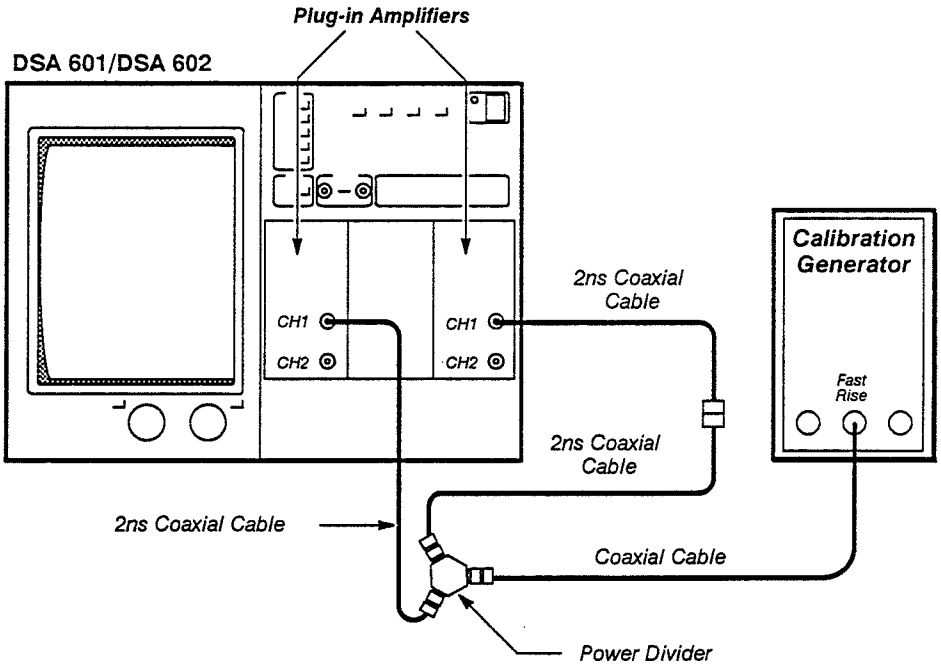

Setup to Check Boolean Trigger with Left OR Right

Procedure to Check Boolean Trigger with Left OR Right

☐ Step 1: **Initialize** the DSA settings, then perform the following settings in the order listed.

Calibration generator
- Pulse Amplitude ..... Max
- Period ..... 1 µs
- Mode ..... Fast Rise

Left plug-in amplifier ..... no settings required

Right plug-in amplifier ..... no settings required

DSA 601 or DSA 602
- **Def Wfm** ..... touch
  - **L1** ..... touch
  - **Enter Desc** ..... touch
- **Vert Size: L1** ..... 100 mV/div
- **Vert Offset: L1** ..... –250 mV
- **Def Wfm** ..... touch
  - **R1** ..... touch
  - **Enter Desc** ..... touch
- **Vert Size: R1** ..... 100 mV/div
- **Vert Offset: R1** ..... –250 mV

ManualsPlus.com

TRIGGER button . . . . . press
Source Desc . . . . . touch
NOT . . . . . touch
L1 . . . . . touch
OR . . . . . touch
R1 . . . . . touch
Enter Desc . . . . . touch
Level A . . . . . –250 mV
Level B . . . . . –250 mV
Main Size . . . . . 2 ns/div
Main Pos . . . . . center the rising edges

☐ Step 2: *Check* that the rising edge of both waveforms is displayed, and that both waveforms are triggered.

☐ Step 3: Disconnect the cables from the plug-in amplifiers, and then connect the short cable to the right CH 1 input connector and the long cable to the left CH 1 input connector.

☐ Step 4: Touch **Source Desc** in the TRIGGER major menu, and then the following selectors in the **Main Trigger Source Description** pop-up menu.

- **NOT**
- **R1**
- **OR**
- **L1**
- **Enter Desc**

☐ Step 5: *Check* that the rising edge of both waveforms is displayed, and that both waveforms are triggered.

ManualsPlus.com

Part 20 Edge Qualified Trigger

This part shows the setup and lists the procedure to check the edge qualified trigger.

Specifications

The specifications for this part are as follows:

- Enable to Edge—the display must trigger if the Enable trigger source is true at least 2 ns before the Edge trigger source. The Enable trigger source is true if its amplitude is greater than its trigger level after the Boolean function is realized.
- Edge to Enable—the display must trigger if the Enable trigger source is true at least 2 ns after the Edge trigger source. The Enable trigger source is true if its amplitude is greater than its trigger level after the Boolean function is realized.
- Setup and Hold time (Edge to itself)—the display must trigger if the Edge trigger source is true at least 2 ns immediately before and after the selected transition. The Edge trigger source is true if its amplitude is greater than its trigger level after the Boolean function is realized.

ManualsPlus.com

Setup to Check Edge Qualified Trigger

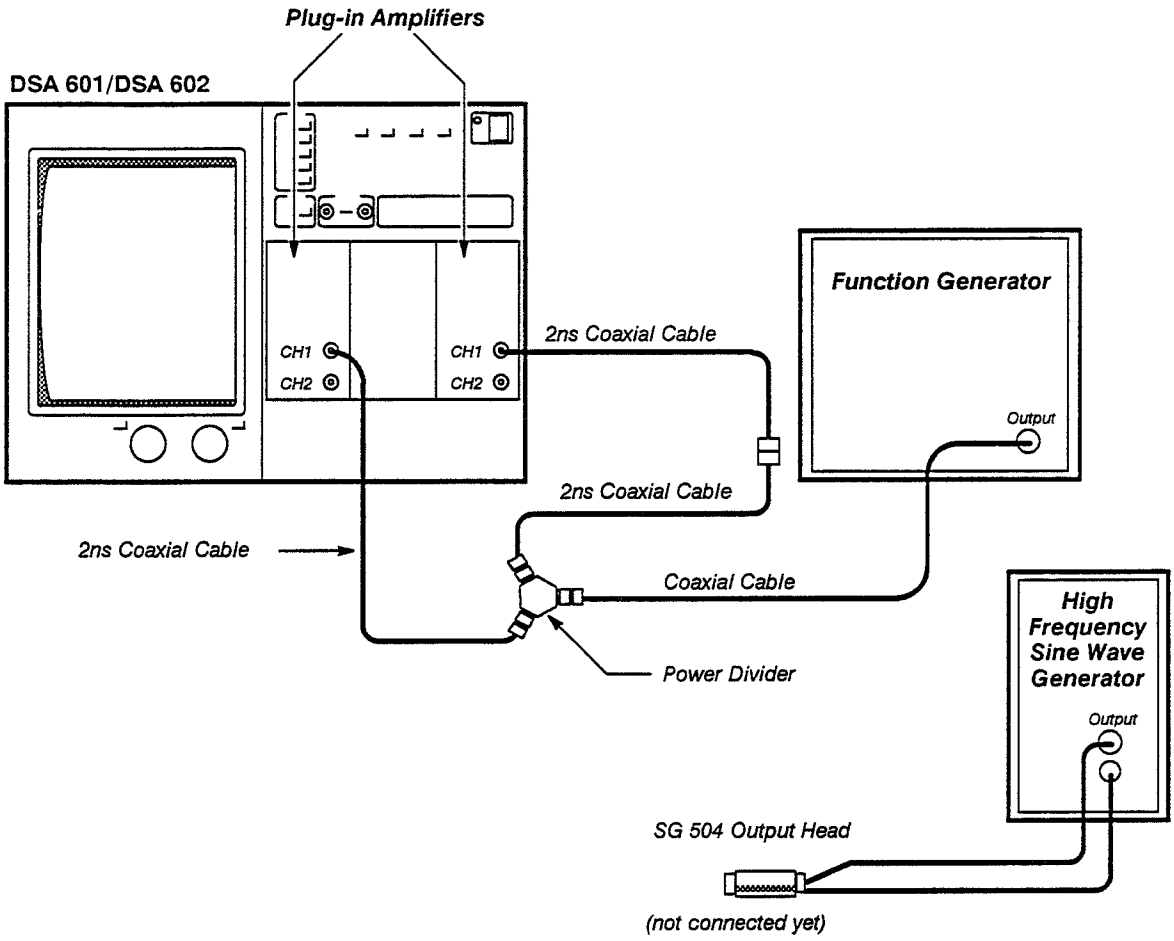

Setup to Check Edge Qualified Trigger

Procedure to Check Edge Qualified Trigger

☐ Step 1: **Initialize** the DSA settings, then perform the following settings in the order listed.

Left plug-in amplifier
- CH 1 display on/off ..... on

DSA 601 or DSA 602
- **Vert Size: L1** ..... 100 mV/div

Right plug-in amplifier
- CH 1 display on/off ..... on

DSA 601 or DSA 602
- **Vert Size: R1** ..... 100 mV/div
- **Main Size** ..... 200 ns/div
- TRIGGER button ..... press
  - **Mode** ..... **Normal**

ManualsPlus.com

Function generator

Function . . . . . Square

Frequency . . . . . 1 MHz

Amplitude . . . . . 1 V p-p

Medium frequency sine wave generator

Function . . . . . 250 MHz

Amplitude . . . . . 0.5 V p-p

☐ Step 2: Touch **Source Desc** in the TRIGGER major menu.

☐ Step 3: Touch the following selectors in the **Main Trigger Source** pop-up menu in the order listed.

- **R1** (Edge trigger source)
- **WHILE**
- **L1** (Enable trigger source)
- **Enter Desc**

☐ Step 4: Set the **Main Pos** so that the two waveforms are approximately centered on the screen.

☐ Step 5: *Check* that the display is triggered.

☐ Step 6: Touch **Source Desc** in the TRIGGER major menu.

☐ Step 7: Touch the following selectors in the **Main Trigger Source** pop-up menu in the order listed.

- **L1** (Edge trigger source)
- **WHILE**
- **NOT**
- **R1** (Enable trigger source)
- **Enter Desc**

☐ Step 8: *Check* that the display is triggered.

☐ Step 9: Reverse the cable connections to the left CH 1 input and the right CH 1 input (that is, connect the short cable to the right CH 1 input and the long cable to the left CH 1 input).

☐ Step 10: Touch **Source Desc** in the TRIGGER major menu.

☐ Step 11: Touch the following selectors in the **Main Trigger Source** pop-up menu in the order listed.

- **L1** (Edge trigger source)
- **WHILE**
- **R1** (Enable trigger source)
- **Enter Desc**

ManualsPlus.com

- ☐ Step 12: *Check* that the display is triggered.
- ☐ Step 13: Touch **Source Desc** in the TRIGGER major menu.
- ☐ Step 14: Touch the following selectors in the **Main Trigger Source** pop-up menu.
  - **R1** (Edge trigger source)
  - **WHILE**
  - **NOT**
  - **L1** (Enable trigger source)
  - **Enter Desc**
- ☐ Step 15: *Check* that the display is triggered.
- ☐ Step 16: Disconnect the cables from the left CH 1 input and the right CH 1 input.
- ☐ Step 17: Connect the high frequency sine wave generator to the left CH 1 input connector.
- ☐ Step 18: Touch **Source Desc** in the TRIGGER major menu.
- ☐ Step 19: Touch the following selectors in the order listed:
  - **L** (Edge trigger source)
  - **WHILE**
  - **R** (Enable trigger source)
  - **Enter Desc**
- ☐ Step 20: Set the **Main Size** to 1 ns/div.
- ☐ Step 21: Touch **Level A Level B** in the TRIGGER major menu.
- ☐ Step 22: Set **Level B** (right knob) to –300 mV.
- ☐ Step 23: *Check* that display is triggered

ManualsPlus.com

Part 21 Maximum Event Frequency

This part shows the setup and lists the steps to check the maximum event frequency.

Specification

The maximum event frequency is 400 MHz at 50% duty cycle.

Setup to Check Maximum Event Frequency

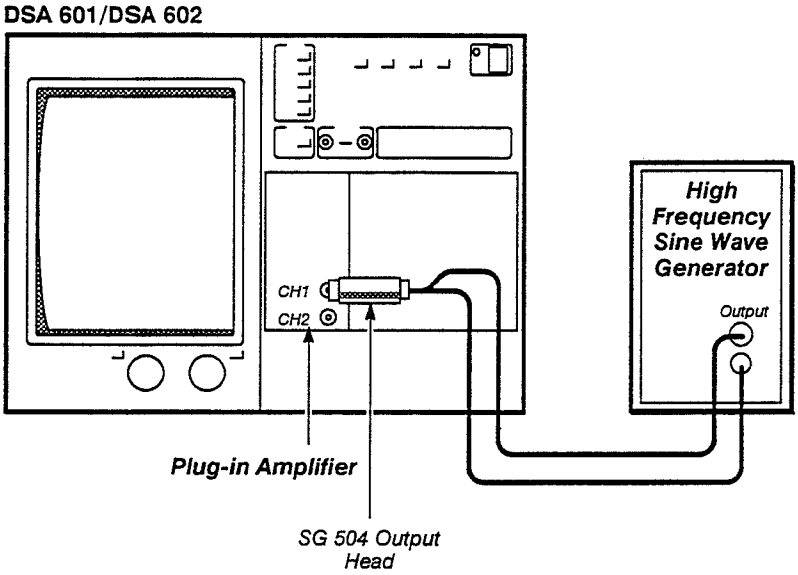

Setup to Check Maximum Event Frequency

Procedure to Check Maximum Event Frequency

☐ Step 1: **Initialize** the DSA settings, then perform the following setting in the order listed.

Plug-in amplifier
- CH 1 display on/off . . . . . on

DSA 601 or DSA 602
- **Main Size** . . . . . 10 ns/div

High frequency sine wave generator
- Frequency . . . . . 400 MHz
- Amplitude . . . . . 4 V p-p

☐ Step 2: Touch the **Window 1** icon at the top of the screen.

☐ Step 3: Set the **Window Size** to 1 ns/div.

☐ Step 4: Press the TRIGGER button, and then set **Trigger Select** to **Window**.

☐ Step 5: Touch **Source Desc** and then **Window Holdoff By Events**.

ManualsPlus.com

- ☐ Step 6: Touch **Events Holdoff** and then set **Events Holdoff** to 15.
- ☐ Step 7: Press the MEASURE button.
- ☐ Step 8: Touch **Measurements** and then **Main → Win Trig Time** in the Measurements pop-up menu.
- ☐ Step 9: *Check* that the **Main → Win Trig Time** is between 38 ns and 42 ns.

ManualsPlus.com

Maintenance

This section contains information for performing preventive maintenance, corrective maintenance, and diagnostic troubleshooting on the DSA 601 and DSA 602 Digitizing Signal Analyzers.

Preventive Maintenance

Performing a regular maintenance program can prevent the DSA from malfunctioning and may improve the reliability of the DSA. The environment in which the DSA operates will determine the frequency of this maintenance. A convenient time for doing preventive maintenance is prior to performing an electrical adjustment.

Removing the Cabinet Panel

WARNING

Dangerous potentials exist at several points throughout the DSA. If you operate the DSA with the covers removed, do not touch exposed connections or components.

Some transistors have voltages present on their cases. Therefore, disconnect the power before cleaning the DSA or replacing any parts.

The top and bottom cabinet covers (or panels) protect you from operating potentials present within the DSA. In addition, the covers reduce radiation of electromagnetic interference from the DSA and protect the interior from dust. If you must remove the covers, then loosen the fasteners and lift the covers off; otherwise operate the DSA with the covers in place.

Cleaning the DSA

The DSA should be cleaned as often as operating conditions require. Dirt present in the DSA can cause overheating and component breakdown. If dirt accumulates on components, it will act as an insulating blanket and prevent efficient heat dissipation. Dirt also provides an electrical conduction path which may cause the DSA to fail.

When cleaning the DSA the side panels reduce the amount of dust that reaches the interior of the DSA. Therefore, keep the side panels in place for safety and cooling as well.

When cleaning the DSA avoid the use of chemical cleaning agents which might damage the plastics used in this DSA.

Exterior—dust on the outside of the DSA can be removed with a soft cloth or small brush. The brush is particularly useful for dislodging dirt in and around the front panel controls. Remove any dirt which remains with a soft cloth dampened in a mild detergent and water solution. Do not use abrasive cleaners.

ManualsPlus.com

CRT—you should clean the CRT faceplate with a soft, lint-free, cloth dampened with denatured alcohol.

Interior—cleaning the interior of the DSA is seldom required. However, cleaning may be necessary if the interior of the DSA accumulates dust or dirt. To clean the interior, blow off the dust with dry, low-velocity air (approximately 5 lb/in^2), and remove any dirt that remains with a soft brush or a cloth dampened with a mild detergent and water solution. Then, use a washcloth dampened with water to remove any residue from areas you cleaned with the solution. You can use a cotton-tipped applicator to clean in narrow spaces or to clean more delicate components.

CAUTION

To prevent damage from electrical shorts, the boards and components must be dry before applying power.

You should in particular, examine the high-voltage circuits. Excessive dirt in these circuit areas may cause high-voltage arcing and result in improper DSA operation.

Visual Inspection

The DSA should be inspected occasionally for defects; such as broken connectors, improperly seated semiconductors, damaged or improperly installed boards, and heat-damaged parts. The corrective procedure for most visible defects is obvious; however, particular care must be taken if heat-damaged parts are found, since overheating usually indicates other trouble in the DSA. Correcting the cause of overheating is important to prevent the damage from recurring.

Periodic Electrical Adjustment

To ensure accurate measurements, check the electrical adjustment of the DSA after each 2,000 hours of operation, or every 24 months if you use the DSA infrequently.

ManualsPlus.com

Corrective Maintenance

Corrective maintenance consists of module and board replacement procedures for repairing the DSA.

Power Supply Voltage Hazard

Use caution if you are working near any metal-faced components in the Power supply module.

WARNING

All metal components, including any metal-faced components, in the Power Supply module should be considered hazardous; since the voltage to these components is supplied by and therefore equivalent to the AC line voltage potential.

Always remove the line power cord before attempting any disassembly procedures.

An electric-shock hazard exists when the DSA is not grounded. Do not remove the ground wire (green-yellow wire) that connects the Power Supply module chassis to the DSA.

Ordering Parts

When ordering replacement parts from Tektronix, Inc., include the following information:

- DSA type
- DSA serial number
- description of the part
- Tektronix part number

ATTENTION

If an FRU (field replaceable unit) being replaced contains firmware, the ***firmware must be removed from the old FRU and installed on the new FRU****. The replacement assemblies (FRUs) will not have any firmware installed from the factory or Module Repair station.*

Static-Sensitive Device Classification

CAUTION

Static discharge can damage any semiconductor component in the DSA.

This DSA contains electrical components that are susceptible to damage from static discharge. Refer to Table 3-1, Relative Susceptibility to Damage from Static Discharge, for the relative susceptibility of various classes of semiconductors. Static voltages of 1 kV to 30 kV are common in unprotected environments.

Observe the following precautions to avoid damage to components:

- Minimize handling of static-sensitive components.
- Transport and store static-sensitive components or assemblies in their original containers, anti-static tube rail, or conductive foam.
- Label any package that contains static-sensitive assemblies or components.

ManualsPlus.com

- Wear a wrist strap while handling these components to discharge the static voltage from your body. Perform servicing of these static-sensitive assemblies or components at a static-free work station (only qualified service personnel should service these components). We recommend using the static control mat. Refer to Table 2-2, for the part numbers of the wrist strap and static control mat.
- Clear the work station surface of anything capable of generating or holding a static charge.
- Whenever possible, store the component leads in conductive foam or rails to keep these leads shorted together.
- Pick up components by the body; never by the leads.
- Do not slide the components over any surface.
- Avoid handling components in areas that have a floor or work-surface covering that can generate a static charge.

***Table 3-1** — Relative Susceptibility to Damage from Static Discharge*

Semiconductor Classes	Relative Susceptibility Levels[1]
MOS or CMOS microcircuits, and discrete or linear microcircuits with MOS inputs (most sensitive)	100 to 500 V
ECL	200 to 500 V
Schottky signal diodes	250 V
Schottky TTL	500 V
High-frequency bipolar transistors	400 to 600 V
JFETs	600 to 800 V
Linear microcircuits	400 to 1000 V
Low-power Schottky TTL	900 V
TTL (least sensitive)	1200 V

[1]Voltage discharged from a 100 pF capacitor through a resistance of 100 Ω.

Removing/Replacing FRUs

The following table should be used as a convenient reference for finding connector and screw locations when removing and replacing field replaceable units (FRUs). The first column in the table lists the FRU to be removed or replaced, and the second column lists the figures that you should reference for the location of connector and screw locations discussed in the procedure to remove/replace this FRU.

ManualsPlus.com

Table 3-2 — FRU Removal/Replacement Figure Cross Reference

FRU to be Removed/ Replaced	Figures to Reference During Removal	Page
Batteries	Figure 3-25 — Removing/Replacing the A14 I/O Board	3-51
	Figure 3-28 — Removing/Replacing the A17 Main Processor Board	3-57
	Figure 3-29 — Removing/Replacing the A18 BB Memory Board	3-59
Cathode Ray Tube (CRT)	Figure 3-1 — Field Replaceable Units (FRU) Locator	3-10
	Figure 3-2 — Removing/Replacing the CRT Shield	3-15
	Figure 3-3 — Removing/Replacing the CRT Faceplate Torx Head Screws	3-16
	Figure 3-4 — Removing/Replacing the CRT	3-18
	Figure 3-5 — Removing/Replacing the Left Side Frame Section and Raising the Platform	3-19
	Figure 3-6 — Removing/Replacing the Degauss Coils	3-20
	Figure 3-19 — Removing/Replacing the A9 Touch Panel Assembly Torx Head Screws	3-40
	Figure 3-20 — Removing/Replacing the A9 Touch Panel Assembly	3-41
	Figure 3-34 — Removing/Replacing the A24 CRT Driver Board	3-66
	Figure 3-35 — Removing/Replacing the A25 Degauss Board	3-67
	Figure 3-42 — Multi-Pin Connector Orientation	3-86
Fan Motors	Figure 3-1 — Field Replaceable Units (FRU) Locator	3-10
	Figure 3-5 — Removing/Replacing the Left Side Frame Section and Raising the Platform	3-19
	Figure 3-7 — Removing/Replacing the Fan Motors	3-22
Power Supply Module	Figure 3-1 — Field Replaceable Units (FRU) Locator	3-10
	Figure 3-8 — Removing/Replacing the Power Supply Module	3-24
	Figure 3-9 — A2A2 Control Rectifier Board Connector Locations	3-25
	Figure 3-42 — Multi-Pin Connector Orientation	3-86
A1 Plug-in Interface board	Figure 3-1 — Field Replaceable Units (FRU) Locator	3-10
	Figure 3-5 — Removing/Replacing the Left Side Frame Section and Raising the Platform	3-19
	Figure 3-10 — Top View of the Card Cage	3-26
	Figure 3-11 — Plug-in Interface Connector Receptacles Torx Head Screws Location	3-29
	Figure 3-12 — Removing/Replacing the A1 Plug-in Interface Board	3-30
	Figure 3-13 — Removing/Replacing the A4 Regulator Board	3-31
	Figure 3-16 — Removing/Replacing the A6 Lower Acquisition Board	3-35
	Figure 3-17 — Removing/Replacing the A7 Upper Acquisition Board	3-37
	Figure 3-18 — Removing/Replacing the A8 Waveform Processor (Signal Processor) Board	3-39
	Figure 3-30 — Removing/Replacing the A19 Digitizer CPU Board	3-61
	Figure 3-42 — Multi-Pin Connector Orientation	3-86
A4 Regulator board	Figure 3-1 — Field Replaceable Units (FRU) Locator	3-10
	Figure 3-13 — Removing/Replacing the A4 Regulator Board	3-31
	Figure 3-42 — Multi-Pin Connector Orientation	3-86

ManualsPlus.com

***Table 3-2** — FRU Removal/Replacement Figure Cross Reference (Cont.)*

FRU to be Removed/ Replaced	Figures to Reference During Removal	Page
A5 Calibrator board	Figure 3-1 — Field Replaceable Units (FRU) Locator	3-10
	Figure 3-5 — Removing/Replacing the Left Side Frame Section and Raising the Platform	3-19
	Figure 3-11 — Plug-in Interface Connector Receptacles Torx Head Screws Location	3-29
	Figure 3-14 — Removing/Replacing the Front Panel Calibrator's $^1/_4$-Inch Nuts	3-32
	Figure 3-15 — Removing/Replacing the A5 Calibrator Board	3-33
	Figure 3-42 — Multi-Pin Connector Orientation	3-86
A6 Lower Acquisition board	Figure 3-1 — Field Replaceable Units (FRU) Locator	3-10
	Figure 3-5 — Removing/Replacing the Left Side Frame Section and Raising the Platform	3-19
	Figure 3-16 — Removing/Replacing the A6 Lower Acquisition Board	3-35
	Figure 3-42 — Multi-Pin Connector Orientation	3-86
A7 Upper Acquisition board	Figure 3-1 — Field Replaceable Units (FRU) Locator	3-10
	Figure 3-17 — Removing/Replacing the A7 Upper Acquisition Board	3-37
	Figure 3-42 — Multi-Pin Connector Orientation	3-86
A8 Waveform Processor board or A8 Signal Processor board	Figure 3-1 — Field Replaceable Units (FRU) Locator	3-10
	Figure 3-18 — Removing/Replacing the A8 Waveform Processor (Signal Processor) Board	3-39
	Figure 3-42 — Multi-Pin Connector Orientation	3-86
A9 Touch Panel Assembly	Figure 3-1 — Field Replaceable Units (FRU) Locator	3-10
	Figure 3-19 — Removing/Replacing the A9 Touch Panel Assembly Torx Head Screws	3-40
	Figure 3-20 — Removing/Replacing the A9 Touch Panel Assembly	3-41
	Figure 3-42 — Multi-Pin Connector Orientation	3-86
A10 Front Panel Control board	Figure 3-1 — Field Replaceable Units (FRU) Locator	3-10
	Figure 3-2 — Removing/Replacing the CRT Shield	3-15
	Figure 3-5 — Removing/Replacing the Left Side Frame Section and Raising the Platform	3-19
	Figure 3-21 — Removing/Replacing the A10 Front Panel Control Board	3-43
	Figure 3-42 — Multi-Pin Connector Orientation	3-86
A11 Front Panel Button board	Figure 3-1 — Field Replaceable Units (FRU) Locator	3-10
	Figure 3-2 — Removing/Replacing the CRT Shield	3-15
	Figure 3-5 — Removing/Replacing the Left Side Frame Section and Raising the Platform	3-19
	Figure 3-21 — Removing/Replacing the A10 Front Panel Control Board	3-43
	Figure 3-22 — Removing/Replacing the A11 Front Panel Button Board	3-45
	Figure 3-42 — Multi-Pin Connector Orientation	3-86
A12 Rear Panel Assembly	Figure 3-1 — Field Replaceable Units (FRU) Locator	3-10
	Figure 3-8 — Removing/Replacing the Power Supply Module	3-24
	Figure 3-23 — Removing/Replacing the A12 Rear Panel Assembly	3-47
	Figure 3-42 — Multi-Pin Connector Orientation	3-86

ManualsPlus.com

Table 3-2 — FRU Removal/Replacement Figure Cross Reference (Cont.)

FRU to be Removed/ Replaced	Figures to Reference During Removal	Page
A13 Mother board	Figure 3-1 — Field Replaceable Units (FRU) Locator	3-10
	Figure 3-5 — Removing/Replacing the Left Side Frame Section and Raising the Platform	3-19
	Figure 3-10 — Top View of the Card Cage	3-26
	Figure 3-24 — Removing/Replacing the A13 Mother Board	3-49
	Figure 3-25 — Removing/Replacing the A14 I/O Board	3-51
	Figure 3-26 — Removing/Replacing the A15 MMU Board	3-53
	Figure 3-27 — Removing/Replacing the A16 Display Controller Board	3-55
	Figure 3-28 — Removing/Replacing the A17 Main Processor Board	3-57
	Figure 3-29 — Removing/Replacing the A18 BB Memory Board	3-59
	Figure 3-30 — Removing/Replacing the A19 Digitizer CPU Board	3-61
	Figure 3-31 — Removing/Replacing the A20 Digitizer I/O Board	3-63
	Figure 3-42 — Multi-Pin Connector Orientation	3-86
A14 Input/Output (I/O) board	Figure 3-1 — Field Replaceable Units (FRU) Locator	3-10
	Figure 3-5 — Removing/Replacing the Left Side Frame Section and Raising the Platform	3-19
	Figure 3-10 — Top View of the Card Cage	3-26
	Figure 3-25 — Removing/Replacing the A14 I/O Board	3-51
	Figure 3-30 — Removing/Replacing the A19 Digitizer CPU Board	3-61
	Figure 3-31 — Removing/Replacing the A20 Digitizer I/O Board	3-63
	Figure 3-42 — Multi-Pin Connector Orientation	3-86
A15 Memory Management Unit (MMU) board	Figure 3-1 — Field Replaceable Units (FRU) Locator	3-10
	Figure 3-5 — Removing/Replacing the Left Side Frame Section and Raising the Platform	3-19
	Figure 3-10 — Top View of the Card Cage	3-26
	Figure 3-25 — Removing/Replacing the A14 I/O Board	3-51
	Figure 3-26 — Removing/Replacing the A15 MMU Board	3-53
	Figure 3-30 — Removing/Replacing the A19 Digitizer CPU Board	3-61
	Figure 3-31 — Removing/Replacing the A20 Digitizer I/O Board	3-63
	Figure 3-42 — Multi-Pin Connector Orientation	3-86
A16 Display Controller board	Figure 3-1 — Field Replaceable Units (FRU) Locator	3-10
	Figure 3-5 — Removing/Replacing the Left Side Frame Section and Raising the Platform	3-19
	Figure 3-10 — Top View of the Card Cage	3-26
	Figure 3-25 — Removing/Replacing the A14 I/O Board	3-51
	Figure 3-27 — Removing/Replacing the A16 Display Controller Board	3-55
	Figure 3-30 — Removing/Replacing the A19 Digitizer CPU Board	3-61
	Figure 3-31 — Removing/Replacing the A20 Digitizer I/O Board	3-63
	Figure 3-42 — Multi-Pin Connector Orientation	3-86
A17 Main Processor board	Figure 3-1 — Field Replaceable Units (FRU) Locator	3-10
	Figure 3-5 — Removing/Replacing the Left Side Frame Section and Raising the Platform	3-19
	Figure 3-10 — Top View of the Card Cage	3-26
	Figure 3-25 — Removing/Replacing the A14 I/O Board	3-51
	Figure 3-28 — Removing/Replacing the A17 Main Processor Board	3-57
	Figure 3-30 — Removing/Replacing the A19 Digitizer CPU Board	3-61
	Figure 3-31 — Removing/Replacing the A20 Digitizer I/O Board	3-63
	Figure 3-42 — Multi-Pin Connector Orientation	3-86

ManualsPlus.com

Table 3-2 — FRU Removal/Replacement Figure Cross Reference (Cont.)

FRU to be Removed/ Replaced	Figures to Reference During Removal	Page
A18 BB Memory board	Figure 3-1 — Field Replaceable Units (FRU) Locator	3-10
	Figure 3-5 — Removing/Replacing the Left Side Frame Section and Raising the Platform	3-19
	Figure 3-10 — Top View of the Card Cage	3-26
	Figure 3-25 — Removing/Replacing the A14 I/O Board	3-51
	Figure 3-29 — Removing/Replacing the A18 BB Memory Board	3-59
	Figure 3-30 — Removing/Replacing the A19 Digitizer CPU Board	3-61
	Figure 3-31 — Removing/Replacing the A20 Digitizer I/O Board	3-63
	Figure 3-42 — Multi-Pin Connector Orientation	3-86
A19 Digitizer CPU board	Figure 3-1 — Field Replaceable Units (FRU) Locator	3-10
	Figure 3-5 — Removing/Replacing the Left Side Frame Section and Raising the Platform	3-19
	Figure 3-10 — Top View of the Card Cage	3-26
	Figure 3-30 — Removing/Replacing the A19 Digitizer CPU Board	3-61
	Figure 3-42 — Multi-Pin Connector Orientation	3-86
A20 Digitizer I/O board	Figure 3-1 — Field Replaceable Units (FRU) Locator	3-10
	Figure 3-5 — Removing/Replacing the Left Side Frame Section and Raising the Platform	3-19
	Figure 3-10 — Top View of the Card Cage	3-26
	Figure 3-30 — Removing/Replacing the A19 Digitizer CPU Board	3-61
	Figure 3-31 — Removing/Replacing the A20 Digitizer I/O Board	3-63
	Figure 3-42 — Multi-Pin Connector Orientation	3-86
A21 Mini Mother board	Figure 3-1 — Field Replaceable Units (FRU) Locator	3-10
	Figure 3-5 — Removing/Replacing the Left Side Frame Section and Raising the Platform	3-19
	Figure 3-10 — Top View of the Card Cage	3-26
	Figure 3-25 — Removing/Replacing the A14 I/O Board	3-51
	Figure 3-30 — Removing/Replacing the A19 Digitizer CPU Board	3-61
	Figure 3-31 — Removing/Replacing the A20 Digitizer I/O Board	3-63
	Figure 3-32 — Removing/Replacing the A21 Mini Mother Board	3-64
	Figure 3-42 — Multi-Pin Connector Orientation	3-86
A24 CRT Driver board	Figure 3-1 — Field Replaceable Units (FRU) Locator	3-10
	Figure 3-4 — Removing/Replacing the CRT	3-18
	Figure 3-5 — Removing/Replacing the Left Side Frame Section and Raising the Platform	3-19
	Figure 3-33 — Removing/Replacing the CRT Driver Board Trap Door Torx Head Screws	3-66
	Figure 3-34 — Removing/Replacing the A24 CRT Driver Board	3-66
	Figure 3-42 — Multi-Pin Connector Orientation	3-86
A25 Degauss board	Figure 3-1 — Field Replaceable Units (FRU) Locator	3-10
	Figure 3-19 — Removing/Replacing the A9 Touch Panel Assembly Torx Head Screws	3-40
	Figure 3-20 — Removing/Replacing the A9 Touch Panel Assembly	3-41
	Figure 3-35 — Removing/Replacing the A25 Degauss Board	3-67
	Figure 3-42 — Multi-Pin Connector Orientation	3-86

ManualsPlus.com

Table 3-2 — FRU Removal/Replacement Figure Cross Reference (Cont.)

FRU to be Removed/ Replaced	Figures to Reference During Removal	Page
A26 Geometry board	Figure 3-1 — Field Replaceable Units (FRU) Locator	3-10
	Figure 3-2 — Removing/Replacing the CRT Shield	3-15
	Figure 3-5 — Removing/Replacing the Left Side Frame Section and Raising the Platform	3-19
	Figure 3-36 — Removing/Replacing the A26 Geometry Board	3-69
	Figure 3-42 — Multi-Pin Connector Orientation	3-86
A27 CRT Socket board	Figure 3-1 — Field Replaceable Units (FRU) Locator	3-10
	Figure 3-2 — Removing/Replacing the CRT Shield	3-15
	Figure 3-3 — Removing/Replacing the CRT Faceplate Torx Head Screws	3-16
	Figure 3-4 — Removing/Replacing the CRT	3-18
	Figure 3-5 — Removing/Replacing the Left Side Frame Section and Raising the Platform	3-19
	Figure 3-19 — Removing/Replacing the A9 Touch Panel Assembly Torx Head Screws	3-40
	Figure 3-20 — Removing/Replacing the A9 Touch Panel Assembly	3-41
	Figure 3-34 — Removing/Replacing the A24 CRT Driver Board	3-66
	Figure 3-35 — Removing/Replacing the A25 Degauss Board	3-67
	Figure 3-37 — Removing/Replacing the A27 CRT Socket Board	3-70
	Figure 3-42 — Multi-Pin Connector Orientation	3-86

Electrical Lock-On of the Front Panel ON/STANDBY Power Switch

Some applications of the DSA may require that the power remain on. To electrically lock the power on, use the following procedure:

- ☐ Step 1: Switch the rear panel PRINCIPAL POWER SWITCH to OFF.
- ☐ Step 2: Remove the AC power cable.
- ☐ Step 3: Position the DSA on its left (handle) side.
- ☐ Step 4: Remove the bottom cover.
- ☐ Step 5: Locate the A4 Regulator board.
- ☐ Step 6: Locate the J820 jumper on the A4 Regulator board (see Fig. 3-13).
- ☐ Step 7: Without dropping the jumper, reposition the J820 jumper from its two rear pins to its two front pins.
- ☐ Step 8: Replace the bottom cover.
- ☐ Step 9: Turn the DSA in the upright position.
- ☐ Step 10: Reconnect the AC power cable, and switch the PRINCIPAL POWER SWITCH to ON.

  The power will now remain on regardless of the setting of the ON/STANDBY power switch.

ManualsPlus.com

☐ Step 11: To turn the power off while the ON/STANDBY power switch is disabled, use the PRINCIPAL POWER SWITCH.

To return the ON/STANDBY power switch to normal operation, perform steps 1 through 6. Then position the J820 jumper from the two front pins to the two rear pins. Finally, proceed through Steps 8, 9, and 10.

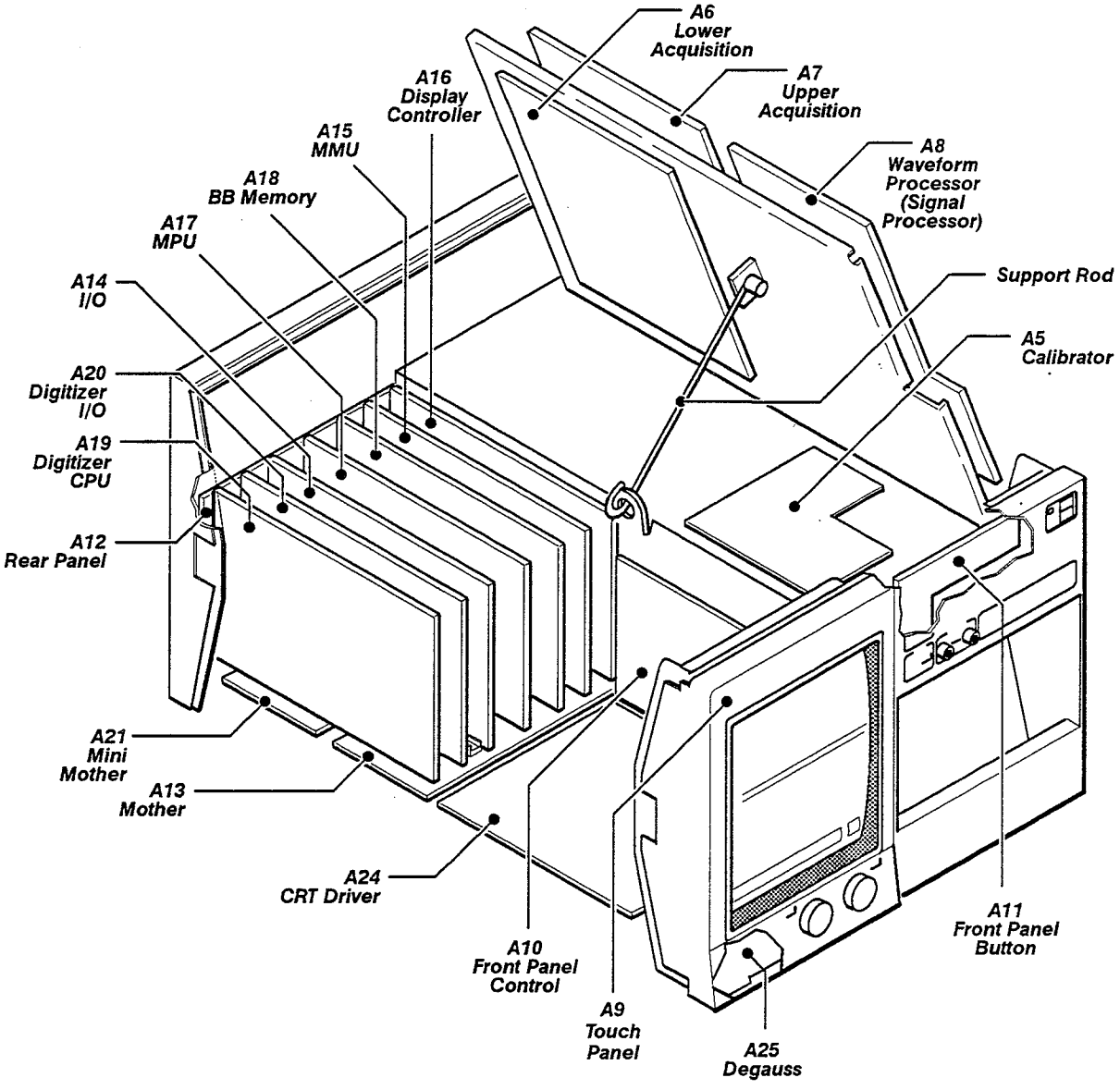

Figure 3-1 — Field Replaceable Units (FRU) Locator

ManualsPlus.com

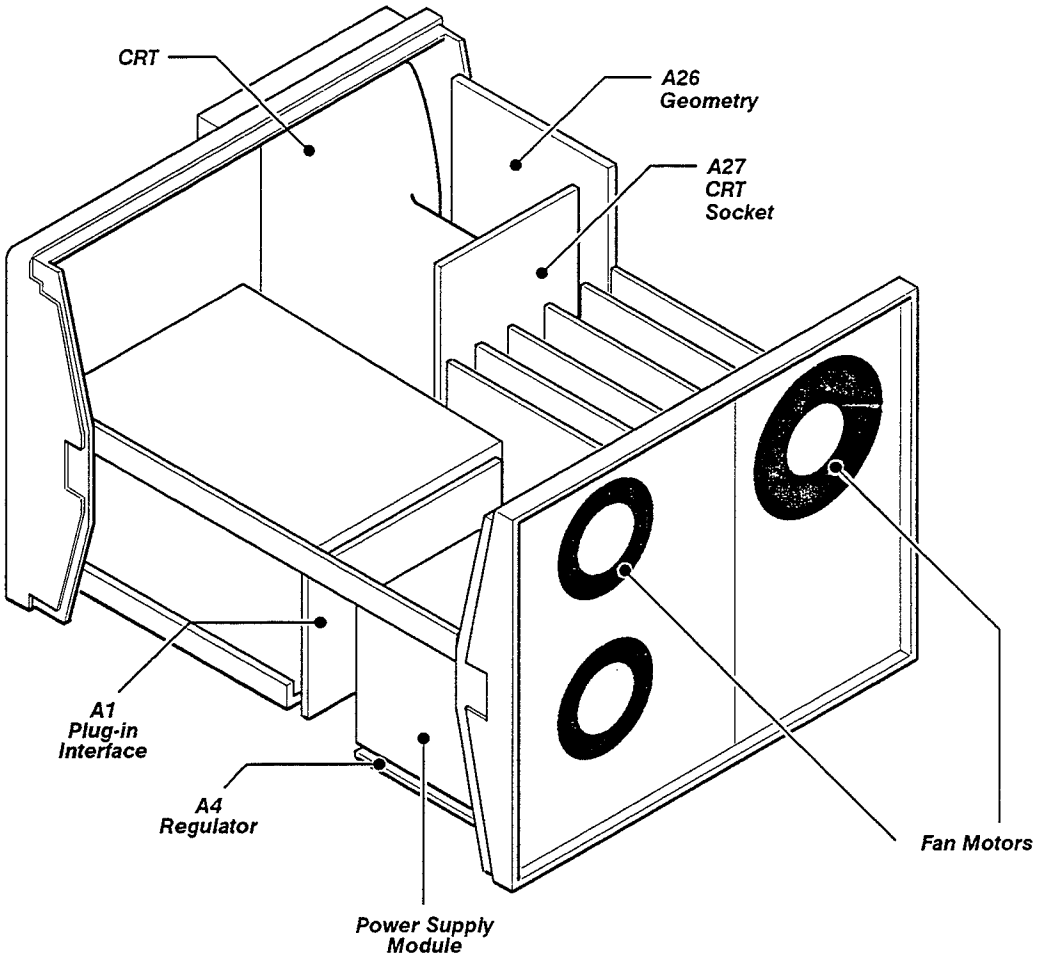

Figure 3-1 — *Field Replaceable Units (FRU) Locator (Cont.)*

ManualsPlus.com

Battery Disposal and First Aid

The DSA contains the following number of batteries on the following boards:

- one battery (BT130) on the A14 I/O board
- one battery (BT160) on the A17 Main Processor board
- one battery (BT150) on the A18 BB Memory board (Option 4C only)

See Figures 3-24, 3-28 and 3-29 for the location of these batteries.

WARNING

To avoid personal injury, observe the proper procedures for the handling of lithium batteries. ***Improper handling may cause fire, explosion, or severe burns.*** *Do not recharge, crush, disassemble, heat above 100°C (212°F), incinerate, or expose to water the battery's contents or the battery itself.*

Dispose of the Battery—according to local, state and federal regulations.

Note: *Typically, you can safely dispose small quantities (less than 20) of batteries along with ordinary garbage in a sanitary landfill.*

You must send larger quantities by surface transport to a hazardous waste disposal facility. The batteries should be individually packaged to prevent shorting. Then, pack them in a sturdy container that is clearly labeled, ***Lithium Batteries — DO NOT OPEN.***

Emergency and first aid information—for lithium batteries.

- **Manufacturer:** Panasonic
- **Battery Type:** Lithium Poly-Carbon monoflouride, BR 2/3 A
- **Solvent** (electrolyte): Gama Butyrlactone is of low toxicity. It can cause some eye and respiratory irritation. According to the manufacturer, the solvent potentially could be released during venting. (Venting is an out gassing of battery material.) Short circuiting (for more than a few seconds) or overheating usually causes venting.
- **Solute:** LIBF4

ManualsPlus.com

Table 3-3, Emergency Procedures, lists the procedures to perform if you come in contact with battery solvent.

Table 3-3 — Emergency Procedures

Contact	Do This
Skin	Wash promptly with plenty of water.
Eyes	Flush immediately with plenty of water, and use an emergency eye wash, if available. Report to a medical professional for treatment
Inhalation	Leave the area, and get fresh area. Report to a medical professional for treatment.
Ingestion	Non-toxic according to laboratory testing. However, report to a medical professional for advice.

In case of venting, clear the immediate area. Usually, venting will only last a few seconds.

ManualsPlus.com

Cathode Ray Tube (CRT) Removal/Replacement

WARNING

The cathode ray tube (CRT) may retain a dangerous electrical charge (21 kV). Before removing the CRT, you must fully discharge the anode. Short the anode from the CRT to the chassis. Wait approximately ten minutes, and again firmly short the anode to the chassis. Then, remove the CRT.

Use extreme care when handling the CRT. If the CRT breaks, the glass fragments scatter at a high velocity (implosion). Therefore, you should wear protective clothing and safety glasses. Avoid striking the CRT on any object which might cause it to crack or implode. When storing a CRT, place the CRT in a protective carton; or, set the CRT face down in a protected location with a smooth surface and with the CRT faceplate on a soft mat.

See Figures 3-1, 3-2, 3-3, 3-4, 3-5, 3-6, 3-19, 3-20, 3-34, 3-35, and 3-42 for connector, screw and index locations.

Remove and Replace the CRT as follows:

- ☐ Step 1: Remove the A9 Touch Panel Assembly.
- ☐ Step 2: Fold the J73 connector into the left plug-in compartment. This ensures that the connector will be accessible when reinstalling the A9 Touch Panel Assembly.
- ☐ Step 3: Remove the six Torx head screws that secure the platform to the sides of the DSA.
- ☐ Step 4: Remove the two Torx head screws that are located on the top of the platform.
- ☐ Step 5: Raise the platform on its hinges, and then secure the platform with the support rod (refer to the instructions on the bottom of the platform).

  Note: *Always support the platform with the support rod when the platform is in the raised position.*

- ☐ Step 6: Remove the ten Torx head screws that secure the CRT shield to the chassis.
- ☐ Step 7: Push the CRT shield towards the rear of the DSA, and then lift the CRT shield out of the chassis.
- ☐ Step 8: Remove the two J32 connectors from the A25 Degauss board.
- ☐ Step 9: Remove the front and rear decorative trim covers from the left side of the DSA (as viewed from the front of the DSA).

CAUTION

Do not lift the trim covers to remove them; doing so will break the trim covers. There is a clip on the inside of the trim cover which slides over the end of the frame section. To remove the trim covers properly, and prevent breakage of these covers, move each cover towards the end of the DSA. (The front cover moves forward and the rear cover moves towards the rear of the DSA.) Move the cover about $^1/_8$-inch to release the cover, and then, remove the cover from the DSA.

ManualsPlus.com

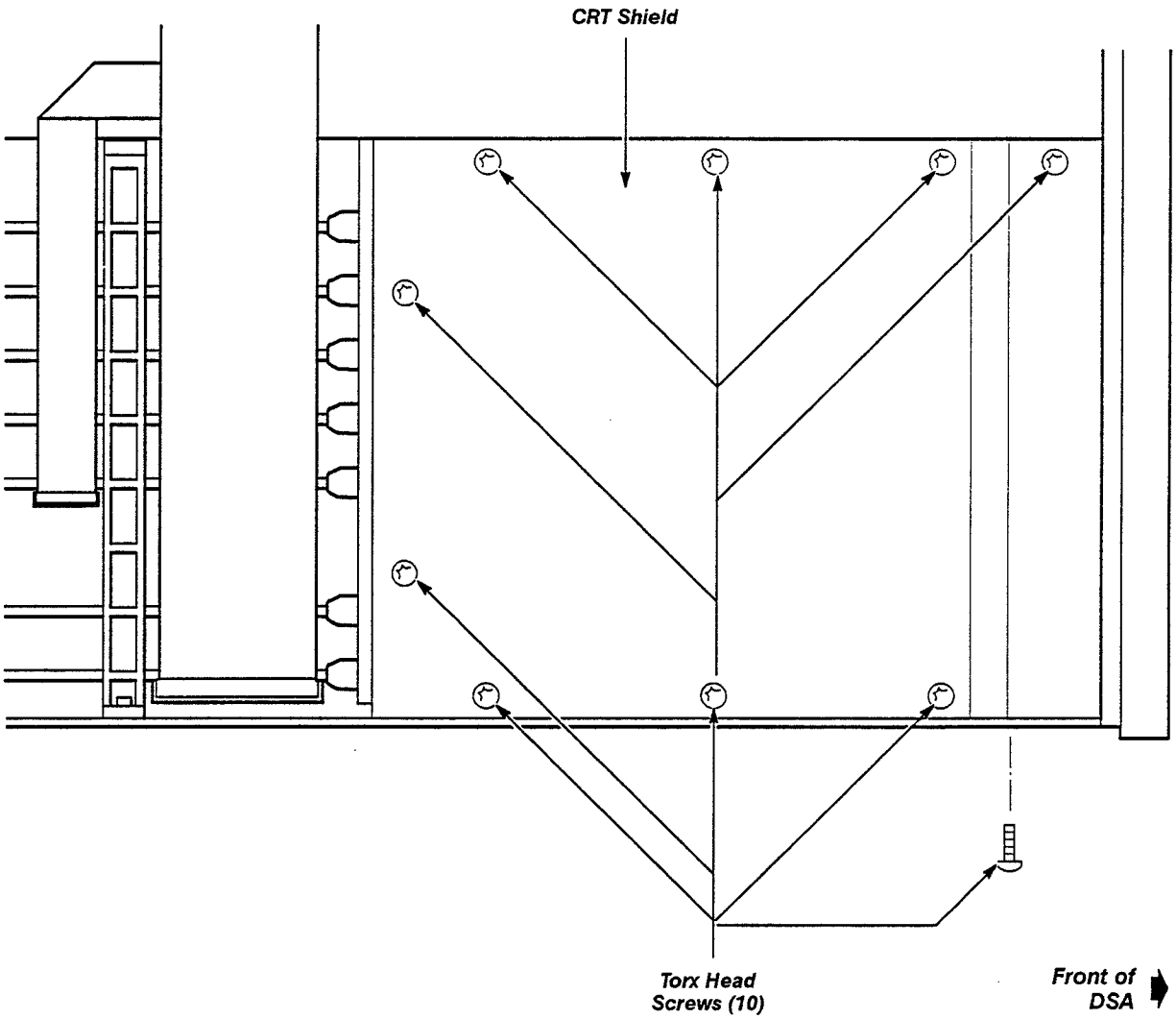

Figure 3-2 — Removing/Replacing the CRT Shield

☐ Step 10: Remove the four Torx head screws that secure the left frame section, and then remove the left frame section.

☐ Step 11: Use a non-conducting tool to pry up the anode lead cup. The anode lead cap is accessed through the circular opening in the left side of the chassis. Release the spring clip inside the cap to remove the anode lead.

WARNING

A stored charge can accumulate in the CRT after the anode lead is removed. To eliminate this stored charge, insert one blade of a needle-nose pliers in the small hole referred to in Step 11 and ground the other blade to the DSA chassis.

☐ Step 12: Remove the four Torx head screws at each corner of the CRT faceplate.

CAUTION

Support the front of the CRT when removing the final screws. Handle the CRT with extreme care when performing the following steps.

ManualsPlus.com

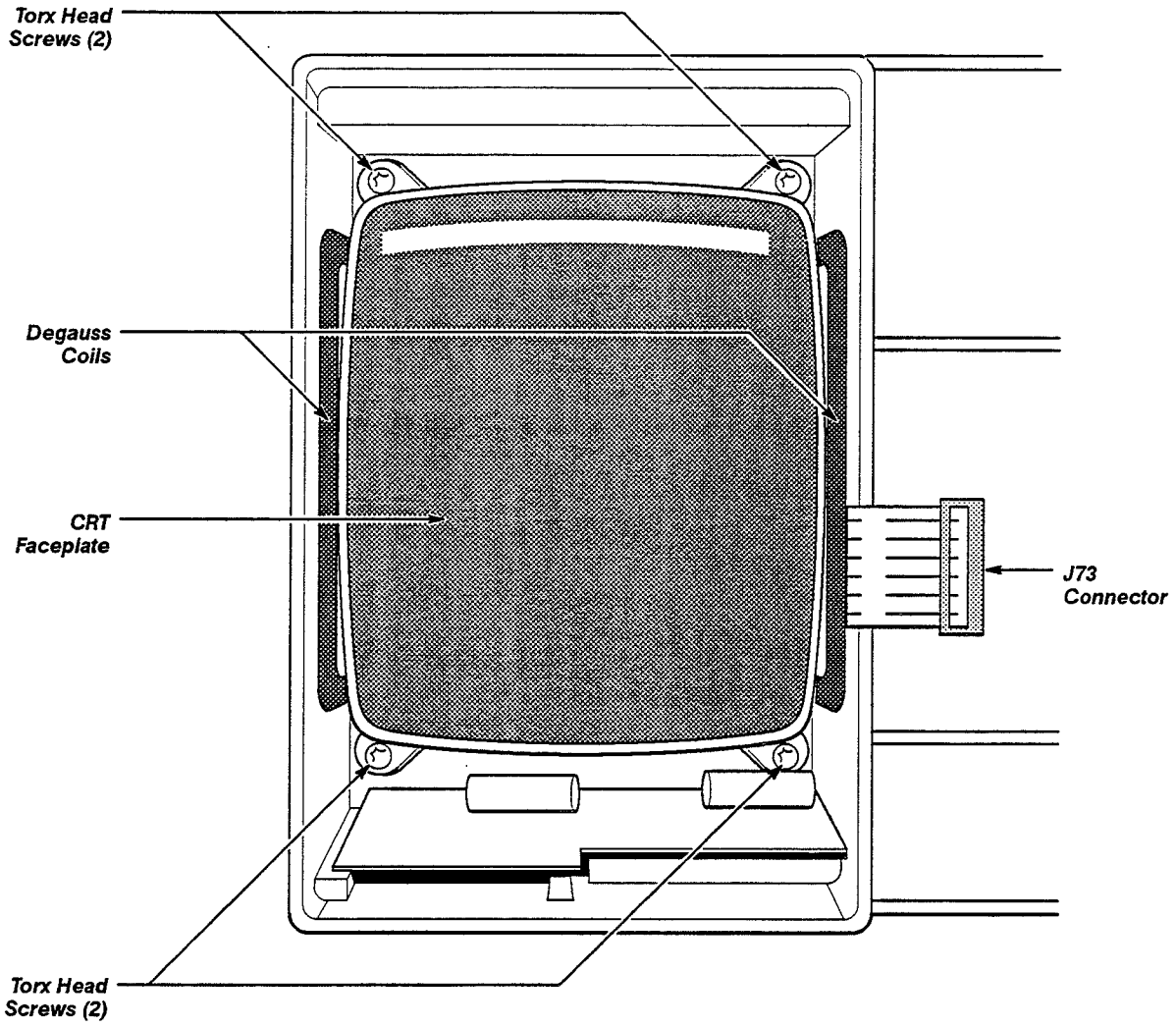

Figure 3-3 — Removing/Replacing the CRT Faceplate Torx Head Screws

☐ Step 13: Pull the CRT partially out of the chassis. While firmly supporting the front of the CRT, carefully unplug the rear of the CRT from the A27 CRT Socket board.

Note: *The CRT is now loose in the chassis. Take care to ensure that you support the CRT for the remaining steps.*

☐ Step 14: Disconnect the J40 connector from the A24 CRT Driver board. Note the position of the multi-pin connector's index triangles to ensure that you can correctly replace these connectors.

☐ Step 15: Carefully remove the CRT and the attached Degauss coils.

☐ Step 16: Carefully note how the Degauss coils are attached to the sides of the CRT.

☐ Step 17: Cut the four cable ties that secure the Degauss coils to the sides of the CRT, then remove the Degauss coils.

ManualsPlus.com

Note: *When you replace the Degauss coils, position the cable clamps as noted in step 16. Then, tighten the clamps so that you can rotate the clamps around the Degauss coils. This ensures that you can position the clamps when you replace the CRT.*

To replace the CRT, perform the previous steps in the reverse process.

Note: *Before inserting the CRT into the chassis, ensure that all wires and wire harnesses are behind the metal ground clips and, that all of the ground clips are connected to the CRT.*

After you replace the CRT, you must readjust the CRT. Refer to Checks After FRU Replacement for more information on this readjustment.

ManualsPlus.com

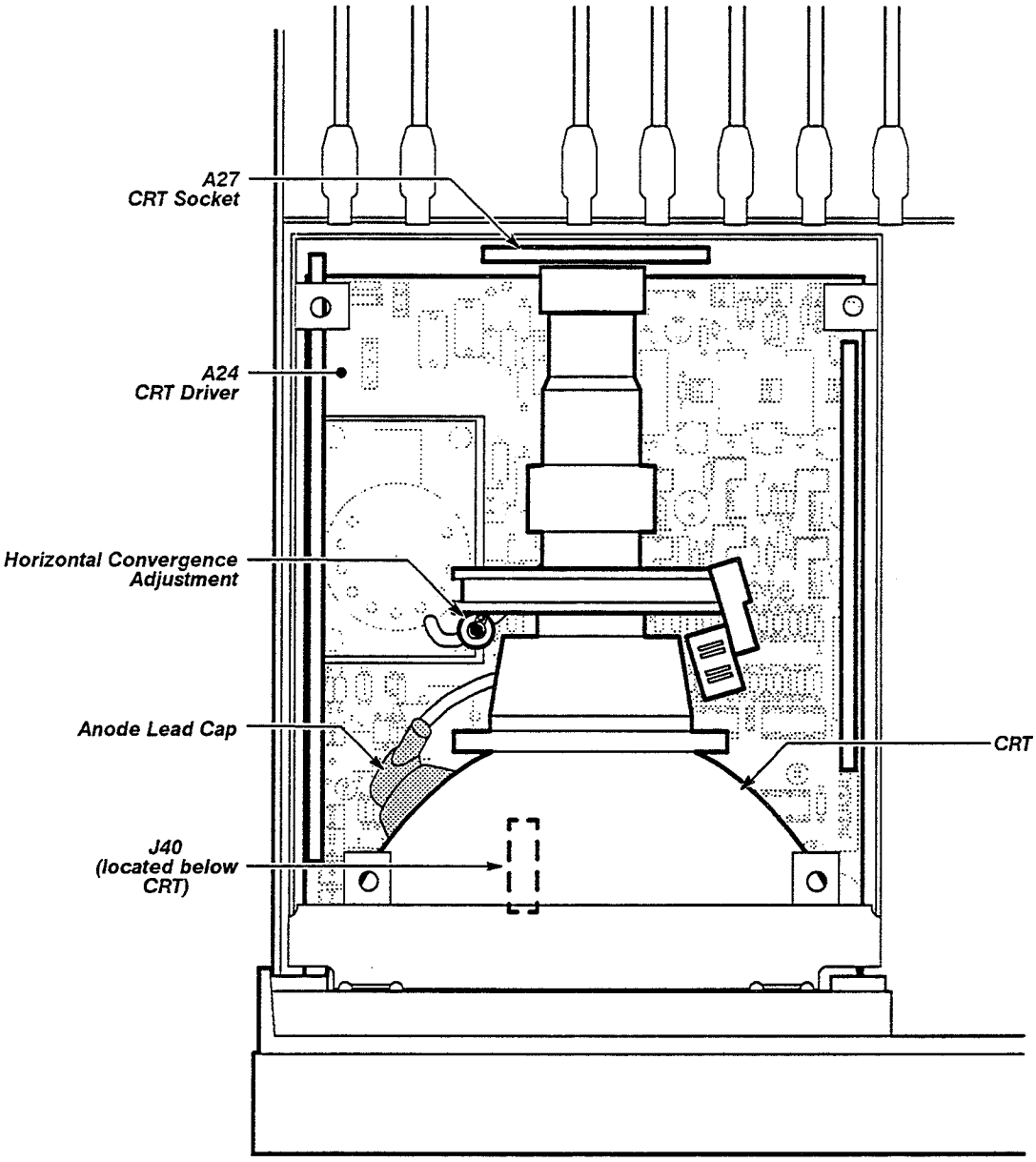

Figure 3-4 — *Removing/Replacing the CRT*

ManualsPlus.com

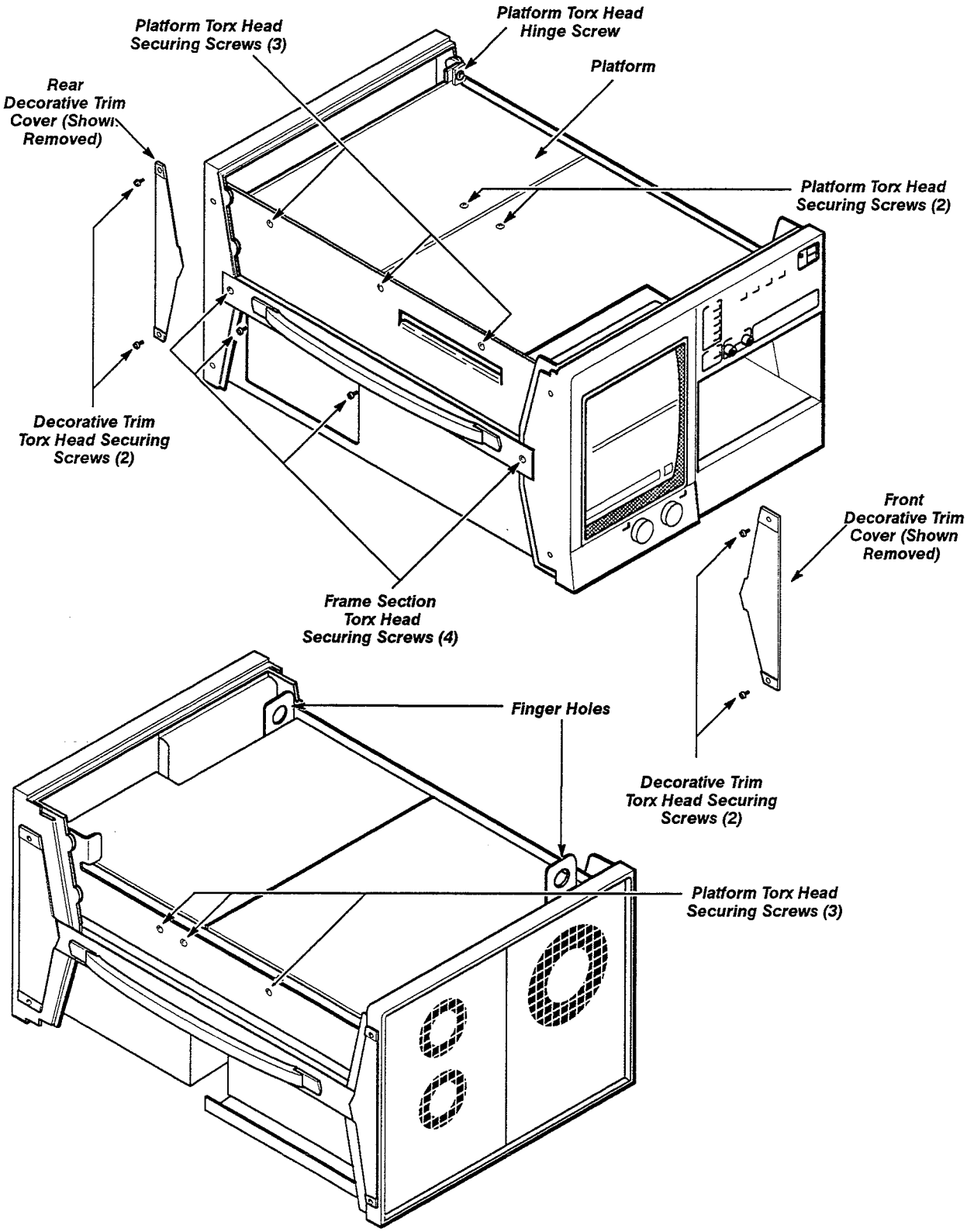

Figure 3-5 — *Removing/Replacing the Left Side Frame Section and Raising the Platform*

ManualsPlus.com

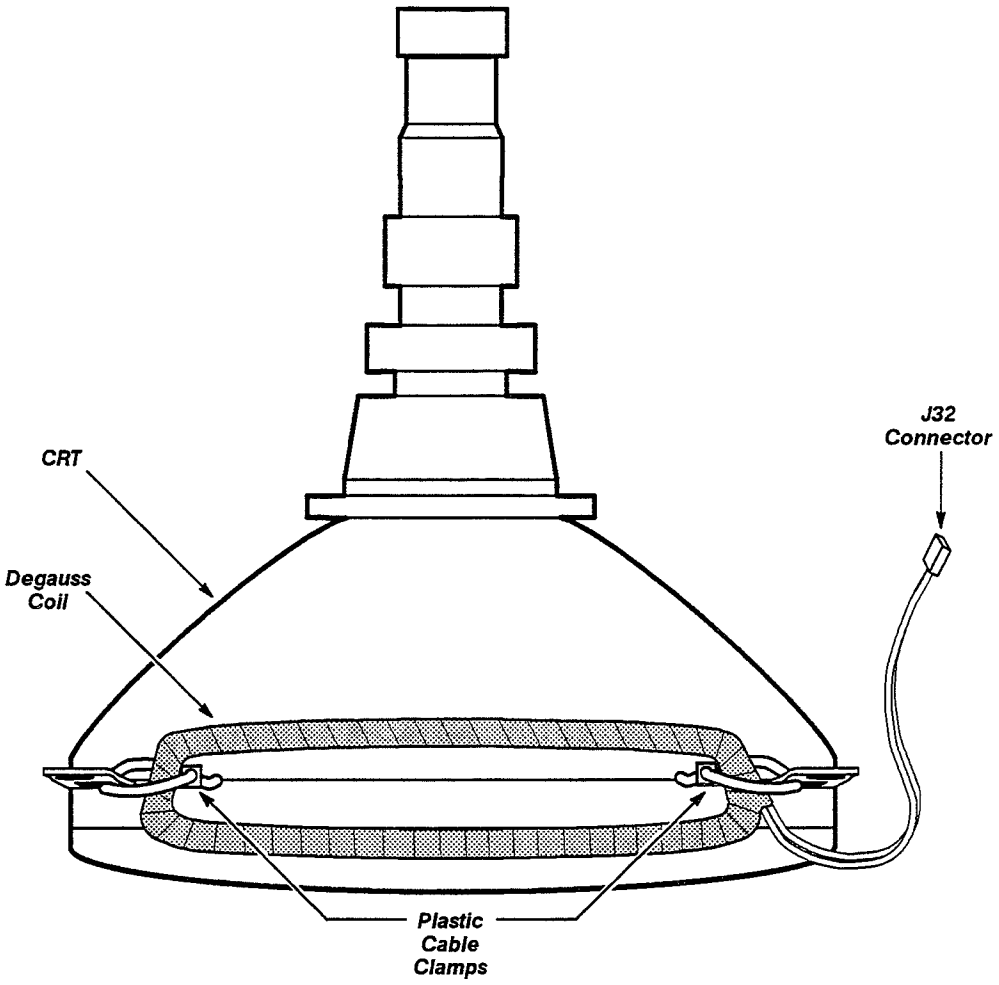

Figure 3-6 — *Removing/Replacing the Degauss Coils*

ManualsPlus.com

Fan Motor Removal/Replacement

The DSA has two chassis-mounted fan motors. The removal and replacement procedure for both fan motors are identical.

See Figures 3-1, 3-5, and 3-7 for connector and screw locations.

Remove and replace the fan motors as follows:

- ☐ Step 1: Before removing the fan motor, note the orientation of the motor to ensure that you can later correctly replace the motor.
- ☐ Step 2: Remove the six Torx head screws that secure the platform to the sides of the DSA.
- ☐ Step 3: Remove the two Torx head screws that are located on the top of the platform.
- ☐ Step 4: Raise the platform on its hinges, and then secure the platform with the support rod (refer to the instructions on the bottom of the platform).

  Note: *Always support the platform with the support rod when the platform is in the raised position.*

- ☐ Step 5: Remove the hex nuts (three on the small fan motor and four on the large fan motor) that secure the fan motor that you are removing to the chassis.
- ☐ Step 6: Disconnect the two spade terminal connectors from the fan motor. Note that the red wire connects to the (+) connector, and the brown wire connects to the (–) connector.
- ☐ Step 7: Remove the fan motor.

To replace the fan motor, perform the previous steps in the reverse process.

ManualsPlus.com

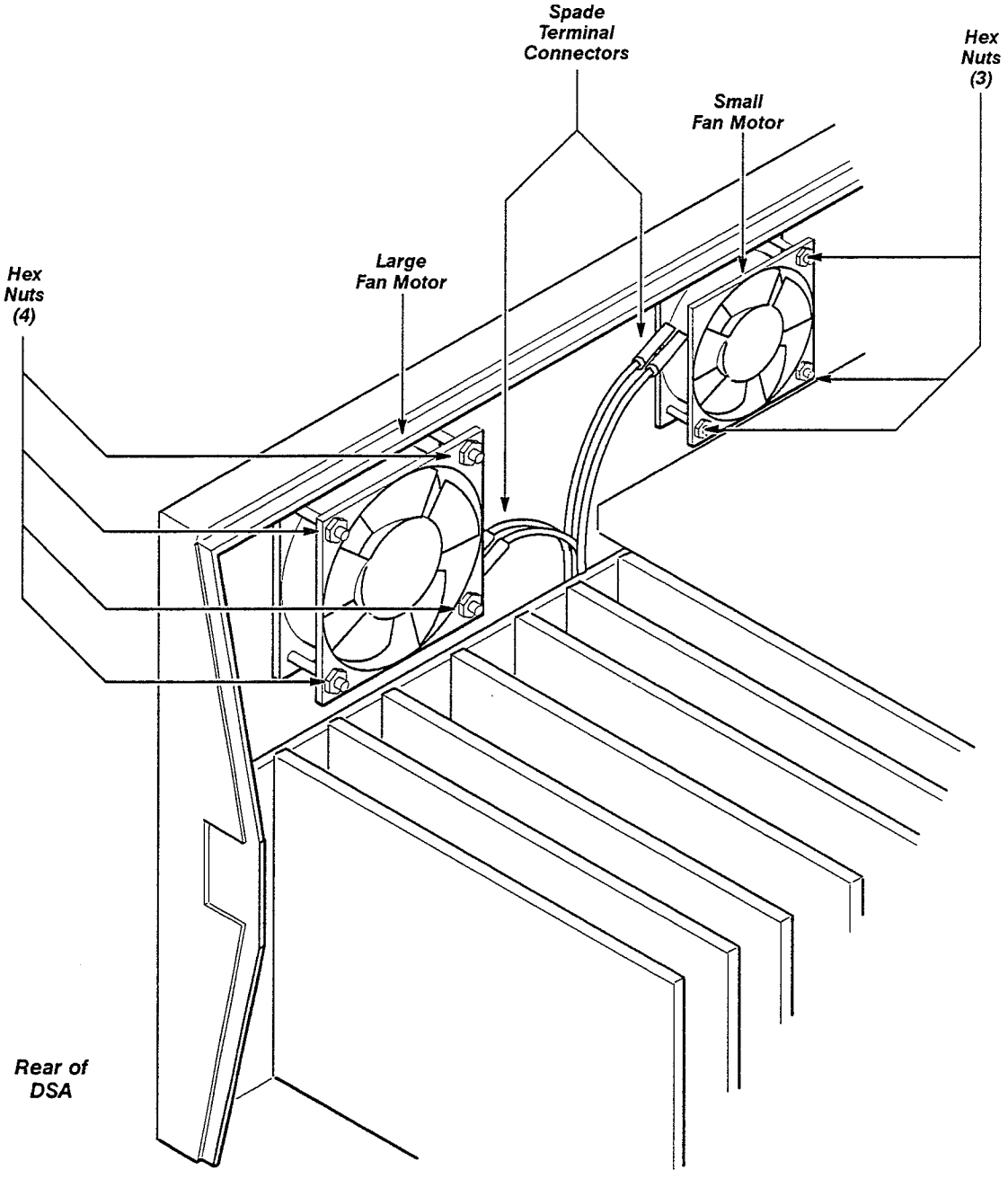

Figure 3-7 — *Removing/Replacing the Fan Motors*

ManualsPlus.com

Power Supply Module Removal/Replacement

The Power Supply module slides out of the rear of the DSA for maintenance and troubleshooting. It may also be removed to gain better access to the A1 Plug-in Interface board.

See Figures 3-1, 3-8, 3-9 and 3-42 for connector, screw, and index locations.

Remove and replace the Power Supply module as follows:

- ☐ Step 1: Turn the DSA on its left side (as viewed facing the rear panel). The Power Supply module will now be at the bottom of the DSA.
- ☐ Step 2: Remove the fourteen Torx head screws that secure the power supply rear plate.
- ☐ Step 3: Remove the power supply rear plate.
- ☐ Step 4: Carefully pull the Power Supply module partially out of the DSA. (Stop short of stretching taut or binding the wires that are connected to the A2A2 Control Rectifier board connectors.)

CAUTION *Pulling the Power Supply module any further, than partially out of the DSA, may damage connector pins.*

- ☐ Step 5: Remove the wire connectors (J61–J69 and J81–J83) from the A2A2 Control Rectifier board. Note the position of the multi-pin connector's index triangles to ensure that you can correctly replace these connectors.
- ☐ Step 6: Remove the chassis ground (green-yellow) wire that is connected from the chassis of the DSA to the Power Supply module.
- ☐ Step 7: Remove the Power Supply module.

To replace the Power Supply module, perform the previous steps in the reverse process.

Note: *Align the metal guides on the top of the Power Supply module with the grooves inside the upper portion of the opening in the DSA.*

Be careful not to pinch any wires or interconnecting cables while installing the Power Supply module.

ManualsPlus.com

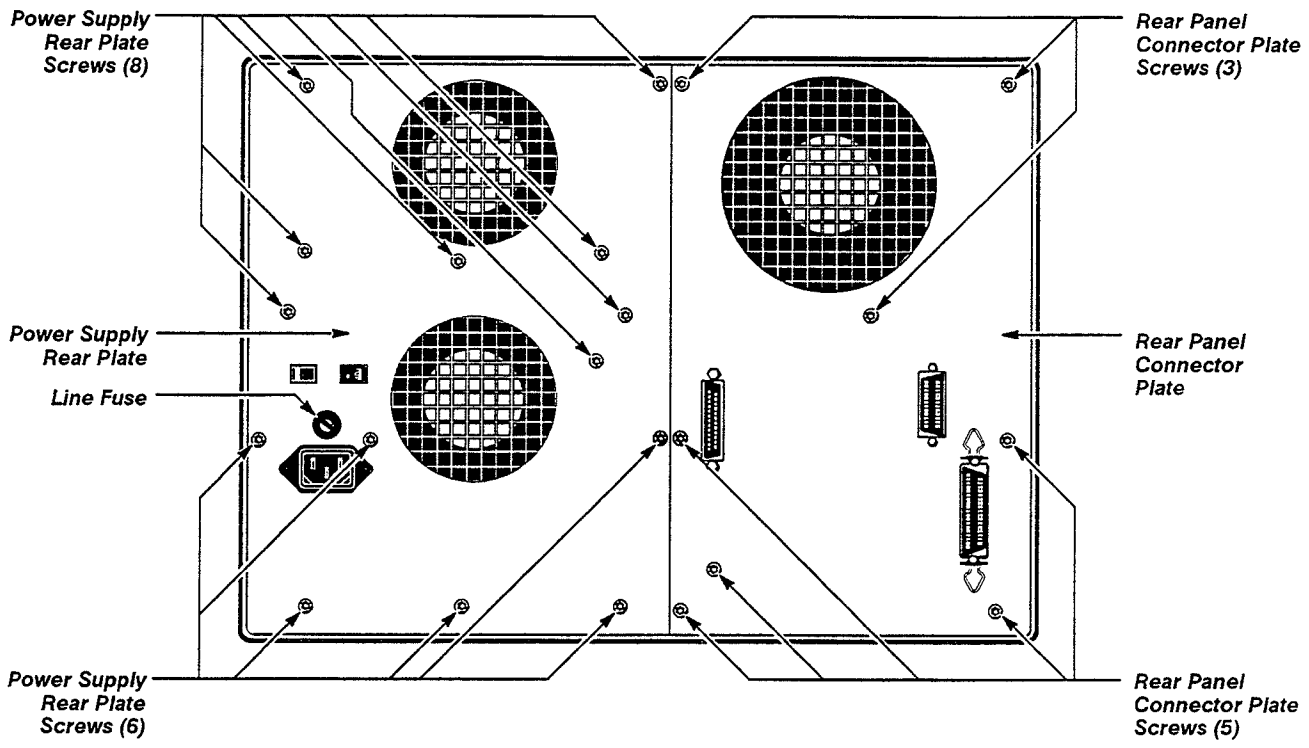

Figure 3-8 — *Removing/Replacing the Power Supply Module*

ManualsPlus.com

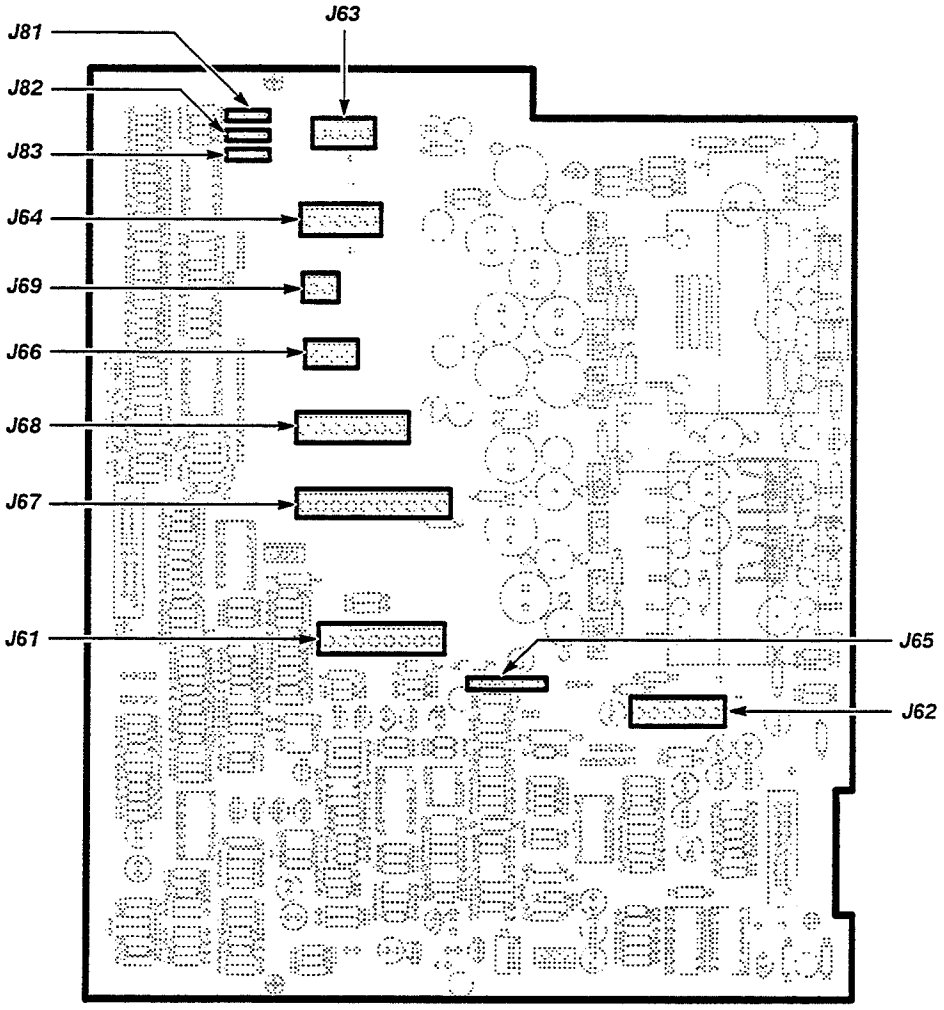

Figure 3-9 — A2A2 Control Rectifier Board Connector Locations

ManualsPlus.com

FRU Board and Assembly Removal/Replacement

Pin connectors are used for electrical interconnection with chassis mounted components and other boards. Most boards/assemblies in the DSA are mounted on the chassis. The following seven boards plug on to the top of the A13 Mother board (see Figure 3-10 for the location of these boards in the card cage):

- A14 Input/Output (I/O)
- A15 Memory Management Unit (MMU)
- A16 Display Controller
- A17 Main Processor
- A18 BB Memory
- A19 Digitizer CPU
- A20 Digitizer I/O

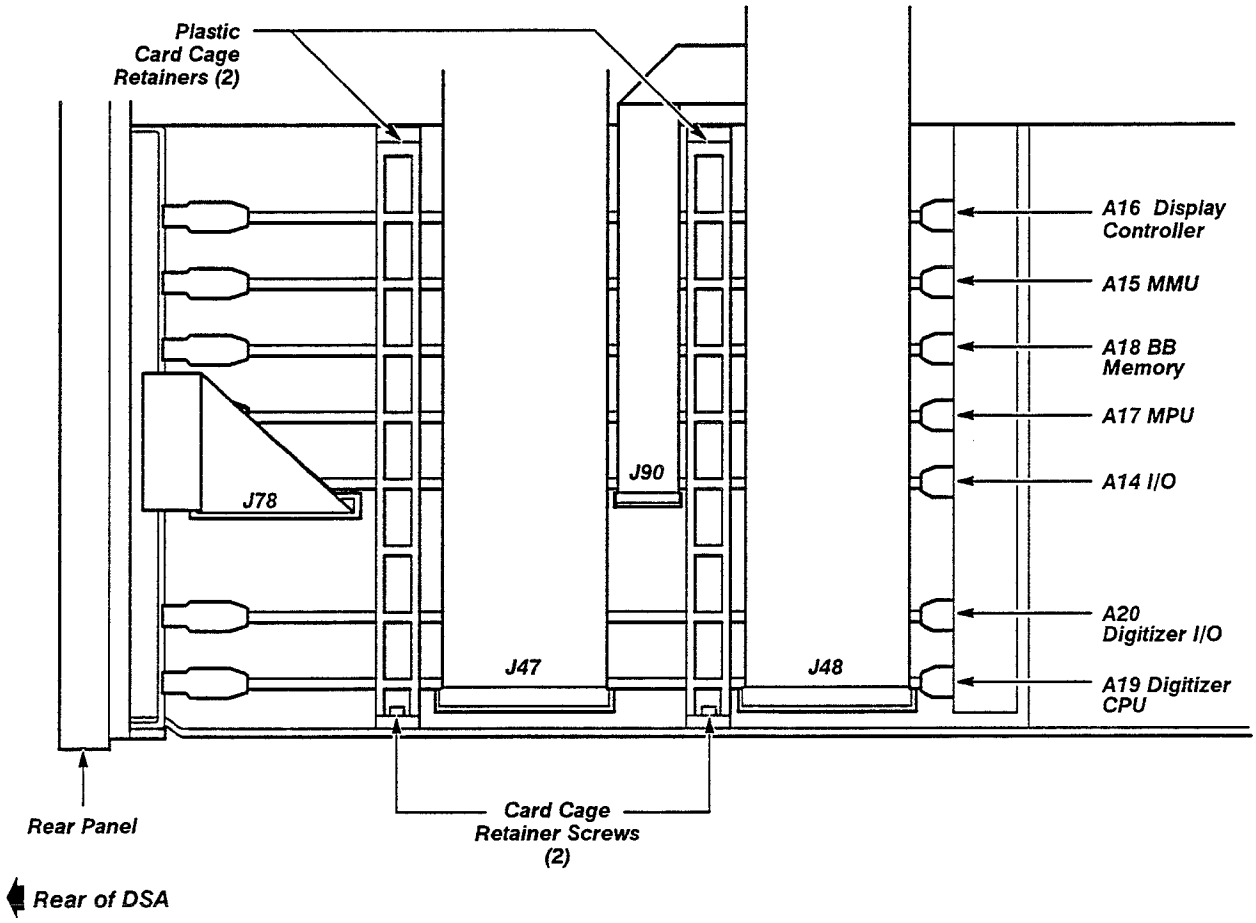

Figure 3-10 — Top View of the Card Cage

ManualsPlus.com

Feed-through connectors join the plug-on boards to the A13 Mother board.

The following two boards plug on to the top of the A21 Mini Mother board (in addition to plugging on to the top of the A13 Mother board).

- A19 Digitizer CPU
- A20 Digitizer I/O

CAUTION *After removing a board from the DSA, place the board on a grounded antistatic surface. This will minimize the chance of static charge damage to the integrated circuits and/or related circuitry.*

Note: *Some components mounted on a board must be retained for use with the new assembly. These components would include interconnecting plugs, support posts, and some wiring.*

A1 Plug-in Interface board—removal and replacement steps are listed below. See Figures 3-1, 3-5, 3-10, 3-11, 3-12, 3-13, 3-16, 3-17, 3-18, 3-30 and 3-42 for connector, screw, and index locations.

Remove and replace the A1 Plug-in Interface board as follows:

☐ Step 1: Remove the A4 Regulator board.

Note: *After removing the A4 Regulator board, place the DSA in the upright position.*

☐ Step 2: Remove the six Torx head screws that secure the platform to the sides of the DSA.

☐ Step 3: Remove the two Torx head screws that are located on the top of the platform.

☐ Step 4: Raise the platform on its hinges, and then secure the platform with the support rod (refer to the instructions on the bottom of the platform).

☐ Step 5: Disconnect connector J91 and J92 from the A1 Plug-in Interface board. Note the position of the multi-pin connector's index triangles to ensure that you can correctly replace these connectors.

☐ Step 6: Disconnect J90 from the A14 I/O board. Note the position of the multi-pin connector's index triangles to ensure that you can correctly replace these connectors.

Note: *Always support the platform with the support rod when the platform is in the raised position.*

☐ Step 7: Disconnect multi-pin connectors J29, J68, J96 and Peltola connectors J1, J2, J3, J4, J5, J6, J9 and J10 from the A6 Lower Acquisition board. Note the position of the multi-pin connector's index triangles to ensure that you can correctly replace these connectors. Tag all Peltola connectors with their correct J number to ensure that you can correctly replace these connectors.

ManualsPlus.com

- ☐ Step 8: Remove connectors J47 and J48 from the A19 Digitizer CPU board.
- ☐ Step 9: Remove the J66 wires from the plastic cable clamp located on the bottom of the platform. The J66 wires connect the A8 Waveform Processor or A8 Signal Processor board to the Power Supply module. (The A8 Signal Processor board replaces the standard A8 Waveform Processor board if your DSA is equipped with Option 3C.)
- ☐ Step 10: Disconnect the support rod from the platform, and then lower the platform.
- ☐ Step 11: Remove multi-pin connectors J67, J91 and Peltola connectors J7, J8, J9 and J10 from the A7 Upper Acquisition board. Note the position of the multi-pin connector's index triangles to ensure that you can correctly replace these connectors. Tag all Peltola connectors with their correct J number so that you can correctly replace these connectors.
- ☐ Step 12: Disconnect connector J66 from the A8 Waveform Processor (Signal Processor) board. (Connector J99 will also have to be removed if your DSA is equipped with Option 3C.) Note the position of the multi-pin connector's index triangles to ensure that you can correctly replace these connectors.
- ☐ Step 13: Remove the platform hinge screw located at the rear of the platform.
- ☐ Step 14: Lift the platform by the two finger holes on the left side of the DSA, and then remove the platform from the DSA.
- ☐ Step 15: Remove the nine Torx head screws that fasten the three interface connector receptacles to the chassis.
- ☐ Step 16: Remove the A1 Plug-in Interface board.

To replace the A1 Plug-in Interface board, perform the previous steps in the reverse process.

Note: *To replace the nine Torx head screws into the A1 Plug-in Interface board's connector receptacles, start all of the nine screws after you have reinstalled the board into the chassis. Then tighten all nine Torx head screws into the connector receptacles.*

When securing the platform to the DSA, ensure that there are not any cables covering the two hex spacer nuts below the platform. Before replacing the two Torx head screws on the top of the platform, ensure that the screw holes are clear.

ManualsPlus.com

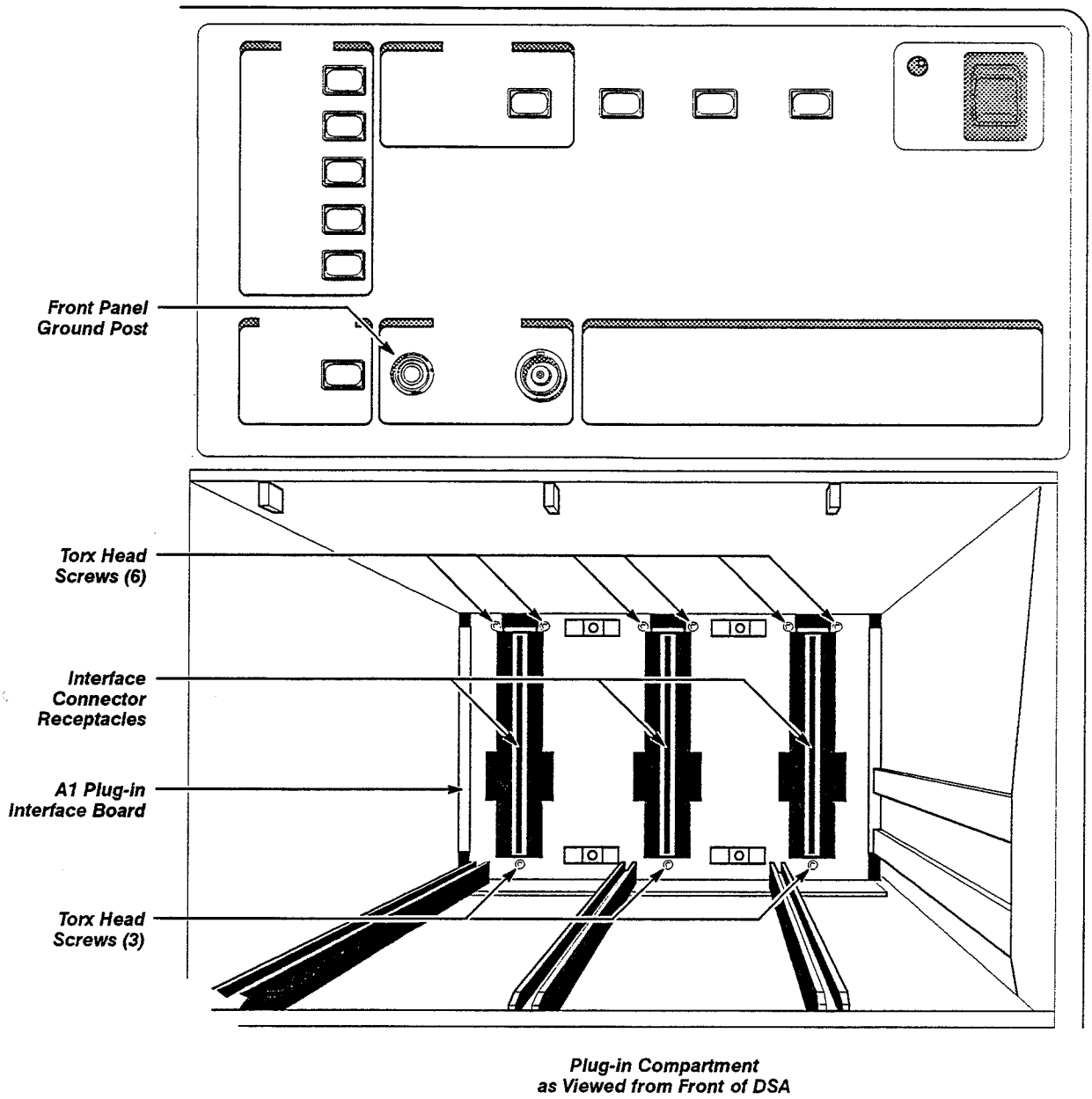

Figure 3-11 — *Plug-in Interface Connector Receptacles Torx Head Screw Locations*

ManualsPlus.com

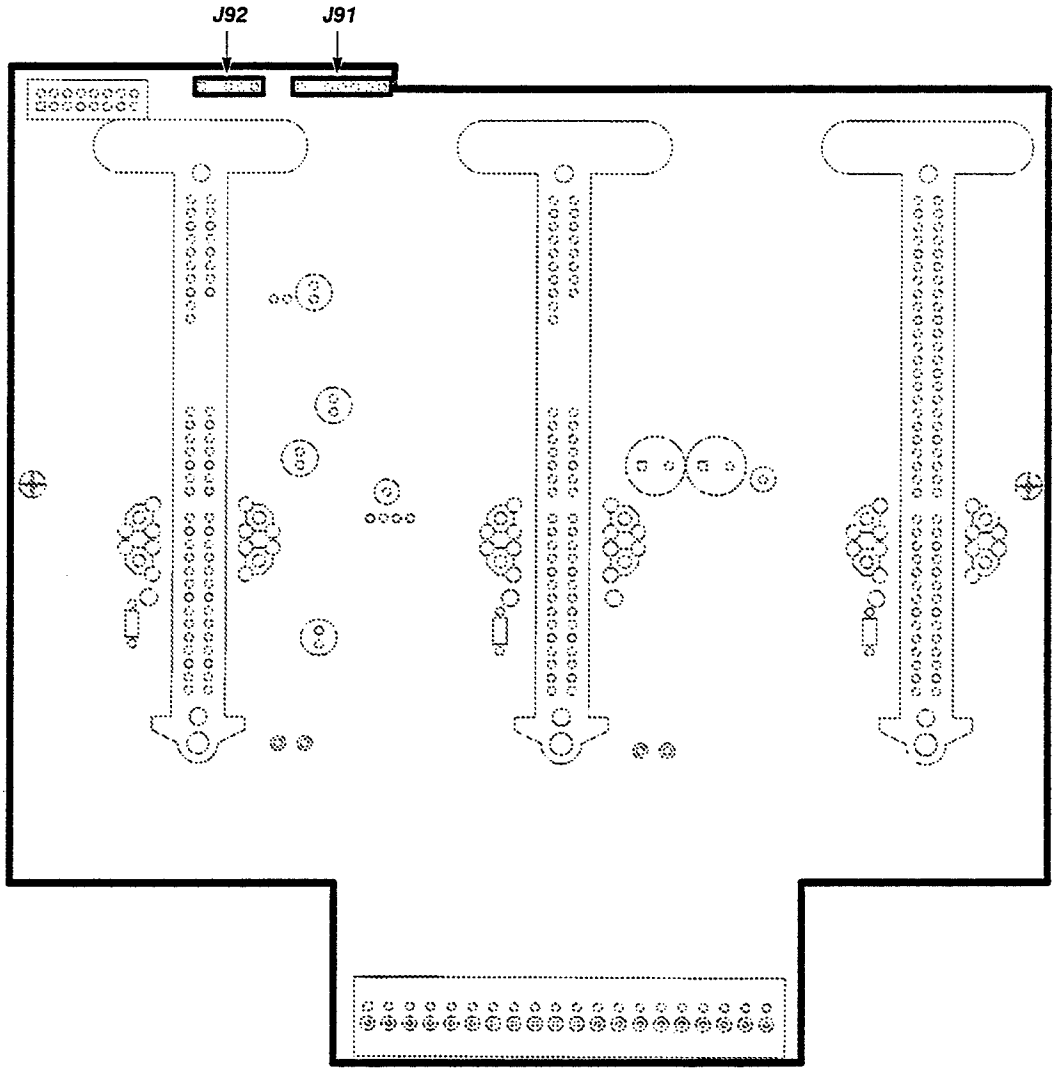

Figure 3-12 — Removing/Replacing the A1 Plug-in Interface Board

ManualsPlus.com

A4 Regulator board—removal and replacement steps are listed below. See Figures 3-1, 3-13 and 3-42 for connector, screw, and index locations.

☐ Step 1: Position the DSA so that it's right side is facing upwards.

☐ Step 2: Disconnect connectors J61, J62, J65, J76, J93, J94, J96, and J99. Note the position of the multi-pin connector's index triangles to ensure that you can correctly replace these connectors.

☐ Step 3: Remove the four Torx head screws that secure the A4 Regulator board to the chassis of the DSA.

Note: *The A4 Regulator board is now unfastened from the chassis. However, this board remains secured to the A1 Plug-in Interface board through interconnecting pins.*

☐ Step 4: Pull the A4 Regulator board to the rear of the DSA to disconnect the A4 Regulator board from the J95 connector pins.

To replace the A4 Regulator board, perform the previous steps in the reverse process.

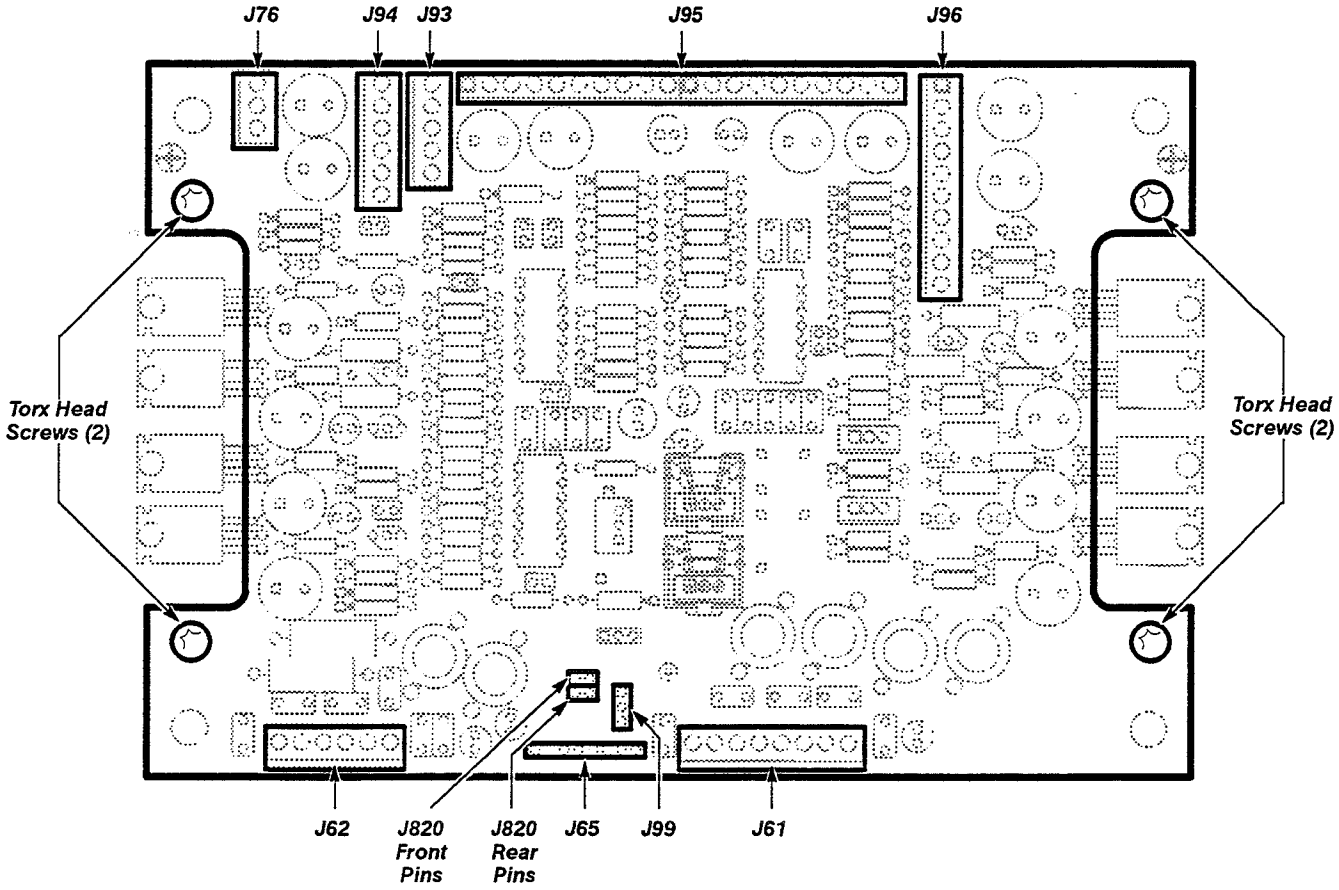

Figure 3-13 — Removing/Replacing the A4 Regulator Board

ManualsPlus.com

A5 Calibrator board—removal and replacement steps are listed below. See Figures 3-1, 3-5, 3-11, 3-14, 3-15 and 3-42 for connector, screw, and index locations.

☐ Step 1: Remove the connector nut from the front panel ground post.

☐ Step 2: Remove the six Torx head screws that secure the platform to the sides of the DSA.

☐ Step 3: Remove the two Torx head screws that are located on the top of the platform.

☐ Step 4: Raise the platform on its hinges, and then secure the platform with the support rod (refer to the instructions on the bottom of the platform).

Note: *Always support the platform with the support rod when the platform is in the raised position.*

☐ Step 5: Remove the two $^1/_4$-inch nuts that secure the front panel calibrator connectors to the chassis.

☐ Step 6: Remove connectors J28, J29, J92 and J93 from the A5 Calibrator board. Note the position of the multi-pin connector's index triangles to ensure that you can correctly replace these connectors.

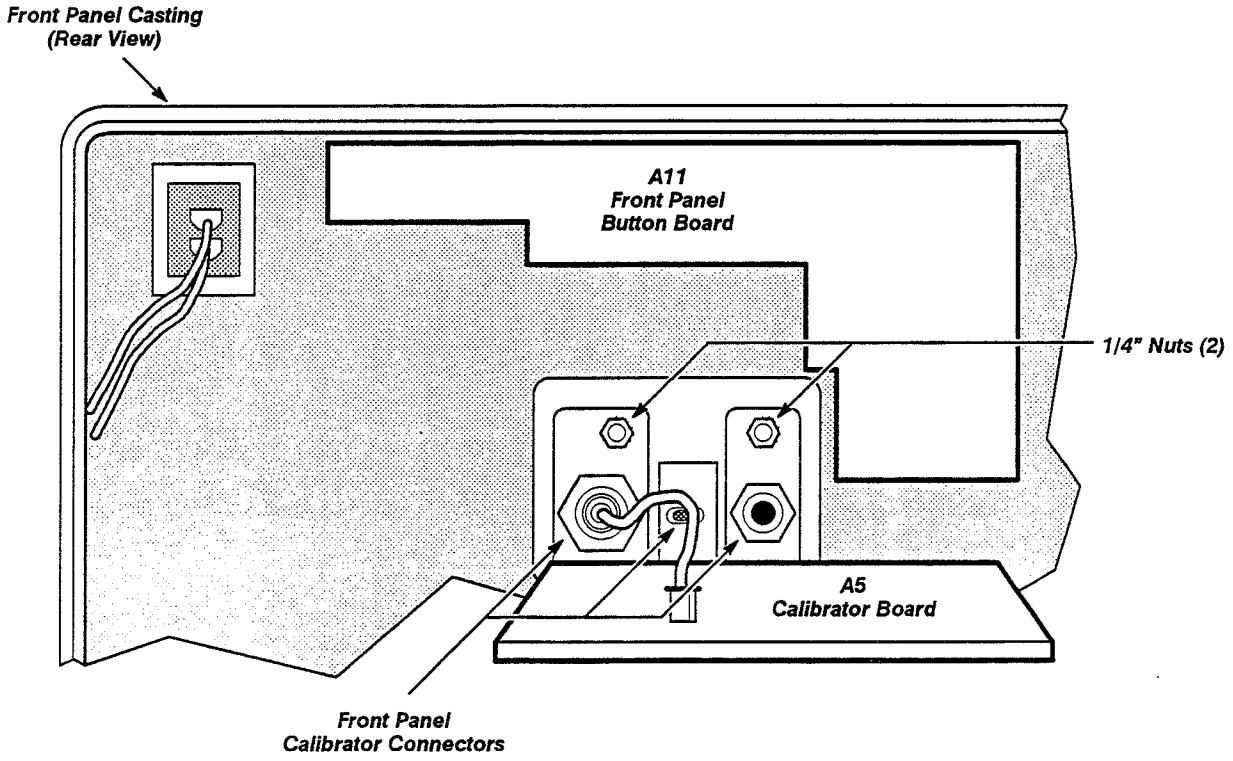

Figure 3-14 — Removing/Replacing the Front Panel Calibrator's $^1/_4$-Inch Nuts

ManualsPlus.com

☐ Step 7: Remove the six Torx head screws that secure the A5 Calibrator board to the chassis.

☐ Step 8: Remove the A5 Calibrator board.

Note: *To remove the A5 Calibrator board, slide the board towards the rear of the DSA until the tabs on the side of the chassis are loose. Then, carefully maneuver the board out of the chassis.*

To replace the A5 Calibrator board, perform the previous steps in the reverse process.

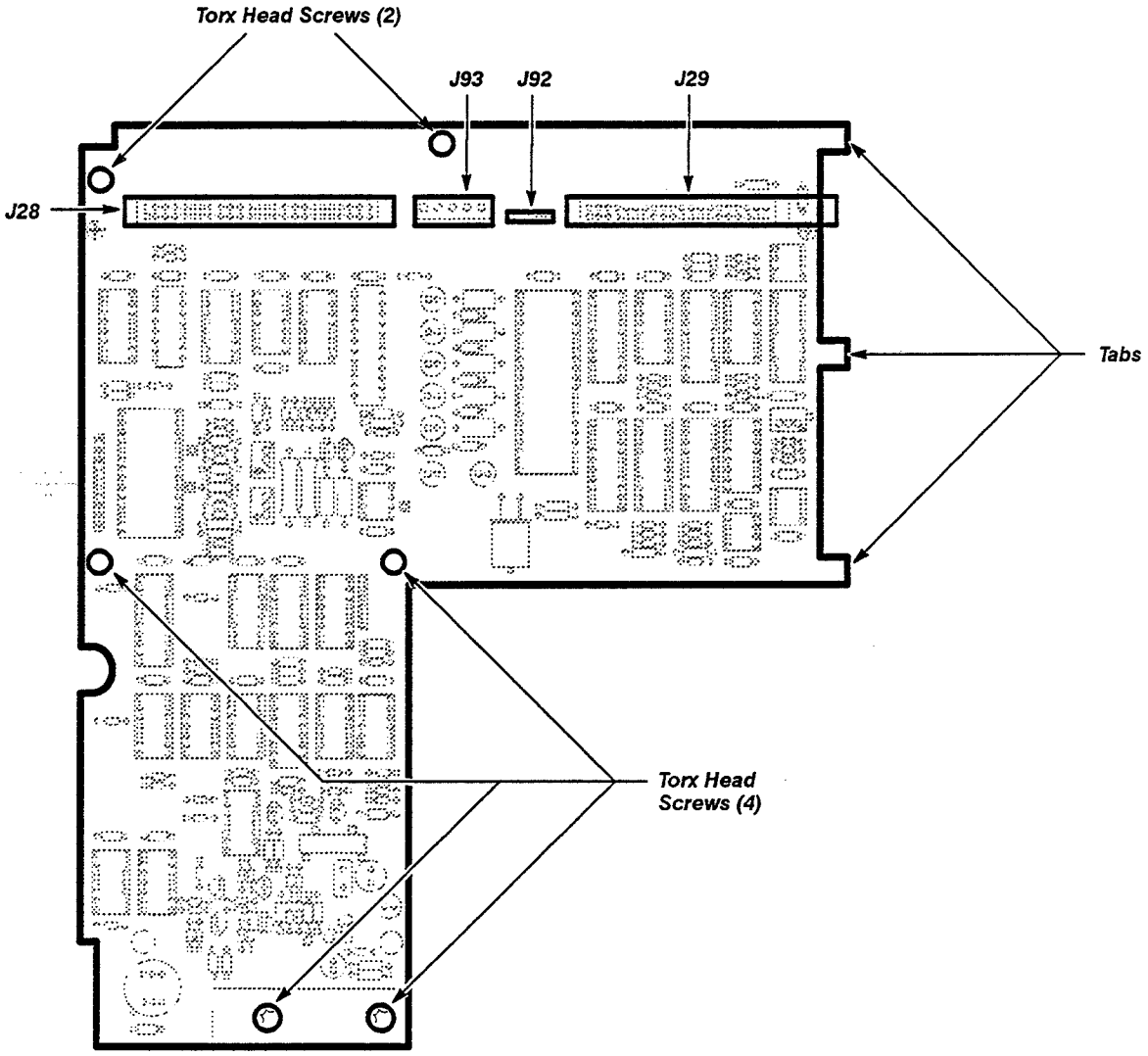

Figure 3-15 *— Removing/Replacing the A5 Calibrator Board*

ManualsPlus.com

A6 Lower Acquisition board—removal and replacement steps are listed below. See Figures 3-1, 3-5, 3-16 and 3-42 for connector, screw, and index locations.

☐ Step 1: Remove the six Torx head screws that secure the platform to the sides of the DSA.

☐ Step 2: Remove the two Torx head screws that are located on the top of the platform.

☐ Step 3: Raise the platform on its hinges, and then secure the platform with the support rod (refer to the instructions on the bottom of the platform).

Note: *Always support the platform with the support rod when the platform is in the raised position.*

☐ Step 4: Disconnect connectors J29, J68, and J96 from the A6 Lower Acquisition board. Note the position of the multi-pin connector's index triangles to ensure that you can correctly replace these connectors.

☐ Step 5: Disconnect Peltola connectors J1, J2, J3, J4, J5, J6, J9, and J10 from the A6 Lower Acquisition board. Tag all Peltola connectors with their correct J number so they can be correctly replaced.

☐ Step 6: Remove the eighteen Torx head screws that secure the A6 Lower Acquisition board.

Note: *The A6 Lower Acquisition board is now unfastened from the chassis. However, it remains secured to the A7 Upper Acquisition board through interconnecting pins.*

☐ Step 7: Grasp the A6 Lower Acquisition board near the interconnecting pins P43 and P44 (at the bottom of the platform). Gently lift the board away from the platform to disconnect the P43 and P44 connectors.

☐ Step 8: Grasp the A6 Lower Acquisition board near the P41 and P42 interconnecting pins. Ensure that you have a firm grip on the board when disconnecting the interconnecting pins. Gently lift the board away from the platform to disconnect the P41 and P42 connectors.

CAUTION *Once the P41 and P42 interconnecting pins are loose, the A6 Lower Acquisition board is completely detached from the DSA.*

☐ Step 9: Remove the A6 Lower Acquisition board.

To replace the A6 Lower Acquisition board, perform the previous steps in the reverse process.

Note: *To reconnect the P41, P42, P43 and P44 interconnecting pins on the A6 Lower Acquisition board, align all of the interconnecting pins with their respective connectors, and then press the pins and their connectors together.*

ManualsPlus.com

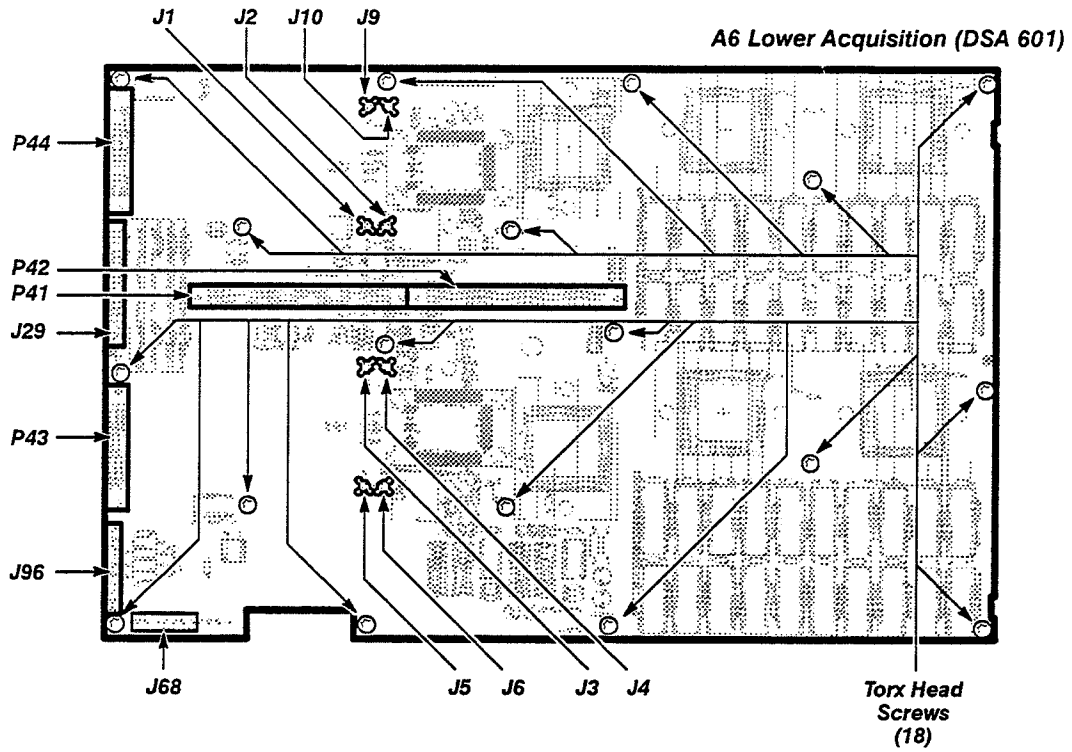

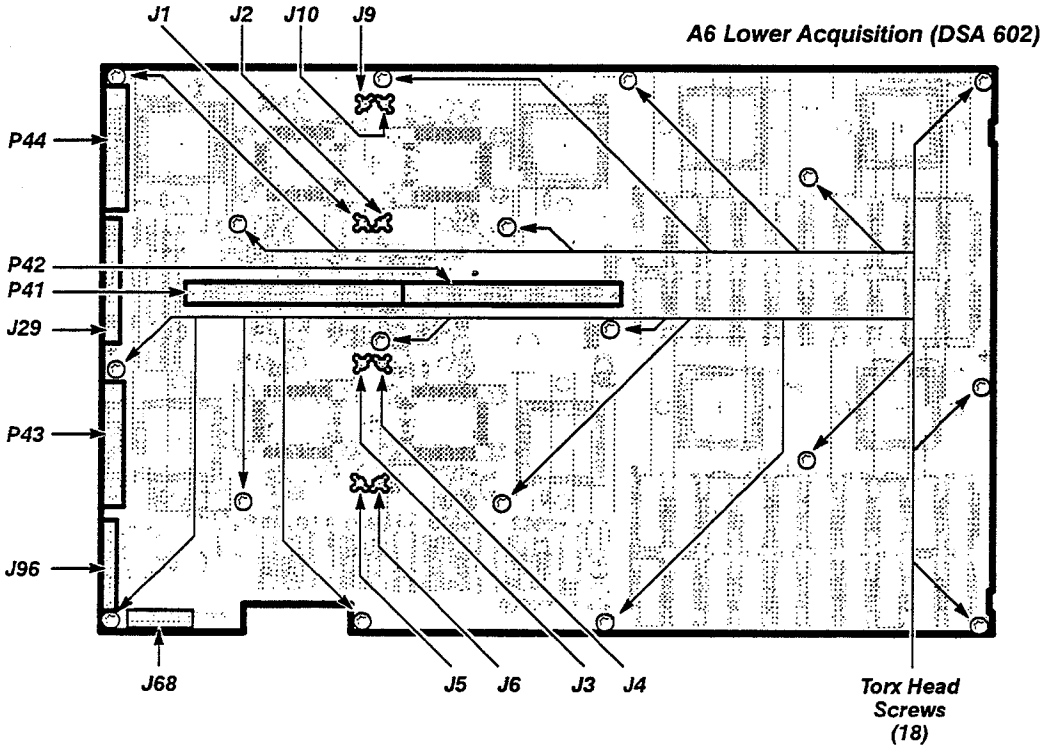

Figure 3-16 — Removing/Replacing the A6 Lower Acquisition Board

ManualsPlus.com

A7 Upper Acquisition board—removal and replacement steps are listed below. See Figures 3-1, 3-17, and 3-42 for connector, screw, and index locations.

- ☐ Step 1: Disconnect connectors J67 and J91 from the A7 Upper Acquisition board. Note the position of the multi-pin connector's index triangles to ensure that you can correctly replace these connectors.
- ☐ Step 2: Disconnect Peltola connectors J7, J8, J11 and J12 from the A7 Upper Acquisition board. Tag all Peltola connectors with their correct J numbers so they can be correctly replaced.
- ☐ Step 3: Remove the sixteen Torx head screws that secure the A7 Upper Acquisition board to the platform.
- ☐ Step 4: Remove the four Torx head screws that secure the Trigger ICs to the heat sink below the A7 Upper Acquisition board.

  Note: *The A7 Upper Acquisition board is now unfastened from the platform. However, it remains secured to the A6 Lower Acquisition board and the A8 Waveform Processor (Signal Processor) board through interconnecting pins.*

- ☐ Step 5: Gently lift the A7 Upper Acquisition board away from the platform to disconnect the J41, J42, J43, and J44 connectors.
- ☐ Step 6: Once the J41, J42, J43 and J44 connectors are disconnected, pull the A7 Upper Acquisition board toward the rear of the DSA to disconnect the J45 and J46 connectors.
- ☐ Step 7: Remove the A7 Upper Acquisition board.

To replace the A7 Upper Acquisition board, perform the previous steps in the reverse process.

Note: *When replacing the A7 Upper Acquisition board, do not over tighten the four screws that secure the heat sink to the A7 Upper Acquisition board.*

ManualsPlus.com

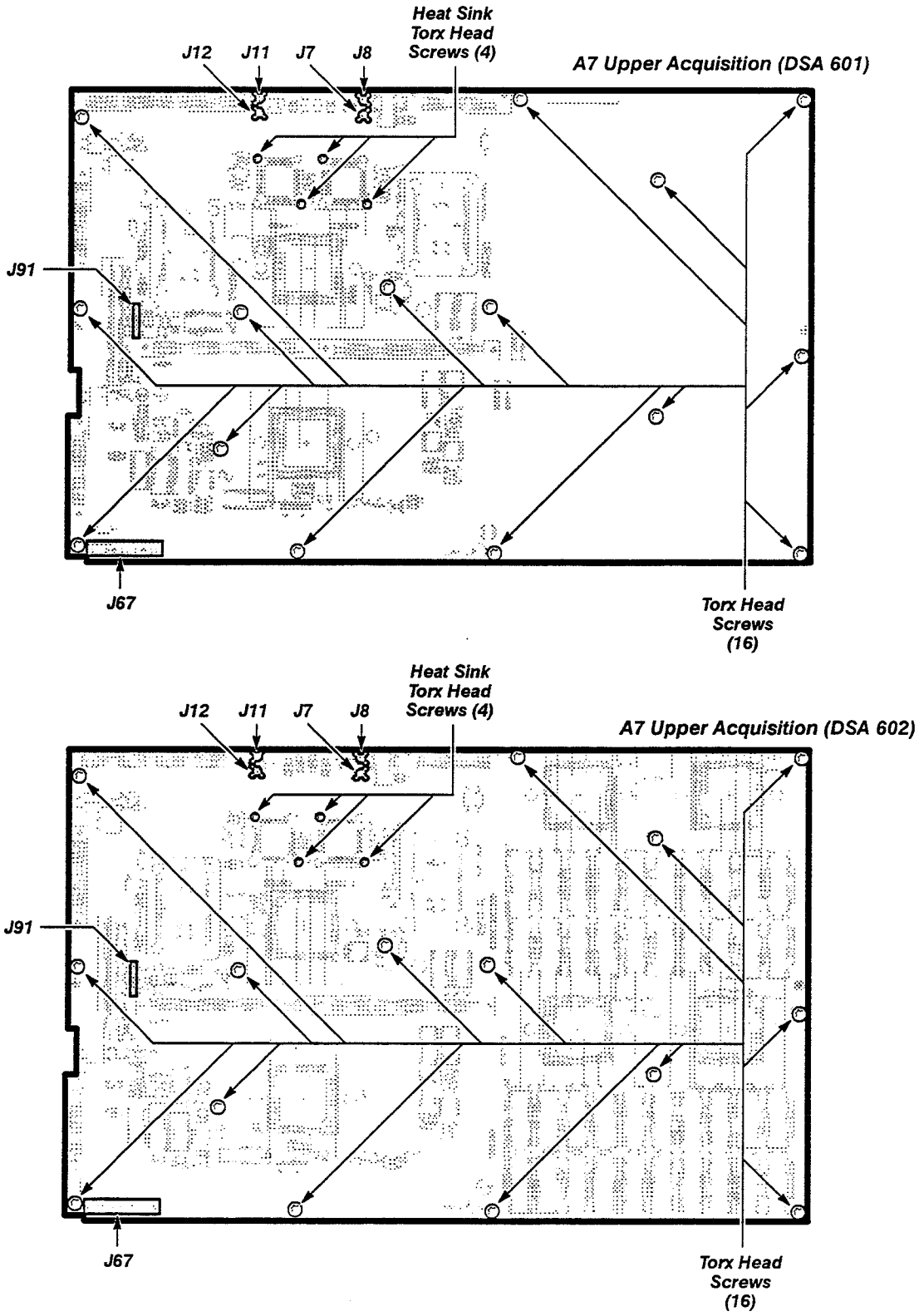

Figure 3-17 — *Removing/Replacing the A7 Upper Acquisition Board*

ManualsPlus.com

A8 Waveform Processor or A8 Signal Processor board—removal and replacement steps are listed below. The A8 Signal Processor board replaces the standard A8 Waveform Processor board if your DSA is equipped with Option 3C. See Figures 3-1, 3-18, and 3-42 for connector, screw, and index locations.

- ☐ Step 1: Disconnect connectors J47, J48, and J66 from the A8 Waveform Processor (Signal Processor) board. If your DSA is equipped with Option 3C, you will also have to disconnect connector 49. Note the position of the multi-pin connector's index triangles to ensure that you can correctly replace these connectors.
- ☐ Step 2: Remove the eleven Torx head screws that fasten the A8 Waveform Processor (Signal Processor) board to the platform.
- ☐ Step 3: Pull the A8 Waveform Processor (Signal Processor) board towards the front of the DSA to disconnect the P45 and P46 interconnecting pins.
- ☐ Step 4: Remove the A8 Waveform Processor (Signal Processor) board.

To replace the A8 Waveform Processor (Signal Process) board, perform the previous steps in the reverse process.

ManualsPlus.com

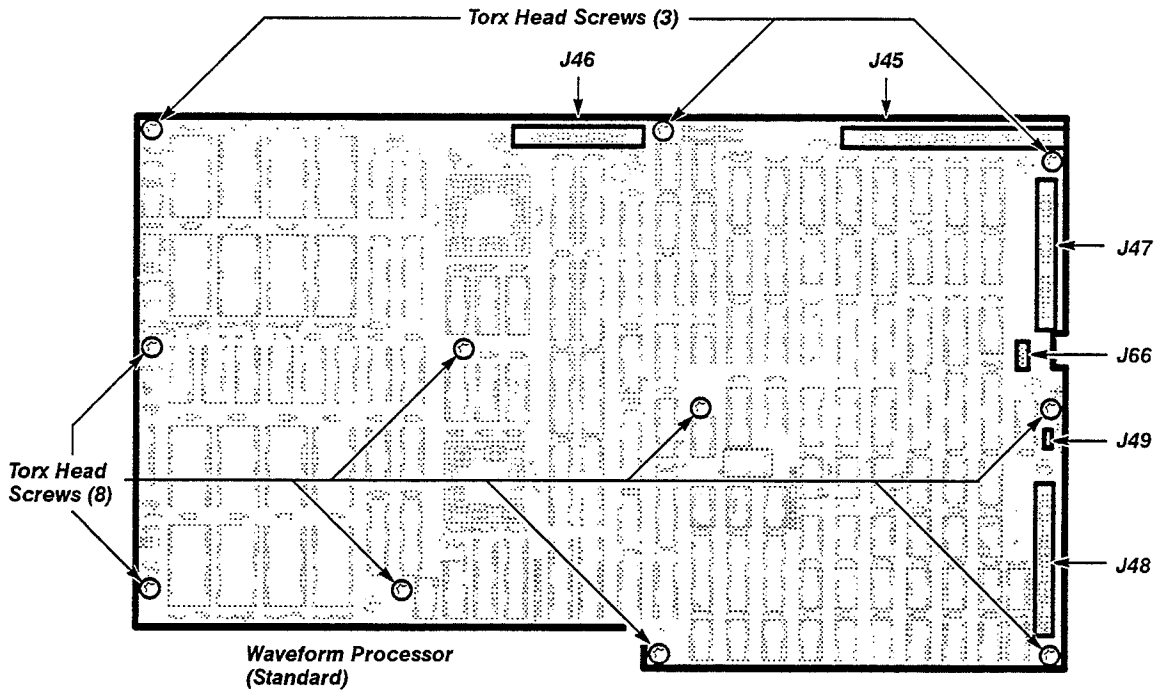

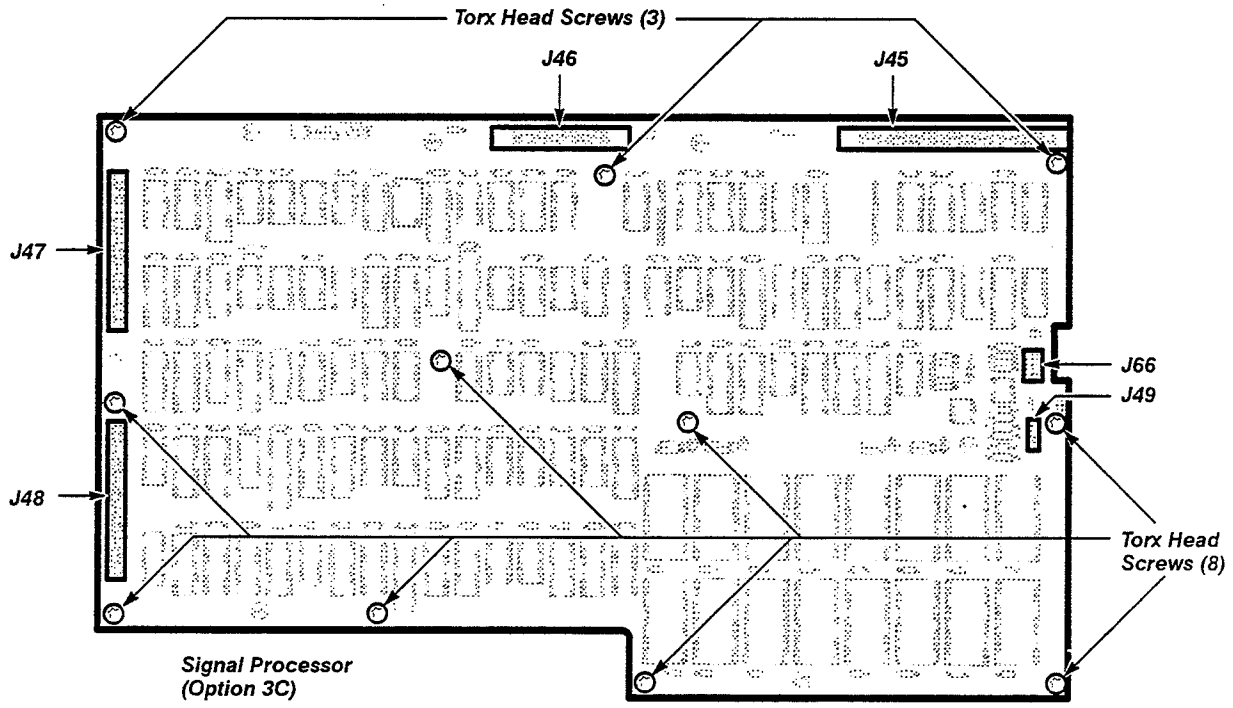

Figure 3-18 — Removing/Replacing the A8 Waveform Processor(Signal Processor) Board

ManualsPlus.com

A9 Touch Panel Assembly—removal and replacement steps are listed below. See Figures 3-1, 3-19, 3-20, and 3-42 for connector, screw, and index locations.

- ☐ Step 1: Set the DSA on its right side.
- ☐ Step 2: Remove the two screws that secure the A9 Touch Panel Assembly to the bottom of the front casting.
- ☐ Step 3: Remove the two Torx head screws that secure the A9 Touch Panel Assembly to the top of the front casting.
- ☐ Step 4: Slowly pull the A9 Touch Panel Assembly away from the DSA until you have access to the J73 connector.

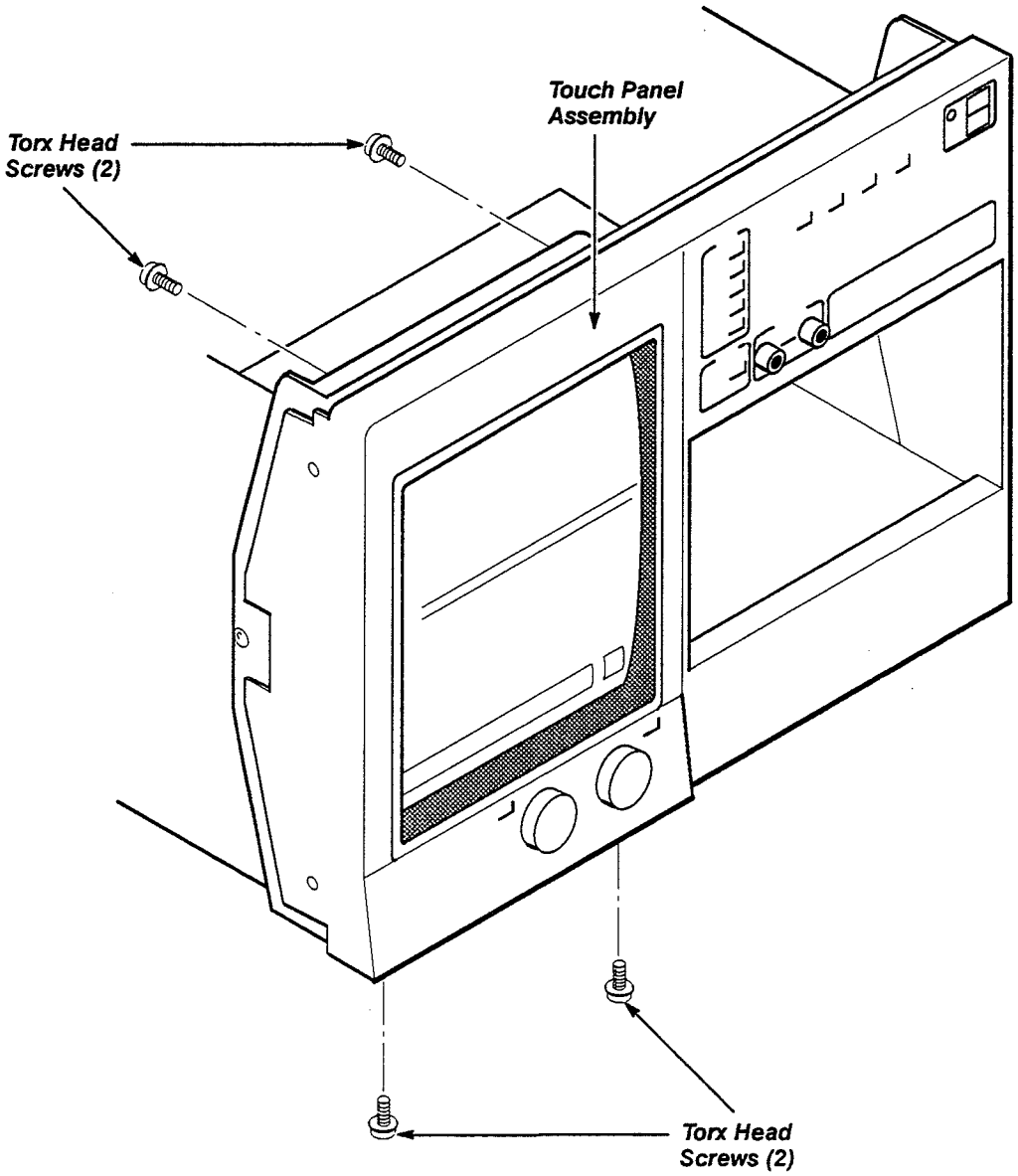

Figure 3-19 — Removing/Replacing the A9 Touch Panel Assembly Torx Head Screws

ManualsPlus.com

☐ Step 5: Disconnect connector J73 from the A9 Touch Panel Assembly. Note the position of the multi-pin connector's index triangles to ensure that you can correctly replace these connectors.

☐ Step 6: Remove the A9 Touch Panel Assembly

To replace the A9 Touch Panel Assembly, perform the previous steps in the reverse process.

Note: *Ensure that the Degauss coils are positioned forward and against the CRT, so that the A9 Touch Panel Assembly can be easily replaced.*

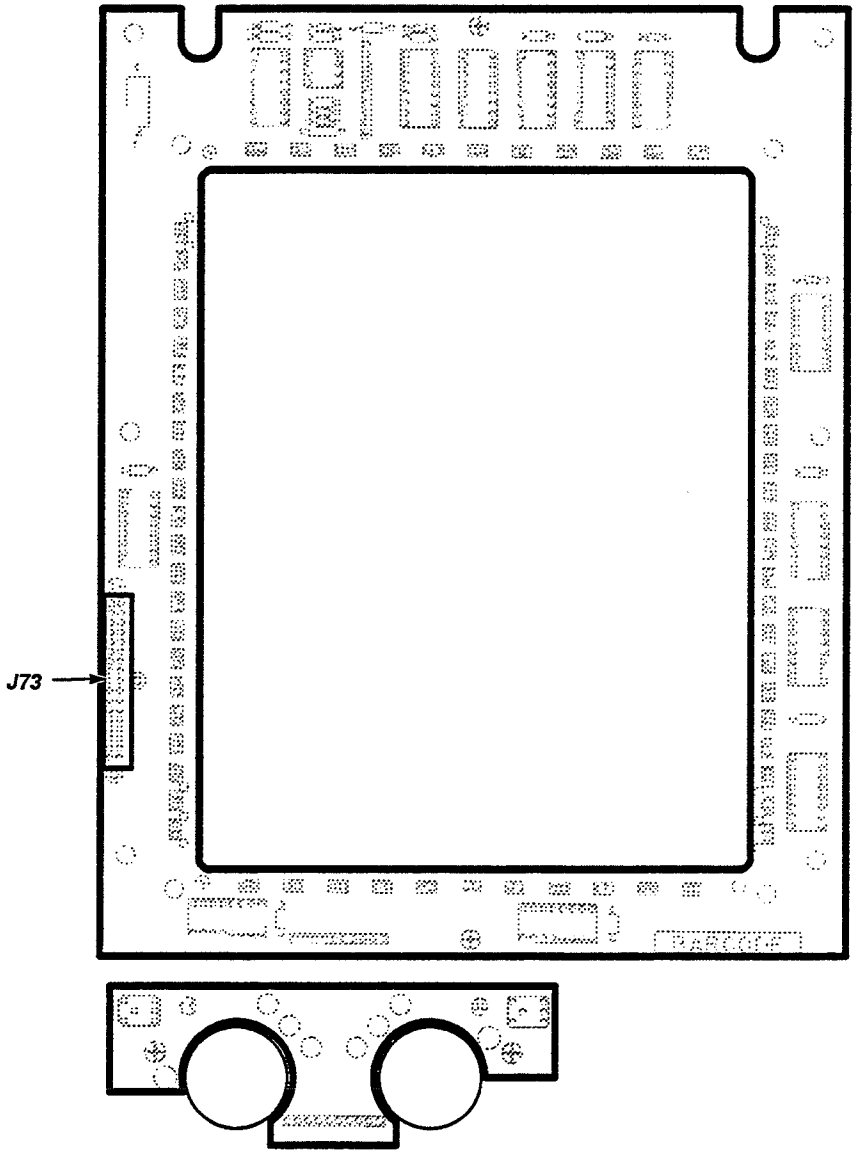

Figure 3-20 *— Removing/Replacing the A9 Touch Panel Assembly*

ManualsPlus.com

A10 Front Panel Control board—removal and replacement steps are listed below. See Figures 3-1, 3-2, 3-5, 3-21 and 3-42 for connector, screw, and index locations.

☐ Step 1: Remove the six Torx head screws that secure the platform to the sides of the DSA.

☐ Step 2: Remove the two Torx head screws that are located on the top of the platform.

☐ Step 3: Raise the platform on its hinges, and then secure the platform with the support rod (refer to the instructions on the bottom of the platform).

Note: *Always support the platform with the support rod when the platform is in the raised position.*

☐ Step 4: Remove the ten Torx head screws that secure the CRT shield to the chassis.

Note: *When replacing the A10 Front Panel Control board, replace the rear-most Torx head screw first, and then the front-most Torx head screw.*

☐ Step 5: Push the CRT shield towards the rear of the DSA, and then lift the CRT shield out of the chassis.

☐ Step 6: Remove the two Torx head screws that secure the A10 Front Panel Control board to the chassis.

Note: *To remove the two Torx head screws, use a T10 Torx head screwdriver tip with a a $^1/_4$-inch wrench. Take care not to drop the Torx tip down in the bottom of the chassis.*

☐ Step 7: While holding the A10 Front Panel Control board, disconnect connectors J72, J75 and J73. Note the position of the multi-pin connector's index triangles to ensure that you can correctly replace these connectors.

Note: *Connector J73 may be difficult to disconnect. Do not use a metal tool to disconnect connector J73, and take care not to damage the CRT when you disconnect the connector.*

☐ Step 8: Lift the A10 Front Panel Control board out of the plastic guides at the bottom of the board.

☐ Step 9: Remove the A10 Front Panel Control board.

To replace the A10 Front Panel Control board, perform the previous steps in the reverse process.

ManualsPlus.com

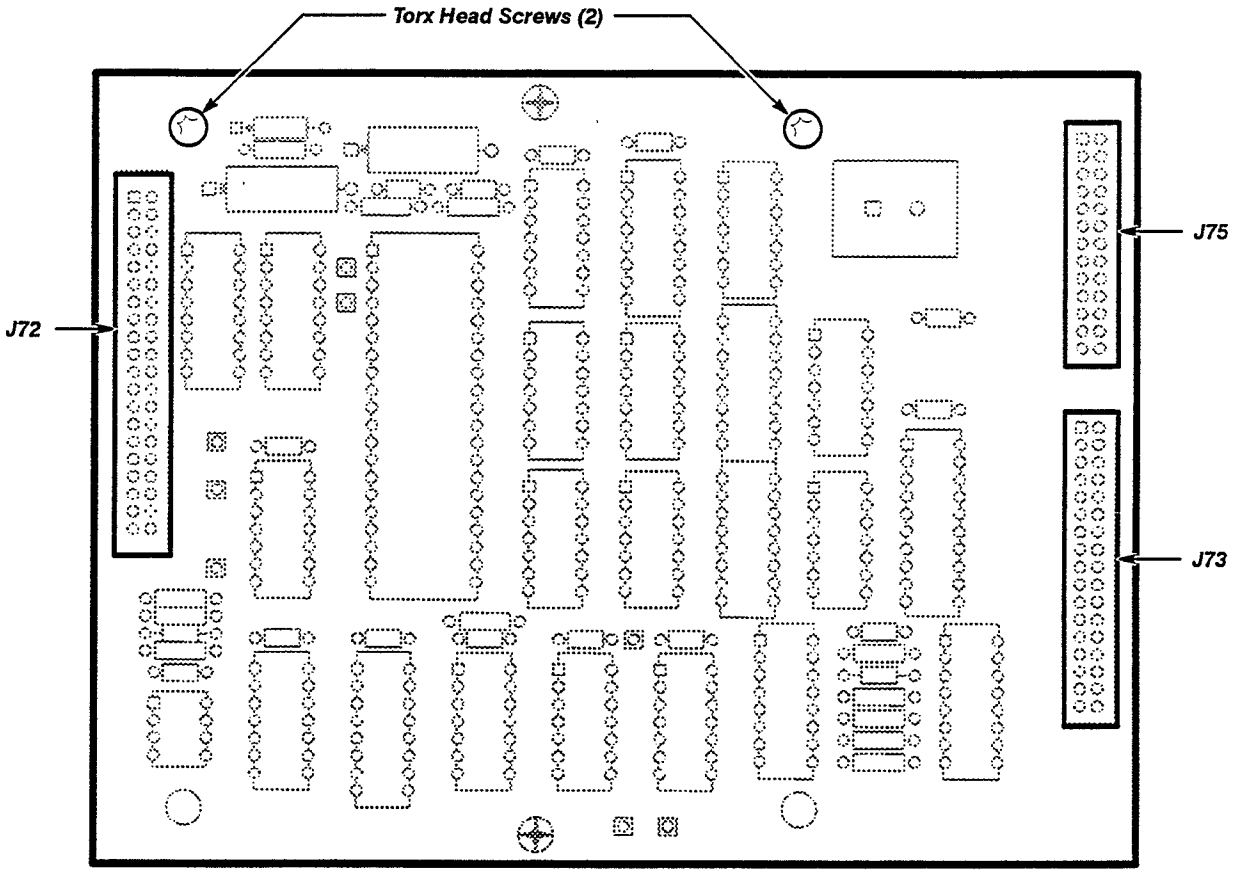

Figure 3-21 — *Removing/Replacing the A10 Front Panel Control Board*

ManualsPlus.com

A11 Front Panel Button board—removal and replacement steps are listed below. See Figures 3-1, 3-2, 3-5, 3-21, 3-22 and 3-42 for connector, screw, and index locations.

- ☐ Step 1: Remove the six Torx head screws that secure the platform to the sides of the DSA.
- ☐ Step 2: Remove the two Torx head screws that are located on the top of the platform.
- ☐ Step 3: Raise the platform on its hinges, and then secure the platform with the support rod (refer to the instructions on the bottom of the platform).

  Note: *Always support the platform with the support rod when the platform is in the raised position.*

- ☐ Step 4: Remove the ten Torx head screws that secure the CRT shield to the chassis.
- ☐ Step 5: Push the CRT shield toward the rear of the DSA, and then lift the CRT shield out of the chassis.
- ☐ Step 6: Disconnect the dual-pin connector J71 from the A11 Front Panel Button board. Note the position of the multi-pin connector's index triangles to ensure that you can correctly replace these connectors.
- ☐ Step 7: Disconnect connector J75 from the A10 Front Panel Control board, and then feed the connector through the CRT chassis. Note the position of the multi-pin connector's index triangles to ensure that you can correctly replace these connectors.
- ☐ Step 8: Remove the seven Torx head screws that secure the A11 Front Panel Button board to the chassis.
- ☐ Step 9: Remove the A11 Front Panel Button board.

To replace the A11 Front Panel Button board, perform the previous steps in the reverse process.

ManualsPlus.com

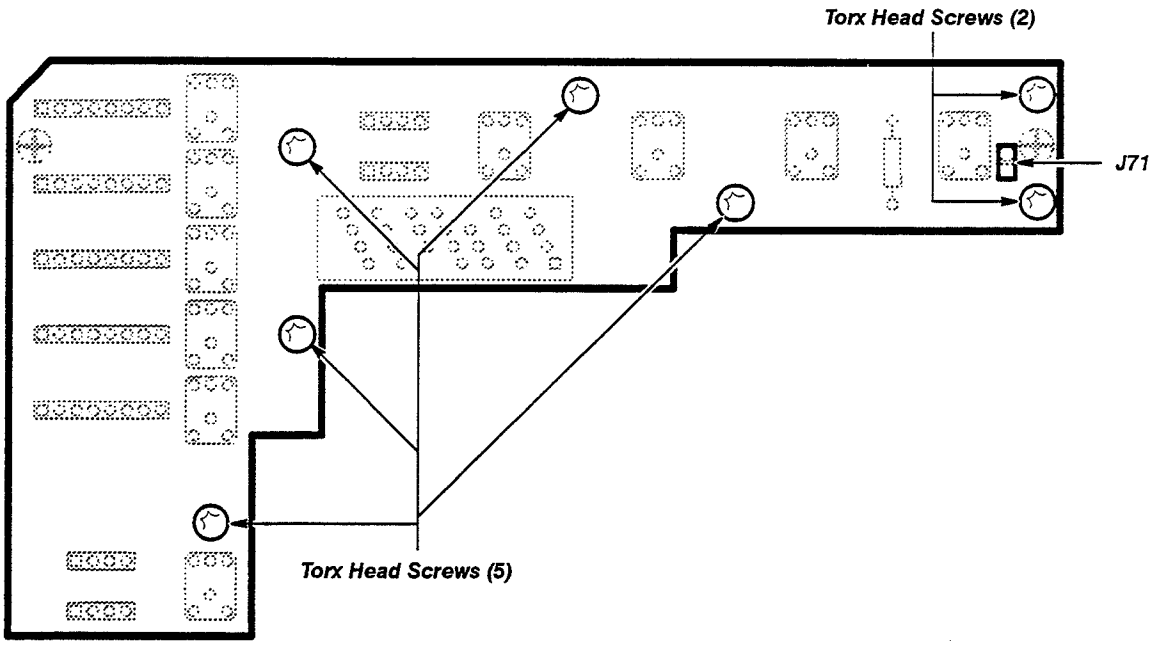

Figure 3-22 — *Removing/Replacing the A11 Front Panel Button Board*

ManualsPlus.com

A12 Rear Panel Assembly—removal and replacement steps are listed below. See Figures 3-1, 3-8, 3-23, and 3-42 for connector, screw, and index locations.

- ☐ Step 1: Remove the connectors from the RS-232-C, the GPIB, and the PRINTER connector holders.
- ☐ Step 2: Remove the eight Torx head screws from the outer edges of the rear panel connector plate.
- ☐ Step 3: Tilt the rear panel connector plate away from the DSA.
- ☐ Step 4: Remove connector J78 from the top of the A12 Rear Panel assembly. Note the position of the multi-pin connector's index triangles to ensure that you can correctly replace these connectors.
- ☐ Step 5: Pull out the rear panel connector plate and the attached A12 Rear Panel Assembly.
- ☐ Step 6: Remove the black ground wire screw from the bottom of card cage chassis.
- ☐ Step 7: Remove and save the following items from the rear panel connector plate for replacing the A12 Rear Panel Assembly:
  - two bail brackets, screws, and washers from the PRINTER connector
  - two posts from the GPIB connector
  - posts, lock washers, and flat washers from the RS-232-C connector(s)
  - Torx head screw and washer (at lower left, if present)
- ☐ Step 8: Remove the A12 Rear Panel Assembly from the rear panel connector plate.

CAUTION *The metal covers on the PRINTER and the GPIB connectors are loose. If the board is inverted, these covers will drop off.*

To replace the A12 Rear Panel assembly, perform the previous steps in the reverse process.

Note: *Replacement of connector J78 will be easier if you replace the connector before reinstalling the rear panel connector plate on the rear of the chassis.*

ManualsPlus.com

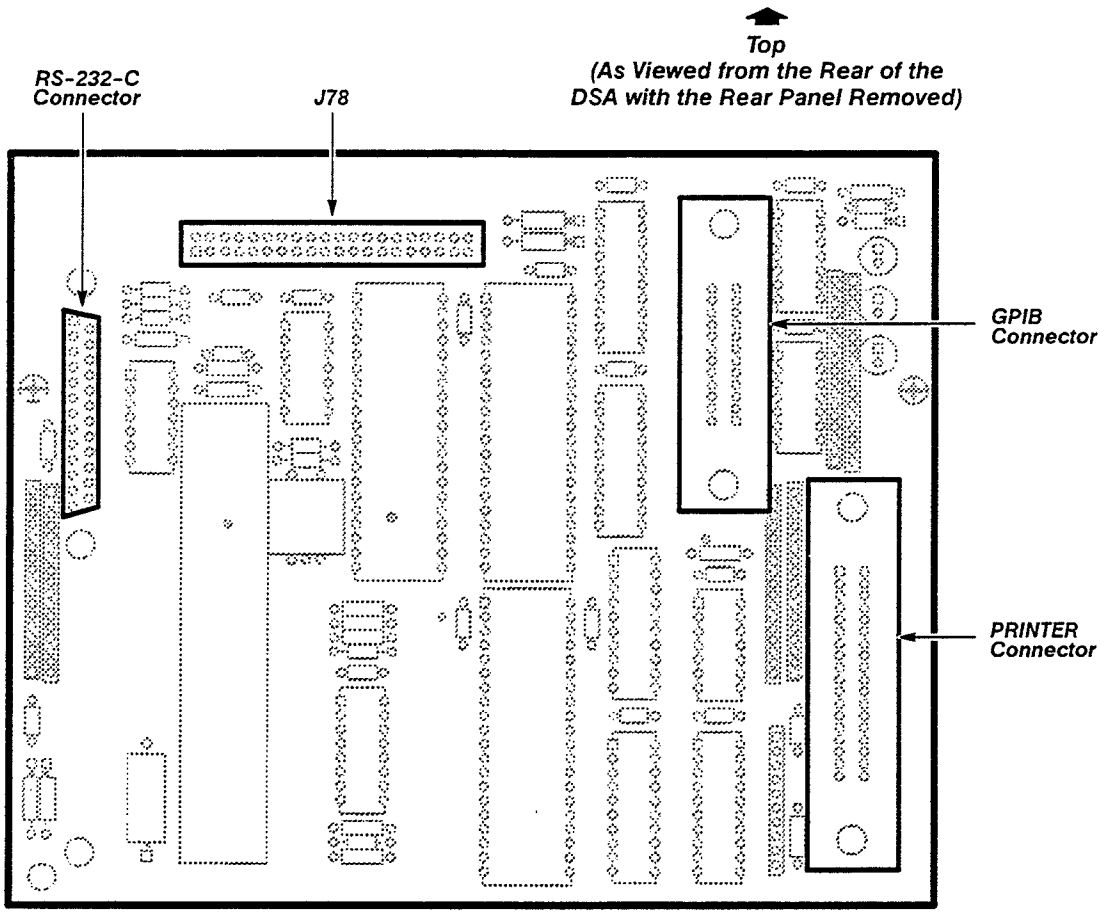

Figure 3-23 — *Removing/Replacing the A12 Rear Panel Assembly*

ManualsPlus.com

A13 Mother board—removal and replacement steps are listed below. See Figures 3-1, 3-5, 3-10, 3-24, 3-25, 3-26, 3-27, 3-28, 3-29, 3-30, 3-31 and 3-42 for connector, screw, and index locations.

- ☐ Step 1: Remove the six Torx head screws that secure the platform to the sides of the DSA.
- ☐ Step 2: Remove the two Torx head screws that are located on the top of the platform.
- ☐ Step 3: Raise the platform on its hinges, and then secure the platform with the support rod (refer to the instructions on the bottom of the platform).
- ☐ Step 4: Remove the two card cage screws located on the left side of the DSA to remove the two plastic card cage retainers from the top of the card cage.
- ☐ Step 5: Remove the A14 I/O, A15 MMU, A16 Display Controller, A17 Main Processor, A18 BB Memory, A19 Digitizer CPU and A20 Digitizer I/O boards. Note the position of the multi-pin connector's index triangles to ensure that you can correctly replace these connectors.

  Note: *Tag the interconnecting plugs and mark the board locations to ensure that the plugs can be correctly replaced as well.*

- ☐ Step 6: Remove connector J63B from the A13 Mother board.
- ☐ Step 7: Remove the six Torx head screws that secure the A13 Mother board to the chassis.
- ☐ Step 8: Remove the A13 Mother board.

To replace the A13 Mother board, perform the previous steps in the reverse process.

CAUTION *Take care not to pinch the wires along the inside edge of the card cage while replacing this board.*

ManualsPlus.com

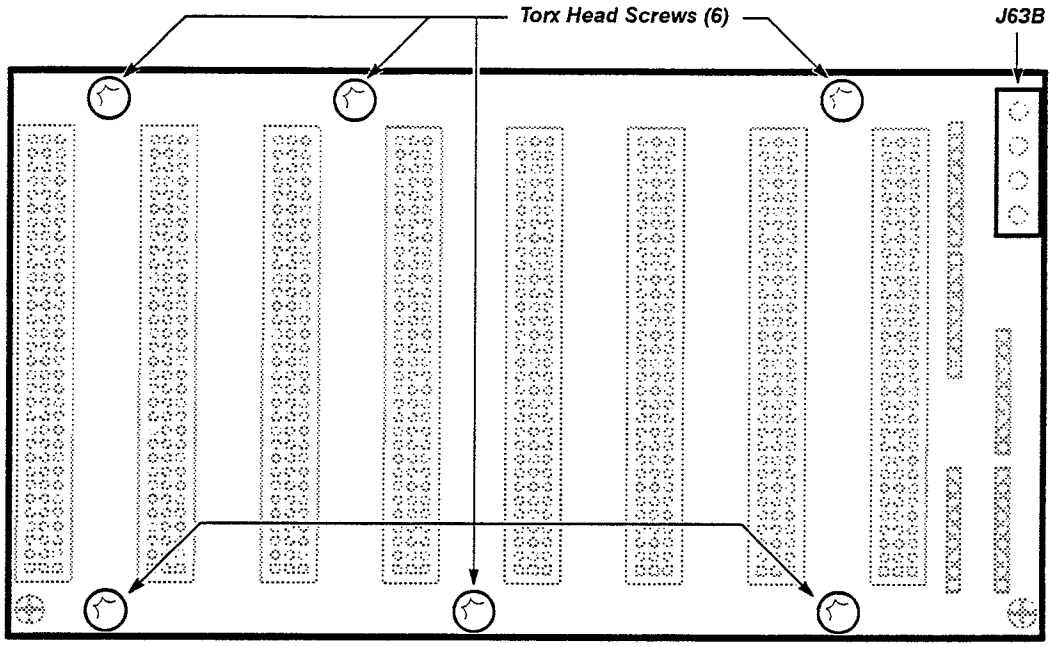

Figure 3-24 — *Removing/Replacing the A13 Mother Board*

ManualsPlus.com

A14 Input/Output (I/O) board—removal and replacement steps are listed below. See Figures 3-1, 3-5, 3-10, 3-25, 3-30, 3-31 and 3-42 for connector, screw, and index locations.

- ☐ Step 1: Remove the six Torx head screws that secure the platform to the sides of the DSA.
- ☐ Step 2: Remove the two Torx head screws that are located on the top of the platform.
- ☐ Step 3: Raise the platform on its hinges, and then secure the platform with the support rod (refer to the instructions on the bottom of the platform).
- ☐ Step 4: Remove the two card cage retainer screws located on the left side of the DSA to remove the two plastic card cage retainers from the top of the card cage.
- ☐ Step 5: Disconnect connectors J47 and J48 from the A19 Digitizer CPU board.

  Note: *Note the position of all multi-pin connector's index triangles on the connectors you remove to ensure that you can correctly replace these connectors*

- ☐ Step 6: Disconnect connectors J28 and J83 from the A29 Digitizer I/O board.
- ☐ Step 7: Disconnect connectors J72, J77, J78, and J90 from the A14 I/O board.
- ☐ Step 8: Lift the white, hinged tab at the upper, front edge of the board. Pull the tab upward until the A14 I/O board separates from the A13 Mother board.
- ☐ Step 9: Remove the A14 I/O board.

ManualsPlus.com

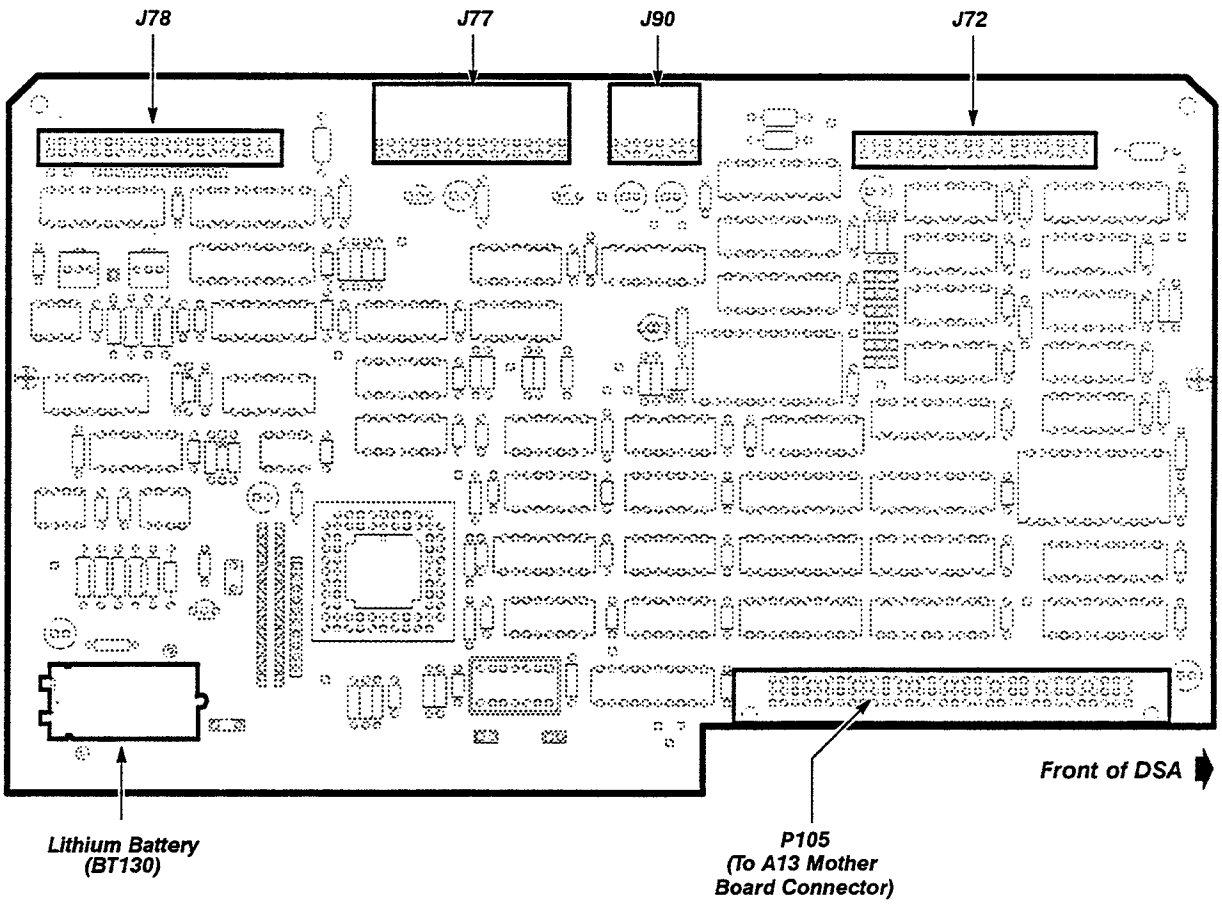

Figure 3-25 — Removing/Replacing the A14 I/O Board

WARNING

A lithium battery (BT130) is mounted on the A14 I/O board. ***This battery requires special handling for disposal.*** *Refer to the instructions on Lithium Battery Disposal and First Aid earlier in this section. Care is required when placing the A14 I/O board on metal surfaces. If some IC or battery leads are shorted the battery may discharge or overheat and vent. (Plastic standoffs are used to prevent shorts.)*

To replace the A14 I/O board, perform the previous steps in the reverse process.

Note: *Insert the board edges into the plastic guides at each end of the card cage. Lower the board into position.*

Ensure that connector P105 on the A14 I/O board is seated on the A13 Mother board connector. Push down firmly on the A14 I/O board to connect this connector to the A13 Mother board.

ManualsPlus.com

A15 Memory Manager Unit (MMU) board—removal and replacement steps are listed below. See Figures 3-1, 3-5, 3-10, 3-25, 3-26, 3-30, 3-31 and 3-42 for connector, screw, and index locations.

- ☐ Step 1: Remove the six Torx head screws that secure the platform to the sides of the DSA.
- ☐ Step 2: Remove the two Torx head screws that are located on the top of the platform.
- ☐ Step 3: Raise the platform on its hinges, and then secure the platform with the support rod (refer to the instructions on the bottom of the platform).
- ☐ Step 4: Raise the platform on its hinges, and then secure the platform with the support rod (refer to the instructions on the bottom of the platform).
- ☐ Step 5: Remove the two card cage retainer screws located on the left side of the DSA to remove the two plastic card cage retainers from the top of the card cage.
- ☐ Step 6: Disconnect connectors J47 and J48 from the A19 Digitizer CPU board.

  Note: *Note the position of all multi-pin connector's index triangles on the connectors you remove to ensure that you can later correctly replace these connectors*

- ☐ Step 7: Disconnect connector J28 from the A20 Digitizer I/O board.
- ☐ Step 8: Disconnect connectors J79 and J83 from the A15 MMU board.
- ☐ Step 9: Disconnect connectors J72 and J90 from the A14 I/O board.
- ☐ Step 10: Lift the white, hinged tabs at the front and rear edges of the A15 MMU board. Pull the tabs upward until the A15 MMU board separates from the A13 Mother board.
- ☐ Step 11: Remove the A15 MMU board.

To replace the A15 MMU board, perform the previous steps in the reverse process.

Note: *Insert the board edges into the plastic guides at each end of the card cage. Lower the board into position.*

Ensure that connector P101 on the A15 MMU board is seated onto the A13 Mother board connector. Push down firmly on the A15 MMU board to connect this connector to the A13 Mother board.

ManualsPlus.com

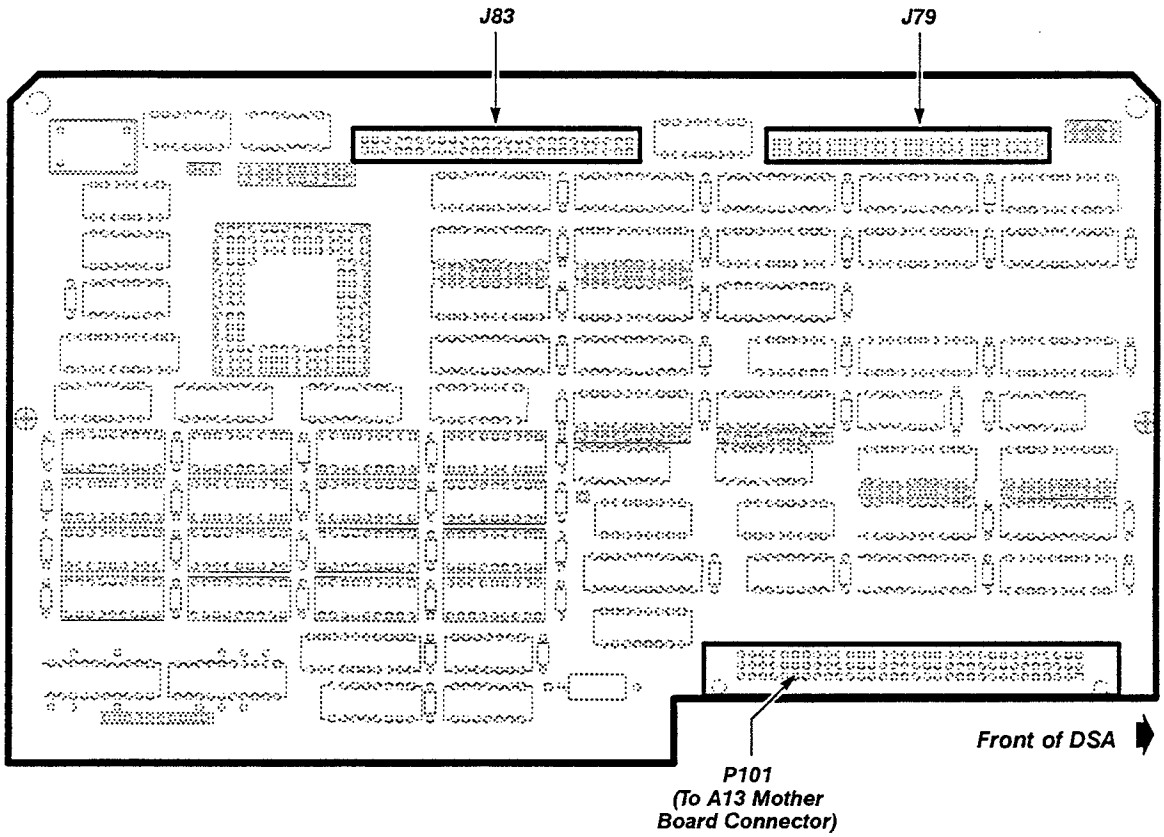

Figure 3-26 — Removing/Replacing the A15 MMU Board

ManualsPlus.com

A16 Display Controller board—removal and replacement steps are listed below. See Figures 3-1, 3-5, 3-8, 3-25, 3-27, 3-30, 3-31 and 3-42 for connector, screw, and index locations.

- ☐ Step 1: Remove the six Torx head screws that secure the platform to the sides of the DSA.
- ☐ Step 2: Remove the two Torx head screws that are located on the top of the platform.
- ☐ Step 3: Raise the platform on its hinges, and then secure the platform with the support rod (refer to the instructions on the bottom of the platform).
- ☐ Step 4: Remove the two card cage retainer screws located on the left side of the DSA to remove the two plastic card cage retainers from the top of the card cage.
- ☐ Step 5: Disconnect connectors J47 and J48 from the A19 Digitizer CPU board.

  Note: ***Note:*** Note the position of all multi-pin connector's index triangles on the connectors you remove to ensure that you can later correctly replace these connectors

- ☐ Step 6: Disconnect connector J28 from the A20 Digitizer I/O board.
- ☐ Step 7: Disconnect connectors J53, J54, and J79 from the A16 Display Controller board.
- ☐ Step 8: Disconnect connectors J72 and J90 from the A14 I/O board.
- ☐ Step 9: Lift the white, hinged tabs at the front and rear edges of the board. Pull the tabs upward until the A16 Display Controller board separates from the A13 Mother board.
- ☐ Step 10: Remove the A16 Display Controller board.

ATTENTION

If an FRU (field replaceable unit) being replaced contains firmware, the ***firmware must be removed from the old FRU and installed on the new FRU****. The replacement assemblies (FRUs) will not have any firmware installed from the factory or Module Repair station.*

To replace the A16 Display Controller board, perform the previous steps in the reverse order.

Note: ***Note:*** Insert the board edges into the plastic guides at each end of the card cage. Lower the board into position.

Ensure that connector P100 on the A16 Display Controller board is seated onto the A13 Mother board connector. Push down firmly on the A16 Display Controller board to connect this connector to the A13 Mother board.

ManualsPlus.com

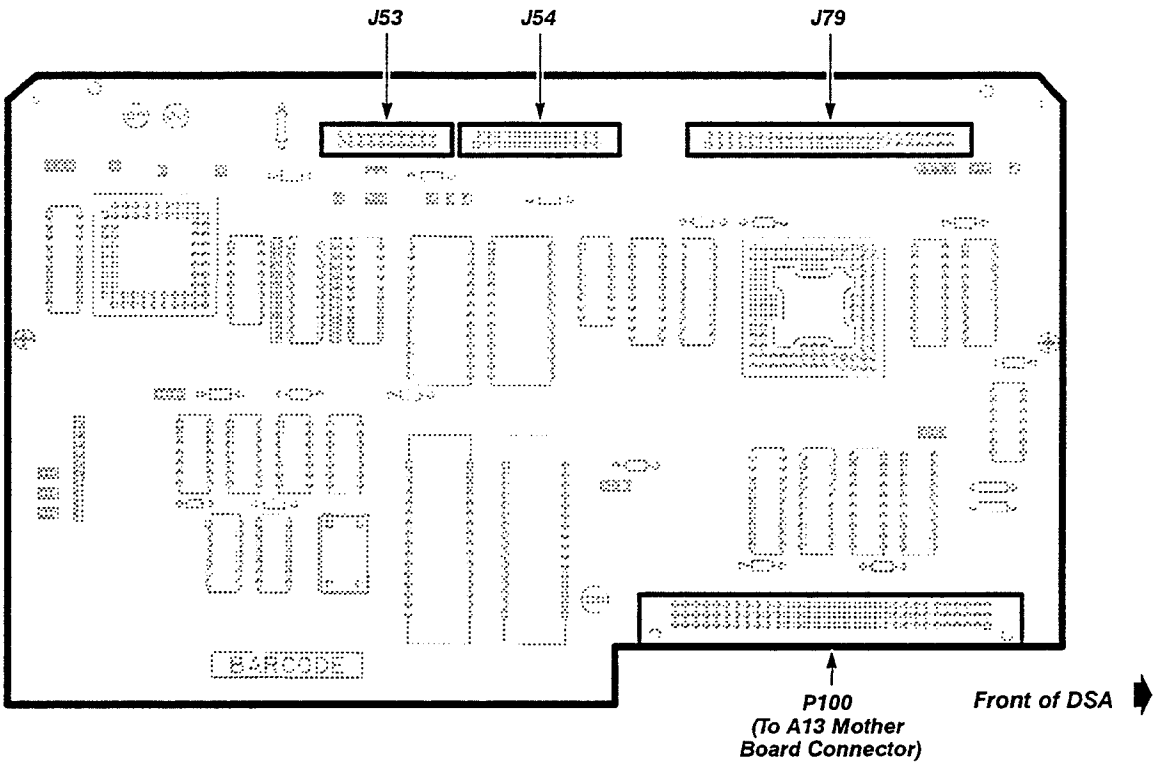

Figure 3-27 — Removing/Replacing the A16 Display Controller Board

ManualsPlus.com

A17 Main Processor board—removal and replacement steps are listed below. See Figures 3-1, 3-5, 3-8, 3-25, 3-28, 3-30, 3-31 and 3-42 for connector, screw, and index locations.

- ☐ Step 1: Remove the six Torx head screws that secure the platform to the sides of the DSA.
- ☐ Step 2: Remove the two Torx head screws that are located on the top of the platform.
- ☐ Step 3: Raise the platform on its hinges, and then secure the platform with the support rod (refer to the instructions on the bottom of the platform).
- ☐ Step 4: Remove the two card cage retainer screws located on the left side of the DSA to remove the two plastic card cage retainers from the top of the card cage.
- ☐ Step 5: Disconnect connectors J47 and J48 from the A19 Digitizer CPU board.

  Note: ***Note:*** Note the position of all multi-pin connector's index triangles on the connectors you remove to ensure that you can later correctly replace these connectors

- ☐ Step 6: Disconnect connectors J28 and J83 from the A20 Digitizer I/O board.
- ☐ Step 7: Disconnect connectors J72, J78 and J90 from the A14 I/O board.
- ☐ Step 8: Disconnect connector J77 from the A17 Main Processor board.
- ☐ Step 9: Lift the white, hinged tabs at the front and rear edges of the board. Pull the tabs upward until the A17 Main Processor board separates from the A13 Mother board.
- ☐ Step 10: Remove the A17 Main Processor board.

WARNING

A lithium battery (BT160) is mounted on the A17 Main Processor board. ***The battery requires special handling for disposal.*** *Refer to the instructions on Lithium Battery Disposal and First Aid earlier in this section. Care is required when placing the A17 Main Processor board on metal surfaces. If some IC or battery leads are shorted, the battery may discharge or overheat and vent. (Plastic standoffs are used to prevent shorts.)*

ATTENTION

If an FRU (field replaceable unit) being replaced contains firmware, the ***firmware must be removed from the old FRU and installed on the new FRU****. The replacement assemblies (FRUs) will not have any firmware installed from the factory or Module Repair station.*

To replace the A17 Main Processor board, perform the previous steps in the reverse process.

ManualsPlus.com

Note: *Insert the board edges into the plastic guides at each end of the card cage. Lower the board into position.*

Ensure that connector P104 on the A17 Main Processor board is seated on the A13 Mother board connector. Push down firmly on the A17 Main Processor board to connect this connector to the A13 Mother board.

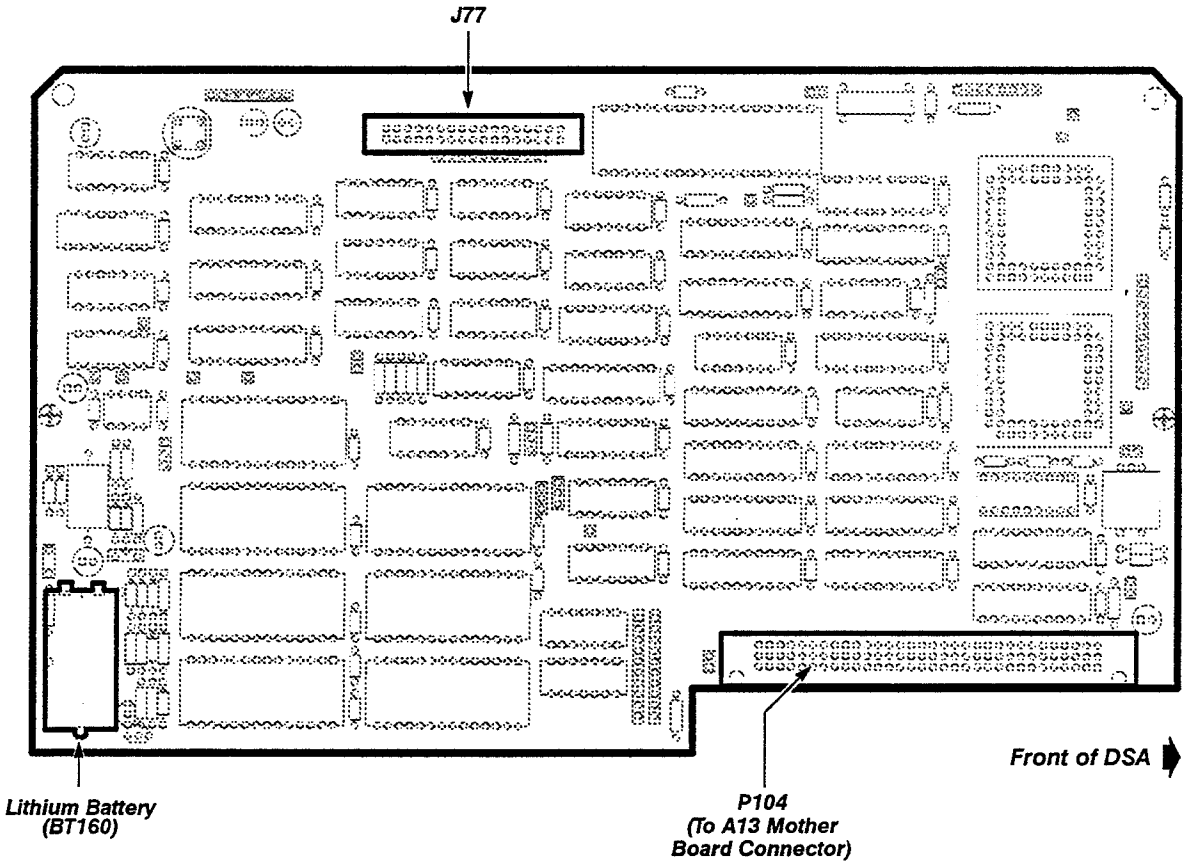

***Figure 3-28** — Removing/Replacing the A17 Main Processor Board*

ManualsPlus.com

A18 (Battery Back-up) BB Memory board—removal and replacement steps are listed below. See Figures 3-1, 3-5, 3-10, 3-25, 3-29, 3-30, 3-31, and 3-42 for connector, screw, and index locations.

- ☐ Step 1: Remove the six Torx head screws that secure the platform to the sides of the DSA.
- ☐ Step 2: Remove the two Torx head screws that are located on the top of the platform.
- ☐ Step 3: Raise the platform on its hinges, and then secure the platform with the support rod (refer to the instructions on the bottom of the platform).
- ☐ Step 4: Remove the two card cage retainer screws located on the left side of the DSA to remove the two plastic card cage retainers from the top of the card cage.
- ☐ Step 5: Disconnect connectors J47 and J48 from the A19 Digitizer CPU board.

  Note: *Note the position of all multi-pin connector's index triangles on the connectors you remove to ensure that you can later correctly replace these connectors.*

- ☐ Step 6: Disconnect connectors J28 and J83 from the A20 Digitizer I/O board.
- ☐ Step 7: Disconnect connectors J72 and J90 from the A14 I/O board.
- ☐ Step 8: Lift the white, hinged tabs at the front and rear edges of the board. Pull the tabs upward until the A18 BB Memory board separates from the A13 Mother board.
- ☐ Step 9: Remove the A18 BB Memory board.

ATTENTION *If an FRU (field replaceable unit) being replaced contains firmware, the* ***firmware must be removed from the old FRU and installed on the new FRU****. The replacement assemblies (FRUs) will not have any firmware installed from the factory or Module Repair station.*

To replace the A18 BB Memory board, perform the previous steps in the reverse process.

Note: *Insert the edges of the board into the plastic guides at each end of the card cage. Lower the board into position.*

Ensure that connector P106 on the A18 BB Memory board is seated on the A13 Mother board connector. Push down firmly on the A18 BB Memory board to connect this connector to the A13 Mother board.

ManualsPlus.com

WARNING

If your DSA is equipped with Option 4C, then a lithium battery (BT150) is mounted on the A18 BB Memory board. ***The battery requires special handling for disposal****. Refer to the instructions on Lithium Battery Disposal and First Aid earlier in this section. Care is required when placing the A18 BB Memory board on metal surfaces. If some IC or battery leads are shorted, the battery may discharge or overheat and vent. (Plastic standoffs are used to prevent shorts.)*

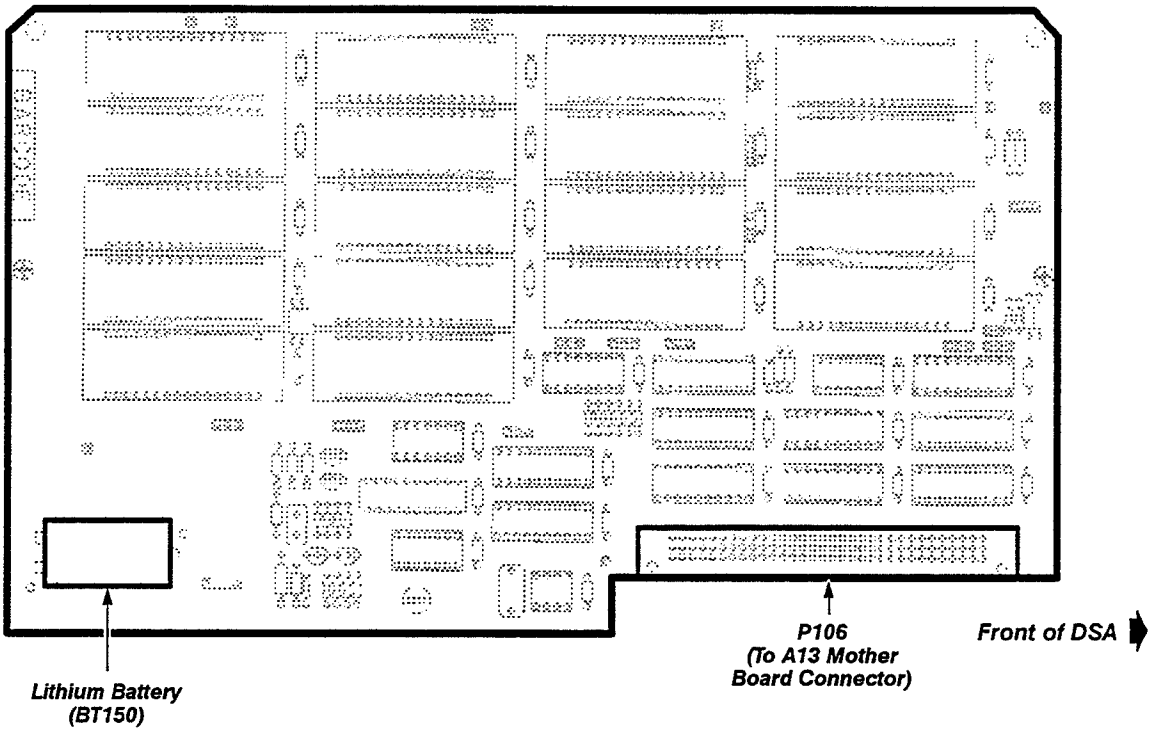

Figure 3-29 — Removing/Replacing the A18 BB Memory Board

ManualsPlus.com

A19 Digitizer CPU board—removal and replacement steps are listed below. See Figures 3-1, 3-5, 3-10, 3-30, and 3-42 for connector, screw, and index locations.

- ☐ Step 1: Remove the six Torx head screws that secure the platform to the sides of the DSA.
- ☐ Step 2: Remove the two Torx head screws that are located on the top of the platform.
- ☐ Step 3: Raise the platform on its hinges, and then secure the platform with the support rod (refer to the instructions on the bottom of the platform).
- ☐ Step 4: Remove the two card cage retainer screws located on the left side of the DSA to remove the two plastic card cage retainers from the top of the card cage.
- ☐ Step 5: Disconnect connectors J47 and J48 from the A19 Digitizer CPU board. Note the position of the multi-pin connector's index triangles to ensure that you can correctly replace these connectors.
- ☐ Step 6: Lift the white, hinged tabs at the front and rear edges of the board. Pull the tabs upward until the A19 Digitizer CPU board separates from the A13 Mother board and A21 Mini Mother board.
- ☐ Step 7: Remove the A19 Digitizer CPU board.

ATTENTION *If an FRU (field replaceable unit) being replaced contains firmware, the* ***firmware must be removed from the old FRU and installed on the new FRU****. The replacement assemblies (FRUs) will not have any firmware installed from the factory or Module Repair station.*

To replace the A19 Digitizer CPU board, perform the previous steps in the reverse process.

Note: *Insert the edges of the board into the plastic guides at each end of the card cage. Lower the board into position.*

Ensure that connectors P117 and P118 on the A19 Digitizer CPU board are seated on the A13 Mother board and the A21 Mini Mother board connectors, respectively. Push down firmly on the A19 Digitizer CPU board to connect these connectors.

ManualsPlus.com

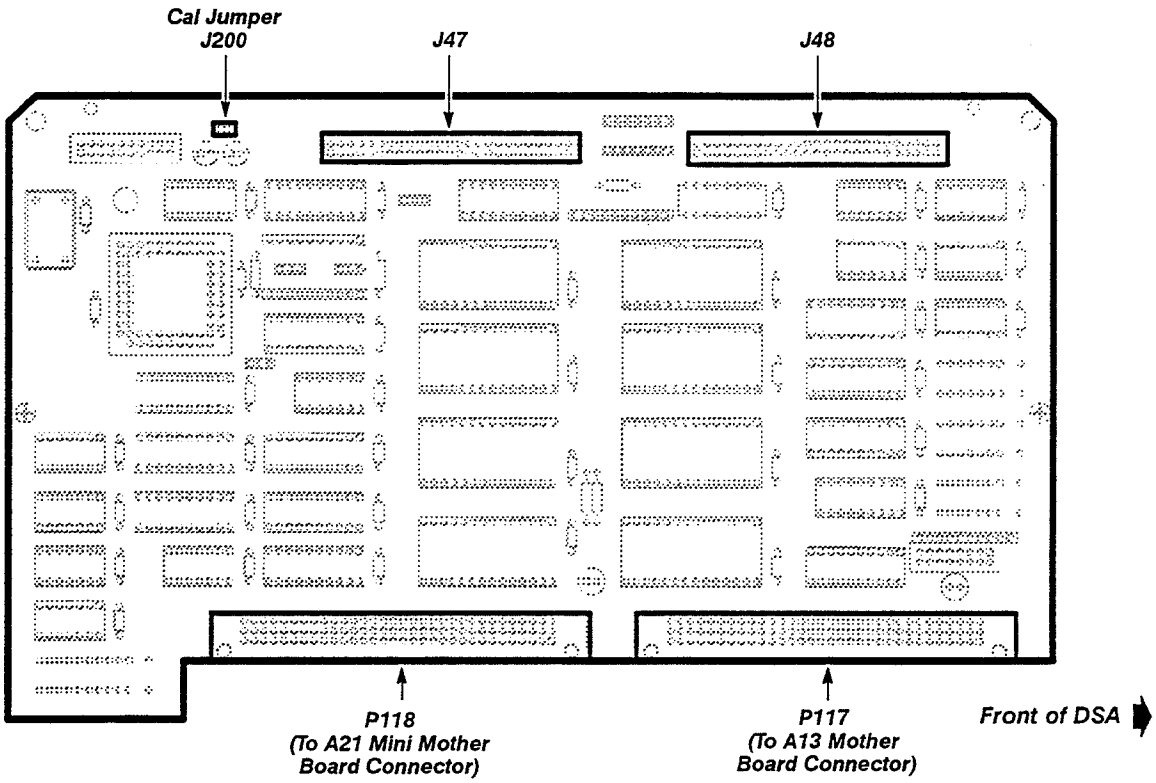

Figure 3-30 — *Removing/Replacing the A19 Digitizer CPU Board*

ManualsPlus.com

A20 Digitizer (Input/Output) I/O board—removal and replacement steps are listed below. See Figures 3-1, 3-5, 3-10, 3-30, 3-31, and 3-42 for connector, screw, and index locations.

- ☐ Step 1: Remove the six Torx head screws that secure the platform to the sides of the DSA.
- ☐ Step 2: Remove the two Torx head screws that are located on the top of the platform.
- ☐ Step 3: Raise the platform on its hinges, and then secure the platform with the support rod (refer to the instructions on the bottom of the platform).
- ☐ Step 4: Remove the two card cage retainer screws located on the left side of the DSA to remove the two plastic card cage retainers from the top of the card cage.
- ☐ Step 5: Disconnect connectors J47 and J48 from the A19 Digitizer CPU board. Note the position of the multi-pin connector's index triangles to ensure that you can correctly replace these connectors.
- ☐ Step 6: Disconnect connectors J28 and J83 from the A20 Digitizer I/O board. Note the position of the multi-pin connector's index triangles to ensure that you can correctly replace these connectors.
- ☐ Step 7: Lift the white, hinged tabs at the front and rear edges of the board. Pull the tabs upward until the A20 Digitizer I/O board separates from the A13 Mother board.
- ☐ Step 8: Remove the A20 Digitizer I/O board.

To replace the A20 Digitizer I/O board, perform the previous steps in the reverse process.

Note: *Insert the edges of the board into the plastic guides at each end of the card cage. Lower the board into position.*

Ensure that connector P116 and P119 on the A20 Digitizer I//O board are seated on the A13 Mother board and A21 Mini Mother board connectors, respectively. Push down firmly on the A20 Digitizer I/O board to connect these connectors.

ManualsPlus.com

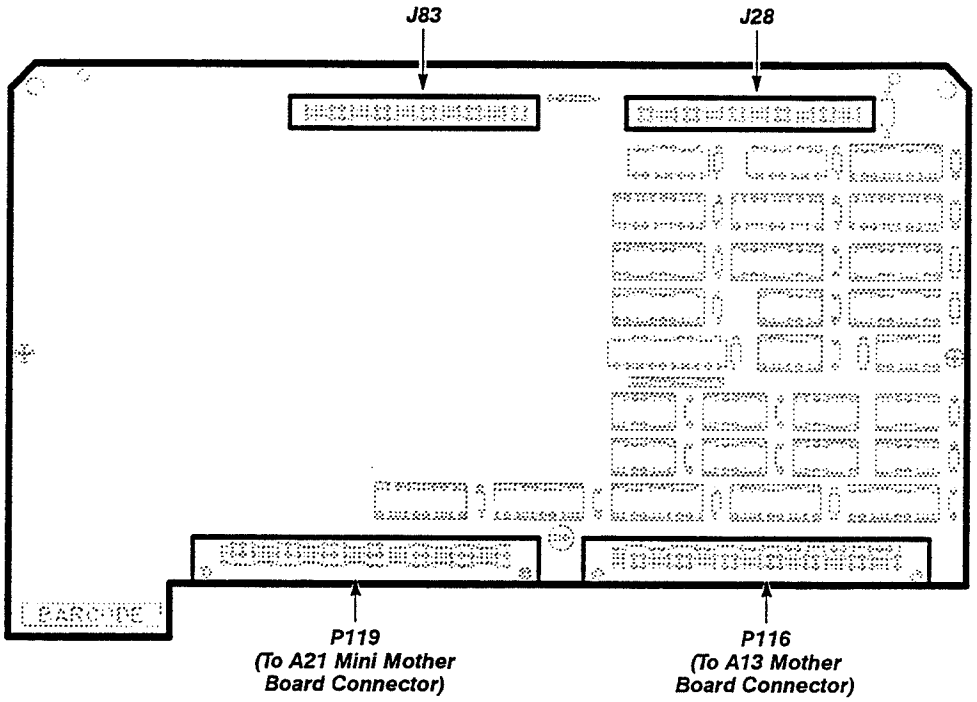

Figure 3-31 — Removing/Replacing the A20 Digitizer I/O board

ManualsPlus.com

A21 Mini Mother board—removal and replacement steps are listed below. See Figures 3-1, 3-5, 3-10, 3-25, 3-30, 3-31, 3-32 and 3-42 for connector, screw, and index locations.

- ☐ Step 1: Remove the six Torx head screws that secure the platform to the sides of the DSA.
- ☐ Step 2: Remove the two Torx head screws that are located on the top of the platform.
- ☐ Step 3: Raise the platform on its hinges, and then secure the platform with the support rod (refer to the instructions on the bottom of the platform).
- ☐ Step 4: Remove the two card cage retainer screws located on the left side of the DSA to remove the two plastic card cage retainers from the top of the card cage.
- ☐ Step 5: Remove the A19 Digitizer CPU board, the A20 Digitizer I/O board, and the A14 I/O board.
- ☐ Step 6: Remove the three Torx head screws that fasten the A21 Mini Mother board to the chassis.
- ☐ Step 7: Remove the A21 Mini Mother board.

To replace the A21 Mini Mother board, perform the previous steps in the reverse process.

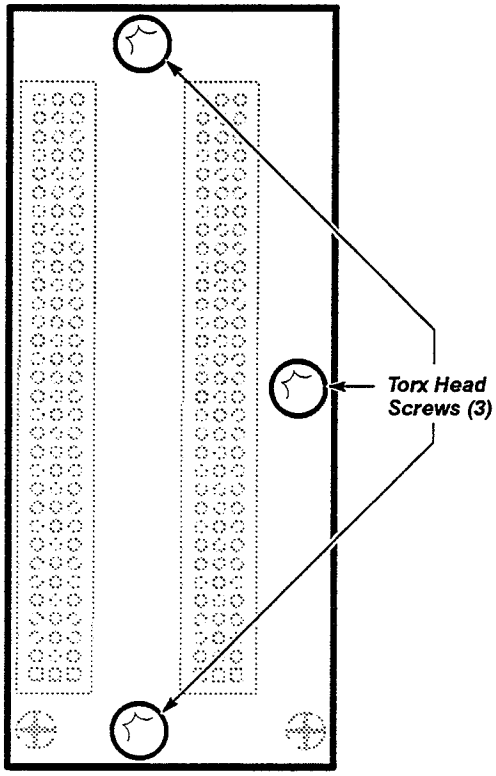

***Figure 3-32** — Removing/Replacing the A21 Mini Mother Board*

ManualsPlus.com

A24 CRT Driver board—removal and replacement steps are listed below. See Figures 3-1, 3-4, 3-5, 3-33, 3-34, and 3-42 for connector, screw, and index locations.

☐ Step 1: Set the DSA so that it's left side faces up.

☐ Step 2: Remove the front and rear decorative trim covers on the left side of the DSA.

☐ Step 3: Remove the four Torx head screws that secure the left frame section, and then remove the frame section.

☐ Step 4: Remove the three Torx head screws at the front of the trap door located beneath the A24 CRT Driver board.

CAUTION

Do not remove the three Torx head screws at the rear of the trap door. See Figure 3-33 to ensure that you are removing the appropriate Torx head screws on the trap door.

☐ Step 5: Remove the two Torx head screws that secure the A24 CRT Driver board on the left side of the DSA.

☐ Step 6: Partially open the trap door located beneath the A24 CRT Driver board and disconnect connectors J30, J40, J76 and J94 from the A24 CRT Driver board. Note the position of the multi-pin connector's index triangles to ensure that you can correctly replace these connectors.

☐ Step 7: Open the trap door slightly further, than in step 6 and disconnect connectors J33, J34, J53 and J54 from the A24 CRT Driver board. Note the position of the multi-pin connector's index triangles to ensure that you can correctly replace these connectors.

☐ Step 8: Use a non-conducting tool to pry up the anode lead cap on the CRT. (The anode lead cap is accessed through the small hole in the left side of the chassis.) Release the spring clip inside the cap to remove the anode lead.

WARNING

A stored charge can accumulate in the CRT after the anode lead is removed. After removing the anode lead and before replacing the anode lead, ground the CRT to the chassis. Insert one blade of a needle-nose pliers in the small hole referred to in Step 8, and the other blade to the DSA chassis.

☐ Step 9: Open the trap door slightly further than in Step 7, and disconnect connectors J31, J35, and J36 from the A24 CRT Driver board. Note the position of the multi-pin connector's index triangles to ensure that you can correctly replace these connectors.

☐ Step 10: Remove the nine Torx head screws that secure the A24 CRT Driver board to the CRT Driver trap door.

☐ Step 11: Remove the A24 CRT Driver board.

To replace the A24 CRT Driver board, perform the previous step in the reverse process.

ManualsPlus.com

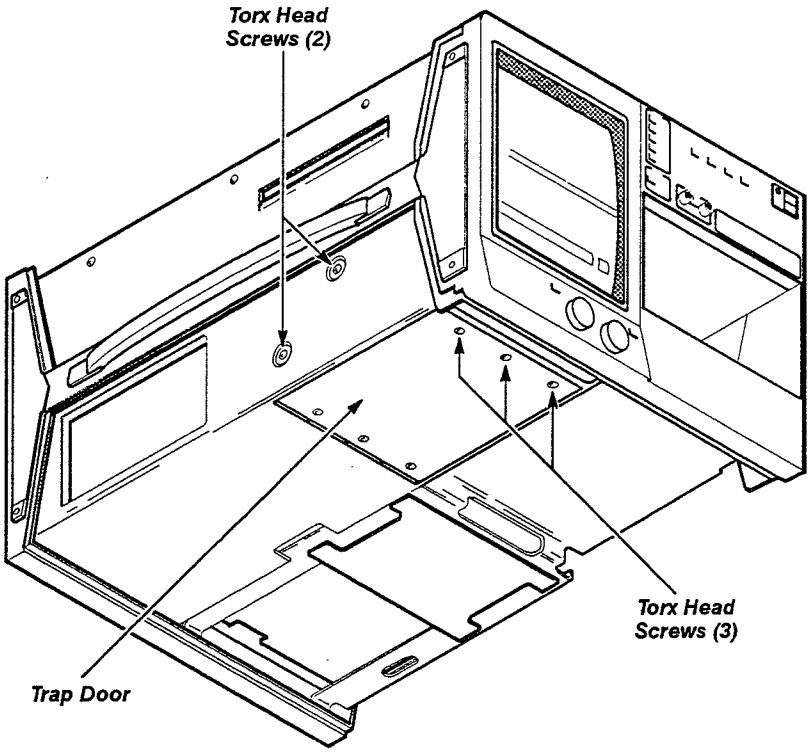

Figure 3-33 — *Removing/Replacing the Trap Door Torx Head Screws*

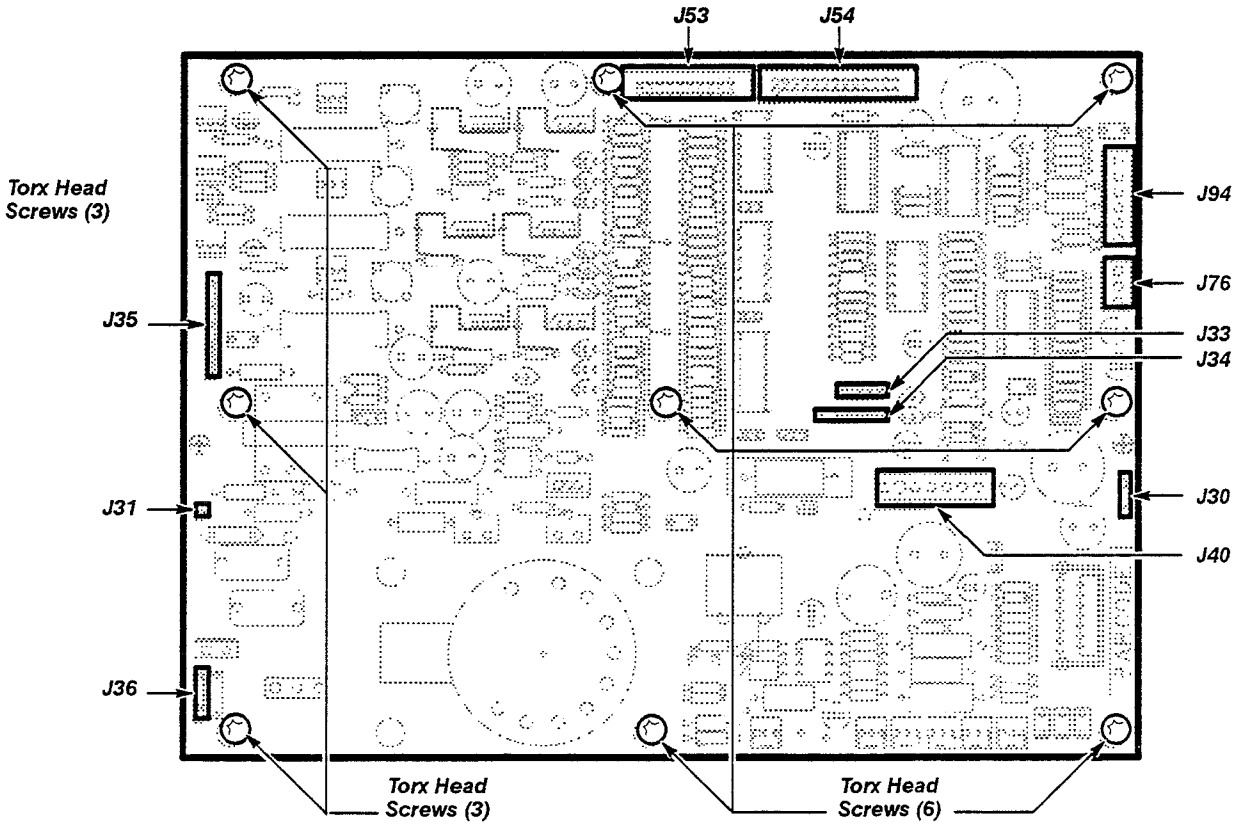

Figure 3-34 — *Removing/Replacing the A24 CRT Driver Board*

ManualsPlus.com

A25 Degauss board—removal and replacement steps are listed below. See Figures 3-1, 3-19, 3-20, 3-35, and 3-42 for connector, screw, and index locations.

- ☐ Step 1: Remove the A9 Touch Panel Assembly
- ☐ Step 2: Disconnect the two J32 connectors from the A25 Degauss board.
- ☐ Step 3: Remove the five Torx head screws that secure the A25 Degauss board to the chassis.
- ☐ Step 4: Remove the A25 Degauss board.

To replace the A25 Degauss board, perform the previous steps in the reverse process.

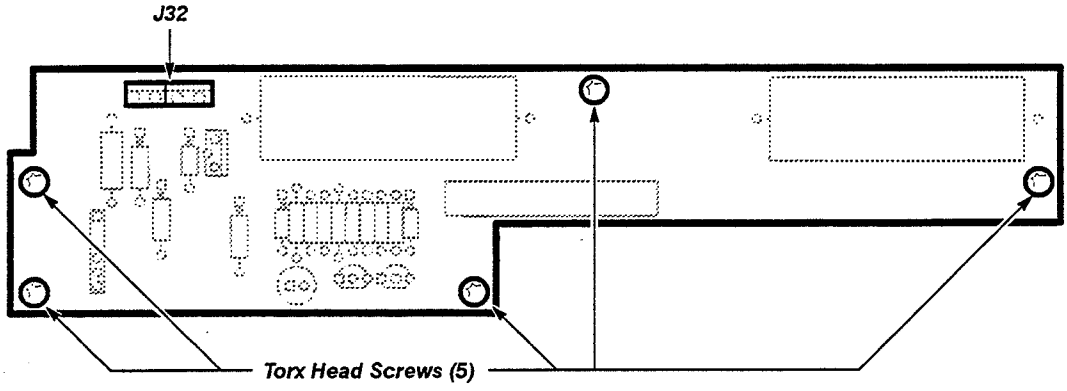

Figure 3-35 — Removing/Replacing the A25 Degauss Board

ManualsPlus.com

A26 Geometry board—removal and replacement steps are listed below. See Figures 3-2, 3-5, 3-36, and 3-42 for connector, screw, and index locations.

- ☐ Step 1: Remove the six Torx head screws that secure the platform to the sides of the DSA.
- ☐ Step 2: Remove the two Torx head screws that are located on the top of the platform.
- ☐ Step 3: Raise the platform on its hinges, and then secure the platform with the support rod (refer to the instructions on the bottom of the platform).
- ☐ Step 4: Remove the ten Torx head screws that secure the CRT shield to the chassis.
- ☐ Step 5: Push the CRT shield toward the rear of the DSA, and then lift the CRT shield out of the chassis.
- ☐ Step 6: Disconnect connectors J33 and J34 from the A26 Geometry board.
- ☐ Step 7: Remove the two Torx head screws that secure the A26 Geometry board to the chassis.

  Note: *To remove the two screws, use either a short Torx screwdriver or a Torx tip with a $^1/_4$-inch wrench.*

- ☐ Step 8: Lift the A26 Geometry board out of the plastic board guides located at the bottom of the board.
- ☐ Step 9: Remove the A26 Geometry board.

To replace the A26 Geometry board, perform the previous steps in the reverse process.

ManualsPlus.com

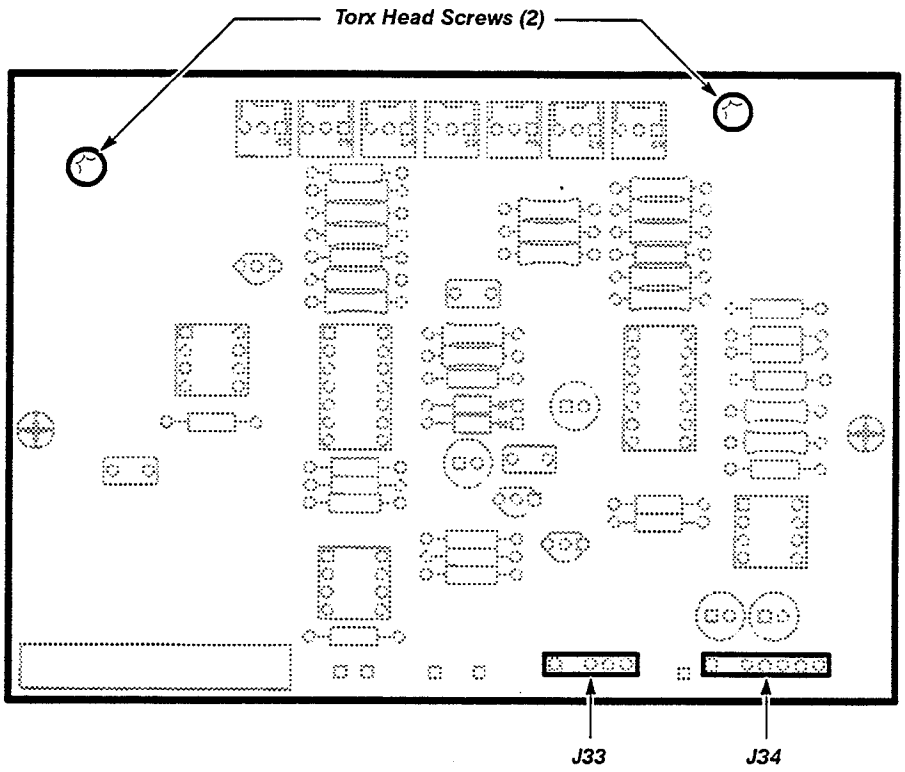

Figure 3-36 — *Removing/Replacing the A26 Geometry Board*

ManualsPlus.com

A27 CRT Socket board—removal and replacement steps are listed below. See Figures 3-1, 3-2, 3-3, 3-4, 3-5, 3-6, 3-19, 3-20, 3-34, 3-35, 3-37, and 3-42 for connector, screw, and index locations.

- ☐ Step 1: Remove the CRT.
- ☐ Step 2: Disconnect connectors J35, J36A, and J36B from the A27 CRT Socket board. Note the position of the multi-pin connector's index triangles to ensure that you can correctly replace these connectors.
- ☐ Step 3: Unscrew the Torx head screw that secures the green ground wire from the A27 CRT Socket board to the chassis.
- ☐ Step 4: Remove the A27 CRT Socket board.

To replace the A27 CRT Socket board, perform the previous steps in the reverse process.

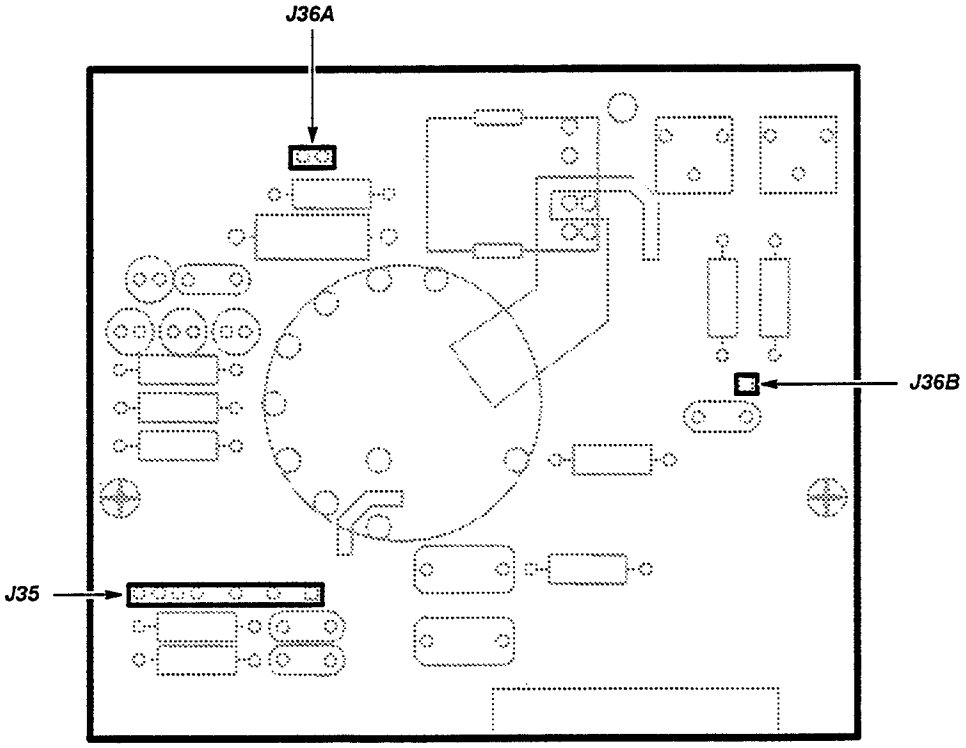

Figure 3-37 — Removing/Replacing the A27 CRT Socket Board

ManualsPlus.com

FRU IC Removal

The procedures for removing and replacing the FRU ICs in the DSA are outlined in this section.

The Serial Data Interface Integrated Circuit ("Slam-Pack" IC) (U330) – is mounted on the A14 I/O board. The IC has a raised, ridged, heat-sink cover. The IC is oriented to its socket by a beveled corner. The other corners are notched to fit the edges of the socket. The beveled corner aligns with a spring (small metal tab) at one corner of the socket.

See Figures 3-10, 3-38,and 3-39 for locating and indexing these ICs.

To remove the Serial Data Interface IC, proceed as follows:

- ☐ Step 1: Remove the A14 I/O board.
- ☐ Step 2: Hold the heat sink cover in place and unfasten the retaining clip by moving the retaining clip across the tabs, while pushing down slightly on the cover.

CAUTION *Observe all the special precautions mentioned under Static-Sensitive Classification earlier in this section.*

- ☐ Step 3: Remove the cover slowly to prevent the IC from dropping out. Note the position of the index on the IC so that you can later correctly replace the IC.
- ☐ Step 4: Remove the IC with tweezers.

CAUTION *Avoid touching the IC or its socket contacts with your fingers. Finger oils can degrade reliability.*

Replace the Serial Data Interface IC as follows:

- ☐ Step 5: Using tweezers, place the beveled corner of the replacement IC against the index spring (the original positioning of this index was noted in Step 3).

CAUTION *Do not damage the spring with the beveled corner. (Shorting of the two corner contacts could result.)*

- ☐ Step 6: Arrange the other corners, using the tweezers, to fit flush in the edges of the socket.
- ☐ Step 7: Set the cover flat on the IC; with the cover's end tabs properly aligned with, but not in, the mating recesses in the socket.
- ☐ Step 8: Push down on the cover, keeping it flat on the IC, and slide the cover end tabs into place. Hold the cover there while moving the retaining clip over the tabs at the other end of the cover.
- ☐ Step 9: Slightly pull on the cover to ensure that the cover is secure.
- ☐ Step 10: Replace the A14 I/O board.

ManualsPlus.com

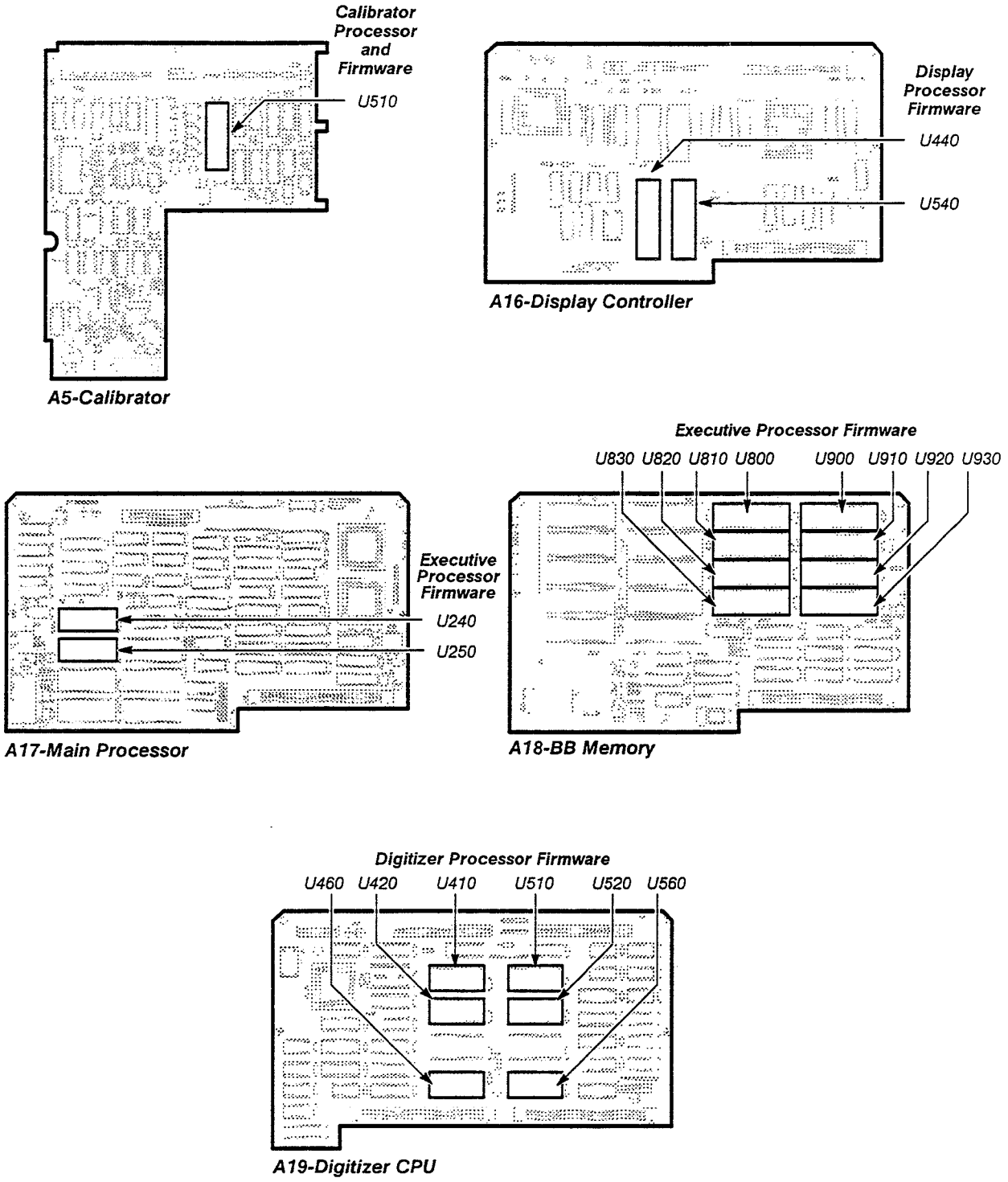

Figure 3-38 — FRU IC Detail

ManualsPlus.com

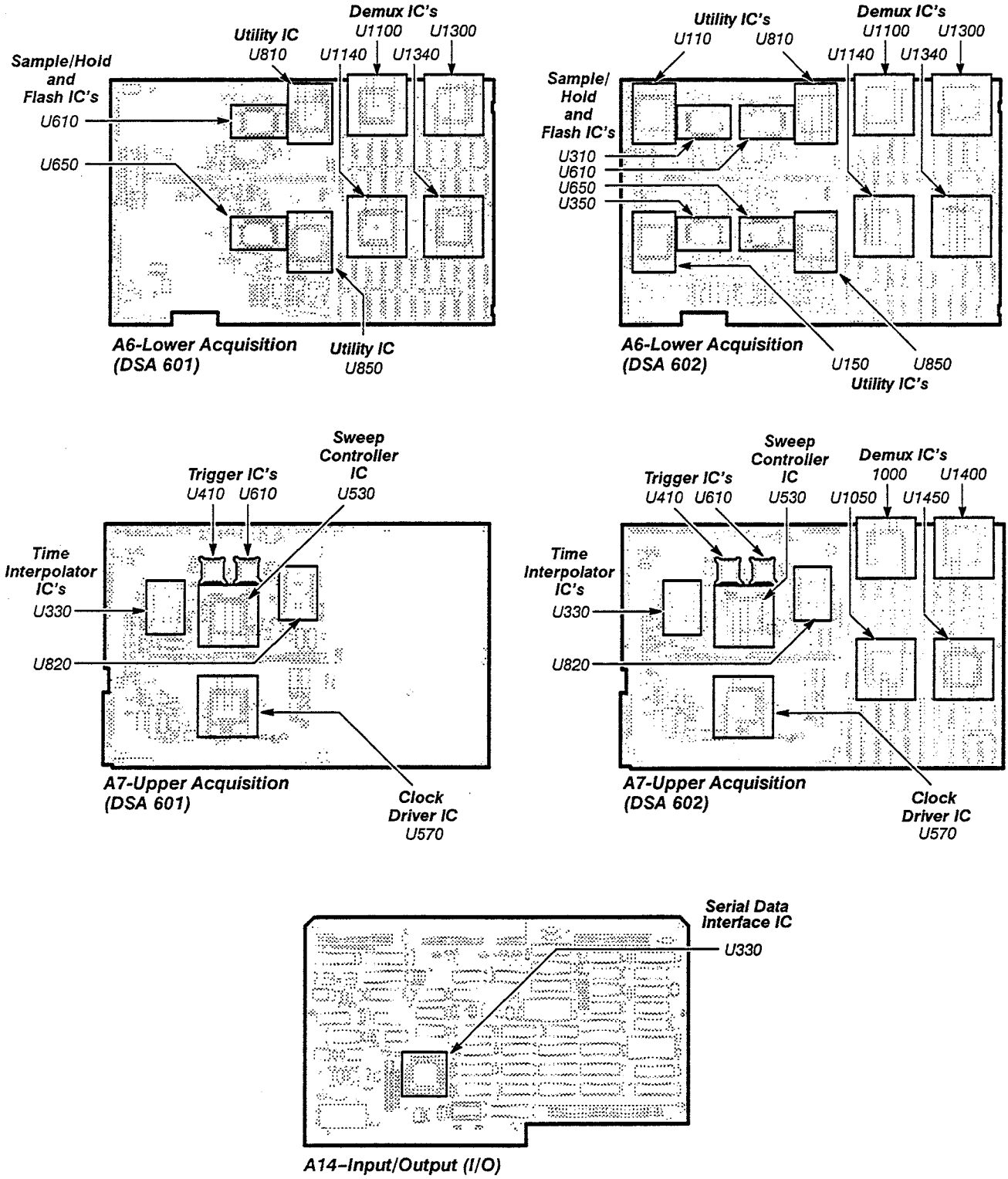

Figure 3-38 — FRU IC Detail (Cont.)

ManualsPlus.com

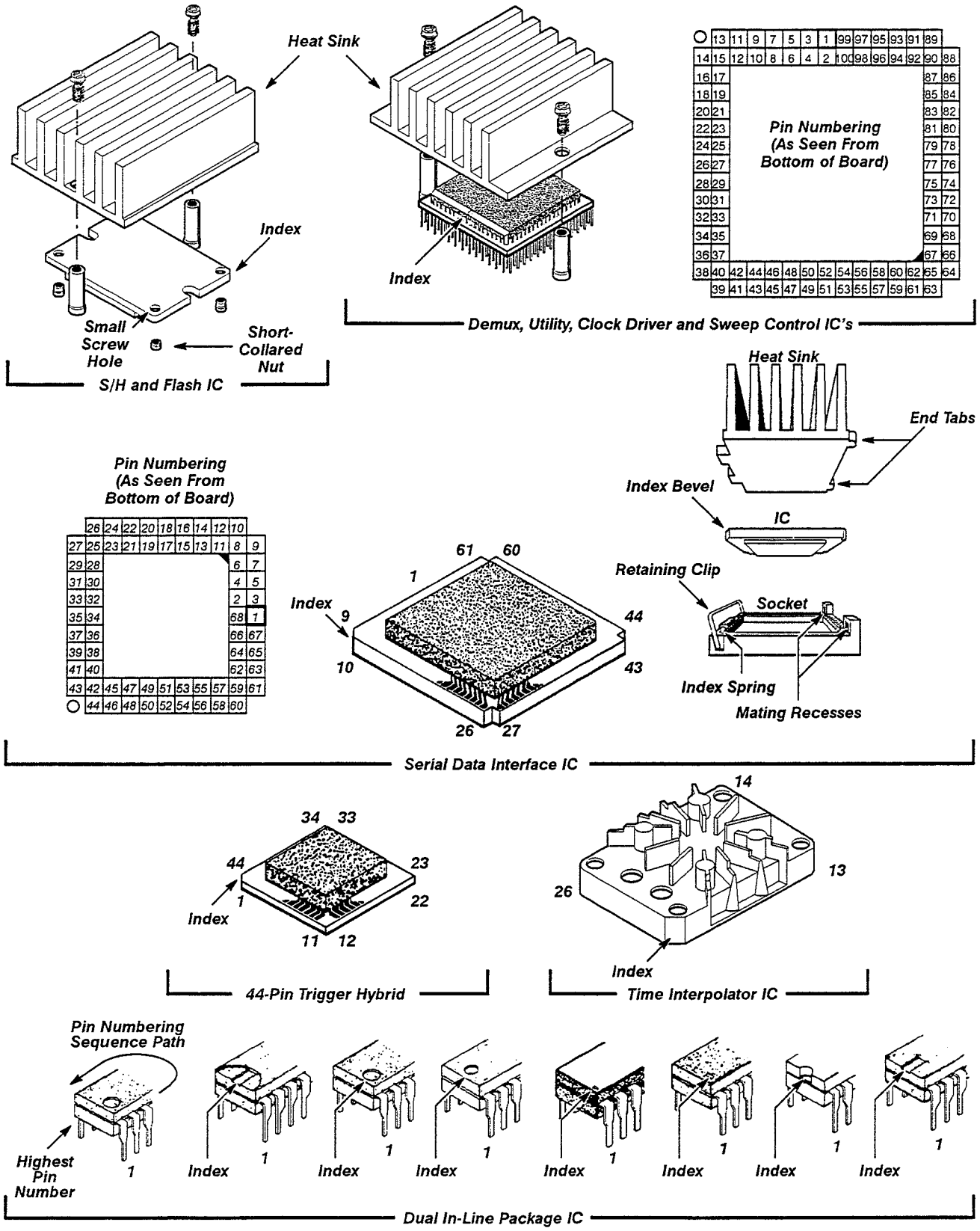

Figure 3-39 — *Semiconductor Indexing Diagram*

ManualsPlus.com

The Demux ICs, the Utility ICs, the Sweep Controller IC, and the Clock Driver ICs – are located on the A6 Lower Acquisition board and A7 Upper Acquisition board. Table 3-4 provides a list of these ICs, what FRU board they are located on, and which instrument (DSA 601 and/or DSA 602) the ICs are in.

Table 3-4 *– Demux, Utility, Sweep Controller, and Clock Driver IC Locator*

IC	IC #	FRU Board	DSA 601	DSA 602
Demux	U1000	A7 Upper Acquisition		✓
	U1050	A7 Upper Acquisition		✓
	U1100	A6 Lower Acquisition	✓	✓
	U1140	A6 Lower Acquisition	✓	✓
	U1300	A6 Lower Acquisition	✓	✓
	U1340	A6 Lower Acquisition	✓	✓
	U1400	A7 Upper Acquisition		✓
	U1450	A7 Upper Acquisition		✓
Utility	U110	A6 Lower Acquisition		✓
	U150	A6 Lower Acquisition		✓
	U810	A6 Lower Acquisition	✓	✓
	U850	A6 Lower Acquisition	✓	✓
Sweep Controller	U530	A7 Upper Acquisition	✓	✓
Clock Driver	U570	A7 Upper Acquisition	✓	✓

See Figures 3-1, 3-38, and 3-39 for locating and indexing these ICs.

To remove a Demux IC, Utility IC, Sweep Controller IC, or Clock Driver IC, proceed as follows:

☐ Step 1: Locate the IC to be removed on either the A6 Lower Acquisition board or A7 Upper Acquisition board.

Note: *If you are removing an IC on the A6 Lower Acquisition board, then raise the platform, and secure the platform with the support rod.*

☐ Step 2: Remove the two screws that secure the heat sink to the IC.

☐ Step 3: Remove the heat sink.

☐ Step 4: Use a tool with a sharp pointed end to pry up the beveled corner of the IC from the socket.

☐ Step 5: Use the same tool to pry an adjacent corner from the socket.

☐ Step 6: Carefully remove the IC.

CAUTION *Avoid touching the IC pins or the socket contacts with your fingers. Finger oils can lessen contact reliability.*

ManualsPlus.com

To replace a Demux IC, Utility IC, Sweep Controller IC, or Clock Driver IC, proceed as follows:

- ☐ Step 1: Align the small dot on one side of the IC (the index) with the small dot on the board.
- ☐ Step 2: Ensure that the beveled corner of the IC also aligns with outer beveled corner of the socket.
- ☐ Step 3: Ensure that all IC pins align correctly with their respective socket contacts.
- ☐ Step 4: Push down carefully on the IC to seat the IC in its socket.
- ☐ Step 5: Replace the heat sink.

Processor and Firmware IC (U510) – is located on the A5 Calibrator board.

See Figures 3-1, 3-38, and 3-39 for locating and indexing this IC.

To remove the Processor and Firmware IC, proceed as follows:

- ☐ Step 1: Grasp the IC with the insertion-extraction pliers shown in Figure 3-40. Refer to Table 2-2 for the part number of these pliers.
- ☐ Step 2: Position the pliers around the outside of the IC, squeeze the handles of the pliers to grasp the IC, and slowly pull the IC from the socket.

CAUTION *Avoid touching the IC pins or the socket contacts with your fingers. Skin oils can lessen contact reliability.*

To replace a Processor and Firmware IC, proceed as follows:

- ☐ Step 1: Grasp the replacement IC with the insertion-extraction pliers; ensuring that all the IC pins are straight and evenly spaced.
- ☐ Step 2: Align the index slot on the IC with the corresponding index on its socket.
- ☐ Step 3: Align the IC pins with their respective socket contacts, and push down slowly and evenly to seat the IC.

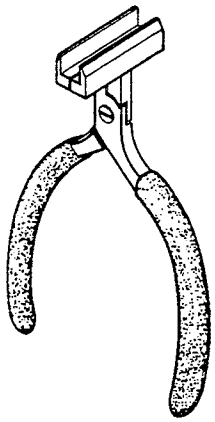

Figure 3-40 *— IC Insertion-Extraction Pliers*

ManualsPlus.com

The Sample/Hold and Flash ICs—are located on the A6 Lower Acquisition board. Table 3-5 provides a list of these ICs and which instrument (the DSA 601 or DSA 602) the ICs are in.

Table 3-5 — Sample/Hold and Flash IC Locator

IC	IC #	DSA 601	DSA 602
Sample/Hold and Flash	U310		✓
	U350		✓
	U610	✓	✓
	U650	✓	✓

See Figures 3-1, 3-38, and 3-39 for locating and indexing this ICs.

To remove a Sample/Hold and Flash IC, proceed as follows:

- ☐ Step 1: Remove the eight Torx head screws that secure the platform, and then raise the platform on its hinges.
- ☐ Step 2: Secure the platform with the support rod.
- ☐ Step 3: Remove the two screws that secure the heat sink to the IC.
- ☐ Step 4: Remove the heat sink.
- ☐ Step 5: Remove the four Torx head screws that secure the IC to the board.
- ☐ Step 6: Remove the Sample/Hold and Flash IC.

To replace a Sample/Hold and Flash IC, proceed as follows:

- ☐ Step 1: Orient the IC so that the beveled corner of the IC (the index) aligns with the arrow on the board and so that the small screw hole fits over the short collared nut.
- ☐ Step 2: Replace the four Torx head screws that secure the IC.
- ☐ Step 3: Replace the heat sink.

The Time Interpolator ICs (U330 and U820)—are located on the A7 Upper Acquisition board.

See Figures 3-1, 3-38 and 3-39 for locating and indexing this ICs.

To remove a Time Interpolator IC, proceed as follows:

- ☐ Step 1: Notice the orientation of the beveled corner of the heat sink on the board.
- ☐ Step 2: Remove the four nuts that secure the heat sink to the board.
- ☐ Step 3: Remove the heat sink from the board.

ManualsPlus.com

Note: *The IC is located inside the heat sink and should not be removed from the heat sink. When replacing the Time Interpolator IC, the heat sink and IC are replaced as a unit.*

To replace a Time Interpolator IC, proceed as follows:

☐ Step 1: Align the beveled corner of the heat sink (the index) to the index marker on the board.

☐ Step 2: Place the heat sink on the board so that all four screws protrude through the holes in the heat sink.

Note: *Ensure that the IC is properly seated in its socket. Securing the heat sink to the board when the IC is not properly seated will cause the IC break.*

☐ Step 3: Replace the four nuts on the heat sink.

The Trigger ICs (U410 and U610) – are located on the A7 Upper Acquisition board.

See Figures 3-1, 3-38, 3-39 and 3-41 for locating and indexing this ICs.

To remove a Trigger IC, proceed as follows:

☐ Step 1: Notice the index on the plastic frame (pointed tab) and its orientation on the board.

☐ Step 2: Unscrew and remove the four screw/washer assemblies that secure the plastic frame to the board.

☐ Step 3: Lift the plastic frame from the board.

☐ Step 4: Notice the index location of the hybrid and remove from the hybrid board with the tweezers.

Note: *Step 5 describes the removal of the elastomer from the plastic frame. This step is unnecessary when replacing only the hybrid.*

☐ Step 5: Notice the index location of the elastomer contact holder. Grasp and lift the corner of the contact holder with the tweezers to remove the holder from the plastic frame. Do not touch the gold-plated contacts with your fingers.

To replace a Trigger IC, proceed as follows:

☐ Step 1: Grasp a corner of the elastomer with the tweezers and place the elastomer into the plastic frame. Align the beveled corner of the elastomer with the beveled corner of the plastic frame. Tap the elastomer into the plastic frame uniformly.

Note: *Keeping the elastomer clean is very important. Small hairs and elastomer flash under the contacts, which are almost invisible to the naked eye, prevent good electrical contact. Do not touch the gold-plated contacts with your fingers.*

ManualsPlus.com

- ☐ Step 2: Place the hybrid into the plastic frame. Align the beveled corner of the hybrid with the beveled corner of the elastomer.
- ☐ Step 3: Place the plastic frame, with the hybrid installed, so that the key (pointed tab) is oriented the same way as when you remove the Trigger IC.

  Note: *It is impossible to orient the plastic frame incorrectly on the board since the screw holes will only align if the frame is oriented correctly.*

- ☐ Step 4: Insert the mounting hardware, and apply two inch-pounds of torque, (2.3 cm-kg) to secure the connector assembly. Do not overtighten the assembly. Overtightening the assembly will strip the microcircuit stiffener/heat sink mounting threads.

ManualsPlus.com

Exploded View of Hypcon Connector

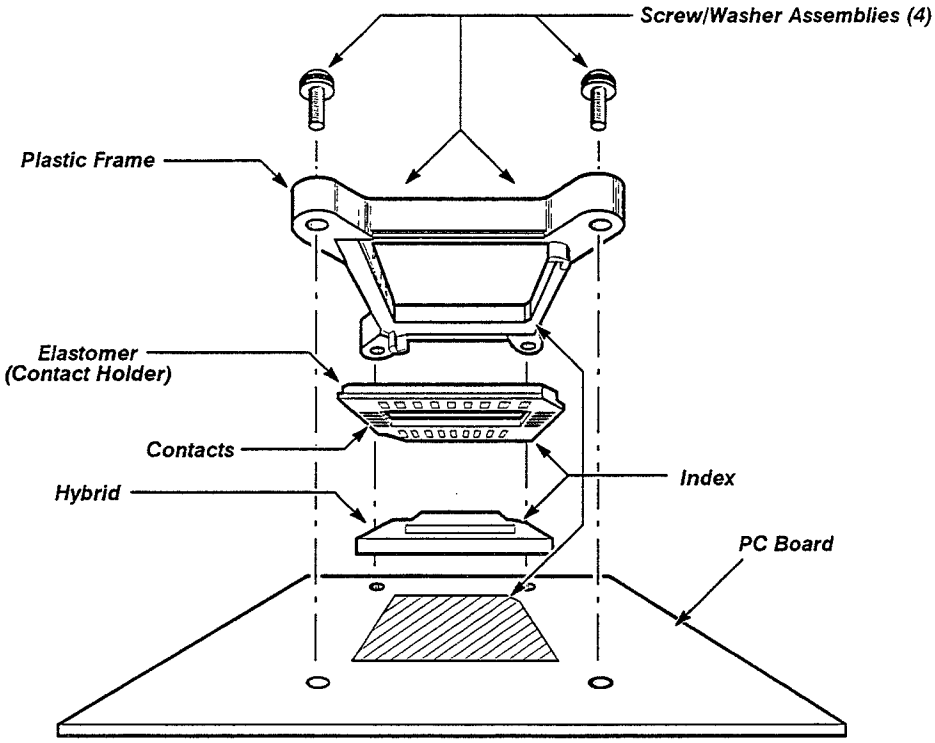

Cross Section View of Hypcon Connector

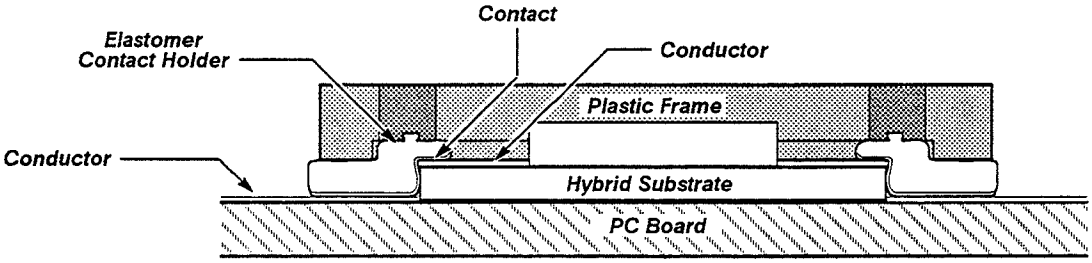

Figure 3-41 — *Trigger IC Assembly*

ManualsPlus.com

Firmware (FW) ICs ("Dual In-Line Package" ICs)—are located on four separate boards.

See Figure 3-1, 3-38 and 3-39 for locating and indexing these ICs.

The boards and their respective firmware (FW) are as follows:

- **A16 Display Controller board**—Display Processor FW (U540 and U440)
- **A17 Main Processor board**—Executive Processor FW (U240 and U250)
- **A18 BB Memory board**—Executive Processor FW (U800, U810, U820, U830, U900, U910, U920 and U930)
- **A19 Digitzer CPU board**—Digitizer Processor FW (U410, U420, U460, U510, U520, and U560)

All of the ICs listed above are ordered with a single Tektronix part number, as a single firmware kit. *Each IC cannot be ordered separately.* For the DSA 601, the firmware kit number is 020-1775-00 and the firmware kit number for the DSA 602 is 020-1776-00.

Note: *All stored settings and stored waveforms are lost when the DSA firmware is upgraded.*

To remove and replace the firmware ICs in your DSA perform the following procedures:

WARNING

You may be exposed to dangerous shock hazards when you remove the DSA covers. Before proceeding, ensure that the PRINCIPAL POWER SWITCH is in the OFF position. Then, disconnect the DSA from the power source. Disassembly should only be attempted by qualified service personnel.

CAUTION

Observe all the special precautions mentioned under Static-Sensitive Classification earlier in this section.

Preparing the DSA for the firmware upgrade procedure—requires the following steps:

☐ Step 1: Set the PRINCIPAL POWER SWITCH to OFF, and remove the power cord.

☐ Step 2: Leave the DSA upright up to provide access to boards where you are upgrading the firmware.

Note: *Use the IC insertion-extraction pliers shown in Figure 3-40 for removing and replacing the Firmware ICs. (Refer to Table 2-2 for the part number of these pliers.)*

Do not use the label on the IC as an index since it may be applied incorrectly. (See Fig. 3-39, for the correct location of the index on the IC.)

ManualsPlus.com

Accessing boards within the card cage—requires the following steps:

- ☐ Step 1: Remove the six Torx head screws that secure the platform to the sides of the DSA. See Figure 3-5 for the location of these screws.
- ☐ Step 2: Remove the two Torx head screws that are located on the top of the platform.
- ☐ Step 3: Raise the platform on its hinges, and then secure the platform with the support rod.
- ☐ Step 4: Remove the screws that secure the two card cage retainers. See Figure 3-10 for a top view of the card cage.
- ☐ Step 5: Remove the two plastic circuit board retainers from the top of the card cage.

Upgrading the A16 Display Controller board firmware—requires the following steps:

- ☐ Step 1: Remove the A16 Display Controller board from the card cage. The A16 Display Controller board is the right-most board in the card cage (as viewed from the front of the DSA).
- ☐ Step 2: On the A16 Display Controller board, replace ICs U440 and U540 (see Fig. 3-38).

  In each case, the last two-digit portion of the part number on the replacement IC should be the same as, or higher than, that on the removed IC. Again, ensure that pin 1 is oriented correctly (see Fig. 3-39).
- ☐ Step 3: Return the A16 Display Controller board to its original location in the card cage.

Upgrading the A17 Main Processor board firmware—requires the following steps:

- ☐ Step 1: Remove the A17 Main Processor board. The A17 Main Processor board is the fourth board from the outside edge of the card cage.
- ☐ Step 2: On the A17 Main Processor board, replace U240 and U250 (see Fig. 3-37.) The last two-digit portion of the part number on the replacement IC should be the same as, or higher than, that on the removed IC. Again, ensure that pin 1 is oriented correctly when inserting the new parts (see Fig. 3-39).

Upgrading the A18 BB Memory board firmware—requires the following steps:

- ☐ Step 1: Remove the A18 BB Memory board from the card cage. The A18 BB Memory board is the fifth board from the outside edge of the card cage.
- ☐ Step 2: On the A18 BB Memory board, replace the following ICs (see Fig. 3-37).

U800	U820	U900	U920
U810	U830	U912	U930

ManualsPlus.com

In each case, the last two-digit portion of the part number on the replacement IC should be the same as, or higher than, that on the removed IC. Again, ensure that pin 1 is oriented correctly (see Fig. 3-39).

☐ Step 3: Return the A18 BB Memory board to its original location in the card cage.

Upgrading the A19 Digitizer CPU board firmware—requires the following steps:

☐ Step 1: Remove the A19 Digitizer CPU board from the card cage. The A19 Digitizer CPU board is in the board nearest the outside edge of the card cage.

☐ Step 2: On the A19 Digitizer CPU board, replace the following ICs:

U410	U510
U420	U520
U460	U560

For each IC, the last two-digit portion of the part number on the replacement IC should be the same as, or higher than, that on the removed IC. Again, ensure that pin 1 is oriented correctly.

☐ Step 3: Return the A19 Digitizer CPU board to its original location in the card cage.

Replacing the card cage and circuit board retainers—requires the following steps:

☐ Step 1: Replace the two card cage retainers using the screws removed earlier.

☐ Step 2: Reconnect all cables to their respective connectors.

Setting and verifying the DSA unit identification number—can be performed using the following procedure.

The DSA unit identification number can be set to match the DSA serial number or to any number you choose. To change the current identification number, perform the following steps:

☐ Step 1: Locate CAL jumper J200, on the A19 Digitizer CPU board (see Fig. 3-30 for the jumper location). Install a black plastic short-circuit jumper on the J200 jumper pins.

☐ Step 2: Connect the DSA to a suitable power source.

☐ Step 3: Connect a terminal or controller to the DSA RS-232-C port at the rear of the DSA. Refer to the *DSA 601 and DSA 602 Programmer Reference* manual.

☐ Step 4: Set the PRINCIPAL POWER SWITCH to ON and the ON/STANDBY SWITCH to ON.

ManualsPlus.com

☐ Step 5: Set the necessary communication parameters between the terminal or controller and the DSA (for example, baud rate). You can set the DSA parameters in the **RS-232-C Parameters** pop-up menu. Press the UTILITY button, touch **Page to Utility 2** and then **RS232C Parameters** to access this pop-up menu.

☐ Step 6: Enter the following commands to establish communication from the terminal or controller:

e <CR>
v <CR>

where (<CR> is the return or enter key)

☐ Step 7: Next, enter the command:

Uid main: "BXXXXXX" <CR>

where XXXXXX is the new DSA identification number.

☐ Step 8: Verify that the proper identification number is now displayed in the **Instrument Config** pop-up menu.

Removing the procedure setup—requires the following steps:

☐ Step 1: Set the PRINCIPAL POWER SWITCH to OFF.

☐ Step 2: Remove the short-circuit jumper from jumper J200 on the A19 Digitizer CPU board.

☐ Step 3: Replace the top cover of the DSA.

Cables and Connectors

Figure 4-2 shows the interconnecting cables between the various boards, modules, and assemblies. Use this diagram as a reference when you are removing or replacing cables between these units.

Interconnecting Pins

Two methods of interconnecting are used to electrically connect boards with other boards and components. When the interconnection is made with a coaxial cable, a special end-lead connector plugs into a socket on the board. Other interconnections are made with a pin soldered into the board.

These interconnecting pins use two types of connectors. If the connector is mounted on a plug-on board, a special socket is soldered into the board. If the connector is on the end of a lead, an end-lead pin connector is used which mates with the interconnecting pin. The following information provides the removal and replacement procedure for the various types of interconnecting methods.

Coaxial-type End Lead Connectors (Peltolas & SMB)—use color coding of wires, which may be helpful when connecting a Peltola connector to its socket on a board. The wire insulation's color, or its colored stripe, is the same as the color

ManualsPlus.com

represented by the last digit of the JXX component number. (EXAMPLE: a green wire would connect to a J05 socket.) Other Peltola connectors may have labels which designate their JXX component number.

Multi-Pin Connectors—are arranged so that the pin connectors, connecting the wires to the interconnecting pins, are clamped to the ends of the associated leads (see Fig. 3-42).

Some of the pin connectors are grouped together and mounted in a plastic holder; these connectors are installed and removed as a multi-pin connector.

Pin 1 on multi-pin connectors is designated with a triangle (or arrowhead). A triangle, dot, or square printed on boards denotes pin 1. When a connection is made to a board, the position or orientation of the triangle on the multi-pin holder is determined by the index (triangle, dot or square) printed on the board. Most board-mounted connectors have a square pad for pin 1.

Note: *Some multi-pin connectors are keyed by a gap between the pin 1 and 3 positions in the holder. (A small plastic plug covers the pin 2 position on the end of the holder.) There is a corresponding gap between pins 1 and 3 on the board.*

Align the plug in the multi-pin connector with the gap between the connector pins. The connector is then ready to be installed.

Many of the larger, multi-pin, ribbon connectors have a red, blue, or other contrasting color line along one side of their attached wire cables. This line indicates the location of pins 1 and 2 and also the location of the corresponding triangle index mark on the connector.

Some of the gray-colored ribbon cables may have the number of connectors stamped directly on the cable.

The ribbon connectors have the following two functions:

- to provide a strain release for the wire connections. The wire ribbon is wrapped around a bar in between the wire connections and the top of the connector. Strain is then present between the wires and the top of the connector. This releases most of the strain which would otherwise be present on the wire connections.
- to provide a pull-tab to ease disconnection. The pull-tab is attached inside the connector. When the tab is pulled, even pressure is applied across the connector. The connector then separates easily from its holder.

Note: *To remove these ribbon connectors, grasp the pull-tab (fastened into the connector) and pull it loose from the holder.*

If there is not a pull-tab present on the connector, grasp the ends of the connector instead. Pull the connector straight out from the connector socket.

ManualsPlus.com

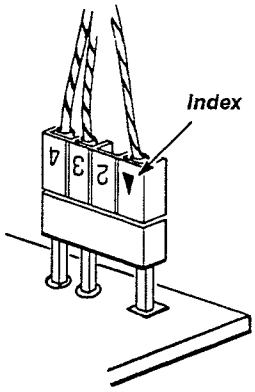

Figure 3-42 — Multi-Pin Connector Orientation

Checks After FRU Replacement

After any FRU has been replaced, that particular FRU should be checked. Table 3-6 lists the required checks (and the respective part containing this check) to perform.

Table 3-6 — Checks Required After FRU Replacement

FRU Replaced	Checks Required
Cathode Ray Tube (CRT)	Part 4 — Display
Power Supply Module	Part 1 — Power-On Diagnostics Part 2 — Extended Diagnostics Part 3 — Power Supply
A1 Plug-in Interface board	Part 1 — Power-On Diagnostics Part 2 — Extended Diagnostics Part 10 — Enhanced Accuracy Part 11 — Probe Calibration
A4 Regulator board	Part 1 — Power-On Diagnostics Part 2 — Extended Diagnostics Part 10 — Enhanced Accuracy Part 11 — Probe Calibration
A5 Calibrator board	Part 1 through Part 21
A6 Lower Acquisition board	Part 1 through Part 21
A7 Upper Acquisition board	Part 1 through Part 21
A8 Waveform Processor (Signal Processor) board	Part 1 — Power-On Diagnostics Part 2 — Extended Diagnostics Part 10 — Enhanced Accuracy Part 11 — Probe Calibration
A9 Touch Panel assembly	Part 1 — Power-On Diagnostics Part 2 — Extended Diagnostics Part 10 — Enhanced Accuracy Part 11 — Probe Calibration

ManualsPlus.com

Table 3-6 — Checks Required After FRU Replacement (Cont.)

FRU Replaced	Checks Required
A10 Front Panel Control board	Part 1 — Power-On Diagnostics Part 2 — Extended Diagnostics Part 10 — Enhanced Accuracy Part 11 — Probe Calibration
A11 Front Panel Button board	Part 1 — Power-On Diagnostics Part 2 — Extended Diagnostics Part 10 — Enhanced Accuracy Part 11 — Probe Calibration
A12 Rear Panel board	Part 1 — Power-On Diagnostics Part 2 — Extended Diagnostics Part 10 — Enhanced Accuracy Part 11 — Probe Calibration
A13 Mother board	Part 1 — Power-On Diagnostics Part 2 — Extended Diagnostics Part 10 — Enhanced Accuracy Part 11 — Probe Calibration
A14 I/O board	Part 1 — Power-On Diagnostics Part 2 — Extended Diagnostics Part 7 — Input/Output Part 10 — Enhanced Accuracy Part 11 — Probe Calibration
A15 MMU board	Part 1 — Power-On Diagnostics Part 2 — Extended Diagnostics Part 10 — Enhanced Accuracy Part 11 — Probe Calibration
A16 Display Controller board	Part 1 — Power-On Diagnostics Part 2 — Extended Diagnostics Part 10 — Enhanced Accuracy Part 11 — Probe Calibration
A17 Main Processor board	Part 1 — Power-On Diagnostics Part 2 — Extended Diagnostics Part 10 — Enhanced Accuracy Part 11 — Probe Calibration
A18 BB Memory board	Part 1 — Power-On Diagnostics Part 2 — Extended Diagnostics Part 10 — Enhanced Accuracy Part 11 — Probe Calibration
A19 Digitizer CPU board	Part 1 through Part 21
A20 Digitizer I/O board	Part 1 — Power-On Diagnostics Part 2 — Extended Diagnostics Part 10 — Enhanced Accuracy Part 11 — Probe Calibration

ManualsPlus.com

Table 3-6 — Checks Required After FRU Replacement (Cont.)

FRU Replaced	Checks Required
A21 Mini-Mother boards	Part 1 — Power-On Diagnostics Part 2 — Extended Diagnostics Part 10 — Enhanced Accuracy Part 11 — Probe Calibration
A24 CRT Driver board	Part 1 — Power-On Diagnostics Part 2 — Extended Diagnostics Part 4 — Display Part 10 — Enhanced Accuracy Part 11 — Probe Calibration
A25 Degauss board	Part 1 — Power-On Diagnostics Part 2 — Extended Diagnostics Part 10 — Enhanced Accuracy Part 11 — Probe Calibration
A 26 Geometry board	Part 1 — Power-On Diagnostics Part 2 — Extended Diagnostics Part 4 — Display Part 10 — Enhanced Accuracy Part 11 — Probe Calibration
A27 CRT Socket board	Part 1 — Power-On Diagnostics Part 2 — Extended Diagnostics Part 4 — Display Part 10 — Enhanced Accuracy Part 11 — Probe Calibration
Firmware ICs	Part 1 — Power-On Diagnostics Part 2 — Extended Diagnostics
Clock Driver, Demux, Sample/Hold and Flash, Sweep Controller, Time Interpolator, Trigger, and Utility ICs	Part 1 through Part 21
SDI IC	Part 1 — Power-On Diagnostics Part 2 — Extended Diagnostics Part 10 — Enhanced Accuracy Part 11 — Probe Calibration

ManualsPlus.com

Diagnostic Troubleshooting

This section provides the information necessary to troubleshoot a faulty DSA to the Field Replaceable Unit (FRU) level. In most cases a FRU is a circuit board. Two FRUs are an exception; the Cathode Ray Tube (CRT)/CRT Driver board and the Power Supply Module. The primary means for troubleshooting is to use the error index code output from the Kernel Diagnostics or Self-Test and cross-reference them to the suspected circuit boards in the FRU Guide tables below. After the faulty FRU is replaced, some recalibration of the DSA is normally required (this is discussed further below). In addition, conventional troubleshooting techniques are described at the end of this section to help identify a faulty Power Supply module, A4 Regulator board, CRT, A24 CRT Driver board, A27 CRT Socket board, and A26 Geometry board, A13 Mother board, or fuses.

Diagnostics Overview

Each subsystem processor (Executive, Display, and Digitizer) executes a set of Kernel diagnostics prior to the Self-Test diagnostics. After the Display and Digitizer processors verify their support circuitry, these processors attempt to establish communication with the Executive processor. If this link is successful, then the Self-Test diagnostics execute to verify the functionality of each of the subsystems. After all the Self-Test Diagnostics are executed, any failures cause the DSA to enter Extended Diagnostics and to display the error index codes in the **EXTENDED DIAGNOSTICS** menu structure. Extended Diagnostics tests are a superset of the Self-Test diagnostics.

The Kernel diagnostics (low-level Self-Test diagnostics) and Self-Test/Extended Diagnostics produce and format error index codes differently, so these two sets of diagnostics are covered separately.

Note that some of these tests that may indicate faulty FRU(s) are not executed automatically during the Self-Test diagnostics (that is, some errors codes are only generated by manually selecting tests or Extended Diagnostics). Also, some FRU faults may be discovered only when you are performing Enhanced Accuracy or Probe Compensation.

The following flowchart provides an overview of Kernel, Self-Test, and Extended Diagnostics.

Notes:

1. *If the Executive Processor has a kernel failure, no other processors can enter Self-Test diagnostics.*
2. *If the Display Processor does not successfully communicate with the executive Processor, the Digitizer or plug-in units can not enter Self-Test.*
3. *If the Digitizer Processor does not successfully communicate with the Executive Processor, the plug-in unit(s) cannot enter Self-Test diagnostics.*
4. *Normal Operation cannot be entered from Extended Diagnostics unless both the Display and Digitizer Processors have successfully communicated with the Executive Processor.*

ManualsPlus.com

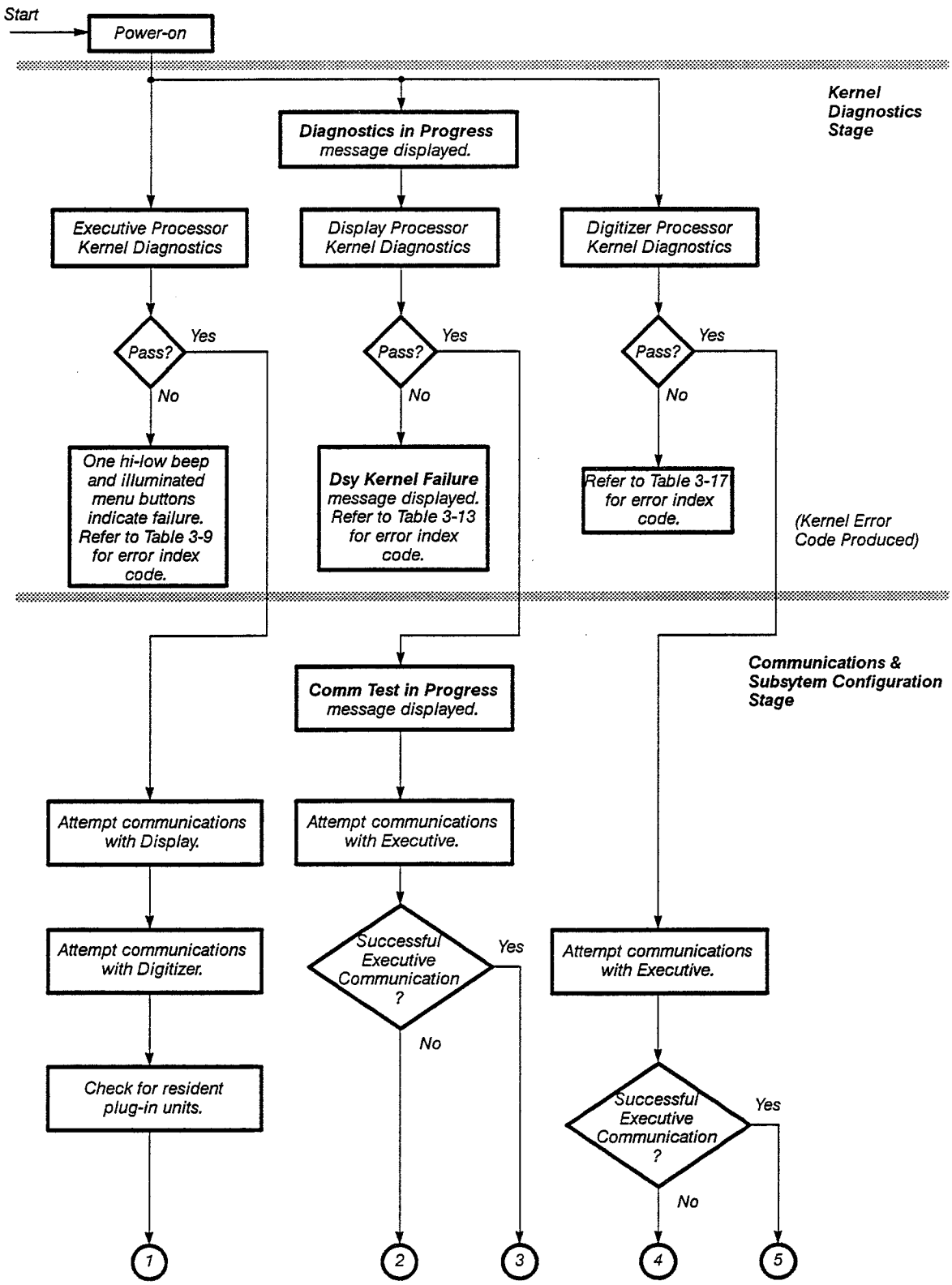

Figure 3-43 — *Diagnostics Flowchart*

ManualsPlus.com

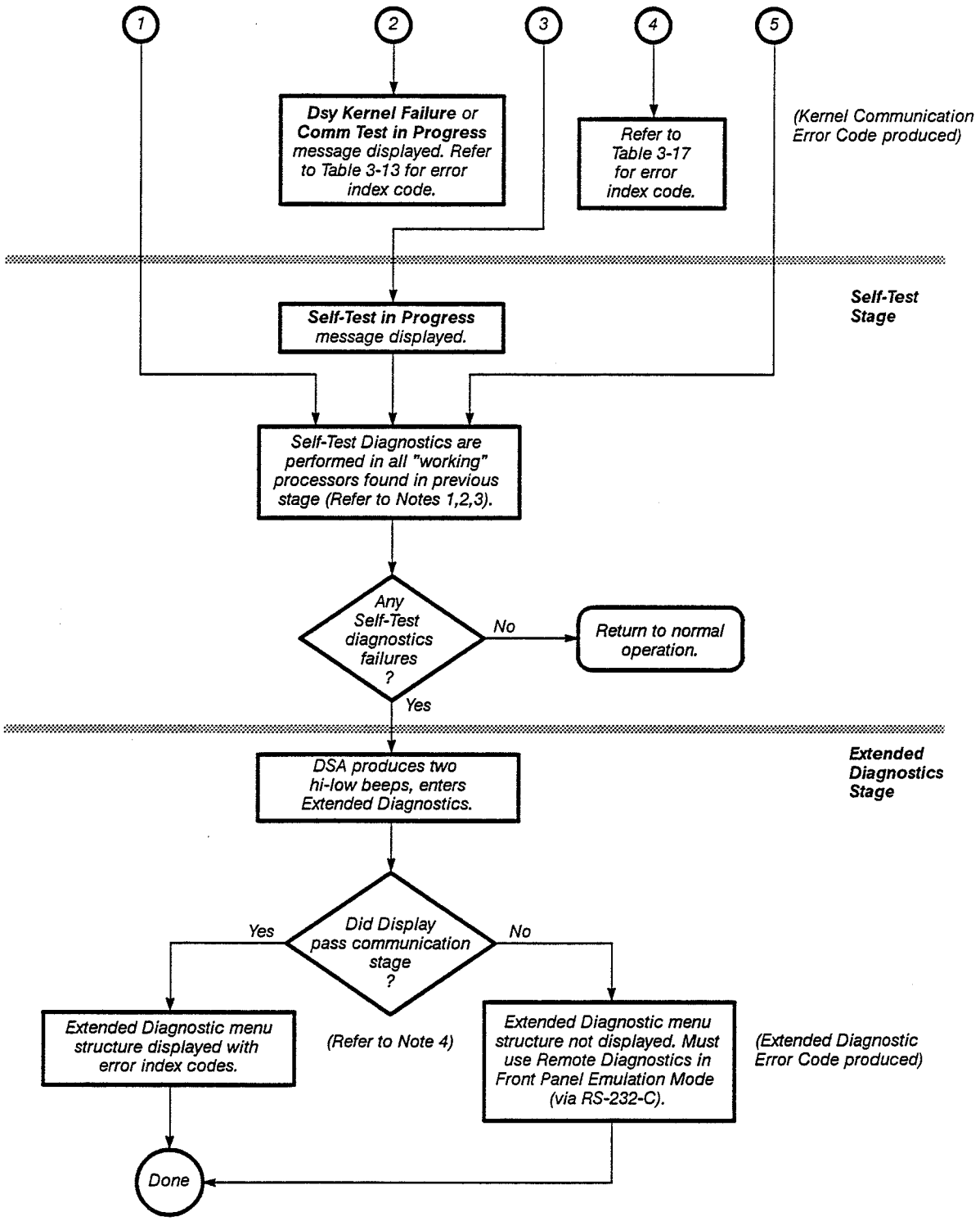

Figure 3-43 — *Diagnostics Flowchart (Cont.)*

ManualsPlus.com

Extended Diagnostics Menu Structure

The format of the error index codes is based on the Extended Diagnostics menu structure. The **EXTENDED DIAGNOSTICS** menu structure is in a three level hierarchy with the **Block** pop-up menu at the highest level. Each circuit block name in the **Block** pop-up menu is individually selectable and testable. A selected circuit block is divided into a number of parts or circuit areas in the **Area** pop-up menu, the second level. Touching **Area** in the **EXTENDED DIAGNOSTIC** menu structure, displays the **Area** pop-up menu for the selected block. Each circuit area has a **Routine** pop-up menu, the third level, as well; which has one or more selectable routines. Routines are the smallest test units that are selectable and executable. These **Block**, **Area**, and **Routine** pop-up menus generate the error index codes.

Extended Diagnostics error index codes are five-character codes. The first character indicates the subsystem tested. The last four digits are hexadecimal (hex) numbers that indicate the **Block**, **Area**, **Routine**, and the failure identity. For example, E2321 is decoded as follows:

E Subsystem—Executive

2 Block name—Front Panel

3 Area name—Soft Keys

2 Routine name—Column Open

1 Failure Identity—specific failure mode

The subsystem character of an error index code is one of the following:

E Executive

D Display

G Digitizer

L Left Amplifier

C Center Amplifier

R Right Amplifier

Front panel controls are active during the Self-Test diagnostics sequence, and any disturbance may cause a test failure. If a failure occurs, then the DSA automatically enters the Extended Diagnostics state and displays the **EXTENDED DIAGNOSTICS** menu structure. Touching **Exit** removes the menu, and resumes normal operation. However, if the diagnostics detect a fatal fault in the Digitizer processor Kernel diagnostics fault, then exiting the menu to normal operation is not possible.

Self-Test diagnostics verify the following circuits:

- Executive Control
- Front Panel
- Internal I/O
- External I/O

ManualsPlus.com

- Subsystem Communication
- Options
- Display Control
- Video Generator
- Digitizer Control/Calibration
- Signal Processor
- Acquisition
- Left Amplifier
- Center Amplifier
- Right Amplifier

Using the Self-Test/Extended Diagnostics—After all Self-Test/Extended Diagnostic have executed, any resultant error index codes appear on the display next to the associated circuit block names in the **EXTENDED DIAGNOSTICS** menu structure. Each circuit block that experienced a failure, reports the first error encountered and the number of failures in the block. To obtain a more complete list of the error index codes in a block, select the label of a failed block, then select **Area**. If you select **Routine**, the lowest level test routines in the selected **Area** are displayed. The currently selected **Block**, **Area**, and **Routine** are displayed below their labels at the bottom of the screen. Several operating mode selectors are also available at the bottom of the screen. When certain test routines are selected, some of these operating modes are unselectable. The mode operators are as follows:

- **Exit**—Extended Diagnostics is terminated and the DSA enters the normal operating mode.
- **Loop**—Toggles **On** and **Off**. When **On**, the selected test(s) is executed continuously with the number of iterations displayed.
- **Terse**—Toggles **On** and **Off**. When **On**, tests in the loop mode execute at the fastest rate, but the iteration readout is not updated until the test is stopped. To manually stop the test, touch the screen or a button.
- **All**—Toggles **On** and **Off**. When **On**, all tests in the current menu are selected to execute when started.
- **Stop on Err**—Toggles **On** and **Off**. When **On**, testing stops after the first failed test completes.
- **Run/Quit**—Starts or stops the currently selected tests.

Note: *Touching any place on the screen (or any front panel button) while a test is executing will stop the test when the current routine is completed.*

ManualsPlus.com

Battery Testing—The DSA 601 and DSA 602 each contain two (three with Option 4C) lithium batteries to provide power when the ON/STANDBY switch is set to OFF. Battery BT130 powers the real time clock on the A14 I/O board. Battery BT160 provides power to the nonvolatile RAM (NV RAM) on the A17 Main Processor board. (Battery BT150 provides power to the optional NV RAM on the A18 BB Memory board.)

The real time clock, typically has an operating life of five years. If the clock begins to lose time rapidly when the DSA is turned off or the diagnostics report that the real time clock has failed, the most likely source of the problem is the battery. If the battery drops below 2.7 V (at 20°C), then follow the instructions for replacement under Battery Disposal and First Aid, earlier in this section.

Batteries BT150 and BT160 for the NV RAM, also typically have an operational life of five years. If the diagnostics consistently report a problem with the battery for the NV RAM, then the battery should be tested. If the battery measures less than 2.45 V (at 20°C), then follow the instructions for replacement, under Battery Disposal and First Aid, earlier in this section.

Note: *If the diagnostics report an NV RAM battery failure, then exit the diagnostics. This will rewrite the confidence words into the NV RAM. Turn the DSA OFF for at least one hour. Now, switch the PRINCIPAL POWER SWITCH ON. If the diagnostics still indicate an NV RAM battery failure, then the battery should be tested.*

Turning the PRINCIPAL POWER SWITCH OFF while the Extended Diagnostics is executing the NV RAM Memory Test usually causes a single failure of the NV RAM battery test.

Field Replaceable Unit (FRU) Guide—This section correlates error index codes resulting from diagnostic tests with the hybrid/integrated circuit (IC) and the board FRU(s) suspected of causing each error. The FRU(s) in the board FRU category are listed in most-to-least probable cause order (assuming only one error is indicated). If any diagnostic errors occur, inspect the suspect FRU for loose connections and components, and repeat the diagnostic test. If any diagnostic error is repeated, then replace the suspect FRU(s) with a known good FRU or FRUs. Ensure that the new FRU is configured exactly the same as the original FRU, and that any installed firmware matches the version in the original FRU. In addition, refer to Table 3-6, Checks Required After FRU Replacement earlier in this section, for any necessary adjustments and precautions.

The error index codes and tests are divided into three groups based on the three main subsystems: Executive, Display, and Digitizer. The prefix letters on the error index codes, E, D, G refer to these processors, respectively. The error index codes for the Left, Center, and Right plug-in compartments are reported by the DSA. They are denoted with L, C, and R respectively. Each subsystem group has a table of Kernel diagnostic error index codes, a table of Self-Test/Extended Diagnostic error index codes. The Executive processor and Display processor also have a table of manual test error index codes..

Kernel error index codes for the Digitizer and Display are read as TTL logic levels on board pins, using a logic probe. Refer to Table 2-2, Test Equipment, for a complete description of the logic probe recommended.

ManualsPlus.com

Abbreviations of FRU Names—Table 3-7 lists FRU boards/assemblies and their abbreviation and number.

Table 3-7 — Board FRUs/Assemblies

FRU	Board/Assembly	Board No.
CRT	Cathode Ray Tube	
PIINT	Plug-in Interface board	(A1)
REG	Regulator board	(A4)
CAL	Calibrator board	(A5)
LOWACQ	Lower Acquisition board	(A6)
UPACQ	Upper Acquisition board	(A7)
WAVPROC	Waveform Processor board	(A8)
SIGPROC[1]	Signal Processor board	(A8)
TOUCH	Touch Panel board	(A9)
FPCTRL	Front Panel Control board	(A10)
FPBUT	Front Panel Button board	(A11)
REAR	Rear Panel board	(A12)
MOTHER	Mother board	(A13)
IO	Input/Output board	(A14)
MMU	Memory Management Unit board	(A15)
DSY	Display Controller board	(A16)
MPU	Main Processor board	(A17)
MEM	Memory board	(A18)
DIGCPU	Digitizer CPU board	(A19)
DIGIO	Digitizer I/O board	(A20)
MINMOTH	Mini Mother board	(A21)
CRTDR	CRT Driver board	(A24)
DGAUSS	Degauss board	(A25)
GEOM	Geometry board	(A26)
CRTSKT	CRT Socket board	(A27)
LMAIN	Left Plug-in	
CMAIN	Center Plug-in	
RMAIN	Right Plug-in	

[1]*The A8 Signal Processor board replaces the A8 Waveform Processor board if your DSA is equipped with Option 3C.*

ManualsPlus.com

Abbreviations of Component and Module Names—Table 3-8 lists the FRU components and modules and their abbreviation.

Table 3-8 — FRU Components and Modules

FRU	Component/Module
FW	Executive Processor Firmware
FW	Display Processor Firmware
FW	Digitizer Processor Firmware
CALPROC	Calibrator Processor and Firmware IC
SDI	Serial Data Interface IC
DMUX	Demux IC
UTLY	Utility IC
TRIG	Trigger IC
SWP	Sweep Controller IC
CLKDR	Clock Driver IC
SHF	S/H and Flash IC
TIME	Time Interpolator IC
PS	Power Supply Module

The Executive, Display, and Digitizer processor firmware are not separate components. These three components are packaged in a firmware (FW) kit (refer to Firmware ICs earlier in this section).

ManualsPlus.com

Executive Subsystem Error Index Codes—Table 3-9 lists the Executive processor Kernel error index codes and their suspect faulty FRU(s).

Table 3-9 *—Executive Processor Kernel Error Index Codes*

Error Index*hex*	Hybrid/IC FRUs	Suspect Board FRUs
1F – 1C		MEM, MPU
1B – 18	FW	MPU
17 – 14	FW	MEM, MPU
13 – 11		IO, MPU
10		MPU
0F		MPU, MEM
0E		FPCTRL, IO, MPU
0D		IO, MPU
0C		IO, MPU
0B – 09		REAR, IO, MPU
08 – 06		MMU, MPU
05 – 04		MPU, MEM
03		REAR, IO, MPU

Bit patterns for the above hexadecimal error index codes are displayed with the front panel MENUS LEDs in bottom-to-top bit order. That is, the UTILITY label represents the MSB (most significant bit) and the WAVEFORM label represents the LSB (least significant bit). When lit, the LEDs represent a one.

For example: Error index code 12*hex* causes the UTILITY and TRIGGER LEDs to light.

Reading the Executive processor subsystem error bits from the A17 Main Processor Board test points TP201 (MSB) to TP205 (LSB) is also possible (See Fig. 3-44 for the location of these status pins). The bits are high (+5 V) true.

ManualsPlus.com

The Status LEDs (DS306 and DS307) will flash while the Kernel Diagnostic tests are executing. If a kernel failure is detected, then one or both LEDs will remain on. Table 3-10 lists the various LED configurations and the status they indicate.

Table 3-10 —Executive Processor Status LED Configuration

DS307	DS306	Status
ON	ON	Power-On
ON	OFF	Kernel Tests Executing
OFF	ON	Kernel Tests Failed
OFF	OFF	Kernel Tests Finished

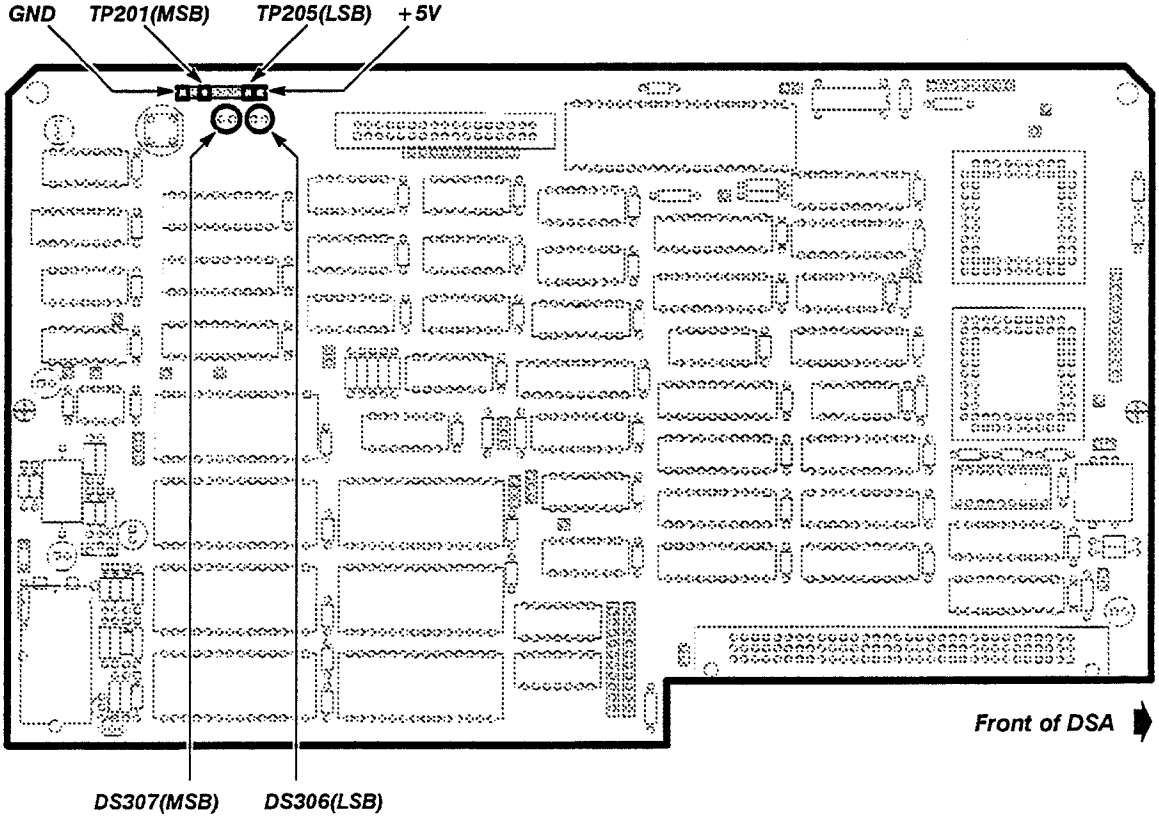

Figure 3-44 — A17 Main Processor Board Status Pins

ManualsPlus.com

Table 3-11 lists the Executive processor Self-Test/Extended Diagnostics error index codes and their suspect faulty FRU(s).

***Table 3-11** — Executive Processor Self-Test/Extended Diagnostics Error Index Codes*

Description	Error Index	Suspect Hybrid/ IC FRUs	Suspect Board FRUs
ROM Location	E111X – E112X	FW	MPU
ROM Location	E113X – E11AX	FW	MEM, MPU
ROM Checksum	E121X – E122X	FW	MPU
ROM Checksum	E123X – E12AX	FW	MEM, MPU
System RAM	E13XX		MEM, MPU
NV RAM	E14XX		MPU
Interrupt Control	E15XX		MPU
Timers	E16XX		IO, MPU
Timer Interrupts	E17XX		IO, MPU
MPU Waits	E18XX		MPU, IO
ROM Waits	E19XX		MEM, IO, MPU
Math Co-processor	E1AXX		MPU
DMAs	E1BXX		MPU, MEM
Control	E21XX		FPCTRL, IO, MPU
Hard Keys	E22XX		FPBUT, TOUCH, FPCTRL, IO, MPU
Soft Keys	E23XX		TOUCH, FPCTRL, IO, MPU
Knobs	E24XX		IO, FPCTRL, MPU
Temp Sensor	E31XX		IO, MPU
Real Time Clock	E32XX		IO, MPU
Printer	E41XX		REAR, IO, MPU
RS232	E42XX		REAR, IO, MPU
GPIB	E43XX		REAR, IO, MPU
MMU Control	E51XX		MMU, MPU
Waveform RAM	E52XX		MMU, MPU
Display Comm	E531X		DSY, MMU
Digitizer Comm	E532X		DIGCPU, DIGIO, MMU, MPU
SDI	E54XX	SDI	IO, MPU

ManualsPlus.com

Table 3-11 *— Executive Processor Self-Test/Extended Diagnostics Error Index Codes*

Description	Error Index	Suspect Hybrid/ IC FRUs	Suspect Board FRUs
Left Plug-in Comm	E551X		LMAIN, IO, PIINT, MPU
Center Plug-in Comm	E552X		CMAIN, IO, PIINT, MPU
Right Plug-in Comm	E553X		RMAIN, IO, PIINT, MPU
WFM NVRAM	E6XX		MEM, MPU

Table 3-12 lists the Executive processor manual tests, the verification procedures, and the suspect board FRUs. If the conditions specified in the verification procedure listed are not met, then the listed board FRUs are suspect.

These tests are performed manually and produce no error index code displays. These tests are included to help you locate faulty boards that possibly the Kernel diagnostics or Self-Test diagnostics did not locate. Interconnections such as the A13 Mother board, cable, and the Power Supply module interconnections are not listed; but are considered as possible problem sources.

Table 3-12 *— Executive Processor Manual Tests*

Test	Verification Procedure	Verification Procedure Failure: Suspect Board FRUs
Front Panel		
Verify		
Hard Keys	This test allows you to interactively press the hard keys to verify their operation. This test verifies the operation of a key with both visual and audio feedback. This test requires you to interact, and is only executable in the **Routine** pop-up menu with the **All** and **Loop** modes set to **Off**. Once this test is invoked, you can press any of the hard keys in the DSA and verify that the corresponding image of the key on the screen is highlighted, that the associated LED is turned on, and that an audio click is generated.	FPBUT, TOUCH, FPCTRL, IO, MPU

ManualsPlus.com

Table 3-12 *— Executive Processor Manual Tests*

Test	Verification Procedure	Verification Procedure Failure: Suspect Board FRUs
Front Panel (cont)		
Verify (cont)		
Soft Keys	This test allows you to interactively touch any of the soft keys and verify their operation. This test verifies the operation of a key with both visual and audio feedback. This test requires you to interact, and is only executable in the **Routine** pop-up menu with the **All** and **Loop** modes set to **Off**. Once this test is invoked, you can touch any of the soft keys in the DSA and verify that a touch box is drawn around the soft key on the screen and that an audio click is generated.	TOUCH, FPCTRL, IO, MPU
Knobs	This test allows you to interactively either of the knobs and verify their operation. This test verifies knob movement with visual feedback. This test requires you to interact, and is only executable in the **Routine** pop-up menu with the **All** and **Loop** modes set to **Off**. Once this test is invoked, you can turn either of the knobs on the DSA and verify that the corresponding knob pointer on the screen rotates and that its associated counter value changes.	IO, FPCTRL, MPU

ManualsPlus.com

Table 3-12 *— Executive Processor Manual Tests (Cont.)*

Test	Verification Procedure	Verification Procedure Failure: Suspect Board FRUs
Internal I/O		
Tone Gen		
Ramp Tone	This test verifies the capability of the DSA to generate tones through its internal speaker. This test requires you to interact, and is only executable in the **Routine** pop-up menu with the **Loop** mode set to **On** and **All** mode set to **Off**. After invoking this test, you should verify that a high speed clicking sound occurs.	IO, FPCTRL, MPU
Real Time Clk		
Calibrate	This test allows you to check and adjust the real time clock period. This test requires you to interact, and is only executable in the **Routine** pop-up menu with the **All** and **Loop** modes set to **Off**. Once this test is invoked, you can examine/adjust the Real Time Clock period following the procedure outlined in the Section 2, Checks and Adjustments.	IO, MPU

ManualsPlus.com

Table 3-12 *— Executive Processor Manual Tests (Cont.)*

Test	Verification Procedure	Verification Procedure Failure: Suspect Board FRUs
External I/O		
Printer		
Pattern	This test prints a set of patterns (all printable ASCII characters) to help you verify the external printer interface. This test requires you to interact, and is only executable in the **Routine** pop-up menu with the **All** mode set to **Off**. Before executing this test, the operator should connect a Centronics-compatible printer to the printer connector on the rear panel of the DSA.	REAR, IO, MPU
RS-232		
Extern Loop	This test verifies parts of the external RS-232-C interface. This test requires you to interact, and is only executable in the **Routine** pop-up menu with the **All** mode set to **Off**. Before executing this test, the operator should connect an external loopback connector to the RS-232-C connector on the rear panel of the DSA.	REAR, IO, MPU
GPIB		
Intrpt Reset Reset Status Data Lines Interrupt	These tests verify the Executive processor interface to the internal GPIB circuitry. The major external GPIB functions are not tested. This test requires you to interact, and is only executable in the **Routine** pop-up menu with the **All** mode set to **Off**. Before executing this test, the operator should disconnect the DSA from the GPIB bus.	REAR, IO, MPU

ManualsPlus.com

Display Subsystem Error Index Codes—Table 3-13 lists the Display processor Kernel error index codes and their suspect faulty FRU(s).

Table 3-13 — Display Processor Kernel Error Index Codes

Error Index	Suspect Hybrid/ IC FRUs	Suspect Board FRUs
7		DSY
1–4	FW	DSY
5		DSY
6		DSY

The name of the first Display Kernel test that fails is displayed on the screen. The Display processor error index code are read from the A16 Display Controller board test points TP100(MSB) to TP102(LSB) (see Figure 3-45 for the location of these status pins). The test points are high (+5 V) true.

The status LEDs (DS100 and DS200) will flash while the Kernel diagnostic tests are executing. If a Kernel failure is detected, then one or both LEDs will remain on. Table 3-14 lists the various LED configurations and the status they indicate.

Table 3-14 — Display Processor Status LED Configuration

DS100	DS200	Status
ON	ON	Power-On
OFF	ON	Kernel Tests Executing
ON	OFF	Kernel Tests Failed
OFF	OFF	Kernel Tests Finished

ManualsPlus.com

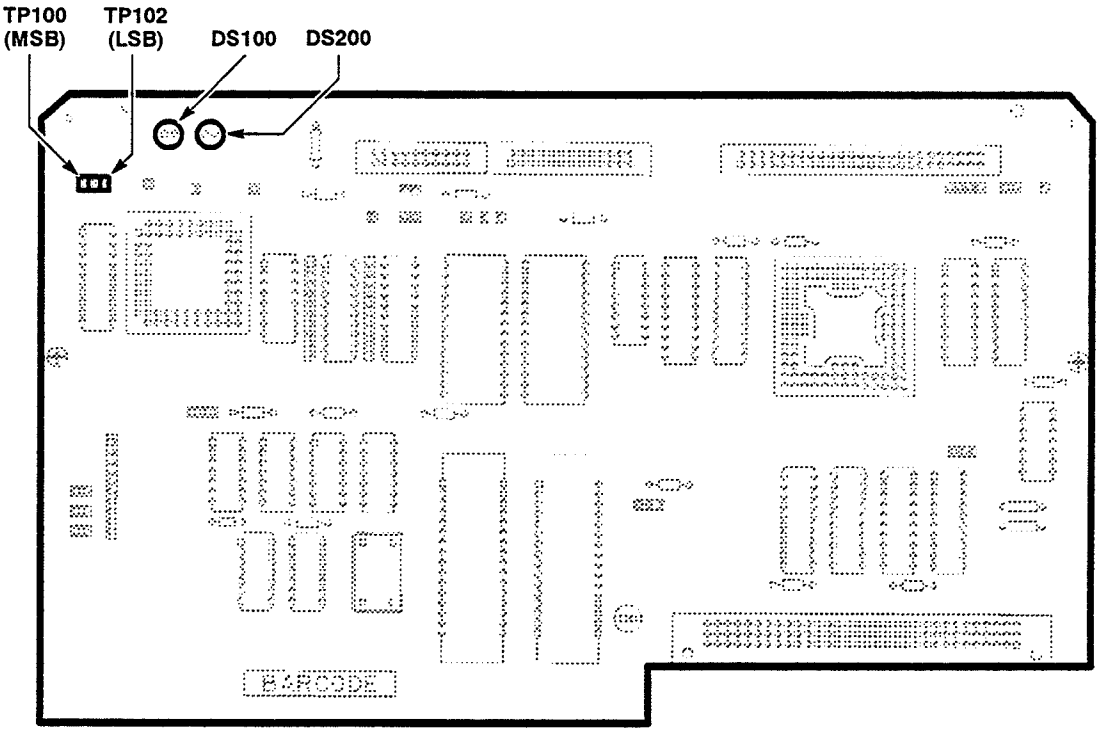

Figure 3-45 — A16 Display Controller Board Status Pins

Table 3-15 lists the Display processor Self-Test/Extended Diagnostics error index codes and their suspect faulty FRU(s).

Table 3-15 — Display Processor Self-Test/Extended Diagnostics Error Index Codes

Area	Error Index	Suspect Hybrid/ IC FRUs	Suspect Board FRUs
ROM Location	D11XX	FW	DSY
ROM Checksum	D12XX	FW	DSY
Static RAM	D13XX		DSY
Timer	D14XX		DSY
DMAs	D15XX		DSY
Exec Intrfce	D16XX		DSY, MMU, MPU
Wfm Compress	D17XX		DSY
Timing	D21XX		DSY
Address Mux	D22XX		DSY
Display Mem	D23XX		DSY

ManualsPlus.com

Table 3-15 — Display Processor Self-Test/Extended Diagnostics Error Index Codes (cont)

Area	Error Index	Suspect Hybrid/ IC FRUs	Suspect Board FRUs
Pixel Check	D24XX		DSY
Wfm Display	D25XX		DSY
BPALU	D26XX		DSY

Table 3-16 lists the Display processor manual test, the verification procedure, and the suspect board FRUs. If the condition specified in the listed verification procedure is not met, then the listed board FRUs listed are suspect.

These tests are performed manually and produce no error index code displays. They are included to help you locate faulty boards that possibly the Kernel diagnostics or Self-Test diagnostics did not locate. Interconnections, such as A13 Mother board, cables, and the Power Supply module interconnections, are not listed, but are considered possible problem sources.

Table 3-16 — Display Processor Manual Test

Test	Verification Procedure	Verification Procedure Failure: Suspect Board FRUs
Video Gen		
CRT Driver		
Stimulus	This test verifies the capability of the A24 CRT Driver board to change the intensity of the CRT display screen. This test requires you to interact, and is only executable in the **Routine** pop-up menu with the **All** mode set to **Off**. Once this test is invoked, the operator is required to verify that the intensity of the display CRT screen changes through four different intensity levels.	CRTDR, DSY, CRT

ManualsPlus.com

Digitizer Subsystem Error Index Codes

Table 3-17 lists the Digitizer processor Kernel diagnostic error index codes and their suspect faulty FRU(s).

Table 3-17 — Digitizer Processor Kernel Diagnostic Tests Error Index Codes

Error Index	Suspect Hybrid/ IC FRUs	Suspect Board FRUs
1F – 1E		DIGCPU
1D – 12	FW	DIGCPU
11		DIGIO, DIGCPU, MINMOTH
10		CAL, DIGCPU
0F		WAVPROC (SIGPROC), DIGCPU
0E		MMU, MPU, DIGIO, DIGCPU, MINMOTH

The error index code bits of the first Digitizer Kernel test that fails are read from the A19 Digitizer CPU board test connector J500, pins 2 (MSB) to 6 (LSB) (see Fig. 3-46 for the location of these status pins). The pins are high (+5 V) true.

The status LEDs (DS200 and DS205) will flash while the Kernel diagnostics are executing. If a Kernel failure is detected, then one or both LEDs will remain on. Table 3-18 lists the various LED configurations and the status they indicate.

Table 3-18 — Digitizer Processor Status LED Configuration

DS200	DS205	Status
ON	ON	Power–On
ON	OFF	Kernel Tests Executing
OFF	ON	Kernel Tests Failed
OFF	OFF	Kernel Tests Finished

ManualsPlus.com

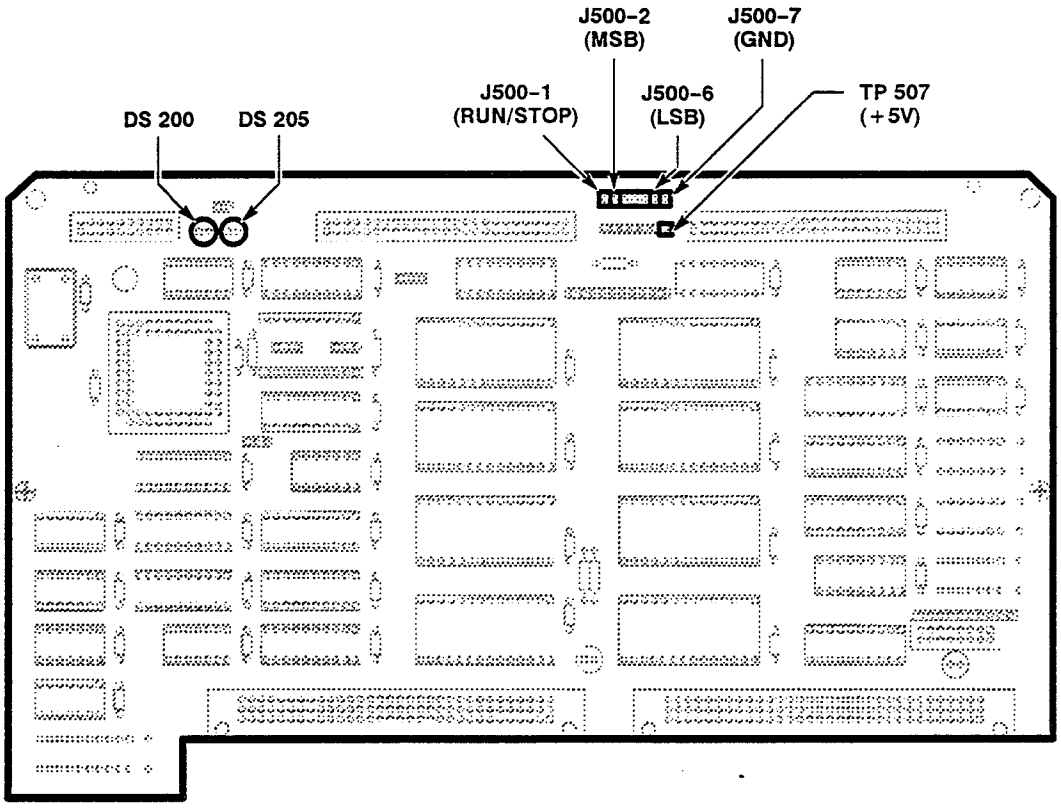

Figure 3-46 — A19 Digitizer CPU Board Status Pins

ManualsPlus.com

Table 3-19 lists the Digitizer Processor Self-Test/Extended Diagnostics error index codes and their suspect faulty FRU(s).

Table 3-19 — Digitizer Processor Self-Test/Extended Diagnostics Error Index Codes

Area	Error Index	Suspect Hybrid/ IC FRUs	Suspect Board FRUs
ROM Location	G11XX	FW	DIGCPU
ROM Checksum	G12XX	FW	DIGCPU
Digitizer RAM	G1311		DIGCPU
Digitizer RAM	G1321		DIGCPU
Digitizer RAM	G1322		WAVPROC (SIGPROC)
Digitizer RAM	G1331		DIGCPU
Cal Board Diag	G1411	CALPROC	CAL, LOWACQ, UPACQ
Cal Board Diag	G1412 - G1442	CALPROC	CAL
Cal Board Diag	G1451		CAL, LOWACQ, UPACQ
Cal Board Diag	G1452 - G1482	CALPROC	CAL
Communication	G1511	CALPROC	CAL, DIGCPU
Tristar Bank Switch	G2111		WAVPROC (SIGPROC)
SH/Flash Reg	G2121		WAVPROC (SIGPROC), UPACQ
Trigger Reg	G2131		WAVPROC (SIGPROC), UPACQ
Ext. RAM Power	G214X		WAVPROC (SIGPROC)
SPM 1-64K	G22XX		WAVPROC (SIGPROC)
SPM 2-64K	G23XX		WAVPROC (SIGPROC)
Program RAM 1	G24XX		WAVPROC
Program RAM 2	G25XX		WAVPROC
Tristar	G26XX		WAVPROC
HSDMA	G27XX		SIGPROC
SL Utility 1	G3111	UTLY (U850)	LOWACQ, WAVPROC (SIGPROC)
SL DMX 1 Master	G3121	DMUX (U1140)	LOWACQ, WAVPROC (SIGPROC)
SL DMX 1 Slave	G3131	DMUX (U1340)	LOWACQ, WAVPROC (SIGPROC)
SL DMX 3 Slave	G3141	DMUX (U1300)	LOWACQ, WAVPROC (SIGPROC)
SL DMX 3 Master	G3151	DMUX (U1100)	LOWACQ, WAVPROC (SIGPROC)
SL Utility 3	G3161	UTLY (U810)	LOWACQ, WAVPROC (SIGPROC)
SL Utility 4	G3171	UTLY (U110)	LOWACQ, WAVPROC (SIGPROC)
SL Utility 2	G3181	UTLY (U150)	LOWACQ, WAVPROC (SIGPROC)

ManualsPlus.com

***Table 3-19** — Digitizer Processor Self-Test/Extended Diagnostics Error Index Codes (Cont.)*

Area	Error Index	Suspect Hybrid/ IC FRUs	Suspect Board FRUs
SL DMX 2 Master	G3191	DMUX (U1000)	UPACQ, WAVPROC (SIGPROC)
SL DMX 2 Slave	G31A1	DMUX (U1400)	UPACQ, WAVPROC (SIGPROC)
SL DMX 4 Slave	G31B1	DMUX (U1450)	UPACQ, WAVPROC (SIGPROC)
SL DMX 4 Master	G31C1	DMUX (U1050)	UPACQ, WAVPROC (SIGPROC)
Sweep	G32XX	SWP	UPACQ, WAVPROC (SIGPROC)
Utility 1 IC	G3311	UTLY (U850)	LOWACQ
Utility 2 IC	G3321	UTLY (U150)	LOWACQ
Utility 3 IC	G3331	UTLY (U810)	LOWACQ
Utility 4 IC	G3341	UTLY (U110)	LOWACQ
Demux 1 Master	G341X	DMUX (U1140)	LOWACQ
Demux 1 Slave	G342X	DMUX (U1340)	LOWACQ
Demux 2 Master	G343X	DMUX (U1000)	UPACQ
Demux 2 Slave	G344X	DMUX (U1400)	UPACQ
Demux 3 Master	G345X	DMUX (U1100)	LOWACQ
Demux 3 Slave	G346X	DMUX (U1300)	LOWACQ
Demux 4 Master	G347X	DMUX (U1050)	UPACQ
Demux 4 Slave	G348X	DMUX (U1450)	UPACQ
Flash 1 > Utility	G3511	SHF (U650), UTLY (U850)	LOWACQ, CAL
Flash 2 > Utility	G3521	SHF (U350), UTLY (U150)	LOWACQ, CAL
Flash 3 > Utility	G3531	SHF (U610), UTILY (U810)	LOWACQ, CAL
Flash 4 > Utility	G3541	SHF (U310), UTLY (U110)	LOWACQ, CAL
Utility 1 to DMX	G3611	UTLY (U850), DMUX (U1140)	LOWACQ
Utility 1 to DMX	G3612	UTLY (U850), DMUX (U1340)	LOWACQ
Utility 2 to DMX	G3621	UTLY (U150), DMUX (U1000)	LOWACQ, UPACQ
Utility 2 to DMX	G3622	UTLY (U150), DMUX (U1400)	LOWACQ, UPACQ

ManualsPlus.com

Table 3-19 — Digitizer Processor Self-Test/Extended Diagnostics Error Index Codes (Cont.)

Area	Error Index	Suspect Hybrid/ IC FRUs	Suspect Board FRUs
Utility 3 to DMX	G3631	UTLY (U810), DMUX (U1100)	LOWACQ
Utility 3 to DMX	G3632	UTLY (U810), DMUX (U1300)	LOWACQ
Utility 4 to DMX	G3641	UTLY (U110), DMUX (U1050)	LOWACQ, UPACQ
Utility 4 to DMX	G3642	UTLY (U110), DMUX (U1450)	LOWACQ, UPACQ
DmxRAM Pipe1	G37XX	DMUX (U1140, U1340)	LOWACQ, UPACQ, WAVPROC (SIG-PROC)
DmxRAM Pipe2	G38XX	DMUX (U1000, U1400)	UPACQ, WAVPROC (SIGPROC)
DmxRAM Pipe3	G39XX	DMUX (U1100, U1300)	LOWACQ, UPACQ, WAVPROC (SIG-PROC)
DmxRAM Pipe4	G3AXX	DMUX (U1050, U1450)	UPACQ, WAVPROC (SIGPROC)
Trigger A Test	G3B1X	TRIG (U160)	UPACQ, WAVPROC (SIGPROC)
Trigger B Test	G3B2X	TRIG (U140)	UPACQ, WAVPROC (SIGPROC)

ManualsPlus.com

Enhanced Accuracy State Troubleshooting

Table 3-20 lists the error messages that are possible in the Enhanced Accuracy state and the respective suspect FRUs and FRU ICs. The suspect FRUs and FRU ICs are listed in the most-to-least likely cause of the error message. Enhanced Accuracy is available after the system has a 20-minute warmup period.

***Table 3-20** — Enhanced Accuracy State Error Messages and Troubleshooting*

Error Message	Suspect FRU and FRU ICs
Vertical System Out of Specification	Plug-ins, SHF(U650), SHF(U350), SHF(U610), SHF(U310), LOWACQ, CAL, PIINT
A/D Pipe 1	SHF(U650), LOWACQ, CAL
A/D Pipe 2	SHF(U350), LOWACQ, CAL
A/D Pipe 3	SHF(U610), LOWACQ, CAL
A/D Pipe 4	SHF(U310), LOWACQ, CAL
Main Time Interpolator	TIME(U820), TRIG(U610), SWP, UPACQ, CAL
Window Time Interpolator	TIME(U330), TRIG(U410), SWP, UPACQ, CAL
Main Fine Holdoff	SWP, UPACQ, CAL
Window Fine Holdoff	SWP, UPACQ, CAL
Main Trigger Level	Plug-ins, TRIG(U610), SWP, SHF(U650), UPACQ, CAL, LOWACQ, PIINT
Window Trigger Level	Plug-ins, TRIG(U410), SWP, SHF(U650), UPACQ, CAL, LOWACQ, PIINT
Main Pulsewidth	SWP, UPACQ, CAL
Window Pulsewidth	SWP, UPACQ, CAL
EErom Store	DIGCPU
Main Time Interpolator Histogram	TIME(U820), TRIG(U610), UPACQ, CAL
Window Time Interpolator Histogram	TIME(U330), TRIG(U410), UPACQ, CAL
Interleave Alignment	CLKDR, SHF(U650), SHF(U350), SHF(U610), SHF(U310), UPACQ, LOWACQ, CAL
High Frequency Compensation	SHF(U650), SHF(U350), SHF(U610), SHF(U310), LOWACQ, CAL, CLKDR, UPACQ

ManualsPlus.com

Table 3-20 — Enhanced Accuracy State Error Messages and Troubleshooting (Cont.)

Error Message	Suspect FRU and FRU ICs
Slow Risetime, HF Compensation	SHF(U650), SHF(U350), SHF(U610), SHF(U310), LOWACQ, CAL

Note: *In Table 3-20, A/D denotes an analog-to-digital converter.*

Probe Compensation Troubleshooting

Table 3-21 lists the error messages that are possible when performing probe compensation, and the respective suspect faulty FRUs and FRU ICs. The suspect FRUs and FRU ICs are listed in order of the most-to-least likely cause of the error message.

Table 3-21 — Probe Compensation Error Messages and Troubleshooting

Error Message	Suspect FRU and FRU ICs
Probe gain/offset calibration error	Probe, Plug-in
DIG high frequency compensation failed	Left Plug-in, SHF(U650), SHF(U350), SHF(U610), SHF(U310), LOWACQ, CAL, CLKDR, UPACQ
DIG risetime too slow for high frequency compensation	Proge, Left Plug-in, SHF(U650), SHF(U350), SHF(U610), SHF(U310), LOWACQ, CAL, CLKDR, UPACQ
DIG interleave alignment calibration failed	Left Plug-in, CLKDR, SHF(U650), SHF(U350), SHF(U610), SHF(U310), UPACQ, LOWACQ, CAL
DIG trigger IC internal path skew failed	TRIG(U610), TRIG(U410), SWP, UPACQ, LOWACQ, CAL

ManualsPlus.com

Other Troubleshooting

The following procedures are for troubleshooting a faulty Power Supply module, A4 Regulator board, CRT, A24 CRT Driver board, A25 Degauss board, A26 Geometry board, A27 CRT Socket board, and A13 Mother board.

Power Supply Module

This procedure requires an Extended Diagnostics 11000-Series Power Supplies Troubleshooting Fixture. Refer to Table 2-2, Test Equipment, for a complete description of the equipment required.

If any Power Supply module problems are present, they appear when the ON/STANDBY switch is set to ON. If the green light beside the ON label fails to light then check the following:

- ☐ Step 1: Ensure that the PRINCIPAL POWER SWITCH located on the rear panel is in the ON position.
- ☐ Step 2: Ensure that the line cord is connected to a functional power source with the same output voltage as the setting of the LINE VOLTAGE SELECTOR on the rear panel.
- ☐ Step 3: Ensure that the fuse is good. If the fuse is blown, then replace the fuse as described.
- ☐ Step 4: Ensure that the fan exhausts air from the DSA when the ON/STANDBY switch is ON. A defective fan causes an over-temperature shutdown in the power supply.

If these steps fail to correct the problem, then connect the Extended Diagnostics 11000-Series Power Supplies Troubleshooting Fixture to the Power Supply module (refer to the documentation accompanying the text fixture for troubleshooting techniques). The test fixture indicates which power supply voltage source is at fault. To help isolate the source of the problem, set the ON/STANDBY switch to STANDBY, and disconnect the suspected faulty power supply voltage source from the Power Supply module. Set the ON/STANDBY switch to ON. If the test fixture does not record a fault, then you have verified the suspected faulty power source. This procedure is only effective for externally shorted power supplies. Once again, refer to documentation accompanying the test fixture for more troubleshooting tips.

A4 Regulator Board

This board is implicitly verified; that is, if all the other FRUs pass diagnostic testing, you can assume that the A4 Regulator board is operating correctly as well.

CRT, A16 Display Controller Board, A24 CRT Driver Board, A25 Degauss Board, A26 Geometry Board, and A27 CRT Socket Board

This procedure requires a test terminal and a compatible RS-232-C serial interface cable. Refer to Table 2-2, Test Equipment, for a complete description of the equipment required.

ManualsPlus.com

Module Troubleshooting—If the DSA powers-on (the ON/STANDBY light is on), but the display gives scrambled information or none at all, then the CRT, A24 CRT Driver board, A26 Geometry board, A27 CRT Socket board, or the A16 Display Controller board are suspect. Two different procedures are described here to help you determine which of these boards is at fault.

☐ Step 1: With the power off (ON/STANDBY switch to STANDBY), remove the top cover, then turn the power on. Observe the two LEDs on the A16 Display Controller board and those on the A17 Main Processor board in the card cage. These LEDs flicker on and off until the diagnostic tests are complete, then these LEDs should all turn off. If any of these LEDs remain lit, it indicates a problem with the board on which the LED resides. If all LEDs turn off, then the CRT or A24 CRT Driver board is suspect.

☐ Step 2: With the power off, connect a test terminal (ANSI 3.64-compatible) with an RS-232-C cable. Touch the screen through the full power-on cycle to force a diagnostic error so the DSA enters Extended Diagnostics. On the test terminal type **T** to display the **EXTENDED DIAGNOSTICS** menu structure on the terminal display. If the displayed errors are only for the front panel touch screen, then the CRT or the A24 CRT Driver board is at fault. Note any other errors, and use the Table 3-15, Display Processor Self-Test/Extended Diagnostic Error Index Codes, to identify a suspect board. To further troubleshoot the CRT, A24 CRT Driver board, A25 Degauss board, A26 Geometry board, and A27 CRT Socket board, use the following list of symptoms to identify a faulty FRU.

CRT—The following is a list of symptoms that may indicate a faulty CRT. The symptoms are listed in the order of most likely to occur to least likely to occur if the CRT is faulty.

1. When the DSA is powered on (ON/STANDBY switch is set to ON), the display screen remains completely blank.
2. There are areas on the display that are void or have burn marks visible.
3. Electrical arcing occurs on the CRT when the DSA is powered on.
4. The display appears dim and/or you cannot adjust the display for the proper color brightness or balance among the red, blue, and green colors.

A24 CRT Driver board—The following is a list of symptoms that may indicate a faulty A24 CRT Driver board. The symptoms are listed in the order of most likely to occur to least likely to occur if the A24 CRT Driver board is faulty.

1. The power supply attempts to warn you of a current limiting condition in the following ways:
   - LEDs DS370, DS372, DS374, and DS376 on the A2A2 Control Rectifier board are flashing (see Fig. 3-47)
   - the front panel MENUS LEDs are flashing
   - the power supply outputs repetitive high pitched warning sounds

ManualsPlus.com

If any of these symptoms appear, then set the ON/STANDBY switch to STANDBY. Disconnect connectors J76 and J94 from the A24 CRT Driver board, and then set the ON/STANDBY switch to ON. If the display appears, the A24 CRT Driver board is suspect.

2. With the DSA powered-on, a bright line appears down the middle of the display screen.

3. One or more colors are not visible on the display. To verify that all of the colors are visible, perform the following steps.

☐ Step 1: Press the UTILITY button, and then touch **Color Selection**.

☐ Step 2: Touch **Graticule** in the **Color Selection** pop-up menu.

☐ Step 3: Set the **Lightness** to 20% and the **Saturation** to 100%.

☐ Step 4: Adjust the **Hue** setting and verify that red is visible at 120°, green is visible at 240°, and blue is visible at 0° (360°).

4. The display appears dim and/or you cannot adjust the display for the proper color brightness or balance among the red, blue, and green colors.

A25 Degauss board—If there are obvious color impurities on the display, and this condition is not corrected when you power off and then power on the DSA with the ON/STANDBY switch, then the A25 Degauss board is suspect.

A26 Geometry board—The following is a list of symptoms that may indicate a faulty A26 Geometry board. The symptoms are listed in the order of most likely to occur to least likely to occur if the A26 Geometry board is faulty.

1. Distortion at the top and bottom of the display image that cannot be corrected with the adjustments on the A26 Geometry board.

2. When the DSA is powered on (ON/STANDBY switch is set to ON), the display screen remains completely blank, and when the ON/STANDBY switch is set to STANDBY, the customary flash on the screen does not appear.

3. The display shows nothing but faint vertical lines.

ManualsPlus.com

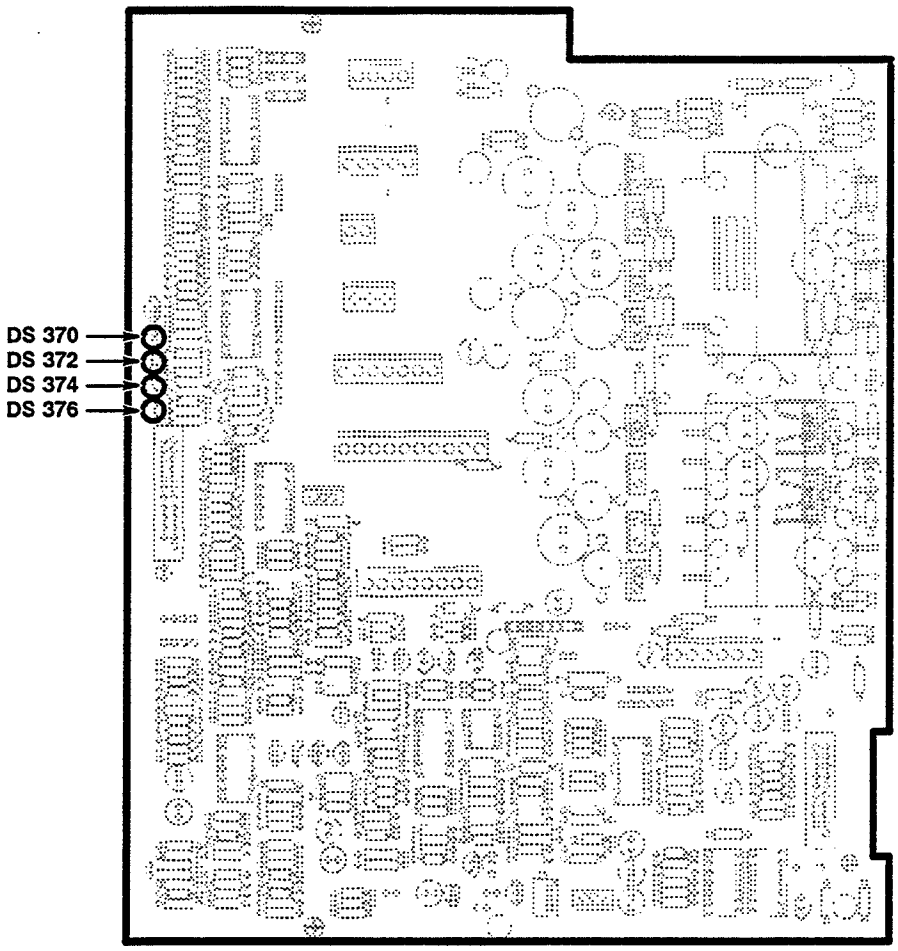

Figure 3-47 — A2A2 Control Rectifier Board LEDs

A27 CRT Socket board—The following is a list of symptoms that may indicate a faulty A27 CRT Socket board. The symptoms are listed in the order of most likely to occur to least likely to occur if the A27 CRT Socket board is faulty.

1. Poor convergence of the red, green, and blue colors that form the graticules. And, this condition cannot be corrected with the Convergence adjustment on the A27 CRT Socket board.
2. One or more colors are not visible on the display. To verify that all of the colors are visible, perform the following steps.

☐ Step 1: Press the UTILITY button, and then touch **Color Selection**.

☐ Step 2: Touch **Graticule** in the **Color Selection** pop-up menu.

☐ Step 3: Set the **Lightness** to 20% and the **Saturation** to 100%.

☐ Step 4: Adjust the **Hue** setting and verify that red is visible at 120°, green is visible at 240°, and blue is visible at 0° (360°).

ManualsPlus.com

3. An unusually bright screen that cannot be corrected using the manual adjustments.
4. The display screen remains completely blank when the DSA is powered on (ON/STANDBY switch is set to ON); and when the ON/STANDBY switch is set to STANDBY, the customary flash on the screen does not appear.

A13 Mother Board

This board is implicitly verified; that is, if all the other FRUs pass diagnostic testing, then you can assume that the A13 Mother board is operating correctly as well.

Fuse Testing

The A14 I/O board has four fuses (see Fig. 3-48). F200 supplies +5 V to the A12 Rear Panel board. F800 supplies +5 V to the A10 Front Panel Control board and the A9 Touch Panel board. F600 supplies +15 V to the A14 I/O board, card cage, A10 Front Panel Control board, A9 Touch Panel board, A11 Front Panel Button board, and A12 Rear Panel board (reduced to +12 V). F602 supplies −15 V to the A14 I/O board, card cage, A10 Front Panel Control board (reduced to −5 V), and A12 Rear Panel board (reduced to −12 V).

- F200 supplies +5 V to the A12 Rear Panel board. If diagnostics report failure of all three panel ports (RS-232-C, GPIB, and PRINTER), then this fuse is the probable suspect, assuming that the ribbon cable to the A12 Rear Panel board is powered on. (When tested with a multimeter, this fuse should measure less than 1.5 V.)
- F800 supplies +5 V to the A10 Front Panel Control board and the A11 Front Panel board. If the diagnostics report both an A9 Touch Panel board failure and knob failures, then this fuse is one possible source of this problem. (When tested with an multimeter, this fuse should measure less than 1 Ω.)
- F600 supplies +15 V to the A14 I/O board temperature sensor and tone generator, the lights of the A11 Front Panel Button board, the A9 Touch Panel board, the A12 Rear Panel board's RS-232 output line drivers, the card cage, and the A17 Main Processor board's NV RAM. If the NV RAM battery test and the RS-232 External Loop Back test fail, but the Internal Loop Back test passes, and the A11 Front Panel Button board's lights, temperature sensor, and tone generator are all off, then this fuse is the probable suspect. When tested with an multimeter, this fuse should measure less than 1 Ω.
- F602 supplies −15 V to the A14 I/O board temperature sensor and tone generator, A12 Rear Panel board's RS-232 output line drivers, the A9 Touch Panel board, and the card cage. If the temperature sensor, tone generator, and RS-232 External Loop Back test fail, but the Internal Loop Back test passes, then this fuse is the probable suspect. (When tested with an multimeter, this fuse should measure less than 1Ω.)

The A14 I/O board uses the +15 V and −15 V supplies on board to operate the temperature sensor and the tone generator. Of the other card cage boards, the A17 Main Processor board uses the +15 V supply to operate the NV RAM

ManualsPlus.com

circuitry. The information above and Table 3-22 will help you to identify a failure of one of these fuses. If a test fails, then check the fuses.

CAUTION *Using a replacement fuse with an incorrect current rating may cause ribbon cables to melt and create fire danger during a component fault.*

The DSA line fuse (F99) is located on the rear panel of the DSA. Replace the line fuse (F99) with a fuse of the proper type and rating.

Note: *Line fuse (F99) is used for both 115 V and 230 V operation. This same fuse can be used when switching the LINE VOLTAGE SELECTOR switch between 115 V and 230 V.*

See Figures 3-8 and 3-48 for the location of the line fuse and the A14 I/O board fuses, respectively.

When a fuse must be replaced, unsolder the fuse from the board. Be careful not to damage the solder pads on the board. (It may be helpful to straighten the fuse leads on the rear of the board before removing the leads from their holes in the circuit board.) Refer to Section 5, Replaceable Parts for the correct value and part number of each fuse.

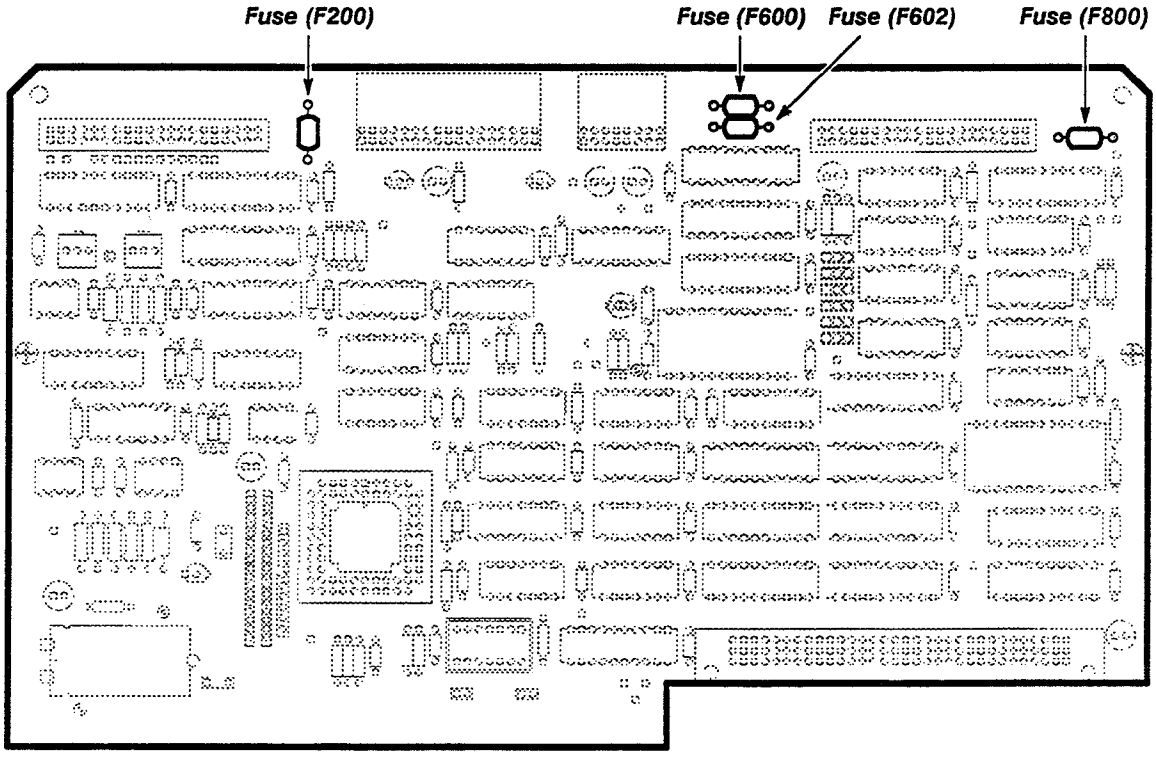

Figure 3-48 — A14 I/O Board Fuse Locator Diagram

ManualsPlus.com

***Table 3-22** — A14 I/O Board Fuse Failures*

Fuse	Kernel Test Failure J715 – J710	Test Failure J715 – J710
F200 open	OB*hex* (GPIB Interrupt)	
F800 open	OB*hex* (Front Panel Inter) **Note:** *Front panel lights are not lit. The code must be read from the Error Status test points (TP200–TP205) on the A17 Main Processor board.*	
F600 open	Passes the Kernel diagnostic tests, but the front panel lights are not lit.	Exec Control E1511 2 NV RAM E1411 2 Battery E1411 1 Data Lines E1421 1 *Addr/Data E1431 1 Internal I/O E3111 1 Temp Sensor E3111 1 Comparator E3111 1 *Tone Gen – *Ramp Tone (works) **Note:** *The front panel lights, soft keys, and hard keys will not operate.*
F602 open	OE*hex* (Front Panel Inter) *Note: The tone generator has a very different tone.*	

**Indicates a Manual Test forced by the operator and not automatically executed by Self-Test diagnostics.*

ManualsPlus.com

Theory of Operation

The DSA 601 and DSA 602 are high-resolution digitizing signal analyzers that provide three plug-in compartments for up to twelve input channels. Features include:

- 1 GHz system bandwidth
- autoset to provide a suitably-adjusted display for viewing and further manual adjustment
- windows for vacquiring selected sections of a trace at a high sample rate
- Self-Test diagnostics to assure continuous accuracy of waveform data and measurements
- digital waveform storage and display
- on-board measurement capabilities
- menu driven touch-screen operation
- RS-232-C, GPIB, and PRINTER interfaces
- color display

ManualsPlus.com

System Functional Overview

This section describes and illustrates the major functional blocks of the DSA 601 and DSA 602 (see Fig. 4-1).

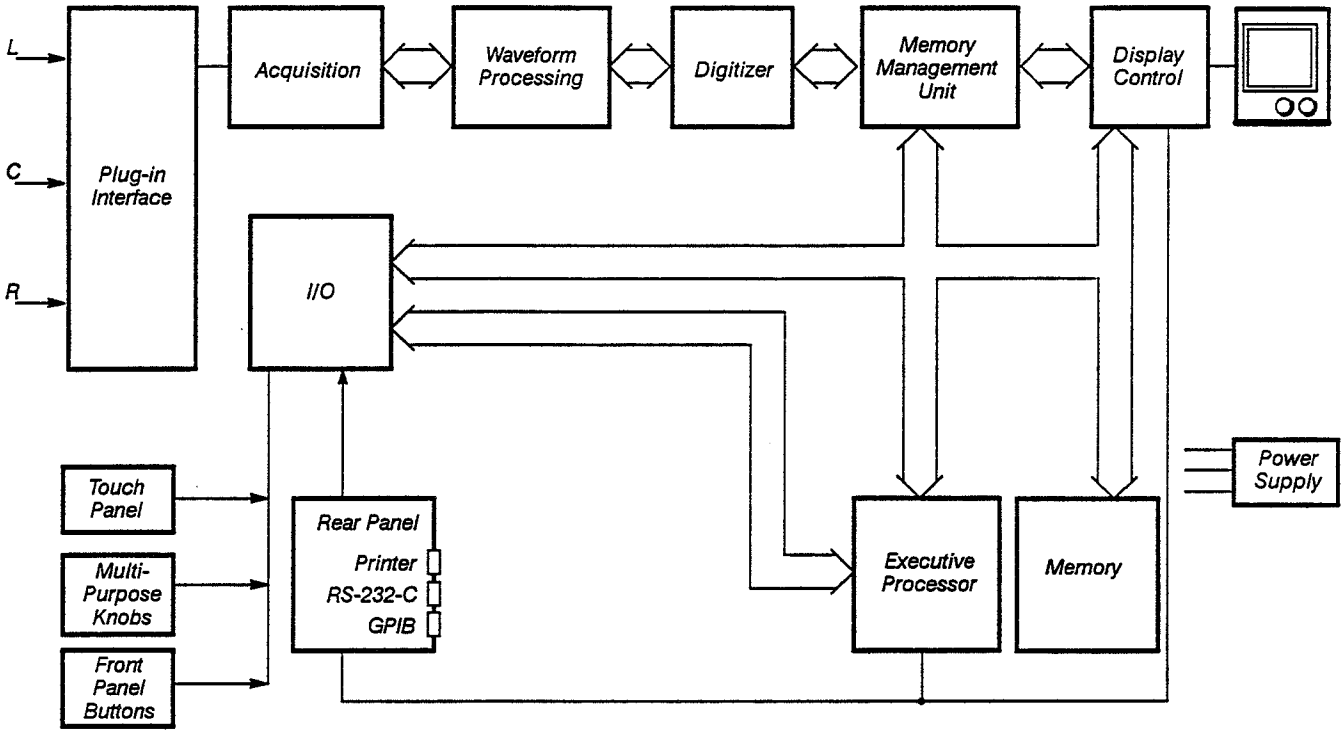

***Figure 4-1** — DSA 601 and DSA 602 System Functional Block Diagram*

Plug-in Interface Block

The Plug-in Interface block is the interface between the plug-in unit input signals and the Acquisition block of the DSA. The Plug-in Interface block accommodates up to four input channels for the left, center, and right plug-in compartments, for a total of up to twelve input channels.

Acquisition Block

The Acquisition block acquires the analog data from the Plug-in Interface block, digitizes the data under the control of the Digitizer block through the Waveform Processing block, and then stores this data in high-speed RAM for the Waveform Processing block. The Acquisition block is capable of acquiring and storing the input data at a high rate of speed. The Waveform Processing block then reads the data out of the high-speed RAM at a slower rate.

Waveform Processing Block

The Waveform Processing block reads the waveform data from the high-speed RAM on the Acquisition block, and then deposits the waveform data in local RAM for the Digitizer Block. The Waveform Processing block may also perform processing operations on the waveform data before the Digitizer block receives the data.

ManualsPlus.com

Digitizer Block

The Digitizer block receives commands from the Executive Processor block through the Memory Management Unit block. These commands are primarily based upon the user-selected settings (front panel buttons, control knobs, and touch panel) of the DSA.

The communication path with the Executive Processor block allows the Digitizer block to control the operations of the Acquisition and Waveform Processing blocks.

Memory Management Unit Block

The Memory Management Unit (MMU) arbitrates requests for access to the Memory block from the three DSA subsystems:

- the Display
- the Digitizer
- the Executive

This arbitration allows all three subsystems transparent access to the Memory block.

Display Control Block

The Display Control block of the DSA provides all the visual output. This includes not only data output such as waveform traces, graticules, axes, and annotation, but displays supporting the human interface as well (which include menus, labeling for touch panel input, and an interactive output to assist in operating the system; that is, the current mode-setting information).

The DSA uses a custom vertical raster-scan display that provides excellent resolution for both waveform display and text. The Display Control block produces a display as follows:

1. The Display system receives waveform data from the MMU.
2. The Display system compresses the waveform data into 512 horizontal pixels.
3. The Display system converts the compressed waveform data into a format compatible with the vertical raster-scan display.

I/O Block

The I/O block provides an interface to the Rear Panel block, touch panel, multi-purpose knobs, and front panel buttons.

ManualsPlus.com

Front Panel Controls

You control the DSA using:

- the front panel (major-menu) buttons
- the touch panel
- the multi-purpose knobs

The multi-purpose knobs control the function of the particular item that is selected. The major menu buttons are the top-level menu selections for the DSA. Touching an icon, menu item, or waveform selects that particular icon, menu item, or waveform, respectively.

Rear Panel Block

The Rear Panel block provides a GPIB port, an RS-232-C port, and a PRINTER port for interfacing various peripheral devices.

Executive Processor Block

After you request an operation (with a front panel control for instance), the Executive processor (EXP) directs the DSA to perform this operation.

Another primary function of the EXP is to execute Self-Test diagnostics on the DSA when powering-on or upon your request. To control these operations, the EXP controls and monitors the other boards sharing the Executive system bus. Through the Executive bus boards, the EXP also indirectly controls all other DSA boards. The EXP generates commands and status signals to control on-board devices and I/O devices (such as GPIB and RS-232-C interfaces) which process data and control the rest of the DSA.

Memory Block

The main function of the Memory block is to provide the EXP with RAM and EPROM for waveform storage and most other DSA operations. The EXP initiates all accesses to RAM and ROM. Support circuitry for these memories and the diagnostic circuitry for troubleshooting are also contained in this block.

Power Supply

The DSA operates from either a 115 V or 230 V nominal line voltage source at a line frequency between 48 and 72 Hz. The LINE VOLTAGE SELECTOR switch on the rear panel of the DSA allows selection of AC line inputs of 90 to 132 V rms or 180 to 250 V rms.

To apply power to the DSA:

1. Turn the rear panel PRINCIPAL POWER switch to ON.
2. Turn the front panel ON/STANDBY switch to ON.

A small green indicator lamp should light to indicate that the power is on.

ManualsPlus.com

Typical Waveform Processing Cycle

The following is a brief overview of how the DSA acquires, processes, and displays a waveform from the input channels:

1. Analog input signals are connected to the channel inputs (L, C, or R).
2. The Acquisition block acquires, digitizes, and stores this data in high-speed RAM.
3. The Digitizer block controls the process of converting the analog data into digital signals.
4. The Waveform Processing block performs any applicable processing of the data.
5. The digitized signals are then stored in RAM (waveform memory).
6. The EXP processes information from the human interfaces (that is; the menus, icons, buttons, and knobs that you interact with to control the DSA).
7. The EXP sends commands to the Display Control block so that the function that you selected is displayed.
8. When instructed by the EXP, the Display Control block receives the waveform data from waveform memory and converts it to a unique vertical raster-scan format for a display based on your settings.

Detailed Block Diagram

This section describes and illustrates the DSA 601 and DSA 602 DSA detailed block (cabling) diagram (see Fig. 4-2).

ManualsPlus.com

ManualsPlus.com

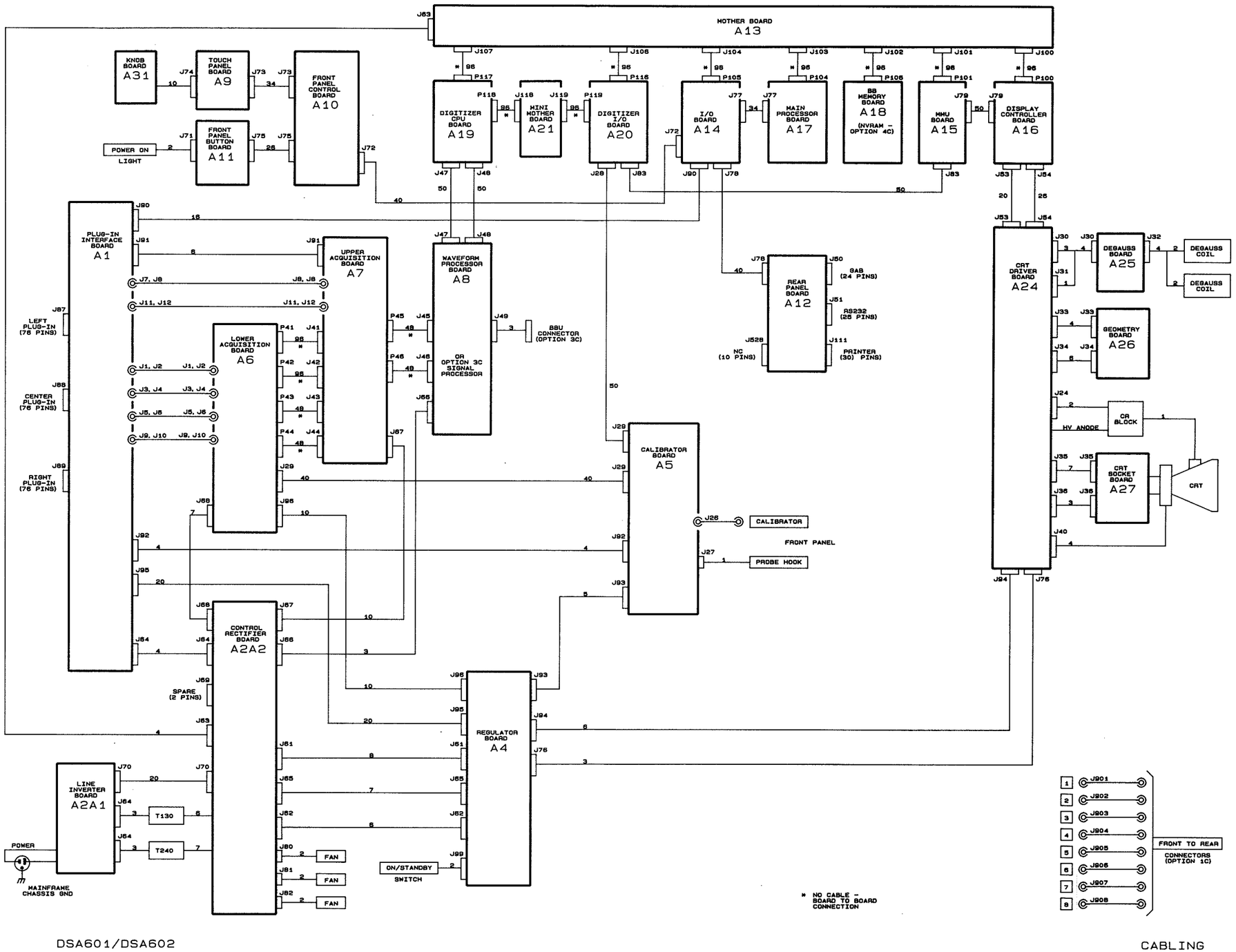

Figure 4–2 *– DSA 601 and DSA 602 Detailed Block (Cabling) Diagram*

ManualsPlus.com

A1 Plug-in Interface Board

The A1 Plug-in Interface board is the interface between the plug-in units and the other DSA subsystems (Executive, Display, and Digitizer). This board performs the following functions:

- routes signals and voltages within the DSA through the A1 Plug-in Interface board
- busses power supply voltages from the Power Supply module

There are no active components on the A1 Plug-in Interface board.

A4 Regulator Board

The regulators convert semi-regulated voltages into stabilized low-ripple output voltages. The A4 Regulator board consists of the following regulators and the fault-detect circuitry:

- −5 V
- +5 V
- −15 V
- +15 V
- −50 V
- +50 V

The +50, +15, +5, −50, −15 and −5 V regulators use operational amplifiers that require the following supplies (and the respective voltages each generates):

- a semi-regulated +54 V supply generates +20 V
- a semi-regulated −54 V supply generates −20 V
- a semi-regulated +54 V supply generates +10 V
- a semi-regulated −54 supply generates −10 V
- a +10.0 V ref is used as a reference voltage.

See Figure 4-3 for a block diagram of this board.

The Voltage Fault-Detect Circuitry—consists of two window comparators and associated resistors. This circuitry detects if any regulated supply is over voltage or under voltage. The associated resistors set a hysteresis window that is 5% of the regulator sense line voltages.

ManualsPlus.com

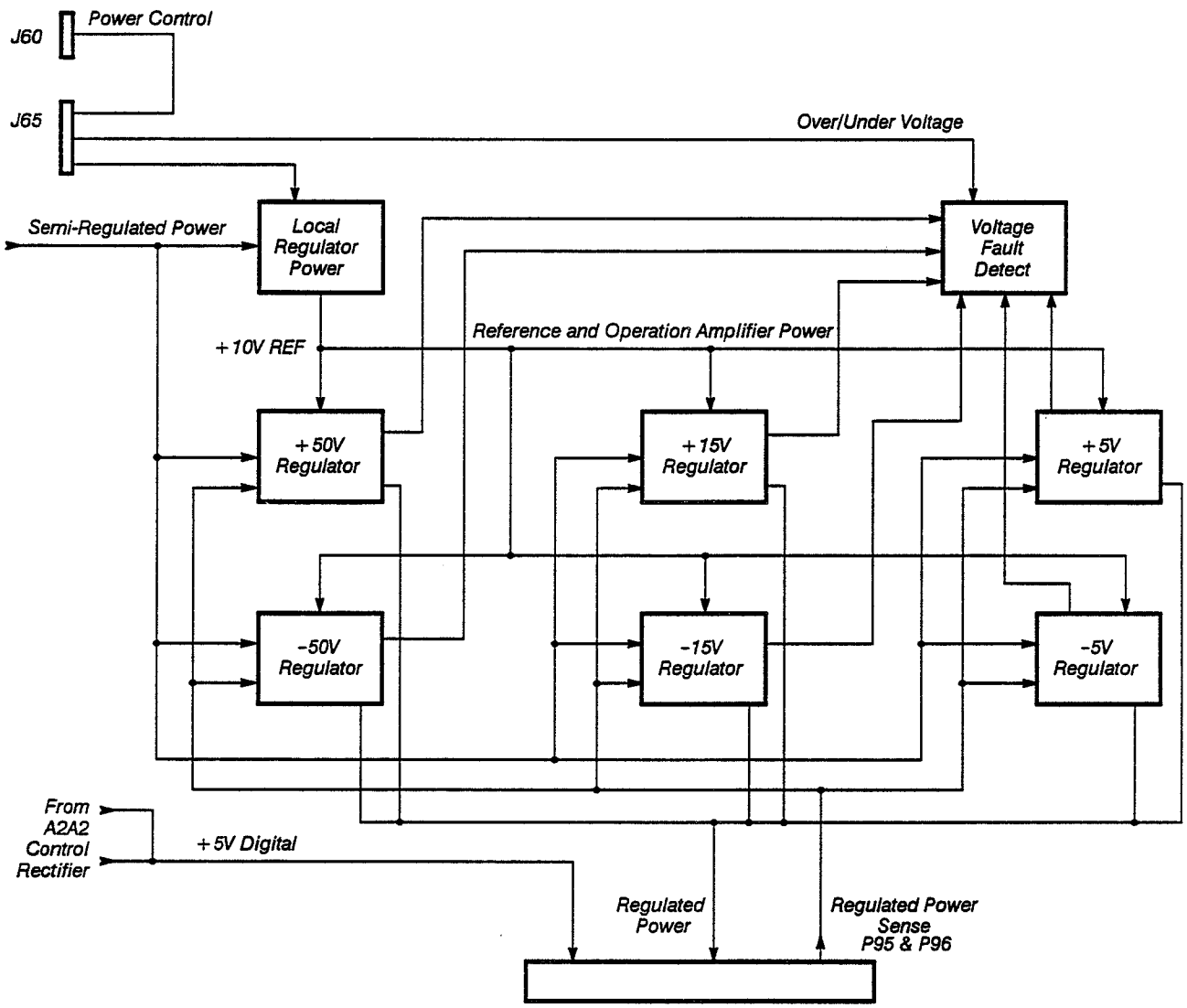

Figure 4-3 — *A4 Regulator Board Block Diagram*

ManualsPlus.com

A5 Calibrator Board

The A5 Calibrator board outputs three calibration signals to the front panel calibrator outputs and 48 programmable voltage sources for the analog control voltage system (ACVS). The A5 Calibrator board consists of the following:

- precision DC reference source
- front panel calibrator
- analog control voltage system (ACVS)
- programmable array logic (PAL)
- microprocessor

See Figure 4-4 for a block diagram of this board.

Precision-DC reference source—consists of a digital-to-analog converter (DAC), a passive attenuator, multiplexers, buffers, and associated control-logic circuitry. The on-board microprocessor controls the DAC, multiplexers, and control logic. A buffered DC output signal is sent to the front panel calibrator circuitry and the A1 Plug-in Interface board. When a DC signal is applied to the amplifiers, the ground reference of the signal must be the same as the local ground of the amplifiers. To accomplish this, the ground potential in the amplifier is used as a ground reference for the DAC. YCAL, an unbuffered output of the DAC, is sent to the Acquisition system (the A6 Lower Acquisition and A7 Upper Acquisition boards) as a source for the flash analog-to-digital converters (ADCs) CAL inputs during the partial Enhanced Accuracy cycle of DSA.

Front panel calibrator—provides either a DC, 1 kHz or 1 MHz square wave signal to the front panel BNC connector and probe hook. One collector of the differential pair provides a 1 MHz signal to the front panel, while the opposite collector of a pair provides the same signal to the trigger hybrid on the A6 Lower Acquisition board. These signals are used during the automatic calibration cycle of DSA. A TTL version of the 1 MHz signal is sent to the vertical section of the Acquisition system. This signal is also used during the partial Enhanced Accuracy cycle of the DSA. You can select a front panel output impedance of 50 Ω (1 MHz square wave) or 450 Ω (1 kHz square wave).

Analog control voltage system (ACVS)—is part of the circuitry which provides 48 programmable voltage sources that replace the function of front panel potentiometers and internal adjustments. A 12-bit DAC generates the 48 multiplexed voltages. These voltages are then sent to the Acquisition system. The microprocessor receives request for voltage changes from the Digitizer processor, and controls the DAC inputs.

Programmable array logic (PAL)—is responsible for decoding several control signals which are then sent to the Acquisition system. These control signals must be changed dynamically. It is not feasible that the microprocessor perform these functions, due to restrictions on throughput.

ManualsPlus.com

The PAL also generates a control bit which then either clocks data into the read latch or enables the write latch.

The final function of the PAL is to read back an identifier bit which determines the type of DSA (DSA 601 or DSA 602). This data bit is read back on the D0 data line of the Digitizer bus.

Microprocessor—performs three major functions to control the A5 Calibrator board. The first function is to act as a sequencer in providing the 48 control voltage bytes to the ACVS DAC and control logic. The second function is to provide a byte of information for the precision DC reference DAC and the appropriate control logic for the attenuators and latches. The third function is to execute commands sent by the Digitizer processor.

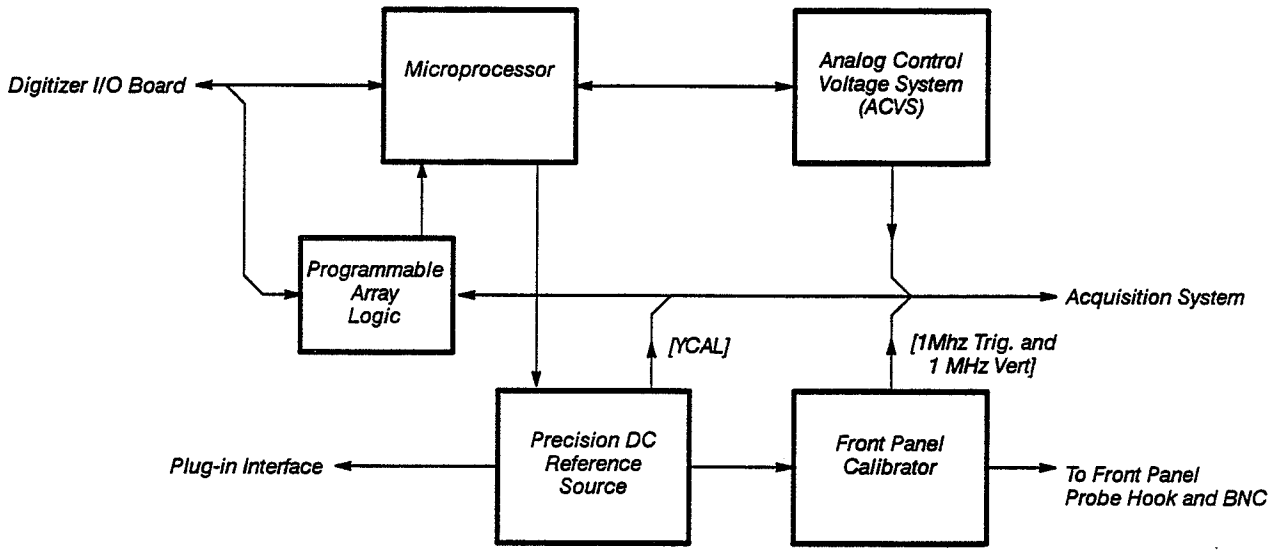

Figure 4-4 — A5 Calibrator Board Block Diagram

ManualsPlus.com

A6 Lower Acquisition and A7 Upper Acquisition Boards

The Acquisition system of the DSA 601 and DSA 602 consists of the A6 Lower Acquisition board and the A7 Upper Acquisition board.

The A6 Lower Acquisition board consists of the following major blocks:

- programmable control voltages
- flash ADCs (two on the DSA 601 and four on the DSA 602)
- utility (two on the DSA 601 and four on the DSA 602)
- demux (two)
- precision DC reference board and fast rise source

The A7 Upper Acquisition board consists of the following major blocks:

- triggers (one main and one window)
- time interpolators (one main and one window)
- programmable control voltage sources
- clock driver circuitry
- demux (two on the DSA 602)
- pseudo random voltage generator
- sweep controller

See Figures 4-5 and 4-6 for block diagrams of these boards.

Triggers—The trigger hybrid receives and processes analog signals from the left, center, and right plug-in compartments. An internal channel switch provides a signal to one input of the trigger comparator (the trigger level you select is applied to the other input). The output of the trigger comparator is applied to the trigger gate latch, which the holdoff signal from the sweep controller resets and enables. The trigger gate latch outputs initialize the time interpolators. The trigger hybrid also provides conditioning of the signal you select (i.e., HF Reject, LF Reject, etc.).

The time interpolator—measures the time between the trigger gate and the sampling clock during each acquisition cycle. This time is then converted to a 10-bit data word which is sent to the sweep controller. This allows for the time placement of an acquisition into the correct location within the waveform record.

Programmable Control Voltages—are required for the Enhanced Accuracy feature of the DSA. The circuitry that provides these control voltages utilizes the multiplexed analog voltages and the select and enable signals generated on the A5 Calibrator board. Sample/hold circuits, level shifters, gain and attenuator stages, and buffers then generate the various control voltages.

ManualsPlus.com

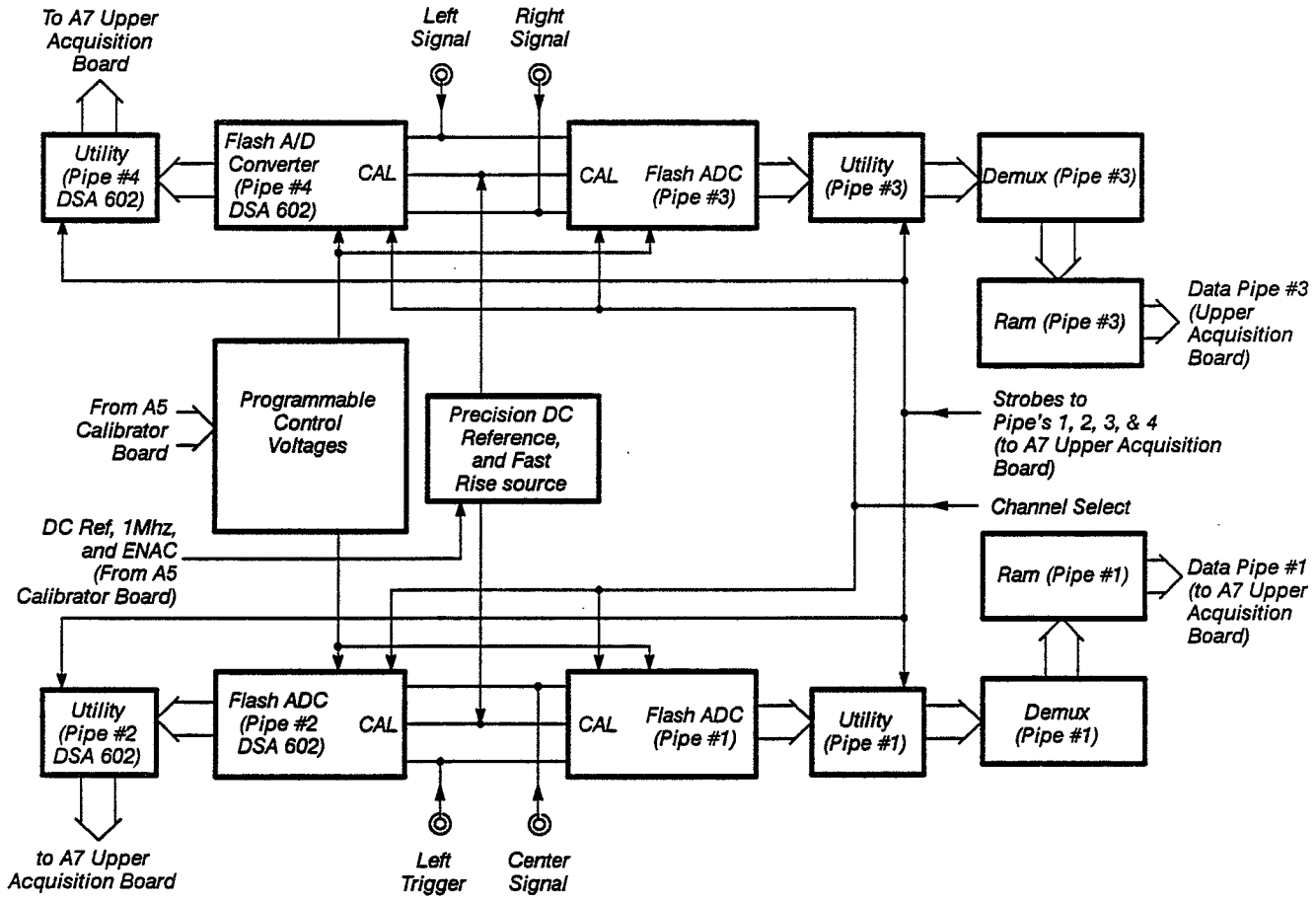

Figure 4-5 — *A6 Lower Acquisition Board Block Diagram*

ManualsPlus.com

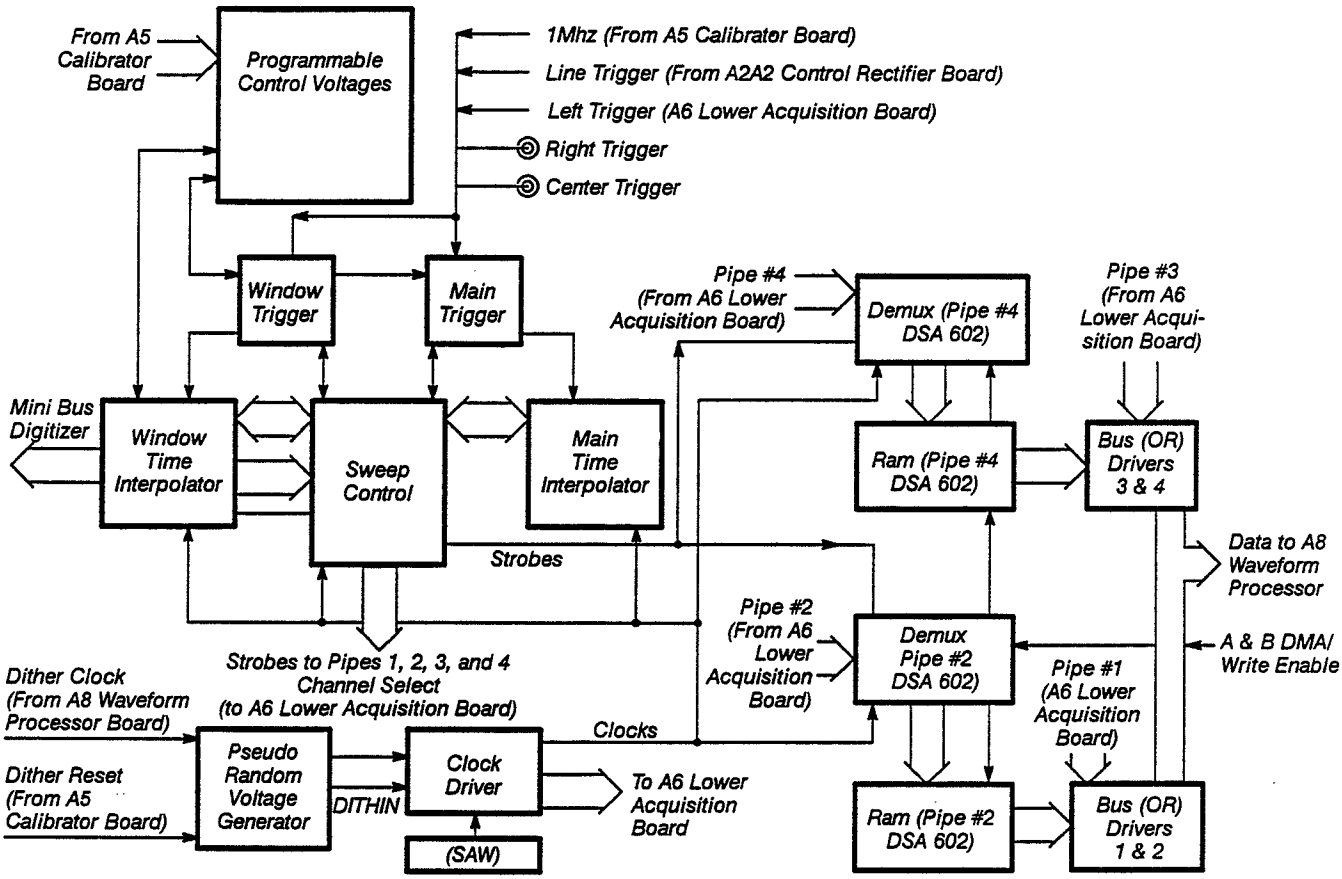

Figure 4-6 *— A7 Upper Acquisition Board Block Diagram*

The clock driver circuitry—provides all of the system clocks for the flash ADC, utility, demux, time interpolator, and sweep controller. The clock driver also provides the phase adjustment of the appropriate clocks; necessary to obtain the gate interleave alignment of the various acquisition pipes (pipes 1 and 3 for the DSA 601, and pipes 1 through 4 for the DSA 602). DITHIN (an input which drives the pseudo-random voltage generator circuitry) changes the phase of the system clocks. This reduces the probability of your signal synchronizing with the system clock.

The flash Analog-to-Digital Converter (ADC)—converts two samples of the selected signal to a pair of 8-bit digital values. Each byte of the pair represents data from one of two internal 250 MHz ADCs. A channel switch at the input selects one of three signals: two from the plug-in compartments or the CAL input. The selected signal is applied to a pair of track/hold circuits through a buffer. The polarity of one of the 250 MHz strobes driving the track/hold circuits is inverted; consequently shifting the phase of one converter by 180 degrees. When the samples of the pair of track/hold circuits are summed and interleaved, a sample rate of 500 Ms/s is obtained.

ManualsPlus.com

The utility—phase aligns the two 8-bit digital signals from the flash ADC to the 500 MHz system clock, interleaving and outputting the pair of 250 Mbyte signals from the flash ADCs to the demux at a 500 Mbyte rate. The utility also limits the digital signal range of the input data.

The demux—sub-samples the 500 MHz data from the utility, and then demultiplexes it into high speed RAM. The demux sub-samples the data from the Utility according to the sample strobes that supply the sweep controller. The demux buffers ten samples of the input data twice and writes those ten samples into the high speed RAM simultaneously. When data is transferred out of the high speed RAM into the signal processing memory, the demux acts as a slave, controlling address and select lines.

The pseudo-random voltage generator—generates a random DC voltage to the clock driver DITHIN input upon the completion of each acquisition cycle. The purpose of these voltages is to provide phase dithering. A PAL, which is configured as a circular shift register, generates 8-bit random data. This 8-bit data drives an ADC which level-shifts and buffers the output to provide the necessary DC levels.

The precision DC reference and fast-rise source—provides differential precision DC and step signals to the CAL inputs of the four acquisition flash ADCs. During the Enhanced Accuracy state of the DSA, these signals adjust the DC gains, DC offsets, and phase alignments of the acquisition pipes.

Sweep Controller—performs two major functions: sub-sample strobe generation and trigger control. Sub-sample strobes are generated at a rate determined by the Digitizer processor, using an algorithm that takes into account such factors as the user-selected acquisition sample rate, the desired record length(s), whether or not a window is enabled, and others. The trigger control circuitry performs several functions: generation of hold-off for Main and Window trigger, holdoff by time, delay by events, two-channel Boolean triggering, and pulse-width triggering. The sweep control operates under the control of the Digitizer processor.

ManualsPlus.com

A8 Waveform Processor Board

The A8 Waveform Processor board consists of two Tristar signal processors. These signal processors process data and control the operations of other ICs. Each signal processor is capable of accessing either data memory. The A8 Waveform Processor board consists of the following functional blocks:

- signal processors (two)
- instruction memory (two)
- data memory (two)
- serial loop interface
- demux interface
- sweep controller interface
- trigger controller
- sample/hold control

See Figure 4-7 for a block diagram of this board.

The signal processors—alone can obtain the waveform points from the Acquisition system. After the signal processors complete the transfer of the waveform points to the data memories, the Digitizer processor can then transfer those waveform points to the A15 MMU board. The signal processors may perform processing operations on the waveform points before the Digitizer processor transfers them to the A15 MMU board.

The signal processors, unlike many processors which have a single data bus for both data and instruction, have two independent data busses and an instruction data bus. The two data busses, data bus 1 and data bus 2, are data/address multiplexed. Control signals must latch the address from these data busses at the beginning of the cycle. Each data bus has a set of control signals to direct the flow of the data.

The signal processors on this board appear as slaves to the Digitizer processor. Signal processor 1 has a priority over signal processor 2. Because the Digitizer processor is a master, it has a higher priority than either signal processor. This priority scheme determines which processor is allowed to access the bus during the bus request cycle.

Interrupts—Both signal processors have the capability to interrupt the Digitizer processor. The Digitizer processor is also capable of interrupting either signal processor.

Instruction Memories—consist of six 8 K x 8 System RAMs (SRAMs). The six SRAMs are divided into two sets (or banks) of three SRAMs, allowing the signal processor to access 3 bytes of an instruction at a time. Instructions are 6-byte words, and the processor accesses the SRAMs twice on each processor cycle.

ManualsPlus.com

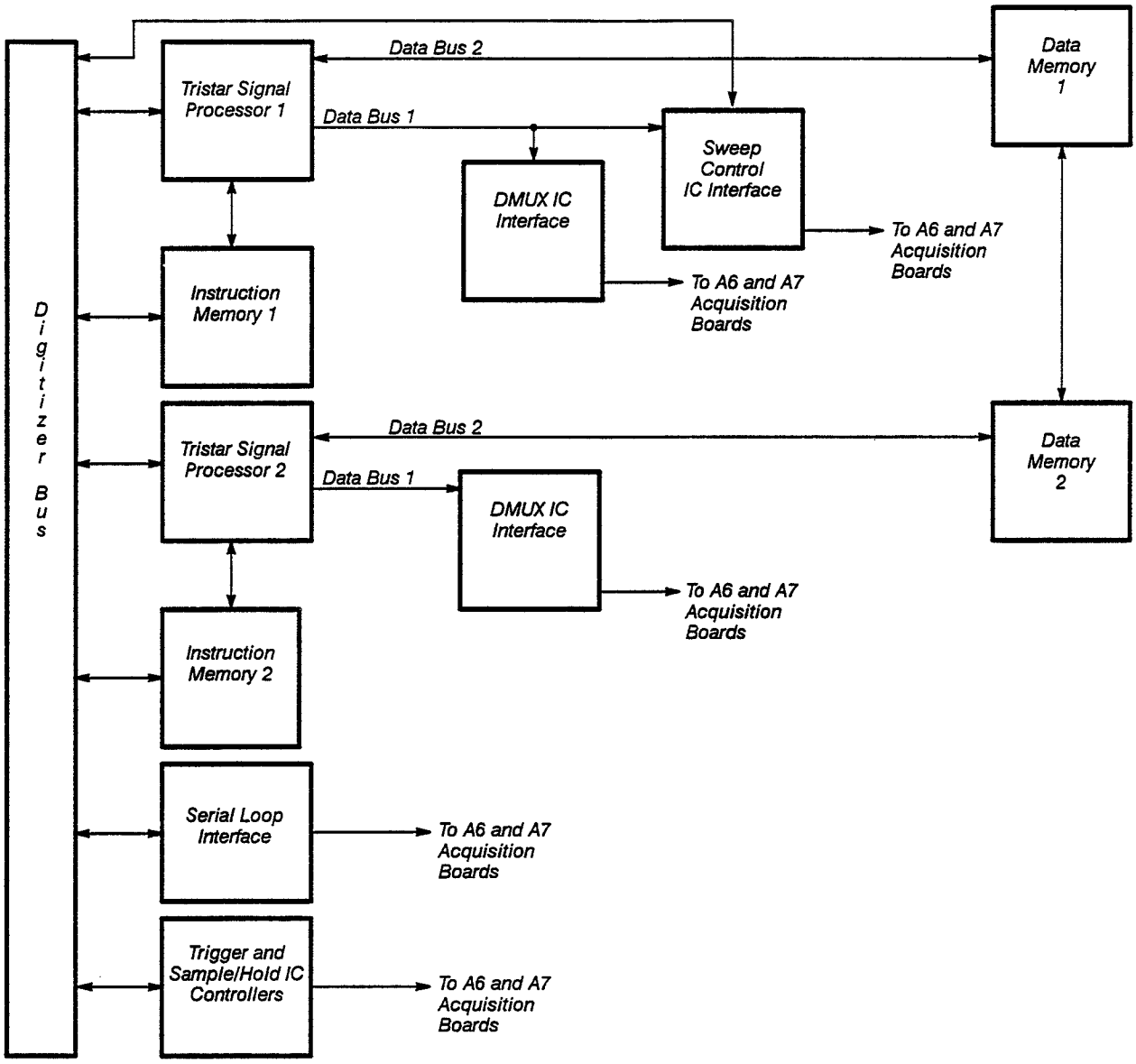

Figure 4-7 *— A8 Waveform Processor Block Diagram*

The Digitizer processor has complete access to the instruction memories. At power-on, the Digitizer processor loads the signal processor instructions to the instruction memories.

Data Memory—is also called the signal processor memory, and is divided into data memory 1 and data memory 2. Each Data Memory consists of four pair of RAMs.

Signal processor 1, signal processor 2, and the Digitizer processor can access this memory. Each signal processor accesses Data Memory through its data bus 2. When the Digitizer processor accesses either Data Memory, the bus request signals are asserted to both signal processors. The Digitizer processor accesses Data Memory when both signal processors acknowledge the requests.

ManualsPlus.com

The serial loop interface—to the demux, utility, and sweep controller, is directly controlled by the Digitizer processor. The interface is through a one-bit serial loop data line and a serial loop clock. During the processor write cycle to the serial loop, data is enabled into the serial loop data line and serial loop clock through a TTL to ECL converter. During the Digitizer processor read cycle to the serial loop, the processor reads the data from the ECL to TTL converter, but does not enable the serial loop clock.

The demux interface—links the demux of the Acquisition system to the signal processors. The signal processors read the acquisition data from the Acquisition system by generating DMA strobe(s) to the Demux. The DMA strobe(s) is(are) generated during the signal processor read cycle by decoding the appropriate addresses. Only one of the DMA strobes from each signal processor may be asserted at a time, except during a flush cycle. Data will be corrupted if pipes 1 and 2, or pipes 3 and 4 are asserted simultaneously. Assertion of the Main and the Window DMA signals simultaneously is not valid.

The sweep controller interface—allows access to the sweep controller from both the Digitizer processor and signal processor 1. A select signal determines which of the two processors can access the sweep controller. This signal selects the Digitizer processor when low and signal processor 1 when high.

The trigger controller—controls the trigger clocks and the trigger slope select signals to the trigger hybrids. Each time the Digitizer processor writes to the A or the B trigger clock location, a pulse for the respective trigger clock is generated to clock the data to the trigger hybrid. During a read cycle, a signal for the A and B trigger clocks enables the respective trigger data to the Digitizer processor.

The sample/hold control—stores the sample and hold control signals. When the Digitizer processor writes to the sample and hold register, the signal will be asserted to load a new set of control signals into the register.

ManualsPlus.com

A8 Signal Processor Board

The A8 Signal Processor board replaces the A8 Waveform Processor if your DSA is equipped with Option 3C.

The A8 Signal Processor board acquires waveform data from the acquisition system, and then processes this data for the Digitizer processor. The A8 Signal Processor board contains the following:

- high speed DMA circuitry
- DMA control circuitry
- DMUX control circuitry
- signal processor RAM
- serial loop interface
- sweep control IC interface
- trigger, flash, and sample and hold control

See Figure 4-8 for a block diagram of this board.

High-speed DMA circuitry—acquires the digitizer data from the Acquisition system, and then places this data in the signal processor RAM. The Digitizer processor can access the digitizer data once it is placed in the signal processor RAM.

The high speed DMA consists of the Memory Address Register (MAR), the Word Count Register (WCR), the Address Increment Register (AIR), the Mode Register (MR), and the DMA control circuitry.

- **MAR**—is a set of registers that store the lower 16-bit address, which is sent to the signal processor RAM. The Digitizer processor or the DMA control circuitry can latch data into the MAR during the DMA cycle.
- **WCR**—is a set of counters that store the number of samples or data to be transferred from the Acquisition system to the signal processor RAM. The Digitizer processor writes to the WCR location to load the WCR with the number of transfers.
- **AIR**—is a set of registers that store the number of addresses to be added to the MAR after each DMA transfer. The Digitizer processor asserts the appropriate control signals to access the AIR.
- **MR**—register selects which DMUX strobe(s) is(are) to be asserted during the DMA cycle. The Digitizer processor asserts the appropriate control signals to access the MR.

The DMA Control Circuitry—can either be in program mode or in DMA mode. The DMA is in the program mode when the DMODE signal is low, and the DMA control circuitry is in the DMA mode when the DMODE signal is high. The Digitizer processor can set the DMA registers when the DMA is in the program mode. After the setup is completed, the Digitizer processor can issue a Start DMA command to change the DMODE signal to the DMA mode and start the DMA transfer.

ManualsPlus.com

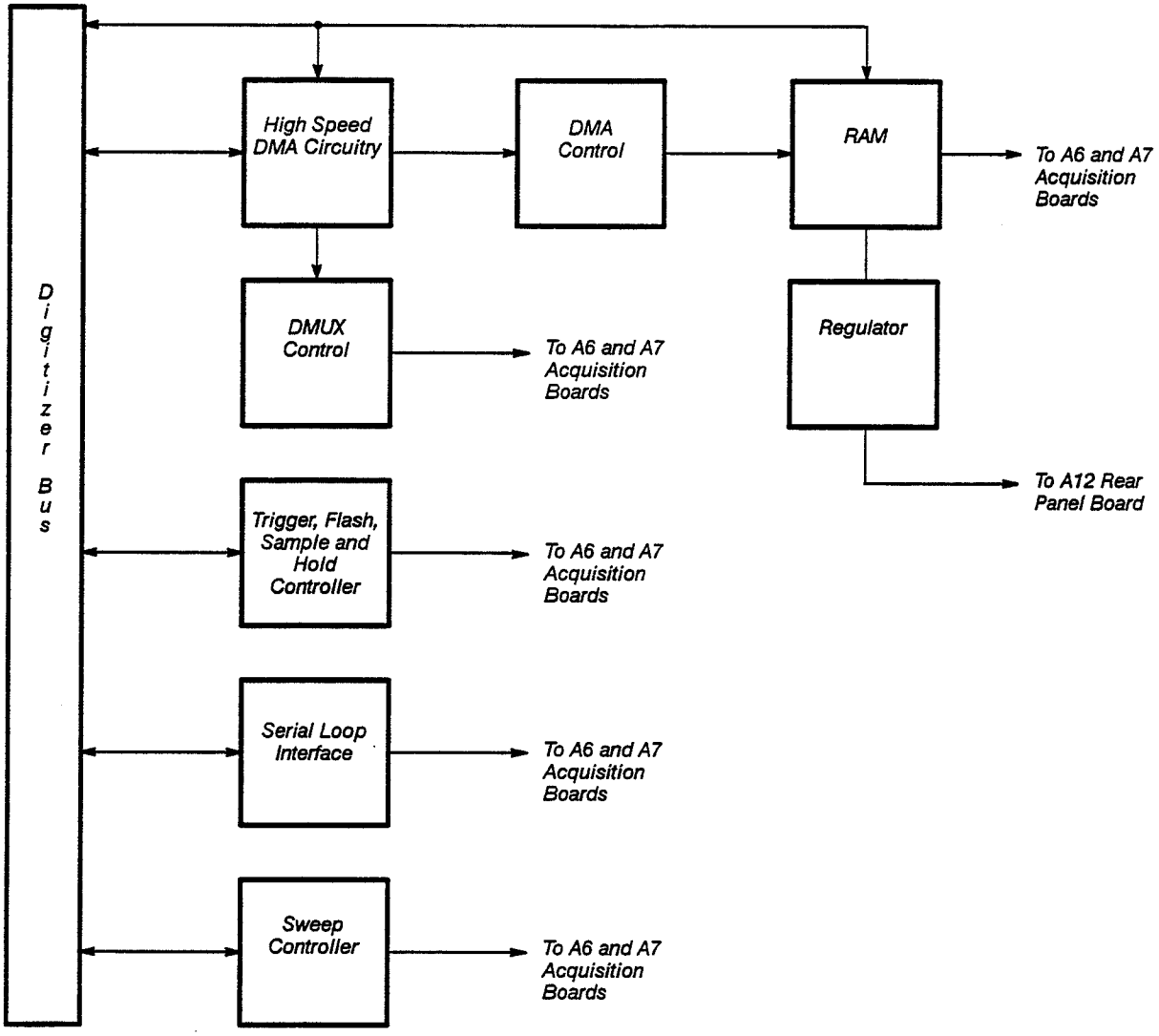

Figure 4-8 *— A8 Signal Processor Board Block Diagram*

The DMA control circuitry acquires the digitized data from the Acquisition system and deposits it in the signal processor RAM during the DMA mode.

The DMA can be set to acquire data from both digitizer channels (that is, the control circuitry can acquire data from the Digitizer pipes 1 and 3, or 2 and 4). The 8-bit digitized data from each digitizer channel is converted to the 16-bit format before they are placed into the respective signal processor memories.

Acquiring data from only one of the two digitizer channels is similar to acquiring data from both channels described above, except that in this case only the data from the selected channel is loaded into the signal processor memory.

The Demux Control Circuitry—generates strobe signals to the Acquisition system. The data is then loaded into the signal processor RAM through the high speed DMA control circuitry.

ManualsPlus.com

The signal processor RAM—contains 512 Kbytes of the RAM that is divided into two 256 Kbytes signal processor memories: one for the digitizer channel 1 (or Digitizer pipes 1 and 2) and the other for the digitizer channel 2 (or Digitizer pipes 3 and 4). This scheme allows the DMA to acquire data from both digitizer channels and deposit the data into the corresponding memories concurrently. The Digitizer processor can access either memory when the DMA is in program mode. In DMA mode, the DMA deposits the digitized data into these two memories.

The serial loop interface—to the demux, utility, and sweep controller, is directly controlled by the Digitizer processor. The interface is through a one-bit serial loop data line and a serial loop clock.

The sweep controller interface—uses the digitizer bus to interface the sweep controller to the Digitizer sub-system. When the Digitizer processor accesses the sweep controller, the chip select is asserted. The chip select controls the data transfer between the Digitizer processor and the sweep controller.

The trigger, flash, and sample/hold controller—contains clocks for the trigger hybrid, sets the trigger slopes, and controls the flash and sample/hold ICs.

The regulator—converts the +5 V to +24 V DC input from the rear panel to back-up voltage. The back-up voltage sustains the contents of the signal processing RAM in the event of a power failure.

ManualsPlus.com

A9, A10, and A11 Front Panel Boards

The A9, A10, and A11 Front Panel circuits consist of the following:

- A9 Touch Panel assembly
- A10 Front Panel Control board
- A11 Front Panel Button board

The touch panel, major menu keys (hard keys), and menu status LED all interface to the EXP through a general purpose programmable keyboard and display controller IC on the A10 Front Panel Control board. The keyboard function of this IC handles the touch matrix and hard keys. The display function drives the menu LED light bars.

The A9 Touch Panel assembly—is comprised of infrared LEDs that produce a matrix of light beams. When you touch a particular touch zone on the display, the light beams are interrupted by your finger. The touch panel is scanned continuously until such an interruption is detected. When such an interruption is detected, or a key is pressed, that scan is complete, and the display controller asserts the respective interrupt line. During this time, the interrupt is active and no new data is written into the sensor RAM from the touch panel or hard keys, even though the hardware continues to scan; therefore, the data will remain stable in the sensor RAM while the microprocessor is in the process of reading this data.

Only one infrared LED is turned on at a time, and only the phototransistor directly opposite is selected to receive light. This prevents any crosstalk between emitter/detector pairs.

The A10 Front Panel Control board—generates the 6-bit address bus that selects an infrared LED and its corresponding phototransistor on the A9 Touch Panel board.

The A11 Front Panel Button board—is comprised of the major menu LED light bars, which the display refresh register output of the keyboard and display controller IC drives. Internally, the light bars are display RAM organized in an 8-bit by 8-bit matrix. This display RAM is scanned column by column (automatically); lighting the appropriate LED bar(s) when a high bit is encountered. A latch, controlled by the EXP, drives the coarse/fine LEDs. The **coarse/fine** selections are sensed on the A9 Touch Panel board.

ManualsPlus.com

A12 Rear Panel Assembly

The A12 Rear Panel assembly links the DSA to other devices. This assembly contains connectors for the following:

- one GPIB port
- one RS-232-C port
- one PRINTER Port (Centronix style)

The A12 Rear Panel assembly is controlled from the A14 Input/Output (I/O) board through a 40-wire cable. This cable contains the following:

- 8-bit bidirectional data bus
- four-bit address bus
- interrupt lines (4)
- GPIB DMA request and grant lines
- device control lines (4)
- assorted power supply and ground lines

See Figure 4-9 for a block diagram of this assembly.

The GPIB port—drives the GPIB controller directly. The GPIB controller determines if the microprocessor is attempting a read or write. The interrupt controllers in the A17 Main Processor board monitor this interrupt line and signal the microprocessor to service the GPIB controller if an interrupt occurs. The GPIB controller requires the following:

- receiver section of the GPIB controller has a byte of data from the GPIB bus that the microprocessor must to read
- transmitter section register is empty and is ready to receive another byte of data
- microprocessor notification if the status of the GPIB bus or the GPIB controller has changed

On the other side of the GPIB controller is another bus system. This other bus system includes an 8-bit data bus which accesses a directional GPIB data buffer; and an eight-bit control bus which accesses a GPIB control driver. The GPIB bus is connected to the opposite side of the buffer and control driver. These two devices are specially designed to be TTL signal-level compatible on the bus side of the buffer driver.

The state of three control signals from the GPIB controller are monitored and displayed on the rear panel of the DSA. These LEDs show the state of the GPIB controller, not the state of the GPIB.

Two other significant signals are GPIB REQ and GPIB GR. The DMA controller on the A17 Main Processor board uses these signals to communicate with the GPIB controller (if the DMAC IC is installed). The microprocessor can program the DMA to service either the receiver section or the transmitter section.

ManualsPlus.com

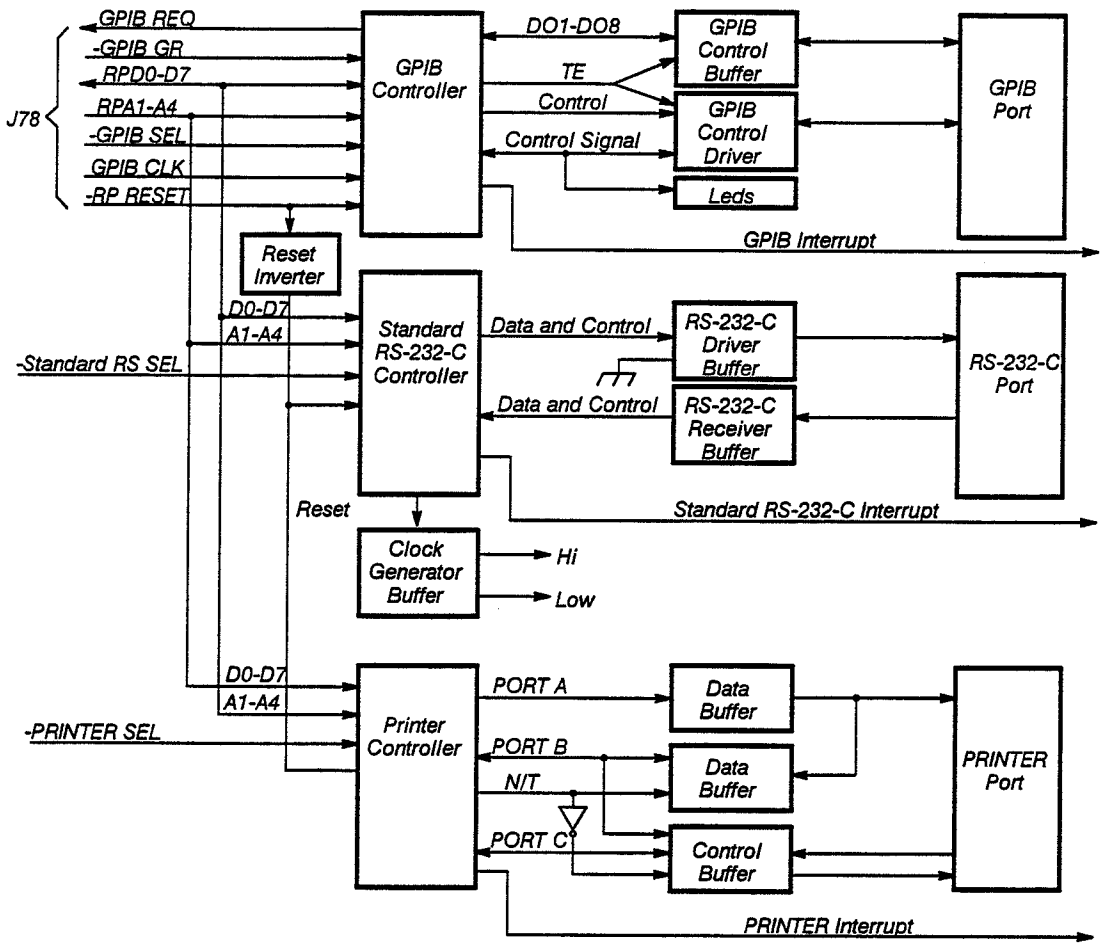

Figure 4-9 — A12 Rear Panel Assembly Block Diagram

The standard RS-232-C controller—is connected to the same data bus and address bus as the GPIB controller. The RPD0-D7 address lines transfer data to and from the microprocessor. The microprocessor uses the RPA1-A4 address lines to select individual registers in the standard RS-232-C controller. The STD RS SEL line becomes low when the microprocessor is attempting to communicate with the RS-232-C controller. (This line also drives the Chip Enable).

The microprocessor drives the RD and WR signals if the controller is to be read or written into. The standard RS-232-C controller sets the STD RS INTR (interrupt) line low to request service from the microprocessor. The microprocessor writes a byte into the driver buffer of the controller to transmit data on the RS-232-C bus. The microprocessor reads a byte from the receiver buffer to receive data from the RS-232-C bus. The microprocessor can also read the status of the controller. The RS-232-C controller translates the parallel data from the microprocessor to serial data for the RS-232-C bus, and also converts serial data from the RS-232-C bus to parallel data for the microprocessor.

ManualsPlus.com

The PRINTER port—is controlled by a programmable peripheral interface IC. This IC has all the control lines for to connecting the port to a microprocessor, plus two general purpose 8-bit ports and the control signals to use these two ports. The A12 Rear Panel Assembly Data bus and Address bus connect to the IC and have the same function as described for the GPIB and RS-232-C controllers. The microprocessor sets the PRINTER SEL line low when it is communicating with the interface. The RD and WR lines allow the microprocessor to either read or write to the registers in the programmable peripheral interface IC. The microprocessor must initialize this IC for Port A to be a strobed input port. Port C provides the control signals.

A13 Mother Board

Provides the interconnection for the microprocessor signals and the +5 V digital power between the following boards:

- A14 I/O board
- A15 MMU board
- A16 Display Controller board
- A17 Main Processor board
- A18 BB Memory board
- A19 Digitizer CPU board
- A20 Digitizer I/O board

ManualsPlus.com

A14 Input/Output (I/O) Board

The A14 I/O board consists of the following:

- data buffers
- timer configuration circuitry
- real time clock
- serial data interface (SDI)
- temp/tone readback buffer
- tone generator

The A14 I/O board is an interface between the EXP and communications ports (for example, RS-232-C and GPIB), devices on the A9, A10, A11 Front Panel circuit boards, the A12 Rear Panel assembly, and the Plug-ins. The EXP reads and writes to these I/O devices and the communication ports at specific I/O addresses. These I/O addresses are decoded to produce device select signals which enable the addressed device. Each I/O device is located on I/O address boundaries of at least 100_{hex}.

The lower eight bits of the Executive data bus transmit data to and from the various I/O devices and to read their statuses. Note that only one I/O device can be accessed at a time.

When the DMA controller is installed on the A17 Main Processor board, the A14 I/O board alters how it handles GPIB operations.

See Figure 4-10 for a block diagram of this board.

The I/O data buffer—buffers the lower eight bits of the Executive data bus from P105. The output of the I/O data bus drives data to six different on-board devices, including:

- I/O delayed data buffer
- rear panel data buffer
- front panel data buffer
- tone generator
- tone/temp readback buffer
- timer configuration circuitry

The I/O delayed data buffer—interfaces between the I/O data bus and the Write Delayed data bus.

The timer configuration circuitry—is comprised of a latch and three two-input data multiplexers built with discrete gates. When the data on the I/O data bus is latched, some of the latched bits individually configure counters 1 and 2; allowing the timer to accept different inputs for different system tasks. The operating system uses Counter 0 as a real-time clock based on the 2 MHz CLK input from the clock generator; which is always on.

ManualsPlus.com

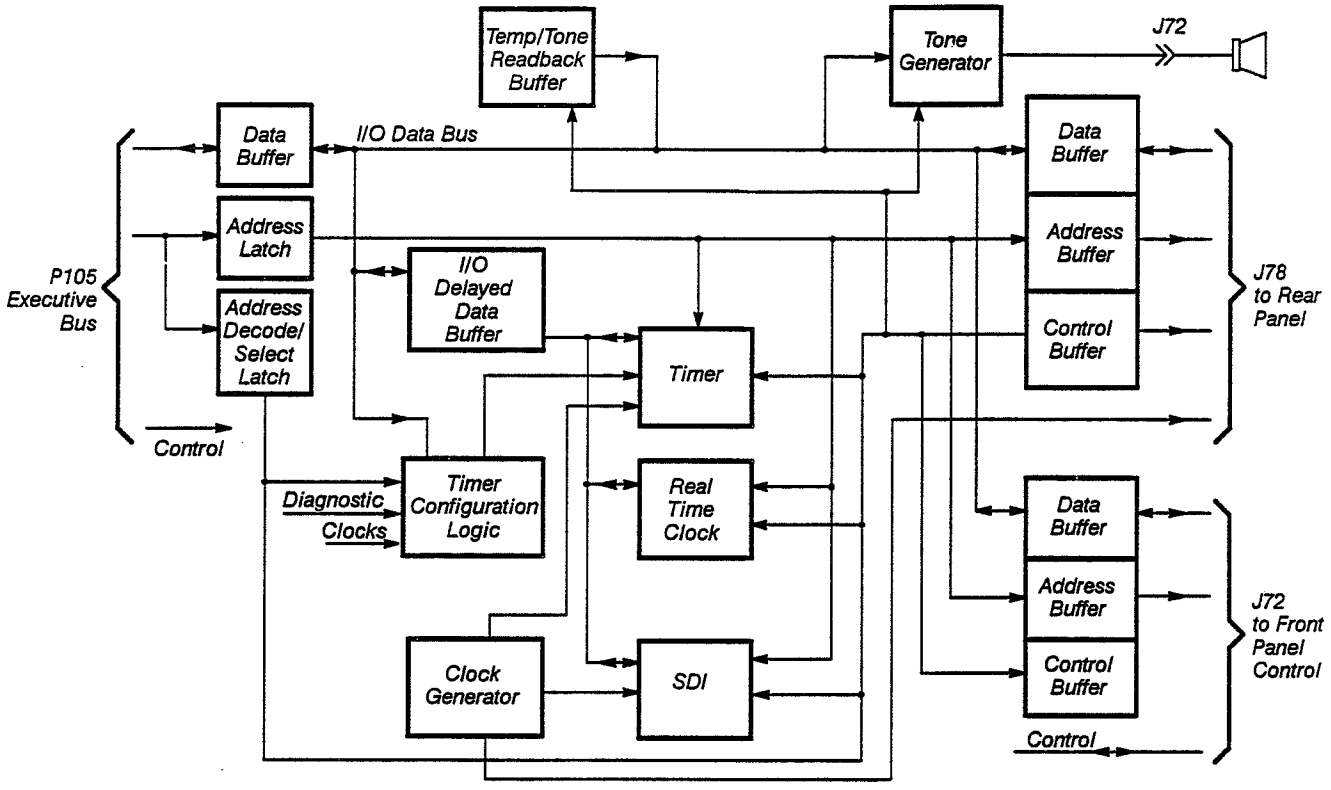

Figure 4-10 *— A14 I/O Board Block Diagram*

The real time clock—and its oscillator circuitry maintains the current time of day. The EXP sets and reads the real time clock.

The serial data interface (SDI)—is a custom IC that interfaces the EXP with the three plug-in compartments and both front panel knobs. The EXP controls this IC, and this IC interrupts the EXP when a device requires service.

The temp/tone generator—is based on a 555 timer; with a special current driver to set the timer's frequency. The timer outputs a square wave. The frequency of the square wave is inversely proportional to the digital value written to the temp/tone DAC. Thus, if a zero value is input into the DAC, the temp/tone generator produces the highest tone.

The temp/tone readback buffer—is an eight-line buffer connected to the I/O data bus, and the EXP uses this buffer to monitor the temp/tone generator.

ManualsPlus.com

A15 Memory Management Unit (MMU) Board

The A15 MMU board consists of the following:

- MMU gate array
- status and mode register (SMR)
- display interface
- Digitizer interface
- Executive processor interface

The A15 MMU board coordinates communications among the following three DSA subsystems:

- Display
- Digitizer
- Executive

The MMU gate array controls each interface with a different set of handshaking and buffer control lines. This board also contains buffers for each interface and two banks of DRAMS for waveform memory, address decode/select circuits, and integrated diagnostic control circuitry. To perform transfers, the EXP sets bits in a control register called the status and mode register (SMR). It must also load addresses and byte count information into either the sequential address generator (SAG) or the random address generator (RAG), which reside within the MMU.

See Figure 4-11 for a block diagram of this board.

The MMU gate array—controls all data transfers to and from waveform memory. The MMU gate array controls high-speed transfers of waveform data and communication messages between waveform memory and the three subsystem interfaces (Display, Digitizer and Executive processors). A set of handshaking lines, designed to the DMA facilities of each particular subsystem, coordinates each subsystem interface.

Through the status and mode register (SMR)—the EXP controls the MMU gate array; which is located at the EXPs I/O address, 1860_{hex}. Upon power-on, the EXP must initialize the SMR to enable transfers between waveform memory and the Display subsystem (bits 0 and 1), and the Digitizer subsystem (bits 5 and 6). When set, bit 7 allows the EXP to access the normally inaccessible registers, which are associated with the RAG, SAG and refresh counter.

Through the Display interface—data is transferred to and from the display through the A16 Display Controller board on a 16-bit data bus (Y0-Y15). These data transfers use the SAG to specify the destination or source addresses in waveform memory. Data is buffered with the bi-directional Display data buffers for even and odd bank waveform memory accesses.

ManualsPlus.com

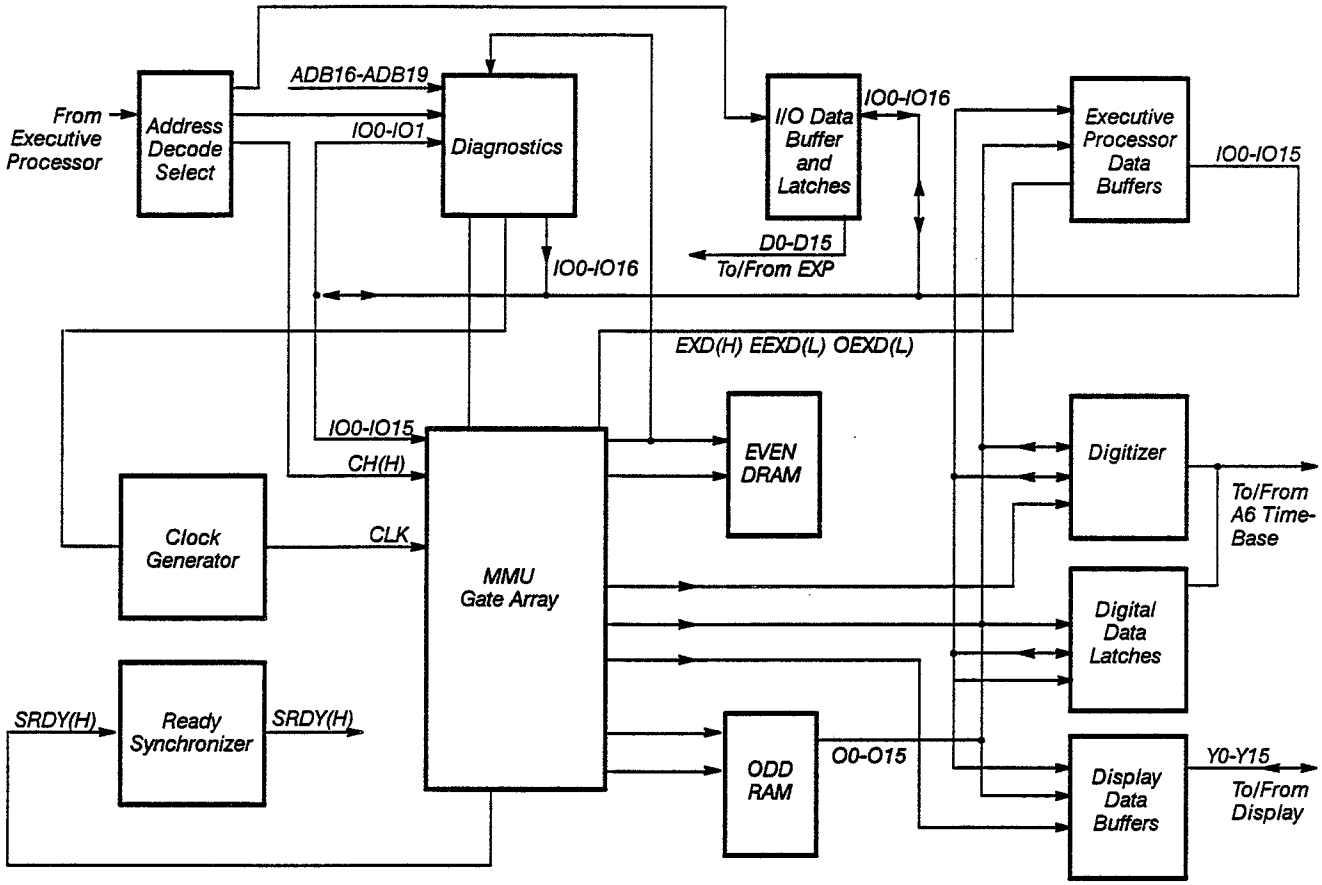

Figure 4-11 — A15 MMU Board Block Diagram

Through the Digitizer interface—data is transferred to and from the Digitizer processor on a 20-line multiplexed address/data bus, which dedicated handshaking lines coordinate. For transfers to waveform memory, the Digitizer processor sends a 20-bit address, then a 16-bit data word. During transfers from waveform memory to the Digitizer processor, only 16-bit data words are sent (while the MMU gate array's SAG provides the addressing for waveform memory).

This interface also consists of address, data, and status/control inputs, EXP interrupt outputs, and a data ready output.

The Executive processor interface—performs the following two main functions:

- provides the EXP access to waveform memory for passing subsystem messages and manipulation of waveform record data
- provides access to the status mode register (SMR) and the diagnostic facilities; allowing the EXP to coordinate system operation

ManualsPlus.com

A16 Display Controller Board

The A16 Display Controller board is comprised of hardware and firmware, which allow the Executive processor to present trace and other displays quickly and accurately. The hardware consists of the following:

- Display IC
- microprocessor
- bit map RAM
- Display RAM

The Display RAM, whose description follows, is the only hardware that configures displays. The firmware places all display elements are placed into the bit map.

See Figure 4-12 for a block diagram of this board.

The Display IC—consists of the following three functional circuits.

- CRT controller
- video memory interface
- compressor circuit

The CRT controller is implemented with a VLSI IC. The basic function of the CRT controller is to produce VIDEO and SYNC signals that indicate to the CRT where to position video information. The controller is virtually automatic in operation and invisible to the firmware programmer, with the exception of several internal registers that must be initialized at power-on.

The video memory interface is where the hardware recognizes and displays specific data structures, while the raster-scan displays the contents of the bit map. During the refresh of the screen, the hardware acquires bit map data and combines it with display data; yielding a final color index.

The compressor circuit provides 512 pairs of data points to the display. The A15 MMU board always provides 512 groups of data points, comprised from a possible 32,768 data points, to the compressor circuit. Hence, the name compressor, since the compressor reduces its groups of input data points to pairs of data points.

The microprocessor—transforms the entire Display subsystem into an intelligent peripheral dedicated to operating the display. The firmware that controls the Display subsystem executes from ROM in the microprocessor's address space. The clock for this microprocessor operates at a frequency of 8 MHz.

The bit map RAM—consists of 196,608 bytes of RAM, divided into three bit planes of 65,536 bytes each. Each bit in a plane represents a single pixel of the display. Setting the representative pixel bit in each of the planes controls the color of the pixel.

ManualsPlus.com

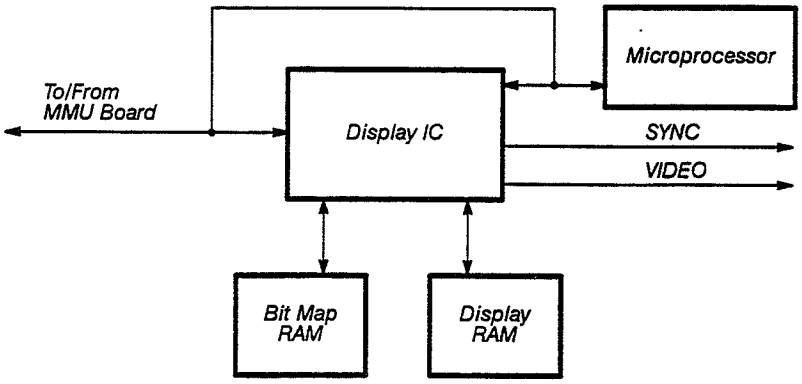

Figure 4-12 —A16 Display Controller Board Block Diagram

The Display RAM—consists of 65,536 bytes. These bytes contain minimum/maximum pairs of values, along with color index information, and overrange/underrange settings.

ManualsPlus.com

A17 Main Processor Board

The A17 Main Processor board consists of the:

- Executive processor (EXP)
- numeric co-processor circuitry
- bus controller circuitry
- reset circuitry
- wait state circuitry
- EPROMS
- interrupt controllers
- DMA

See Figure 4-13 for a block diagram of this board.

The Executive processor (EXP)—executes firmware routines stored in EPROMs located on the A17 Main Processor board and the A18 BB Memory board to effectively control the operation of the DSA. When power is first applied to the DSA, the EXP executes local and system diagnostic tests, which are located in the EPROMs on the A18 BB Memory board.

The EXP performs these functions with three main circuits:

- the clock generator generates the timing signals and synchronized reset signals for the microprocessor
- the microprocessor reads and writes data, generates addresses for I/O and memory devices, and also generates status signals for the bus controller
- the bus controller interprets the microprocessor's status signals and generates the necessary bus control signals for the system bus

The numeric co-processor circuitry—is a high-speed floating-point processor that executes instructions in parallel with the EXP. The EXP programs and controls the numeric co-processor as an I/O device at addresses $0F8_{hex}$ to $0FF_{hex}$.

Address decoders, address latches, and memory data buffers is the support circuits for input/output operations.

The bus controller circuitry—consists of a data buffer, an address buffer, and a control buffer that provide command and control signals for the microprocessor and the three Executive busses. The Executive busses consist of the following:

- **The system data bus**—is a bidirectional bus. It allows the microprocessor to fetch instructions from memory, and also to write data to memory and read data from memory.
- **The system address bus**—contains the address of a device when the microprocessor is requesting access to that device. Once the microprocessor has access, the addressed device can then respond to the microprocessor with data or instructions.

ManualsPlus.com

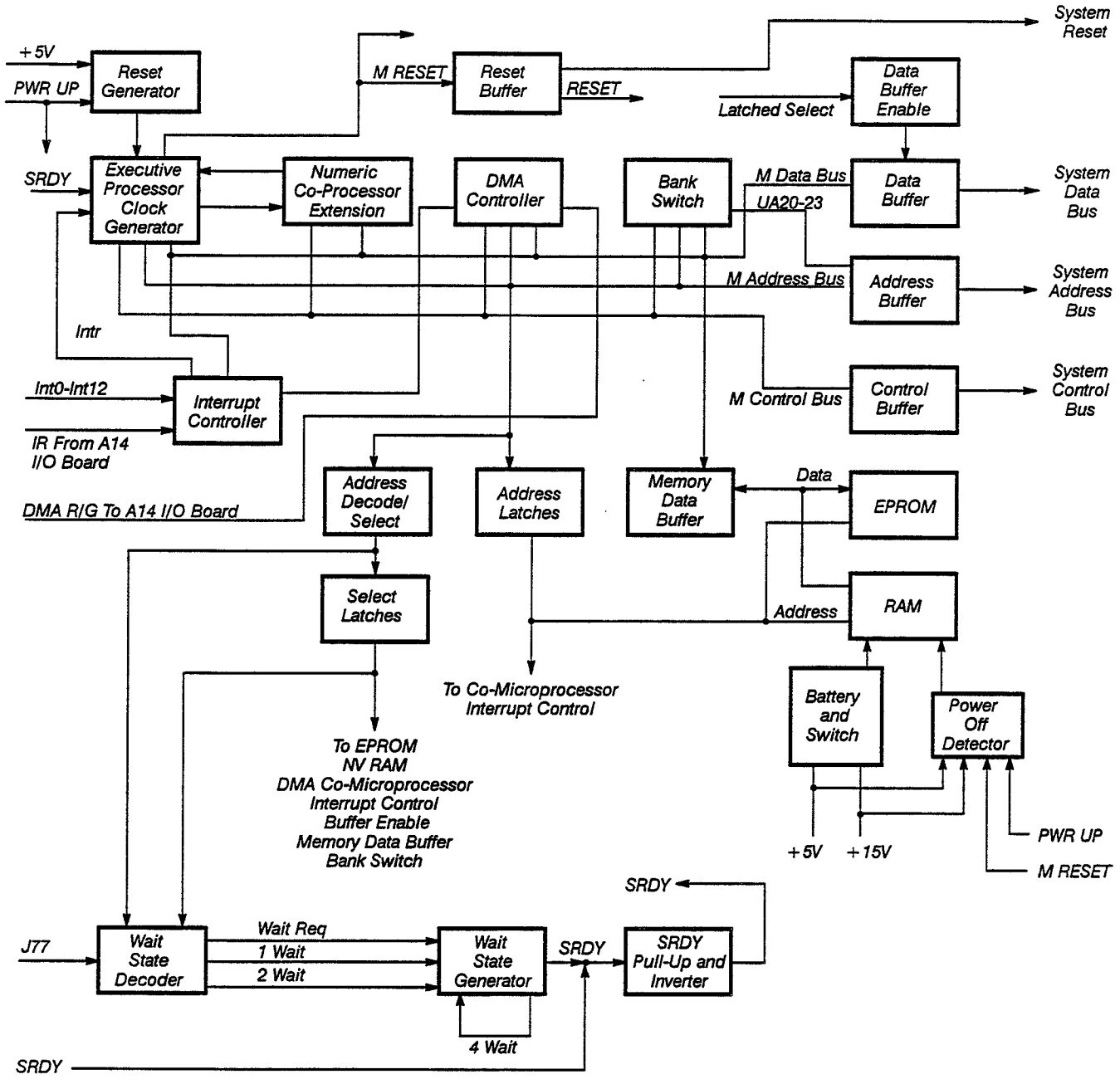

Figure 4-13 — A17 Main Processor Board Block Diagram

- **The system control bus**—contains control signals sent by the microprocessor. These control signals are sent to the devices that are addressed by the microprocessor, so that the devices respond at the proper moment in the bus cycle.

The reset circuitry—generates the synchronized READY(L) and RESET control signals.

ManualsPlus.com

The wait state circuitry—extends the bus cycle so that slower devices have sufficient time to transmit data.

The EPROM—contains the operating system code and also some diagnostics code.

The interrupt controllers—constantly monitor the EXPs interrupt lines to ensure that the highest priority interrupt gets serviced first. The Interrupt controllers provide the ability to assign priority levels to all the system's interrupt lines, and conversely, to ignore (mask) any of the interrupt lines as well.

The power-down circuitry—consists of the power-down detector and the battery and switch circuit. This circuitry disables the nonvolatile RAM (NV RAM) and provides battery-backup power when it detects the power supplies failing, an active MRESET signal, or PWR UP false. During normal power supply operation, PWR UP is high, MRESET is low, and after a one second time delay starts, the NV RAM is enabled.

A18 BB Memory Board

The A18 (Battery Back-up) BB Memory Board provides the EXP with system RAM (SRAM) and EPROM for most operations. Support circuitry for the memories and diagnostic circuitry for troubleshooting are located on-board. The A17 Main Processor board (specifically the Executive processor or the DMA controller) initiates all accesses to SRAM or EPROMs. See the discussion of the A17 Main Processor board for bus cycle timing information.

The A18 BB Memory board consists of the following:

- address latches
- address decode and memory select circuitry
- EPROM and system ROM
- memory data buffers
- memory configuration readback
- optional waveform storage RAM and battery backup

See Figure 4-14 for a block diagram of this board.

Address latches—buffer and hold the Executive address lines for the EPROMs, SRAMs and other on-board devices.

Address decode and memory select circuitry—Programmable Array Logic (PAL) decode the address lines to produce five RAM select signals (DCS 4-8) and four EPROM select signals, (DCS 0-3). DCS 8 enables the SRAM. Each EPROM select line is latched, along with the four waveform storage RAM select lines. The

ManualsPlus.com

latch outputs are always enabled. While latch enable EALE is high, the latch outputs are responsive to changes on the inputs.

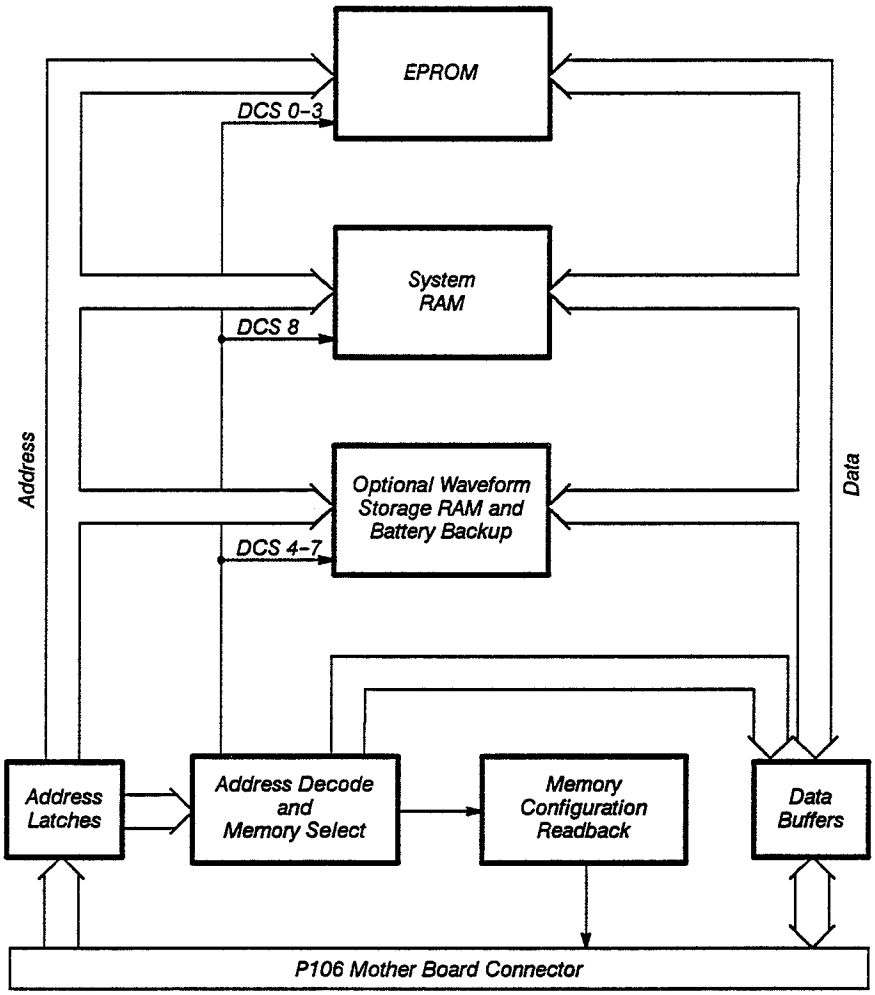

***Figure 4-14** — A18 BB Memory Board Block Diagram*

The EXP on the A17 Main Processor board generates the address line inputs A14-A19. Lines A20-A23 are memory bank-select lines, which are encoded by circuitry on the A17 Main Processor board.

The memory select circuitry provides latched memory select lines and an enable signal for the Memory data buffers.

EPROM and System RAM—contain most of the operating system code and diagnostics code for the EXP. All the memories share the latched address bus. The system RAM (SRAM) stores miscellaneous constants that the operating system code produces and uses. The memories are organized into high and low-byte pairs. The address decode PAL generates latched chip-select signals. A separate latched chip-select signal selects each of these pairs. The data lines to the Executive data bus are buffered by the memory data buffers.

ManualsPlus.com

Memory data buffers—drive data between the memories and Executive data bus. Both data buffers are enabled when all of its inputs are high.

Memory configuration readback—allows the diagnostics to read the position of the memory configuration straps and the bank address lines. The EXP does an I/O read at address 8040*hex* to read the information on the lower eight data lines.

Optional waveform storage RAM and battery back-up—provides standby power to the waveform storage RAM during any powered-off periods of the DSA.

A19 Digitizer CPU Board

The A19 Digitizer (Central Processing Unit) CPU board, A20 Digitizer I/O board, and A8 Waveform Processor (Signal Processor) board form a system which manages the data acquisition hardware, communicates with the A17 Main Processor board, interprets the front panel settings, and executes diagnostic firmware.

The A19 Digitizer CPU board consists of the following:

- CPU
- system ROM
- system RAM
- selectable RAM/ROM option
- NV RAM
- bus conversion circuitry
- status/option readback

See Figure 4-15 for a block diagram of this board.

CPU—(that is, the Digitizer processor) controls the operations of the A19 Digitizer I/O board, A20 Digitizer CPU board, and the A8 Waveform Processor (Signal Processor) board. The CPU operates at 8 MHz.

System ROM—The instructions are sent to the Digitizer processor through the data buffers during an instruction fetch cycle. The UCS (Upper Chip Select) signal, which is asserted during an instruction fetch cycle, enables the selected ROMs and data buffers.

System RAM—is accessed by the Digitizer processor through the data buffers. The data buffers are enabled when the LCS (Lower Chip Select) signal is asserted. The LCS signal also enables the RAMs.

ManualsPlus.com

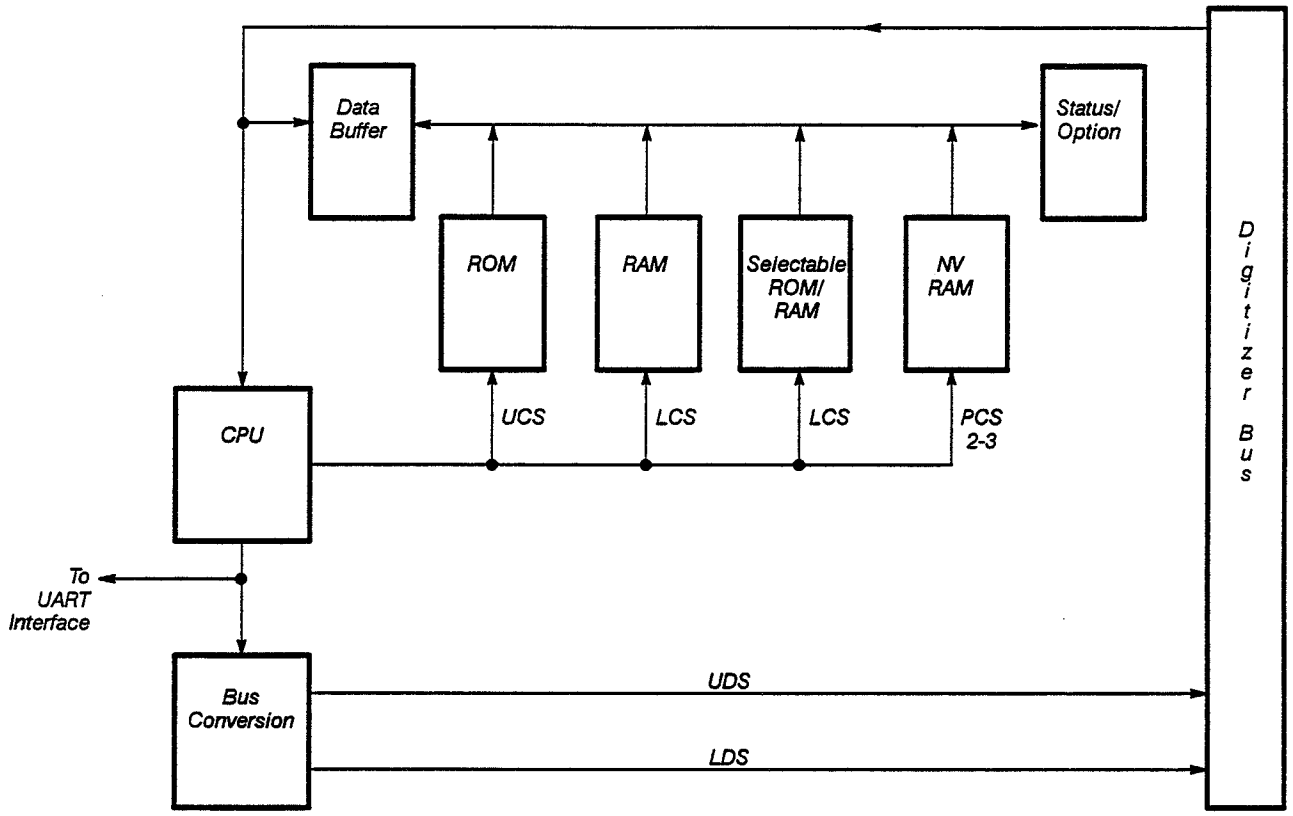

Figure 4-15 — A19 Digitizer CPU Board Block Diagram

Selectable ROM/RAM option—is a 64 Kbyte block of memory. The ROM is selected when this block of memory is storing the TriStar signal processor program memory, and the RAM is selected when additional system RAM is needed. Two zero ohm resistors determine if ROM or RAM is selected. The two resistors are initially set to select the ROMs.

NV RAM—is accessed by the Digitizer processor. The data buffer and the NV RAM are enabled when either PCS2 or PCS3 is asserted.

The NV RAM can store or recall the entire NV RAM internal RAM array to its internal EEPROM array.

BUS Conversion Circuitry—transforms the Digitizer CPU bus interface signals, to a new set of bus interface signals called the Digitizer bus. The Digitizer bus interfaces the Digitizer processor to the rest of the Digitizer subsystem.

Both the Lower and the Upper Data Strobes (LDS and UDS, respectively) are asserted during a word access, but only one of the data strobes is asserted during a byte access. When the data strobes are active, data is guaranteed to be valid during the write cycle.

The Digitizer data buffers are enabled when the processor accesses devices not on the A19 Digitizer CPU board. Each data transfer requires that a DTACK signal is asserted from the accessed device.

ManualsPlus.com

Status/Option readback—allows the processor to read the status/option jumpers so that a selected section of code can be executed or skipped. Status/Option data is placed on the data bus when the processor performs a read cycle.

A20 Digitizer I/O Board

The A20 Digitizer I/O board links the Digitizer subsystem to the Executive subsystem. The arbitration between these two subsystems is accomplished through the A20 Digitizer I/O board and the A15 MMU board.

The Digitizer I/O board consists of the following:

- Digitizer to MMU interface
- MMU to Digitizer interface
- MMU control

See Figure 4-16 for a block diagram of this board.

Digitizer to MMU interface—Data is transferred from the A20 Digitizer I/O board to the A15 MMU board through the Digitizer to MMU interface. The A20 Digitizer I/O board asserts a control signal to the A15 MMU board to request waveform data or a message transfer. This signal remains asserted until the A15 MMU board responds to the MMU control.

This response causes three events to occur. First, the address lines to the A15 MMU board are enabled. Next, the data to the A15 MMU board are latched and enabled to the MMU data bus. Finally, the DTACK control signal is asserted to inform the Digitizer processor that the data transfer will be performed.

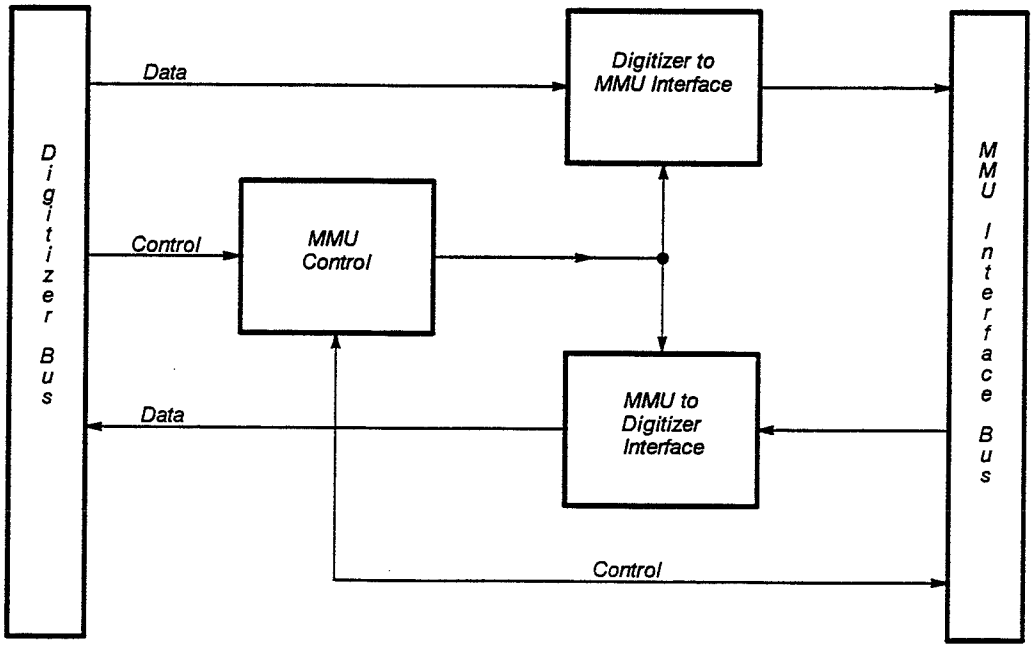

Figure 4-16 — A20 Digitizer I/O Board Block Diagram

ManualsPlus.com

MMU to Digitizer interface—The A15 MMU board can send messages to the A20 Digitizer I/O board through the MMU to Digitizer Interface. The message from the A15 MMU board is then latched, and at the same time, a DMA request to the Digitizer processor is asserted to request the Digitizer processor to fetch the message. After the fetching is completed, the MMU to Digitizer interface prepares to accept the next message.

MMU Control—The MMU Control receives and generates signals that control the flow of data from the Digitizer bus to the MMU interface bus, and from the MMU interface bus to the Digitizer bus.

A21 Mini Mother Board

The A21 Mini Mother board provides interconnection between the following boards:

- A19 Digitizer CPU
- A20 Digitizer I/O

ManualsPlus.com

A24 CRT Driver Board

The A24 CRT Driver board consists of the following:

- horizontal sweep circuitry
- vertical sweep circuitry
- high and grid voltage generator circuitry
- z-axis amplifier
- intensity circuitry

The A24 CRT Driver board circuitry drives the raster scan CRT. The VIDEO and SYNC signals from the A16 Display Controller board are used in generating the Z-Axis, sweep signals, and grid-bias voltages for the CRT.

See Figure 4-17 for a block diagram of this board.

The horizontal sweep circuitry—generates the sweep current for the horizontal deflection yoke. The horizontal driver includes a voltage-controlled oscillator, a voltage ramp generator, a high-gain amplifier, and a flyback generator. These components provide sweep synchronization, horizontal deflection, and linearity.

The horizontal adjustments; Horiz Size, Horiz Lin, Horiz Hold, and Horiz Pos, are provided so that you can optimize the display appearance.

The vertical sweep circuitry—produces a deflection current that sweeps the video beam from the bottom to the top of the CRT. This circuit also produces a flyback signal to the flyback transformer that is in parallel with the deflection yoke.

The vertical adjustments, Vert Size and Vert Hold, set the vertical size and position of the display.

The high and grid-voltage generator circuitry—consists of the flyback transformer from the flyback waveform, which generates the 20.5 kV CRT anode potential and other bias voltages. This transformer is in parallel with the yokes and also supplies some of the sweep current for the yoke winding.

The HV Reg adjustment maintains the proper display size throughout the various intensity levels.

The Z-axis amplifier—the three cathodes (R, G, B) of the CRT are driven by three identical high speed video amplifiers. The cut-off point (the point at which a certain color becomes invisible) is controlled by the Red, Green, and Blue Cutoff adjustments. The gain for each amplifier is set by the Red, Green, and Blue Gain adjustments.

Each of the three colors can be programmed to display sixteen different levels. This yields a possible 4096 colors, of which eight can be displayed on the screen at any time.

ManualsPlus.com

The intensity circuitry—sets the intensity of the CRT image. The intensity is proportional to the output of a DAC. The serial input MON DATA sets this output, and the MON CLK clocks this output.

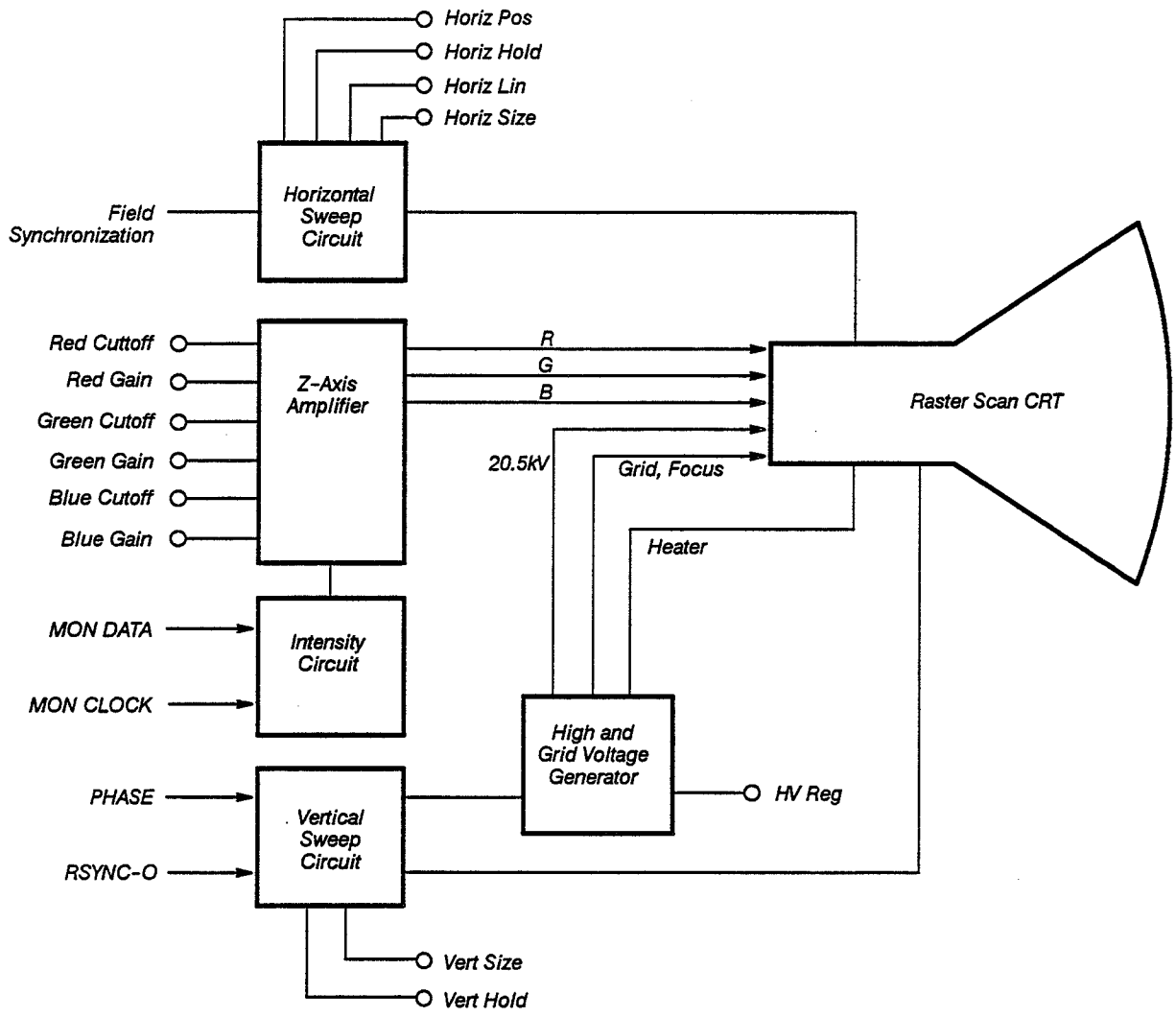

Figure 4-17 — *A24 CRT Driver Board Block Diagram*

ManualsPlus.com

A25 Degauss Board

At each power-on, the A25 Degauss board removes magnetic fields (induced by magnetic sources) from the color steel aperture grill.

The A25 Degauss board produces an exponentially-decaying sine wave with a frequency of approximately 5 kHz. This waveform is applied to the degauss coils that are located on both sides of the CRT. The decayed oscillation through the coils causes a magnetic field to be induced in the CRTs steel aperture grill. As the steel is driven around its hysteresis curve this magnetic field saturates the steel and then brings the stored magnetic field down to zero.

A26 Geometry Board

The A26 Geometry board generates signals to drive amplifiers that statistically and dynamically control the CRT beam deflection position and distortion. The A26 Geometry board contains the following:

- field ramp generator
- pin-cushion correction
- phase correction

See Figure 4-18 for a block diagram of this board.

The field ramp generator—generates a ramp waveform that all waveforms on the A26 Geometry board are derived from.

The pin-cushion correction circuitry—creates a parabola waveform (FPARA) that minimizes raster pin-cushion distortion. Pin-cushion distortion is a visual distortion of the display image.

The pin-cushion correction circuitry provides the following manual adjustments for optimizing the display image:

- Parabola Left—corrects the left side of the display amplitude
- Parabola Right—corrects the right side of the display amplitude
- Apex Point—moves the point of correction horizontally across the screen
- Reference Amplitude—controls the vertical size of the display
- Parabola Amplitude—controls the amplitude of the pin-cushion correction parabola

The phase correction circuitry—dynamically and statically controls the start of the raster sweep. The phase correction circuitry also provides the following adjustments for optimizing the display image:

- Phase Magnitude—controls the horizontal tilt of the display
- Phase Offset—controls the fine vertical position of the display

ManualsPlus.com

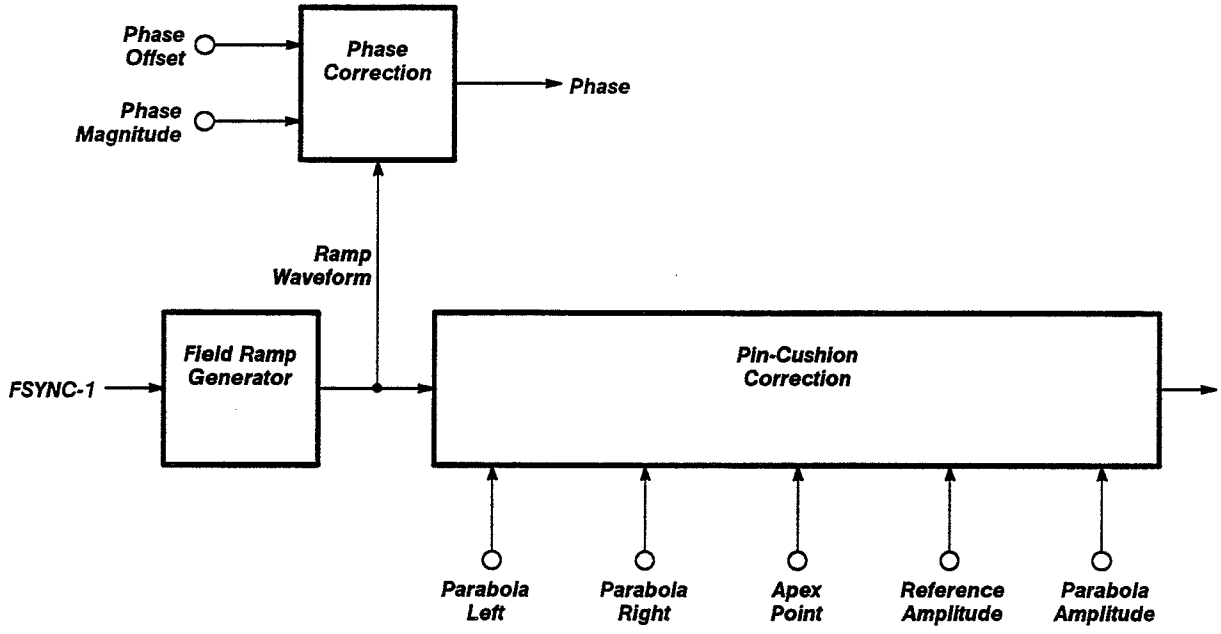

Figure 4-18 — A26 Geometry Board Block Diagram

A27 CRT Socket Board

The A27 CRT Socket board is the interface between the CRT and the A24 CRT Driver board. The A27 CRT Socket board contains the following manual adjustment for optimizing the display image:

- Convergence—controls the vertical convergence of the red, blue, and green grid patterns
- Grid—controls the brightness of the background color
- Focus—controls the focusing of the display

ManualsPlus.com

Replaceable Parts

This section contains a list of the components that are replaceable for the DSA 601 and DSA 602 Digitizing Signal Analyzers. As described below, use this list to identify and order replacement parts.

Parts Ordering Information

Replacement parts are available from or through your local Tektronix, Inc. service center or representative.

Changes to Tektronix instruments are sometimes made to accommodate improved components as they become available and to give you the benefit of the latest circuit improvements. Therefore, when ordering parts, it is important to include the following information in your order:

- Part number
- Instrument type or model number
- Instrument serial number
- Instrument modification number, if applicable

If a part you order has been replaced with a different or improved part, your local Tektronix service center or representative will contact you concerning any change in the part number.

Change information, if any, is located at the rear of this manual.

Module Replacement

The DSA 601 and DSA 602 Digitizing Signal Analyzers are serviced by module replacement so there are three options you should consider:

- **Module Exchange.** In some cases you may exchange your module for a remanufactured module. These modules cost significantly less than new modules and meet the same factory specifications. For more information about the module exchange program, call 1-800-TEKWIDE, ext. BVJ5799.
- **Module Repair.** You may ship your module to us for repair, after which we will return it to you.
- **New Modules.** You may purchase new replacement modules in the same way as other replacement parts.

ManualsPlus.com

Using the Replaceable Parts List

The tabular information in the Replaceable Parts List is arranged for quick retrieval. Understanding the structure and features of the list will help you find the all the information you need for ordering replacement parts.

Item Names

In the Replaceable Parts List, an Item Name is separated from the description by a colon (:). Because of space limitations, an Item Name may sometimes appear as incomplete. For further Item Name identification, U.S. Federal Cataloging Handbook H6-1 can be used where possible.

Indentation System

This parts list is indented to show the relationship between items. The following example is of the indentation system used in the Description column:

1 2 3 4 5 Name & Description

Assembly and/or Component
Attaching parts for Assembly and/or Component
(END ATTACHING PARTS)

Detail Part of Assembly and/or Component
Attaching parts for Detail Part
(END ATTACHING PARTS)

Parts of Detail Part
Attaching parts for Parts of Detail Part
(END ATTACHING PARTS)

Attaching parts always appear at the same indentation as the item it mounts, while the detail parts are indented to the right. Indented items are part of, and included with, the next higher indentation. Attaching parts must be purchased separately, unless otherwise specified.

Abbreviations

Abbreviations conform to American National Standards Institute (ANSI) standard Y1.1

ManualsPlus.com

CROSS INDEX - MFR. CODE NUMBER TO MANUFACTURER

Mfr. Code	Manufacturer	Address	City, State, Zip Code
00779	AMP INC	2800 FULLING MILL PO BOX 3608	HARRISBURG PA 17105
01536	TEXTRON INC CAMCAR DIV SEMS PRODUCTS UNIT	1818 CHRISTINA ST	ROCKFORD IL 61108
06383	PANDUIT CORP	17301 RIDGELAND	TINLEY PARK IL 07094-2917
11897	PLASTIGLIDE MFG CORP	2701 W EL SEGUNDO BLVD	HAWTHORNE CA 90250-3318
12327	FREEWAY CORP	9301 ALLEN DR	CLEVELAND OH 44125-4632
16428	COOPER BELDEN ELECTRONIC WIRE AND CA SUB OF COOPER INDUSTRIES INC	NW N ST	RICHMOND IN 47374
30010	BICC-VERO ELECTRONICS INC	40 LINDEMAN DR	TRUMBULL CT 06611-4739
46384	PENN ENGINEERING AND MFG CORP	OLD EASTON RD PO BOX 1000	DANBORO PA 18916
53387	MINNESOTA MINING AND MFG CO ELECTRONIC PRODUCTS DIV	3M CENTER	ST PAUL MN 55101-1428
70903	COOPER BELDEN ELECTRONICS WIRE AND C SUB OF COOPER INDUSTRIES INC	2000 S BATAVIA AVE	GENEVA IL 60134-3325
71400	BUSSMANN DIV OF COOPER INDUSTRIES INC	114 OLD STATE RD PO BOX 14460	ST LOUIS MO 63178
74868	AMPHENOL CORP R F CONNECTORS (OPNS)	1 KENNEDY AVE	DANBURY CT 06810-5803
75915	LITTELFUSE INC SUB TRACOR INC	800 E NORTHWEST HWY	DES PLAINES IL 60016-3049
78189	ILLINOIS TOOL WORKS INC SHAKEPROOF DIV	ST CHARLES ROAD	ELGIN IL 60120
80009	TEKTRONIX INC	14150 SW KARL BRAUN DR PO BOX 500	BEAVERTON OR 97077-0001
83486	ELCO INDUSTRIES INC	1101 SAMUELSON RD	ROCKFORD IL 61101
83553	ASSOCIATED SPRING BARNES GROUP INC	15001 S BROADWAY P O BOX 231	GARDENA CA 90248-1819
93907	TEXTRON INC CAMCAR DIV	600 18TH AVE	ROCKFORD IL 61108-5181
96881	THOMSON INDUSTRIES INC	SHORE RD AT CHANNEL DR	PORT WAHSINGTON NY 11050
S3109	FELLER	ASA ADOLF AG STOTZWEID CH8810	HORGEN SWITZERLAND
S3629	SCHURTER AG H C/O PANEL COMPONENTS CORP	2015 SECOND STREET	BERKELEY CA 94170
TK0510	PANASONIC COMPANY DIV OF MATSUSHITA ELECTRIC CORP	ONE PANASONIC WAY	SECAUCUS NJ 07094
TK0858	STAUFFER SUPPLY CO (DIST)	810 SE SHERMAN	PORTLAND OR 97214
TK0861	H SCHURTER AG DIST PANEL COMPONENTS	2015 SECOND STREET	BERKELEY CA 94170
TK0935	MARQUARDT SWITCHES INC	67 ALBANY ST PO BOX 465	CAZENOVIA NY 13035-1219
TK0946	SAN-O INDUSTRIAL CORP	170 WILBUR PL	BAHEMIA LONG ISLAND NY 11716
TK1373	PATELEC-CEM (ITALY)	10156 TORINO	VAICENTALLO 62/45S ITALY
TK1543	CAMCAR/TEXTRON	600 18TH AVE	ROCKFORD IL 61108-5181
TK1546	DTM PRODUCTS INC	4725 NAUTILUS COURT S	BOULDER CO 80301
TK2038	MULTICOMP INC	3005 SW 154TH TERRACE #3	BEAVERTON OR 97006
TK6020	DAINICHI-NIPPON CABLES	NEW KOKUSAI BLDG 4-1 MARUNOUCHI 3-CHOME CHIYODA-KU	TOKYO 100 JAPAN

ManualsPlus.com

Fig. & Index No.	Tektronix Part No.	Serial/Assembly No. Effective	Dscont	Qty	12345 Name & Description	Mfr. Code	Mfr. Part No.
1-1	200-3350-00			1	COVER,CABINET:UPPER,ALUMINUM	80009	200-3350-00
-2	214-0603-02			4	.PIN ASSY,SECRG:W/SPRING WASHER	80009	214-0603-02
-3	386-1151-00			4	.CLAMP,RIM CLENC:SPG STL CD PL	83553	ORDER BY DESCR
-4	386-0227-00			4	.STOP,CLP,RIM CL:	80009	386-0227-00
-5	348-0875-00			1	FLIPSTAND,CAB.:	80009	348-0875-00
-6	200-3351-00			1	COVER,CABINET:LOWER,ALUMINUM	80009	200-3351-00
-7	214-0603-02			4	.PIN ASSY,SECRG:W/SPRING WASHER	80009	214-0603-02
-8	386-1151-00			4	.CLAMP,RIM CLENC:SPG STL CD PL	83553	ORDER BY DESCR
-9	386-0227-00			4	.STOP,CLP,RIM CL:	80009	386-0227-00
-10	348-0596-00			4	PAD,CAB.FOOT:0.69 X 0.255 X 0.06,PU	80009	348-0596-00
-11	348-0879-00			4	FOOT,CABINET:BOTTOM,BLUE,POLYCARBONATE	80009	348-0879-00
					(ATTACHING PARTS)		
-12	211-0734-00			4	SCREW,MACHINE:6-32 X 0.25,FLH,100 DEG,STL	83486	ORDER BY DESCR
					(END ATTACHING PARTS)		
-13	348-0980-00			4	SHIL GSKT,ELEK:FINGER TYPE,21.0 L	80009	348-0980-00
-14	426-2177-00			2	FRAME SECT,CAB.:RIGHT/LEFT,ALUMINUM	80009	426-2177-00
					(ATTACHING PARTS)		
-15	212-0681-00			4	SCREW,MACHINE:10-32 X 0.25,PNH,STL	83486	ORDER BY DESCR
-16	211-0734-00			3	SCREW,MACHINE:6-32 X 0.25,FLH,100 DEG,STL	83486	ORDER BY DESCR
					(END ATTACHING PARTS)		
-17	101-0116-00			2	TRIM,DECORATIVE:FRONT	80009	101-0116-00
					(ATTACHING PARTS)		
-18	212-0158-00			4	SCREW,MACHINE:8-32 X 0.375,PNH,STL	83486	ORDER BY DESCR
					(END ATTACHING PARTS)		
-19	200-2191-00			4	CAP,RETAINER:PLASTIC	80009	200-2191-00
-20	367-0248-01			2	HANDLE,CARRYING:16.341 L,W/CLIP	80009	367-0248-01
-21	101-0117-00			2	TRIM,DECORATIVE:REAR	80009	101-0117-00
					(ATTACHING PARTS)		
-22	212-0158-00			4	SCREW,MACHINE:8-32 X 0.375,PNH,STL	83486	ORDER BY DESCR
					(END ATTACHING PARTS)		

ManualsPlus.com

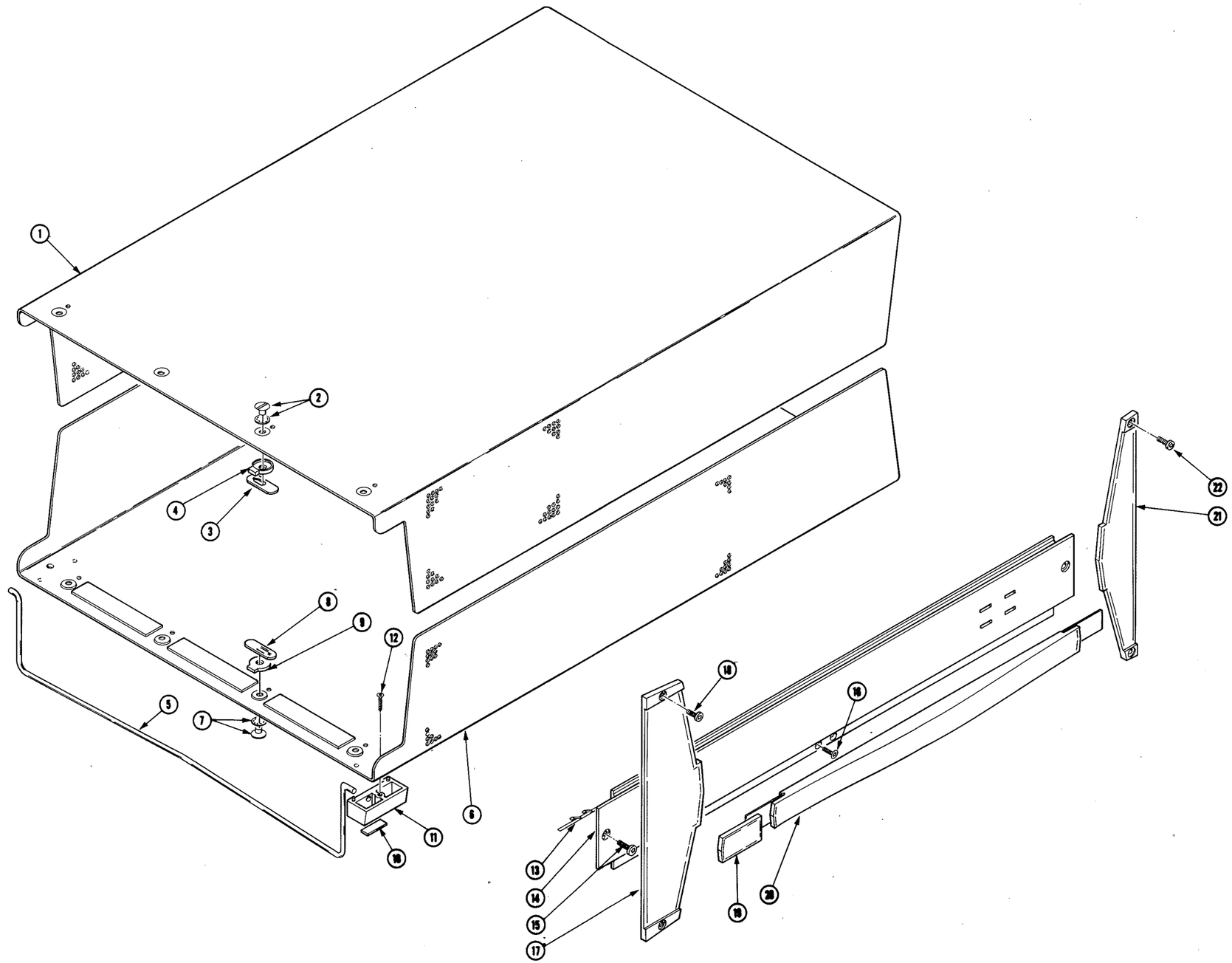

Fig. 1 Cabinet

ManualsPlus.com

Fig. 2 Front, Chassis, Rear

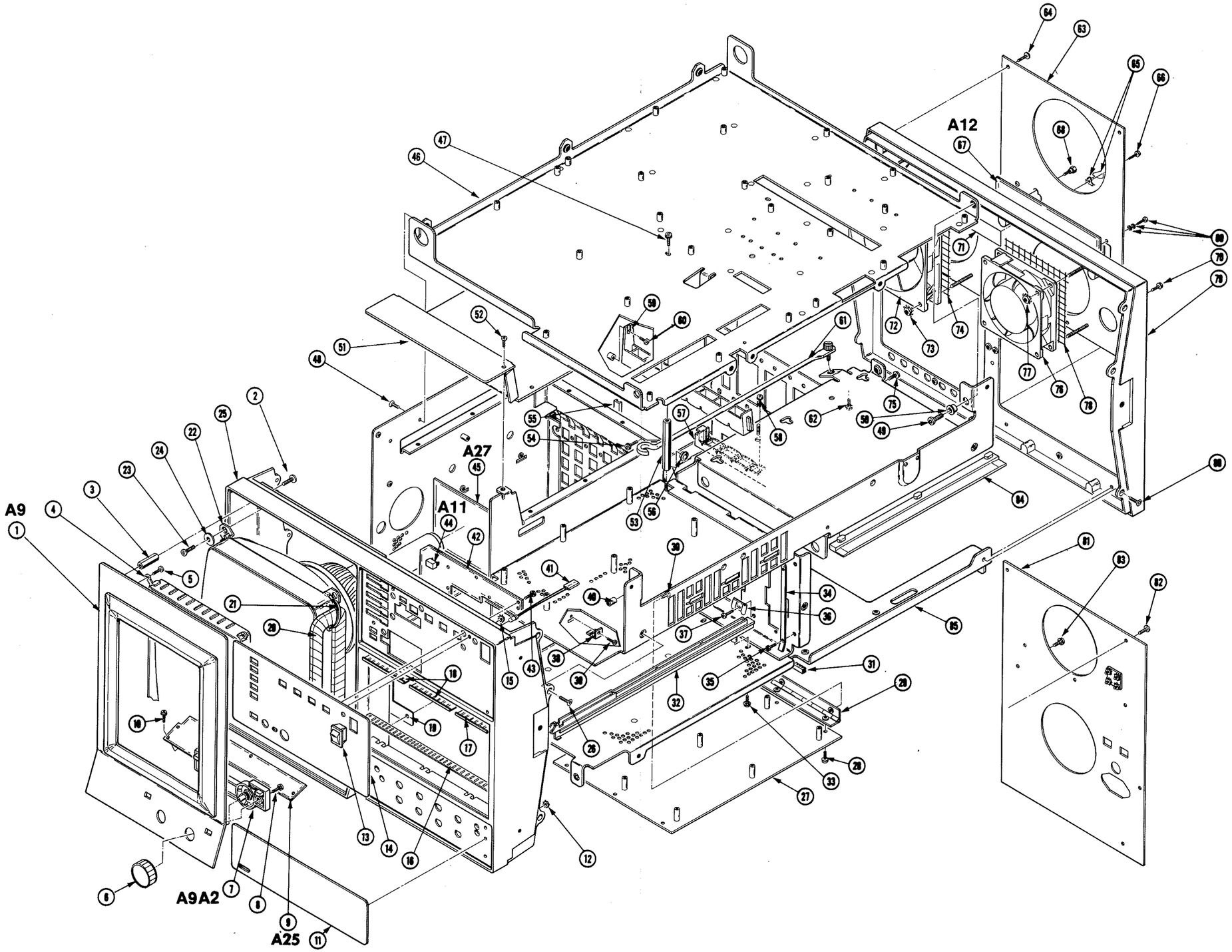

ManualsPlus.com

Fig. & Index No.	Tektronix Part No.	Serial/Assembly No. Effective	Dscont	Qty	12345 Name & Description	Mfr. Code	Mfr. Part No.
2-1	614-0818-00			1	PANEL SUBASSY:TOUCH PANEL	80009	614-0818-00
					(SEE A9, EXCHANGE ITEM)		
					(ATTACHING PARTS)		
-2	211-0721-00			4	SCREW,MACHINE:6-32 X 0.375,PNH,STL	83486	ORDER BY DESCR
					(END ATTACHING PARTS)		
					TOUCH PANEL ASSEMBLY INCLUDES:		
-3	129-1165-00			2	.SPCR,POST:1.9 L,W 6-32 THD BOTH END,A1,HEX	80009	129-1165-00
-4	386-5499-00			1	.DIFFUSER,LIGHT:PLASTIC,7.055 X 5.472	80009	386-5499-00
					(ATTACHING PARTS)		
-5	211-0372-00			4	.SCREW,MACHINE:4-40 X 0.312,PNH,STL	TK1543	B80-00020-003
					(END ATTACHING PARTS)		
-6	366-0582-00			2	.KNOB:ENCODER	TK1546	ORDER BY DESCR
-7	671-0036-00			1	.CIRCUIT BD ASSY:KNOB	80009	671-0036-00
					.(SEE A9A2)		
					(ATTACHING PARTS)		
-8	211-0409-00			2	.SCR,ASSEM WSHR:4-40 X 0.312,PNH,STL	93907	ORDER BY DESCR
					(END ATTACHING PARTS)		
-9	670-9829-00			1	CIRCUIT BD ASSY:DEGAUSS	80009	670-9829-00
					(SEE A25)		
					(ATTACHING PARTS)		
-10	211-0408-00			5	SCR,ASSEM WSHR:4-40 X 0.250,PNH,STL TORX	93907	ORDER BY DESCR
					(END ATTACHING PARTS)		
-11	333-3451-01			1	PANEL,FRONT:DSA601,LOWER	80009	333-3451-01
					(ATTACHING PARTS)		
-12	210-0586-00			4	NUT,PL,ASSEM WA:4-40 X 0.25,STL CD PL	78189	211-041800-00
					(END ATTACHING PARTS)		
-13	260-2349-00			1	SWITCH,ROCKER:SPST,30MA,12V	TK0935	1801.1152
-14	333-3414-00			1	PANEL,FRONT:UPPER,ALUMINUM	80009	333-3414-00
					(ATTACHING PARTS)		
-15	210-0586-00			4	NUT,PL,ASSEM WA:4-40 X 0.25,STL CD PL	78189	211-041800-00
					(END ATTACHING PARTS)		
-16	348-0878-00			1	SHLD GSKT,ELEK:SOLID TYPE,7.646 L	80009	348-0878-00
-17	348-1075-00			1	SHLD GSKT,ELEC:SOUND TYPE,1.66 L	80009	348-1075-00
-18	348-1076-00			2	SHLD GSKT,ELEC:SOLID TYPE,2.28 L	80009	348-1076-00
-19	344-0438-00			1	CLIP,ELEC:CRT GROUNDING,2.5 X 4.5	80009	344-0438-00
-20	108-1383-00			2	COIL,TUBE DEFL:FXD,DEGAUSS R<1.0 OHM	TK2038	108-1383-00
-21	346-0120-00			4	STRAP,TIEDOWN,E:5.5 L MIN,PLASTIC,WHITE	06383	SST1.5M
-22	154-0914-00			1	ELECTRON TUBE:CRT,P31	80009	154-0914-00
					(ATTACHING PARTS)		
-23	211-0721-00			4	SCREW,MACHINE:6-32 X 0.375,PNH,STL	83486	ORDER BY DESCR
-24	210-0949-00			4	WASHER,FLAT:0.141 ID X 0.5 OD X 0.062,BRS	12327	ORDER BY DESCR
					(END ATTACHING PARTS)		
-25	386-5495-01			1	SUBPANEL,FRONT:	80009	386-5495-01
					(ATTACHING PARTS)		
-26	211-0725-00			10	SCREW,MACHINE:6-32 X 0.375,FLH	01536	ORDER BY DESCR
					(END ATTACHING PARTS)		
-27	386-5752-00			1	PLATE,ECB MTG:ALUMINUM	80009	386-5752-00
					(ATTACHING PARTS)		
-28	211-0373-00			6	SCREW,MACHINE:4-40 X 0.25,PNH,STL	80009	211-0373-00
					(END ATTACHING PARTS)		
-29	214-1632-01			1	HINGE,BUTT:7.0 X 1.062,AL	80009	214-1632-01
					(ATTACHING PARTS)		
-30	211-0373-00			3	SCREW,MACHINE:4-40 X 0.25,PNH,STL	80009	211-0373-00
					(END ATTACHING PARTS)		
-31	255-0334-00			2	PLASTIC CHANNEL:12.75 X 0.175 X 0.155,NYLON	11897	122-37-2500
-32	351-0744-00			3	GUIDE,PLUG-IN:POLYAMIDE	80009	351-0744-00
					(ATTACHING PARTS)		
-33	211-0711-00			3	SCR,ASSEM WSHR:6-32 X 0.25,PNH,STL,TORX,T15	01536	ORDER BY DESCR
					(END ATTACHING PARTS)		
-34	131-0800-03			2	CONTACT,ELEC:PLUG-IN GND,BE NI HT TR	80009	131-0800-03
					(ATTACHING PARTS)		
-35	211-0373-00			4	SCREW,MACHINE:4-40 X 0.25,PNH,STL	80009	211-0373-00
					(END ATTACHING PARTS)		
-36	131-0799-00			4	CONTACT,ELEC:PLUG-IN GND,BE NI CD PL	80009	131-0799-00
					(ATTACHING PARTS)		
-37	211-0373-00			4	SCREW,MACHINE:4-40 X 0.25,PNH,STL	80009	211-0373-00
					(END ATTACHING PARTS)		
-38	344-0131-00			4	CLIP,SPR TNSN:CKT BOARD MT,ACETAL BLACK	80009	344-0131-00

ManualsPlus.com

Fig. & Index No.	Tektronix Part No.	Serial/Assembly No. Effective	Dscont	Qty	12345 Name & Description	Mfr. Code	Mfr. Part No.
2-					(ATTACHING PARTS)		
-39	211-0373-00			4	SCREW,MACHINE:4-40 X 0.25,PNH,STL	80009	211-0373-00
					(END ATTACHING PARTS)		
-40	129-0220-00			1	SPACER,POST:0.281 L,6-32 THRU,ACETAL	80009	129-0220-00
-41	150-0121-05			1	LAMP,CARTRIDGE:5V,0.06A,GREEN LENS	80009	150-0121-05
-42	670-9830-00			1	CIRCUIT BD ASSY:FRONT PANEL BUTTON	80009	670-9830-00
					(SEE A11)		
					(ATTACHING PARTS)		
-43	211-0408-00			7	SCR,ASSEM WSHR:4-40 X 0.250,PNH,STL TORX	93907	ORDER BY DESCR
					(END ATTACHING PARTS)		
-44	366-0600-00			10	PUSH BUTTON:0.269 X 0.409,ABS	80009	366-0600-00
-45	670-9825-00			1	CIRCUIT BD ASSY:CRT SOCKET	80009	670-9825-00
					(SEE A27)		
-46	441-1769-01			1	CHASSIS,PLATE:ALUMINUM	80009	441-1769-01
					(ATTACHING PARTS)		
-47	211-0722-00			2	SCREW,MACHINE:6-32 X 0.25,PNH,STL	80009	211-0722-00
-48	211-0734-00			6	SCREW,MACHINE:6-32 X 0.25,FLH,100 DEG,STL	83486	ORDER BY DESCR
-49	212-0682-00			1	SCREW,MACHINE:10-32 X 0.5,PNH,STL	TK0858	212-0682-00
-50	358-0717-00			1	BSHG,SLV:0.2 X 0.345 X 0.17 THK,NYL/DELRIN	80009	358-0717-00
					(END ATTACHING PARTS)		
-51	200-3386-01			1	COVER,CRT:ALUMINUM	80009	200-3386-01
					(ATTACHING PARTS)		
-52	211-0373-00			10	SCREW,MACHINE:4-40 X 0.25,PNH,STL	80009	211-0373-00
					(END ATTACHING PARTS)		
-53	129-1168-00			2	SPCR,POST:2.07 L,0.138-32 THD BOTH ENDS,AL,	80009	129-1168-00
					0.250 HEX		
-54	211-0711-00			1	SCR,ASSEM WSHR:6-32 X 0.25,PNH,STL,TORX,T15	01536	ORDER BY DESCR
					(ATTACHING PART TO SOCKET BOARD GND WIRE)		
-55	351-0765-00			16	GUIDE,CKT BOARD:NYLON	30010	29-0124D
-56	358-0729-00			1	BUSHING,SLEEVE:0.250 X 0.080,NYLON	96881	NYLINER 4L1FF
-57	351-0746-00			1	GUIDE,CKT BOARD:NYLON 6.803 L	80009	351-0746-00
					(ATTACHING PARTS)		
-58	211-0711-00			1	SCR,ASSEM WSHR:6-32 X 0.25,PNH,STL,TORX,T15	01536	ORDER BY DESCR
					(END ATTACHING PARTS)		
-59	343-1318-00			2	RTNR,CARD CAGE:CIRCUIT BOARD	80009	343-1318-00
					(ATTACHING PARTS)		
-60	211-0722-00			2	SCREW,MACHINE:6-32 X 0.25,PNH,STL	80009	211-0722-00
					(END ATTACHING PARTS)		
-61	386-5567-00			1	SPRT,PLATFORM:STEEL	80009	386-5567-00
-62	211-0711-00			1	SCR,ASSEM WSHR:6-32 X 0.25,PNH,STL,TORX,T15	01536	ORDER BY DESCR
					(ATTACHING PART TO PWR SPLY GND WIRE)		
-63	386-5501-00			1	PLATE,CONN:STANDARD,ALUMINUM	80009	386-5501-00
					(ATTACHING PARTS)		
-64	211-0721-00			8	SCREW,MACHINE:6-32 X 0.375,PNH,STL	83486	ORDER BY DESCR
					(END ATTACHING PARTS)		
-65	214-2476-00			2	HDW ASSY KIT:BAIL LOCK,ELEC CONN RCPT MTG	00779	552567-3
					(ATTACHING PARTS)		
-66	211-0410-00			2	SCR,ASSEM WSHR:4-40 X 0.437,PNH,STL	93907	ORDER BY DESCR
					(END ATTACHING PARTS)		
-67	671-0013-00			1	CIRCUIT BD ASSY:REAR PANEL	80009	671-0013-00
					(SEE A12, EXCHANGE ITEM)		
					(ATTACHING PARTS)		
-68	129-0774-00			2	SPCR,POST:0.25,4-40 EXT END,BRS,0.25 HEX	80009	129-0774-00
-69	214-3106-00			2	HARDWARE KIT:JACK SOCKET	53387	3341-1S
-70	211-0410-00			1	SCR,ASSEM WSHR:4-40 X 0.437,PNH,STL	93907	ORDER BY DESCR
					(END ATTACHING PARTS)		
-71	334-7307-00			1	MARKER,IDENT:MARKED CAUTION	80009	334-7307-00
-72	119-2600-00			1	FAN,TUBEAXIAL:12V,5.9W,3000 RPM,78 CFM	80009	119-2600-00
					(ATTACHING PARTS)		
-73	210-0457-00			4	NUT,PL,ASSEM WA:6-32 X 0.312,STL CD PL	78189	511-061800-00
					(END ATTACHING PARTS)		
-74	378-0311-00			1	SCREEN,FAN:4.8 X 4.8	80009	378-0311-00
-75	211-0711-00			1	SCR,ASSEM WSHR:6-32 X 0.25,PNH,STL,TORX,T15	01536	ORDER BY DESCR
					(ATTACHING PART FOR REAR PANEL GND WIRE)		
-76	119-2610-00			1	FAN,TUBEAXIAL:12VDC,3.5W,3100 RPM,37 CFM	TK0510	FBH-09A12L
					(ATTACHING PARTS)		
-77	210-0457-00			3	NUT,PL,ASSEM WA:6-32 X 0.312,STL CD PL	78189	511-061800-00
					(END ATTACHING PARTS)		

ManualsPlus.com

Fig. & Index No.	Tektronix Part No.	Serial/Assembly No. Effective	Dscont	Qty	12345 Name & Description	Mfr. Code	Mfr. Part No.
2-78	378-0310-00			1	SCREEN,FAN:3.65 X 3.65	80009	378-0310-00
-79	386-5496-01			1	SUBPANEL,REAR:	80009	386-5496-01
					(ATTACHING PARTS)		
-80	211-0725-00			8	SCREW,MACHINE:6-32 X 0.375,FLH	01536	ORDER BY DESCR
					(END ATTACHING PARTS)		
-81	386-5503-00			1	PLATE,REAR:POWER SUPPLY,ALUMINUM	80009	386-5503-00
					(ATTACHING PARTS)		
-82	211-0721-00			10	SCREW,MACHINE:6-32 X 0.375,PNH,STL	83486	ORDER BY DESCR
-83	211-0730-00			4	SCR,ASSEM WSHR:6-32 X 0.375,PNH,STL CD PL, TORX T15	80009	211-0730-00
					(END ATTACHING PARTS)		
-84	351-0791-00			2	GUIDE,PWR SPLY:POLYCARBONATE	80009	351-0791-00
-85	610-0754-01			1	CHASSIS ASSY:ALUMINUM	80009	610-0754-01

ManualsPlus.com

Fig. & Index No.	Tektronix Part No.	Serial/Assembly No. Effective	Dscont	Qty	12345 Name & Description	Mfr. Code	Mfr. Part No.
3-1	670-9818-00			1	CIRCUIT BD ASSY:CRT DRIVER	80009	670-9818-00
					(SEE A24, EXCHANGE ITEM)		
					(ATTACHING PARTS)		
-2	211-0409-00			11	SCR,ASSEM WSHR:4-40 X 0.312,PNH,STL	93907	ORDER BY DESCR
					(END ATTACHING PARTS)		
					CRT DRIVER BOARD ASSY INCLUDES:		
-3	159-0245-00			1	.FUSE,WIRE LEAD:1A,125V,FAST	75915	R251001T1
-4	670-9687-00			1	CIRCUIT BD ASSY:REGULATOR	80009	670-9687-00
					(SEE A4, EXCHANGE ITEM)		
					(ATTACHING PARTS)		
-5	211-0720-00			3	SCR,ASSEM WSHR:6-32 X 0.50,PNH,STL,TORX,T15	01536	829-09487
-6	211-0738-00			1	SCREW,MACHINE:6-32 X 0.625,PNH,STL	83486	ORDER BY DESCR
					(END ATTACHING PARTS)		
-7	343-0089-00			1	CLAMP,CABLE:0.3 DIA,PLASTIC	80009	343-0089-00
-8	670-9815-00			1	CIRCUIT BD ASSY:PLUG-IN INTERFACE	80009	670-9815-00
					(SEE A1)		
					(ATTACHING PARTS)		
-9	211-0409-00			9	SCR,ASSEM WSHR:4-40 X 0.312,PNH,STL	93907	ORDER BY DESCR
					(END ATTACHING PARTS)		
-10	670-9823-00			1	CIRCUIT BD ASSY:CALIBRATOR	80009	670-9823-00
					(SEE A5, EXCHANGE ITEM)		
					(ATTACHING PARTS)		
-11	211-0408-00			6	SCR,ASSEM WSHR:4-40 X 0.250,PNH,STL TORX	93907	ORDER BY DESCR
-12	210-0586-00			2	NUT,PL,ASSEM WA:4-40 X 0.25,STL CD PL	78189	211-041800-00
					(END ATTACHING PARTS)		
					CALIBRATOR BOARD ASSEMBLY INCLUDES:		
	160-4797-00			1	.MICROCKT,DGTL:MICROCONT,4K BYTES,EPROM,PRGM	80009	160-4797-00
					.(U510)		
-13	670-9813-00			1	CIRCUIT BD ASSY:FRONT PANEL CONTROL	80009	670-9813-00
					(SEE A10, EXCHANGE ITEM)		
					(ATTACHING PARTS)		
-14	211-0408-00			2	SCR,ASSEM WSHR:4-40 X 0.250,PNH,STL TORX	93907	ORDER BY DESCR
					(END ATTACHING PARTS)		
-15	670-9826-00			1	CIRCUIT BD ASSY:GEOMETRY	80009	670-9826-00
					(SEE A26)		
					(ATTACHING PARTS)		
-16	211-0408-00			2	SCR,ASSEM WSHR:4-40 X 0.250,PNH,STL TORX	93907	ORDER BY DESCR
					(END ATTACHING PARTS)		
-17	670-8851-00			1	CIRCUIT BD ASSY:MOTHER	80009	670-8851-00
					(SEE A13)		
					(ATTACHING PARTS)		
-18	211-0711-00			6	SCR,ASSEM WSHR:6-32 X 0.25,PNH,STL,TORX,T15	01536	ORDER BY DESCR
					(END ATTACHING PARTS)		
-19	670-9828-00			1	CIRCUIT BD ASSY:MINI MOTHER	80009	670-9828-00
					(SEE A21)		
					(ATTACHING PARTS)		
-20	211-0711-00			3	SCR,ASSEM WSHR:6-32 X 0.25,PNH,STL,TORX,T15	01536	ORDER BY DESCR
					(END ATTACHING PARTS)		
-21	670-9819-00			1	CIRCUIT BD ASSY:DIGITIZER CPU	80009	670-9819-00
					(SEE A19, EXCHANGE ITEM)		
-22	670-9820-00			1	CIRCUIT BD ASSY:DIGITIZER I/O	80009	670-9820-00
					(SEE A20, EXCHANGE ITEM)		
-23	159-0245-00			1	.FUSE,WIRE LEAD:1A,125V,FAST	75915	R251001T1
-24	670-8854-01			1	CIRCUIT BD ASSY:INPUT/OUTPUT	80009	670-8854-01
					(SEE A14, EXCHANGE ITEM)		
-25	159-0245-00			4	.FUSE,WIRE LEAD:1A,125V,FAST	75915	R251001T1
-26	146-0055-00			1	.BATTERY,DRY:3.0V,1200 MAH,LITHIUM	TK0510	BR-2/3A-E2P
-27	671-0851-00			1	CIRCUIT BD ASSY:MAIN PROCESSOR	80009	671-0851-00
					(SEE A17, EXCHANGE ITEM)		
-28	146-0055-00			1	.BATTERY,DRY:3.0V,1200 MAH,LITHIUM	TK0510	BR-2/3A-E2P
-29	671-0385-00			1	CIRCUIT BD ASSY:B.B MEMORY	80009	671-0385-00
					(SEE A18, EXCHANGE ITEM)		
	671-0385-50			1	CIRCUIT BD ASSY:BB MEMORY	80009	671-0385-50
					(SEE A18 OPTION 4C ONLY, EXCHANGE ITEM)		
-30	146-0055-00			1	.BATTERY,DRY:3.0V,1200 MAH,LITHIUM	TK0510	BR-2/3A-E2P
					.(OPTION 4C ONLY)		
-31	671-0852-00			1	CIRCUIT BD ASSY:MEMORY MGT UNIT	80009	671-0852-00
					(SEE A15, EXCHANGE ITEM)		

ManualsPlus.com

Fig. & Index No.	Tektronix Part No.	Serial/Assembly No. Effective	Dscont	Qty	12345 Name & Description	Mfr. Code	Mfr. Part No.
3-32	671-0879-00			1	CIRCUIT BD ASSY:DISPLAY CONTROLLER (SEE A16, EXCHANGE ITEM)	80009	671-0879-00
-33	159-0245-00			1	.FUSE,WIRE LEAD:1A,125V,FAST	75915	R251001T1
-34	670-9831-00			1	CIRCUIT BD ASSY:WAVE FORM PROCESSOR (SEE A8, EXCHANGE ITEM)	80009	670-9831-00
	670-9827-00			1	CIRCUIT BD ASSY:SIGNAL PROCESSOR (SEE A8 OPTION 3C ONLY, EXCHANGE ITEM)	80009	670-9827-00
					(ATTACHING PARTS)		
-35	211-0408-00			11	SCR,ASSEM WSHR:4-40 X 0.250,PNH,STL TORX	93907	ORDER BY DESCR
					(END ATTACHING PARTS)		
					SIGNAL PROCESSOR BD ASSY INCLUDES:		
-36	159-0245-00			1	.FUSE,WIRE LEAD:1A,125V,FAST	75915	R251001T1
-37	159-0245-00			1	.FUSE,WIRE LEAD:1A,125V,FAST	75915	R251001T1
-38	671-0015-00			1	CIRCUIT BD ASSY:UPPER ACQUISITION (SEE A7, EXCHANGE ITEM)	80009	671-0015-00
					(ATTACHING PARTS)		
-39	211-0408-00			21	SCR,ASSEM WSHR:4-40 X 0.250,PNH,STL TORX	93907	ORDER BY DESCR
					(END ATTACHING PARTS)		
					UPPER ACQUISITION BD ASSY INCLUDES:		
-40	159-0203-00			1	.FUSE,CARTRIDGE:2A,125V,FAST,SUBMINIATURE	71400	TR/A2
-41	165-2078-00			2	.MIROCKT,HYBRID:TIME INTERPOLATOR	80009	165-2078-00
					(ATTACHING PARTS)		
-42	210-0586-00			8	.NUT,PL,ASSEM WA:4-40 X 0.25,STL CD PL	78189	211-041800-00
					(END ATTACHING PARTS)		
-43	214-3965-00			2	.HEAT SINK,ELEC:DEMUX,ALUMINUM	80009	214-3965-00
					(ATTACHING PARTS)		
-44	214-4034-00			4	.SPRING,HLCPS:0.24 OD X 0.44 L,SST	80009	214-4034-00
					(END ATTACHING PARTS)		
-45	155-0328-00			1	.MICROCKT,DGTL:CLOCK DRIVER	80009	155-0328-00
	155-0340-00			1	.MICROCKT,DGTL:SWEEP CONTROLLER IN 100 PIN	80009	155-0340-00
-46	426-1352-00			2	.FRAME,MICROCKT:1.75 CM,STEPPED	80009	426-1352-00
					(ATTACHING PARTS)		
-47	211-0391-00			8	.SCREW,MACHINE:2-56 X 0.437,P4,STL CD PL	80009	211-0391-00
					(END ATTACHING PARTS)		
-48	214-4188-00			1	.HEATSINK,ELEC:TRIGGER IC,ALUMINUM	80009	214-4188-00
-49	220-0797-00			4	.NUT,CAPTIVE:2-56 X 0.218 DIA,STL CD PL	46384	CKF2-256
-50	165-2161-00			2	.MICROCKT,DGTL:TRIGGER,H2161	80009	165-2161-00
-51	159-0204-00			1	.FUSE,WIRE LEAD:3.0A,125V,5 SECONDS	TK0946	SP7-3A
-52	671-0014-00			1	CIRCUIT BD ASSY:LOWER ACQUISITION (SEE A6, EXCHANGE ITEM)	80009	671-0014-00
					(ATTACHING PARTS)		
-53	211-0408-00			18	SCR,ASSEM WSHR:4-40 X 0.250,PNH,STL TORX	93907	ORDER BY DESCR
					(END ATTACHING PARTS)		
					LOWER ACQUISITION BD ASSY INCLUDES:		
-54	214-3964-00			4	.HEAT SINK,ELEC:S/H FLASH,ALUMINUM	80009	214-3964-00
					(ATTACHING PARTS)		
-55	214-4034-00			8	.SPRING,HLCPS:0.24 OD X 0.44 L,SST	80009	214-4034-00
					(END ATTACHING PARTS)		
-56	155-0359-00			2	.MICROCKT,LINEAR:A.D PACKAGED HYBRID	80009	155-0359-00
	155-0342-00			2	.MICROCKT,DGTL:UTILITY CIRCUIT IN 100 PIN .QUAD PACK,465	80009	155-0342-00
					(ATTACHING PARTS)		
-57	211-0411-00			8	.SCR,ASSEM WSHR:4-40 X 0.5,PNH,STL	93907	ORDER BY DESCR
					(END ATTACHING PARTS)		
-58	343-1307-00			2	.RTNR,MICROCKT:2.2 X 1.3 X 0.27, .POLYCARBONATE	80009	343-1307-00
-59	214-3965-00			4	.HEAT SINK,ELEC:DEMUX,ALUMINUM	80009	214-3965-00
					(ATTACHING PARTS)		
-60	214-4034-00			8	.SPRING,HLCPS:0.24 OD X 0.44 L,SST	80009	214-4034-00
					(END ATTACHING PARTS)		
-61	155-0341-00			4	.MICROCKT,DGTL:DEMULTIPLEXER IN 100 PIN QUAD . PACK,M464	80009	155-0341-00
	020-1775-00			1	COMPONENT KIT:DSA601 FIRMWARE	80009	020-1775-00
					WIRE ASSEMBLIES		
	174-0801-01			1	CABLE ASSY,RF:8,50 OHM COAX,17.0 L (FROM A1J1 TO A6J2)	80009	174-0801-01

ManualsPlus.com

Fig. & Index No.	Tektronix Part No.	Serial/Assembly No. Effective	Dscont	Qty	12345 Name & Description	Mfr. Code	Mfr. Part No.
3-					(FROM A1J3 TO A6J4)		
					(FROM A1J5 TO A6J6)		
					(FROM A1J9 TO A6J10)		
	174-0802-01			1	CABLE ASSY,RF:4,50 OHM COAX,33.15 L	80009	174-0802-01
					(FROM A1J7 TO A7J8)		
					(FROM A1J11 TO A7J12)		
	174-0884-00			1	CA ASSY,SP,ELEC:40,28 AWG,11.5 L,RIBBON	80009	174-0884-00
					(FROM A5J29 TO A6J29)		
	174-0885-00			1	CA ASSY,SP,ELEC:50,28 AWG,6.0 L,RIBBON	80009	174-0885-00
					(FROM A15J83 TO A20J83)		
	174-0886-00			2	CA ASSY,SP,ELEC:50,28 AWG,41.5 L,RIBBON	80009	174-0886-00
					(FROM A19J47 TO A8J47, STANDARD ONLY)		
					(FROM A19J48 TO A8J48, STANDARD ONLY)		
	174-1236-00			2	CA ASSY,SP,ELEC:20,28 AWG,25.0 L,RIBBON	80009	174-1236-00
					(FROM A19J47 TO A8J47, OPTION 3C ONLY)		
					(FROM A19J48 TO A8J48, OPTION 3C ONLY)		
	174-0888-00			1	CA ASSY,SP,ELEC:50,28 AWG,15.25 L,RIBBON	80009	174-0888-00
					(FROM A20J28 TO A5J28)		
	174-0898-00			1	CA ASSY,SP,ELEC:34,28 AWG,7.5 L,RIBBON	80009	174-0898-00
					(FROM A10J73 TO A9A1J73)		
	174-1113-00			1	CA ASSY,SP,ELEC:40,28 AWG,7.0 L,RIBBON	80009	174-1113-00
					(FROM A14J78 TO A12J78)		
	174-1126-00			1	CA ASSY,SP,ELEC:4,26 AWG,16.125 L	80009	174-1126-00
					(CRT HARNESS, FROM CRT TO CRT DRIVER BOARD)		
	174-1132-00			1	CA ASSY,SP,ELEC:26 AWG,8.5 L,RIBBON	80009	174-1132-00
					(FROM A1J92 TO A5J92)		
	174-1133-00			1	CA ASSY,SP,ELEC:26 AWG,17.0 L,RIBBON	80009	174-1133-00
					(FROM A7J91 TO A1J91)		
	174-1134-00			1	CA ASSY,SP,ELEC:18 AWG,17.5 L,RIBBON	80009	174-1134-00
					(FROM A4J94 TO A24J94)		
	174-1135-00			1	CA ASSY,SP,ELEC:18 AWG,17.5 L,RIBBON	80009	174-1135-00
					(FROM A4J96 TO A24J96)		
	174-1136-00			1	CA ASSY,SP,ELEC:26 AWG,8.0 L,RIBBON	80009	174-1136-00
					(FROM A24J35 TO A27J35)		
	174-1140-00			1	CA ASSY,SP,ELEC:POWER HARNESS	80009	174-1140-00
					(MAIN POWER HARNESS)		
	174-1141-00			1	CA ASSY,SP,ELEC:4,18 AWG,28.5 L	80009	174-1141-00
					(CARD CAGE HARNESS)		
	174-1246-00			1	CA ASSY,SP,ELEC:4,26 AWG,14.5 L,RIBBON	80009	174-1246-00
					(FROM A27J36 TO A24J36)		
	174-1247-00			1	CA ASSY,SP,ELEC:11,26 AWG,14.5 L,RIBBON	80009	174-1247-00
					(FROM A26J33,J34 TO A24J33,J34)		
	174-1393-00			1	CABLE,SP,ELEC:20,28 AWG,9.5 L,STRD/VINYL	80009	174-1393-00
					(FROM A24J53 TO A16J53)		
	174-1394-00			1	CABLE,SP,ELEC:26,28 AWG,19.5 L,STRD/VINYL	80009	174-1394-00
					(FROM A24J54 TO A16J54)		
	175-9809-00			1	CA ASSY,SP,ELEC:50,3.0 L	80009	175-9809-00
					(FROM A15J79 TO A16J79)		
	175-9814-00			1	CA ASSY,SP,ELEC:34,3.0 L	80009	175-9814-00
					(FROM A14J77 TO A17J77)		
	175-9854-00			1	CA ASSY,SP,ELEC:36,28 AWG,7.0 L	80009	175-9854-00
					(FROM A14J72 TO A10J72)		

ManualsPlus.com

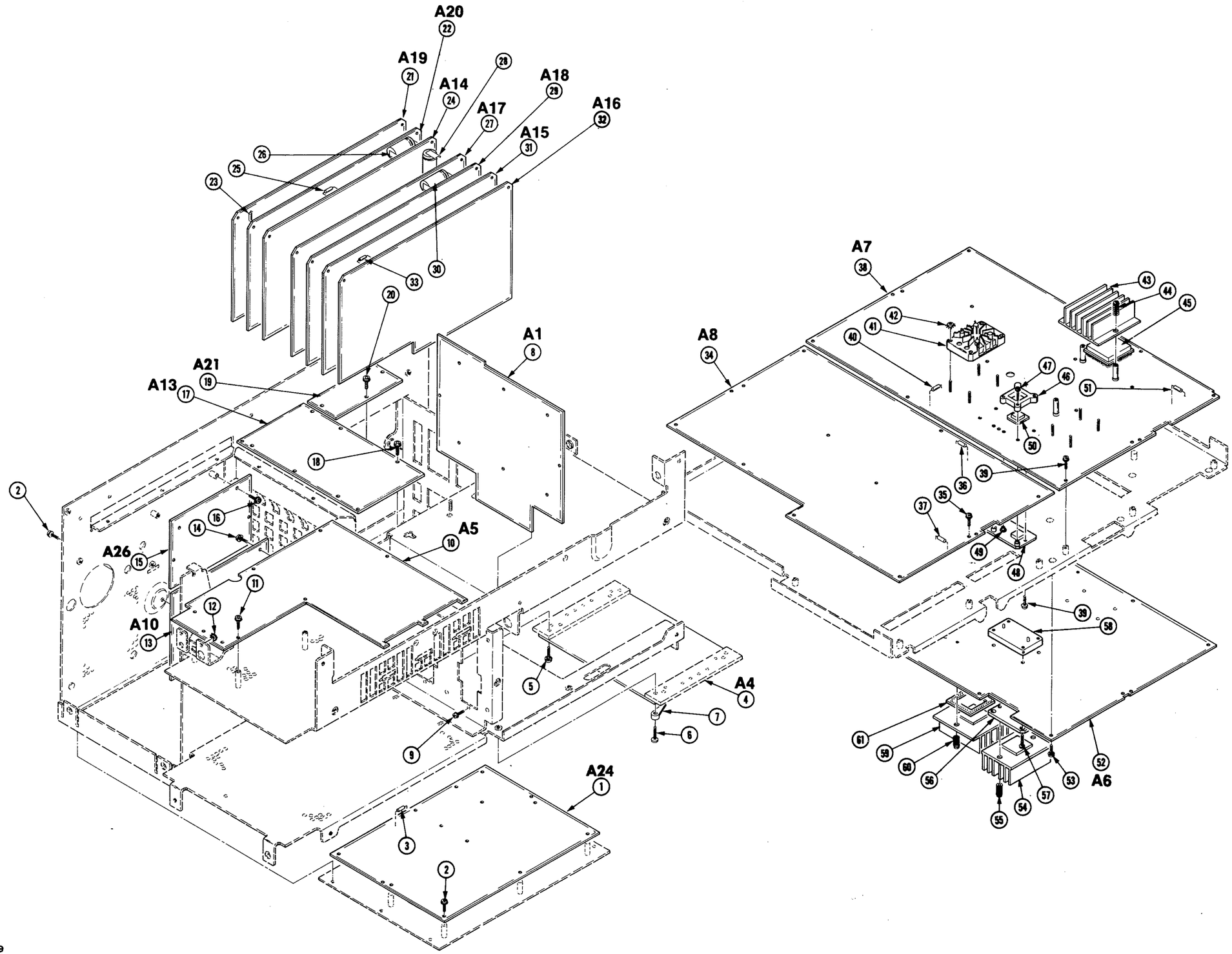

Fig. 3 Circuit Boards

ManualsPlus.com

Fig. 4 Power Supply

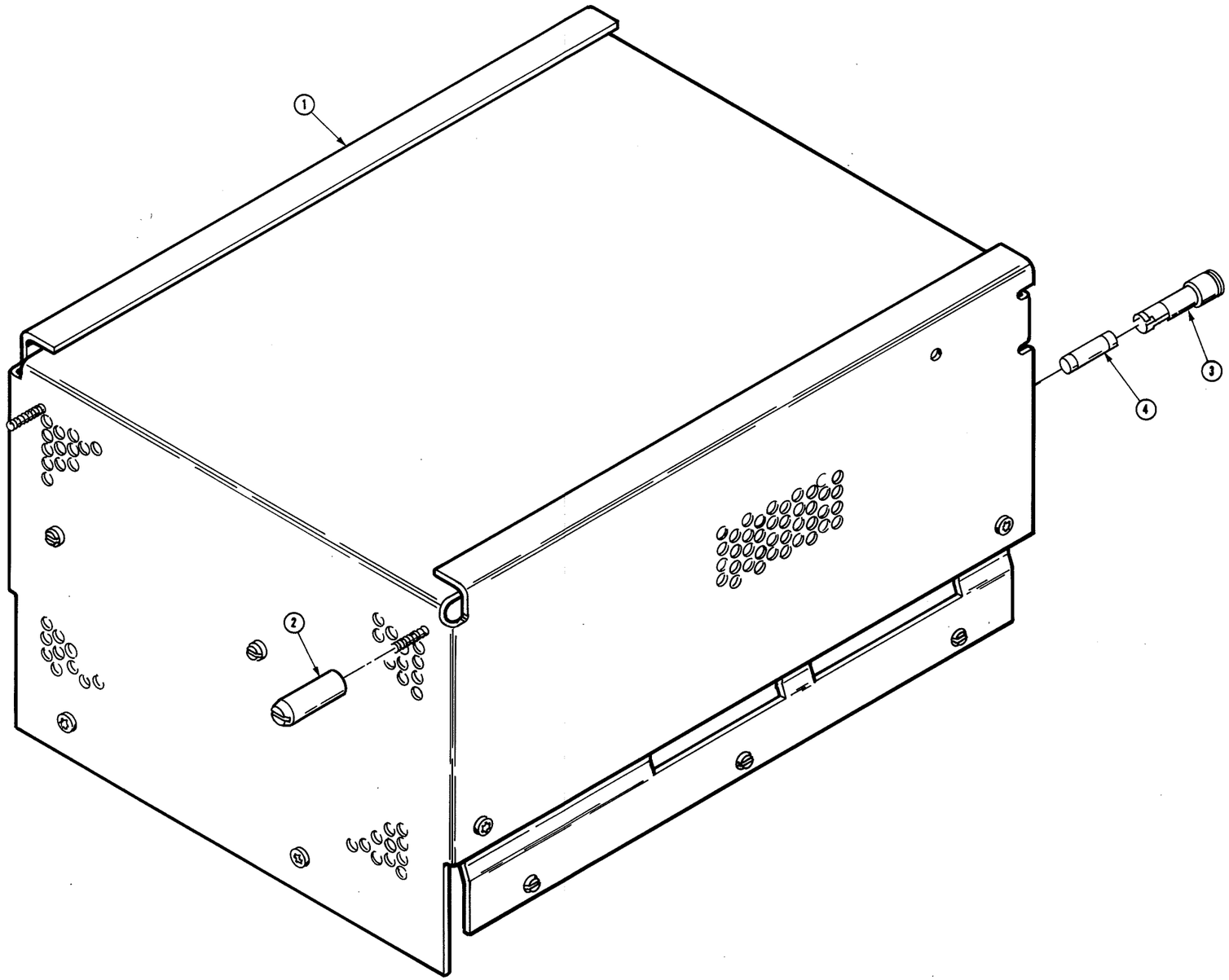

ManualsPlus.com

Fig. & Index No.	Tektronix Part No.	Serial/Assembly No. Effective	Dscont	Qty	12345 Name & Description	Mfr. Code	Mfr. Part No.
4-1	620-0033-00			1	POWER SUPPLY:LBT MAINFRAME (SEE A2, EXCHANGE ITEM)	80009	620-0033-00
-2	214-4082-00			2	.PIN,GUIDE:0.850 L,METAL	80009	214-4082-00
-3	200-2264-00			1	.CAP,FUSEHOLDER:3AG FUSES	S3629	FEK 031 1666
	204-0832-00			1	.BODY,FUSEHOLDER:3AG & 5 X 20MM FUSES	TK0861	031 1673
	119-2610-00			1	.FAN,TUBEAXIAL:12VDC,3.5W,3100 RPM,37 CFM	TK0510	FBH-09A12L
-4	159-0088-00			1	.FUSE,CARTRIDGE:3AG,12A,250V,30SEC,CER	75915	314012
	159-0017-00			1	.FUSE,CARTRIDGE:3AG,4A,250V,FAST BLOW .(F520, PART OF LINE INVERTER BOARD)	71400	MTH-CW-4
	159-0248-00			1	.FUSE,WIRE LEAD:1.5 A,AXIAL LEAD .(F130, PART OF LINE INVERTER BOARD)	75915	R25101.5 T1
	159-0220-00			1	.FUSE,WIRE LEAD:3A,125V,FAST .(F450, PART OF CONTROL RECTIFIER BOARD)	71400	TRA3
					POWER SUPPLY WIRE ASSEMBLIES		
	174-0892-00			1	CA ASSY,SP,ELEC:3,22 AWG,10.0 L,RIBBON (FROM A2A2J80,J81,J82 TO FANS)	80009	174-0892-00
	174-1128-00			1	CA ASSY,SP,ELEC:18 AWG,3.5 L,RIBBON (FROM A2A2J61 TO A4J61)	80009	174-1128-00
	174-1129-00			1	CA ASSY,SP,ELEC:18 AWG,4.0 L,RIBBON (FROM A2A2J62 TO A4J62)	80009	174-1129-00
	174-1130-00			1	CA ASSY,SP,ELEC:26 AWG,3.5 L,RIBBON (FROM A2A2J65 TO A4J65)	80009	174-1130-00
	175-9933-00			1	CA ASSY,SP,ELEC:20,28 AWG,5.15 L,RIBBON (FROM A2A1J70 TO A2A2J70)	80009	175-9933-00
	196-3071-00			1	LEAD,ELECTRICAL:18 AWG,4.0 L,5-4 (GND WIRE, FROM LINE FILTER TO CHASSIS)	80009	196-3071-00
	196-3072-00			1	LEAD,ELECTRICAL:18 AWG,2.0 L,9-N (LINE FILTER TO FUSE HOLDER)	80009	196-3072-00
	196-3074-00			1	LEAD,ELECTRICAL:18 AWG,12.0 L,5-4 (GND WIRE, FROM POWER SUPPLY TO CHASSIS)	80009	196-3074-00
	196-3075-00			2	LEAD,ELECTRICAL:18 AWG,2.0 L,9-N (FROM A2A1W100 TO FUSE HOLDER) (FROM A2A1W110 TO LINE FILTER)	80009	196-3075-00

ManualsPlus.com

Fig. & Index No.	Tektronix Part No.	Serial/Assembly No. Effective	Dscont	Qty	12345 Name & Description	Mfr. Code	Mfr. Part No.
5-							
					OPTION 1C		
-1	386-5502-00			1	PLATE,CONN MTG:OPTIONAL,ALUMINUM	80009	386-5502-00
-2	333-3415-01			1	PANEL,FRONT:DSA601,LOWER	80009	333-3415-01
-3	131-1315-01			16	CONN,RCPT,ELEC:BNC,FEMALE (FRONT AND REAR)	80009	131-1315-01
	012-0208-00			8	CABLE,INTCON:10.0 L	80009	012-0208-00
	174-1139-00			2	CABLE ASSY,RF:4,500 OHM,33.0 L	80009	174-1139-00
					OPTION 3C		
-4	386-5503-00			1	PLATE,REAR:POWER SUPPLY,ALUMINUM (SAME AS STANDARD POWER SUPPLY REAR PLATE EXCEPT REMOVE CONNECTOR OPENING COVER.)	80009	386-5503-00
-5	174-0895-00			1	CA ASSY,SP,ELEC:2,22 AWG,24.75 L,RIBBON (ATTACHING PARTS)	80009	174-0895-00
-6	210-0586-00			4	NUT,PL,ASSEM WA:4-40 X 0.25,STL CD PL (END ATTACHING PARTS)	78189	211-041800-00
-7	131-4309-00			1	CONN,PLUG,ELEC:CIRC BAY LKG,MALE,2 POS	80009	131-4309-00
	670-9827-00			1	CIRCUIT BD ASSY:SIGNAL PROCESSOR (REFER TO FIG.3 CIRCUIT BOARDS, SEE A8)	80009	670-9827-00

ManualsPlus.com

Fig. 5 Options

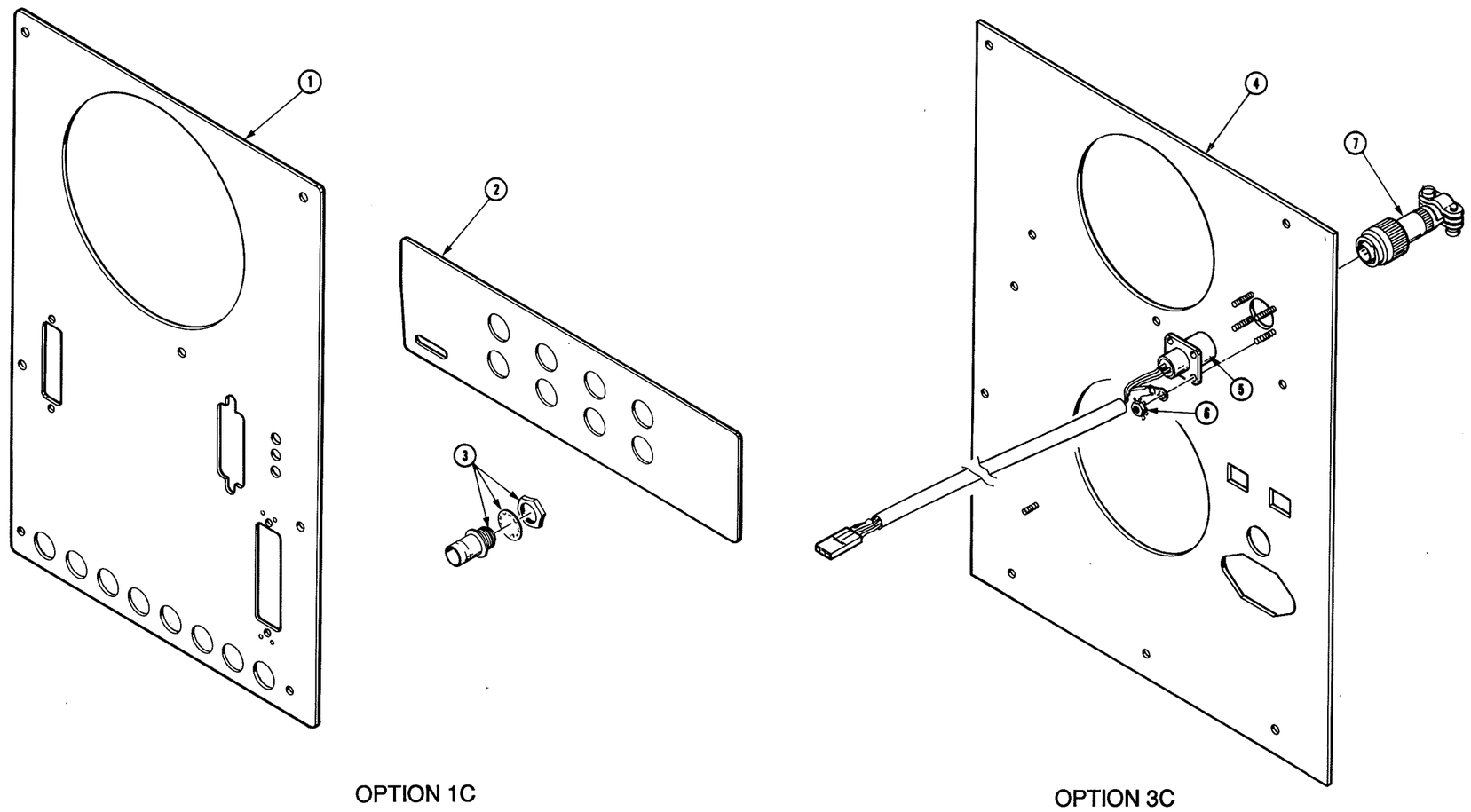

ManualsPlus.com

Fig. 6 Accessories

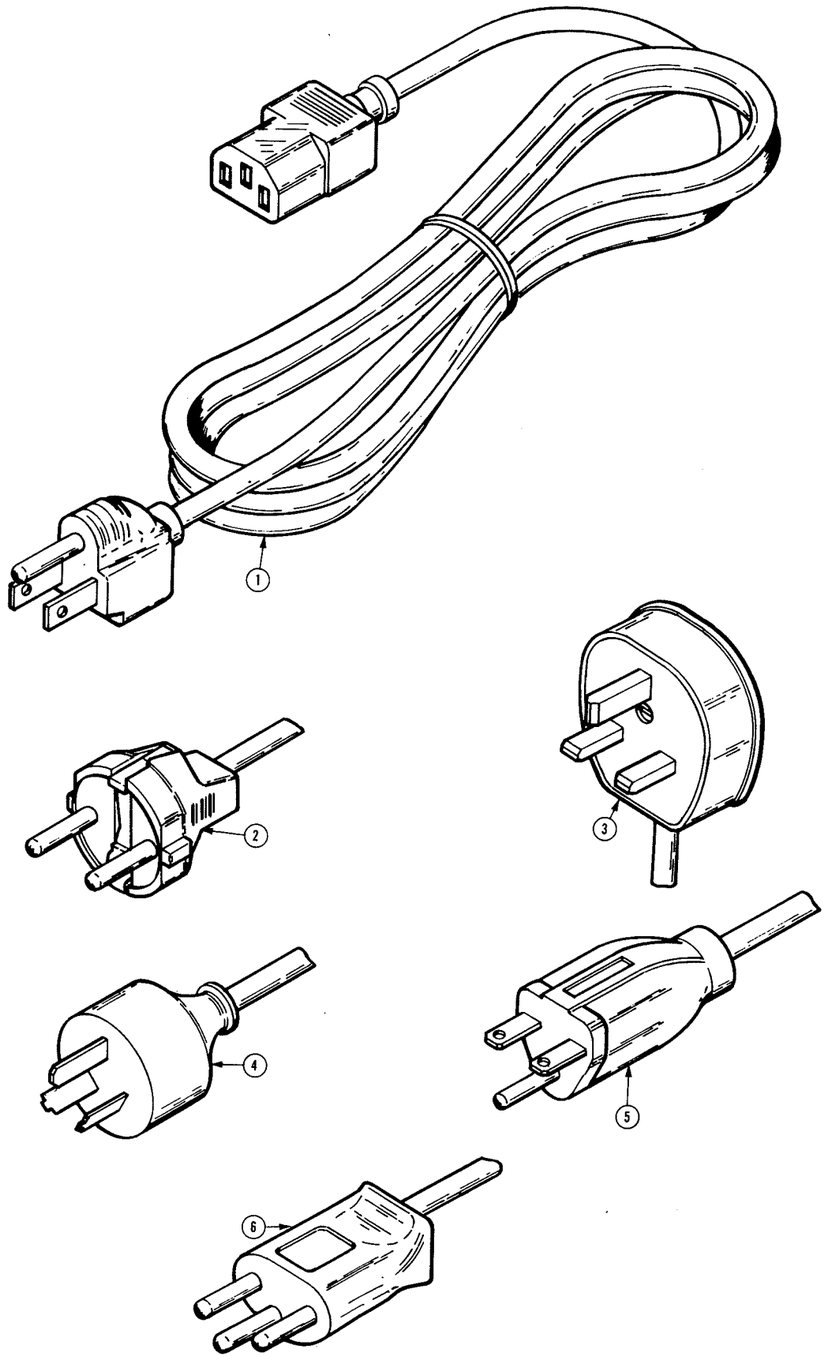

ManualsPlus.com

Fig. & Index No.	Tektronix Part No.	Serial/Assembly No. Effective	Dscont	Qty	12345 Name & Description	Mfr. Code	Mfr. Part No.
6-					STANDARD ACCESSORIES		
-1	161-0066-00			1	CABLE ASSY,PWR,:3,18AWG,115V,98.0 L	16428	CH8481, FH8481
-2	161-0066-09			1	CABLE ASSY,PWR,:3,0.75MM SQ,220V,99.0 L (OPTION A1 ONLY)	S3109	86511000
-3	161-0066-10			1	CABLE ASSY,PWR,:3,0.75MM SQ,240V,96.0 L (OPTION A2 ONLY)	TK1373	24230
-4	161-0066-11			1	CABLE ASSY,PWR,:3,0.75MM,240V,96.0 L (OPTION A3 ONLY)	S3109	ORDER BY DESCR
-5	161-0066-12			1	CABLE ASSY,PWR,:3,18 AWG,250V,99.0 L (OPTION A4 ONLY)	70903	CH-77893
-6	161-0154-00			1	CABLE ASSY,PWR,:3,0.75MM SQ,240V,6A,2.5M L (OPTION A5 ONLY)	S3109	86515000
	013-0195-00			1	ADAPTER,CONN:BNC TO PROBE	80009	013-0195-00
	015-0580-00			1	POCKET SIG GEN:TUTORIAL MANUAL AID	80009	015-0580-00
	070-7249-00			1	MANUAL,TECH:TUTORIAL,DSA601/602	80009	070-7249-00
	070-7250-00			1	MANUAL,TECH:USERS REF,DSA601/602	80009	070-7250-00
	070-7251-00			1	MANUAL,TECH:PRGM REF,DSA601/602	80009	070-7251-00
	070-7252-00			1	MANUAL,TECH:COMMAND REF,DSA601/602	80009	070-7252-00
	070-7254-00			1	MANUAL,TECH:SERVICE REF,DSA601/602	80009	070-7254-00
	070-7529-00			1	MANUAL,TECH:INSTR,DSA600 SERIES (OPTION 1R ONLY)	80009	070-7529-00
					OPTIONAL ACCESSORIES		
	012-0555-00			1	CABLE,INTCON:3 METERS	80009	012-0555-00
	012-0630-03			1	CABLE,INTCON:2.0M L	74868	AC30147-102
	012-0911-00			1	CABLE,INTCON:144.0 L, RS 232	TK6020	ESF-85249
	016-0829-00			1	PANEL,BLANK:PLUG-IN HOUSING,11K SERIES	80009	016-0829-00

ManualsPlus.com

Replaceable Parts

This section contains a list of the components that are replaceable for the DSA 601 and DSA 602 Digitizing Signal Analyzers. As described below, use this list to identify and order replacement parts.

Parts Ordering Information

Replacement parts are available from or through your local Tektronix, Inc. service center or representative.

Changes to Tektronix instruments are sometimes made to accommodate improved components as they become available and to give you the benefit of the latest circuit improvements. Therefore, when ordering parts, it is important to include the following information in your order:

- Part number
- Instrument type or model number
- Instrument serial number
- Instrument modification number, if applicable

If a part you order has been replaced with a different or improved part, your local Tektronix service center or representative will contact you concerning any change in the part number.

Change information, if any, is located at the rear of this manual.

Module Replacement

The DSA 601 and DSA 602 Digitizing Signal Analyzers are serviced by module replacement so there are three options you should consider:

- **Module Exchange.** In some cases you may exchange your module for a remanufactured module. These modules cost significantly less than new modules and meet the same factory specifications. For more information about the module exchange program, call 1-800-TEKWIDE, ext. BVJ5799.
- **Module Repair.** You may ship your module to us for repair, after which we will return it to you.
- **New Modules.** You may purchase new replacement modules in the same way as other replacement parts.

ManualsPlus.com

Using the Replaceable Parts List

The tabular information in the Replaceable Parts List is arranged for quick retrieval. Understanding the structure and features of the list will help you find the all the information you need for ordering replacement parts.

Item Names

In the Replaceable Parts List, an Item Name is separated from the description by a colon (:). Because of space limitations, an Item Name may sometimes appear as incomplete. For further Item Name identification, U.S. Federal Cataloging Handbook H6-1 can be used where possible.

Indentation System

This parts list is indented to show the relationship between items. The following example is of the indentation system used in the Description column:

1 2 3 4 5 Name & Description

Assembly and/or Component
Attaching parts for Assembly and/or Component
(END ATTACHING PARTS)

Detail Part of Assembly and/or Component
Attaching parts for Detail Part
(END ATTACHING PARTS)

Parts of Detail Part
Attaching parts for Parts of Detail Part
(END ATTACHING PARTS)

Attaching parts always appear at the same indentation as the item it mounts, while the detail parts are indented to the right. Indented items are part of, and included with, the next higher indentation. Attaching parts must be purchased separately, unless otherwise specified.

Abbreviations

Abbreviations conform to American National Standards Institute (ANSI) standard Y1.1

ManualsPlus.com

CROSS INDEX - MFR. CODE NUMBER TO MANUFACTURER

Mfr. Code	Manufacturer	Address	City, State, Zip Code
00779	AMP INC	2800 FULLING MILL PO BOX 3608	HARRISBURG PA 17105
01536	TEXTRON INC CAMCAR DIV SEMS PRODUCTS UNIT	1818 CHRISTINA ST	ROCKFORD IL 61108
06383	PANDUIT CORP	17301 RIDGELAND	TINLEY PARK IL 07094-2917
11897	PLASTIGLIDE MFG CORP	2701 W EL SEGUNDO BLVD	HAWTHORNE CA 90250-3318
12327	FREEWAY CORP	9301 ALLEN DR	CLEVELAND OH 44125-4632
16428	COOPER BELDEN ELECTRONIC WIRE AND CA SUB OF COOPER INDUSTRIES INC	NW N ST	RICHMOND IN 47374
30010	BICC-VERO ELECTRONICS INC	40 LINDEMAN DR	TRUMBULL CT 06611-4739
46384	PENN ENGINEERING AND MFG CORP	OLD EASTON RD PO BOX 1000	DANBORO PA 18916
53387	MINNESOTA MINING AND MFG CO ELECTRONIC PRODUCTS DIV	3M CENTER	ST PAUL MN 55101-1428
70903	COOPER BELDEN ELECTRONICS WIRE AND C SUB OF COOPER INDUSTRIES INC	2000 S BATAVIA AVE	GENEVA IL 60134-3325
71400	BUSSMANN DIV OF COOPER INDUSTRIES INC	114 OLD STATE RD PO BOX 14460	ST LOUIS MO 63178
74868	AMPHENOL CORP R F CONNECTORS (OPNS)	1 KENNEDY AVE	DANBURY CT 06810-5803
75915	LITTELFUSE INC SUB TRACOR INC	800 E NORTHWEST HWY	DES PLAINES IL 60016-3049
78189	ILLINOIS TOOL WORKS INC SHAKEPROOF DIV	ST CHARLES ROAD	ELGIN IL 60120
80009	TEKTRONIX INC	14150 SW KARL BRAUN DR PO BOX 500	BEAVERTON OR 97077-0001
83486	ELCO INDUSTRIES INC	1101 SAMUELSON RD	ROCKFORD IL 61101
83553	ASSOCIATED SPRING BARNES GROUP INC	15001 S BROADWAY P O BOX 231	GARDENA CA 90248-1819
93907	TEXTRON INC CAMCAR DIV	600 18TH AVE	ROCKFORD IL 61108-5181
96881	THOMSON INDUSTRIES INC	SHORE RD AT CHANNEL DR	PORT WAHSINGTON NY 11050
S3109	FELLER	ASA ADOLF AG STOTZWEID CH8810	HORGEN SWITZERLAND
S3629	SCHURTER AG H C/O PANEL COMPONENTS CORP	2015 SECOND STREET	BERKELEY CA 94170
TK0510	PANASONIC COMPANY DIV OF MATSUSHITA ELECTRIC CORP	ONE PANASONIC WAY	SECAUCUS NJ 07094
TK0858	STAUFFER SUPPLY CO (DIST)	810 SE SHERMAN	PORTLAND OR 97214
TK0861	H SCHURTER AG DIST PANEL COMPONENTS	2015 SECOND STREET	BERKELEY CA 94170
TK0935	MARQUARDT SWITCHES INC	67 ALBANY ST PO BOX 465	CAZENOVIA NY 13035-1219
TK1373	PATELEC-CEM (ITALY)	10156 TORINO	VAICENTALLO 62/45S ITALY
TK1543	CAMCAR/TEXTRON	600 18TH AVE	ROCKFORD IL 61108-5181
TK1546	DTM PRODUCTS INC	4725 NAUTILUS COURT S	BOULDER CO 80301
TK2038	MULTICOMP INC	3005 SW 154TH TERRACE #3	BEAVERTON OR 97006
TK6020	DAINICHI-NIPPON CABLES	NEW KOKUSAI BLDG 4-1 MARUNOUCHI 3-CHOME CHIYODA-KU	TOKYO 100 JAPAN

ManualsPlus.com

Fig. & Index No.	Tektronix Part No.	Serial/Assembly No. Effective	Dscont	Qty	12345 Name & Description	Mfr. Code	Mfr. Part No.
1-1	200-3350-00			1	COVER,CABINET:UPPER,ALUMINUM	80009	200-3350-00
-2	214-0603-02			4	.PIN ASSY,SECRG:W/SPRING WASHER	80009	214-0603-02
-3	386-1151-00			4	.CLAMP,RIM CLENC:SPG STL CD PL	83553	ORDER BY DESCR
-4	386-0227-00			4	.STOP,CLP,RIM CL:	80009	386-0227-00
-5	348-0875-00			1	FLIPSTAND,CAB.:	80009	348-0875-00
-6	200-3351-00			1	COVER,CABINET:LOWER,ALUMINUM	80009	200-3351-00
-7	214-0603-02			4	.PIN ASSY,SECRG:W/SPRING WASHER	80009	214-0603-02
-8	386-1151-00			4	.CLAMP,RIM CLENC:SPG STL CD PL	83553	ORDER BY DESCR
-9	386-0227-00			4	.STOP,CLP,RIM CL:	80009	386-0227-00
-10	348-0596-00			4	PAD,CAB.FOOT:0.69 X 0.255 X 0.06,PU	80009	348-0596-00
-11	348-0879-00			4	FOOT,CABINET:BOTTOM,BLUE,POLYCARBONATE	80009	348-0879-00
					(ATTACHING PARTS)		
-12	211-0734-00			4	SCREW,MACHINE:6-32 X 0.25,FLH,100 DEG,STL	83486	ORDER BY DESCR
					(END ATTACHING PARTS)		
-13	348-0980-00			4	SHIL GSKT,ELEK:FINGER TYPE,21.0 L	80009	348-0980-00
-14	426-2177-00			2	FRAME SECT,CAB.:RIGHT/LEFT,ALUMINUM	80009	426-2177-00
					(ATTACHING PARTS)		
-15	212-0681-00			4	SCREW,MACHINE:10-32 X 0.25,PNH,STL	83486	ORDER BY DESCR
-16	211-0734-00			3	SCREW,MACHINE:6-32 X 0.25,FLH,100 DEG,STL	83486	ORDER BY DESCR
					(END ATTACHING PARTS)		
-17	101-0116-00			2	TRIM,DECORATIVE:FRONT	80009	101-0116-00
					(ATTACHING PARTS)		
-18	212-0158-00			4	SCREW,MACHINE:8-32 X 0.375,PNH,STL	83486	ORDER BY DESCR
					(END ATTACHING PARTS)		
-19	200-2191-00			4	CAP,RETAINER:PLASTIC	80009	200-2191-00
-20	367-0248-01			2	HANDLE,CARRYING:16.341 L,W/CLIP	80009	367-0248-01
-21	101-0117-00			2	TRIM,DECORATIVE:REAR	80009	101-0117-00
					(ATTACHING PARTS)		
-22	212-0158-00			4	SCREW,MACHINE:8-32 X 0.375,PNH,STL	83486	ORDER BY DESCR
					(END ATTACHING PARTS)		

ManualsPlus.com

Fig. 1 Cabinet

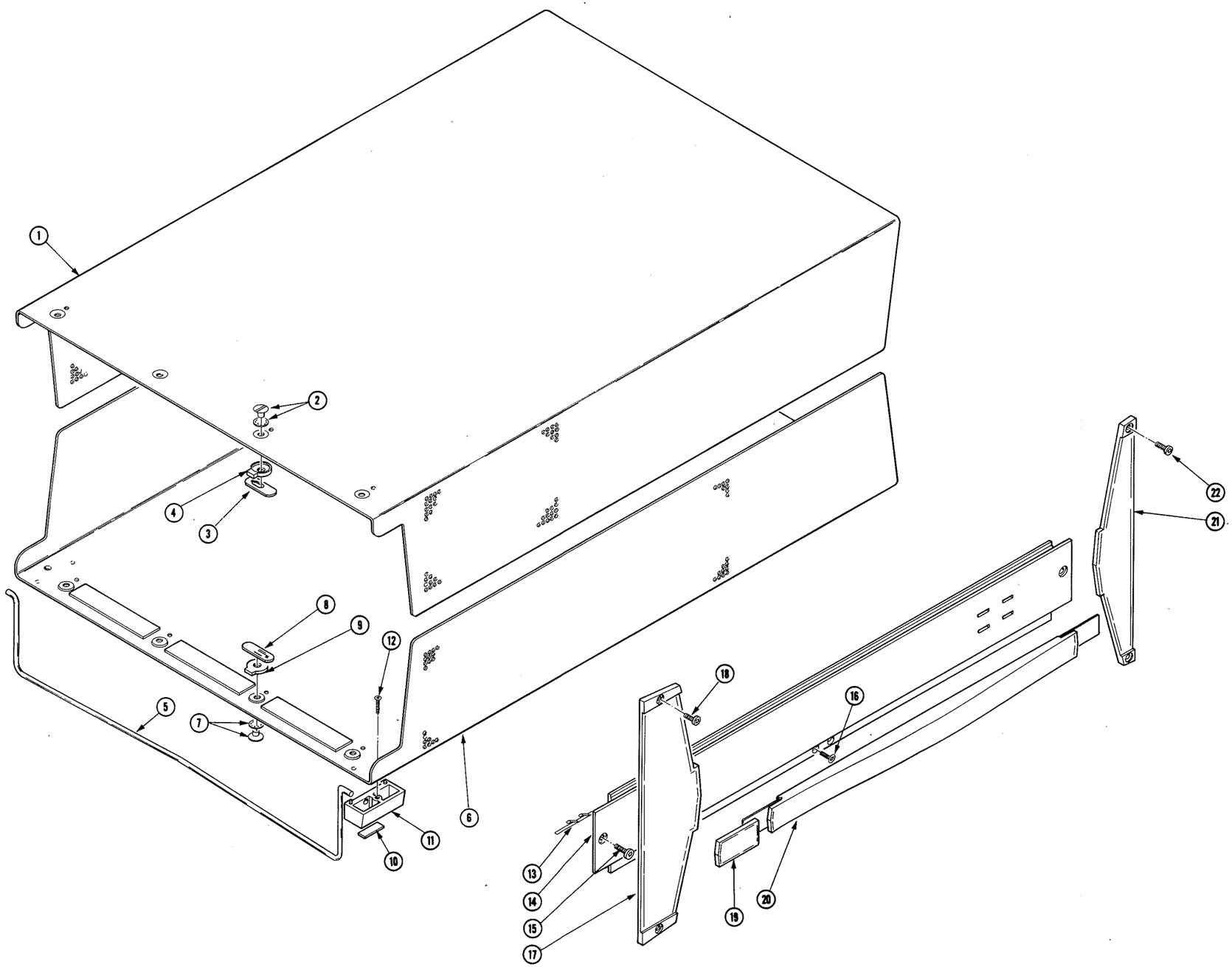

ManualsPlus.com

Fig. 2 Front, Chassis, Rear

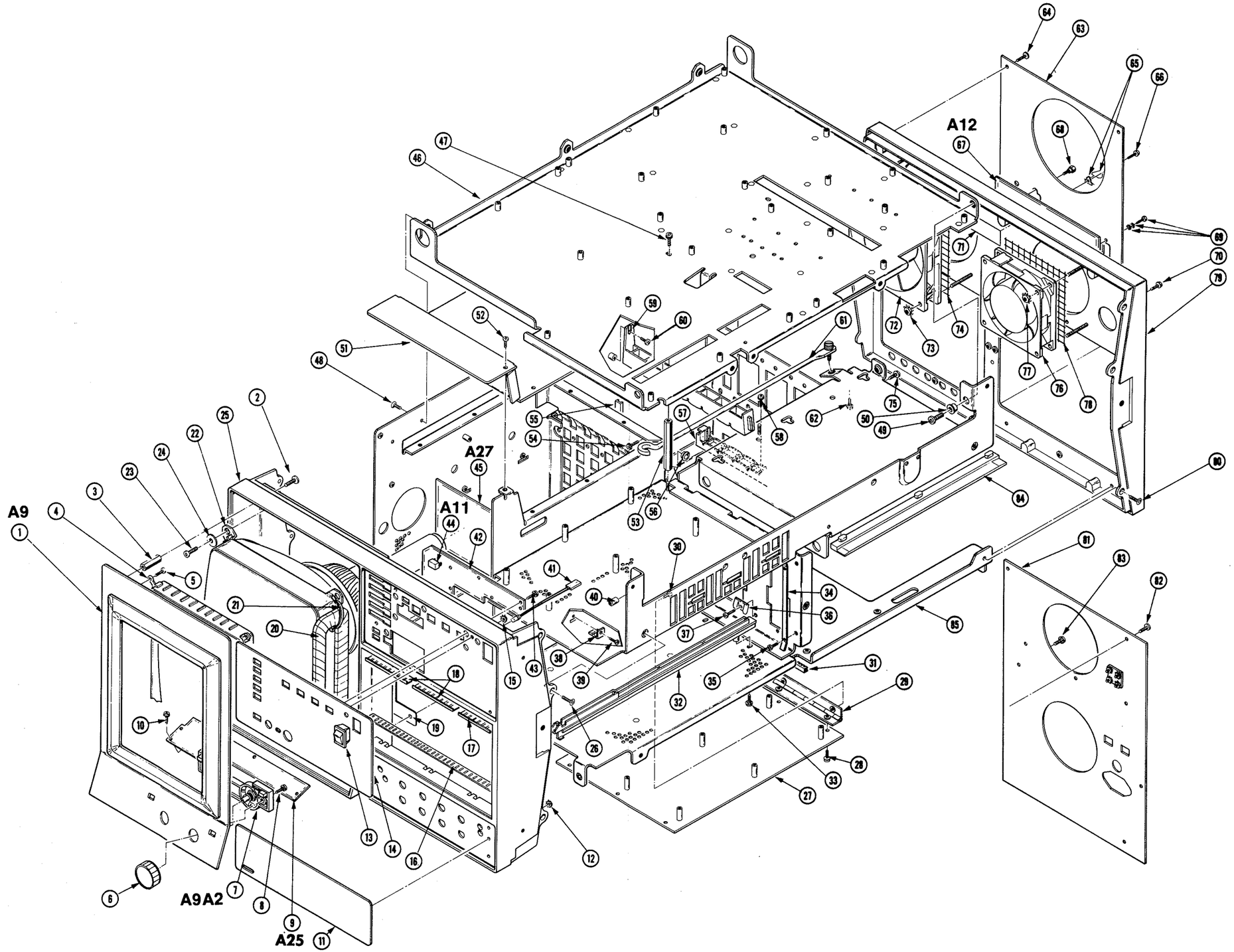

ManualsPlus.com

Fig. & Index No.	Tektronix Part No.	Serial/Assembly No. Effective	Dscont	Qty	12345 Name & Description	Mfr. Code	Mfr. Part No.
2-1	614-0819-00			1	PANEL SUBASSY:TOUCH PANEL	80009	614-0819-00
					(SEE A9, EXCHANGE ITEM)		
					(ATTACHING PARTS)		
-2	211-0721-00			4	SCREW,MACHINE:6-32 X 0.375,PNH,STL	83486	ORDER BY DESCR
					(END ATTACHING PARTS)		
					TOUCH PANEL ASSEMBLY INCLUDES:		
-3	129-1165-00			2	.SPCR,POST:1.9 L,W 6-32 THD BOTH END,A1,HEX	80009	129-1165-00
-4	386-5499-00			1	.DIFFUSER,LIGHT:PLASTIC,7.055 X 5.472	80009	386-5499-00
					(ATTACHING PARTS)		
-5	211-0372-00			4	.SCREW,MACHINE:4-40 X 0.312,PNH,STL	TK1543	B80-00020-003
					(END ATTACHING PARTS)		
-6	366-0582-00			2	.KNOB:ENCODER	TK1546	ORDER BY DESCR
-7	671-0036-00			1	.CIRCUIT BD ASSY:KNOB	80009	671-0036-00
					.(SEE A9A2)		
					(ATTACHING PARTS)		
-8	211-0409-00			2	.SCR,ASSEM WSHR:4-40 X 0.312,PNH,STL	93907	ORDER BY DESCR
					(END ATTACHING PARTS)		
-9	670-9829-00			1	CIRCUIT BD ASSY:DEGAUSS	80009	670-9829-00
					(SEE A25)		
					(ATTACHING PARTS)		
-10	211-0408-00			5	SCR,ASSEM WSHR:4-40 X 0.250,PNH,STL TORX	93907	ORDER BY DESCR
					(END ATTACHING PARTS)		
-11	333-3451-01			1	PANEL,FRONT:DSA601,LOWER	80009	333-3451-01
					(ATTACHING PARTS)		
-12	210-0586-00			4	NUT,PL,ASSEM WA:4-40 X 0.25,STL CD PL	78189	211-041800-00
					(END ATTACHING PARTS)		
-13	260-2349-00			1	SWITCH,ROCKER:SPST,30MA,12V	TK0935	1801.1152
-14	333-3414-00			1	PANEL,FRONT:UPPER,ALUMINUM	80009	333-3414-00
					(ATTACHING PARTS)		
-15	210-0586-00			4	NUT,PL,ASSEM WA:4-40 X 0.25,STL CD PL	78189	211-041800-00
					(END ATTACHING PARTS)		
-16	348-0878-00			1	SHLD GSKT,ELEK:SOLID TYPE,7.646 L	80009	348-0878-00
-17	348-1075-00			1	SHLD GSKT,ELEC:SOUND TYPE,1.66 L	80009	348-1075-00
-18	348-1076-00			2	SHLD GSKT,ELEC:SOLID TYPE,2.28 L	80009	348-1076-00
-19	344-0438-00			1	CLIP,ELEC:CRT GROUNDING,2.5 X 4.5	80009	344-0438-00
-20	108-1383-00			2	COIL,TUBE DEFL:FXD,DEGAUSS R<1.0 OHM	TK2038	108-1383-00
-21	346-0120-00			4	STRAP,TIEDOWN,E:5.5 L MIN,PLASTIC,WHITE	06383	SST1.5M
-22	154-0914-00			1	ELECTRON TUBE:CRT,P31	80009	154-0914-00
					(ATTACHING PARTS)		
-23	211-0721-00			4	SCREW,MACHINE:6-32 X 0.375,PNH,STL	83486	ORDER BY DESCR
-24	210-0949-00			4	WASHER,FLAT:0.141 ID X 0.5 OD X 0.062,BRS	12327	ORDER BY DESCR
					(END ATTACHING PARTS)		
-25	386-5495-01			1	SUBPANEL,FRONT:	80009	386-5495-01
					(ATTACHING PARTS)		
-26	211-0725-00			10	SCREW,MACHINE:6-32 X 0.375,FLH	01536	ORDER BY DESCR
					(END ATTACHING PARTS)		
-27	386-5752-00			1	PLATE,ECB MTG:ALUMINUM	80009	386-5752-00
					(ATTACHING PARTS)		
-28	211-0373-00			6	SCREW,MACHINE:4-40 X 0.25,PNH,STL	80009	211-0373-00
					(END ATTACHING PARTS)		
-29	214-1632-01			1	HINGE,BUTT:7.0 X 1.062,AL	80009	214-1632-01
					(ATTACHING PARTS)		
-30	211-0373-00			3	SCREW,MACHINE:4-40 X 0.25,PNH,STL	80009	211-0373-00
					(END ATTACHING PARTS)		
-31	255-0334-00			2	PLASTIC CHANNEL:12.75 X 0.175 X 0.155,NYLON	11897	122-37-2500
-32	351-0744-00			3	GUIDE,PLUG-IN:POLYAMIDE	80009	351-0744-00
					(ATTACHING PARTS)		
-33	211-0711-00			3	SCR,ASSEM WSHR:6-32 X 0.25,PNH,STL,TORX,T15	01536	ORDER BY DESCR
					(END ATTACHING PARTS)		
-34	131-0800-03			2	CONTACT,ELEC:PLUG-IN GND,BE NI HT TR	80009	131-0800-03
					(ATTACHING PARTS)		
-35	211-0373-00			4	SCREW,MACHINE:4-40 X 0.25,PNH,STL	80009	211-0373-00
					(END ATTACHING PARTS)		
-36	131-0799-00			4	CONTACT,ELEC:PLUG-IN GND,BE NI CD PL	80009	131-0799-00
					(ATTACHING PARTS)		
-37	211-0373-00			4	SCREW,MACHINE:4-40 X 0.25,PNH,STL	80009	211-0373-00
					(END ATTACHING PARTS)		
-38	344-0131-00			4	CLIP,SPR TNSN:CKT BOARD MT,ACETAL BLACK	80009	344-0131-00

ManualsPlus.com

Fig. & Index No.	Tektronix Part No.	Serial/Assembly No. Effective	Dscont	Qty	12345 Name & Description	Mfr. Code	Mfr. Part No.
2-					(ATTACHING PARTS)		
-39	211-0373-00			4	SCREW,MACHINE:4-40 X 0.25,PNH,STL	80009	211-0373-00
					(END ATTACHING PARTS)		
-40	129-0220-00			1	SPACER,POST:0.281 L,6-32 THRU,ACETAL	80009	129-0220-00
-41	150-0121-05			1	LAMP,CARTRIDGE:5V,0.06A,GREEN LENS	80009	150-0121-05
-42	670-9830-00			1	CIRCUIT BD ASSY:FRONT PANEL BUTTON	80009	670-9830-00
					(SEE A11)		
					(ATTACHING PARTS)		
-43	211-0408-00			7	SCR,ASSEM WSHR:4-40 X 0.250,PNH,STL TORX	93907	ORDER BY DESCR
					(END ATTACHING PARTS)		
-44	366-0600-00			10	PUSH BUTTON:0.269 X 0.409,ABS	80009	366-0600-00
-45	670-9825-00			1	CIRCUIT BD ASSY:CRT SOCKET	80009	670-9825-00
					(SEE A27)		
-46	441-1769-01			1	CHASSIS,PLATE:ALUMINUM	80009	441-1769-01
					(ATTACHING PARTS)		
-47	211-0722-00			2	SCREW,MACHINE:6-32 X 0.25,PNH,STL	80009	211-0722-00
-48	211-0734-00			6	SCREW,MACHINE:6-32 X 0.25,FLH,100 DEG,STL	83486	ORDER BY DESCR
-49	212-0682-00			1	SCREW,MACHINE:10-32 X 0.5,PNH,STL	TK0858	212-0682-00
-50	358-0717-00			1	BSHG,SLV:0.2 X 0.345 X 0.17 THK,NYL/DELRIN	80009	358-0717-00
					(END ATTACHING PARTS)		
-51	200-3386-01			1	COVER,CRT:ALUMINUM	80009	200-3386-01
					(ATTACHING PARTS)		
-52	211-0373-00			10	SCREW,MACHINE:4-40 X 0.25,PNH,STL	80009	211-0373-00
					(END ATTACHING PARTS)		
-53	129-1168-00			2	SPCR,POST:2.07 L,0.138-32 THD BOTH ENDS,AL,	80009	129-1168-00
					0.250 HEX		
-54	211-0711-00			1	SCR,ASSEM WSHR:6-32 X 0.25,PNH,STL,TORX,T15	01536	ORDER BY DESCR
					(ATTACHING PART TO SOCKET BOARD GND WIRE)		
-55	351-0765-00			16	GUIDE,CKT BOARD:NYLON	30010	29-0124D
-56	358-0729-00			1	BUSHING,SLEEVE:0.250 X 0.080,NYLON	96881	NYLINER 4L1FF
-57	351-0746-00			1	GUIDE,CKT BOARD:NYLON 6.803 L	80009	351-0746-00
					(ATTACHING PARTS)		
-58	211-0711-00			1	SCR,ASSEM WSHR:6-32 X 0.25,PNH,STL,TORX,T15	01536	ORDER BY DESCR
					(END ATTACHING PARTS)		
-59	343-1318-00			2	RTNR,CARD CAGE:CIRCUIT BOARD	80009	343-1318-00
					(ATTACHING PARTS)		
-60	211-0722-00			2	SCREW,MACHINE:6-32 X 0.25,PNH,STL	80009	211-0722-00
					(END ATTACHING PARTS)		
-61	386-5567-00			1	SPRT,PLATFORM:STEEL	80009	386-5567-00
-62	211-0711-00			1	SCR,ASSEM WSHR:6-32 X 0.25,PNH,STL,TORX,T15	01536	ORDER BY DESCR
					(ATTACHING PART TO PWR SPLY GND WIRE)		
-63	386-5501-00			1	PLATE,CONN:STANDARD,ALUMINUM	80009	386-5501-00
					(ATTACHING PARTS)		
-64	211-0721-00			8	SCREW,MACHINE:6-32 X 0.375,PNH,STL	83486	ORDER BY DESCR
					(END ATTACHING PARTS)		
-65	214-2476-00			2	HDW ASSY KIT:BAIL LOCK,ELEC CONN RCPT MTG	00779	552567-3
					(ATTACHING PARTS)		
-66	211-0410-00			2	SCR,ASSEM WSHR:4-40 X 0.437,PNH,STL	93907	ORDER BY DESCR
					(END ATTACHING PARTS)		
-67	671-0013-00			1	CIRCUIT BD ASSY:REAR PANEL	80009	671-0013-00
					(SEE A12, EXCHANGE ITEM)		
					(ATTACHING PARTS)		
-68	129-0774-00			2	SPCR,POST:0.25,4-40 EXT END,BRS,0.25 HEX	80009	129-0774-00
-69	214-3106-00			2	HARDWARE KIT:JACK SOCKET	53387	3341-1S
-70	211-0410-00			1	SCR,ASSEM WSHR:4-40 X 0.437,PNH,STL	93907	ORDER BY DESCR
					(END ATTACHING PARTS)		
-71	334-7307-00			1	MARKER,IDENT:MARKED CAUTION	80009	334-7307-00
-72	119-2600-00			1	FAN,TUBEAXIAL:12V,5.9W,3000 RPM,78 CFM	80009	119-2600-00
					(ATTACHING PARTS)		
-73	210-0457-00			4	NUT,PL,ASSEM WA:6-32 X 0.312,STL CD PL	78189	511-061800-00
					(END ATTACHING PARTS)		
-74	378-0311-00			1	SCREEN,FAN:4.8 X 4.8	80009	378-0311-00
-75	211-0711-00			1	SCR,ASSEM WSHR:6-32 X 0.25,PNH,STL,TORX,T15	01536	ORDER BY DESCR
					(ATTACHING PART FOR REAR PANEL GND WIRE)		
-76	119-2610-00			1	FAN,TUBEAXIAL:12VDC,3.5W,3100 RPM,37 CFM	TK0510	FBH-09A12L
					(ATTACHING PARTS)		
-77	210-0457-00			3	NUT,PL,ASSEM WA:6-32 X 0.312,STL CD PL	78189	511-061800-00
					(END ATTACHING PARTS)		

ManualsPlus.com

Fig. & Index No.	Tektronix Part No.	Serial/Assembly No. Effective	Dscont	Qty	12345 Name & Description	Mfr. Code	Mfr. Part No.
2-78	378-0310-00			1	SCREEN,FAN:3.65 X 3.65	80009	378-0310-00
-79	386-5496-01			1	SUBPANEL,REAR:	80009	386-5496-01
					(ATTACHING PARTS)		
-80	211-0725-00			8	SCREW,MACHINE:6-32 X 0.375,FLH	01536	ORDER BY DESCR
					(END ATTACHING PARTS)		
-81	386-5503-00			1	PLATE,REAR:POWER SUPPLY,ALUMINUM	80009	386-5503-00
					(ATTACHING PARTS)		
-82	211-0721-00			10	SCREW,MACHINE:6-32 X 0.375,PNH,STL	83486	ORDER BY DESCR
-83	211-0730-00			4	SCR,ASSEM WSHR:6-32 X 0.375,PNH,STL CD PL, TORX T15	80009	211-0730-00
					(END ATTACHING PARTS)		
-84	351-0791-00			2	GUIDE,PWR SPLY:POLYCARBONATE	80009	351-0791-00
-85	610-0754-01			1	CHASSIS ASSY:ALUMINUM	80009	610-0754-01

ManualsPlus.com

Fig. & Index No.	Tektronix Part No.	Serial/Assembly No. Effective	Dscont	Qty	12345 Name & Description	Mfr. Code	Mfr. Part No.
3-1	670-9818-00			1	CIRCUIT BD ASSY:CRT DRIVER	80009	670-9818-00
					(SEE A24, EXCHANGE ITEM)		
					(ATTACHING PARTS)		
-2	211-0409-00			11	SCR,ASSEM WSHR:4-40 X 0.312,PNH,STL	93907	ORDER BY DESCR
					(END ATTACHING PARTS)		
					CRT DRIVER BOARD ASSY INCLUDES:		
-3	159-0245-00			1	.FUSE,WIRE LEAD:1A,125V,FAST	75915	R251001T1
-4	670-9687-00			1	CIRCUIT BD ASSY:REGULATOR	80009	670-9687-00
					(SEE A4, EXCHANGE ITEM)		
					(ATTACHING PARTS)		
-5	211-0720-00			3	SCR,ASSEM WSHR:6-32 X 0.50,PNH,STL,TORX,T15	01536	829-09487
-6	211-0738-00			1	SCREW,MACHINE:6-32 X 0.625,PNH,STL	83486	ORDER BY DESCR
					(END ATTACHING PARTS)		
-7	343-0089-00			1	CLAMP,CABLE:0.3 DIA,PLASTIC	80009	343-0089-00
-8	670-9815-00			1	CIRCUIT BD ASSY:PLUG-IN INTERFACE	80009	670-9815-00
					(SEE A1)		
					(ATTACHING PARTS)		
-9	211-0409-00			9	SCR,ASSEM WSHR:4-40 X 0.312,PNH,STL	93907	ORDER BY DESCR
					(END ATTACHING PARTS)		
-10	670-9823-00			1	CIRCUIT BD ASSY:CALIBRATOR	80009	670-9823-00
					(SEE A5, EXCHANGE ITEM)		
					(ATTACHING PARTS)		
-11	211-0408-00			6	SCR,ASSEM WSHR:4-40 X 0.250,PNH,STL TORX	93907	ORDER BY DESCR
-12	210-0586-00			2	NUT,PL,ASSEM WA:4-40 X 0.25,STL CD PL	78189	211-041800-00
					(END ATTACHING PARTS)		
					CALIBRATOR BOARD ASSEMBLY INCLUDES:		
	160-4797-00			1	.MICROCKT,DGTL:MICROCONT,4K BYTES,EPROM,PRGM	80009	160-4797-00
					(U510)		
-13	670-9813-00			1	CIRCUIT BD ASSY:FRONT PANEL CONTROL	80009	670-9813-00
					(SEE A10, EXCHANGE ITEM)		
					(ATTACHING PARTS)		
-14	211-0408-00			2	SCR,ASSEM WSHR:4-40 X 0.250,PNH,STL TORX	93907	ORDER BY DESCR
					(END ATTACHING PARTS)		
-15	670-9826-00			1	CIRCUIT BD ASSY:GEOMETRY	80009	670-9826-00
					(SEE A26)		
					(ATTACHING PARTS)		
-16	211-0408-00			2	SCR,ASSEM WSHR:4-40 X 0.250,PNH,STL TORX	93907	ORDER BY DESCR
					(END ATTACHING PARTS)		
-17	670-8851-00			1	CIRCUIT BD ASSY:MOTHER	80009	670-8851-00
					(SEE A13)		
					(ATTACHING PARTS)		
-18	211-0711-00			6	SCR,ASSEM WSHR:6-32 X 0.25,PNH,STL,TORX,T15	01536	ORDER BY DESCR
					(END ATTACHING PARTS)		
-19	670-9828-00			1	CIRCUIT BD ASSY:MINI MOTHER	80009	670-9828-00
					(SEE A21)		
					(ATTACHING PARTS)		
-20	211-0711-00			3	SCR,ASSEM WSHR:6-32 X 0.25,PNH,STL,TORX,T15	01536	ORDER BY DESCR
					(END ATTACHING PARTS)		
-21	670-9819-00			1	CIRCUIT BD ASSY:DIGITIZER CPU	80009	670-9819-00
					(SEE A19, EXCHANGE ITEM)		
-22	670-9820-00			1	CIRCUIT BD ASSY:DIGITIZER I/O	80009	670-9820-00
					(SEE A20, EXCHANGE ITEM)		
-23	159-0245-00			1	.FUSE,WIRE LEAD:1A,125V,FAST	75915	R251001T1
-24	670-8854-01			1	CIRCUIT BD ASSY:INPUT/OUTPUT	80009	670-8854-01
					(SEE A14, EXCHANGE ITEM)		
-25	159-0245-00			4	.FUSE,WIRE LEAD:1A,125V,FAST	75915	R251001T1
-26	146-0055-00			1	.BATTERY,DRY:3.0V,1200 MAH,LITHIUM	TK0510	BR-2/3A-E2P
-27	671-0851-00			1	CIRCUIT BD ASSY:MAIN PROCESSOR	80009	671-0851-00
					(SEE A17, EXCHANGE ITEM)		
-28	146-0055-00			1	.BATTERY,DRY:3.0V,1200 MAH,LITHIUM	TK0510	BR-2/3A-E2P
-29	671-0385-00			1	CIRCUIT BD ASSY:B.B MEMORY	80009	671-0385-00
					(SEE A18, EXCHANGE ITEM)		
	671-0385-50			1	CIRCUIT BD ASSY:BB MEMORY	80009	671-0385-50
					(SEE A18 OPTION 4C ONLY, EXCHANGE ITEM)		
-30	146-0055-00			1	.BATTERY,DRY:3.0V,1200 MAH,LITHIUM	TK0510	BR-2/3A-E2P
					.(OPTION 4C ONLY)		
-31	671-0852-00			1	CIRCUIT BD ASSY:MEMORY MGT UNIT	80009	671-0852-00
					(SEE A15, EXCHANGE ITEM)		

ManualsPlus.com

Fig. & Index No.	Tektronix Part No.	Serial/Assembly No. Effective	Dscont	Qty	12345 Name & Description	Mfr. Code	Mfr. Part No.
3-32	671-0879-00			1	CIRCUIT BD ASSY:DISPLAY CONTROLLER (SEE A16, EXCHANGE ITEM)	80009	671-0879-00
-33	159-0245-00			1	.FUSE,WIRE LEAD:1A,125V,FAST	75915	R251001T1
-34	670-9831-00			1	CIRCUIT BD ASSY:WAVE FORM PROCESSOR (SEE A8, EXCHANGE ITEM)	80009	670-9831-00
	670-9827-00			1	CIRCUIT BD ASSY:SIGNAL PROCESSOR (SEE A8 OPTION 3C ONLY, EXCHANGE ITEM)	80009	670-9827-00
					(ATTACHING PARTS)		
-35	211-0408-00			11	SCR,ASSEM WSHR:4-40 X 0.250,PNH,STL TORX	93907	ORDER BY DESCR
					(END ATTACHING PARTS)		
					SIGNAL PROCESSOR BD ASSY INCLUDES:		
-36	159-0245-00			1	.FUSE,WIRE LEAD:1A,125V,FAST	75915	R251001T1
-37	159-0245-00			1	.FUSE,WIRE LEAD:1A,125V,FAST	75915	R251001T1
-38	670-9822-00			1	CIRCUIT BD ASSY:UPPER ACQUISITION (SEE A7, EXCHANGE ITEM)	80009	670-9822-00
					(ATTACHING PARTS)		
-39	211-0408-00			21	SCR,ASSEM WSHR:4-40 X 0.250,PNH,STL TORX	93907	ORDER BY DESCR
					(END ATTACHING PARTS)		
					UPPER ACQUISITION BD ASSY INCLUDES:		
-40	159-0203-00			1	.FUSE,CARTRIDGE:2A,125V,FAST,SUBMINIATURE	71400	TR/A2
-41	165-2078-00			2	.MIROCKT,HYBRID:TIME INTERPOLATOR	80009	165-2078-00
					(ATTACHING PARTS)		
-42	210-0586-00			8	.NUT,PL,ASSEM WA:4-40 X 0.25,STL CD PL	78189	211-041800-00
					(END ATTACHING PARTS)		
-43	214-3965-00			6	.HEAT SINK,ELEC:DEMUX,ALUMINUM	80009	214-3965-00
					(ATTACHING PARTS)		
-44	214-4034-00			12	.SPRING,HLCPS:0.24 OD X 0.44 L,SST	80009	214-4034-00
					(END ATTACHING PARTS)		
-45	155-0328-00			1	.MICROCKT,DGTL:CLOCK DRIVER	80009	155-0328-00
	155-0340-00			1	.MICROCKT,DGTL:SWEEP CONTROLLER IN 100 PIN	80009	155-0340-00
	155-0341-00			4	.MICROCKT,DGTL:DEMULTIPLEXER IN 100 PIN QUAD . PACK,M464	80009	155-0341-00
-46	426-1352-00			2	.FRAME,MICROCKT:1.75 CM,STEPPED	80009	426-1352-00
					(ATTACHING PARTS)		
-47	211-0391-00			8	.SCREW,MACHINE:2-56 X 0.437,P4,STL CD PL	80009	211-0391-00
					(END ATTACHING PARTS)		
-48	214-4188-00			1	.HEATSINK,ELEC:TRIGGER IC,ALUMINUM	80009	214-4188-00
-49	220-0797-00			4	.NUT,CAPTIVE:2-56 X 0.218 DIA,STL CD PL	46384	CKF2-256
-50	165-2161-00			2	.MICROCKT,DGTL:TRIGGER,H2161	80009	165-2161-00
-51	159-0203-00			1	.FUSE,CARTRIDGE:2A,125V,FAST,SUBMINIATURE	71400	TR/A2
-52	670-9821-00			1	CIRCUIT BD ASSY:LOWER ACQUISITION (SEE A6, EXCHANGE ITEM)	80009	670-9821-00
					(ATTACHING PARTS)		
-53	211-0408-00			18	SCR,ASSEM WSHR:4-40 X 0.250,PNH,STL TORX	93907	ORDER BY DESCR
					(END ATTACHING PARTS)		
					LOWER ACQUISITION BD ASSY INCLUDES:		
-54	214-3964-00			8	.HEAT SINK,ELEC:S/H FLASH,ALUMINUM	80009	214-3964-00
					(ATTACHING PARTS)		
-55	214-4034-00			16	.SPRING,HLCPS:0.24 OD X 0.44 L,SST	80009	214-4034-00
					(END ATTACHING PARTS)		
-56	155-0359-00			4	.MICROCKT,LINEAR:A.D PACKAGED HYBRID	80009	155-0359-00
	155-0342-00			4	.MICROCKT,DGTL:UTILITY CIRCUIT IN 100 PIN .QUAD PACK,465	80009	155-0342-00
					(ATTACHING PARTS)		
-57	211-0411-00			16	.SCR,ASSEM WSHR:4-40 X 0.5,PNH,STL	93907	ORDER BY DESCR
					(END ATTACHING PARTS)		
-58	343-1307-00			4	.RTNR,MICROCKT:2.2 X 1.3 X 0.27, .POLYCARBONATE	80009	343-1307-00
-59	214-3965-00			4	.HEAT SINK,ELEC:DEMUX,ALUMINUM	80009	214-3965-00
					(ATTACHING PARTS)		
-60	214-4034-00			8	.SPRING,HLCPS:0.24 OD X 0.44 L,SST	80009	214-4034-00
					(END ATTACHING PARTS)		
-61	155-0341-00			4	.MICROCKT,DGTL:DEMULTIPLEXER IN 100 PIN QUAD . PACK,M464	80009	155-0341-00
	020-1776-00			1	COMPONENT KIT:DSA602 FIRMWARE	80009	020-1776-00

ManualsPlus.com

Fig. & Index No.	Tektronix Part No.	Serial/Assembly No. Effective	Dscont	Qty	12345 Name & Description	Mfr. Code	Mfr. Part No.
3-					WIRE ASSEMBLIES		
	174-0801-01			1	CABLE ASSY,RF:8,50 OHM COAX,17.0 L (FROM A1J1 TO A6J2) (FROM A1J3 TO A6J4) (FROM A1J5 TO A6J6) (FROM A1J9 TO A6J10)	80009	174-0801-01
	174-0802-01			1	CABLE ASSY,RF:4,50 OHM COAX,33.15 L (FROM A1J7 TO A7J8) (FROM A1J11 TO A7J12)	80009	174-0802-01
	174-0884-00			1	CA ASSY,SP,ELEC:40,28 AWG,11.5 L,RIBBON (FROM A5J29 TO A6J29)	80009	174-0884-00
	174-0885-00			1	CA ASSY,SP,ELEC:50,28 AWG,6.0 L,RIBBON (FROM A15J83 TO A20J83)	80009	174-0885-00
	174-0886-00			2	CA ASSY,SP,ELEC:50,28 AWG,41.5 L,RIBBON (FROM A19J47 TO A8J47, STANDARD ONLY) (FROM A19J48 TO A8J48, STANDARD ONLY)	80009	174-0886-00
	174-1236-00			2	CA ASSY,SP,ELEC:20,28 AWG,25.0 L,RIBBON (FROM A19J47 TO A8J47, OPTION 3C ONLY) (FROM A19J48 TO A8J48, OPTION 3C ONLY)	80009	174-1236-00
	174-0888-00			1	CA ASSY,SP,ELEC:50,28 AWG,15.25 L,RIBBON (FROM A20J28 TO A5J28)	80009	174-0888-00
	174-0898-00			1	CA ASSY,SP,ELEC:34,28 AWG,7.5 L,RIBBON (FROM A10J73 TO A9A1J73)	80009	174-0898-00
	174-1113-00			1	CA ASSY,SP,ELEC:40,28 AWG,7.0 L,RIBBON (FROM A14J78 TO A12J78)	80009	174-1113-00
	174-1126-00			1	CA ASSY,SP,ELEC:4,26 AWG,16.125 L (CRT HARNESS, FROM CRT TO CRT DRIVER BOARD)	80009	174-1126-00
	174-1132-00			1	CA ASSY,SP,ELEC:26 AWG,8.5 L,RIBBON (FROM A1J92 TO A5J92)	80009	174-1132-00
	174-1133-00			1	CA ASSY,SP,ELEC:26 AWG,17.0 L,RIBBON (FROM A7J91 TO A1J91)	80009	174-1133-00
	174-1134-00			1	CA ASSY,SP,ELEC:18 AWG,17.5 L,RIBBON (FROM A4J94 TO A24J94)	80009	174-1134-00
	343-0549-00			1	STRAP,TIEDOWN,E:0.091 W X 4.0 L,ZYTEL	06383	PLT1M
	174-1135-00			1	CA ASSY,SP,ELEC:18 AWG,17.5 L,RIBBON (FROM A4J96 TO A24J96)	80009	174-1135-00
	174-1136-00			1	CA ASSY,SP,ELEC:26 AWG,8.0 L,RIBBON (FROM A24J35 TO A27J35)	80009	174-1136-00
	174-1140-00			1	CA ASSY,SP,ELEC:POWER HARNESS (MAIN POWER HARNESS)	80009	174-1140-00
	343-0549-00			2	STRAP,TIEDOWN,E:0.091 W X 4.0 L,ZYTEL	06383	PLT1M
	174-1141-00			1	CA ASSY,SP,ELEC:4,18 AWG,28.5 L (CARD CAGE HARNESS)	80009	174-1141-00
	343-0549-00			1	STRAP,TIEDOWN,E:0.091 W X 4.0 L,ZYTEL	06383	PLT1M
	174-1246-00			1	CA ASSY,SP,ELEC:4,26 AWG,14.5 L,RIBBON (FROM A27J36 TO A24J36)	80009	174-1246-00
	174-1247-00			1	CA ASSY,SP,ELEC:11,26 AWG,14.5 L,RIBBON (FROM A26J33,J34 TO A24J33,J34)	80009	174-1247-00
	174-1393-00			1	CABLE,SP,ELEC:20,28 AWG,9.5 L,STRD/VINYL (FROM A24J53 TO A16J53)	80009	174-1393-00
	174-1394-00			1	CABLE,SP,ELEC:26,28 AWG,19.5 L,STRD/VINYL (FROM A24J54 TO A16J54)	80009	174-1394-00
	175-9809-00			1	CA ASSY,SP,ELEC:50,3.0 L (FROM A15J79 TO A16J79)	80009	175-9809-00
	175-9814-00			1	CA ASSY,SP,ELEC:34,3.0 L (FROM A14J77 TO A17J77)	80009	175-9814-00
	175-9854-00			1	CA ASSY,SP,ELEC:36,28 AWG,7.0 L (FROM A14J72 TO A10J72)	80009	175-9854-00

ManualsPlus.com

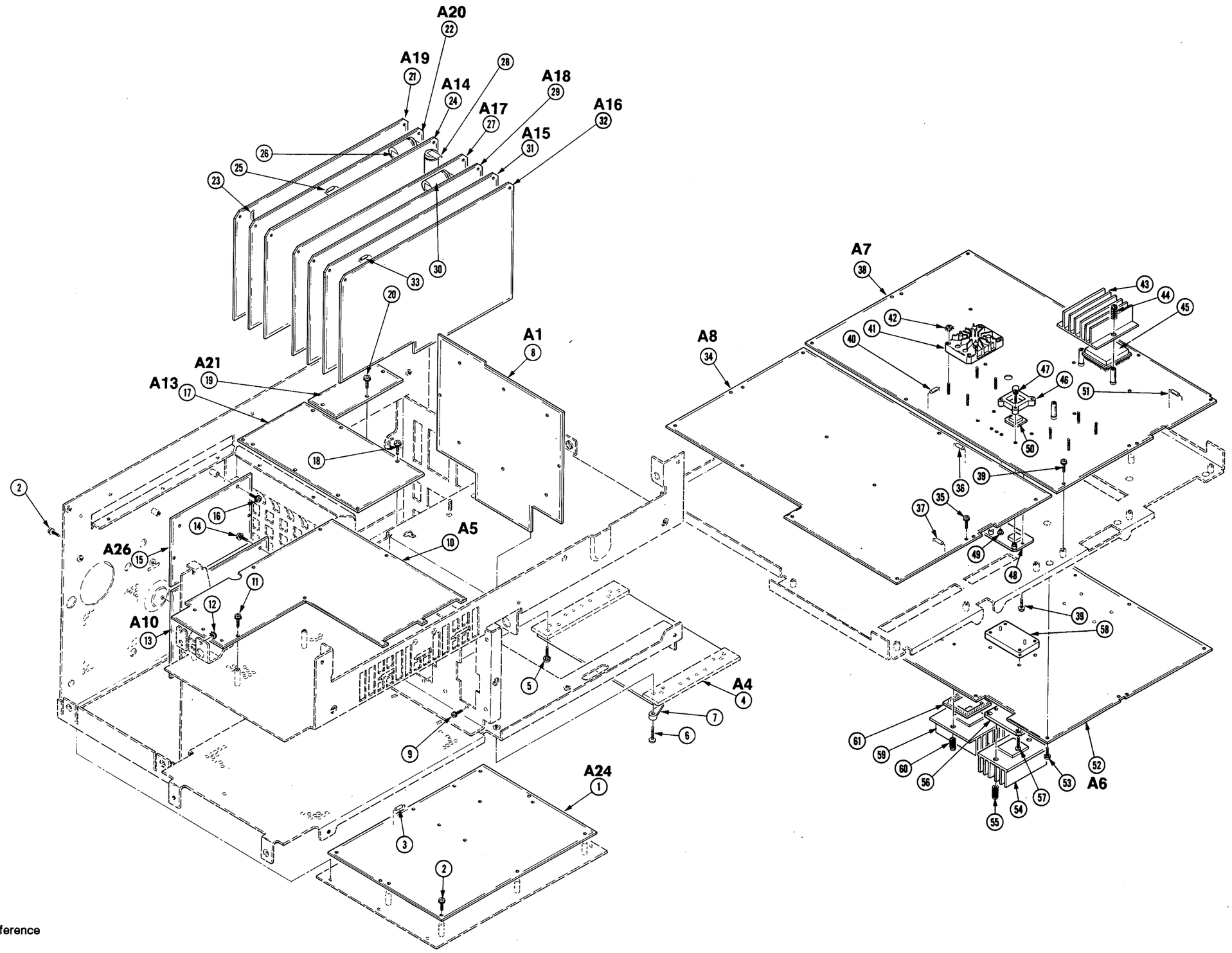

Fig. 3 Circuit Boards

ManualsPlus.com

Fig. 4 Power Supply

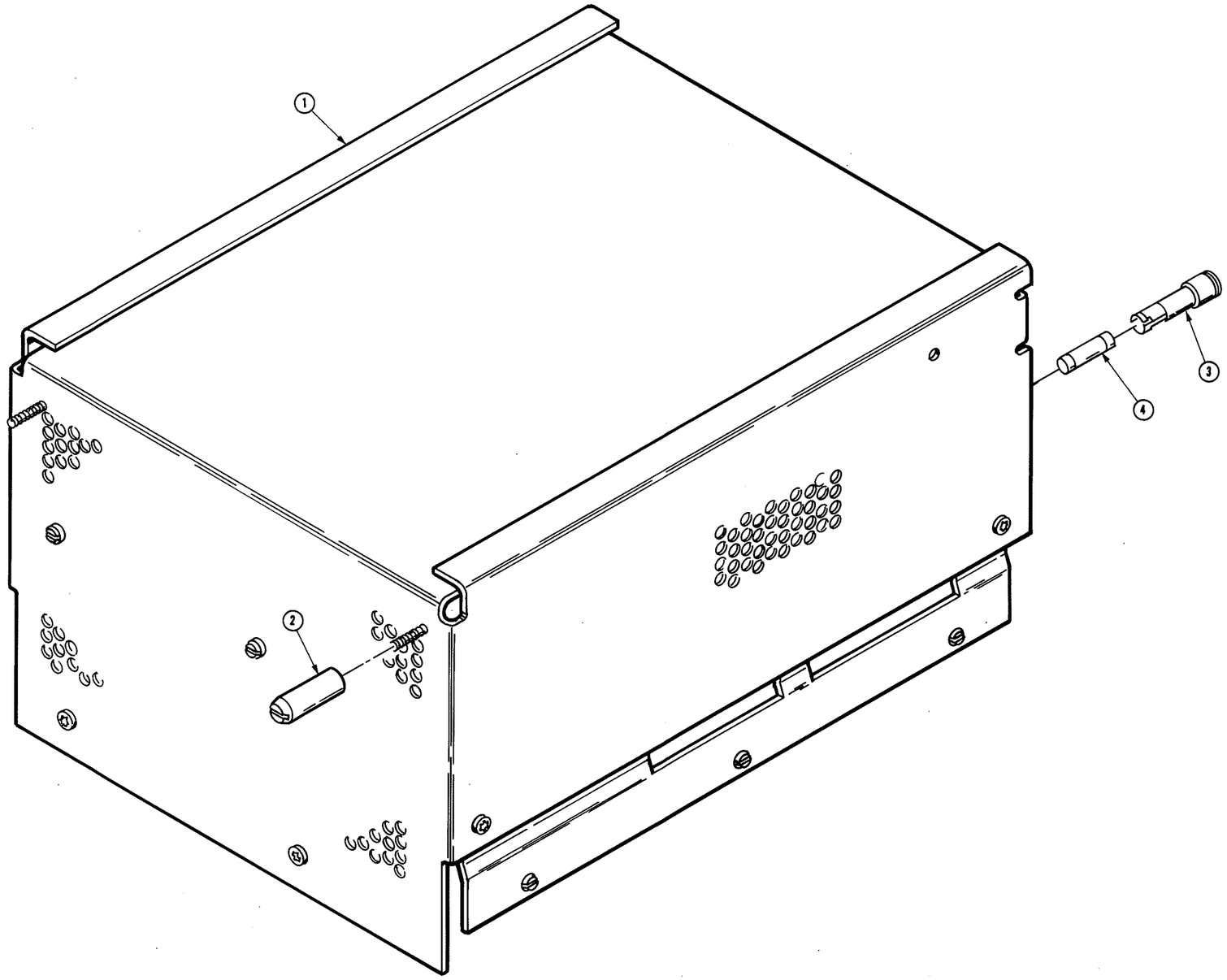

ManualsPlus.com

Fig. & Index No.	Tektronix Part No.	Serial/Assembly No. Effective	Dscont	Qty	12345 Name & Description	Mfr. Code	Mfr. Part No.
4-1	620-0033-00			1	POWER SUPPLY:LBT MAINFRAME (SEE A2, EXCHANGE ITEM)	80009	620-0033-00
-2	214-4082-00			2	.PIN,GUIDE:0.850 L,METAL	80009	214-4082-00
-3	200-2264-00			1	.CAP,FUSEHOLDER:3AG FUSES	S3629	FEK 031 1666
	204-0832-00			1	.BODY,FUSEHOLDER:3AG & 5 X 20MM FUSES	TK0861	031 1673
	119-2610-00			1	.FAN,TUBEAXIAL:12VDC,3.5W,3100 RPM,37 CFM	TK0510	FBH-09A12L
-4	159-0088-00			1	.FUSE,CARTRIDGE:3AG,12A,250V,30SEC,CER	75915	314012
	159-0017-00			1	.FUSE,CARTRIDGE:3AG,4A,250V,FAST BLOW .(F520, PART OF LINE INVERTER BOARD)	71400	MTH-CW-4
	159-0248-00			1	.FUSE,WIRE LEAD:1.5 A,AXIAL LEAD .(F130, PART OF LINE INVERTER BOARD)	75915	R25101.5 T1
	159-0220-00			1	.FUSE,WIRE LEAD:3A,125V,FAST .(F450, PART OF CONTROL RECTIFIER BOARD)	71400	TRA3
					POWER SUPPLY WIRE ASSEMBLIES		
	174-0892-00			1	CA ASSY,SP,ELEC:3,22 AWG,10.0 L,RIBBON (FROM A2A2J80,J81,J82 TO FANS)	80009	174-0892-00
	174-1128-00			1	CA ASSY,SP,ELEC:18 AWG,3.5 L,RIBBON (FROM A2A2J61 TO A4J61)	80009	174-1128-00
	174-1129-00			1	CA ASSY,SP,ELEC:18 AWG,4.0 L,RIBBON (FROM A2A2J62 TO A4J62)	80009	174-1129-00
	174-1130-00			1	CA ASSY,SP,ELEC:26 AWG,3.5 L,RIBBON (FROM A2A2J65 TO A4J65)	80009	174-1130-00
	175-9933-00			1	CA ASSY,SP,ELEC:20,28 AWG,5.15 L,RIBBON (FROM A2A1J70 TO A2A2J70)	80009	175-9933-00
	196-3071-00			1	LEAD,ELECTRICAL:18 AWG,4.0 L,5-4 (GND WIRE, FROM LINE FILTER TO CHASSIS)	80009	196-3071-00
	196-3072-00			1	LEAD,ELECTRICAL:18 AWG,2.0 L,9-N (FROM LINE FILTER TO FUSE HOLDER)	80009	196-3072-00
	196-3074-00			1	LEAD,ELECTRICAL:18 AWG,12.0 L,5-4 (GND WIRE, FROM POWER SUPPLY TO CHASSIS)	80009	196-3074-00
	196-3075-00			2	LEAD,ELECTRICAL:18 AWG,2.0 L,9-N (FROM A2A1W100 TO FUSE HOLDER) (FROM A2A1W110 TO LINE FILTER)	80009	196-3075-00

ManualsPlus.com

Fig. & Index No.	Tektronix Part No.	Serial/Assembly No. Effective	Dscont	Qty	12345 Name & Description	Mfr. Code	Mfr. Part No.
5-							
					OPTION 1C		
-1	386-5502-00			1	PLATE,CONN MTG:OPTIONAL,ALUMINUM	80009	386-5502-00
-2	333-3415-01			1	PANEL,FRONT:DSA601,LOWER	80009	333-3415-01
-3	131-1315-01			16	CONN,RCPT,ELEC:BNC,FEMALE (FRONT AND REAR)	80009	131-1315-01
	012-0208-00			8	CABLE,INTCON:10.0 L	80009	012-0208-00
	174-1139-00			2	CABLE ASSY,RF:4,500 OHM,33.0 L	80009	174-1139-00
					OPTION 3C		
-4	386-5503-00			1	PLATE,REAR:POWER SUPPLY,ALUMINUM (SAME AS STANDARD POWER SUPPLY REAR PLATE EXCEPT REMOVE CONNECTOR OPENING COVER.)	80009	386-5503-00
-5	174-0895-00			1	CA ASSY,SP,ELEC:2,22 AWG,24.75 L,RIBBON (ATTACHING PARTS)	80009	174-0895-00
-6	210-0586-00			4	NUT,PL,ASSEM WA:4-40 X 0.25,STL CD PL (END ATTACHING PARTS)	78189	211-041800-00
-7	131-4309-00			1	CONN,PLUG,ELEC:CIRC BAY LKG,MALE,2 POS	80009	131-4309-00
	670-9827-00			1	CIRCUIT BD ASSY:SIGNAL PROCESSOR (REFER TO FIG.3 CIRCUIT BOARDS, SEE A8)	80009	670-9827-00

ManualsPlus.com

Fig. 5 Options

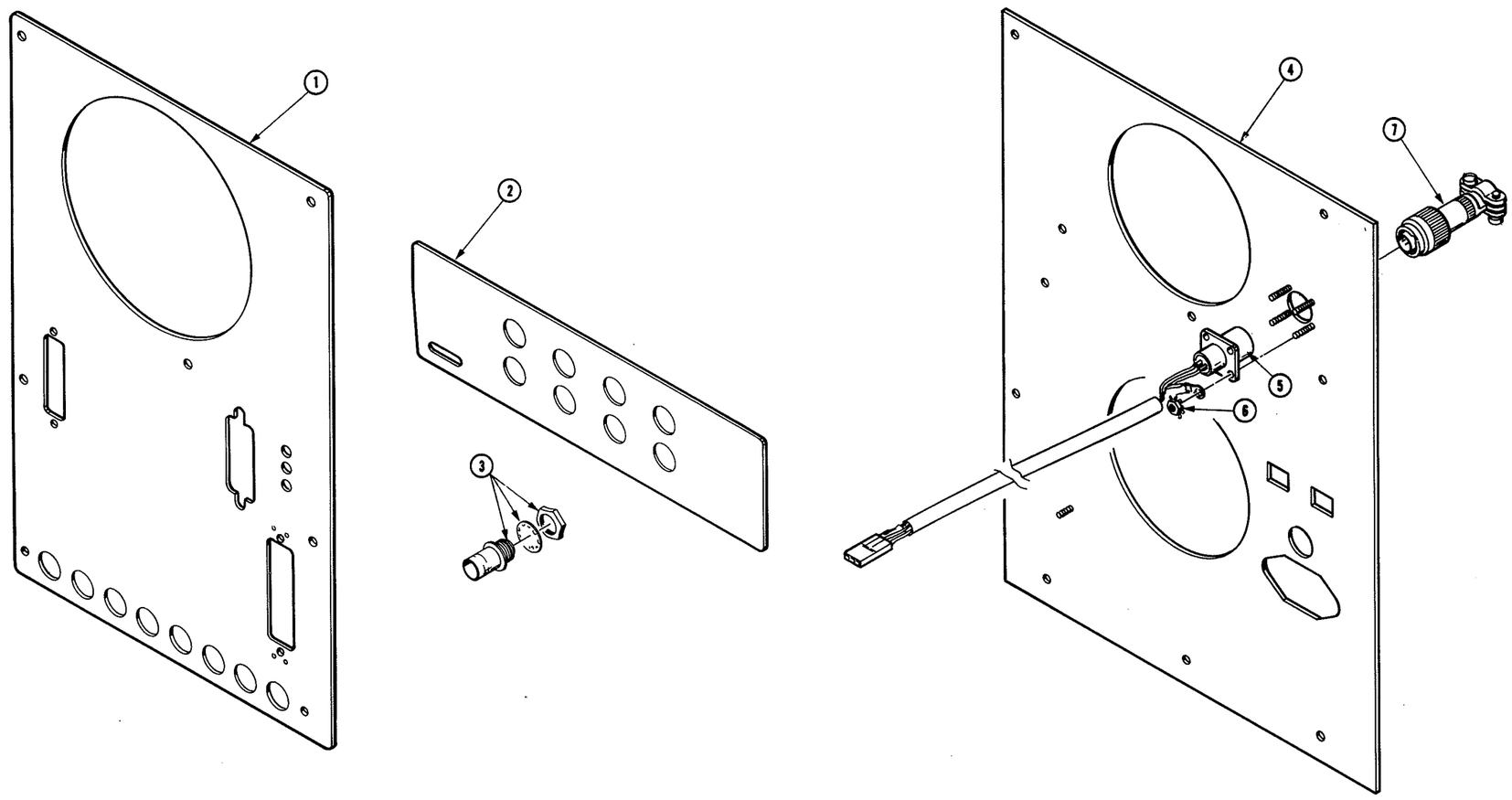

OPTION 1C

OPTION 3C

ManualsPlus.com

Fig. 6 Accessories

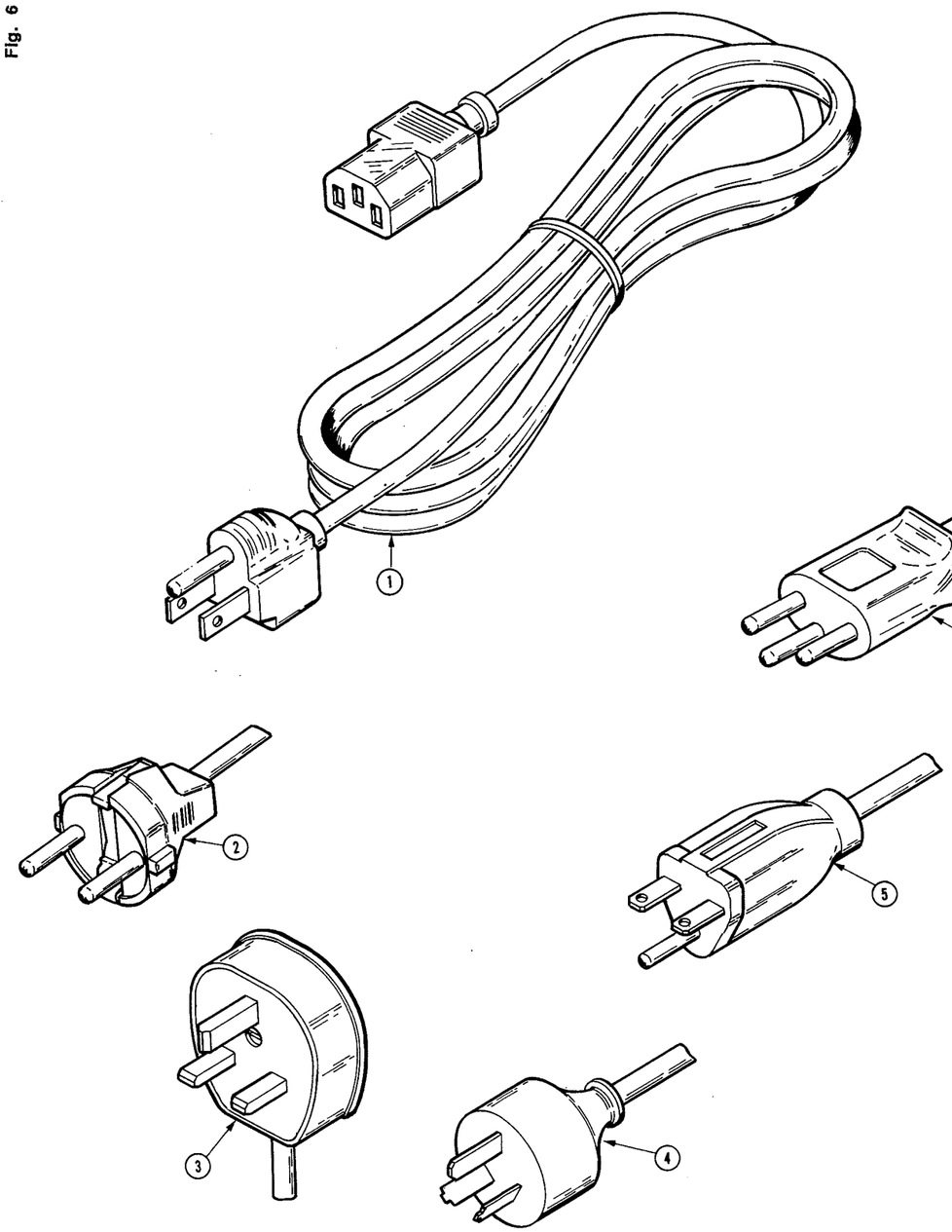

ManualsPlus.com

Fig. & Index No.	Tektronix Part No.	Serial/Assembly No. Effective	Dscont	Qty	12345 Name & Description	Mfr. Code	Mfr. Part No.
6-					STANDARD ACCESSORIES		
-1	161-0066-00			1	CABLE ASSY,PWR,:3,18AWG,115V,98.0 L	16428	CH8481, FH8481
-2	161-0066-09			1	CABLE ASSY,PWR,:3,0.75MM SQ,220V,99.0 L (OPTION A1 ONLY)	S3109	86511000
-3	161-0066-10			1	CABLE ASSY,PWR,:3,0.75MM SQ,240V,96.0 L (OPTION A2 ONLY)	TK1373	24230
-4	161-0066-11			1	CABLE ASSY,PWR,:3,0.75MM,240V,96.0 L (OPTION A3 ONLY)	S3109	ORDER BY DESCR
-5	161-0066-12			1	CABLE ASSY,PWR,:3,18 AWG,250V,99.0 L (OPTION A4 ONLY)	70903	CH-77893
-6	161-0154-00			1	CABLE ASSY,PWR,:3,0.75MM SQ,240V,6A,2.5M L (OPTION A5 ONLY)	S3109	86515000
	013-0195-00			1	ADAPTER,CONN:BNC TO PROBE	80009	013-0195-00
	015-0580-00			1	POCKET SIG GEN:TUTORIAL MANUAL AID	80009	015-0580-00
	070-7249-00			1	MANUAL,TECH:TUTORIAL,DSA601/602	80009	070-7249-00
	070-7250-00			1	MANUAL,TECH:USERS REF,DSA601/602	80009	070-7250-00
	070-7251-00			1	MANUAL,TECH:PRGM REF,DSA601/602	80009	070-7251-00
	070-7252-00			1	MANUAL,TECH:COMMAND REF,DSA601/602	80009	070-7252-00
	070-7254-00			1	MANUAL,TECH:SERVICE REF,DSA601/602	80009	070-7254-00
	070-7529-00			1	MANUAL,TECH:INSTR,DSA600 SERIES (OPTION 1R ONLY)	80009	070-7529-00
					OPTIONAL ACCESSORIES		
	012-0555-00			1	CABLE,INTCON:3 METERS	80009	012-0555-00
	012-0630-03			1	CABLE,INTCON:2.0M L	74868	AC30147-102
	012-0911-00			1	CABLE,INTCON:144.0 L, RS 232	TK6020	ESF-85249
	016-0829-00			1	PANEL,BLANK:PLUG-IN HOUSING,11K SERIES	80009	016-0829-00