ManualsPlus.com

Service Manual

Tektronix

TPS2000 Series
Digital Storage Oscilloscopes

071-1465-00

This document supports firmware version 10.00 and above.

Warning
The servicing instructions are for use by qualified personnel only. To avoid personal injury, do not perform any servicing unless you are qualified to do so. Refer to all safety summaries prior to performing service.

www.tektronix.com

ManualsPlus.com

Copyright © Tektronix, Inc. All rights reserved.

Tektronix products are covered by U.S. and foreign patents, issued and pending. Information in this publication supercedes that in all previously published material. Specifications and price change privileges reserved.

Tektronix, Inc., P.O. Box 500, Beaverton, OR 97077

TEKTRONIX and TEK are registered trademarks of Tektronix, Inc.

ManualsPlus.com

WARRANTY
TPS2000 Series Oscilloscopes

Tektronix warrants that the product listed above will be free from defects in materials and workmanship for a period of three (3) years from the date of original purchase from an authorized Tektronix distributor. If any such product proves defective during this warranty period, Tektronix, at its option, either will repair the defective product without charge for parts and labor, or will provide a replacement in exchange for the defective product. Batteries are excluded from this warranty. Parts, modules and replacement products used by Tektronix for warranty work may be new or reconditioned to like new performance. All replaced parts, modules and products become the property of Tektronix.

In order to obtain service under this warranty, Customer must notify Tektronix of the defect before the expiration of the warranty period and make suitable arrangements for the performance of service. Customer shall be responsible for packaging and shipping the defective product to the service center designated by Tektronix, shipping charges prepaid and with a copy of Customer proof of purchase. Tektronix shall pay for the return of the product to Customer if the shipment is to a location within the country in which the Tektronix service center is located. Customer shall be responsible for paying all shipping charges, duties, taxes, and any other charges for products returned to any other locations.

This warranty shall not apply to any defect, failure or damage caused by improper use or improper or inadequate maintenance and care. Tektronix shall not be obligated to furnish service under this warranty a) to repair damage resulting from attempts by personnel other than Tektronix representatives to install, repair or service the product; b) to repair damage resulting from improper use or connection to incompatible equipment; c) to repair any damage or malfunction caused by the use of non-Tektronix supplies; or d) to service a product that has been modified or integrated with other products when the effect of such modification or integration increases the time or difficulty of servicing the product.

THIS WARRANTY IS GIVEN BY TEKTRONIX WITH RESPECT TO THE PRODUCT IN LIEU OF ANY OTHER WARRANTIES, EXPRESS OR IMPLIED. TEKTRONIX AND ITS VENDORS DISCLAIM ANY IMPLIED WARRANTIES OF MERCHANTABILITY OR FITNESS FOR A PARTICULAR PURPOSE. TEKTRONIX' RESPONSIBILITY TO REPAIR OR REPLACE DEFECTIVE PRODUCTS IS THE SOLE AND EXCLUSIVE REMEDY PROVIDED TO THE CUSTOMER FOR BREACH OF THIS WARRANTY. TEKTRONIX AND ITS VENDORS WILL NOT BE LIABLE FOR ANY INDIRECT, SPECIAL, INCIDENTAL, OR CONSEQUENTIAL DAMAGES IRRESPECTIVE OF WHETHER TEKTRONIX OR THE VENDOR HAS ADVANCE NOTICE OF THE POSSIBILITY OF SUCH DAMAGES.

ManualsPlus.com

WARRANTY
P2220 Probe

Tektronix warrants that the product listed above will be free from defects in materials and workmanship for a period of one (1) year from the date of original purchase from an authorized Tektronix distributor. If any such product proves defective during this warranty period, Tektronix, at its option, either will repair the defective product without charge for parts and labor, or will provide a replacement in exchange for the defective product. Batteries are excluded from this warranty. Parts, modules and replacement products used by Tektronix for warranty work may be new or reconditioned to like new performance. All replaced parts, modules and products become the property of Tektronix.

In order to obtain service under this warranty, Customer must notify Tektronix of the defect before the expiration of the warranty period and make suitable arrangements for the performance of service. Customer shall be responsible for packaging and shipping the defective product to the service center designated by Tektronix, shipping charges prepaid and with a copy of Customer proof of purchase. Tektronix shall pay for the return of the product to Customer if the shipment is to a location within the country in which the Tektronix service center is located. Customer shall be responsible for paying all shipping charges, duties, taxes, and any other charges for products returned to any other locations.

This warranty shall not apply to any defect, failure or damage caused by improper use or improper or inadequate maintenance and care. Tektronix shall not be obligated to furnish service under this warranty a) to repair damage resulting from attempts by personnel other than Tektronix representatives to install, repair or service the product; b) to repair damage resulting from improper use or connection to incompatible equipment; c) to repair any damage or malfunction caused by the use of non-Tektronix supplies; or d) to service a product that has been modified or integrated with other products when the effect of such modification or integration increases the time or difficulty of servicing the product.

THIS WARRANTY IS GIVEN BY TEKTRONIX WITH RESPECT TO THE PRODUCT IN LIEU OF ANY OTHER WARRANTIES, EXPRESS OR IMPLIED. TEKTRONIX AND ITS VENDORS DISCLAIM ANY IMPLIED WARRANTIES OF MERCHANTABILITY OR FITNESS FOR A PARTICULAR PURPOSE. TEKTRONIX' RESPONSIBILITY TO REPAIR OR REPLACE DEFECTIVE PRODUCTS IS THE SOLE AND EXCLUSIVE REMEDY PROVIDED TO THE CUSTOMER FOR BREACH OF THIS WARRANTY. TEKTRONIX AND ITS VENDORS WILL NOT BE LIABLE FOR ANY INDIRECT, SPECIAL, INCIDENTAL, OR CONSEQUENTIAL DAMAGES IRRESPECTIVE OF WHETHER TEKTRONIX OR THE VENDOR HAS ADVANCE NOTICE OF THE POSSIBILITY OF SUCH DAMAGES.

ManualsPlus.com

WARRANTY
TPSBAT Battery Pack

Tektronix warrants that the product listed above will be free from defects in materials and workmanship for a period of three (3) months from the date of original purchase from an authorized Tektronix distributor. If any such product proves defective during this warranty period, Tektronix, at its option, either will repair the defective product without charge for parts and labor, or will provide a replacement in exchange for the defective product. Parts, modules and replacement products used by Tektronix for warranty work may be new or reconditioned to like new performance. All replaced parts, modules and products become the property of Tektronix.

In order to obtain service under this warranty, Customer must notify Tektronix of the defect before the expiration of the warranty period and make suitable arrangements for the performance of service. Customer shall be responsible for packaging and shipping the defective product to the service center designated by Tektronix, shipping charges prepaid, and with a copy of customer proof of purchase. Tektronix shall pay for the return of the product to Customer if the shipment is to a location within the country in which the Tektronix service center is located. Customer shall be responsible for paying all shipping charges, duties, taxes, and any other charges for products returned to any other locations.

This warranty shall not apply to any defect, failure or damage caused by improper use or improper or inadequate maintenance and care. Tektronix shall not be obligated to furnish service under this warranty a) to repair damage resulting from attempts by personnel other than Tektronix representatives to install, repair or service the product; b) to repair damage resulting from improper use or connection to incompatible equipment; c) to repair any damage or malfunction caused by the use of non-Tektronix supplies; or d) to service a product that has been modified or integrated with other products when the effect of such modification or integration increases the time or difficulty of servicing the product.

THIS WARRANTY IS GIVEN BY TEKTRONIX WITH RESPECT TO THE PRODUCT IN LIEU OF ANY OTHER WARRANTIES, EXPRESS OR IMPLIED. TEKTRONIX AND ITS VENDORS DISCLAIM ANY IMPLIED WARRANTIES OF MERCHANTABILITY OR FITNESS FOR A PARTICULAR PURPOSE. TEKTRONIX' RESPONSIBILITY TO REPAIR OR REPLACE DEFECTIVE PRODUCTS IS THE SOLE AND EXCLUSIVE REMEDY PROVIDED TO THE CUSTOMER FOR BREACH OF THIS WARRANTY. TEKTRONIX AND ITS VENDORS WILL NOT BE LIABLE FOR ANY INDIRECT, SPECIAL, INCIDENTAL, OR CONSEQUENTIAL DAMAGES IRRESPECTIVE OF WHETHER TEKTRONIX OR THE VENDOR HAS ADVANCE NOTICE OF THE POSSIBILITY OF SUCH DAMAGES.

ManualsPlus.com

ManualsPlus.com

Table of Contents

General Safety Summary . . . . . **vii**
Service Safety Summary . . . . . **ix**
Preface . . . . . **xi**
Related Manuals xi
Product End-of-Life Handling xii
Contacting Tektronix xiii

Specifications

Operating Information

General Features 2-1
Attach Reference Leads Correctly 2-2
Functional Check 2-3
Self Calibration 2-4
Default Setup 2-4

Theory of Operation

Acquisition Board 3-2
- Acquisition System 3-2
- Processing and Display System 3-3
- Probe Compensation 3-3
- Acquisition Board Power 3-3

Power Supply and Battery System 3-4
Display Module 3-4
Front Panel 3-4
- Two-Channel Oscilloscopes 3-4
- Four-Channel Oscilloscopes 3-5
- LEDs 3-5
- Internal Peripherals 3-5
- External Peripherals 3-5

Performance Verification

Equipment Required 4-1
Test Record 4-2
Performance Verification Procedures 4-3
- Self Test 4-3
- Self Calibration 4-3
- Check DC Gain Accuracy 4-3
- Check Bandwidth 4-5
- Check Sample Rate and Delay Time Accuracy 4-6
- Check Edge Trigger Sensitivity 4-7
- Check External Edge Trigger Sensitivity 4-8

ManualsPlus.com

Adjustment Procedures

Required Equipment 5-1
Adjustment Procedure 5-2
Enable the Service Menu 5-2
Adjustment Procedure 5-4

Maintenance

Preparation 6-1
Preventing ESD 6-1
Inspection and Cleaning 6-2
General Care 6-2
Inspection and Cleaning Procedures 6-2
Removal and Installation Procedures 6-5
Preparation 6-5
List of Modules 6-5
Replacement Procedures 6-5
Tools Required 6-6
Rear Case 6-7
Fan 6-9
Backlight Inverter Board 6-9
IO Board 6-10
Front-Panel Knob 6-11
Front Case 6-11
Acquisition Board 6-14
Front-Panel Board 6-16
Display Module 6-17
Compact Flash Board 6-18
Keypad 6-18
Troubleshooting 6-20
Adjustment After Repair 6-20
Required Tools and Equipment 6-20
Troubleshooting Tree 6-20
PROBE COMP Output 6-25
Using the Error Log 6-25
Repackaging Instructions 6-27
Packaging 6-27
Storage 6-27

Options

Electrical Parts List

Diagrams

ManualsPlus.com

Replaceable Parts

Parts Ordering Information 10-1
Module Servicing 10-1
Using the Replaceable Parts List 10-2
Abbreviations 10-2
Mfr. Code to Manufacturer Cross Index 10-3
Replaceable Accessories 10-8

ManualsPlus.com

List of Figures

Figure 3-1: TPS2000 Series module-level block diagram, remove CH3 and CH4 for a 2-channel version 3-1
Figure 5-1: Adjustment setups 5-3
Figure 6-1: Removing and installing the rear case 6-8
Figure 6-2: Modules accessed from the rear of the oscilloscope 6-10
Figure 6-3: Removing the BNC cover, shell, and retaining nuts 6-11
Figure 6-4: Removing the front case 6-13
Figure 6-5: Using a screwdriver to remove the Acquisition board . 6-15
Figure 6-6: Removing the front-panel module 6-16
Figure 6-7: Removing the display module 6-17
Figure 6-8: Removing and installing the keypad 6-19
Figure 6-9: Oscilloscope troubleshooting tree (1 of 4) 6-21
Figure 6-10: Oscilloscope troubleshooting tree (2 of 4) 6-22
Figure 6-11: Oscilloscope troubleshooting tree (3 of 4) 6-23
Figure 6-12: Oscilloscope troubleshooting tree (4 of 4) 6-24
Figure 9-1: TPS2000 Series block diagram 9-1
Figure 10-1: Exploded view diagram 10-7
Figure 10-2: Replaceable accessories 10-9

ManualsPlus.com

List of Tables

Table i: Instrument user manuals xi
Table ii: Power application user manuals xi
Table 1-1: Oscilloscope general characteristics 1-1
Table 1-2: Oscilloscope display characteristics 1-7
Table 1-3: Oscilloscope physical characteristics 1-7
Table 1-4: Power source characteristics 1-7
Table 1-5: Oscilloscope environmental characteristics 1-8
Table 1-6: Oscilloscope EMC certifications and compliances 1-9
Table 1-7: Oscilloscope safety certifications and compliances 1-10
Table 1-8: Oscilloscope international certifications and compliances 1-10
Table 1-9: P2220 Probe specifications 1-11
Table 1-10: P2220 Probe certifications and compliances 1-12
Table 1-11: P2220 Probe environmental characteristics 1-12
Table 2-1: Oscilloscope General features 2-1
Table 5-1: Required equipment 5-1
Table 5-2: Adjustment steps 5-5
Table 6-1: Internal inspection check list 6-3
Table 6-2: Procedures for module replacement by removing the rear case 6-6
Table 6-3: Procedures for module replacement by removing the front case 6-6
Table 6-4: List of error codes 6-25
Table 10-1: Parts list column descriptions 10-2
Table 10-2: Manufacturers cross index 10-3
Table 10-3: Replaceable parts list 10-4
Table 10-4: Replaceable standard accessories 10-8
Table 10-5: Replaceable optional accessories 10-9

ManualsPlus.com

ManualsPlus.com

General Safety Summary

Review the following safety precautions to avoid injury and prevent damage to this product or any products connected to it.

To avoid potential hazards, use this product only as specified.

Only qualified personnel should perform service procedures.

To Avoid Fire or Personal Injury

Use Proper Power Cord. Use only the power cord specified for this product and certified for the country of use.

Connect and Disconnect Properly. Do not connect or disconnect probes or test leads while they are connected to a voltage source.

Connect and Disconnect Properly. Connect the probe output to the measurement instrument before connecting the probe to the circuit under test. Disconnect the probe input and the probe ground from the circuit under test before disconnecting the probe from the measurement instrument.

Observe All Terminal Ratings. To avoid fire or shock hazard, observe all ratings and markings on the product. Consult the product manual for further ratings information before making connections to the product.

Use Proper Probe. To avoid shock hazard, use a properly rated probe for your measurement.

Floating. Do not float the P2220 probe reference lead to >30 V_{rms}. Use the P5120 (floatable to 600 V_{rms} CAT II or 300 V_{rms} CAT III) or similarly rated, passive, high voltage probe or an appropriately rated, high voltage differential probe when floating the reference lead above 30 V_{rms}, subject to the ratings of such high voltage probe.

Powering Off. The power cord provides Mains disconnect.

Replace Batteries Properly. Replace batteries only with the proper type and rating specified.

Recharge Batteries Properly. Recharge batteries for the recommended charge cycle only.

Use Proper AC Adapter. Use only the AC adapter specified for this product.

Do Not Operate Without Covers. Do not operate this product with covers or panels removed.

Avoid Exposed Circuitry. Do not touch exposed connections and components when power is present.

Do Not Operate With Suspected Failures. If you suspect there is damage to this product, have it inspected by qualified service personnel.

ManualsPlus.com

Environment. Pollution Degree 2[1]. Do not operate in an environment where conductive pollutants may be present. See Appendix A for Environmental characteristics.

Do Not Operate in Wet/Damp Conditions.

Do Not Operate in an Explosive Atmosphere.

Keep Product Surfaces Clean and Dry.

Provide Proper Ventilation. Refer to the manual's installation instructions for details on installing the product so it has proper ventilation.

[1] **As defined in IEC61010-1:2001.**

Symbols and Terms

Terms in this Manual. These terms may appear in this manual:

WARNING. *Warning statements identify conditions or practices that could result in injury or loss of life.*

CAUTION. *Caution statements identify conditions or practices that could result in damage to this product or other property.*

Terms on the Product. These terms may appear on the product:

DANGER indicates an injury hazard immediately accessible as you read the marking.

WARNING indicates an injury hazard not immediately accessible as you read the marking.

CAUTION indicates a hazard to property including the product.

Symbols on the Product. The following symbols may appear on the product:

CAUTION
Refer to Manual

Standby

Chassis Ground

ManualsPlus.com

Service Safety Summary

Only qualified personnel should perform service procedures. Read this *Service Safety Summary* and the *General Safety Summary* before performing any service procedures.

Do Not Service Alone. Do not perform internal service or adjustments of this product unless another person capable of rendering first aid and resuscitation is present.

Disconnect Power. To avoid electric shock, disconnect the main power by means of the power cord or, if provided, the power switch.

Use Care When Servicing With Power On. Dangerous voltages or currents may exist in this product. Disconnect power, remove battery (if applicable), and disconnect test leads before removing protective panels, soldering, or replacing components.

To avoid electric shock, do not touch exposed connections.

ManualsPlus.com

ManualsPlus.com

Preface

This manual provides instructions to verify performance, maintain, and repair TPS2000 Series Digital Storage Oscilloscopes to the module level.

Unless noted otherwise, the term “oscilloscope” refers to all models in the TPS2000 Series.

Related Manuals

Refer the following manuals for additional TPS2000 Series oscilloscope information.

Table i: Instrument user manuals

Language	User manual part number	Programmer manual part number
English	071-1441-XX	071-1075-XX
French	071-1442-XX*	
Italian	071-1443-XX*	
German	071-1444-XX*	
Spanish	071-1445-XX*	
Japanese	071-1446-XX*	
Portuguese	071-1447-XX*	
Simplified Chinese	071-1448-XX*	
Traditional Chinese	071-1449-XX*	
Korean	071-1450-XX*	
Russian	071-1451-XX*	

***These manuals contain a language overlay for the front-panel controls.**

Table ii: Power application user manuals

Language	User manual part number
English	071-1452-XX
French	071-1453-XX
Italian	071-1454-XX
German	071-1455-XX
Spanish	071-1455-XX

ManualsPlus.com

Table ii: Power application user manuals (Cont.)

Language	User manual part number
Japanese	071-1457-XX
Portuguese	071-1458-XX
Simplified Chinese	071-1459-XX
Traditional Chinese	071-1460-XX
Korean	071-1461-XX
Russian	071-1462-XX

Product End-of-Life Handling

Battery Packs. This product contains lithium-ion (Li-Ion) battery packs that should be recycled or disposed of properly in accordance with local laws or regulations. For the location of a local battery recycler in the U.S. or Canada, please contact:

RBRC
Rechargeable Battery Recycling Corp.
P.O. Box 141870
Gainesville, Florida 32614

(800) BATTERY
(800) 227-7379
www.rbrc.com

Components that Contain Mercury. The cold cathode fluorescent tube located in the liquid crystal display backlight contains trace amounts of mercury. When you are ready to reclaim the oscilloscope, you must properly transfer it according to local regulations concerning mercury-containing equipment, or ship the oscilloscope to the Tektronix Recycling Operations (RAMS). You can contact Tektronix for the RAMS shipping address and instructions.

ManualsPlus.com

Contacting Tektronix

Phone	1-800-833-9200*
Address	Tektronix, Inc. Department or name (if known) 14200 SW Karl Braun Drive P.O. Box 500 Beaverton, OR 97077 USA
Web site	www.tektronix.com
Sales support	1-800-833-9200, select option 1*
Service support	1-800-833-9200, select option 2*
Technical support	www.tektronix.com/support 1-800-833-9200, select option 3* 1-503-627-2400 6:00 a.m. – 5:00 p.m. Pacific time

* **This phone number is toll free in North America. After office hours, please leave a voice mail message.**
Outside North America, contact a Tektronix sales office or distributor; see the Tektronix web site for a list of offices.

ManualsPlus.com

ManualsPlus.com

Specifications

These specifications apply to all TPS2000 Series oscilloscopes. To verify that an oscilloscope meets specifications, it must first meet the following conditions:

- The oscilloscope must have been operating continuously for twenty minutes within the specified operating temperature range. See page 1-8.
- You must perform the Do Self Cal operation, accessible through the Utility menu, if the operating temperature changes by more than 5 °C.
- The oscilloscope must be within the factory calibration interval of one year.

Specifications begin in Table 1-1. All specifications are guaranteed unless noted "typical." Specifications that are marked with the ✓ symbol are checked in the chapter *Performance Verification*.

Table 1-1: Oscilloscope general characteristics

Acquisition		
Acquisition Modes	Sample, Peak Detect, and Average	
Acquisition Rate, typical	Up to 180 waveforms per second, per channel (Sample acquisition mode, no measurements)	
Single Sequence	*Acquisition Mode*	*Acquisition Stops After*
	Sample, Peak Detect	Single acquisition, all channels simultaneously.
	Average	N acquisitions, all channels simultaneously, N is selectable from 4, 16, 64, and 128.
Inputs		
Input Coupling	DC, AC, or GND	
Input Impedance, DC Coupled	1 MΩ ±2% in parallel with 20 pF ±3 pF	
P2220 Probe Attenuation	1X, 10X	
Supported Voltage Probe Attenuation Factors	1X, 10X, 20X, 50X, 100X, 500X, 1000X	
Supported Current Probe Scales	1 mV/A, 10 mV/A, 20 mV/A, 50 mV/A, 100mV/A, 200 mV/A, 1 V/A, 5 V/A	

ManualsPlus.com

Table 1-1: Oscilloscope general characteristics (Cont.)

Inputs		
Maximum Voltage Between Signal and Reference at input BNC	*Overvoltage Category*[1]	*Maximum Voltage*
	CAT I and CAT II	300 V_{rms}
	CAT III	150 V_{rms}
	Derate at 20 dB/decade above 100 kHz to 13 V peak AC at 3 MHz and above.	
	For nonsinusoidal waveforms, peak value must be less than 450 V. Excursion above 300 V should be less than 100 ms duration.	
	RMS signal level, including any DC component removed through AC coupling, must be limited to 300 V.	
	If these values are exceeded, damage to the oscilloscope may result.	
Maximum Voltage Between BNC Reference and Earth Ground	600 V_{rms} CAT II or 300 V_{rms} CAT III, using rated connectors or accessories.	
Channel-to-Channel Common Mode Rejection, typical	Greater than 1000:1 up to 50 MHz, derated to 400:1 at 200 MHz	
	Sine wave with VOLTS/DIV setting at 5 mV. Signal applied between the channel (signal and signal reference) and chassis. Ratio of the acquired signal amplitude to the amplitude of the signal.	
Channel-to-Channel Crosstalk	*TPS2012 and TPS2014*	*TPS2024*
	50 MHz: ≥100:1	100 MHz: ≥100:1
	Measured on one channel, with test signal applied between signal and common of the other channel, and with the same VOLTS/DIV and coupling settings on each channel.	

[1] **Refer to the Overvoltage Category description on page 1-10.**

ManualsPlus.com

Table 1-1: Oscilloscope general characteristics (Cont.)

Vertical		
Digitizers	8-bit resolution (except when set to 2 mV/div), each channel sampled simultaneously.	
VOLTS/DIV Range	2 mV/div to 5 V/div at input BNC	
Position Range	2 mV/div to 200 mV/div, ±2 V >200 mV/div to 5 V/div, ±50 V	
✓ Analog Bandwidth in Sample and Average modes at BNC or with P2220 probe set to 10X, DC Coupled	*TPS2012 and TPS2014*	*TPS2024*
	100 MHz[1]	200 MHz[1] (5 mV/div bandwidth is 200 MHz, typical) 10 mV/div bandwidth is 200 MHz from 0 °C to 40 °C ambient. Derated to 160 MHz at 50 °C.
	20 MHz when vertical scale is set to less than 5 mV.	
Analog Bandwidth in Peak Detect mode (50 s/div to 5 µs/div[2]), typical	75 MHz[1]	
	20 MHz when vertical scale is set to less than 5 mV	
Selectable Analog Bandwidth Limit, typical	20 MHz	
Lower Frequency Limit, AC Coupled	≤10 Hz at BNC ≤1 Hz when using a 10X passive probe	
Rise Time at BNC, typical	*TPS 2012 and TPS2014*	*TPS2024*
	< 3.5 ns	< 2.1 ns
Peak Detect Response[2]	Captures 50% or greater amplitude of pulses ≥12 ns wide typical (50 s/div to 5 µs/div) in the center 8 vertical divisions	
✓ DC Gain Accuracy	±3% for Sample or Average acquisition mode, 5 V/div to 10 mV/div	
	±4% for Sample or Average acquisition mode, 5 mV/div and 2 mV/div	
✓ DC Measurement Accuracy, Average Acquisition Mode	*Measurement Type*	*Accuracy*
	Average of ≥16 waveforms with vertical position at zero	±(3% × reading + 0.1 div + 1 mV) when 10 mV/div or greater is selected
	Average of ≥16 waveforms with vertical position not at zero	±[3% × (reading + vertical position) + 1% of vertical position + 0.2 div] Add 2 mV for settings from 2 mV/div to 200 mV/div Add 50 mV for settings from >200 mV/div to 5 V/div
Volts Measurement Repeatability, Average Acquisition Mode	Delta volts between any two averages of ≥16 waveforms acquired under same setup and ambient conditions	±(3% × reading + 0.05 div)

1 **When vertical scale is set to ≥ 5 mV.**

2 **The oscilloscope reverts to Sample mode when the SEC/DIV (horizontal scale) is set from 2.5 µs/div to 5 ns/div on 100 MHz models, or from 2.5 µs/div to 2.5 ns/div on a TPS2024 model. The Sample mode can still capture 12 ns glitches.**

ManualsPlus.com

Table 1-1: Oscilloscope general characteristics (Cont.)

Horizontal			
Sample Rate Range	*TPS2012 and TPS2014*	*TPS2024*	
	5 S/s to 1 GS/s	5 S/s to 2 GS/s	
Waveform Interpolation	(sin x)/x		
Record Length	2500 samples for each channel		
SEC/DIV Range	*TPS2012 and TPS2014*	*TPS2024*	
	5 ns/div to 50 s/div, in a 1, 2.5, 5 sequence	2.5 ns/div to 50 s/div, in a 1, 2.5, 5 sequence	
✓ Sample Rate and Delay Time Accuracy	±50 ppm over any ≥1 ms time interval		
Delta Time Measurement Accuracy (Full Bandwidth)	*Conditions*	*Accuracy*	
	Single-shot, sample mode	±(1 sample interval + 100 ppm × reading + 0.6 ns)	
	>16 averages	±(1 sample interval + 100 ppm × reading + 0.4 ns)	
	Sample interval = s/div ÷ 250		
Position Range	2.5 ns/div to 10 ns/div: (-4 div × s/div) to 20 ms		
	25 ns/div to 100 μs/div: (-4 div × s/div) to 50 ms		
	250 μs/div to 10 s/div: (-4 div × s/div) to 50 s		
	25 s/div to 50s/div: (-4 div × s/div) to 250 s		
Trigger			
✓ Trigger Sensitivity, Edge Trigger Type	*Coupling*	*Sensitivity*	
	DC	CH1, CH2, CH3[1], CH4[1]	1 div from DC to 10 MHz, 1.5 div from 10 MHz to Full BW
		EXT	1 V from 50 Hz to full BW
		EXT/5	5 V from 50 Hz to full BW
		EXT/10	10 V from 50Hz to full BW
Trigger Sensitivity, Edge Trigger Type, typical	*Coupling*	*Sensitivity*	
	AC	Same as DC-coupled limits from 50 Hz and above	
	NOISE REJ	Reduces the DC-coupled trigger sensitivity by 2 times for greater than 10 mv/div to 5 V/div	
	HF REJ	Same as the DC-coupled limit from DC to 7 kHz, attenuates signals above 80 kHz	
	LF REJ	Same as the DC-coupled limits for frequencies above 300 kHz, attenuates signals below 300 kHz	

[1] **Available only on 4-channel oscilloscopes.**

ManualsPlus.com

Table 1-1: Oscilloscope general characteristics (Cont.)

Trigger		
Trigger Level Range	*Source*	*Range*
	CH1, CH2, CH3[1], CH4[1]	±8 divisions from center of screen
	EXT	±4 V
	EXT/5	±20 V
	EXT/10	±35 V
Trigger Level Accuracy, typical	Accuracies are for signals having rise and fall times ≥20 ns	
	Source	*Accuracy*
	Internal	±0.2 div × volts/div within ±4 divisions from center screen
	EXT	±(6% of setting + 250 mV) for signals less than ±2 V
	EXT/5	±(6% of setting + 500 mV) for signals less than ±10 V
	EXT/10	±(6% of setting + 1 V) for signals less than ±20 V
SET LEVEL TO 50%, typical	Operates with input signals equal to or greater than 50 Hz	
Default Settings, Video Trigger	Coupling is AC and Auto except for a single sequence acquisition	
Sensitivity, Video Trigger Type, typical	Composite video signal	
	Source	*Range*
	Internal	Pk-pk amplitude of 2 divisions
	EXT	±1 V
	EXT/5	±5 V
	EXT/10	±10 V
Signal Formats and Field Rates, Video Trigger Type	Supports NTSC, PAL, and SECAM broadcast systems for any field or any line	
Holdoff Range	500 ns to 10 s	

[1] **Available only on 4-channel oscilloscopes.**

ManualsPlus.com

Table 1-1: Oscilloscope general characteristics (Cont.)

Pulse Width Trigger	
Pulse Width Trigger modes	Trigger when < (Less than), > (Greater than), = (Equal), or ≠ (Not Equal); Positive pulse or Negative pulse.
Pulse Width Trigger Point	*Equal:* The oscilloscope triggers when the trailing edge of the pulse crosses the trigger level. *Not Equal:* If the pulse is narrower than the specified width, the trigger point is the trailing edge. Otherwise, the oscilloscope triggers when a pulse continues longer than the time specified as the Pulse Width. *Less than:* The trigger point is the trailing edge. *Greater than* (also called time-out trigger): The oscilloscope triggers when a pulse continues longer than the time specified as the Pulse Width.
Pulse Width Range	Selectable from 33 ns to 10 s
Pulse Width Resolution	16.5 ns or 1 part per thousand, whichever is larger
Equal Guard Band	t > 330 ns: ±5% ≤ guard band < ±(5.1% + 16.5 ns) t ≤ 330 ns: guard band = ±16.5 ns
Not Equal Guard Band	t > 330 ns: ±5% ≤ guard band < ±(5.1% + 16.5 ns) 165 ns < t ≤ 330 ns: guard band = -16.5 ns/+33 ns t ≤165 ns: guard band = ±16.5 ns
Trigger Frequency Counter	
Readout Resolution	6 digits
Accuracy, typical	±51 ppm including all frequency reference errors and ±1 count errors
Frequency Range	AC coupled, 10 Hz minimum to rated bandwidth.
Signal Source	*Pulse Width/ Edge Trigger:* all available trigger sources. *Frequency Counter* measures trigger source at all times, including when the oscilloscope acquisition is halted due to changes in the run status, or acquisition of a single shot event has completed. *Pulse Width Trigger:* The oscilloscope counts pulses of significant magnitude inside the 250 ms measurement window that qualify as triggerable events, such as narrow pulses in a PWM pulse train if set to < mode and the width is set to a relatively small time. *Edge Trigger:* The oscilloscope counts all edges of sufficient magnitude and correct polarity. *Video Trigger:* The Frequency Counter does not operate.

ManualsPlus.com

Table 1-1: Oscilloscope general characteristics (Cont.)

Measurements	
Cursors Types	Amplitude difference between cursors (ΔV, ΔA, ΔVA) Time difference between cursors (Δt) Reciprocal of Δt in Hertz (1/Δt)
Automatic Measurements	Frequency, Period, Mean, Pk-Pk, Cycle RMS, Min, Max, Rise Time, Fall Time, Pos Width, Neg Width
Probe Compensator Output	
Output Voltage, typical	5 V ±10% into ≥1 MΩ load
Frequency, typical	1 kHz
Adjustment Interval	
The recommended factory calibration interval is one year.	

Table 1-2: Oscilloscope display characteristics

Type	145 mm (5.7 in) diagonal liquid crystal
Resolution	320 x 240 vertical pixels
Brightness	Adjustable
Contrast	Adjustable, temperature compensated
Backlight Intensity[1], typical	60 to 100 cd/m^2

[1] **Available through the display menu.**

Table 1-3: Oscilloscope physical characteristics

Size	Height	160.8 mm (6.33 in)
	Width	336.3 mm (13.24 in)
	Depth	129.5 mm (5.10 in)
Weight, approximate	Instrument only	2.7 kg (6.0 lbs)
	1 battery installed	3.2 kg (7.0 lbs)
	2 batteries installed	3.7 kg (8.0 lbs)

Table 1-4: Power source characteristics

Source Voltage of the AC Adapter	90 to 264 VAC_{rms} from 45 Hz through 66 Hz
Power Consumption	Instrument only: 30 watts max. AC input to AC adapter: 36 watts.

ManualsPlus.com

Table 1-5: Oscilloscope environmental characteristics

Temperature	*Operating*[2]	*Nonoperating*[2]
	0 °C to 50 °C (32 °F to 122 °F)	-40 °C to +71 °C (-40 °F to 159.8 °F)
Humidity	*Operating*[3]	*Nonoperating*[3]
	60% RH: 30 °C to 50 °C (86 °F to 122 °F)	60% RH: 55 °C to 71 °C (131 °F to 160 °F) ≤90% RH[4]: 0 °C to 30 °C (32 °F to 86 °F)
Cooling Method	Forced air, temperature controlled.	
Altitude, Operating and Nonoperating	3,000 m (10,000 ft)	
Random Vibration	*Operating*	*Nonoperating*
	0.31 g_{RMS} from 5 Hz to 500 Hz, 10 minutes on each axis.	2.46 g_{RMS} from 5 Hz to 500 Hz, 10 minutes on each axis.
Mechanical Shock, operating[1]	50 g, 11 ms, half sine	

1 **With one battery pack installed.**

2 **Charge the battery packs within an ambient temperature range of 0 °C to 45 °C (32 °F to 113 °F). Charging battery packs outside of this range can damage cells or cause them to leak.**

3 **The battery packs are rated to operate between -10 °C and +50 °C (-14 °F and +122 °F) with less than 80% relative humidity. Operating outside of this range can cause damage. Battery discharge capacity drops significantly at temperatures below 0 °C (32 °F) and above 45 °C (113 °F).**

4 **Wet bulb.**

ManualsPlus.com

Table 1-6: Oscilloscope EMC certifications and compliances

European Union	Meets the intent of Directive 89/336/EEC for Electromagnetic Compatibility. Compliance was demonstrated to the following specifications as listed in the Official Journal of the European Communities:
	EN 61326, EMC requirements for Class A electrical equipment for measurement, control, and laboratory use[1,2]
	IEC 61000-4-2, Electrostatic discharge immunity (Performance criterion B)
	IEC 61000-4-3, RF electromagnetic field immunity (Performance criterion A)[3]
	IEC 61000-4-4, Electrical fast transient/burst immunity (Performance criterion B)
	IEC 61000-4-5, Power line surge immunity (Performance criterion B)
	IEC 61000-4-6, Conducted RF immunity (Performance criterion A)[4]
	IEC 61000-4-11, Voltage dips and interruptions immunity (Performance criterion B)
	EN 61000-3-2, AC power line harmonic emissions
European Union	EN 61000-3-3, Flicker
Australia/New Zealand	Meets the intent of Australian EMC Framework as demonstrated to the following specification: AS/NZS 2064.1/2

1 **Emissions that exceed the levels required by this standard may occur when this equipment is connected to a test object.**

2 **To ensure compliance to the standards listed above, attach only high quality shielded cables to this oscilloscope. High quality shielded cables typically are braid and foil types that have low impedance connections to shielded connectors at both ends.**

3 **The increase in trace noise while subjected to a test field (3 V/m over the frequency range 80 MHz to 1 GHz, with 80% amplitude modulation at 1 kHz) is not to exceed 2 major divisions peak-to-peak. Ambient conducted fields may induce triggering when the trigger threshold is offset less than 1 major division from ground reference.**

4 **The increase in trace noise while subjected to a test field (3 V/m over the frequency range 150 kHz to 80 MHz, with 80% amplitude modulation at 1 kHz) is not to exceed 1 major division peak-to-peak. Ambient conducted fields may induce triggering when the trigger threshold is offset less than 0.5 major divisions from ground reference.**

ManualsPlus.com

Table 1-7: Oscilloscope safety certifications and compliances

Certifications	CAN/CSA C22.2 No. 1010.1, 2004. UL61010-1, 2004	
CSA Certified Power Cords	CSA Certification includes the products and power cords appropriate for use in the North America power network. All other power cords supplied are approved for the country of use.	
Pollution Degree	Pollution Degree 2[1]. Do not operate in environments where conductive pollutants may be present.	
Enclosure Rating	IP 30[2]	The rating becomes IP 40[2] when the Compact Flash card and optional application key are installed.
Overvoltage Category	Category:	Examples of Products in this Category:
	CAT III	Distribution-level mains, fixed installation
	CAT II	Local-level mains, appliances, portable equipment
	CAT I	Signal levels in special equipment or parts of equipment, telecommunications, electronics

1 **As defined in IEC 61010-1: 2001.**

2 **As defined in IEC 60529: 2001.**

Table 1-8: Oscilloscope international certifications and compliances

Russian Federation	This product was certified by the GOST ministry of Russia to be in compliance with all applicable EMC regulations.
Peoples Republic of China	This product has received the Chinese Metrology Certification (CMC).

ManualsPlus.com

Table 1-9: P2220 Probe specifications

Electrical characteristics	10X position		1X position
Bandwidth	DC to 200 MHz		DC to 6 MHz
Attenuation Ratio	10:1 ±2%		1:1 ±2%
Compensation Range	15 pF to 25 pF		Compensation is fixed; correct for all oscilloscopes with 1 MΩ input.
Input Resistance	10 MΩ ±3% at DC		1 MΩ ±3% at DC
Input Capacitance	13.0 pF to 17.0 pF		80 pF to 110 pF
Rise Time, typical	< 2.2 ns		< 50.0 ns
Maximum Input Voltage[1] Between Tip (Signal) and Reference Lead	10X position	300 V_{rms} CAT II or 300 V DC CAT II 150 V_{rms} CAT III or 150 V DC CAT III 420 V peak, <50% DF, <1 s PW 670 V peak, <20% DF, <1 s PW	
	1X position	150 V_{rms} CAT II or 150 V DC CAT II 100 V_{rms} CAT III or 100 V DC CAT III 210 V peak, <50% DF, <1 s PW 330 V peak, <20% DF, <1 s PW	
	300 V_{rms}; derate at 20 dB/decade above 900 kHz to 13 V peak AC at 3 MHz and above. For nonsinusoidal waveforms, peak value must be less than 450 V.		
	Excursion above 300 V should be less than 100 ms duration. RMS signal level, including any DC component removed through AC coupling, must be limited to 300 V. If these values are exceeded, damage to the instrument may result. Refer to the Overvoltage Category on the next page.		
Maximum Input Voltage[1] Between Tip (Signal) and Earth Ground	10X position	300 V_{rms} CAT II or 300 V DC CAT II 150 V_{rms} CAT III or 150 V DC CAT III 420 V peak, <50% DF, <1 s PW 670 V peak, <20% DF, <1 s PW	
	1X position	150 V_{rms} CAT II or 150 V DC CAT II 100 V_{rms} CAT III or 100 V DC CAT III 210 V peak, <50% DF, <1 s PW 330 V peak, <20% DF, <1 s PW	
Maximum Voltage Between Reference Lead and Earth Ground	30 V_{rms}[2]		

1 **As defined in IEC61010-1: 2001. See certifications and compliances in Table 3.**

2 **The float voltage must be subtracted from the tip-to-earth ground voltage. For example, if the reference lead is floated to 30 V_{rms}, the tip voltage to the reference lead is limited to 270 V_{rms}.**

Table 1-10: P2220 Probe certifications and compliances

ManualsPlus.com

EC Declaration of Conformity	Compliance was demonstrated to the following specification as listed in the Official Journal of the European Communities.	
	Low Voltage Directive 73/23/EEC as amended by 93/68/EEC	
	EN 61010-1 2001	Safety requirements for electrical equipment for measurement, control, and laboratory use.
	EN 61010-2-031 2003	Particular requirements for hand-held probe assemblies for electrical measurement and test.
Overvoltage Category	*Category*	*Examples of Products in this Category*
	CAT III	Distribution-level mains, fixed installation
	CAT II	Local-level mains, appliances, portable equipment
	CAT I	Signal levels in special equipment or parts of equipment, telecommunications, electronics
Pollution Degree	Pollution Degree 2[1] . Do not operate in an environment where conductive pollutants may be present.	
Safety	UL61010-1, 2004 & UL61010B-2-031, 2003 CSA C22.2 No. 1010.1-92 & CAN/CSA C22.2 No. 1010.2.031-94 IEC61010-031: 2001 EN61010-031: 2001	

[1] **As defined in IEC 61010-1:2001.**

Table 1-11: P2220 Probe environmental characteristics

Temperature	*Operating*	*Nonoperating*
	0 °C to 50 °C (32 °F to 122 °F)	-40 °C to 71 °C (-40 °F to +159.8 °F)
Humidity	≤60% relative humidity: 41 °C to 50 °C (105 °F to 122 °F)	
	≤90% relative humidity: 40 °C (104 °F) or below	
Cooling Method	Convection	
Altitude	*Operating*	*Nonoperating*
	10,000 ft (3,000 m)	40,000 ft (15,000 m)

ManualsPlus.com

Operating Information

TPS2000 Series oscilloscopes are two- or four-channel instruments in small, lightweight, bench-top chassis.

In addition to a list of general features, this chapter covers:

- How to perform a brief functional check
- How to use the self-calibration routine
- How to restore factory default settings

For more detailed operating information, refer to your user manual.

General Features

The next table and list describe the general features.

Table 2-1: Oscilloscope General features

Model	Channels	Bandwidth	Sample rate
TPS2012	2	100 MHz	1.0 GS/s
TPS2014	4	100 MHz	1.0 GS/s
TPS2024	4	200 MHz	2.0 GS/s

- Battery powered or line powered
- Two rechargeable battery packs (second battery pack optional)
- Independently isolated channels with no shared common ground
- Floating measurements
- TPS2PWR1 Power Analysis Application software (optional)
- Support for compatible voltage probes and current probes
- Context-sensitive help system
- Color LCD display
- Selectable 20 MHz bandwidth limit
- 2500 point record length for each channel
- Autoset

ManualsPlus.com

- Autoranging for quick set up and hands-free operation
- Probe Check Wizard
- Cursors with readouts
- Trigger frequency readout
- Eleven automatic measurements
- Waveform averaging and peak detection
- Dual time base
- Math functions: +, -, and × operations
- Math Fast Fourier Transform (FFT)
- Pulse Width trigger capability
- Video trigger capability with line-selectable triggering
- External trigger
- Setup and waveform storage
- Removable mass storage
- Variable persistence display
- RS-232 and Centronics ports
- OpenChoice PC Communications software
- User interface in ten user-selectable languages

Attach Reference Leads Correctly

***NOTE**. You must attach the probe reference lead for each channel directly to your circuit. These attachments are required because the oscilloscope channels are electrically isolated; they do not share a common connection. Use the shortest possible reference lead with each probe to maintain good signal fidelity.*

The probe reference lead presents a higher capacitive load to the circuit under test than the probe tip. When taking a floating measurement between two nodes of a circuit, attach the probe reference lead to the lowest impedance or least dynamic of the two nodes.

ManualsPlus.com

Functional Check

Perform this quick functional check to verify that your oscilloscope is operating correctly.

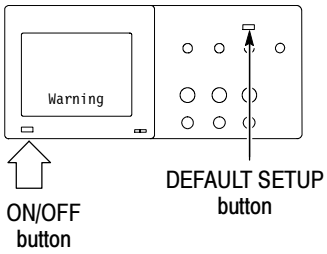

1. Power on the oscilloscope.

   Read the floating measurements warning; then push **OK**. Push the **DEFAULT SETUP** button. The default Voltage Probe Attenuation option is 10X.

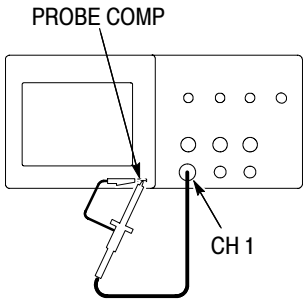

2. Set the switch to 10X on the P2200 probe and connect the probe to channel 1 on the oscilloscope . To do this, align the slot in the probe connector with the key on the CH1 BNC, push to connect, and twist to the right to lock the probe in place.

   Connect the probe tip and reference lead to the PROBE COMP terminals.

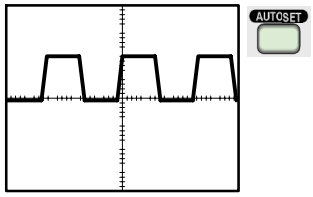

3. Push the **AUTOSET** button. Within a few seconds, you should see a square wave in the display (approximately 5 V at 1 kHz peak-to-peak).

   Push the CH 1 MENU button twice to remove channel 1, push the CH 2 MENU button to display channel 2, repeat steps 2 and 3 above. For 4-channel models, repeat for CH 3 and CH 4.

ManualsPlus.com

Self Calibration

The self-calibration routine lets you quickly optimize the oscilloscope signal path for maximum measurement accuracy. You can run the routine at any time but you should always run the routine if the ambient temperature changes by 5 °C or more.

To compensate the signal path, disconnect any probes or cables from the channel input connectors. Then, press the **UTILITY** button and select the **Do Self Cal** option. Follow the on-screen instructions to proceed.

Default Setup

Check the TPS2000 User Manual for the state of the oscilloscope after you press **DEFAULT SETUP**.

ManualsPlus.com

Theory of Operation

This section describes the electrical operation of the TPS2000 Series oscilloscope to the module level. It describes the basic operation of each functional circuit block shown in Figure 3-1.

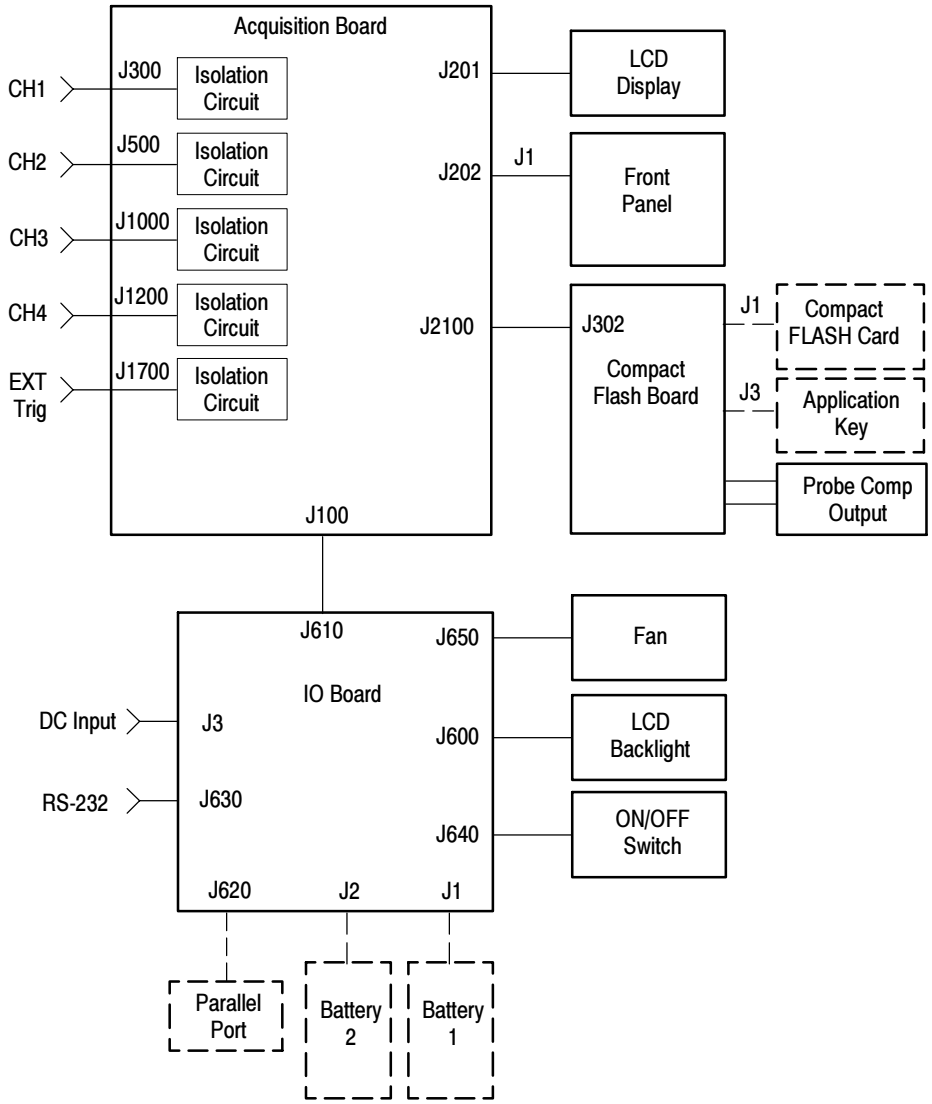

Figure 3-1: TPS2000 Series module-level block diagram, remove CH3 and CH4 for a 2-channel version

ManualsPlus.com

Acquisition Board

The Acquisition board of the TPS2000 Series four-channel oscilloscope is essentially a dual, two-channel oscilloscope tied together through a common microprocessor, and some special interconnects. This allows the combining of the display and trigger systems. For this reason, the focus of the Acquisition board discussion will be on the two-channel system, with differences noted as necessary.

At a minimum, the Acquisition board contains the following components:

- Attenuators
- ASIC amplifier
- Isolation circuit
- Digitizer–trigger system ASIC
- Signal-processing/display/system services ASIC
- RAM
- FLASH ROM
- Microprocessor
- Internal peripheral interface
- Power supplies

For a four-channel oscilloscope, the attenuators and ASICs are duplicated. Most of the other aspects of the circuitry remain unchanged.

Acquisition System

Signals from the CH 1, CH 2, and other input connectors pass through attenuators and an AC-coupling switch to the amplifier ASIC. The EXT TRIG input uses an abbreviated version of this path, without some of the attenuator settings and the AC coupling switch.

The amplifier ASIC contains buffers and variable gain amplifiers, as well as filters that provide 20 MHz bandwidth limiting. The task of the amplifier ASIC is to convert from a 1 MΩ single-ended environment in the input to a much lower impedance differential (and thus less noise-sensitive) environment for the isolation and acquisition process. The amplifier ASIC assures that the input signal is amplified to approximately the correct level to allow the fullest possible use of the isolation circuit and digitizer.

The isolation circuit uses a modulation clock to transfer the input signal across the isolation boundary via an isolation transformer. The input signal is demodu-

ManualsPlus.com

lated and sent to the acquisition ASIC. Control of the amplifier ASIC across the isolation boundary is provided by an optocoupler. Power is provided to each amplifier ASIC and associated circuits by an isolated switching power supply, dedicated to each channel

Each acquisition ASIC contains samplers and peak detectors, an amplifier, an A/D converter, and the trigger logic. The digitized waveform samples are transferred to the processing and display ASIC. In four-channel systems, the two acquisition ASICs are interconnected so that a trigger on one ASIC can produce a trigger on the other.

The processor system adds the microprocessor and FLASH ROM to the processing and display system. The processor system interprets the front-panel control changes detected by the display ASIC, provides control parameters based upon user setting requests, computes waveform measurements, and manages the internal and external peripherals. Saved setups, waveforms, and calibration constants are stored in nonvolatile memory (NVRAM). The processor system shares DRAM with the display system.

Processing and Display System

The processing and display system consists of the display ASIC, DRAM, and system oscillator. Digitized acquisition samples are received by the display ASIC and stored in DRAM. Once data are received by the display ASIC, various corrections are applied, display rasterization is performed, and the waveform is placed into a display buffer. At the same time, the waveform is being read from the display buffers and written to the LCD. Additional circuitry in the display ASIC supports scanning of the front panel, provides DRAM refresh, processes the clock, and performs various memory mapping tasks required by all elementary microprocessor-based systems. In a four-channel system, the two display ASICs are interconnected so that one ASIC may provide display information for the second.

The processing and display system handles some of the computational tasks. Other tasks are performed by the processor system. Since all array processing is performed in the processing and display system, no computations can be performed that involve data from two different channel sets. Thus, subtracting channel 3 data from channel 2 is prohibited.

Probe Compensation

The PROBE COMP and ground terminals are provided for probe adjustment.

Acquisition Board Power

The IO board supplies the Acquisition board with 5.0, 3.0, 3.3, and 15 VDC. These sources are used directly or as sources for other converters on the Acquisition board. The Acquisition board supplies 35 volts used for LCD bias and for series-strings of LEDs on the front panel for button illumination. The LCD bias varies the contrast, and is temperature compensated by a thermistor mounted on the front panel.

ManualsPlus.com

Power Supply and Battery System

The IO board accepts the power input for the oscilloscope from either a 15 VDC external supply or from one of two internal Lithium-Ion battery packs. The battery packs are SMBus compliant and user replaceable.

A microcontroller manages the routing of power from the DC input and the 2 battery packs. It also manages the charging of batteries and communication to the Acquisition board.

The instrument cooling fan is powered by the IO board. The fan can be switched on and off, having its voltage varied by signals from the Acquisition board.

Power for the LCD backlight inverter board is supplied by the IO board. A dimming voltage, derived from a PWM pulse train and RC low-pass filter, controls the brightness of the backlight.

RS-232 and Parallel port signals are passed from the Acquisition board through the IO board to their rear-mounted connectors.

Display Module

The Liquid Crystal Display pattern consists of 320 columns with 3 subcolumns and 240 rows, and has associated drivers and a backlight. The backlight is based upon a 5 mA top-light fluorescent tube.

Front Panel

Two-Channel Oscilloscopes

All switches, position encoders, and LEDs are mounted on the Front Panel board of the two-channel oscilloscope. Additionally, an IC on this board provides buffering and multiplexing of switch signals for the Acquisition board. (Two signals and a sense line are provided by the Acquisition board to support the front panel.) One of these lines resets the scan; a second clocks the scan to the next position; and the sense line receives the current state of the selected switch or encoder position.

For the encoders, some amount of debouncing occurs inside the front-panel IC. All key debouncing is handled in the display ASIC on the Acquisition board.

ManualsPlus.com

Four-Channel Oscilloscopes

The Front Panel board for four-channel oscilloscopes is effectively two front panels in parallel. The left side of the board is largely handled by the display ASIC for channels 1 and 2. The right side of the board is handled by the channel 3 and 4 ASIC. Separate front-panel ICs support these data paths.

LEDs

The front panel contains three LEDs that light to indicate when the Save, Autorange controls , or the multipurpose knob are active. In addition, most buttons have a LED behind them for illumination in low-light conditions. Button illumination can be turned off in the Utility menu.

Internal Peripherals

The Acquisition board includes an FPGA that manages communication between the microprocessor and the internal program memory (FLASH), RTC (Real-Time Clock), battery system, and temperature sensor. The temperature sensor is used for fan control.

External Peripherals

The Acquisition board FPGA also manages communication between the microprocessor and external RS-232 port, Printer Port, and Compact FLASH Card.

ManualsPlus.com

ManualsPlus.com

Performance Verification

This chapter contains performance verification procedures for the specifications marked with the ✓ symbol. The following equipment, or a suitable equivalent, is required to complete these procedures.

Equipment Required

Description	Minimum requirements	Examples
DC Voltage Source	17.5 mV to 7 V, ±0.5% accuracy	Wavetek 9100 Universal Calibration System with Oscilloscope Calibration Module (Option 250) Fluke 5500A Multi-product Calibrator with Oscilloscope Calibration Option (Option 5500A-SC)
Leveled Sine Wave Generator	50 kHz and 200 MHz, ±3% amplitude accuracy	
Time Mark Generator	10 ms period, ±10 ppm accuracy	
50 Ω BNC Cable	BNC male to BNC male, ≈ 1 m (36 in) long	Tektronix part number 012-0482-XX
50 Ω BNC Cable	BNC male to BNC male, ≈ 25 cm (10 in) long	Tektronix part number 012-0208-XX
50 Ω Feedthrough Termination	BNC male and female connectors	Tektronix part number 011-0049-XX
Dual Banana to BNC Adapter	Banana plugs to BNC female	Tektronix part number 103-0090-00
BNC T Adapter	BNC male to dual BNC female connectors	Tektronix part number 103-0030-00

ManualsPlus.com

Test Record

Serial number	Procedure performed by	Date

Test	Passed	Failed
Self Test		

Oscilloscope tests		Low limit	Test result	High limit
Channel 1 DC Gain Accuracy	5 mV/div	33.6 mV		36.4 mV
	200 mV/div	1.358 V		1.442 V
	2 V/div	13.58 V		14.42 V
Channel 2 DC Gain Accuracy	5 mV/div	33.6 mV		36.4 mV
	200 mV/div	1.358 V		1.442 V
	2 V/div	13.58 V		14.42 V
Channel 3 DC Gain Accuracy[1]	5 mV/div	33.6 mV		36.4 mV
	200 mV/div	1.358 V		1.442 V
	2 V/div	13.58 V		14.42 V
Channel 4 DC Gain Accuracy[1]	5 mV/div	33.6 mV		36.4 mV
	200 mV/div	1.358 V		1.442 V
	2 V/div	13.58 V		14.42 V
Channel 1 Bandwidth		2.12 V		—
Channel 2 Bandwidth		2.12 V		—
Channel 3 Bandwidth[1]		2.12 V		—
Channel 4 Bandwidth[1]		2.12 V		—
Sample Rate and Delay Time Accuracy		-2 divs		+2 divs
Channel 1 Edge Trigger Sensitivity		Stable trigger		—
Channel 2 Edge Trigger Sensitivity		Stable trigger		—
Channel 3 Edge Trigger Sensitivity[1]		Stable trigger		—
Channel 4 Edge Trigger Sensitivity[1]		Stable trigger		—
External Edge Trigger Sensitivity		Stable trigger		—

1 Channels 3 and 4 are only on four channel oscilloscopes.

ManualsPlus.com

Performance Verification Procedures

Before beginning these procedures, two conditions must first be met:

- The oscilloscope must have been operating continuously for twenty minutes within the operating temperature range specified in the *Specifications* section on page 1-8.
- You must perform the Self Calibration operation described below. If the ambient temperature changes by more than 5 °C, you must perform the Self Calibration operation again.

The time required to complete the entire procedure is approximately one hour.

WARNING. *Some procedures use hazardous voltages. To prevent electrical shock, always set voltage source outputs to 0 V before making or changing any interconnections.*

Self Test

This internal procedure is automatically performed every time the oscilloscope is powered on. No test equipment or hookups are required. Verify that no error messages are displayed before continuing with this procedure.

Self Calibration

The self calibration routine lets you quickly optimize the oscilloscope signal path for maximum measurement accuracy. You can run the routine at any time, but you should always run the routine if the ambient temperature changes by 5 °C or more.

1. Remove signals from all channels.
2. Press the UTILITY button and select the Do Self Cal option to start the calibration. This routine can take up to five minutes to complete.
3. Verify that self calibration passed.

Check DC Gain Accuracy

This test checks the DC gain accuracy of all input channels.

1. Set the DC voltage source output level to **0 V**.
2. Set up the oscilloscope using the following steps:

Press menu button	Select menu option	Select setting
1. DEFAULT SETUP	—	—
2. CH 1 (or whatever channel is currently being tested).	Voltage Probe	1X

ManualsPlus.com

Press menu button	Select menu option	Select setting
3. ACQUIRE	Average	16
4. MEASURE	Source	An unchecked channel
	Type	Mean

3. As shown below, connect the oscilloscope channel selected in the table to the DC voltage source.

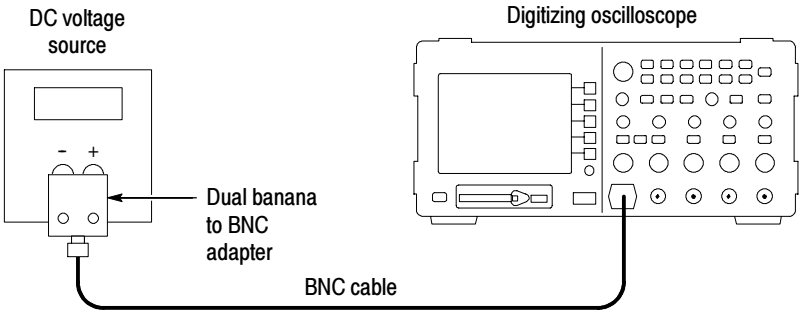

4. For each VOLTS/DIV setting listed below, perform the following steps:

a. Set the DC voltage source output level to the positive voltage listed and then record the mean measurement as V_{pos}.

b. Reverse the polarity of the DC voltage source and then record the mean measurement as V_{neg}.

c. Calculate $V_{diff} = V_{pos} - V_{neg}$ and then compare V_{diff} to the accuracy limits in the table.

VOLTS/DIV setting	DC voltage source output levels	Accuracy limits for V_{diff}
5 mV/div	+17.5 mV, -17.5 mV	33.6 mV to 36.4 mV
200 mV/div	+700 mV, -700 mV	1.358 V to 1.442 V
2 V/div	+7.00 V, -7.00 V	13.58 V to 14.42 V

5. Set DC voltage source output level to **0 V**.

6. Disconnect the test setup.

7. Repeat steps 1 through 6 until all input channels have been checked. For example, check CH1 the first time through and CH2 the next time. On a four-channel model, then test CH3 and CH4.

ManualsPlus.com

Check Bandwidth

This test checks the bandwidth of all input channels.

1. Set up the oscilloscope using the following steps:

Press menu button	Select menu option	Select setting
DEFAULT SETUP	—	—
CH 1 (or whatever channel is currently being tested).	Voltage Probe	1X
ACQUIRE	Average	16
TRIGGER	Coupling	Noise
MEASURE	Source	An unchecked channel
	Type	Pk-Pk

2. As shown below, connect the oscilloscope channel selected in the table to the leveled sine wave generator.

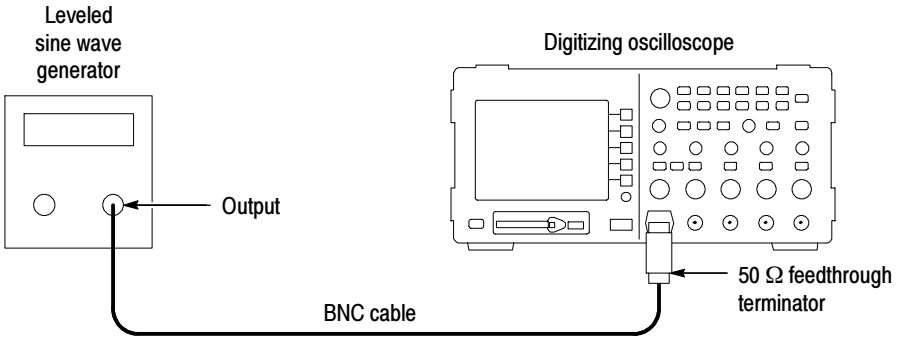

3. Set the oscilloscope VOLTS/DIV to **500 mV/div**.
4. Set the oscilloscope SEC/DIV to **10 µs/div**.
5. Set the leveled sine wave generator frequency to **50 kHz**.
6. Set the leveled sine wave generator output level so the peak-to-peak measurement is between **2.98 V** and **3.02 V**.
7. Set the leveled sine wave generator frequency to:
   - **100 MHz** if you are checking a TPS2012/2014
   - **200 MHz** if you are checking a TPS2024.
8. Set the oscilloscope SEC/DIV to **10 ns/div**.
9. Check that the peak-to-peak measurement is **≥2.12 V**.

ManualsPlus.com

10. Disconnect the test setup.

11. Repeat steps 1 through 10 until all input channels have been checked.

Check Sample Rate and Delay Time Accuracy

This test checks the time base accuracy.

1. Set up the oscilloscope using the following steps:

Press menu button	Select menu option	Select setting
DEFAULT SETUP	—	—
CH 1 (or whatever channel is currently being tested).	Voltage Probe	1X

2. Connect the oscilloscope to the time mark generator as shown below.

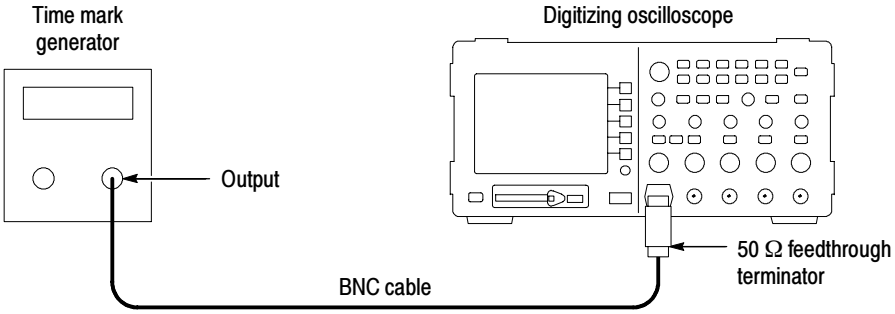

3. Set the time mark generator period to **10 ms**.

4. Set the oscilloscope VOLTS/DIV to **500 mV/div**.

5. Set the oscilloscope Main SEC/DIV to **1 ms/div**.

6. Press **SET LEVEL TO 50%**.

7. Use the vertical POSITION control to center the test signal on screen.

8. Use the horizontal POSITION control to set the position to **10.00 ms**.

9. Set the oscilloscope SEC/DIV to **250 ns/div**.

ManualsPlus.com

10. Check that the rising edge of the marker crosses the center horizontal graticule line within ±2 divisions of center graticule.

***NOTE**. One division of displacement from graticule center corresponds to a 25 ppm time base error.*

11. Disconnect the test setup.

Check Edge Trigger Sensitivity

This test checks the edge trigger sensitivity for all input channels.

1. Set up the oscilloscope using the following steps:

Press menu button	Select menu option	Select setting
DEFAULT SETUP	—	—
CH 1 (or whatever channel is currently being tested).	Voltage Probe	1X
TRIGGER	Mode	Normal
ACQUIRE	Sample	—
MEASURE	Source	An unchecked channel
	Type	Pk-Pk

2. As shown below, connect the oscilloscope channel selected in the table to the leveled sine wave generator.

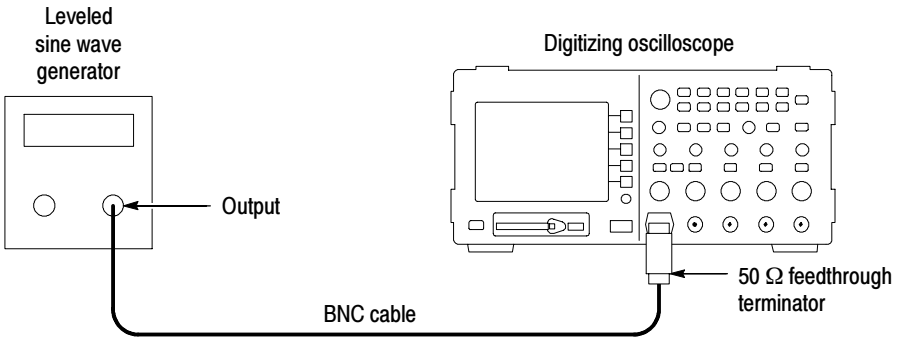

3. Set the oscilloscope VOLTS/DIV to **500 mV/div**.
4. Set the oscilloscope SEC/DIV to **25 ns/div**.

ManualsPlus.com

5. Set the leveled sine wave generator frequency to **10 MHz**.
6. Set the leveled sine wave generator output level to approximately **500 mV$_{p-p}$** so that the measured amplitude is approximately **500 mV**. (The measured amplitude can fluctuate around 500 mV.)
7. Press **SET LEVEL TO 50%**. Adjust **TRIGGER LEVEL** as necessary and then check that triggering is stable.
8. Set the leveled sine wave generator frequency to the following:
   - **100 MHz** if you are checking a TPS2012/2014
   - **200 MHz** if you are checking TPS2024.
9. Set the oscilloscope SEC/DIV to **10 ns/div**.
10. Set the leveled sine wave generator output level to approximately **750 mV$_{p-p}$** so that the measured amplitude is approximately **750 mV**. (The measured amplitude can fluctuate around 750 mV.)
11. Press **SET LEVEL TO 50%**. Adjust **TRIGGER LEVEL** as necessary and then check that triggering is stable.
12. Change the oscilloscope setup using the following step:

Press menu button	Select menu option	Select setting
TRIGGER	Slope	Falling

13. Press **SET LEVEL TO 50%**. Adjust **TRIGGER LEVEL** as necessary and then check that triggering is stable.
14. Disconnect the test setup.
15. Repeat steps 1 through 14 until all input channels have been checked.

Check External Edge Trigger Sensitivity

This test checks the edge trigger sensitivity for the external trigger.

1. Set up the oscilloscope using the following steps:

Press menu button	Select menu option	Select setting
DEFAULT SETUP	—	—
CH 1 (or whatever channel is currently being tested).	Voltage Probe	1X
TRIGGER	Source	Ext
	Mode	Normal

ManualsPlus.com

Press menu button	Select menu option	Select setting
ACQUIRE	Sample	—
MEASURE	Source	CH1
	Type	Pk-Pk

2. Connect the oscilloscope to the leveled sine wave generator as shown below.

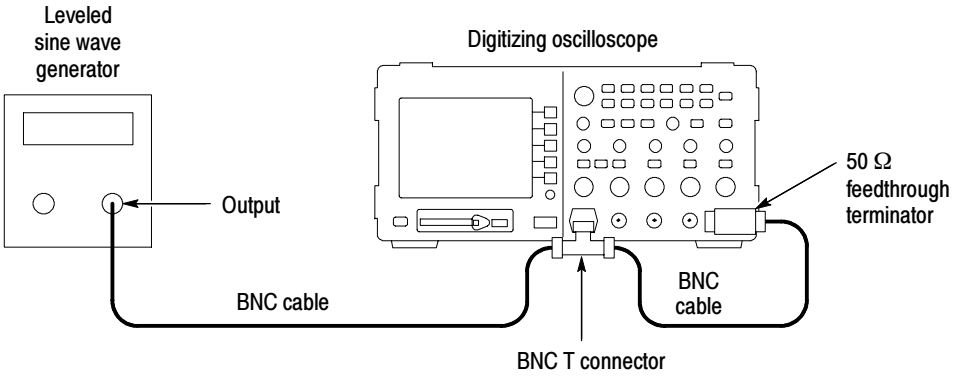

3. Set the leveled sine wave generator frequency to the following:
   - **100 MHz** if you are checking a TPS2012/2014
   - **200 MHz** if you are checking TPS2024.
4. Set the oscilloscope VOLTS/DIV to **500 mV/div**.
5. Set the oscilloscope SEC/DIV to **10 ns/div**.
6. Set the leveled sine wave generator output level to approximately 1 $\mathbf{V_{p\text{-}p}}$ so that the measured amplitude is approximately **1 V**. (The measured amplitude can fluctuate around 1 V.)
7. Press **SET LEVEL TO 50%**. Adjust **TRIGGER LEVEL** as necessary and then check that triggering is stable.
8. Change the oscilloscope setup using the following step:

Press menu button	Select menu option	Select setting
TRIGGER	Slope	Falling

ManualsPlus.com

9. Press **SET LEVEL TO 50%**. Adjust **TRIGGER LEVEL** as necessary and then check that triggering is stable.

10. Disconnect the test setup.

ManualsPlus.com

Adjustment Procedures

This section contains an adjustment procedures for the TPS2000 Series oscilloscopes.

Only qualified personnel should perform service procedures. Read the *Service Safety Summary* and the *General Safety Summary* at the beginning of this manual before performing any service procedures.

***NOTE**. The voltage references inside* TPS2000 Series *oscilloscopes are very stable over time and should not require routine updates. Before performing any procedure in this chapter, first verify that the oscilloscope does not meet specifications. Refer to the chapter* Performance Verification *to verify the specifications.*

Required Equipment

The equipment described in Table 5-1, or a suitable equivalent, is required to complete the procedure.

Table 5-1: Required equipment

Description	Minimum requirements	Examples
DC Voltage Source	-20 V to 20 V, ±0.1% accuracy	Wavetek 9100 Universal Calibration System with Oscilloscope Calibration Module (Option 250) Fluke 5500A Multi-product Calibrator with Oscilloscope Calibration Option (Option 5500A-SC)
Leveled Sine Wave Generator	60 kHz and 200 MHz, ±0.6% amplitude accuracy	
50 Ω BNC Cable	BNC male to BNC male, ≈ 1 m (36 in) long	Tektronix part number 012-0482-00
50 Ω BNC Cable (two)	BNC male to BNC male, ≈ 25 cm (10 in) long	Tektronix part number 012-0208-00
50 Ω Feedthrough Termination	BNC male and female connectors	Tektronix part number 011-0049-01
Dual Banana to BNC Adapter	Banana plugs to BNC female	Tektronix part number 103-0090-00
BNC T	One male and two female BNC connectors	Tektronix part number 103-0030-00

ManualsPlus.com

Adjustment Procedure

The adjustment procedure consists of multiple steps for the two-channel oscilloscope, and additional steps for the four-channel model. Each step requires an external voltage source for new calibration constants.

Before performing the adjustment procedure, you must warm up the oscilloscope for at least ten minutes in an ambient temperature between 20 °C and 30 °C. Adjustments performed prior to warm-up or outside this temperature range may result in poor performance.

If all steps in the procedures are completed successfully, a “Pass” message is displayed and the new calibration constants take affect. If any step fails, the procedure is aborted and the current calibration is not affected. You can choose to abort the procedures at any step by selecting FCAL ABORT without affecting the current calibration.

***NOTE**. While performing the adjustment procedure, keep in mind that some of the steps take a significant amount of time (up to 5 minutes) to complete.*

The equipment setups, shown in Figure 5–1, are required to complete the adjustment procedure. Table 5–2 on page 5–5 lists the steps in the procedure and the signal requirement for each step.

Enable the Service Menu

You must enable the Service menu to perform the adjustment procedure.

1. Power on the oscilloscope.
2. Push the front-panel **MEASURE** button to access the MEASURE menu.
3. Push the top option button to access the Measure 1 menu.
4. Push and hold the front-panel **SINGLE SEQ** button.
5. Push and hold the front-panel **AUTOSET** button.
6. Wait at least two seconds.
7. Release the **SINGLE SEQ** button.
8. Release the **AUTOSET** button. A message appears in the lower left corner of the screen stating “Service mode ON.”
9. Push the front-panel **UTILITY** button. The last item in the Utility menu is now Service.

You may now begin executing the sequence of calibration steps required by your oscilloscope and shown below. After the adjustment is complete, disable the Service menu by pushing the UTILITY front-panel button, and the Service and Service Mode Off option buttons.

ManualsPlus.com

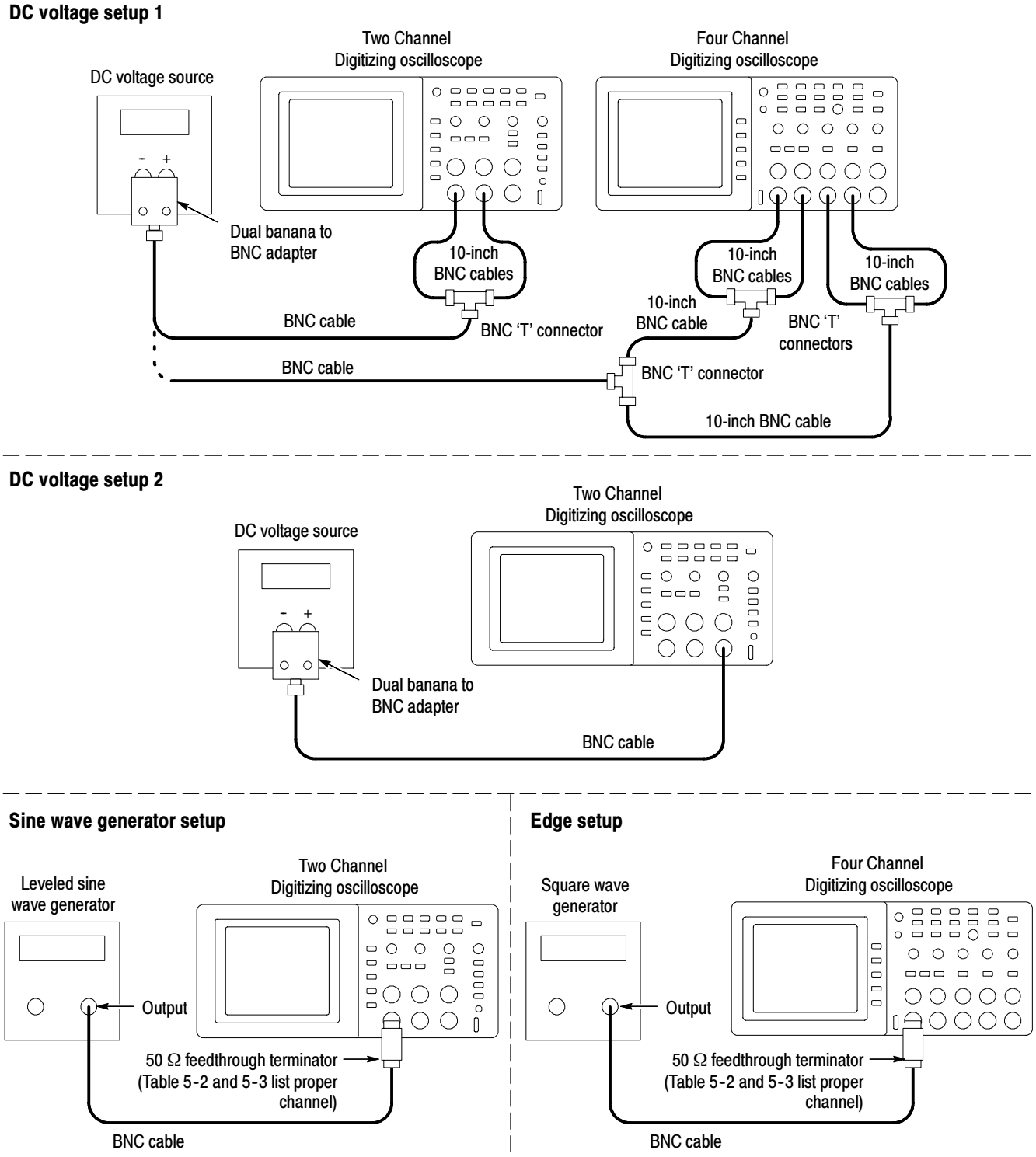

Figure 5-1: Adjustment setups

ManualsPlus.com

Adjustment Procedure

Use this procedure to load new calibration constants.

1. Enable the Service menu as described on page 5-2.
2. Push the **Service** option button.
3. Push the **Factory Cal** option button.
4. Push the **Warmup Timer** option button.
5. Push the **Start Timer** option button to ensure a 10-minute warm up. After 10 minutes passes, the oscilloscope displays a large black or green cross.
6. Press the front-panel **UTILITY** button and push the **Service** option button.
7. Push the **Factory Cal** option button.
8. Push the **FCAL INIT** option button to initiate the factory calibration routine. You are now in step 1 of the procedure.
9. As indicated by Step 1 in Table 5-2, connect a 0.0 V_{DC} source to the channel inputs.
10. Press **FCAL STEP** to load the calibration constant for step 1.
11. Follow the screen prompts along with Table 5-2 for the remainder of the routine, applying the proper signal for each step.

NOTE. *During some steps, the oscilloscope may appear to be idle for several minutes while it is processing information internally. You must wait for the screen prompt to continue.*

NOTE. *In Table 5-2, "BWL" stands for the bandwidth limit of the particular oscilloscope. If the oscilloscope is a TPS2012 or a TPS2014, the oscilloscope has a bandwidth limit of 100 MHz. If the oscilloscope is a TPS2024, the bandwidth limit is 200 MHz.*

If any step in the procedure fails, the procedure terminates. Failure will result if an incorrect signal source is connected. If this happens, you must start the procedure over from the beginning.

If the procedure completes successfully, a "Pass" message is displayed and the new adjustment takes effect.

12. Compensate the signal path by performing the self-calibration routine. Disconnect any probes or cables from the channel input connectors. Then, press the **UTILITY** button and select **Do Self Cal** to confirm that you are ready to proceed.

ManualsPlus.com

13. Disable the Service menu option by pushing the **UTILITY** front-panel button, and the **Service** and **Service Mode Off** option buttons.

Table 5-2: Adjustment steps

Step Two-channel models	Step Four-channel models	Signal	Signal source setting	Input
Refer to the DC voltage setup 1 diagram				
1	1	DC Voltage 1	0.0 V	CH1 through CHx
2	2	DC Voltage 1	-20.0 V	
3	3	DC Voltage 1	-2.0 V	
4	4	DC Voltage 1	-1.6 V	
5	5	DC Voltage 1	-1.2 V	
6	6	DC Voltage 1	-0.8 V	
7	7	DC Voltage 1	-0.4 V	
8	8	DC Voltage 1	-0.32 V	
9	9	DC Voltage 1	-0.2 V	
10	10	DC Voltage 1	-0.16 V	
11	11	DC Voltage 1	-0.08 V	
12	12	DC Voltage 1	-0.04 V	
13	13	DC Voltage 1	-0.03 V	
14	14	DC Voltage 1	-0.02 V	
15	15	DC Voltage 1	-0.015 V	
16	16	DC Voltage 1	0.015 V	
17	17	DC Voltage 1	0.02 V	
18	18	DC Voltage 1	0.03 V	
19	19	DC Voltage 1	0.04 V	
20	20	DC Voltage 1	0.08 V	
21	21	DC Voltage 1	0.16 V	
22	22	DC Voltage 1	0.2 V	
23	23	DC Voltage 1	0.32 V	
24	24	DC Voltage 1	0.4 V	
25	25	DC Voltage 1	0.8 V	
26	26	DC Voltage 1	1.2 V	
27	27	DC Voltage 1	1.6 V	
28	28	DC Voltage 1	2.0 V	
29	29	DC Voltage 1	20.0 V	
30	30	DC Voltage 1	0.0 V	

ManualsPlus.com

Table 5-2: Adjustment steps (Cont.)

Step Two-channel models	Step Four-channel models	Signal	Signal source setting	Input
Refer to the DC voltage setup 2 diagram				
31	31	DC Voltage 2	-25.0 V	EXT TRIG
32	32	DC Voltage 2	-12.5 V	
33	33	DC Voltage 2	-2.5 V	
34	34	DC Voltage 2	2.5 V	
35	35	DC Voltage 2	12.5 V	
36	36	DC Voltage 2	25 V	
Refer to the sine wave generator setup diagram. BWL refers the maximum bandwidth of the oscilloscope.				
37	37	Sine Wave Generator, 50 Ohm	5 kHz, 1 V_{p-p}	CH1
38	38	Sine Wave Generator, 50 Ohm	1 MHz, 100 mV_{p-p}	
39	39	Sine Wave Generator, 50 Ohm	1 MHz, 1 V_{p-p}	
40	40	Sine Wave Generator, 50 Ohm	50 kHz, 1.2 V_{p-p}	
41	41	Sine Wave Generator, 50 Ohm	20 MHz, 1.2 V_{p-p}	
42	42	Sine Wave Generator, 50 Ohm	BWL, 30 mV_{p-p}	
43	43	Sine Wave Generator, 50 Ohm	BWL, 60 mV_{p-p}	
44	44	Sine Wave Generator, 50 Ohm	BWL, 120 mV_{p-p}	
45	45	Sine Wave Generator, 50 Ohm	BWL, 300 mV_{p-p}	
46	46	Sine Wave Generator, 50 Ohm	BWL, 600 mV_{p-p}	
47	47	Sine Wave Generator, 50 Ohm	BWL, 1.2 V_{p-p}	
48	48	Sine Wave Generator, 50 Ohm	5 kHz, 2.5 V_{p-p}	
49	49	Sine Wave Generator, 50 Ohm	1 MHz, 2.5 V_{p-p}	
50	50	Sine Wave Generator, 50 Ohm	50 kHz, 2.5 V_{p-p}	
51	51	Sine Wave Generator, 50 Ohm	20 MHz, 2.5 V_{p-p}	
52	52	Sine Wave Generator, 50 Ohm	BWL, 2.5 V_{p-p}	
53	53	Sine Wave Generator, 50 Ohm	BWL, 5 V_{p-p}	
54	54	Sine Wave Generator, 50 Ohm	BWL, 1.6 V_{p-p}	
55	55	Edge, 50 Ohm. **Refer to Edge setup diagram.**	1 kHz, 0 to -800 mV, fast rising edge	

ManualsPlus.com

Table 5-2: Adjustment steps (Cont.)

Step Two-channel models	Step Four-channel models	Signal	Signal source setting	Input
56	56	Sine Wave Generator, 50 Ohm	5 kHz, 1 V_{p-p}	CH2
57	57	Sine Wave Generator, 50 Ohm	1 MHz, 100 mV_{p-p}	
58	58	Sine Wave Generator, 50 Ohm	1 MHz, 1 V_{p-p}	
59	59	Sine Wave Generator, 50 Ohm	50 kHz, 1.2 V_{p-p}	
60	60	Sine Wave Generator, 50 Ohm	20 MHz, 1.2 V_{p-p}	
61	61	Sine Wave Generator, 50 Ohm	BWL, 30 mV_{p-p}	
62	62	Sine Wave Generator, 50 Ohm	BWL, 60 mV_{p-p}	
63	63	Sine Wave Generator, 50 Ohm	BWL, 120 mV_{p-p}	
64	64	Sine Wave Generator, 50 Ohm	BWL, 300 mV_{p-p}	
65	65	Sine Wave Generator, 50 Ohm	BWL, 600 mV_{p-p}	
66	66	Sine Wave Generator, 50 Ohm	BWL, 1.2 V_{p-p}	
67	67	Sine Wave Generator, 50 Ohm	5 kHz, 2.5 V_{p-p}	
68	68	Sine Wave Generator, 50 Ohm	1 MHz, 2.5 V_{p-p}	
69	69	Sine Wave Generator, 50 Ohm	50 kHz, 2.5 V_{p-p}	
70	70	Sine Wave Generator, 50 Ohm	20 MHz, 2.5 V_{p-p}	
71	71	Sine Wave Generator, 50 Ohm	BWL, 2.5 V_{p-p}	
72	72	Sine Wave Generator, 50 Ohm	BWL, 5 V_{p-p}	

ManualsPlus.com

Table 5-2: Adjustment steps (Cont.)

Step Two-channel models	Step Four-channel models	Signal	Signal source setting	Input
NA	73	Sine Wave Generator, 50 Ohm	5 kHz, 1 V_{p-p}	CH3
	74	Sine Wave Generator, 50 Ohm	1 MHz, 100 mV_{p-p}	
	75	Sine Wave Generator, 50 Ohm	1 MHz, 1 V_{p-p}	
	76	Sine Wave Generator, 50 Ohm	50 kHz, 1.2 V_{p-p}	
	77	Sine Wave Generator, 50 Ohm	20 MHz, 1.2 V_{p-p}	
	78	Sine Wave Generator, 50 Ohm	BWL, 30 mV_{p-p}	
	79	Sine Wave Generator, 50 Ohm	BWL, 60 mV_{p-p}	
	80	Sine Wave Generator, 50 Ohm	BWL, 120 mV_{p-p}	
	81	Sine Wave Generator, 50 Ohm	BWL, 300 mV_{p-p}	
	82	Sine Wave Generator, 50 Ohm	BWL, 600 mV_{p-p}	
	83	Sine Wave Generator, 50 Ohm	BWL, 1.2 V_{p-p}	
	84	Sine Wave Generator, 50 Ohm	5 kHz, 2.5 V_{p-p}	
	85	Sine Wave Generator, 50 Ohm	1 MHz, 2.5 V_{p-p}	
	86	Sine Wave Generator, 50 Ohm	50 kHz, 2.5 V_{p-p}	
	87	Sine Wave Generator, 50 Ohm	20 MHz, 2.5 V_{p-p}	
	88	Sine Wave Generator, 50 Ohm	BWL, 2.5 V_{p-p}	
	89	Sine Wave Generator, 50 Ohm	BWL, 5 V_{p-p}	
	90	Sine Wave Generator, 50 Ohm	BWL, 1.6 V_{p-p}	
	91	Edge, 50 Ohm. **Refer to Edge setup diagram.**	1 kHz, 0 to -800 mV, fast rising edge	

ManualsPlus.com

Table 5-2: Adjustment steps (Cont.)

Step Two-channel models	Step Four-channel models	Signal	Signal source setting	Input
NA	92	Sine Wave Generator, 50 Ohm	5 kHz, 1 V_{p-p}	CH4
	93	Sine Wave Generator, 50 Ohm	1 MHz, 100 mV_{p-p}	
	94	Sine Wave Generator, 50 Ohm	1 MHz, 1 V_{p-p}	
	95	Sine Wave Generator, 50 Ohm	50 kHz, 1.2 V_{p-p}	
	96	Sine Wave Generator, 50 Ohm	20 MHz, 1.2 V_{p-p}	
	97	Sine Wave Generator, 50 Ohm	BWL, 30 mV_{p-p}	
	98	Sine Wave Generator, 50 Ohm	BWL, 60 mV_{p-p}	
	99	Sine Wave Generator, 50 Ohm	BWL, 120 mV_{p-p}	
	100	Sine Wave Generator, 50 Ohm	BWL, 300 mV_{p-p}	
	101	Sine Wave Generator, 50 Ohm	BWL, 600 mV_{p-p}	
	102	Sine Wave Generator, 50 Ohm	BWL, 1.2 V_{p-p}	
	103	Sine Wave Generator, 50 Ohm	5 kHz, 2.5 V_{p-p}	
	104	Sine Wave Generator, 50 Ohm	1 MHz, 2.5 V_{p-p}	
	105	Sine Wave Generator, 50 Ohm	50 kHz, 2.5 V_{p-p}	
	106	Sine Wave Generator, 50 Ohm	20 MHz, 2.5 V_{p-p}	
	107	Sine Wave Generator, 50 Ohm	BWL, 2.5 V_{p-p}	
	108	Sine Wave Generator, 50 Ohm	BWL, 5 V_{p-p}	

ManualsPlus.com

ManualsPlus.com

Maintenance

This chapter contains the information needed to perform periodic and corrective maintenance on TPS2000 Series oscilloscopes. The following sections are included:

- *Preparation* tells you how to get ready to do oscilloscope maintenance.
- *Preventing ESD* provides general information on preventing damage to internal modules when doing maintenance.
- *Inspection and Cleaning* provides procedures for inspecting the oscilloscope and cleaning its external and internal modules.
- *Removal and Installation Procedures* provides procedures for the removal and installation of modules.
- *Troubleshooting* provides information for isolating failed modules.
- *Repackaging Instructions* provides packaging information for shipment or storage.

Preparation

Only qualified personnel should perform service procedures. Read the *Service Safety Summary* and the *General Safety Summary* sections of this manual before performing any service procedures. Also refer to the chapter *Operating Information* and your oscilloscope user manual for information about using the oscilloscope.

Preventing ESD

When performing any service which requires internal access to the oscilloscope, adhere to the following precautions. These precautions will help you avoid damaging internal modules and their components due to electrostatic discharge (ESD).

CAUTION. *Static discharge can damage any semiconductor component in this oscilloscope.*

- Minimize handling of static-sensitive modules.

ManualsPlus.com

- Transport and store static-sensitive modules in their static protected containers or on a metal rail. Label any package that contains static-sensitive modules.
- Discharge the static voltage from your body by wearing a grounded antistatic wrist strap while handling these modules.
- Service static-sensitive modules only at static-free workstations. Do not allow anything capable of generating or holding a static charge on the workstation surface.
- Handle circuit boards by the edges when possible.
- Do not slide the modules over any surface.
- Avoid handling modules in areas that have a floor or work-surface covering capable of generating a static charge.

Inspection and Cleaning

This section describes how to inspect for dirt and damage, and how to clean the oscilloscope. Inspection and cleaning are done as preventive maintenance which, when done regularly, may prevent malfunctions and enhance reliability.

Preventive maintenance consists of visually inspecting and cleaning the oscilloscope, and using general care when operating it. Perform preventive maintenance more often if you operate the oscilloscope in a severe environment. A good time to perform preventive maintenance is just before adjustment of the oscilloscope.

General Care

For optimum performance, follow these recommendations:

- Protect the oscilloscope from adverse weather conditions. The oscilloscope is not waterproof.
- Do not store or leave the oscilloscope where the liquid crystal display (LCD) will be exposed to direct sunlight or high humidity for long periods of time.
- The front and rear cases help keep dust out of the oscilloscope and must be in place during normal operation.
- To avoid damage to the oscilloscope or probes, do not expose them to any sprays, liquids, or solvents.

Inspection and Cleaning Procedures

The accumulation of dirt on internal components can cause them to overheat and fail. Dirt also provides an electrical conduction path that could cause an oscilloscope failure, especially under high-humidity conditions. Inspect and clean the oscilloscope and probes as often as operating conditions require.

ManualsPlus.com

Inspection, Exterior. Inspect the outside of the oscilloscope for damage, wear, and missing parts. Oscilloscopes that appear to have been dropped or otherwise abused should be checked thoroughly to verify correct operation and performance. Immediately repair defects that could cause personal injury or lead to further damage to the oscilloscope.

Cleaning Procedure, Exterior. To clean the oscilloscope exterior and probes:

1. Remove loose dust on the outside of the oscilloscope and probes with a lint-free cloth. Use care to avoid scratching the clear glass display shield.
2. Use a soft cloth dampened with water to clean the oscilloscope, or use a 75% isopropyl alcohol solution for more efficient cleaning.

CAUTION. *To prevent getting moisture inside the oscilloscope during external cleaning, use only enough liquid to dampen the cloth or applicator.*

To avoid damage to the surface of the oscilloscope or probes, do not use any abrasive or chemical cleaning agents.

Inspection, Interior. Inspect and clean the interior if it appears that the oscilloscope may have been damaged or exposed to an unusually dirty environment.

To inspect and clean the interior, disassemble the oscilloscope by completing each of the disassembly procedures in the order given starting on page 6–5.

Inspect the internal portions of the oscilloscope for damage and wear using Table 6–1 as a guide. Repair defects immediately.

Table 6–1: Internal inspection check list

Item	Inspect for	Repair action
Front and Rear Case	Cracks or deformations. Scratched lettering or display filter. Loose connectors or labels.	Repair or replace defective hardware.
Circuit boards	Loose, broken, or corroded solder connections. Burned circuit boards. Burned, broken, or cracked circuit-run plating.	Remove failed module and replace with a new module.
Solder connections	Cold solder or rosin joints.	Resolder joint and clean with isopropyl alcohol.
Wiring and cables	Loose plugs or connectors. Burned, broken, or frayed wiring.	Firmly seat connectors. Repair or replace modules with defective wires or cables.

ManualsPlus.com

Cleaning Procedure, Interior. To clean the oscilloscope interior, perform the following steps:

1. Blow off dust with dry, low-pressure, deionized air (approximately 9 psi).
2. Remove any remaining dust with a lint-free cloth dampened in isopropyl alcohol (75% solution) and then wipe with a lint-free cloth dampened with warm deionized water. A cotton-tipped applicator is useful for cleaning in narrow spaces and on circuit boards.

STOP. *If, after performing steps 1 and 2, a module is clean upon inspection, skip steps 3 and 4. Proceed with step 5.*

If steps 1 and 2 do not remove all the dust or dirt, all modules in the oscilloscope except the Display Module and Front Panel Module may be spray washed using a solution of 75% isopropyl alcohol.

Extensive cleaning of the Display Module is difficult because water must not be trapped between the display shield and the display. The polarizers integrated into the display degrade with long-term exposure to water. The display shield and display must be replaced as an assembly if significant moisture or debris become trapped inside. Cotton tipped applicators and lint-free rags moistened in isopropyl alcohol and/or deionized water offer the best cleaning with the least opportunity for damage to the assembly.

The Front Panel Module can be damaged by deposition of film or debris inside the knob encoders. To avoid this, care must be taken to not drip liquid or blow debris into the encoders.

Proceed with step 3.

---

3. Spray wash dirty parts with the 75% isopropyl alcohol solution and wait 60 seconds for the majority of the alcohol to evaporate.
4. Use hot (49 °C to 60 °C / 120 °F to 140 °F) deionized water to thoroughly rinse the parts.
5. Dry all parts with low-pressure, deionized air.
6. Dry all components and assemblies in an oven or drying compartment using low-temperature (52 °C to 66 °C / 125 °F to 150 °F) circulating air.

Lubrication. Periodic lubrication is not required for the oscilloscope.

ManualsPlus.com

Removal and Installation Procedures

This section describes how to remove and install the major mechanical and electrical modules of the oscilloscope. It provides the following information:

- *Replacement Procedures*. Page 6-6 lists the procedures for removal and installation of major modules.
- *Tools Required*. Page 6-6 describes the tools needed to perform these procedures.

Preparation

Read this section to prepare for module removal and installation.

WARNING. *Only qualified personnel should perform service procedures. Before doing this or any other procedure in this manual, read the* General Safety Summary *and* Service Safety Summary *found at the beginning of this manual.*

Always disconnect the power cord before disassembling any portion of the oscilloscope.

To prevent damage to electrical components, read Preventing ESD *on page 6-1.*

- See Figure 10-1 on page 10-7 for an overview of how the entire oscilloscope is assembled.
- Read the *Replacement Procedures* on page 6-6 to understand what procedure to use to access a given module.
- Read *Tools Required* on page 6-6 for a list of tools needed to remove and install modules in the oscilloscope.
- If you are disassembling the oscilloscope for cleaning, refer to *Inspection and Cleaning* on page 6-2 for cleaning instructions.

List of Modules

The *Replaceable Parts* section, beginning on page 10-1, lists all of the replaceable modules.

Replacement Procedures

Disassembly for replacement is best achieved by removing and replacing the modules in a specified order.

ManualsPlus.com

To remove and replace the fan, backlight inverter board, or IO board, refer to Table 6–2.

Table 6–2: Procedures for module replacement by removing the rear case

Remove module	See procedure on
Rear case (Remove for following procedures.)	Page 6–7
Fan	Page 6–9
Backlight inverter board	Page 6–9. Remove fan first.
IO board	Page 6–10

To remove and replace the acquisition board, front panel board, LCD display, compact flash module, or keypad, refer to Table 6–3.

Table 6–3: Procedures for module replacement by removing the front case

Remove module	See procedure on
Front case (Remove for following procedures.)	Page 6–11
Acquisition board	Page 6–14. Remove IO board first.
Front panel board	Page 6–16
Display module	Page 6–17. Remove front panel board first.
Compact flash module	Page 6–18. Remove acquisition board first.
Keypad	Page 6–18

Tools Required

Use the following tools to remove and replace modules in the oscilloscope:

- Torque-limiting screwdriver, long shank, 8 in-lb (.85 N·m) range with Torx® T-15 tip
- 16 mm (5/8 inch) deep socket with wide center hole (S·K Hand Tool Corp., S-K #40818, or equivalent)
- Torque wrench to 40 in-lb (4.5 N·m)
- Screwdriver with 1/4 inch (6.35 mm) flat blade
- Pliers (all-purpose and needle-nose)

ManualsPlus.com

Rear Case

You will need a torque-limiting Torx T-15 screwdriver for this procedure.

Removal. To remove the rear case, refer to Figure 6–1 on page 6–8 and follow these steps:

1. Open the battery door and remove the batteries.
2. Place the oscilloscope face down on a soft surface, such as an anti-static mat.
3. Remove the five screws that secure the rear case to the chassis. Tilt the handle to gain better access to the top two screws.
4. Lift up and remove the rear case from the oscilloscope chassis.

Installation. Refer to Figure 6–1 and follow these procedure to reinstall the rear case.

1. Place the oscilloscope face down on a soft surface.
2. Ensure that all cables are routed within the internal chassis area.
3. Place the rear case over the assembled oscilloscope and ensure that:
   - All edges align with the chassis.
   - The RS-232, printer, and power connectors align and feed through the rear case without binding.
4. Install the five screws to secure the rear case. Tilt the handle to better access the top two holes.
5. Install the batterie(s).

CAUTION. *Avoid cross threading the screws that attach the rear case to the front case. An easy way to avoid this is to slip the screw into the hole and, using slight pressure, slowly rotate the screw counterclockwise until you feel the screw slip into the screw threads. Then tighten the screw clockwise. A properly started screw will have very little resistance going in.*

ManualsPlus.com

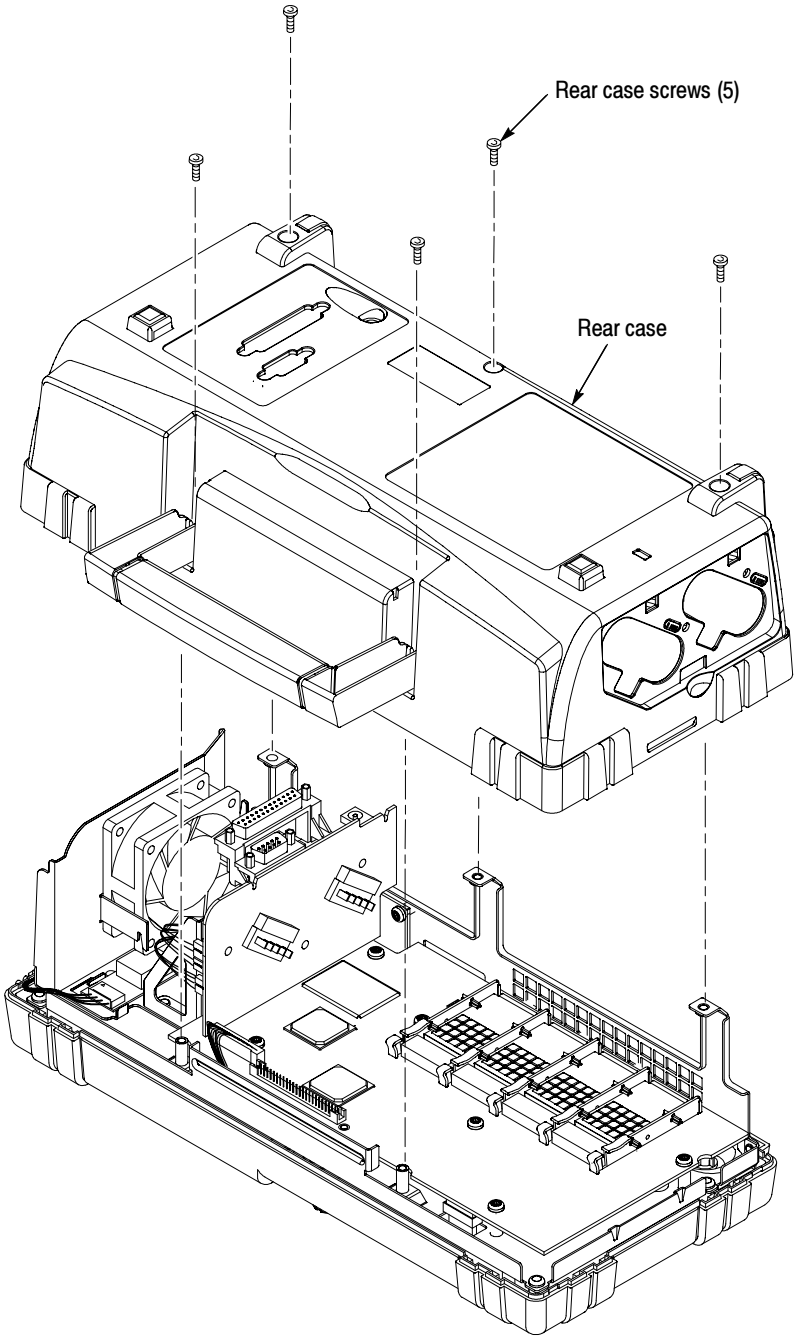

Figure 6-1: Removing and installing the rear case

ManualsPlus.com

Fan

You will need the pliers for this procedure.

Removal. To remove the fan, refer to Figure 6-2 on page 6-10 and follow these steps:

1. Remove the rear case. Follow the procedure on page 6-7.
2. Disconnect the fan cable from the IO board.
3. Use the pliers to bend the two fan-bracket tabs out of the way.
4. Remove the fan.

Installation. To install a new fan, refer to Figure 6-2 and follow these steps:

1. Align the fan bracket with the fan. Align the fan so that air blows out the side of the chassis, not into the chassis.
2. Use the pliers to bend the two fan-bracket tabs into place and secure the fan.
3. Install the fan cable on the IO board.
4. Install the rear case.

Backlight Inverter Board

You will need the pliers for this procedure.

Removal. To remove the backlight inverter board, refer to Figure 6-2 on page 6-10 and follow these steps:

1. Remove the rear case. Follow the procedure on page 6-7.
2. Disconnect the display inverter cable from the IO board.
3. Disconnect the LCD inverter cable from the backlight inverter board.
4. Use the pliers to bend the two chassis-mounting tabs out of the way.
5. Remove the board.

Installation. To install a new backlight inverter board, refer to Figure 6-2 and follow these steps:

1. Align the backlight inverter board with the chassis mounting tabs.
2. Use the pliers to bend the tabs into place and secure the board.
3. Connect the display cable to the backlight inverter board
4. Connect the display inverter cable to the IO board.
5. Install the rear case.

ManualsPlus.com

IO Board

To remove the IO board, refer to Figure 6–2 on page 6–10 and follow these steps:

1. Remove the rear case. Follow the procedure on page 6-7.
2. Disconnect all cables from the IO board.
3. Remove the three chassis mounting screws from the IO board.
4. Unseat the IO board from its connector on the acquisition board and lift up to remove the board.

Installation. To install a new IO board, refer to Figure 6–2 and follow these steps:

1. Align the connector on the bottom of the IO board with the connector on the acquisition board. Press down to seat the connector.
2. Install the three IO board mounting screws to attach the board to the support bracket.
3. Connect all cables to the IO board.
4. Install the rear case.

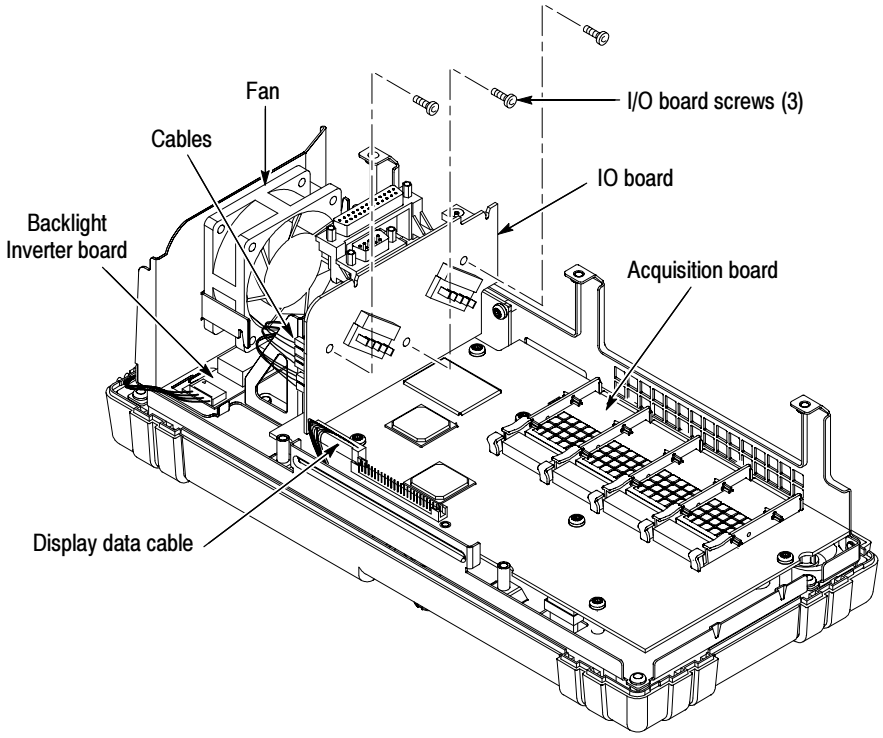

Figure 6–2: Modules accessed from the rear of the oscilloscope

ManualsPlus.com

Front-Panel Knob

Remove each front-panel knob by firmly grasping the knob and pulling it off of the front panel. If necessary, insert a screw driver between the front panel and knob and lift up.

Install the front-panel knobs by aligning the keyed knob with the shaft, and then press the knob onto the shaft.

Front Case

You will need a torque-limiting Torx T-15 screwdriver and 16 mm (5/8 inch) deep socket for this procedure.

Removal. To remove the front case, refer to Figure 6–4 on page 6–13 and follow these steps:

1. Remove the front-panel knobs. Follow the procedure on page NO TAG.
2. Place the oscilloscope with its rear case down on a soft surface, such as an anti-static mat.
3. Remove the BNC cover by prying up on the exposed edge.
4. Use the 16 mm (5/8 inch) deep socket to remove the nuts from the BNC connectors.
5. Remove the plastic BNC shells from the BNC connectors. Grasp the BNC shell with your fingers and pull up to remove the shell. See figure 6–3.

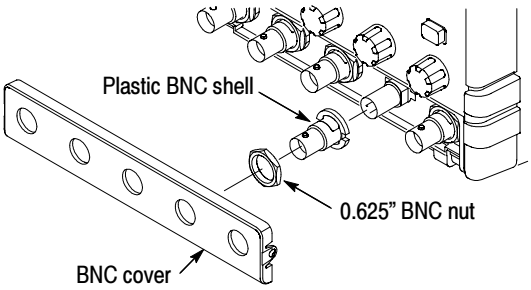

Figure 6–3: Removing the BNC cover, shell, and retaining nuts

6. Follow the procedures on page 6–7 to remove the rear case.
7. Remove the four screws from the internal chassis that attach the chassis to the front cover. See Figure 6–4.
8. Lift the chassis off of the front case.

ManualsPlus.com

Installation. To install the front case, refer to Figure 6–4 and follow these steps:

1. Place the front case face down on a soft surface.
2. Ensure that the switch keypad is aligned and feeds through the front case. Follow the procedure on page 6–19.
3. Align the power switch, BNC connectors, and knob shafts so they feed through the front case.
4. Lower the chassis onto the front case.
5. Install the four screws on the inside of the chassis that attach the chassis to the front cover. See Figure 6–4.
6. Follow the procedures on page 6–7 to install the rear case.
7. Install the plastic BNC shells onto the BNC connectors.
8. Use the 16 mm (5/16 inch) deep socket and install the BNC nuts onto the BNC connectors. Torque the nuts to 40 in-lbs using the torque wrench.
9. Install the BNC cover and front-panel knobs.

ManualsPlus.com

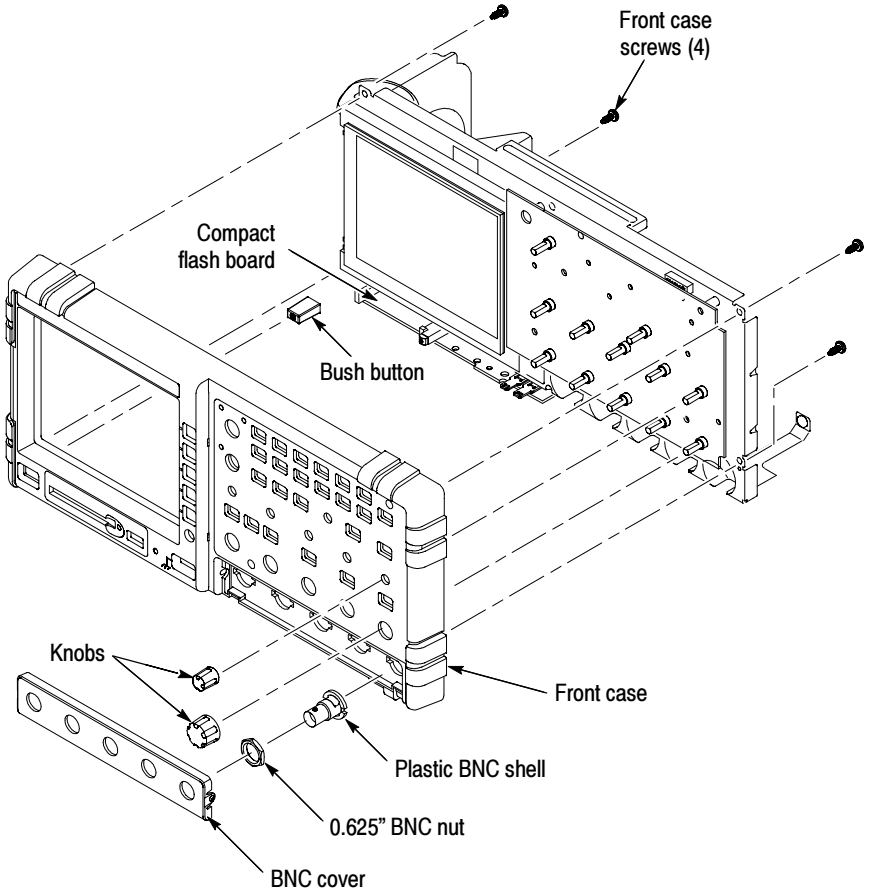

Figure 6-4: Removing the front case

ManualsPlus.com

Acquisition Board

You will need a torque-limiting Torx T-15 long-shank screwdriver, a flat-blade screwdriver, and a 16 mm (5/8 inch) deep socket for this procedure.

CAUTION. *The acquisition board is particularly sensitive to ESD. Read the* Preventing ESD *section on page 6-1 before removing or installing the acquisition board.*

Removal. To remove the acquisition board , refer to Figure 6-5 on page 6-15 and follow these steps:

1. Remove the rear case. Follow the procedure on page 6-7.
2. Remove the BNC cover by prying up on the exposed edge. See Figure 6-5 on page 6-15.
3. Use the 16 mm (5/8 inch) deep socket to remove the nuts from the BNC connectors.
4. Remove the plastic BNC shells from the BNC connectors. Grasp the BNC shell with your fingers and pull up to remove the shell. See figure 6-5.
5. Remove the IO board. Follow the procedure on page 6-10.
6. Disconnect the display data cable at J201.
7. Remove the six screws that secure the acquisition board to the chassis.
8. Use the flat-blade screwdriver to pull up on the edge of the board and unseat the connection between the acquisition board and the compact flash board. See Figure 6-5.
9. Lift up the acquisition board to unseat the connection between the acquisition board and compact flash board; then remove the acquisition board.

Installation. To install the acquisition board, refer to Figure 6-5 and follow these steps:

1. Position the acquisition board over the chassis mounting tabs and align the feedthrough connector on the front-panel and compact flash boards.
2. Push down to seat the connector.
3. Install the six screws that attach the acquisition board to the chassis.
4. Connect the display data cable at J201.
5. Install the IO board.

ManualsPlus.com

6. Install the front case screws on the inside of the chassis.
7. Install the plastic BNC shells onto the BNC connectors.
8. Use the 16 mm (5/8 inch) deep socket and install the BNC nuts onto the BNC connectors. Torque the nuts to 40 in-lbs using the torque wrench.
9. Install the BNC cover onto the front case.
10. Install the rear case.
11. Install the front-panel knobs.

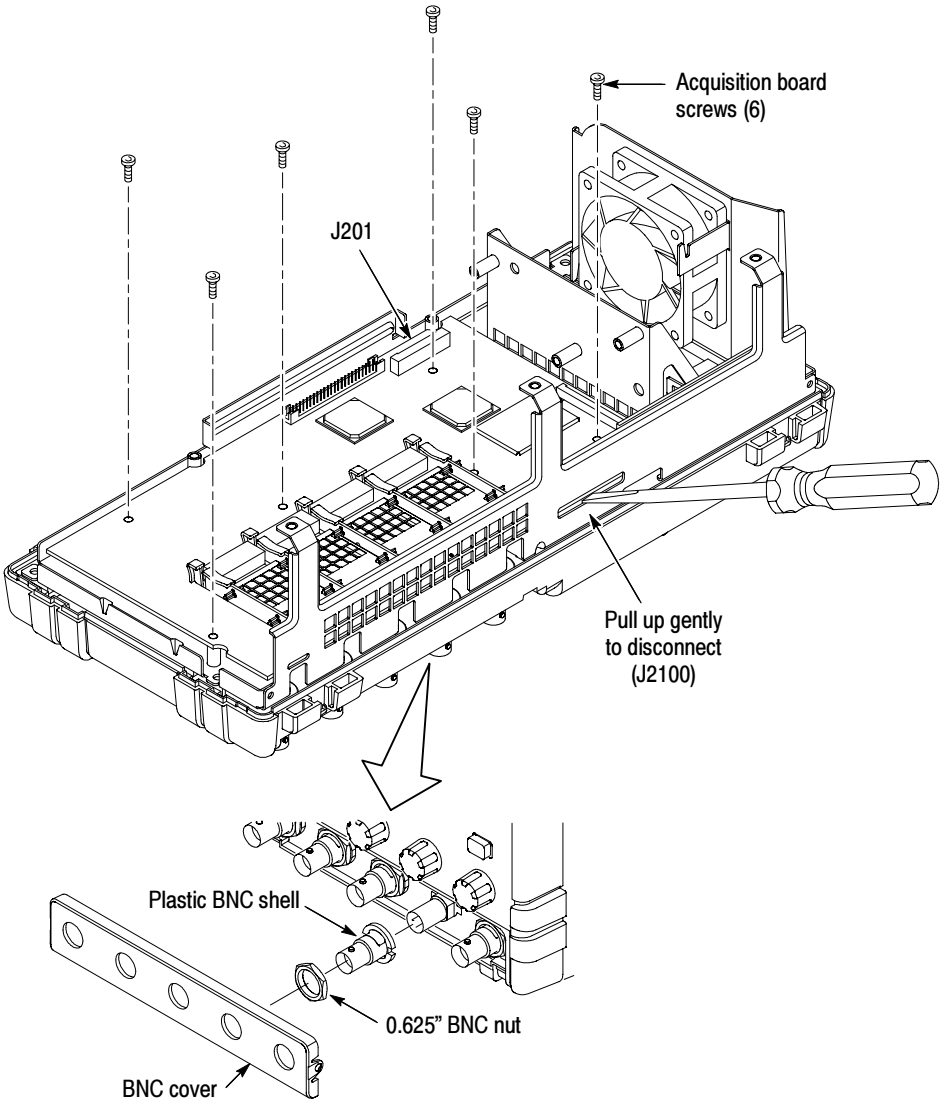

Figure 6-5: Using a screwdriver to remove the Acquisition board

ManualsPlus.com

Front-Panel Board

You will need a torque-limiting Torx T-15 screwdriver for this procedure.

Removal. To remove the front-panel board, refer to Figure 6–6 on page 6–16 and follow these steps:

1. Remove the front case. Follow the procedure on page 6–11.
2. Remove the five screws that attach the front-panel board to the chassis.
3. Pull out to remove the front-panel board from the chassis. (This will unseat the feed-through connection between the front-panel board and the acquisition board on the opposite side.

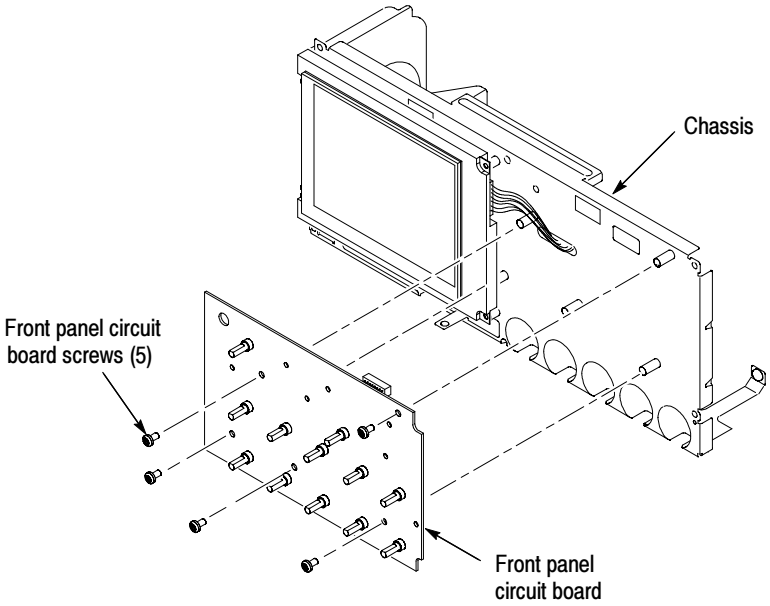

Figure 6–6: Removing the front-panel module

Installation. To install the front-panel module, refer to Figure 6–6 and follow these steps:

1. Align the front-panel board over the front chassis and reseat the feed-through connection between the front-panel board and the acquisition board on the opposite side.
2. Install the five screws to attach the front-panel board to the chassis.
3. Install the front case.

ManualsPlus.com

Display Module

You will need a torque-limiting Torx T-15 screwdriver and pliers for this procedure.

Removal. To remove the display module, refer to Figure 6–7 on page 6–17 and follow these steps:

1. Remove the front case. Follow the procedure on page 6–11.
2. Remove the front panel board. Follow the procedure on page 6–16.
3. Disconnect the display inverter cable from the backlight inverter board. See Figure 6–2 on page 6–10 for the location of the board.
4. Remove the four screws that attach the display module to the external chassis. Support the display with your hand.
5. Position the display so you can disconnect the display data cable. See Figure 6–7.

CAUTION. *The display shield is attached to the display module. Removing the shield will destroy the attaching gasket.*

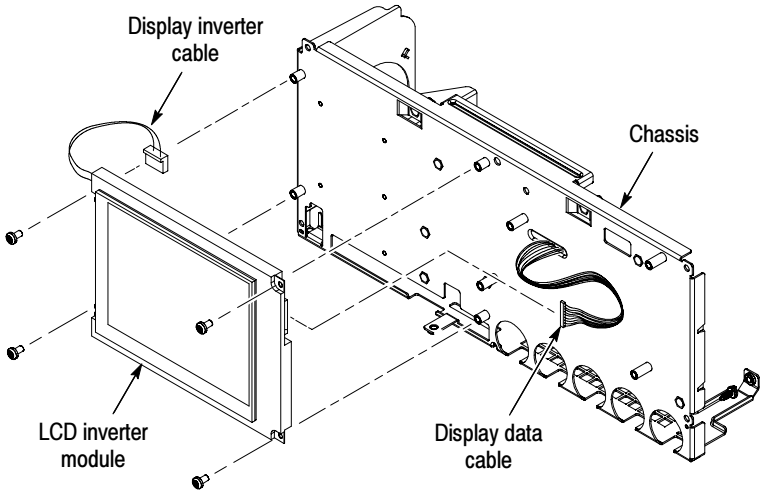

Figure 6–7: Removing the display module

Installation. To install the display module, refer to Figure 6–7 and follow these steps:

1. Connect the display data cable to the display.

ManualsPlus.com

2. Align the display module with the mounting tabs on the front of the chassis.
3. Install the four screws that attach the display module to the chassis.
4. Connect the display inverter cable to the backlight Inverter board.
5. Install the front-panel board.
6. Install the front case.

Compact Flash Board

You will need a torque-limiting Torx T-15 screwdriver for this procedure.

Removal. To remove the compact flash board, perform the follow these steps. Refer to Figure 6–4 on page 6–13 for the board location.

1. Remove the acquisition board. Follow the procedure on page 6–14.
2. Remove the two screws below the IO board mounting bracket that attach the compact flash board to the internal chassis. See Figure 6–2 on page 6–10 for the IO board location.
3. Remove the single screw below the display module that attaches the compact flash board to the external chassis.
4. Remove the compact flash board.

Installation. To install a new compact flash board, follow these steps:

1. Align the compact flash board with the mounting bracket on the front of the chassis and the mounting posts on the inside of the chassis.
2. Install the screws the attach the compact board to the chassis.
3. Reinstall the acquisition board.

Keypad

You will need a torque-limiting Torx T-15 screwdriver and 16 mm (5/8 inch) deep socket for this procedure.

Removal. To remove the switch keypad, refer to Figure 6–8 on page 6–19 and follow these steps:

1. Follow the procedure on page 6–11 to remove the front case.
2. Lift the keypad out of the front case.

CAUTION. *Keep the electrical contacts on the back of the keypad clean. Skin oils and dust will inhibit good electrical contact.*

ManualsPlus.com

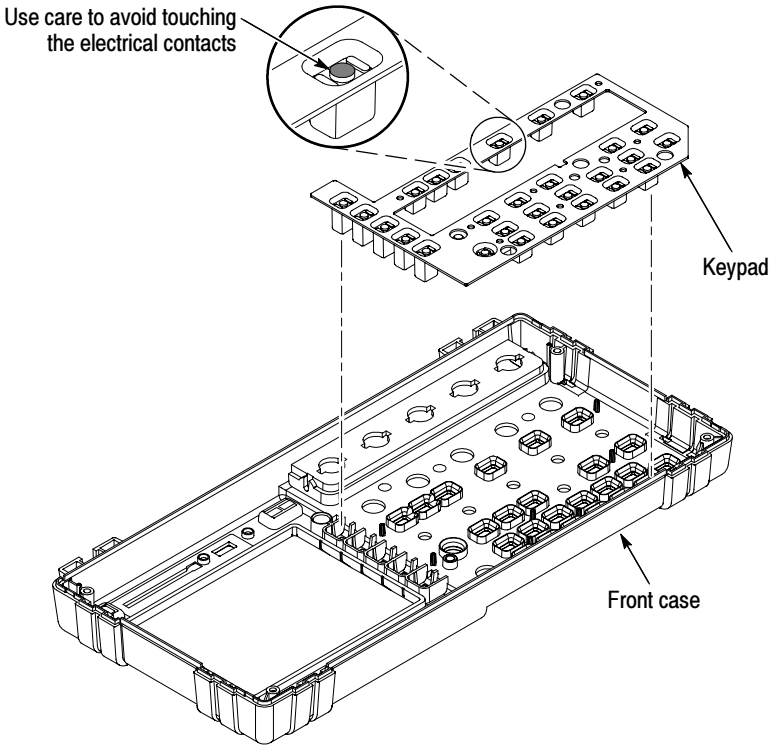

Figure 6-8: Removing and installing the keypad

Installation. To install the switch keypad, refer to Figure 6-8 and follow these steps:

1. Place the front case face down on a soft surface.
2. Align the switch keypad into the front case using the guide posts and the holes in the keypad.

CAUTION. *Keep the electrical contacts on the back of the switch pad clean. Skin oils and dust will inhibit good electrical contact.*

3. Ensure that all buttons are properly seated into place before proceeding.
4. Place the entire internal assembly into the front case.

ManualsPlus.com

Troubleshooting

This section contains information and procedures to help you isolate a defective module in the oscilloscope.

WARNING. *Before perform this or any other procedure in this manual, read the* General Safety Summary *and* Service Safety Summary *found at the beginning of this manual. Also, to prevent possible injury or damage to electrical components, read* Preventing ESD *on page 6–1.*

Adjustment After Repair

If you replace the acquisition circuit board, you must adjust the oscilloscope after repair. Refer to the chapter *Adjustment Procedures* on page 5–1.

Required Tools and Equipment

You may need the the following tools and equipment to troubleshoot the oscilloscope:

Tools and equipment	Example
Oscilloscope with 1X/10X and 100X probes	Tektronix TDS1000- or TDS2000-series oscilloscope with standard accessory 1X/10X probe (P2200) and optional 100X probe (P5100 or P5200)
DMM	3.5 or greater digit DMM

Troubleshooting Tree

To isolate a problem to a specific troubleshooting procedure, use the trouble-shooting tree in Figures 6–9 through 6–12.

ManualsPlus.com

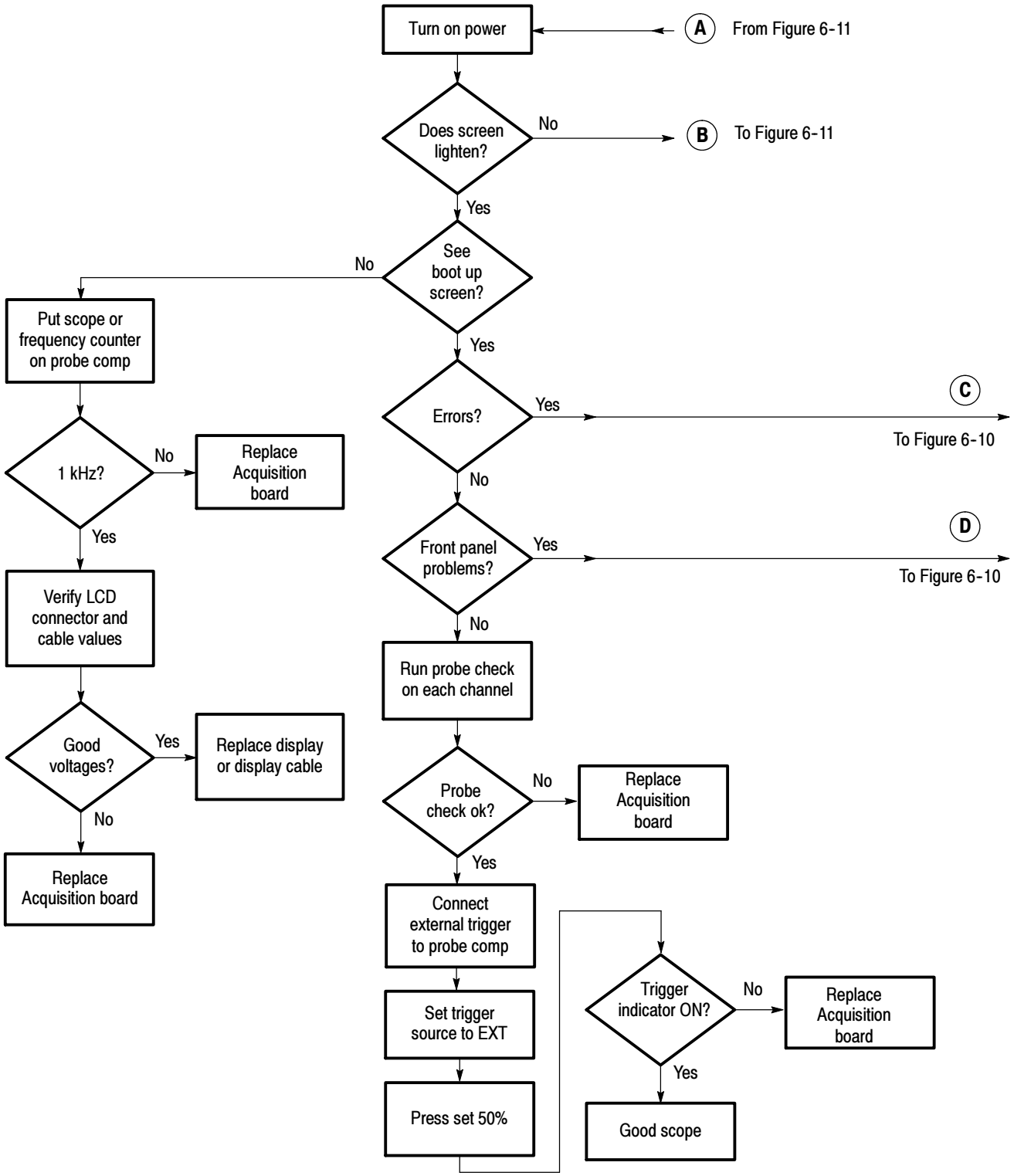

Figure 6-9: Oscilloscope troubleshooting tree (1 of 4)

ManualsPlus.com

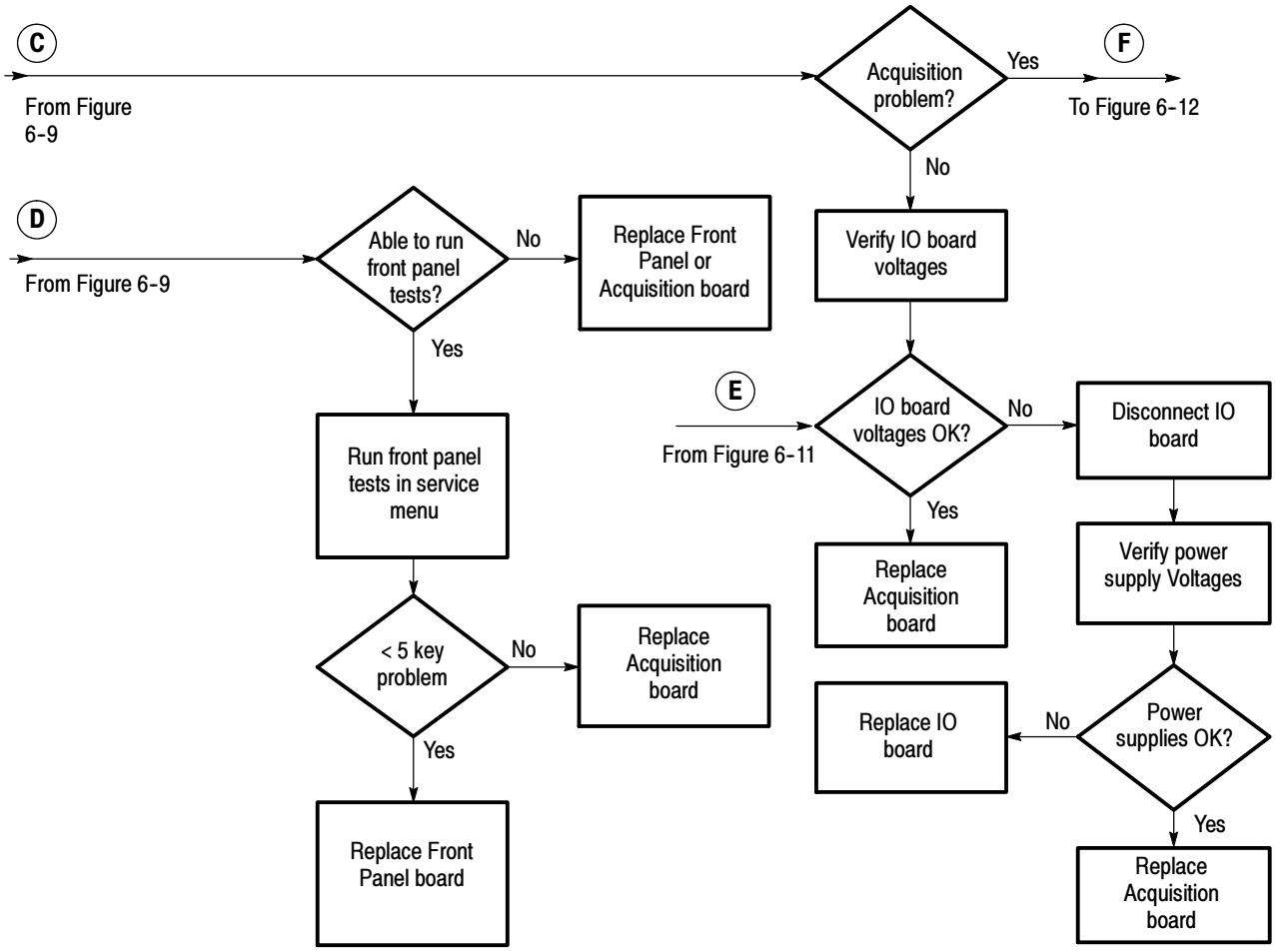

Figure 6-10: Oscilloscope troubleshooting tree (2 of 4)

ManualsPlus.com

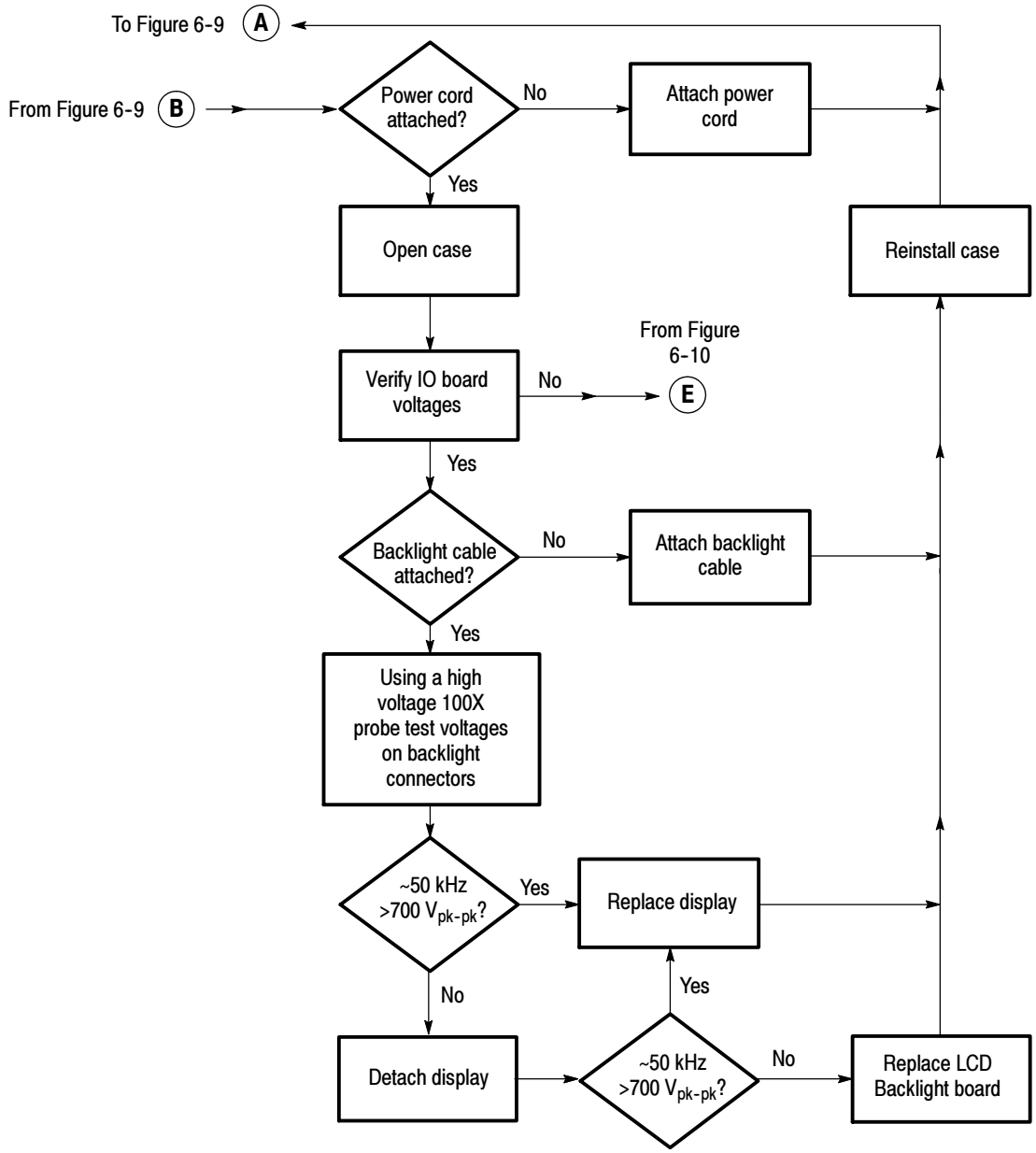

Figure 6-11: Oscilloscope troubleshooting tree (3 of 4)

ManualsPlus.com

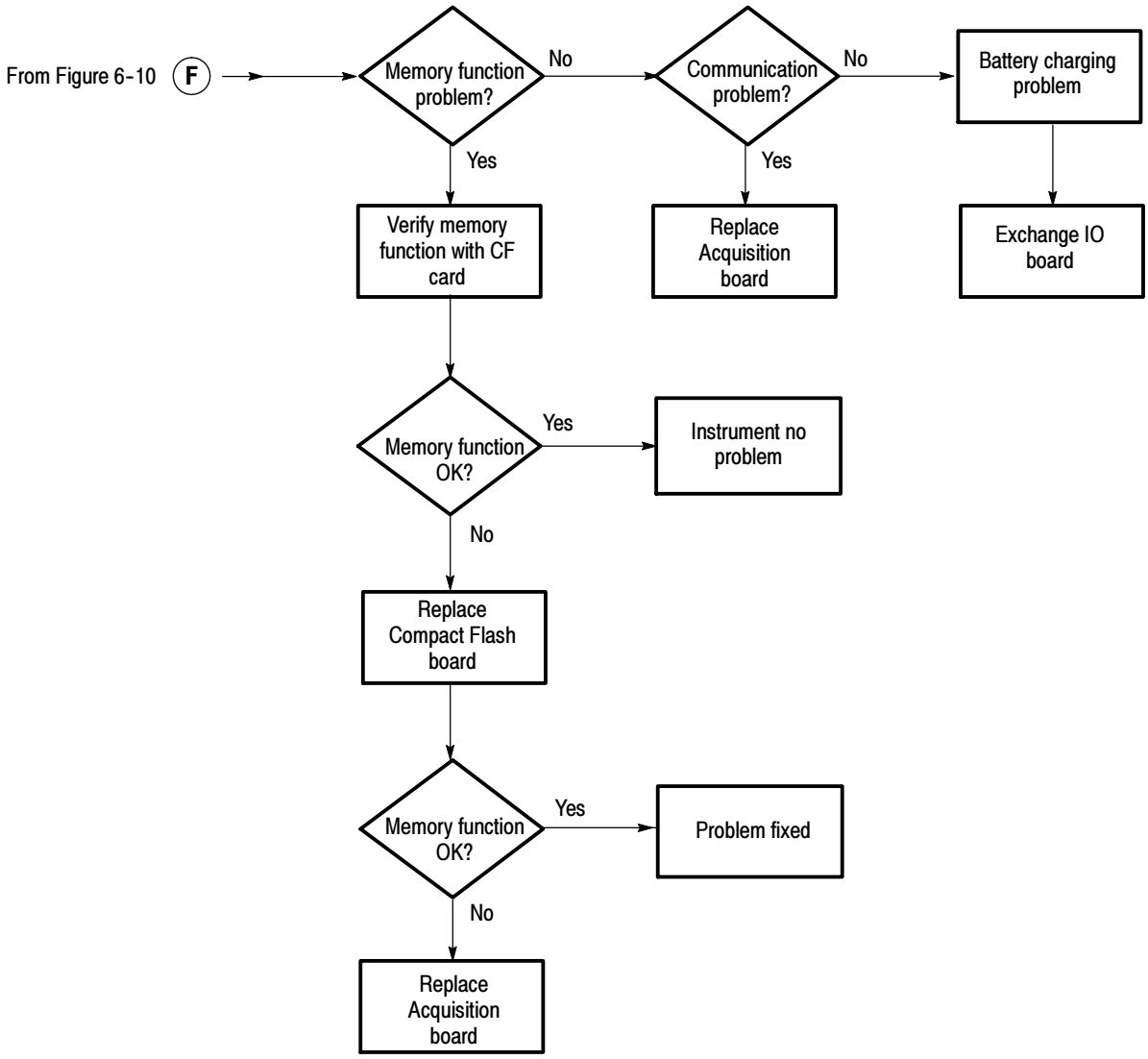

Figure 6-12: Oscilloscope troubleshooting tree (4 of 4)

ManualsPlus.com

PROBE COMP Output

When the oscilloscope is on and operating properly, the PROBE COMP output should generate a square wave, approximately 5 V in amplitude, at a 1 kHz frequency. Use the oscilloscope and set the Attenuation switch to 10X on the P2100 probe to probe this output.

As shown in the table below, there are two cases of defects. Either the 1 kHz signal is on and the IO and Acquisition boards are both active and functionally capable of performing an acquisition, or one of those two modules is not performing correctly. While a large number of different possible frequencies exist, all involve detected failures on the Acquisition or IO boards due to failure.

Signal at PROBE COMP	Possible problem
1 kHz signal, no display	Troubleshoot the display
Non-1 kHz signal	Troubleshoot the Acquisition board
No signal	Troubleshoot the power supply

Using the Error Log

Failures that occur during the power-up diagnostics or normal oscilloscope operation place an entry in the error log.

Accessing the error log. The error log list can be accessed anytime by pushing the **UTILITY** button and then selecting **Options > Error Log**. Table 6–4 lists the error codes and probable causes.

Table 6–4: List of error codes

Number	ID	Description	Probable cause
0	Battery	Battery 1 alarm	Battery hardware failure; replace battery. If errors persists, contact Tektronix
1	Battery	Battery 2 alarm	
2	Battery	PIC Communication	May occur sporadically during normal operation. If errors occur repeatedly, a hardware failure may exist. Contact Tektronix.
3	Battery	PIC HW Failure	
0	Diagnostics	Diagnostics internal error	Contact Tektronix
4	Diagnostics	CH1 diagnostics failed	Acquisition board or power supply failure
5	Diagnostics	CH2 diagnostics failed	Acquisition board or power supply failure
7	Diagnostics	ADG421 diagnostics failed	Acquisition board or power supply failure

ManualsPlus.com

Table 6-4: List of error codes (cont.)

Number	ID	Description	Probable cause
12	Diagnostics	CH3 diagnostics failed	Acquisition board or power supply failure
13	Diagnostics	CH4 diagnostics failed	Acquisition board or power supply failure
14	Diagnostics	ADG421 #2 diagnostics failed	Acquisition board or power supply failure
255	Software	Software defect	Contact Tektronix

Clearing the Error Log. To clear the error log after fixing a problem, follow these steps:

1. Enable the Service menus as described on page 5-2.
2. Push the **UTILITY** button and push the **Service** option button to display the Service menu.
3. Push the **Service Diag.** option button to display the Diagnostics menu.
4. Push the **Clear Error Log** option button to clear the error log of past failures. This also sets the Power Cycle count to zero.

ManualsPlus.com

Repackaging Instructions

Use these procedures to repackage the oscilloscope for shipment or storage.

Packaging

Use a corrugated cardboard shipping carton having a test strength of at least 125 kg (275 pounds), and with an inside dimension at least 15.25 cm (six inches) greater than the oscilloscope dimensions. Make sure that the oscilloscope is adequately padded with a cushioning material like foam, paper, or bubble wrap. The oscilloscope should not move around inside of the carton when sealed.

If the oscilloscope is being shipped to a Tektronix Service Center, enclose the following information:

- The owner address
- Name and phone number of a contact person
- Type and serial number of the oscilloscope
- Reason for returning
- A complete description of the service required

Seal the shipping carton with an industrial stapler or strapping tape.

Mark the address of the Tektronix Service Center and also your own return address on the shipping carton in two prominent locations.

Storage

The oscilloscope should be stored in a clean, dry environment. The following environmental characteristics apply for both shipping and storage (oscilloscope not operating):

- Temperature range: –20 °C to +60 °C
- Altitude: To 15,000 m

See the chapter *Specifications* for a complete listing of the environmental characteristics.

ManualsPlus.com

ManualsPlus.com

Options

There are no options available for the TPS2000-series oscilloscopes. For a list of available accessories, refer to chapter *Mechanical Parts List*.

ManualsPlus.com

ManualsPlus.com

Electrical Parts List

Refer to the *Mechanical Parts List* chapter for a complete listing and description of replaceable parts for the TPS2000-series oscilloscopes.

ManualsPlus.com

ManualsPlus.com

Diagrams

This section describes the electrical operation of the TPS2000 Series oscilloscope using the major circuit blocks. Figure 9-1 shows the oscilloscope interconnections used in the four-channel version.

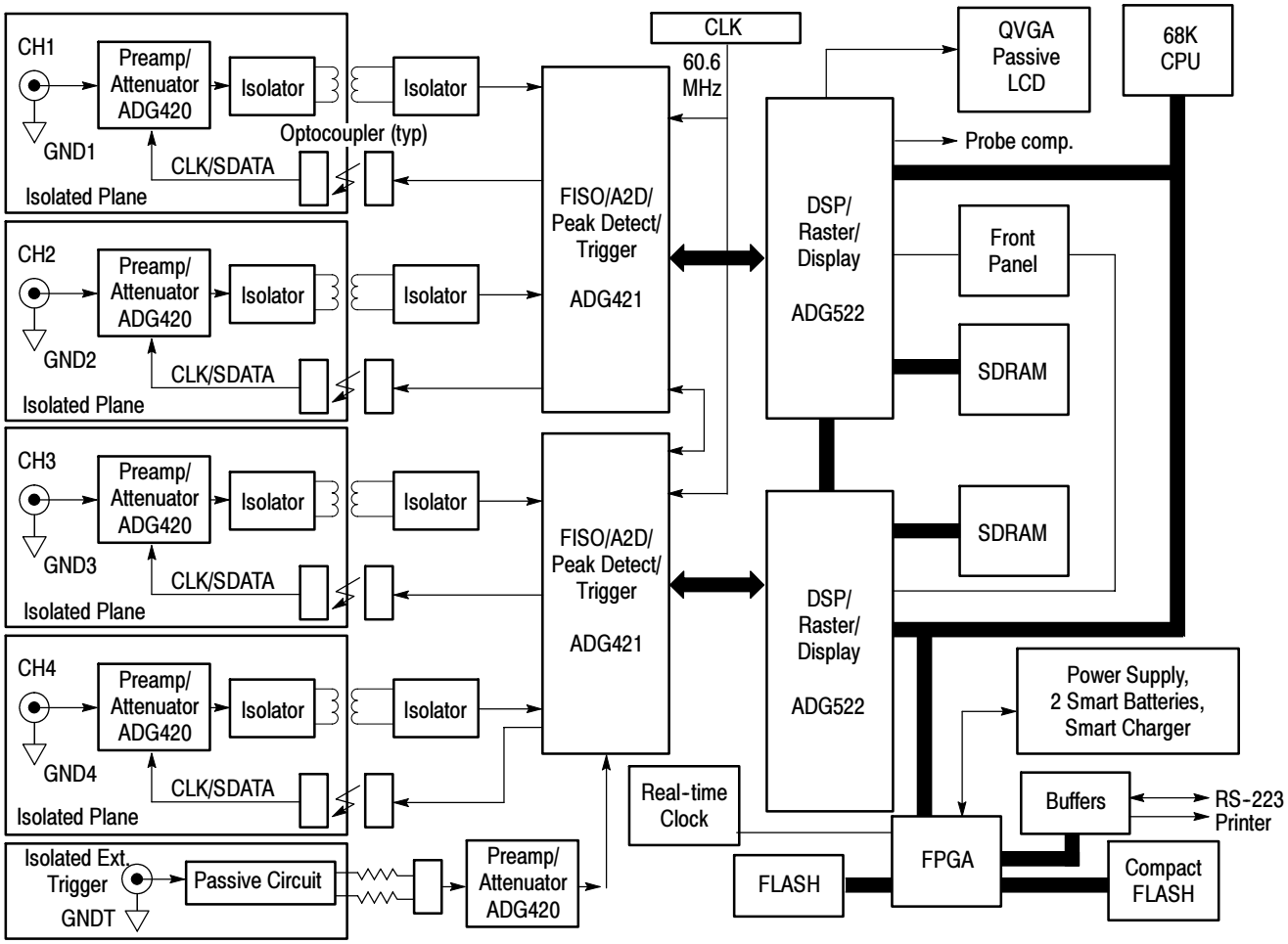

Figure 9-1: TPS2000 Series block diagram

ManualsPlus.com

ManualsPlus.com

Replaceable Parts

This section contains a list of the replaceable modules for the TPS2000 Series oscilloscopes. Use this list to identify and order replacement parts.

Parts Ordering Information

Replacement parts are available through your local Tektronix field office or representative.

Changes to Tektronix products are sometimes made to accommodate improved components as they become available and to give you the benefit of the latest improvements. Therefore, when ordering parts, it is important to include the following information in your order.

- Part number
- Instrument type or model number
- Instrument serial number
- Instrument modification number, if applicable

If you order a part that has been replaced with a different or improved part, your local Tektronix field office or representative will contact you concerning any change in part number.

Module Servicing

Modules can be serviced by selecting one of the following two options. Contact your local Tektronix service center or representative for repair assistance.

Module Exchange. In some cases you may exchange your module for a remanufactured module. These modules cost significantly less than new modules and meet the same factory specifications. For more information about the module exchange program, call 1-800-833-9200 and select option 2.

New Modules. You may purchase replacement modules in the same way as other replacement parts.

ManualsPlus.com

Using the Replaceable Parts List

This section contains a list of the mechanical and electrical components that are replaceable for the oscilloscope. Use this list to identify and order replacement parts.

Table 10–1 describes each column in the parts list.

Table 10–1: Parts list column descriptions

Column	Column name	Description
1	Figure & Index Number	Items in this section are referenced by figure and index numbers to the exploded view illustrations that follow.
2	Tektronix Part Number	Use this part number when ordering replacement parts from Tektronix.
3 and 4	Serial Number	Column three indicates the serial number at which the part was first effective. Column four indicates the serial number at which the part was discontinued. No entries indicates the part is good for all serial numbers.
5	Qty	This indicates the quantity of parts used.
6	Name & Description	An item name is separated from the description by a colon (:). Because of space limitations, an item name may sometimes appear as incomplete. Use the U.S. Federal Catalog handbook H6-1 for further item name identification.
7	Mfr. Code	This indicates the code of the actual manufacturer of the part.
8	Mfr. Part Number	This indicates the actual manufacturer's or vendor's part number.

Abbreviations Abbreviations conform to American National Standard ANSI Y1.1–1972.

ManualsPlus.com

Mfr. Code to Manufacturer Cross Index

The table titled Manufacturers cross index shows codes, names, and addresses of manufacturers or vendors of components listed in the parts list.

Table 10-2: Manufacturers cross index

Mfr. code	Manufacturer	Address	City, state, zip code
80009	TEKTRONIX INC	14200 SW KARL BRAUN DR PO BOX 500	BEAVERTON, OR 97077-0001

ManualsPlus.com

Table 10-3: Replaceable parts list

Fig. & index number	Tektronix part number	Serial no. effective	Serial no. discont'd	Qty	Name & description	Mfr. code	Mfr. part number
10-1	441-2348-00			1	CHASSIS 2 CH	80009	441-2348-00
	441-2349-00			1	CHASSIS 4 CH	80009	441-2349-00
-2	119-6892-XX			1	BACKLIGHT INVERTER CRT BD, 5V IN, 1400V OPEN CKT OUT	80009	119-6892-XX
-3	119-5877-00			1	FAN ASSY,DC; TUBEAXIAL;12V,0.72W,90MA,3,150 RPM,23DBA,12.4 CFM;DFD0612L W/CABLE ASSEMBLY ATTACHED;764/WFM601A/WFM601E/WFM601M,SAFETY CONTROLLED	80009	119-5877-00
-4	174-4949-00			1	CABLE ASSY;DISPLAY INVERTER,28 AWG,6.0 L,1X5,0.049CTR	80009	174-4949-00
-5	174-4904-00			1	ON/OFF SWITCH, CABLE ASSEMBLY	80009	174-4904-00
-6	679-5742-XX			1	CKT BD ASSY; IO BOARD	80009	679-5742-XX
-7	211-1198-00			27	SCREW,MACHINE; 6-32 X 0.250,PNH,STL,ZNPL,T-15	ORDER BY DESCRIPTION	
-8	174-4673-00			1	CA ASSY,SP; DATA,COLOR, 7.0 L	80009	174-4673-00
-9	650-4665-00			1	ASSEMBLY, REAR CASE	80009	650-4665-00
-10	367-0538-00			1	HANDLE, OVERMOLDED	80009	367-0538-00
-11	348-1791-00			2	FOOT; REAR,BLACK, 0.4 X 0.4 X 0.1(HEIGHT)	80009	348-1791-00
-12	348-1704-00			2	FOOT; REAR,SANTOPRENE,BLACK	80009	348-1704-00
-13	200-4844-00			1	COVER, BATTERY DOOR	80009	200-4844-00
-14	348-1703-00			2	FOOT; FRONT,FLIPMPC/ABS,SILVER GRAY	80009	348-1703-00
-15	146-0150-00			2	BATTERY, LITHIUM-ION, RECHARGEABLE, 11V, 6.6AH, SMBUS, RECESSED TERMINALS, SAFETY CONTROLLED	80009	146-0150-00
-16	200-4847-00			5	COVER, ISOLATION BARRIER	80009	200-4847-00
-17	211-1143-00			9	SCREW,PT; K35-1.57,PAN HEAD,T-15	ORDER BY DESCRIPTION	
-18	337-4305-00			4	SHIELD,CHANNEL ATTENUATION	80009	337-4305-00
-19	671-5735-XX			1	CKT BD ASSY; ACQUISITION BD, 2CH, TPS2012	80009	671-5735-XX
	671-5919-XX			1	CKT BD ASSY; ACQUISITION BD, 4CH, TPS2014	80009	671-5919-XX
	671-5741-XX			1	CKT BD ASSY; ACQUISITION BD, 4CH, TPS2024	80009	671-5741-XX
-20	657-0137-00			1	MODULAR ASSEMBLY;COMPACT FLASH ASSEMBLY	80009	657-0137-00
-21	213-1139-00			2	SCREW,TPG,TF; 2-28 X 0.188,PLASTITE,PHILLIPS,PNH, STL ZN PL	ORDER BY DESCRIPTION	
-22	679-5744-XX			1	CKT BD ASSY; FRONT PANEL BD, 2CH	80009	679-5744-XX
	679-5745-XX			1	CKT BD ASSY; FRONT PANEL BD, 4CH	80009	679-5745-XX
-23	650-4349-01			1	FRAME ASSEMBLY; DISPLAY,COLOR	80009	650-4349-01
-24	260-2785-00			1	SWITCH,KEYPAD; ELASTOMERIC,FRONT PANEL, PUSHBUTTON,2CH COLOR	80009	260-2785-00
	260-2786-00			1	SWITCH,KEYPAD; ELASTOMERIC,FRONT PANEL, PUSHBUTTON,4CH COLOR	80009	260-2786-00
-25	202-0416-00			1	CASE,FRONT; 2CH,OVERMOLDED METALIZED	80009	202-0416-00
	202-0417-00				CASE,FRONT; 4CH,OVERMOLDED METALIZED	80009	202-0417-00

ManualsPlus.com

Table 10-3: Replaceable parts list (cont.)

Fig. & index number	Tektronix part number	Serial no. effective	Serial no. discont'd	Qty	Name & description	Mfr. code	Mfr. part number
-26	348-1525-00			2	FOOT; FRONT,SANTOPRENE,BLACK,64 DEROMETER, TEXTURED	80009	348-1525-00
-27	050-3598-00			1	REPLACEMENT KIT BNC SHELL	80009	050-3598-00
-28	366-0771-00			6	KNOB,CAP; PC/ABS BAYBLEND FR110,SILVER GRAY,0.650 DIA X 0.520 H	80009	366-0771-00
-29	366-0772-00			6	KNOB,CAP; PC/ABS BAYBLEND FR110,SIVER GRAY,0.425 DIA X 0.520 H	80009	366-0772-00
-30	200-4860-00			1	COVER; BNC DOOR, 2 CHANNEL	80009	200-4860-00
	200-4846-00			1	COVER; BNC DOOR, 4 CHANNEL	80009	200-4846-00
-31	335-1137-00			1	2 CH FRONT PANEL, COLOR	80009	335-1137-00
	335-1138-00			1	4 CH FRONT PANEL, COLOR	80009	335-1138-00
-32	TPS2PWR1			1	POWER APPLICATION SOFTWARE MODULE	80009	TPS2PWR1
-33	156-9413-00			1	IC,MEMORY; CMOS,FLASH;32MB OR MORE,MEMORY MODULE,COMPACT FLASH,(CF),TYPE 1;SDCFB16-101-00, 50 PIN MODULE 1EAA0 CT8MBC1.MD	ORDER BY DESCRIPTION	
-34	366-0845-00			1	PUSH BUTTON; POWER,PC/ABS BAYBLEND,FR110,SILVER	80009	366-0845-00
-35	335-1131-00			1	BEZEL, TPS2012 (100MHZ)	80009	335-1131-00
	335-1132-00			1	BEZEL, TPS2014 (100MHZ)	80009	335-1132-00
	335-1133-00			1	BEZEL, TPS2024 (200MHZ)	80009	335-1133-00
-36	335-1108-00			1	LABEL, 2 CH LANGUAGE, FRENCH	80009	335-1108-00
	335-1109-00			1	LABEL, 2 CH LANGUAGE, ITALIAN	80009	335-1109-00
	335-1110-00			1	LABEL, 2 CH LANGUAGE, GERMAN	80009	335-1110-00
	335-1111-00			1	LABEL, 2 CH LANGUAGE, SPANISH	80009	335-1111-00
	335-1112-00			1	LABEL, 2 CH LANGUAGE, JAPANESE	80009	335-1112-00
	335-1113-00			1	LABEL, 2 CH LANGUAGE, PORTUGUESE	80009	335-1113-00
	335-1114-00			1	LABEL, 2 CH LANGUAGE, CHINESE (SIMPLIFIED)	80009	335-1114-00
	335-1115-00			1	LABEL, 2 CH LANGUAGE, CHINESE (TRADITIONAL)	80009	335-1115-00
	335-1116-00			1	LABEL, 2 CH LANGUAGE, KOREAN	80009	335-1116-00
	335-1117-00			1	LABEL, 2 CH LANGUAGE, RUSSIAN	80009	335-1117-00
	335-1118-00			1	LABEL, 4 CH LANGUAGE, FRENCH	80009	335-1118-00
	335-1119-00			1	LABEL, 4 CH LANGUAGE, ITALIAN	80009	335-1119-00
	335-1120-00			1	LABEL, 4 CH LANGUAGE, GERMAN	80009	335-1120-00
	335-1121-00			1	LABEL, 4 CH LANGUAGE, SPANISH	80009	335-1121-00
	335-1122-00			1	LABEL, 4 CH LANGUAGE, JAPANESE	80009	335-1122-00
	335-1123-00			1	LABEL, 4 CH LANGUAGE, PORTUGUESE	80009	335-1123-00
	335-1124-00			1	LABEL, 4 CH LANGUAGE, CHINESE (SIMPLIFIED)	80009	335-1124-00
	335-1125-00			1	LABEL, 4 CH LANGUAGE, CHINESE (TRADITIONAL)	80009	335-1125-00
	335-1126-00			1	LABEL, 4 CH LANGUAGE, KOREAN	80009	335-1126-00

ManualsPlus.com

Table 10-3: Replaceable parts list (cont.)

Fig. & index number	Tektronix part number	Serial no. effective	Serial no. discont'd	Qty	Name & description	Mfr. code	Mfr. part number
	335-1127-00			1	LABEL, 4 CH LANGUAGE, RUSSIAN	80009	335-1127-00
-37	200-4845-00			1	COVER, FRONT PROTECTIVE	80009	200-4845-00

ManualsPlus.com

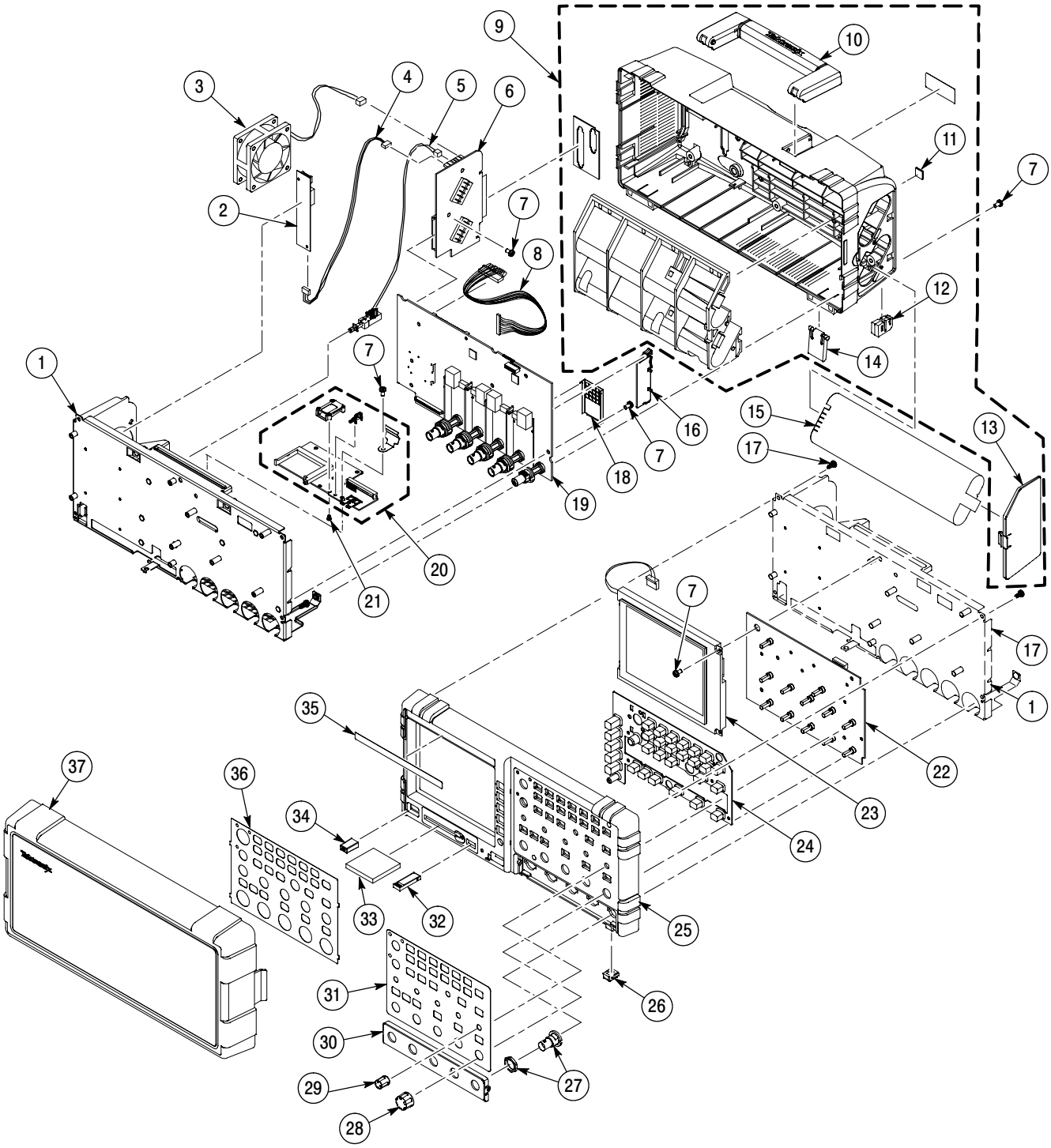

Figure 10-1: Exploded view diagram

ManualsPlus.com

Replaceable Accessories

Tables 10–4 and 10–5 list the TPS2000 Series oscilloscope replaceable accessories. Some accessories are not shown in Figure 10–1. Some replaceable accessories are shown in Figure 10–2.

Table 10–4: Replaceable standard accessories

Description of accessory		Tektronix part number or nomenclature
Passive 1X/10X probes		P2220
Instrument user manuals:		
English		071-1441-XX
French		071-1442-XX
Italian		071-1443-XX
German		071-1444-XX
Spanish		071-1445-XX
Japanese		071-1446-XX
Portuguese		071-1447-XX
Simplified Chinese		071-1448-XX
Traditional Chinese		071-1449-XX
Korean		071-1450-XX
Russian		071-1451-XX
Replacement power cords:		
Standard, North American	120 V, 60 Hz	161-0066-00
Option A1, European	230 V, 50 Hz	161-0066-09
Option A2, United Kingdom	230 V, 50 Hz	161-0066-10
Option A3, Australian	240 V, 50 Hz	161-0066-11
Option A5, Switzerland	230 V, 50 Hz	161-0154-00
Option A6, Japan	100 V, 60 Hz	161-0298-00
Option AC, China	220 V, 50/60 Hz	161-0304-00
Option A99,	No power cord	–
Battery, Lithium-ion rechargeable		146-0150-XX (TPSBAT)
Power adapter, desktop, AC-to-DC		119-6998-XX (TPSCHG)

ManualsPlus.com

Table 10-5: Replaceable optional accessories

Description of accessory	Tektronix part number or nomenclature
Hanger, instrument	343-1689-XX
Carrying case, soft	016-1950-XX
Transit case, hard (The soft carrying case fits inside the hard transit case. For proper use of the hard transit case, always include the soft carrying case inside the hard transit case.)	016-1955-XX (HCTEK321)
Programmer manual	071-1075-XX
Power Application user manuals:	
English	071-1452-XX
French	071-1453-XX
Italian	071-1454-XX
German	071-1455-XX
Spanish	071-1456-XX
Japanese	071-1457-XX
Portuguese	071-1458-XX
Simplified Chinese	071-1459-XX
Traditional Chinese	071-1460-XX
Korean	071-1461-XX
Russian	071-1462-XX
Service manual	071-1465-XX
Software, OpenChoice	020-2514-XX

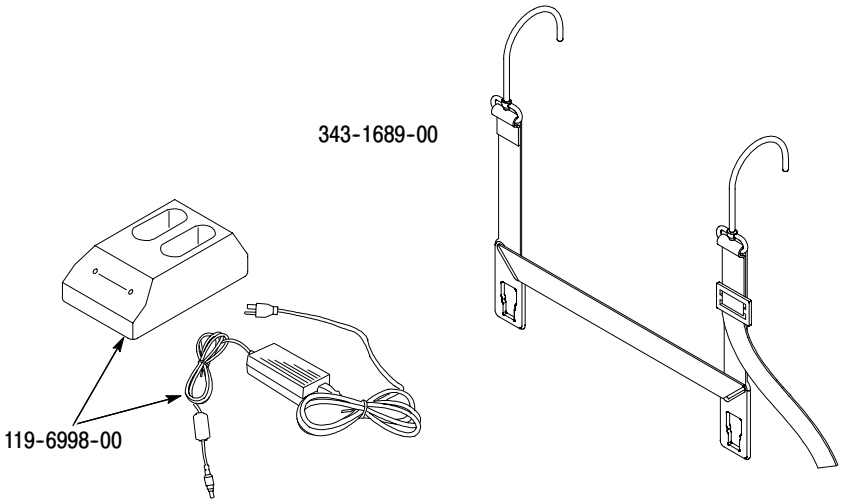

Figure 10-2: Replaceable accessories

ManualsPlus.com