ManualsPlus.com

Agilent Technologies

R/Q/U/V281A, B mm-Wave-to-Coax Adapters 26.5 to 65 GHz

Operating Note

Agilent Part Number: 00281-90055
Printed in USA
Print Date: October 2004
Supersedes: January 2004
© Agilent Technologies, Inc. 2000, 2004.

00281-90055

ManualsPlus.com

Notice

DOCUMENTATION WARRANTY

THE MATERIAL CONTAINED IN THIS DOCUMENT IS PROVIDED "AS IS," AND IS SUBJECT TO BEING CHANGED, WITHOUT NOTICE, IN FUTURE EDITIONS. FURTHER, TO THE MAXIMUM EXTENT PERMITTED BY APPLICABLE LAW, AGILENT DISCLAIMS ALL WARRANTIES, EITHER EXPRESS OR IMPLIED WITH REGARD TO THIS MANUAL AND ANY INFORMATION CONTAINED HEREIN, INCLUDING BUT NOT LIMITED TO THE IMPLIED WARRANTIES OF MERCHANTABILITY AND FITNESS FOR A PARTICULAR PURPOSE. AGILENT SHALL NOT BE LIABLE FOR ERRORS OR FOR INCIDENTAL OR CONSEQUENTIAL DAMAGES IN CONNECTION WITH THE FURNISHING, USE, OR PERFORMANCE OF THIS DOCUMENT OR ANY INFORMATION CONTAINED HEREIN. SHOULD AGILENT AND THE USER HAVE A SEPARATE WRITTEN AGREEMENT WITH WARRANTY TERMS COVERING THE MATERIAL IN THIS DOCUMENT THAT CONFLICT WITH THESE TERMS, THE WARRANTY TERMS IN THE SEPARATE AGREEMENT WILL CONTROL.

RESTRICTED RIGHTS NOTICE

If software is for use in the performance of a U.S. Government prime contract or subcontract, Software is delivered and licensed as “Commercial computer software” as defined in DFAR 252.227-7014 (June 1995), or as a “commercial item” as defined in FAR 2.101(a) or as “Restricted computer software” as defined in FAR 52.227-19 (June 1987) or any equivalent agency regulation or contract clause. Use, duplication or disclosure of Software is subject to Agilent Technologies’ standard commercial license terms, and non-DOD Departments and Agencies of the U.S. Government will receive no greater than Restricted Rights as defined in FAR 52.227-19(c)(1-2) (June 1987). U.S. Government users will receive no greater than Limited Rights as defined in FAR 52.227-14 (June 1987) or DFAR 252.227-7015 (b)(2) (November 1995), as applicable in any technical data.

ManualsPlus.com

In This Manual…

- **Description**, page 1
- **Specifications**, page 3
- **Care, Connection and Torque**, page 5

Assistance

Product maintenance agreements and other customer assistance agreements are available for Agilent Technologies products.

For assistance, contact Agilent Technologies (refer to "Contacting Agilent" on page iv).

ManualsPlus.com

Contacting Agilent

Online assistance: `www.agilent.com/find/assist`			
Americas			
Brazil *(tel)* (+55) 11 4197 3600 *(fax)* (+55) 11 4197 3800	**Canada** *(tel)* 877 894 4414 *(fax)* (+1) 905 282-6495	**Mexico** *(tel)* (+52) 55 5081 9469 *(alt)* 01800 5064 800 *(fax)* (+52) 55 5081 9467	**United States** *(tel)* (+1) 800 452 4844 *(alt)* (+1) 303 662 3999 *(tel)* (+1) 888 900 8921
Asia Pacific and Japan			
Australia (*tel*) 1800 629 485 (*alt*) 1800 143 243 (*fax*) 1800 142 134	**China** (*tel*) 800 810 0189 (*alt*) (+86) 10800 650 0021 (*fax*) 800 820 2816	**Hong Kong** (*tel*) 800 930 871 (*alt*) (+852) 3197 7889 (*fax*) (+852) 2 506 9233	**India** (*tel*) 1600 112 929 (*fax*) 000800 650 1101
Japan (*tel*) 0120 421 345 (*alt*) (+81) 426 56 7832 (*fax*) 0120 421 678	**Malaysia** (*tel*) 1800 888 848 (*alt*) 1800 828 848 (*fax*) 1800 801 664	**Singapore** (*tel*) 1800 375 8100 (*fax*) (+65) 6836 0252	**South Korea** (*tel*) 080 769 0800 (*alt*) (+82) 2 2004 5004 (*fax*) (+82) 2 2004 5115
Taiwan (*tel*) 0800 047 866 (*alt*) 00801 651 317 (*fax*) 0800 286 331	**Thailand** (*tel*) 1800 226 008 (*alt*) (+66) 2 268 1345 (*fax*) (+66) 2 661 3714		
Europe			
Austria (*tel*) 0820 87 44 11* (*fax*) 0820 87 44 22	**Belgium** (*tel*) (+32) (0)2 404 9340 (*alt*) (+32) (0)2 404 9000 (*fax*) (+32) (0)2 404 9395	**Denmark** (*tel*) (+45) 7013 1515 (*alt*) (+45) 7013 7313 (*fax*) (+45) 7013 1555	**Finland** (*tel*) 08 0052 4000 (*alt*) (+358) 10 855 2100 (*fax*) (+358) 92 536 0176
France (*tel*) 0825 010 700* (*alt*) (+33) (0)1 6453 5623 (*fax*) 0825 010 701*	**Germany** (*tel*) 01805 24 6333* (*alt*) 01805 24 6330* (*fax*) 01805 24 6336*	**Ireland** (*tel*) (+353) (0)1 890 924 204 (*alt*) (+353) (0)1 890 924 206 (*fax*)(+353) (0)1 890 924 024	**Israel** (*tel*) (+972) 3 9288 500 (*fax*) (+972) 3 9288 501
Italy (*tel*) (+39) (0)2 9260 8484 (*fax*) (+39) (0)2 9544 1175	**Luxemburg** (*tel*) (+32) (0)2 404 9340 (*alt*) (+32) (0)2 404 9000 (*fax*) (+32) (0)2 404 9395	**Netherlands** (*tel*) (+31) (0)20 547 2111 (*alt*) (+31) (0)20 547 2000 (*fax*) (+31) (0)20 547 2190	**Russia** (*tel*) (+7) 095 797 3963 (*alt*) (+7) 095 797 3900 (*fax*) (+7) 095 797 3901
Spain (*tel*) (+34) 91 631 3300 (*alt*) (+34) 91 631 3000 (*fax*) (+34) 91 631 3301	**Sweden** (*tel*) 0200 88 22 55* (*alt*) (+46) (0)8 5064 8686 (*fax*) 020 120 2266*	**Switzerland (French)** (*tel*) 0800 80 5353 opt. 2* (*alt*) (+33) (0)1 6453 5623 (*fax*) (+41) (0)22 567 5313	**Switzerland (German)** (*tel*) 0800 80 5353 opt. 1* (*alt*) (+49) (0)7031 464 6333 (*fax*) (+41) (0)1 272 7373
Switzerland (Italian) (*tel*) 0800 80 5353 opt. 3* (*alt*) (+39) (0)2 9260 8484 (*fax*) (+41) (0)22 567 5314	**United Kingdom** (*tel*) (+44) (0)7004 666666 (*alt*) (+44) (0)7004 123123 (*fax*) (+44) (0)7004 444555		
(tel) = primary telephone number; *(alt)* = alternate telephone number; *(fax)* = FAX number; * = in country number			

ManualsPlus.com

Safety and Regulatory Information

Review this product and related documentation to familiarize yourself with safety markings and instructions before you operate the instrument. This product has been designed and tested in accordance with international standards.

WARNING

The WARNING notice denotes a hazard. It calls attention to a procedure, practice, or the like, that, if not correctly performed or adhered to, could result in personal injury. Do not proceed beyond a WARNING notice until the indicated conditions are fully understood and met.

CAUTION

The **CAUTION** notice denotes a hazard. It calls attention to an operating procedure, practice, or the like, which, if not correctly performed or adhered to, could result in damage to the product or loss of important data. Do not proceed beyond a **CAUTION** notice until the indicated conditions are fully understood and met.

ManualsPlus.com

Instrument Markings

!	When you see this symbol on your instrument, you should refer to the instrument's instruction manual for important information.
	This symbol indicates hazardous voltages.
	The laser radiation symbol is marked on products that have a laser output.
~	This symbol indicates that the instrument requires alternating current (ac) input.
CE	The CE mark is a registered trademark of the European Community. If it is accompanied by a year, it indicates the year the design was proven.
	The CSA mark is a registered trademark of the Canadian Standards Association.
1SM1-A	This text indicates that the instrument is an Industrial Scientific and Medical Group 1 Class A product (CISPER 11, Clause 4).
|	This symbol indicates that the power line switch is ON.
	This symbol indicates that the power line switch is OFF or in STANDBY position.

ManualsPlus.com

Description

The Agilent R/Q/U/V 281 adapters have:

- Excellent repeatability
- Measurement versatility
- WR-28, WR-22, WR-19, WR-15 (R, Q, U, V band) waveguide
- Precision 1.85 mm and 2.4 mm coax connectors

Increased Measurement Versatility

Coax measurements to 65 GHz. The Agilent 281 family of precision millimeter waveguide-to-coax adapters offers a simple, low SWR transition between transmission media. Take advantage of stable, low loss and low SWR waveguide when measuring coaxial devices at higher frequencies. Or keep the convenience of coax, even when testing waveguide components. Agilent R/Q/U/V 281 adapters increase the versatility of existing test sets to measure both coax and waveguide components.

Excellent Accuracy

Low SWR transitions reduce mismatch uncertainty and excellent repeatability ensures consistent measurements. Available with both male and female connectors, these adapters help microwave engineers combine the best test components from each transmission media. With the Agilent R/Q/C1/V 281 adapters, engineers can balance the merits of coax and waveguide to achieve the best combination of accuracy, cost and ease-of-use.

ManualsPlus.com

Dimensions

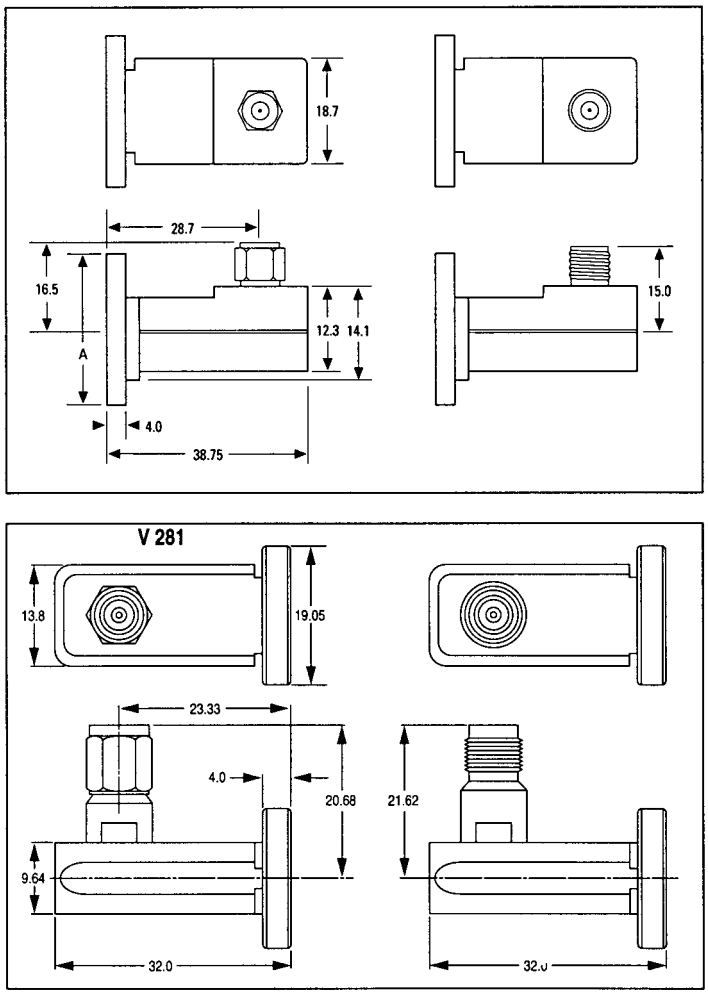

A=19.3 mm (R281)
A=28.7 mm (Q281)
A=28.7 mm (U281)

Figure 1 Dimensions in millimeters

ManualsPlus.com

Specifications

Specifications describe the instrument's warranted performance over the temperature range 0 to 55 °C (except where noted). The Supplemental Characteristics are typical but non-warranted performance parameters. They are denoted as "typical", "nominal", or "approximate".

Coax-to-Waveguide Adapters					Supplemental Characteristics	
Model	**Coax Connector Type**	**Waveguide Number**	**Frequency (GHz)**	**Return Loss[1]**	**Insertion Loss[2]**	**Repeatability [1,3] Typically Better Than:**
R281A	2.4 mm (female)	WR-28	26.5 to 40	≥24 dB	≤0.3 dB	≥ –50 dB
R281B	2.4 mm (male)	WR-28	26.5 to 40	≥24 dB	≤0.3 dB	≥ –50 dB
Q281A	2.4 mm (female)	WR-22	33 to 50	≥22 dB	≤0.3 dB	≥ –50 dB
Q281B	2.4 mm (male)	WR-22	33 to 50	≥22 dB	≤0.3 dB	≥ –50 dB
U281A	1.85 mm (female)	WR-19	40 to 60	≥22 dB[4]	≤0.5 dB	≥ –50 dB
U281B	1.85 mm (male)	WR-19	40 to 60	≥22 dB[4]	≤0.5 dB	≥ –50 dB
V281A	1.85 mm (female)	WR-15	50 to 67	≥20 dB	≤0.5 dB	≥ –50 dB
			67 to 70	≥20 dB (typical)	≤0.5 dB	≥ –50 dB
V281B	1.85 mm (male)	WR-15	50 to 67	≥20 dB	≤0.5 dB	≥ –50 dB
			67 to 70	≥20 dB (typical)	≤0.5 dB	≥ –50 dB

1. At the coaxial port only.
2. Typical maximum insertion loss for single adapter.
3. Repeatability = 20 Log $|\Delta\Gamma|$ where $|\Delta\Gamma| = |\Gamma m_1 - \Gamma m_2|$. This is the difference between two measurements Γm_1, and Γm_2 before and after one disconnect/connect cycle. Repeatability depend upon proper torque and pin-depth.
4. Typical for single adapter. Mated pair return loss warranted to ≥18 dB.

ManualsPlus.com

Environment

Non-operating environmental specifications apply to storage and shipment. Products should be stored in a clean, dry environment. Operating environmental specifications apply when the product is in use.

Characteristic	Non-Operating	Operating
Temperature	–55 to +75 °C	0 to +55 °C
Humidity	<95% relative at +40 °C	<95% relative at +40 °C
Altitude	≤15,300 m (50,000 ft)	<4,600 m (15,000 ft)

NOTE

Storage or operation within an environment other than that specified above may cause damage to the product and may void the warranty.

ManualsPlus.com

Care, Connection and Torque

Connector Torque and Pin Depth

Connector Type	Torque (±0.5 lb-in)	Torque Wrench Part Number	Connector Pin Depth (male or female)		Protection Gage Kit Part Number	End Cap Part Number
1.85 mm	8 lb-in (90 N-cm)	1250-1863	U281:	0 to 0.03 mm (0 to 0.0012 in)	85056-60018 (male) 85056-60017 (female)	1401-0202 (female) 1401-0095 (male)
			V281:	0 to 0.0152 mm (0 to 0.0006 in)		
2.4 mm	8 lb-in (90 N-cm)	1250-1863		0 to 0.038 mm (0 to 0.0015 in)	11752-60108 (male) 11752-60107 (female)	1401-0202 (female) 1401-0095 (male)

Mating 2.4 mm connectors with 1.85 mm connectors

The 1.85 mm coaxial end of the Agilent U/V281AB adapters can be mated with 2.4 mm connectors.

ManualsPlus.com