ManualsPlus.com

Calibration Guide

Agilent Technologies 8560 E-Series and EC-Series Spectrum Analyzers

Agilent Technologies

Manufacturing Part Number: 08560-90160
Supersedes December 1999

Printed in USA

November 2000

© Copyright 1991-2000 Agilent Technologies, Inc.

ManualsPlus.com

Notice

The information contained in this document is subject to change without notice.

Agilent Technologies makes no warranty of any kind with regard to this material, including but not limited to, the implied warranties of merchantability and fitness for a particular purpose. Agilent Technologies shall not be liable for errors contained herein or for incidental or consequential damages in connection with the furnishing, performance, or use of this material.

Certification

Agilent Technologies certifies that this product met its published specifications at the time of shipment from the factory. Agilent Technologies further certifies that its calibration measurements are traceable to the United States National Institute of Standards and Technology, to the extent allowed by the Institute's calibration facility, and to the calibration facilities of other International Standards Organization members.

Regulatory Information

The specifications and characteristics chapters and *General Regulatory and Safety Information* chapter in this manual contain regulatory information.

Warranty

This Agilent Technologies instrument product is warranted against defects in material and workmanship for a period of one year from date of shipment. During the warranty period, Agilent Technologies will, at its option, either repair or replace products which prove to be defective.

For warranty service or repair, this product must be returned to a service facility designated by Agilent Technologies. Buyer shall prepay shipping charges to Agilent Technologies and Agilent Technologies shall pay shipping charges to return the product to Buyer. However, Buyer shall pay all shipping charges, duties, and taxes for products returned to Agilent Technologies from another country.

ManualsPlus.com

Agilent Technologies warrants that its software and firmware designated by Agilent Technologies for use with an instrument will execute its programming instructions when properly installed on that instrument. Agilent Technologies does not warrant that the operation of the instrument, or software, or firmware will be uninterrupted or error-free.

LIMITATION OF WARRANTY

The foregoing warranty shall not apply to defects resulting from improper or inadequate maintenance by Buyer, Buyer-supplied software or interfacing, unauthorized modification or misuse, operation outside of the environmental specifications for the product, or improper site preparation or maintenance.

NO OTHER WARRANTY IS EXPRESSED OR IMPLIED. AGILENT TECHNOLOGIES SPECIFICALLY DISCLAIMS THE IMPLIED WARRANTIES OF MERCHANTABILITY AND FITNESS FOR A PARTICULAR PURPOSE.

EXCLUSIVE REMEDIES

THE REMEDIES PROVIDED HEREIN ARE BUYER'S SOLE AND EXCLUSIVE REMEDIES. AGILENT TECHNOLOGIES SHALL NOT BE LIABLE FOR ANY DIRECT, INDIRECT, SPECIAL, INCIDENTAL, OR CONSEQUENTIAL DAMAGES, WHETHER BASED ON CONTRACT, TORT, OR ANY OTHER LEGAL THEORY.

Assistance

Product maintenance agreements and other customer assistance agreements are available for Agilent Technologies products.

For any assistance, contact your nearest Agilent Technologies Sales and Service Office.

Cleaning

The instrument front and rear panels should be cleaned using a soft cloth with water or a mild soap and water mixture.

ManualsPlus.com

General Safety Considerations

WARNING ***Before this instrument is switched on,*** **make sure it has been properly grounded through the protective conductor of the ac power cable to a socket outlet provided with protective earth contact.**

Any interruption of the protective (grounding) conductor, inside or outside the instrument, or disconnection of the protective earth terminal can result in personal injury.

WARNING **There are many points in the instrument which can, if contacted, cause personal injury. Be extremely careful.**

Any adjustments or service procedures that require operation of the instrument with protective covers removed should be performed only by trained service personnel.

CAUTION *Before this instrument is switched on,* make sure its primary power circuitry has been adapted to the voltage of the ac power source.

Failure to set the ac power input to the correct voltage could cause damage to the instrument when the ac power cable is plugged in.

Differences between Agilent Technologies 8560 E-Series and EC-Series Spectrum Analyzers

1. EC-series analyzers use a color LCD display which is not adjustable. E-series instruments use a monochrome CRT display which can be adjusted for focus and intensity. E-series analyzers use a high-voltage module (HVM), located in the power supply, to supply power to the CRT. EC-series analyzers do not use an HVM.
2. EC-series analyzers offer fast analog-to-digital-conversion (FADC) digitized sweep times as a standard feature. EC-series FADC circuitry is integrated into the A2 controller board. E-series instruments offer FADC feature as an option (Option 007) which is implemented through the use of the A16 FADC board. FADC enables you to view displays with fast sweep times, between 30 ms and 50 µs.
3. EC-series instruments offer a rear-panel VGA connection as a standard feature. E-series instruments do not have a rear-panel VGA connector. The VGA connection is always active and does not require user activation.

In all other operational respects the 8560 EC-series and E-series are identical.

ManualsPlus.com

1. Using Operation Verification Software – Volume I
What You'll Find in This Chapter 12
Getting Started 13
Using Operation Verification 22
Operation Verification Menu Softkeys 34
Test Descriptions 36
10 MHz Reference Accuracy 37
1ST LO OUTPUT Amplitude Accuracy 38
Calibrator Amplitude Accuracy 39
Displayed Average Noise Level 40
Fast Sweep Time Accuracy 41
Frequency Readout/Frequency Counter Accuracy 42
Frequency Response 43
Frequency Span Accuracy 45
IF Gain Uncertainty 46
Image and Multiple Responses 47
Input Attenuator Switching Uncertainty 48
Noise Sidebands 49
RES BW Accuracy and Selectivity 50
RES BW Switching and IF Alignment Uncertainty 51
Residual FM 52
Scale Fidelity 53
Second Harmonic Distortion 54
Operation Verification Error Messages 56

2. 8560E/EC Specifications and Characteristics
Specifications and Characteristics 64
Calibration Cycle 64
Frequency Specifications 65
Amplitude Specifications 73
Tracking Generator Specifications (Option 002) 80
Inputs and Outputs Specifications 82
General Specifications 83
Frequency Characteristics 87
Amplitude Characteristics 91
Option 002 Tracking Generator Characteristics 93
Inputs and Outputs Characteristics 94
Regulatory Information 98

3. 8561E/EC Specifications and Characteristics
Specifications and Characteristics 102
Calibration Cycle 103
Frequency Specifications 104
Amplitude Specifications 112
Inputs and Outputs Specifications 119
General Specifications 120
Frequency Characteristics 124
Amplitude Characteristics 128

ManualsPlus.com

Inputs and Outputs Characteristics 130
Regulatory Information 134

4. 8562E/EC Specifications and Characteristics
Specifications and Characteristics 138
Calibration Cycle 139
Frequency Specifications 140
Amplitude Specifications 149
Inputs and Outputs Specifications 157
General Specifications 158
Frequency Characteristics 162
Amplitude Characteristics 166
Inputs and Outputs Characteristics 169
Regulatory Information 173

5. 8563E/EC Specifications and Characteristics
Specifications and Characteristics 178
Calibration Cycle 179
Frequency Specifications 180
Amplitude Specifications 189
Inputs and Outputs Specifications 197
General Specifications 198
Frequency Characteristics 202
Amplitude Characteristics 206
Inputs and Outputs Characteristics 209
Regulatory Information 213

6. 8564E/EC Specifications and Characteristics
Specifications and Characteristics 218
Calibration Cycle 219
Frequency Specifications 220
Amplitude Specifications 229
Inputs and Outputs Specifications 237
General Specifications 238
Frequency Characteristics 242
Amplitude Characteristics 246
Inputs and Outputs Characteristics 250
Regulatory Information 254

7. 8565E/EC Specifications and Characteristics
Specifications and Characteristics 258
Calibration Cycle 259
Frequency Specifications 260
Amplitude Specifications 269
Inputs and Outputs Specifications 277
General Specifications 278
Frequency Characteristics 282
Amplitude Characteristics 286

ManualsPlus.com

Inputs and Outputs Characteristics 290
Regulatory Information 294

8. Using Performance Tests: 3335A Source not Available
What You'll Find in This Chapter 298
Before You Start 299
Required Test Equipment 301
11a. Resolution Bandwidth Switching and IF Alignment Uncertainty 308
12a. Resolution Bandwidth Accuracy and Selectivity 312
13a. Input Attenuator Switching Uncertainty: 8560E/EC, 8561E/EC, 8562E/EC, and 8563E/EC 321
14a. Input Attenuator Switching Uncertainty: 8564E/EC and 8565E/EC 329
15a. IF Gain Uncertainty 338
16a. Scale Fidelity 346
33a. Second Harmonic Distortion: 8560E/EC 359
34a. Second Harmonic Distortion: Agilent 8561E/EC 361
36a. Frequency Response: 8560E/EC 366
37a. Frequency Response: 8561E/EC 378
38a. Frequency Response: 8562E/EC 394
39a. Frequency Response: Agilent 8563E/EC 417
40a. Frequency Response: Agilent 8564E/EC 436
41a. Frequency Response: Agilent 8565E/EC 458
43a. Third Order Intermodulation Distortion: 8560E/EC 480
44a. Third Order Intermodulation Distortion: Agilent 8561E/EC 484
45a. Third Order Intermodulation Distortion: Agilent 8562E/EC, Agilent 8563E/EC 491
46a. Third Order Intermodulation Distortion: Agilent 8564E/EC, Agilent 8565E/EC 500

9. General Regulatory and Safety Information
Safety Symbols 510
General Safety Considerations 511

10. Using Performance Tests – Volume II
What You'll Find in This Chapter 514
Performance Tests versus Operation Verification 515
Before You Start 516
85629B Functional Tests 521
Running the Functional Tests 523
1. 10 MHz Reference Output Accuracy 534
2. 10 MHz Reference Output Accuracy (Option 103) 538
3. Fast Sweep Time Accuracy (EC-Series and E-Series with Option 007) 540
4. Calibrator Amplitude Accuracy 542
5. Displayed Average Noise Level: 8560E/EC 544
6. Displayed Average Noise Level: 8561E/EC 550
7. Displayed Average Noise Level: 8562E/EC 556
8. Displayed Average Noise Level: 8563E/EC 563
9. Displayed Average Noise Level: 8564E/EC 571
10. Displayed Average Noise Level: 8565E/EC 580

ManualsPlus.com

11. Resolution Bandwidth Switching and IF Alignment Uncertainty 590
12. Resolution Bandwidth Accuracy and Selectivity 593
13. Input Attenuator Switching Uncertainty: 8560E/EC, 8561E/EC, 8562E/EC/, 8563E/EC. . . 601
14. Input Attenuator Switching Uncertainty: 8564E/EC, 8565E/EC 608
15. IF Gain Uncertainty 615
16. Scale Fidelity 620
17. Residual FM 630
18. Noise Sidebands: 8560E, 8561E, and 8563E 633
19. Noise Sidebands 636
20. Image, Multiple, and Out-of-Range Responses: 8560E/EC 640
21. Image, Multiple, Out-of-Band, and Out-of-Range Responses: 8561E/EC 643
22. Image, Multiple, and Out-of-Band Responses: 8562E/EC 647
23. Image, Multiple, and Out-of-Band Responses: 8563E/EC 651
24. Image, Multiple, and Out-of-Band Responses: 8564E/EC 657
25. Image, Multiple, and Out-of-Band Responses: 8565E/EC 664
26. Frequency Readout/Frequency Count Marker Accuracy: 8560E/EC 672
27. Frequency Readout/Frequency Count Marker Accuracy: 8561E/EC 675
28. Frequency Readout Accuracy/Frequency Count Marker Accuracy: 8562E/EC 678
29. Frequency Readout Accuracy/Frequency Count Marker Accuracy: 8563E/EC 681
30. Frequency Readout Accuracy/Frequency Count Marker Accuracy: 8564E/EC 685
31. Frequency Readout Accuracy/Frequency Count& Marker Accuracy: 8565E/EC. 689
32. Pulse Digitization Uncertainty 694
33. Second Harmonic Distortion: 8560E/EC 698
34. Second Harmonic Distortion: 8561E/EC 700
35. Second Harmonic Distortion: 8562E/EC, 8563E/EC, 8564E/EC, 8565E/EC 705
36. Frequency Response: 8560E/EC 712
37. Frequency Response: 8561E/EC 723
38. Frequency Response: 8562E/EC 738
39. Frequency Response: 8563E/EC 758
40. Frequency Response: 8564E/EC 774
41. Frequency Response: 8565E/EC 793
42. Frequency Span Accuracy 813
43. Third Order Intermodulation Distortion: 8560E/EC 816
44. Third Order Intermodulation Distortion: 8561E/EC 820
45. Third Order Intermodulation Distortion: 8562E/EC, 8563E/EC 826
46. Third Order Intermodulation Distortion: 8564E/EC, 8565E/EC 834
47. Gain Compression: 8560E/EC 842
48. Gain Compression: 8561E/EC 845
49. Gain Compression: 8562E/EC, 8563E/EC 849
50. Gain Compression: 8564E/EC, 8565E/EC 854
51. 1ST LO OUTPUT Amplitude: 8560E/EC 859
52. 1ST LO OUTPUT Amplitude: 8561E/EC, 8562E/EC, 8563E/EC, 8564E/EC,8565E/EC 863
53. Sweep Time Accuracy 866
54. Residual Responses: 8560E/EC 872
55. Residual Responses: 8561E/EC 875
56. Residual Responses: 8562E/EC, 8563E/EC, 8564E/EC, 8565E/EC 878
57. IF INPUT Amplitude Accuracy 881
58. Gate Delay Accuracy and Gate Length Accuracy 884

ManualsPlus.com

59. Delayed Sweep Accuracy 890
60. Tracking Generator Level Flatness 893
61. Absolute Amplitude and Vernier Accuracy 897
62. Maximum Leveled Output Power 900
63. Power Sweep Range 903
64. RF-Power-Off Residuals 906
65. Harmonic Spurious Outputs 909
66. Non-Harmonic Spurious Outputs 913
67. LO Feedthrough Amplitude 919
68. Tracking Generator Feedthrough 922
69. Frequency Tracking Range 926
70. Tracking Generator Frequency Accuracy 929

11. 8560E/EC Performance Test Record
Test Record 934

12. 8561E/EC Performance Test Record
Test Record 958

13. 8562E/EC Performance Test Record
Test Record 980

14. 8563E/EC Performance Test Record
Test Record 1002

15. 8564E/EC Performance Test Record
Test Record 1028

16. 8565E/EC Performance Test Record
Test Record 1058

ManualsPlus.com

ManualsPlus.com

1 Using Operation Verification Software – Volume I

ManualsPlus.com

What You'll Find in This Chapter

This automated test software is designed to give a high confidence level of spectrum analyzer operation in a reasonable amount of time. Instructions for using the software, brief descriptions of the tests, and a list of the software error messages are included in this chapter. Refer to Table 1-3, on page 20, for the names of manual performance tests that are not included in the automated operation verification software.

What Is Operation Verification?

Operation Verification automates many of the performance tests. It is recommended as a check of instrument operation for incoming inspection or after a repair. It performs 80 to 85 percent of the manual performance tests in less than 60 minutes (75 minutes for the Agilent 8564E/EC and Agilent 8565E/EC). It is designed to test an instrument operating within a 20 °C to 30 °C temperature range using a minimum set of test equipment. Refer to Table 1-1, on page 16 for a list of tests performed.

If a test does not pass, the related manual performance test needs to be run. Related manual performance tests are listed at the top of each operation verification test description and the test procedures are in “Using Performance Tests” Chapter 10, of Volume II of the calibration guide.

Operation Verification versus Performance Tests

The performance tests verify that the analyzer performance meets all specifications. Performance verification consists of executing all of the manual performance tests. It is time-consuming and requires extensive test equipment.

ManualsPlus.com

Getting Started

First, make sure you have a compatible controller (computer), the proper test equipment, and a printer for recording test results. The following paragraphs describe requirements for controllers, test equipment, and printers. Once the proper equipment is identified, proceed to “Equipment Connections.”

Spectrum Analyzers

The 8560 E-Series and EC-Series Operation and Verification software tests the following spectrum analyzers:

Spectrum Analyzer	Software Revision
8560E/EC	all
Agilent 8561E/EC	all
Agilent 8562E/EC	D.00.00 and later
Agilent 8563E/EC	all
Agilent 8564E/EC	C.00.00 and later
Agilent 8565E/EC	C.00.00 and later

Errors will occur if this software is used to test spectrum analyzers other than those listed above. Other versions of the operation verification software are available for testing other 8560 Series spectrum analyzers.

Controller (Computer)

Operation Verification software requires using any combination of one of the following controllers and the HP BASIC operating system:

Controller
9000 model 216
9000 model 236
9000 model 310

ManualsPlus.com

Operating System
HP BASIC 2.0 with extensions 2.1
HP BASIC 3.0 and required BIN files
HP BASIC 4.0 and required BIN files

Other 9000 Series 300 controllers are compatible with the Operation Verification software; however, the graph printouts might not be full width. This is especially true with medium- and high-resolution displays.

The Operation Verification program requires at least 500K of free memory. The computer can have either single or dual GPIB ports. Refer to "Dual-Bus Operation," on page 28, under "Using Operation Verification," on page 22, for information on using the program with dual GPIB ports.

Test Equipment

Table 1-1, on page 16, lists the operation verification tests and the test equipment required for each test. You do not need all the test equipment connected to perform operation verification. You need only connect the equipment specified in each test to run that test.

NOTE The Agilent 3335A Synthesizer Level Generator, which is used in several operation verification tests, has been obsoleted. If an Agilent 3335A is not available, alternate test equipment can be used to perform comparable tests manually. Chapter 8 in this volume contains the information on alternate test equipment and manuals test procedures you will need to perform these tests.

Table 1-2, on page 19, summarizes the equipment required to run the Operation Verification tests. Some tests, like 10 MHz Reference Accuracy, can use various model numbers of a particular equipment type. Information about selecting the equipment model number you want to use is provided in "Setting GPIB Addresses," on page 25, in this chapter under "Using Operation Verification," on page 22.

NOTE The validity of Operation Verification program measurements depends in part on required test equipment measurement accuracy. Verify proper calibration of test equipment before testing the analyzer with the software.

ManualsPlus.com

Printers

All test results are sent to a GPIB printer. The program does not run without being connected to a GPIB printer. Virtually any GPIB graphics workstation printer can work. These tests have been run using the HP ThinkJet, 2671G, 82906A, and 9876G printers.

Warmup Time

Test Equipment Warmup Allow sufficient warmup time for test equipment. Refer to their individual operating and service manuals for warmup specifications.

Spectrum Analyzer Warmup Warm the spectrum analyzer up for at least five minutes before performing the first test.

NOTE Since the preselector in the Agilent 8561E/EC, Agilent 8562E/EC, Agilent 8563E/EC, Agilent 8564E/EC and Agilent 8565E/EC spectrum analyzers is not peaked during the Frequency Response test, allow a 30 minute warmup at 20 °C to 30 °C before beginning this test. If you start running All Tests after five-minute warmup, the spectrum analyzer will have warmed up for 30 minutes by the time the Frequency Response test begins.

ManualsPlus.com

Table 1-1 Equipment Required for Each Operation Verification Test

Test Name	Equipment Required					
	Agilent 8560E/EC	**Agilent 8561E/EC**	**Agilent 8562E/EC**	**Agilent 8563E/EC**	**Agilent 8564E/EC**	**Agilent 8565E/EC**
10 MHz Reference Accuracy	5342A, 5343A, or 5350B*	5342A, 5343A, or 5350B*	5342A, 5343A, or 5350B*	5342A, 5343A, or 5350B*	5342A, 5343A, or 5350B*	5342A, 5343A, or 5350B*
1ST LO OUTPUT Amplitude Accuracy	8902A *or* 436A *or* 438A 8485A *or* 8481A	8902A *or* 436A *or* 438A 8485A *or* 8481A	8902A *or* 436A *or* 438A 8485A *or* 8481A	8902A *or* 436A *or* 438A 8485A *or* 8481A	8902A *or* 436A *or* 438A 8485A *or* 8481A	8902A *or* 436A *or* 438A 8485A *or* 8481A
Calibrator Amplitude Accuracy	8902A, 436A *or* 438A 8481A, *or* 8482A	8902A, 436A *or* 438A 8481A, *or* 8482A	8902A, 436A *or* 438A 8481A, *or* 8482A	8902A, 436A *or* 438A 8481A, *or* 8482A	8902A, 436A *or* 438A 8481A, *or* 8482A	8902A, 436A *or* 438A 8481A, *or* 8482A
Displayed Average Noise Level	909D	909D	909D	909D	85138B	85138B
Fast Sweep Time Accuracy	5342A, 5343A, or 5350B**	5342A, 5343A, or 5350B**	5342A, 5343A, or 5350B**	5342A, 5343A, or 5350B**	5342A, 5343A, or 5350B**	5342A, 5343A, or 5350B**
Frequency Readout/ Counter Accuracy	8340A/B *or* 83640A *or* 83650A 8120-4921	8340A/B *or* 83640A *or* 83650A 8120-4921	8340A/B *or* 83640A *or* 83650A 8120-4921	8340A/B *or* 83640A *or* 83650A 8120-4921	83640A *or* 83650A 8120-6164	83650A 8120-6164
Frequency Span Accuracy	8340A/B *or* 83640A *or* 83650A 11667A/B 8120-4921	8340A/B *or* 83640A *or* 83650A 11667A/B 8120-4921	8340A/B *or* 83640A *or* 83650A 11667A/B 8120-4921	8340A/B *or* 83640A *or* 83650A 11667B 8120-4921	83640A *or* 83650A 11667C 8120-6164	83650A 11667C 8120-6164

ManualsPlus.com

Table 1-1 Equipment Required for Each Operation Verification Test

Test Name	Equipment Required					
	Agilent 8560E/EC	**Agilent 8561E/EC**	**Agilent 8562E/EC**	**Agilent 8563E/EC**	**Agilent 8564E/EC**	**Agilent 8565E/EC**
Frequency* Response	8340A/B *or* 83640A *or* 83650A 3335A 8902A *or* 436A *or* 438A 8482A 11667A/B 8120-4921	8340A/B *or* 83640A *or* 83650A 3335A 8902A *or* 436A *or* 438A 8481A 11667A/B 8120-4921	8340A/B *or* 83640A *or* 83650A 3335A 8902A *or* 436A *or* 438A 8481A 11667A/B 8120-4921	8340A/B *or* 83640A *or* 83650A 3335A 8902A *or* 436A *or* 438A 8485A 11667B 8120-4921	83640A *or* 83650A 3335A 8902A *or* 436A *or* 438A 8487A 11667C 8120-6164	83650A 3335A 8902A *or* 436A *or* 438A 8487A 11667C 8120-6164
IF Gain* Uncertainty	3335A	3335A	3335A	3335A	3335A	3335A
Image and Multiple Responses	8340A/B *or* 83640A *or* 83650A 8902A *or* 436A *or* 438A 8481A 11667A/B 8120-4921	8340A/B *or* 83640A *or* 83650A 8902A *or* 436A *or* 438A 8481A 11667A/B 8120-4921	8340A/B *or* 83640A *or* 83650A 8902A *or* 436A *or* 438A 8481A 11667A/B 8120-4921	8340A/B *or* 83640A *or* 83650A 8902A *or* 436A *or* 438A 8485A 11667B 8120-4921	83640A *or* 83650A 8902A *or* 436A *or* 438A 8487A 11667C 8120-6164	83650A 8902A *or* 436A *or* 438A 8487A 11667C 8120-6164
Input* Attenuator Switching Uncertainty	3335A	3335A	3335A	3335A	3335A	3335A
Noise Sidebands	8662A *or* 8663A *or* CAL OUTPUT signal	8662A *or* 8663A *or* CAL OUTPUT signal	8662A *or* 8663A *or* CAL OUTPUT signal	8662A *or* 8663A *or* CAL OUTPUT signal	8662A *or* 8663A *or* CAL OUTPUT signal	8662A *or* 8663A *or* CAL OUTPUT signal
RES BW* Accuracy/ Selectivity	3335A	3335A	3335A	3335A	3335A	3335A

ManualsPlus.com

Table 1-1 Equipment Required for Each Operation Verification Test

Test Name	Equipment Required					
	Agilent 8560E/EC	**Agilent 8561E/EC**	**Agilent 8562E/EC**	**Agilent 8563E/EC**	**Agilent 8564E/EC**	**Agilent 8565E/EC**
RES BW* Switching Uncertainty	3335A	3335A	3335A	3335A	3335A	3335A
Residual FM	8662A *or* 8663A	8662A *or* 8663A	8662A *or* 8663A	8662A *or* 8663A	8662A *or* 8663A	8662A *or* 8663A
Scale* Fidelity	3335A	3335A	3335A	3335A	3335A	3335A
Second Harmonic Distortion	8340A/B *or* 83640A *or* 83650A 8902A *or* 436A *or* 438A 8485A *or* 8481A 11667A/B 0955-0306 8120-4921	8340A/B *or* 83640A *or* 83650A 8902A *or* 436A *or* 438A 8485A *or* 8481A 11667A/B 11689A *(2 required)* 0955-0306 8120-4921	8340A/B *or* 83640A *or* 83650A 8902A *or* 436A *or* 438A 8485A *or* 8481A 11667A/B 11689A *(2 required)* 0955-0306 8120-4921	8340A/B *or* 83640A *or* 83650A 8902A *or* 436A *or* 438A 8485A *or* 8481A 11667B 11689A *(2 required)* 0955-0306 8120-4921	83640A *or* 83650A 8902A *or* 436A *or* 438A 8485A *or* 8481A 11667C 11689A *(2 required)* 0955-0306 8120-6164	83650A 8902A *or* 436A *or* 438A 8485A *or* 8481A 11667C 11689A *(2 required)* 0955-0306 8120-6164

* The 3335A Synthesizer Level Generator, which is used in several operation verification tests, has been obsoleted. If an 3335A is not available, alternate test equipment can be used to perform comparable tests manually. Chapter 8 in this volume contains the information on alternate test equipment and manuals test procedures you will need to perform these tests.

* *The Agilent 5350B is supported only in software revision D.00.00 and later.

ManualsPlus.com

Table 1-2 Required Test Equipment Summary

Type of Equipment	Model Number
Controller*	Series 200 9000 model 216 (9816) 9000 model 236 (9836) or 9000 model 310
Synthesizer/level generator	3335A
Synthesized sweeper (10 MHz to 26.5 GHz) (10 MHz to 40 GHz) (10 MHz to 50 GHz)	8340A/B (8560E/EC, 8561E/EC, 8562E/EC, and 8563E/EC) 85640A (8564E/EC) 85650A (8565E/EC)
Synthesized signal generator	8662A/8663A
Measuring receiver	8902A
Power meter	436A or 438A (alternate)
Microwave frequency counter	5343A
Microwave frequency counter	5342A (alternate)
Microwave frequency counter	5350B (alternate) †
Power sensor (100 kHz to 4.2 GHz)	8482A
Power sensor (50 MHz to 26.5 GHz) (50 MHz to 50 GHz)	8485A (8560E/EC, 8561E/EC, 8562E/EC, and 8563E/EC) 8487A (8564E/EC and 8565E/EC)
Power sensor (10 MHz to 18 GHz)	8481A (alternate for 8560E/EC, 8561E/EC, and 8562E/EC)
Power splitter (dc to 18 GHz) (dc to 26.5 GHz) (dc to 50 GHz)	11667A (8560E/EC, 8561E/EC, and 8562E/EC) 11667B (8560E/EC, 8561E/EC, 8562E/EC, and 8563E/EC) 11667C (8564E/EC and 8565E/EC)
4.4 GHz low-pass filter *(two required)*	11689A (8561E/EC, 8562E/EC, 8563E/EC, 8564E/EC, and 8565E/EC)
50 Ω termination (dc to 26.5 GHz) (dc to 50 GHz)	909D (8560E/EC, 8561E/EC, 8562E/EC, and 8563E/EC) 85138B (8564E/EC and 8565E/EC)
50 MHz low-pass filter	0955-0306
Miscellaneous cables and adapters	As per test setup
GPIB printer	See “Printers”

* 500 kilobytes of free memory is required for the test program.

† Th 5350B is supported only in software revision D.00.00 and later.

ManualsPlus.com

Table 1-3 Manual Performance Tests That Are Not Automated

Pulse Digitization Uncertainty
Third Order Intermodulation Distortion
Gain Compression
Sweep Time Accuracy
Residual Responses
IF Input Amplitude Accuracy
Gate Delay Accuracy and Gate Length Accuracy
Delayed Sweep Accuracy
These tests apply only to 8560E/EC Option 002:
Tracking Generator Level Flatness
Absolute Amplitude and Vernier Accuracy
Maximum Leveled Output Power
Power Sweep Range
RF-Power-Off Residuals
Harmonic Outputs
Non-Harmonic Outputs
Tracking Generator Feedthrough
LO Feedthrough Amplitude
Frequency Tracking Range
Tracking Generator Frequency Accuracy

Equipment Connections

Computer (Controller) Setup

For 9000 model 216 or model 236 computers, setup instructions are provided in Chapter 1, “Computer Installation,” of the *BASIC Operating Manual*. For 9000 model 310 computers, setup information is provided in *Configuration Reference Manual* for Series 300 computers.

ManualsPlus.com

GPIB Cables

All test equipment controlled by GPIB should be connected to the internal GPIB of the controller (select code 7). If the controller has only one GPIB connector, connect the spectrum analyzer to it as well. If the controller has dual GPIB connectors, connect the spectrum analyzer under test to the second GPIB (typically, select code 8).

10 MHz Reference

The 10 MHz REF IN/OUT on the spectrum analyzer under test should be connected to the synthesized sweeper external frequency reference. That is, it should be connected to the FREQUENCY STANDARD EXT of the 8340A/B or the 10MHz REF INPUT of the 83640A or 83650A.

Connect the synthesized sweeper 10 MHz REF OUTPUT to the 40/N MHz REF INPUT of the 3335A. *Do not* connect the spectrum analyzer 10 MHz REF IN/OUT to the external frequency reference input of the 8663A; doing so invalidates the Noise Sidebands test results.

NOTE Terminate the 3335A 10 MHz REF OVEN OUTPUT in 50 Ω. Do not connect the 10 MHz output to the external frequency reference input of any other test equipment.

Test Setups

Test setups for each test are included with the test. These are in the “Test Descriptions” section of this chapter. The program prompts the operator to make appropriate equipment connections if the correct equipment setup is not detected.

ManualsPlus.com

Using Operation Verification

Loading the Program

Load BASIC into the computer. BASIC choices are:

- BASIC 2.0 and extensions 2.1
- BASIC 3.0 or 4.0, which must include the following binaries:

  MAT

  IO

  GRAPH

  GRAPHX

  PDEV

  IB

  MS

  CLOCK

  CS80

  DISC

  KBD

For configuration instructions, refer to the *BASIC Operating Manual*. Next, insert the Operation Verification software disk into the disk drive, then type:

```
LOAD "VERIFY_6XE",1
```

NOTE A double-sided disk drive must be used. The Operation Verification software will not fit on a single-sided formatted disk.

Press **EXECUTE** on 9000 Series 200 computers, or **RETURN** on 9000 Series 300 computers, to load the software and start the program running.

ManualsPlus.com

Program Operation

Operation Verification consists of three menus. They are the Conditions Menu, the Test Menu, and the Sensor Utilities Menu, which are accessed from the Conditions Menu. Program operation is controlled through a combination of softkeys and user prompts. Some prompts, primarily in the Conditions and Sensor Utilities Menus, require computer keyboard entries. Terminate keyboard entries with the **RETURN** or **ENTER** key. Most prompts, however, tell the user what to do next or provide informational messages.

If the message `(any key)` follows a prompt, pressing any key on the keyboard continues the program. If the message `(any key or `Q' to quit)` follows a prompt, pressing any key except `Q` continues the program. Pressing `Q` terminates the current procedure at the next, most logical point in the program.

Conditions Menu

The first menu screen displayed is the Conditions Menu. The pointer displayed along the left edge of the screen may be moved with the knob (if one is present) or the up (⇑) and down (⇓) arrow keys. Notice that the menu has two pages. Moving the pointer below the last entry on the page brings up the next page. Similarly, moving the pointer above the first entry on a subsequent page brings up the preceding page. The two pages of the Conditions Menu have a four-line overlap. The last four lines of page 1 appear as the first four lines on page 2.

ManualsPlus.com

Test Record Header Information

The information in the first six entries of this menu is printed out as part of the operation verification test record. The spectrum analyzer model number and serial number are stored in the analyzer memory. Software revisions before C.00.00 will not display the complete list of options if there are more than two. The program queries these numbers via GPIB and displays them. If the spectrum analyzer under test does not respond at the address listed under GPIB Addresses, or no address is listed, a message appears where the model and serial numbers are normally displayed.

The program also queries the time and date in the computer. If an 9000 Series 200 computer is used, it might be necessary to reset the time and date; 9000 Series 300 computers have built-in real-time clocks.

Entries for Operator, Test Conditions, and Other Comments are optional. Blank spaces are provided on the test record if no entry is made. To make or to change an entry, move the pointer to the line where the entry is to be made or changed. Press **Change Entry** and type in your new entry. Entries for Operator, Test Conditions, and Other Comments can be up to 37 characters long, but only the first 25 characters of the Operator entry are printed on the test record.

System Mass Storage File Location

Calibration factor data for different power sensors and a customized set of conditions may be stored on disk. The mass storage unit specifier (msus) for the disk containing this information should be entered as the system mass storage file location. Refer to the *BASIC Operating Techniques Manual* for information on the syntax of the msus. Software revision C.00.00 and later allows a system mass storage file location with more than 37 characters though only the first and last 17 characters will be displayed.

The Operation Verification program disk comes write-protected from the factory. If you want to use this disk for storing your power sensor and conditions data files, it is necessary to disable the write-protect mechanism.

NOTE A double-sided disk drive must be used. The Operation Verification software will not fit on a single-sided formatted disk.

ManualsPlus.com

Power Sensors

The Operation Verification program supports four models of power sensors, but only two models are necessary to run all the tests. The Agilent 8481A may be substituted for the Agilent 8482A. The Agilent 8485A is required for the Agilent 8562E/EC and Agilent 8563E/EC, and the Agilent 8487A is required for the Agilent 8564E/EC and Agilent 8565E/EC. Refer to "Sensor Utilities Menu," on page 28, for more information regarding storing, viewing, editing, and purging cal factor data for power sensors.

To select a particular sensor of a certain model number, move the pointer to the desired model number and press **Change Entry**. Enter the last five digits of the power sensor serial number (that is, the serial number suffix). The program checks to see that a data file containing the cal factor data for that particular sensor exists.

To create, edit, view, or purge power sensor cal factor data files, press **Sensor Utils** to bring up the Sensor Utilities Menu. Refer to "Sensor Utilities Menu," on page 28, in this chapter for more information.

A `WARNING` message appears if the program does not find a data file for the sensor. If this occurs, check that the system mass storage file location specifies the disk where the power sensor data resides. If the system mass storage file location is correct, the cal factor data for that particular sensor has not been stored.

NOTE Power sensor data files created using the `VERIFY_62` Operation Verification software (for 8560A/61A/61B/62A/62B/63A spectrum analyzers) are not compatible with the `VERIFY_6XE` Operation Verification software.

Refer to "Sensor Utilities Menu," on page 28, in this chapter for additional information.

Setting GPIB Addresses

The last 11 lines (last 12 lines, for revision D.00.00 and later) of the Conditions Menu are for selecting the GPIB addresses of test equipment used for the Operation Verification program. It is not necessary to use all the test equipment listed. Some model numbers listed are "alternates." Table 1-1, on page 16, lists the test equipment required for each test and Table 1-2, on page 19, lists model numbers allowed for a particular type of test equipment.

NOTE For software revisions B.01.00 and earlier, the Conditions Menu has two entries for Agilent 8340A/B synthesized sweepers. Only Agilent 8340A/B #1 is used.

Software revisions D.00.00 and later have an entry for an Agilent 5350 Series microwave frequency counter.

ManualsPlus.com

Entering zero as the test equipment address results in that model number being unavailable in the program (NA is displayed in the address field). To minimize possible confusion later, enter a zero for the address of each piece of test equipment that is not available.

Enter the address for each piece of test equipment that is available, including the spectrum analyzer under test. Addresses must contain the select code of the bus to which the equipment is connected followed by the equipment address on that bus. For example, if the 8902A is at address 14 on a bus with a select code of 7, enter an address of 714. If the 8902A were on a bus with a select code of 12, you should enter an address of 1214.

A question mark (?) next to a GPIB address indicates the address has not been checked to verify a response. An asterisk (*) next to a GPIB address indicates the address was checked and that an instrument responds at that address. If there is neither an asterisk nor a question mark next to an address, the address has been checked and no response was detected.

Storing and Loading the Conditions File

The information in the Conditions Menu may be stored for future use by pressing **Store Conds**. A file named CONDITIONS is created on the disk specified by the system mass storage file location.

NOTE

CONDITIONS files for software versions B.01.00 and earlier are not compatible with software versions C.00.00 and C.01.00. Versions C.00.00 and later CONDITIONS files include entries for the 83640A and 83650A sweepers and the 8487A power sensor.

CONDITIONS files for software versions C.01.00 and earlier are not compatible with software versions D.00.00 and later. Versions D.00.00 and later CONDITIONS files include entries for 5350 Series microwave frequency counters.

When running the Operation Verification program in the future, set the system mass storage file location to read the disk where the CONDITIONS file is located and press **Load Conds**. If the CONDITIONS file resides on the default system mass storage file location, the CONDITIONS file is loaded automatically the next time the program is run.

The default system mass storage file location is `:,700,1`. For the 9000 Model 236 (9836), it is necessary to use an external disk drive. The disk drive must support double-sided format.

ManualsPlus.com

Getting to the Test Menu

Once all necessary items in the Conditions Menu are selected, you can run a test by pressing **Test Menu**. Before the Test Menu is displayed, these things occur:

- Appropriate power sensor data files are loaded.
- GPIB is checked for a response at each address.
- Serial and model number of the spectrum analyzer under test are queried.
- Reference level calibration is performed.

NOTE Power sensor data files created using the `VERIFY_62` Operation Verification software (for 8560A/61A/61B/62A/62B/63A spectrum analyzers) are not compatible with the `VERIFY_6XE` Operation Verification software.

Refer to "Test Menu," on page 30, "Test Menu" in this chapter for more details on running the tests. If a printer is unavailable, the Conditions Menu is displayed again rather than the Test Menu. All test results must be sent to the printer.

NOTE Without a printer, Operation Verification tests do not run.

Verifying the GPIB

To see which test equipment responds on GPIB, press **Verify Bus**. This check only verifies that there is a response at the address listed; it cannot tell that a particular piece of equipment is at a particular address. This is useful for verifying GPIB connections without entering the Test Menu.

Querying the Spectrum Analyzer Serial Number

The Operation Verification program automatically queries the spectrum analyzer serial and model number on three occasions: at program initiation, when loading the CONDITIONS file, and when entering the Test Menu. To query the analyzer serial and model numbers at any other time, press **Query DUT S/N**. This is helpful for testing multiple spectrum analyzers; you do not have to reload the CONDITIONS file or restart the program.

Exiting Operation Verification

Press **Exit Program** to exit the Operation Verification program.

ManualsPlus.com

Dual-Bus Operation

The Operation Verification program may be used on dual GPIB systems, such as the microwave test set. In these systems, all the test equipment is connected to GPIB at select code 7, and the device under test (for example, the spectrum analyzer) is connected to GPIB at select code 8.

To run this program in a dual-bus configuration, enter equipment addresses as described in "Setting GPIB Addresses," on page 25, making sure that each address properly identifies the bus select code to which it is connected. Program operation is the same for dual-bus and single-bus configuration.

Sensor Utilities Menu

Operation Verification needs to know the cal factors of each power sensor being used. Create, edit, view, and delete data files containing cal factors for each power sensor in the Sensor Utilities Menu. Power sensor data filenames include the last five digits of the power sensor serial number. For example,

for 8481A power sensors the filename is SEN81NNNNN

for 8482A power sensors the filename is SEN82NNNNN

for 8485A power sensors the filename is SEN85NNNNN

for 8487A power sensors the filename is SEN87NNNNN

where NNNNN represents the last five digits of the power sensor serial number (the serial number suffix). Note that the first two digits in the filename correspond to the last two digits of the power sensor model number.

All power sensor data files available on the system mass storage location file are listed upon entering the Sensor Utilities Menu.

NOTE Power sensor data files created using the `VERIFY_62` Operation Verification software (for 8560A/61A/61B/62A/62B/63A Spectrum Analyzers) are not compatible with the `VERIFY_6XE` Operation Verification software.

ManualsPlus.com

Adding a Power Sensor Data File

To add a new power sensor data file, press **Add File**, and enter the power sensor model number as requested. An error message is displayed if a disk is not found at the current system mass storage file location.

When prompted for the power sensor serial number, enter only the last five digits (the serial number suffix). You are then prompted for a cal factor frequency and for the cal factor. These frequency/cal-factor pairs need not be entered in order of increasing frequency; the program inserts the pairs in their proper place. All frequencies should be entered in MHz.

A 50 MHz Cal-Factor must be entered in order to calibrate the power sensor. Some power sensors do not include a 50 MHz Cal-Factor on their chart or calibration record; it is listed as part of the Calibration Procedure on the case of the power sensor.

If a mistake is made entering a cal factor, enter the frequency of the erroneous cal factor at the next frequency prompt. Enter the correct cal factor at the next prompt. If an error was made entering the frequency value, enter the erroneous frequency at the next frequency prompt and a zero for the cal factor to delete that frequency point.

Once all cal factor data for a power sensor is entered, enter an S at the next frequency prompt. The power sensor data is then stored on disk.

Viewing and Editing a Power Sensor Data File

Press **View/Edit** to view or edit a power sensor data file. Only data files listed on the screen can be viewed or edited. If a file is created but data is not stored, the filename is listed, but no data is viewed and it cannot be edited.

To change the cal factor at a particular frequency, enter that frequency at the frequency prompt, then enter the new cal factor.

To delete a frequency/cal factor pair, enter the frequency of the pair to be deleted and a cal factor of zero. Add a frequency/cal factor pair by entering the new frequency at the frequency prompt and the new cal factor.

Deleting a File

Press **Delete File** to remove a listed file. At the prompt, enter the filename exactly as it appears on-screen. You are asked for confirmation to delete the file.

ManualsPlus.com

Changing the System Mass Storage File Location

To add, edit, or view power sensor data on a disk other than the one currently specified by the system mass storage file location, press **System File**. Enter the msus of the new system mass storage file location. All power sensor files residing on that disk are listed. Upon returning to the Conditions Menu, the system mass storage file location is the one determined in the Sensor Utilities Menu.

Listing Available Power Sensor Data Files

Press **List Files** to list all power sensor data files on the currently specified system mass storage location file.

Returning to the Conditions Menu

Press **Cond Menu** to return to the Conditions Menu.

Test Menu

The Test Menu displays all tests that can be performed by the Operation Verification program. Notice that the menu has two pages. Tests may be run in any of five modes. These are listed below.

- All Tests runs all 17 tests in the sequence shown on screen.
- Single Sequence runs a user-defined sequence of tests once.
- Single Test runs one test once.
- Repeat Sequence runs a user-defined sequence of tests until testing is aborted.
- Repeat Test runs a single test until the testing is aborted.

If GPIB controlled equipment for a given test does not respond over GPIB, that test is flagged `MISSING ETE` (missing electronic test equipment). These tests cannot be run and, if they are included as part of a sequence (All Tests, Single Sequence, or Repeat Sequence), they are ignored. See “List Equipment,” below.

If a test does not apply to the spectrum analyzer, the test will be flagged `TEST NOT APPLICABLE`. For example, if the spectrum analyzer is an E-Series instrument which does not have Option 007, the Fast Sweep Time Accuracy test will have the message `TEST NOT APPLICABLE` next to it.

Equipment connection prompts are displayed on the computer screen. Most tests check equipment connections and only prompt the operator if a misconnection is detected.

ManualsPlus.com

If more than one power meter (or the measuring receiver and one of the power meters) is present, the program asks which model to use as the power meter. Enter the model number without the alphabetic character (for example, enter 8902 for an 8902A). Similarly, if more than one frequency counter is present, the program asks which counter to use. Again, enter the model number without the alphabetic character.

The test currently being run and its test number are indicated in the screen title block of the spectrum analyzer under test.

All Tests

To run all 17 tests in the sequence shown, press **All Tests**. The pointer moves to each test as it is being run. All Tests can be run in approximately 60 minutes (75 minutes for an Agilent 8564E/EC or Agilent 8565E/EC).

Three softkeys are displayed when running All Tests. Press **ABORT TEST** to abort the current test and continue to the next test. Press **ABORT SEQUENCE** to abort the All Test mode. Pressing **Restart** aborts and restarts the current test. If the spectrum analyzer is in the middle of a sweep, no action is taken until the sweep is completed.

Single Sequence

Use this mode to perform a subset of the tests, to run a particular test a specified number of times, or to run all 16 tests in a sequence different from the All Tests sequence. After pressing **Single Sequence**, you are prompted for a test number. The sequence is displayed after each prompt. Up to 25 test numbers may be entered (test number duplication is permitted). Enter a zero to terminate building the sequence and begin testing.

If an error is made in entering the sequence, enter a zero at the next prompt, then press **ABORT SEQUENCE**. Now press **Single Sequence** to reenter the correct sequence.

The **ABORT TEST**, **ABORT SEQUENCE**, and **Restart** softkeys have the same function as in the All Test mode.

Single Test

Press **Single Test** to run the test indicated by the pointer. Once the test is running, press **Restart** to abort and restart the test.

ManualsPlus.com

Repeat Sequence

The Repeat Sequence mode performs a user-defined set of tests repeatedly until the sequence is aborted. For example, if the desired sequence is test numbers 6,7,8,6,7,8,6,7,8,..., press **Repeat Sequence** and enter the sequence of 6,7,8. When the last test of this sequence is completed, the sequence is repeated.

The **ABORT TEST**, **ABORT SEQUENCE**, and **Restart** softkeys have the same function as in the All Test mode.

Repeat Test

Use the Repeat Test mode to run a single test indefinitely. Move the pointer to the test to be repeated. Testing can be stopped by pressing **ABORT REPEAT**. Press **ABORT TEST** to abort and restart the test.

Calibrate Power Sensor

The Operation Verification program keeps track of which power sensor is being used and the elapsed time since it was last calibrated.

The program prompts the user to recalibrate the power sensor if more than 2 hours elapses since the last calibration. Also, if the power sensor is changed, the new power sensor must be calibrated.

If there is a significant change in ambient temperature, or improved power meter accuracy is desired, it is advisable to recalibrate the sensor more often than the program requires. Press **Cal Sensor** and follow the instructions on the computer screen to recalibrate the power sensor.

List Equipment

To obtain a list of required test equipment for running a test, move the pointer to the test, press **List Equip**. All GPIB controlled equipment and passive devices, other than required cables and adapters, are listed. If a test is flagged `MISSING ETE` but all test equipment appears present, press **List Equip** to see what is needed, then return to the Conditions Menu and verify that the equipment is present. Press **Cond Menu** to return to the Conditions Menu from the Test Menu.

ManualsPlus.com

Test Results

At the end of each test, a PASS, SHORT PASS, or MEASUREMENT IS OUT OF TOLERANCE message is printed on the test record and displayed next to the test on the computer screen.

PASS indicates that the test is fully completed and all measurements are within specification limits.

SHORT PASS indicates that the test was abbreviated, usually due to equipment limitations, but the measurements made were within specification limits. Not all tests can be abbreviated. The meaning of Short Pass varies between each test; refer to “Test Descriptions” in this section for more information.

NOTE A Short Pass is sufficient for passing Operation Verification alone. If Operation Verification is used as part of performance verification, all tests must yield a PASS result.

MEASUREMENT IS OUT OF TOLERANCE indicates that one or more of the measurements made during the test did not meet specification limits. If the data is shown in tabular form, the symbol <<<< is placed next to the out-of-tolerance data. In the event of a measurement-out-of-tolerance condition, it is recommended that any related manual performance test be performed to verify out-of-tolerance conditions. The related performance test for each operation verification test is listed at the beginning of each test description in this chapter.

NOTE Because test results are expected to change over a period of time, Agilent Technologies warrants only the specification range and not the repeatability of data for any given specification.

ManualsPlus.com

Operation Verification Menu Softkeys

This section provides a brief description of each menu of softkeys. More detailed information is provided in “Program Operation” in this chapter. The softkey order shown below may vary with what appears on the computer display; the order differs depending on whether an 9000 Series 200 or Series 300 computer is used.

Conditions Menu

Test Menu displays the Test Menu, which allows you to run tests once, repeatedly, or in a user-defined sequence. Refer to “Test Menu.”

Load Conds loads the CONDITIONS file from the disk specified by the system mass storage file location.

Sensor Utils displays the Sensor Utilities Menu, which allows viewing, editing, and adding power sensor data files. Refer to “Sensor Utilities Menu.”

Change Entry permits changing a Conditions Menu entry, indicated by the pointer along the left edge of the computer display. Press the **RETURN** or **ENTER** keys to terminate an entry.

Verify Bus checks each listed GPIB address for response. **Verify Bus** does not verify that a particular piece of equipment is at a specified address.

Query DUT S/N queries the GPIB for the serial number and model number of the spectrum analyzer under test.

Store Conds stores the current conditions in the CONDITIONS file on the specified system mass storage file location.

Exit Program exits the Operation Verification program.

ManualsPlus.com

Sensor Utilities Menu

View/Edit allows user to view and edit power sensor data files.

Add File creates a new power sensor data file.

Delete File deletes a power sensor data file. User is asked for confirmation before deletion takes place.

List Files lists all power sensor data files on the disk currently specified by the system mass storage file location.

System File allows user to change the currently specified system mass storage file location.

Cond Menu returns you to the Conditions Menu.

Test Menu

All Tests runs all 16 tests in the order listed by the program.

Single Sequence allows entry of a test sequence that is run once.

Single Test runs the test indicated by the pointer, once.

Repeat Sequence allows entry of a test sequence that runs repeatedly until you abort testing.

Repeat Test runs the test indicated by the pointer repeatedly until you abort the testing.

Cal Sensor allows you to recalibrate the current power sensor and resets the internal “time-since-last-calibration” timer.

List Equip lists the required equipment for the test indicated by the pointer.

Cond Menu returns to the Conditions Menu.

ManualsPlus.com

Test Descriptions

Each of the following test descriptions include the related specification, related performance test, and a test setup illustration used in Operation Verification. Operation Verification is designed to test a spectrum analyzer operating within a temperature range of 20 °C to 30 °C.

ManualsPlus.com

10 MHz Reference Accuracy

Related Specification

Frequency Reference Accuracy (Option 103)

Related Performance Test

2. 10 MHz Reference Output Accuracy (Option 103) in Chapter 10 of Volume II of the calibration guide.

Test Description

The frequency of the CAL OUTPUT of the spectrum analyzer is counted by the microwave frequency counter and is compared to the specification. Measuring the CAL OUTPUT signal yields higher resolution than measuring the 10 MHz reference directly. This test applies only to Option 103 spectrum analyzers (the temperature-compensated crystal oscillator option).

NOTE A Short Pass will be indicated if the analyzer is a non-Option 103 but passes the specification for Option 103.

Earlier revisions of the operation verification software measure the 10 MHz REF IN/OUT frequency directly.

Figure 1-1 **10 MHz Reference Accuracy Test Setup**

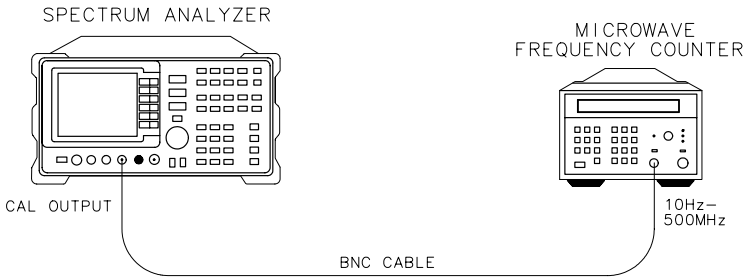

dp12e

ManualsPlus.com

1ST LO OUTPUT Amplitude Accuracy

Related Specification

1ST LO OUTPUT Amplitude

Related Performance Test

1ST LO OUTPUT Amplitude

Test Description

The 1ST LO OUTPUT power is measured with a power meter. For spectrum analyzers without Option 002 (Tracking Generator), the spectrum analyzer is placed in external mixing mode and harmonic-locked to N=6. This allows for the maximum tuning range of the 1ST LO. For spectrum analyzers with Option 002 (8560E/ECs only), internal mixing mode is used. This limits the lowest 1st LO frequency that can be set.

Figure 1-2 1ST LO OUTPUT Amplitude Accuracy Test Setup

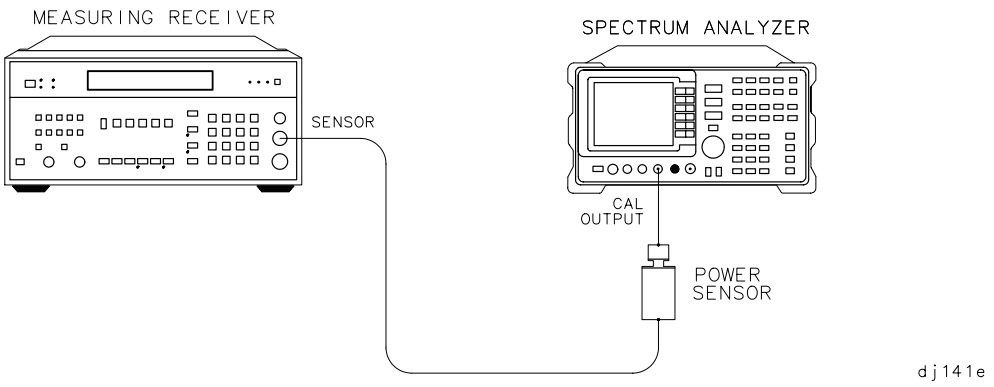

ManualsPlus.com

Calibrator Amplitude Accuracy

Related Specification

CAL OUTPUT Amplitude

Related Performance Test

Calibrator Amplitude and Frequency Accuracy

Test Description

The amplitude of the CAL OUTPUT signal is measured using a power sensor and either the measuring receiver or the power meter. The measured amplitude is compared to the specification.

Figure 1-3 Calibrator Amplitude Accuracy Test Setup

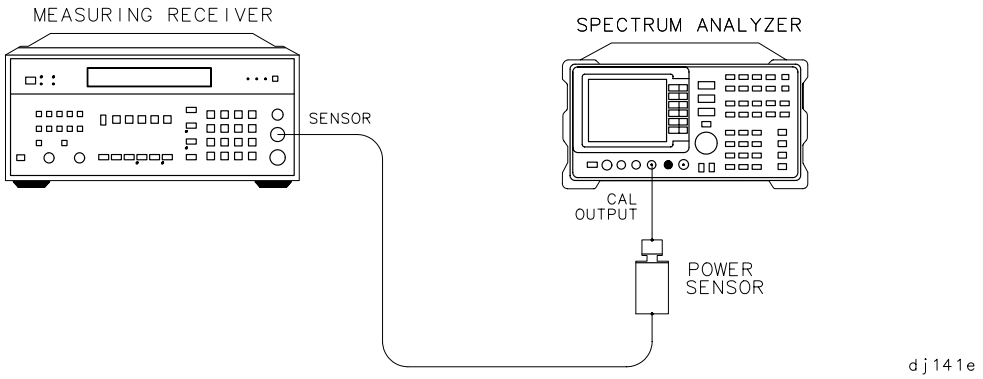

ManualsPlus.com

Displayed Average Noise Level

Related Specification

Displayed Average Noise Level

Related Performance Test

Displayed Average Noise Level

Test Description

The spectrum analyzer INPUT 50 Ω is terminated in 50 Ω. The resolution bandwidth, video bandwidth, and input attenuation are set according to the spectrum analyzer specifications. The displayed average noise level is measured at several points in each band and the results are compared with the specification.

Figure 1-4 Displayed Average Noise Level Test Setup

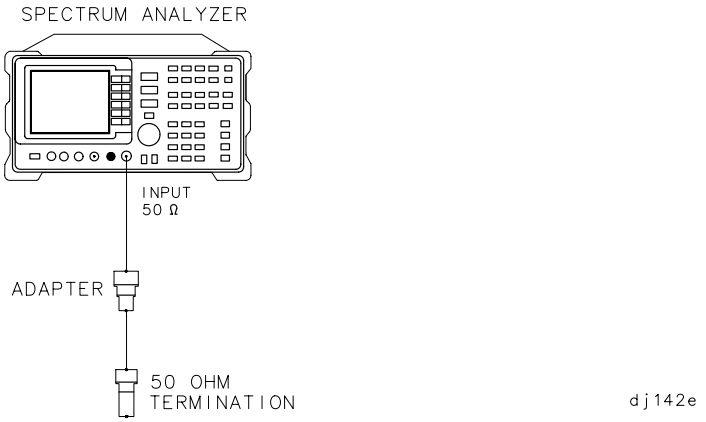

ManualsPlus.com

Fast Sweep Time Accuracy

Related Specification

Sweep Time Accuracy (all EC-Series instruments and E-Series instruments with Option 007)

Related Performance Test

Fast Sweep Time Accuracy (all EC-Series instruments and E-Series instruments with Option 007)

Test Description

The sweeptime accuracy for sweeptimes <30 ms, in EC-Series spectrum analyzers and E-Series spectrum analyzers with Option 007, is dependent on the 10 MHz frequency reference absolute accuracy. The test measures the 300 MHz CAL OUTPUT frequency since it is referenced to the 10 MHz reference. Measuring the CAL OUTPUT signal yields higher resolution than measuring the 10 MHz reference directly.

Figure 1-5 Fast Sweep Time Accuracy Test Setup

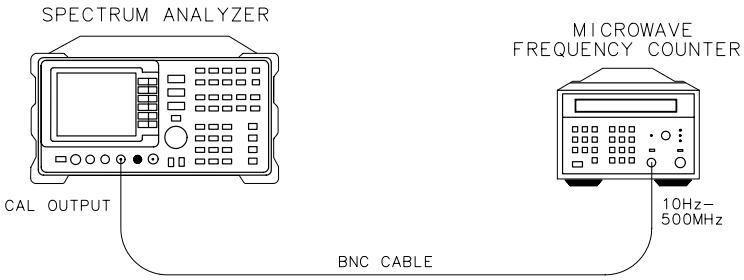

dp12e

ManualsPlus.com

Frequency Readout/Frequency Counter Accuracy

Related Specifications

Frequency Readout Accuracy Frequency Count Marker Accuracy

Related Performance Test

Frequency Readout Accuracy/ Frequency Count Marker Accuracy

Test Description

The frequency of the synthesized sweeper signal is measured using both the normal marker and the frequency count marker. Both the “frequency readout × frequency reference accuracy” and “marker frequency × frequency reference accuracy” terms of the specification are zero, since the spectrum analyzer provides the frequency reference for the synthesized sweeper. The marker frequencies are compared to the specification.

Figure 1-6 Frequency Readout/Counter Accuracy Test Setup

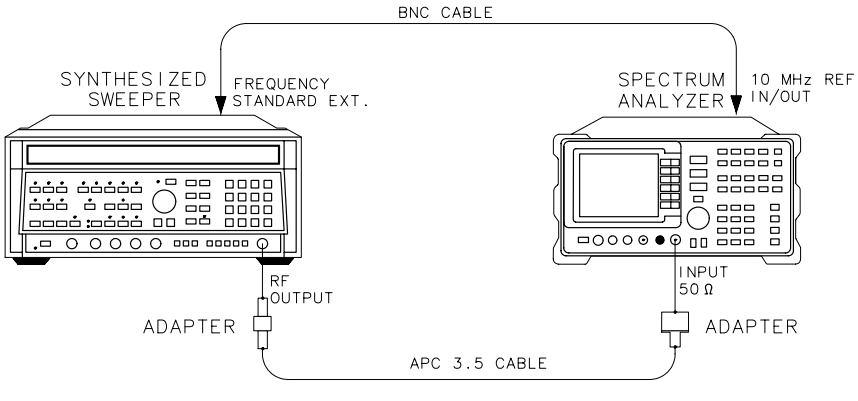

ManualsPlus.com

Frequency Response

Related Specification

Frequency Response

Related Performance Test

Frequency Response

Test Description

The spectrum analyzer frequency response is tested with two setups: the first, using the synthesizer/level generator, for frequencies between the spectrum analyzer minimum frequency and 50 MHz; and the second, using the synthesized sweeper and a measuring receiver or power meter, for frequencies above 50 MHz. If the synthesizer/level generator is not available, the frequency response above 50 MHz can still be tested. If the synthesizer/level generator is available, but you do not wish to perform the test below 50 MHz, enter a `Q` when prompted to connect the Agilent 3335A output to the spectrum analyzer input.

In both parts of this test, a signal of known amplitude is applied to the input of the spectrum analyzer and the analyzer marker amplitude is read. The frequency response relative to the calibrator frequency (300 MHz), within a given frequency band, is calculated and compared to specification. The band-switching uncertainty specification is verified by calculating the band-to-band frequency response. The band-to-band frequency response specification is equivalent to the sum of the in-band frequency response specifications of the two bands in question and the band-switching uncertainty specification.

While the >50 MHz part of the test is running, a graph of frequency response relative to the CAL OUTPUT signal will be plotted on the computer display. This graph will be dumped to the printer when the test has been completed. If one of the band-to-band frequency response entries is out-of-tolerance, the <<<< symbol will be placed to the right of the row where the out-of-tolerance condition was detected. It will not necessarily be placed directly to the right of the out-of-tolerance entry. Check each entry in that row against the specification (listed in parentheses) to find the entry that is out of tolerance. A Short Pass will occur if the >50 MHz part of the test is within specification but the <50 MHz part of the test was not performed.

ManualsPlus.com

Figure 1-7 Frequency Response Test Setup (<50 MHz)

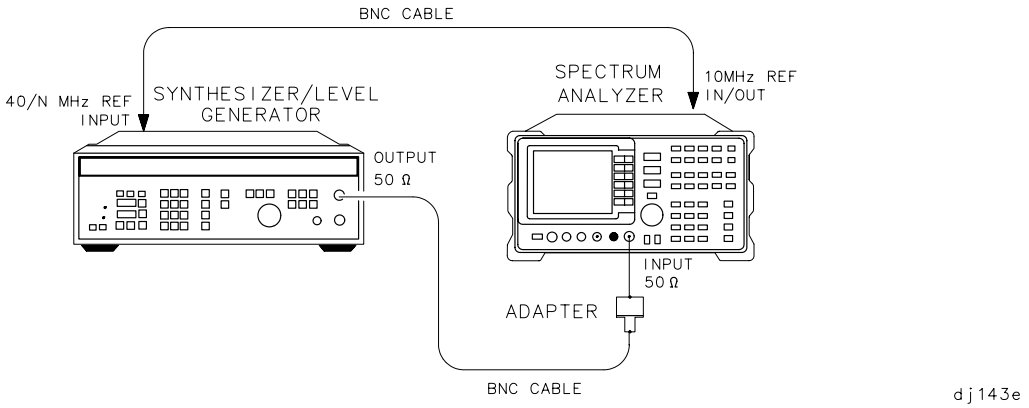

Figure 1-8 Frequency Response Test Setup (>50 MHz)

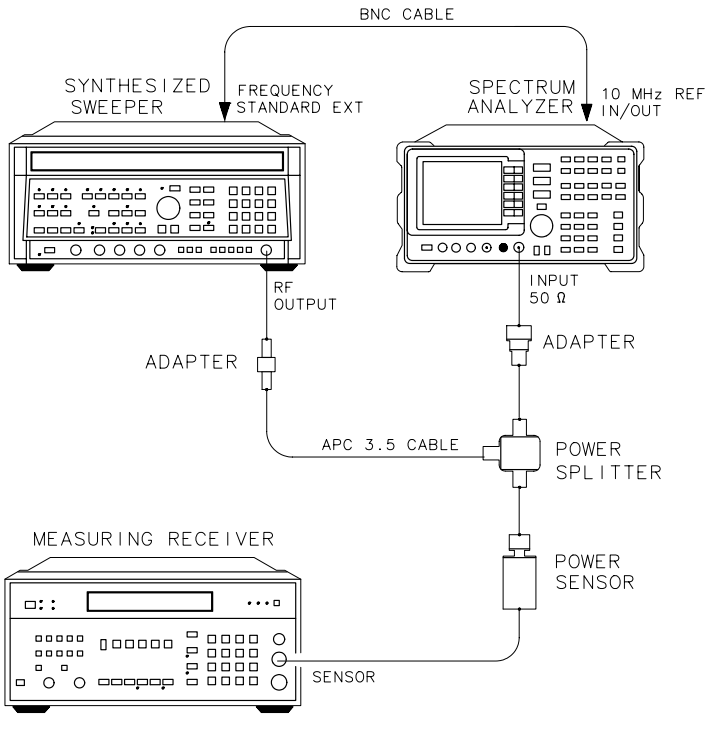

ManualsPlus.com

Frequency Span Accuracy

Related Specification

Frequency Span Accuracy

Related Performance Test

Frequency Span Accuracy

Test Description

Two sources provide two signals of precise frequency separation. One source is a synthesized sweeper, and the second source is the CAL OUTPUT signal. The frequency separation is measured using the spectrum analyzer delta-marker function and compared to the specification. The frequency reference for the synthesized sweeper is provided by the spectrum analyzer.

Figure 1-9 Frequency Span Accuracy Test Setup

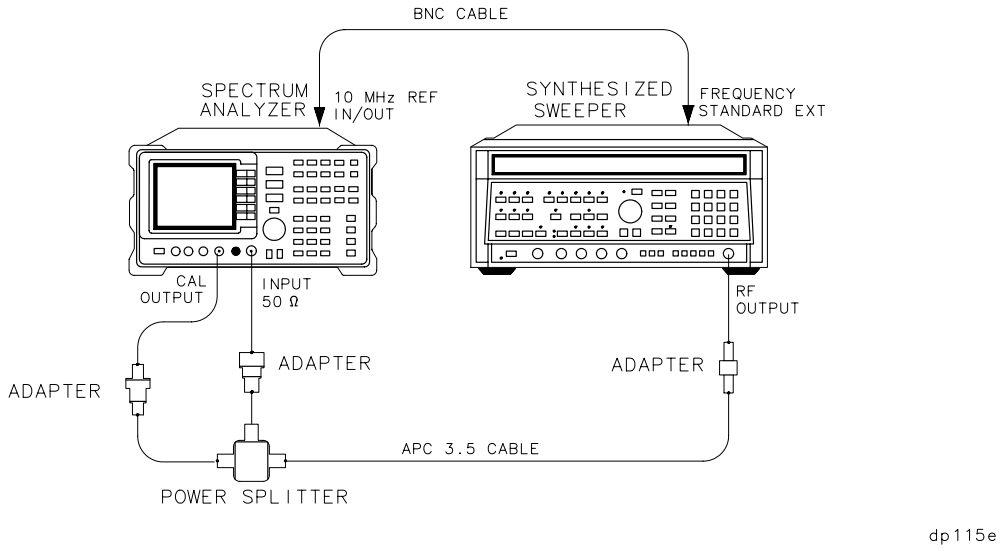

ManualsPlus.com

IF Gain Uncertainty

Related Specification

IF Gain Uncertainty

Related Performance Test

IF Gain Uncertainty

Test Description

A signal source of known amplitude is connected to the spectrum analyzer and an amplitude reference is set. The signal source amplitude is stepped down as the spectrum analyzer is stepped down, and the signal amplitude is measured at each point. The amplitude variation with respect to the reference is compared to the specification. The test is performed in 1 dB steps from 0 dBm to –12 dBm reference levels, and in 10 dB steps from 0 dBm to –80 dBm reference levels. The 10 dB steps are tested in both log and linear scale factors.

Figure 1-10 IF Gain Uncertainty Test Setup

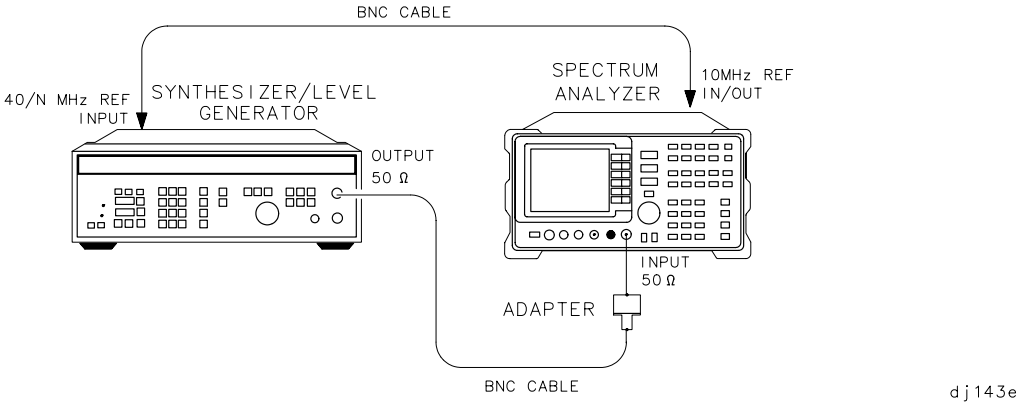

ManualsPlus.com

Image and Multiple Responses

Related Specifications

Image and Multiple Responses (8560E/EC) Image, Multiple, and Out-of-Band Responses (Agilent 8561E/EC,Agilent 8562E/EC, Agilent 8563E/EC, Agilent 8564E/EC, and Agilent 8565E/EC) Out-of-Range Responses (8560E/EC and Agilent 8561E/EC)

Related Performance Test

Image, Multiple, and Out-of-Range Responses (8560E/EC) Image, Multiple, Out-of-Band, and Out-of-Range Responses (Agilent 8561E/EC) Image, Multiple, and Out-of-Band Responses (Agilent 8562E/EC,Agilent 8563E/EC,Agilent 8564E/EC, and Agilent 8565E/EC)

Test Description

Image, multiple, out-of-band, and out-of-range responses are tested, as applicable, in each frequency band. A signal is applied to the signal analyzer input, then a reference amplitude measurement is made. The signal source is then tuned to a frequency that causes either an image, multiple, out-of-band, or out-of-range response. The amplitude displayed on the spectrum analyzer is measured and the difference between this measurement and the reference amplitude measurement is calculated.

Figure 1-11 Image, Multiple, Out-of-Band, and Out-of-Range Responses Test Setup

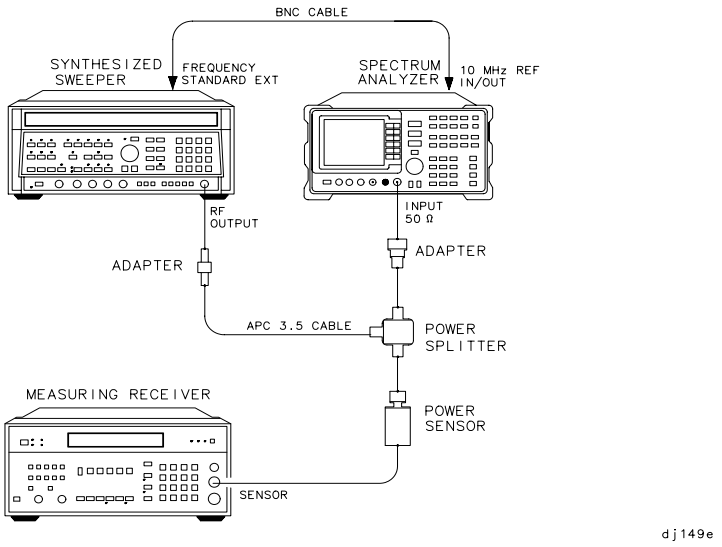

ManualsPlus.com

Input Attenuator Switching Uncertainty

Related Specification

Input Attenuator Switching Uncertainty

Related Performance Test

Input Attenuator Accuracy

Description

The output of theAgilent 3335A is applied to the input of the spectrum analyzer, and an amplitude reference is set. The spectrum analyzer IF gain uncertainty is characterized using the Agilent 3335A as the reference. The 3335A is then reset to a fixed amplitude and the input attenuator is stepped from 10 dB to 70 dB (10 to 60 dB for the Agilent 8564E/EC and Agilent 8565E/EC). At each step, the amplitude deviation from the reference is measured using the marker functions. The input attenuator accuracy is calculated from the marker value and the characterized IF gain uncertainty. The input attenuator accuracy then is compared to the specification.

Figure 1-12 Input Attenuator Accuracy Test Setup

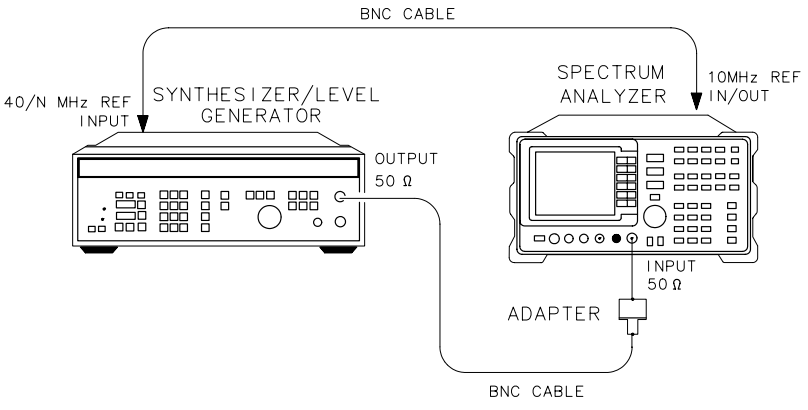

ManualsPlus.com

Noise Sidebands

Related Specification

Noise Sidebands

Related Performance Test

Noise Sidebands

Test Description

A clean signal source is applied to the input of the spectrum analyzer and the noise level at frequency offsets above and below the carrier are measured. These sideband levels are compared to the specification.

Noise sidebands measured at offsets of 1 kHz and less using the CAL OUTPUT signal will be up to 6 dB better than when measured using the synthesized signal generator. This difference is due to phase-coherency of the CAL OUTPUT signal and the internal local oscillators. Noise sidebands measured at offsets of 10 kHz and greater will be the same if the CAL OUTPUT signal or the synthesized signal generator is used (the signal generator frequency is set to 300 MHz).

NOTE Test results will be invalid if the source and the spectrum analyzer use the same frequency reference.

Figure 1-13 Noise Sidebands Test Setup

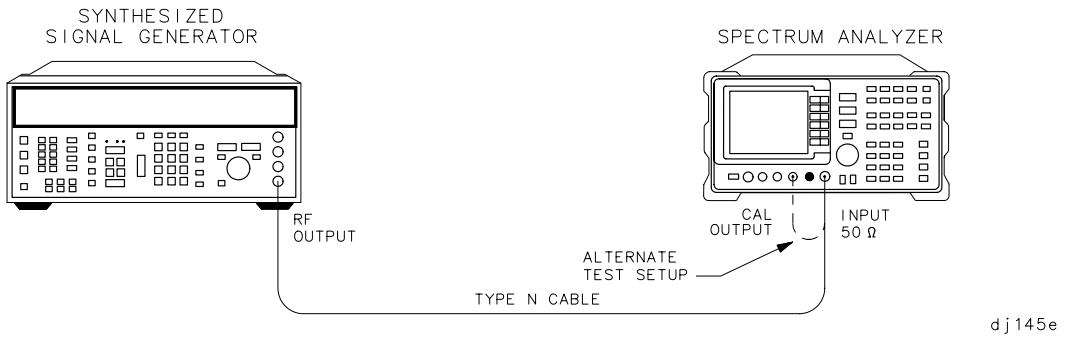

ManualsPlus.com

RES BW Accuracy and Selectivity

Related Specifications

Resolution Bandwidth Accuracy Resolution Bandwidth Selectivity

Related Performance Test

Resolution Bandwidth Accuracy and Selectivity

Description

The output of a synthesizer/level-generator is connected to the input of the spectrum analyzer. The spectrum analyzer is set to a span approximately twice the resolution bandwidth setting (for measuring the 3 dB bandwidth).

The synthesizer/level-generator output is then reduced in amplitude by 3 dB. A marker reference is set and the synthesizer/level-generator output is increased 3 dB to its previous level. A sweep is taken, then the markers are used to measure the 3 dB bandwidth.

The 60 dB bandwidths are measured in a similar manner, with the span set about 15 to 20 times the resolution bandwidth setting. The ratio between the 60 dB and 3 dB bandwidths are calculated and stored.

RES BW settings less than 300 Hz are not measured. These bandwidths are digitally derived; therefore, their accuracy and shape factors are guaranteed by design.

Figure 1-14 RES BW Accuracy and Selectivity Test Setup

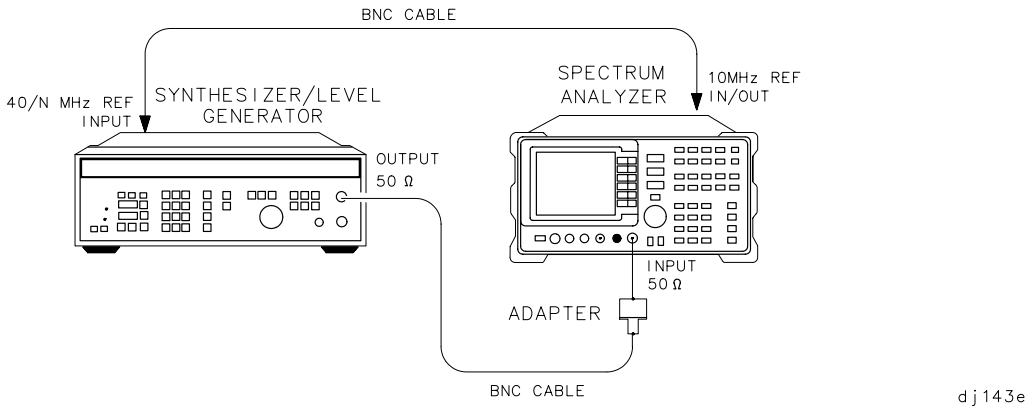

ManualsPlus.com

RES BW Switching and IF Alignment Uncertainty

Related Specifications

Resolution Bandwidth Switching Uncertainty IF Alignment Uncertainty

Related Performance Test

Resolution Bandwidth Switching and IF Alignment Uncertainty

Description

A signal is applied to the input of the spectrum analyzer and the signal amplitude is measured in each resolution bandwidth setting. The amplitude variation with respect to the 300 kHz resolution bandwidth is calculated and compared to the specifications.

Figure 1-15 RES BW Switching Uncertainty Test Setup

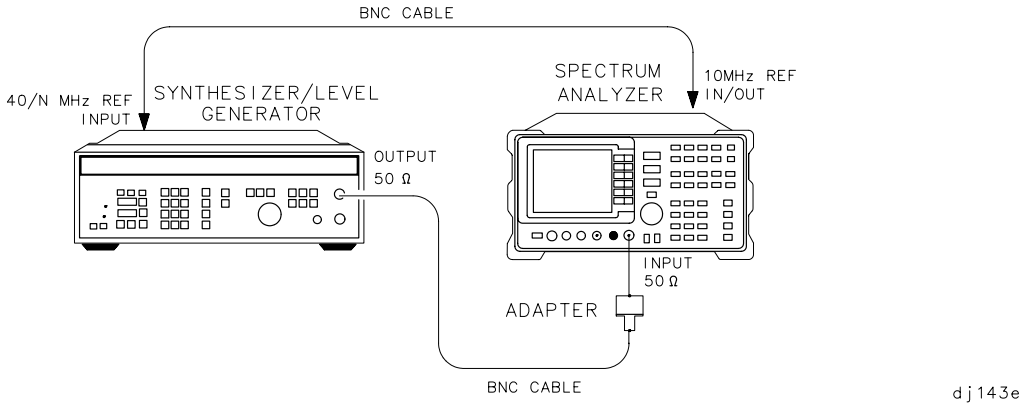

ManualsPlus.com

Residual FM

Related Specification

Residual FM

Related Performance Test

Residual FM

Test Description

A clean signal source is connected to the spectrum analyzer, and the analyzer resolution bandwidth is set to 300 Hz. The slope of the signal is measured for use in calculating the residual FM. The source is tuned to the middle of the slope just measured with the analyzer in zero span. The trace is read into the controller and a 10 Hz RES BW is simulated by executing a 50 ms moving average on the trace data. Only 20 ms worth of averaged data is examined to simulate the 20 ms measurement window.

Figure 1-16 Residual FM Test Setup

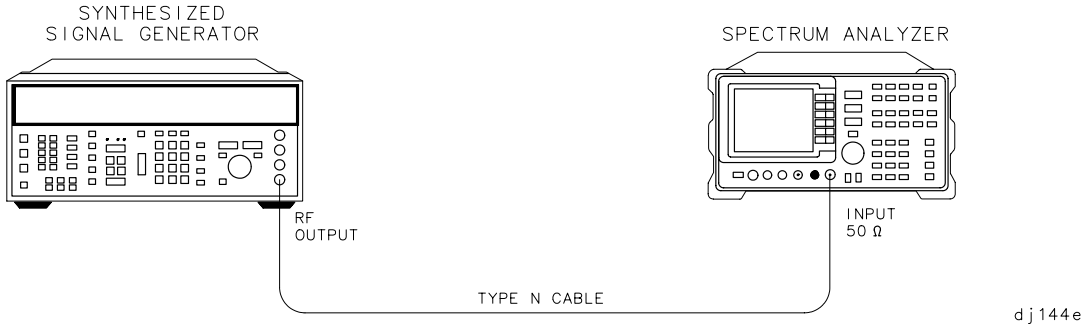

ManualsPlus.com

Scale Fidelity

Related Specification

Scale Fidelity

Related Performance Test

Scale Fidelity

Test Description

A signal source of known amplitude is connected to the spectrum analyzer and the source amplitude is adjusted for a top-screen reference. The source amplitude is stepped down and the displayed amplitude is measured at each step. The scale fidelity is tested in 2 dB steps in 2 dB/division and linear, and in 10 dB steps in 10 dB/division.

The amplitude variation with respect to the reference is measured and compared to the specification. In log mode, the amplitude difference between adjacent steps is calculated and compared to the specification.

Figure 1-17 Scale Fidelity Test Setup

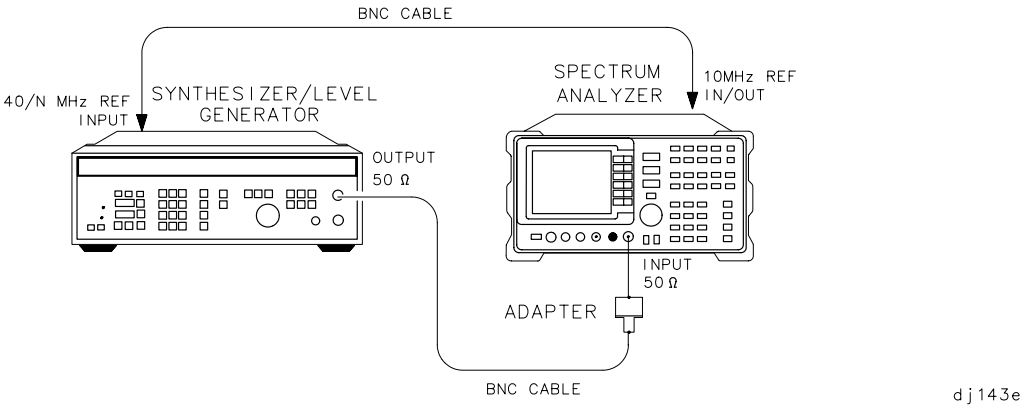

ManualsPlus.com

Second Harmonic Distortion

Related Specification

Second Harmonic Distortion

Related Performance Test

Second Harmonic Distortion

Test Description

This test consists of two parts: a low-band distortion test and a high-band distortion test. The high-band distortion test is only applicable to the Agilent 8561E/EC, Agilent 8562E/EC, Agilent 8563E/EC, Agilent 8564E/EC, and Agilent 8565E/EC. The low-band distortion test can be performed using either the frequency synthesizer or the synthesized sweeper. The high-band distortion test can only be performed using a synthesized sweeper. After the low-band distortion test has been completed, if a synthesized sweeper is available, the operator may choose whether or not to perform the high-band distortion test.

Before making the second harmonic distortion measurement, the filters are checked for sufficient rejection at the second harmonic. A warning message will be displayed if the filter has insufficient rejection. If the filter is acceptable, the test will proceed. The test is performed at 50 MHz for low band and at 2.95 GHz for high band (these are the fundamental frequencies).

Before checking the second harmonic distortion in high band, a frequency response check is made to reduce the measurement uncertainty due to the spectrum analyzer frequency response. Two filters are necessary for the high-band distortion test to ensure sufficient rejection at the second harmonic.

For an Agilent 8561E/EC, Agilent 8562E/EC,Agilent 8563E/EC, Agilent 8564E/EC, or Agilent 8565E/EC a Short Pass occurs if the low-band distortion test is within specification, and the high-band test is not performed. Agilent 8562E/EC, Agilent 8563E/EC, Agilent 8564E/EC, or Agilent 8565E/EC analyzers having software revisions D.00.00 and later will report a short pass even if both the low-band and high-band distortion tests are within specification. These analyzers specify distortion in three frequency ranges, but the software tests only two of these ranges.

ManualsPlus.com

Figure 1-18 Low-Band Second Harmonic Distortion Test Setup

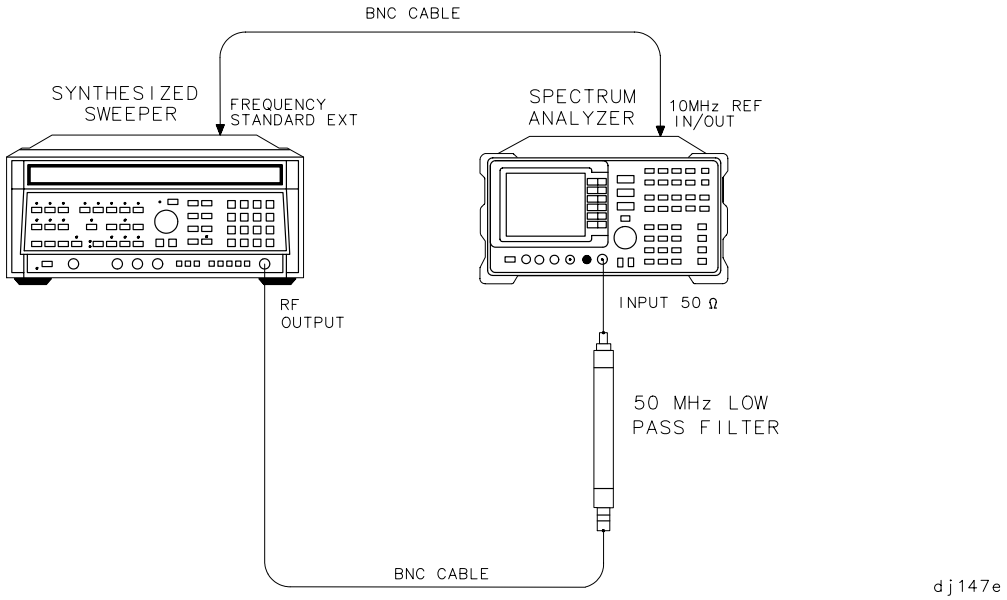

Figure 1-19 High-Band Second Harmonic Distortion Test Setup

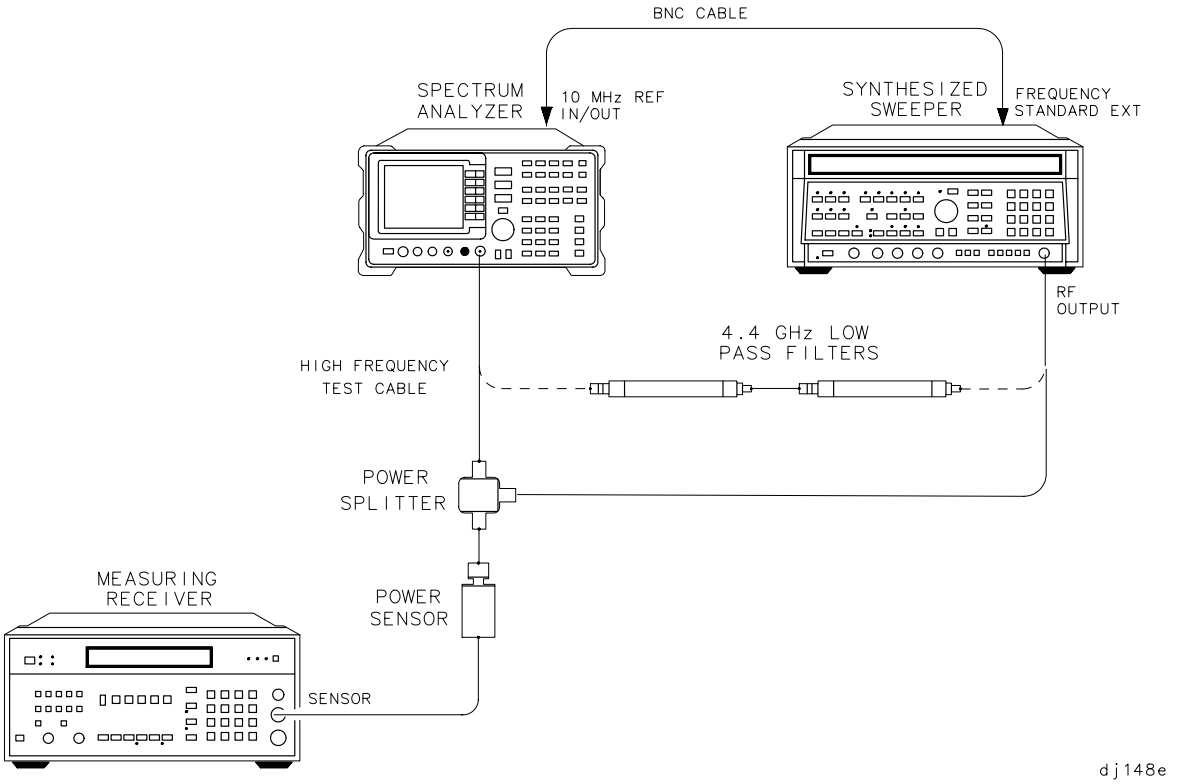

ManualsPlus.com

Operation Verification Error Messages

Operation Verification displays prompts and error messages on the computer display. Error messages are preceded with ERROR:. For more information on prompts, refer to “Program Operation” in this chapter.

The error messages listed below are in three groups: messages beginning with alphabetic characters, those beginning with numeric characters, and others beginning with variables such as filenames or instrument model numbers. If an error message is not found in either of the first two groups, it probably begins with a variable. Refer to the third group that begins with variables. The error message descriptions include recommended corrective action.

Error Messages Beginning with Alphabetic Characters

Address must be from 0 to 30 inclusive

GPIB addresses must be in the range from 0 to 30. Press any key and enter new address in this range.

Cal Factor outside of 0 to 150% range entered

Cal Factor entries must be within this range. Press any key and enter the frequency again. Then enter a Cal Factor in the proper range.

CONDITIONS file from system file location is not compatible! WARNING

CONDITIONS files from versions prior to C.00.00 did not include an entry for the 8487A power sensor. Similarly, CONDITIONS files from versions prior to D.00.00 did not include an entry for the 5350 Series microwave frequency counter. Default CONDITIONS data will be used. Modify the CONDITIONS data as necessary and press **STORE CONDS**.

Conditions Menu DUT ID disagrees with responding DUT ID

The model and/or serial number of the spectrum analyzer under test (DUT) listed in the “Conditions Menu,” on page 23, does not agree with that of the DUT which is responding over GPIB. Press any key and follow the instructions in the next three prompts.

ManualsPlus.com

Could not set calibrator signal to –10.00 or –10.17 dBm

While attempting the noise sidebands test using the CAL OUTPUT signal, the amplitude of the CAL OUTPUT signal could not be set to one of the values indicated. Check the CAL OUTPUT amplitude and the range of the reference level calibration adjustment.

Counter reads <frequency value> Hz. Check counter setup

The microwave frequency counter read a frequency far exceeding the specification of the 10 MHz reference. Check the test setup and press any key. The counter will read the frequency once more and assume that the value is correct.

Data not accepted, check entry format

The data just entered was not valid. Press any key and try again, checking for the proper entry format.

DUT doesn't respond at address listed

Program attempted to address the spectrum analyzer under test at the address listed, but the spectrum analyzer did not respond. Check the GPIB connections and the address listed.

File <filename> not found

The filename of the power sensor data file entered could not be found on the currently specified system mass storage file location. Check the filename and the system mass storage file location.

Insufficient equip. to do test <test number> : <test name>

The required GPIB-controlled test equipment for the test indicated is not available. Press any key and choose another test.

Low-pass filter(s) don't have at least <value> dB rejection

The low-pass filters are checked for rejection at the second harmonic in the Second Harmonic Distortion test. If insufficient rejection is detected, the part of the test using the tested filter cannot be run.

Maximum cal amplitude <–10 dBm

Program checked that CAL OUTPUT was connected to INPUT 50 Ω and found that the REF LVL CAL adjustment could not be set for a marker amplitude of ≥–10 dBm. Check CAL OUTPUT amplitude and REF LVL CAL adjustment range.

ManualsPlus.com

No GPIB address listed for DUT

Program attempted to address the spectrum analyzer (DUT), but no GPIB address was listed for it. Press any key and enter an address for the spectrum analyzer.

No more tests may be linked; enter 0 at next prompt

When entering a sequence of tests, the sequence string (including commas) cannot exceed 78 characters. Press any key and then a `0` at the next prompt. The testing sequence will begin.

Non-numeric entry other than S entered, or frequency <=0

When entering a frequency of a frequency/Cal-Factor pair to be added, edited, or deleted, the entry must either be a number greater than 0, or S to store the current data.

No sensor file found for <sensor model> S/N <sensor serial #>

A power sensor data file for the indicated power sensor could not be found on the currently specified system mass storage file location specifier. Check the sensor model and serial numbers and the system mass storage file location.

No 8662/63 reference oscillator. Check INT-EXT switches

No 10 MHz reference oscillator for the 8662A/63A was detected. Check the INTrnal/EXTernal frequency reference switches on its rear panel. The 8662A/63A should be using its internal reference oscillator.

Power meter reads <value> dBm

The power meter has read a value far exceeding the specification of the CAL OUTPUT amplitude; check that power sensor is connected to CAL OUTPUT and press any key. The power will be read once more and assumed to be valid.

Printer not available; cannot perform tests

All test results are sent to the printer. If a printer is not available, tests cannot be performed.

REF LVL CAL adjustment range <5 dB

In checking that the CAL OUTPUT was connected to INPUT 50 Ω, the REF LVL CAL adjustment was found to have insufficient range. Check REF LVL CAL range manually.

Select code <value> does not currently support GPIB

ManualsPlus.com

operations

The address just entered specified a select code which is not a GPIB interface. Check the address entered and the select code of the appropriate interface.

Sensor serial number must be from 1 to 99999

The power sensor serial number entered was not in the range indicated. Enter the serial number correctly.

System mass storage file location catalog cannot be read

Program attempted to read the catalog of the system mass storage file location. Check the msus of the system mass storage file location.

Test number must be between 0 and 17

Valid test numbers are in the range 0 and 17 for entering a sequence. Entering a `0` will terminate sequence entry and begin testing sequence. Press any key and enter a valid test number at the next prompt.

This program does not support the current DUT

The operation verification software supports only the 8560 E-Series and EC-Series. Refer to the Spectrum Analyzers section in Getting Started.

Unable to load CONDITIONS file from listed system file location

Program attempted to load the CONDITIONS file from the listed system mass storage file location. Check the msus of the System mass storage file location and the presence of the CONDITIONS file.

Unable to load data from <sensor filename>

Program found power sensor data file, but could not read the data from the file. Use the Sensor Utilities to delete the file and enter new data.

Unable to obtain catalog from <system mass storage file location>

The system could not verify that the system mass storage file location entered was available. Check the msus of the system mass storage file location.

Unable to reach power level of <value> dBm

Program was unable to set the source amplitude for a desired power meter reading. Check the test setup.

WARNING: CONDITIONS file from system file location is not

ManualsPlus.com

compatible!

CONDITIONS files from versions prior to C.00.00 did not include an entry for the 8487A power sensor. Similarly, CONDITIONS files from versions prior to D.00.00 did not include an entry for the 5350 Series microwave frequency counter. Default CONDITIONS data will be used. Modify the CONDITIONS data as necessary and press **STORE CONDS**.

Error Messages Beginning with Numeric Characters

8481A Sensor cal data minimum frequency not <= 50 MHz

Program requires the 8481A power sensor to have a Cal Factor at or below 50 MHz. Use Sensor Utilities to add a Cal Factor at or below 50 MHz.

8481A Sensor cal data maximum frequency not >= 300 MHz

Program requires the 8481A power sensor to have a Cal Factor at or above 300 MHz. Use Sensor Utilities to add a Cal Factor at or above 300 MHz.

8482A Sensor cal data minimum frequency not <= 50 MHz

Program requires the 8482A power sensor to have a Cal Factor at or below 50 MHz. Use Sensor Utilities to add a Cal Factor at or below 50 MHz.

8482A Sensor cal data maximum frequency not >= 300 MHz

Program requires the 8482A power sensor to have a Cal Factor at or above 300 MHz. Use Sensor Utilities to add a Cal Factor at or above 300 MHz.

8485A Sensor cal data minimum frequency not = 50 MHz

Program requires the 8485A power sensor to have a Cal Factor at 50 MHz. Use Sensor Utilities to add a Cal Factor at 50 MHz.

8485A Sensor cal data maximum frequency not >= 26.5 GHz

Program requires the 8485A power sensor to have a Cal Factor at or above 26.5 GHz. Use Sensor Utilities to add a Cal Factor at or above 26.5 GHz.

8487A Sensor cal data minimum frequency not = 50 MHz

Program requires the 8487A power sensor to have a Cal Factor at 50 MHz. Use Sensor Utilities to add a Cal Factor at 50 MHz.

ManualsPlus.com

8487A Sensor cal data maximum frequency not >= 50 GHz

Program requires the 8487A power sensor to have a Cal Factor at or above 50 GHz. Use Sensor Utilities to add a Cal Factor at or above 50 GHz.

8662/63 Error # <error number>

The 8662A/63A generated the error listed. Consult the 8662A or 8663A manual.

8662/63 Frequency reference out of tolerance

The 8662A/63A frequency reference is out of tolerance. Consult the 8662A or 8663A manual.

8662/63 Malfunction. Origin unknown

The 8662A/63A has detected a malfunction. Consult the 8662A or 8663A manual.

8662/63 Oven not yet warmed up

The 8662A/63A 10 MHz oven oscillator is cold. Allow the oven to warm up.

8662/63 Should be on INTernal reference

The 8662A/63A is in EXTernal frequency reference mode. Set the 8662A/63A to INTernal frequency reference.

Error Messages Beginning with Variables

<filename> file not found

The file indicated could not be found at the listed system mass storage file location. Check the filename and the system mass storage file location.

<keyboard entry> is a non-numeric entry

The program expected a numeric entry but did not receive one. Enter a numeric entry.

<number of instruments> instruments have GPIB addresses of <GPIB address>

The indicated number of instruments have all been set to the same GPIB address. Review the addresses and eliminate the duplication.

ManualsPlus.com

<power meter model number> doesn't read signal to be in –1 +/–5 dBm range

The power meter (or measuring receiver) does not read a power level within the range indicated. Check for loose connections.

<source model number> signal not in +5 +/–5 dBm range

The source indicated was set for +5 dBm output, but the spectrum analyzer measured the amplitude to be outside the ±5 dB range. Check test setup.

<source model number> signal not in –1 +/–5 dBm range

The source indicated was set for + 5 dBm output and the source output is fed through a power splitter to the spectrum analyzer under test. The spectrum analyzer should measure the amplitude to be within 5 dB of –1 dBm (6 dB loss through power splitter). Check test setup.

<source model number> +10 dBm signal not in +10 +/–8 dBm range

The source indicated was set for a +10 dBm output and the source output is fed through a low-pass filter(s) to the spectrum analyzer under test. The spectrum analyzer should measure the amplitude to be within 8 dB of +10 dBm (the filters have some insertion loss). Check test setup.

<source model number> has a cold oven

The 10 MHz reference oven oscillator has not warmed up yet. Allow the oven to warm up.

<source model number> is unlevelled

The source indicated has been programmed for an amplitude which results in an unlevelled condition. Check the test setup for loose connections.

ManualsPlus.com

2 8560E/EC Specifications and Characteristics

ManualsPlus.com

Specifications and Characteristics

The following tables list the spectrum analyzer specifications. Unless stated otherwise, all specifications describe the analyzer warranted performance under the following conditions:

- Five-minute warmup in ambient conditions
- Auto-coupled controls
- Digital trace display
- IF ADJ ON
- REF LVL CAL adjusted
- 1ST LO OUTPUT terminated in 50 ohms
- 2ND IF OUTPUT (Option 001 analyzers) terminated in 50 ohms
- Two-year calibration cycle
- Environmental requirements met

NOTE REF LVL CAL uses the CAL OUTPUT signal to calibrate the reference level. Internal temperature changes determine how often this adjustment should be performed. Amplitude temperature drift is a nominal 1 dB/10 °C. The nominal temperature variation within the instrument is 10 °C, most of which occurs during the first 30 minutes after power-on. Internal temperature equilibrium is reached after 2 hours of operation at a stable ambient temperature.

Characteristics provide useful information in the form of typical, nominal, or approximate values for analyzer performance. Tables of spectrum analyzer characteristics follow the specifications.

Calibration Cycle

The performance tests in Chapter 2 should be used to check the analyzer against its specifications every two years. Specifications are listed in this chapter.

The frequency reference must be adjusted and checked at the same time. Refer to the “10 MHz Frequency Reference Adjustment” in the *8560E and 8560EC Spectrum Analyzer Service Guide*.

ManualsPlus.com

Frequency Specifications

Frequency Range			
Internal Mixing			
AC Coupled	100 kHz to 2.9 GHz		
DC Coupled	30 Hz to 2.9 GHz		
External Mixing	18 GHz to 325 GHz		
Non-Option 002 and Non-Option 327			
External Mixing Bands			
Frequency Band	**Frequency Range**	**Harmonic Mixing Mode (N*)**	
		Preselected	**Unpreselected**
K	18.0 to 26.5	n/a	6–
A	26.5 to 40.0	8+	8–
Q	33.0 to 50.0	10+	10–
U	40.0 to 60.0	10+	10–
V	50.0 to 75.0	14+	14–
E	60.0 to 90.0	n/a	16–
W	75.0 to 110.0	18+	18–
F	90.0 to 140.0	n/a	24–
D	110.0 to 170.0	n/a	30–
G	140.0 to 220.0	n/a	36–
Y	170.0 to 260.0	n/a	44–
J	220.0 to 325.0	n/a	54–

* N is the harmonic mixing mode. For negative mixing modes (as indicated by the "–"), the desired 1st LO harmonic is higher than the tuned frequency by the 1st IF (3.9107 GHz for the 30 Hz to 2.9 GHz band, 310.7 MHz for all other bands). For positive mixing modes, the desired 1st LO harmonic is lower than the tuned frequency by 310.7 MHz.

ManualsPlus.com

Frequency Readout Accuracy	
Accuracy of START, CENTER, STOP or MARKER frequency	
SPAN > 2 MHz × N*	<±(frequency readout × frequency reference accuracy† + 5% of frequency span + 15% of resolution bandwidth + 10 Hz)
SPAN ≤ 2 MHz × N*	<±(frequency readout × frequency reference accuracy† + 1% of frequency span + 15% of resolution bandwidth + 10 Hz)

* N is the harmonic mixing mode.

† frequency reference accuracy = (aging × period of time since adjustment) + initial achievable accuracy + temperature stability.

Frequency Count Marker	
Frequency Count Marker Resolution	Selectable from 1 Hz to 1 MHz
Frequency Count Marker Accuracy (for signal-to-noise ratio ≥25 dB)	<±(marker frequency × frequency reference accuracy‡ + 2 Hz × N† + 1 LSD)
Delta Frequency Count Accuracy (for signal-to-noise ratio ≥25 dB)	<±(delta frequency × frequency reference accuracy‡ + 4 Hz × N† + 2 LSD)

† N is the harmonic mixing mode.

‡ Frequency Reference Accuracy = (aging × period of time since adjustment + initial achievable accuracy + temperature stability).

Frequency Reference Accuracy	
Non-Option 103	
Aging	<±0.5 × 10^{-9}/day (after 7 day warmup)
	<±1 × 10^{-7}/year
Temperature Stability	<±1 × 10^{-8}, –10 °C to +55 °C, referenced to 25 °C
Option 103	
Aging	<±2 × 10^{-6}/year
Settability	<±1 × 10^{-6}
Temperature Stability	<±1 × 10^{-6}, –10 °C to +55 °C, referenced to 25 °C

ManualsPlus.com

Stability		
Residual FM		
(zero span, 10 Hz RES BW)		
Non-Option 103	< 1.0 Hz × N* peak-to-peak in 20 ms†	
Option 103	< 10 Hz × N* peak-to-peak in 20 ms	
Noise Sidebands		
For Frequencies ≤1 GHz		
(Refer to the characteristics section for frequencies > 2.9 GHz)		
Offset	**Non-Option 103**	**Option 103**
100 Hz		
serial number prefix <3424A	<–80 dBc/Hz‡	<–70 dBc/Hz‡
serial number prefix ≥3424A	<–88 dBc/Hz‡	<–70 dBc/Hz‡
1 kHz	<–97 dBc/Hz‡	<–90 dBc/Hz‡
10 kHz††	<–113 dBc/Hz§	<–113 dBc/Hz§
30 kHz††	<–113 dBc/Hz#	<–113 dBc/Hz#
100 kHz‡‡		
serial number prefix <3424A	<–113 dBc/Hz§	<–113 dBc/Hz§
serial number prefix ≥3424A	<–117 dBc/Hz**	<–117 dBc/Hz**

* N is the harmonic mixing mode.

† See Resolution Bandwidth Usability in “Frequency Characteristics” for further information.

‡ Add 5.2 dB × (f/1 GHz) –1) for f > 1 GHz and f ≤ 2.9 GHz.

§ Add 2.5 dB × (f/1 GHz) –1) for f > 1 GHz and f ≤ 2.9 GHz.

#Add 3.0 dB × (f/1 GHz) –1) for f > 1 GHz and f ≤ 2.9 GHz.

**Add 2.0 dB for frequencies > 1 GHz and ≤ 2.9 GHz

†† For resolution bandwidth ≤ 1 kHz or frequency span ≤ 745 kHz.

‡‡ For resolution bandwidth ≥ 3 kHz or frequency span > 745 kHz.

ManualsPlus.com

Frequency Span	
Range	
Internal Mixing	0 Hz, 100 Hz to 2.9 GHz over the 10-division display horizontal axis, variable in approximately 1% increments, or in a 1, 2, 5 sequence.
External Mixing†	Minimum span = 100 Hz × N*
Accuracy	
SPAN > 2 MHz × N*	<±5%
SPAN ≤ 2 MHz × N*	<±1%

* N is the harmonic mixing mode.

† Resolution bandwidths ≤100 Hz are not available in external mixing. External mixing is not available for Option 002 or Option 327.

ManualsPlus.com

Resolution Bandwidths (–3 dB)	
Range*	
Non-Option 103	1 Hz to 1 MHz (selectable in a 1, 3, 10 sequence) and 2 MHz (3 MHz at –6 dB)
Option 103	10 Hz to 1 MHz (selectable in a 1, 3, 10 sequence) and 2 MHz (3 MHz at –6 dB)
Accuracy	
1 Hz to 300 kHz RES BW	<±10%
1 MHz RES BW	<±25%
2 MHz RES BW	<+50%, –25%
Selectivity (60 dB/3 dB bandwidth ratio)	
RES BW ≥300 Hz	<15:1
RES BW ≤100 Hz	<5:1
Bandwidth Shape	
1 and 2 MHz RES BW	Approximately Gaussian
300 Hz to 300 kHz RES BW	Synchronously tuned, 4-pole filters
1 Hz to 100 Hz RES BW	Digital, approximately Gaussian
* Resolution bandwidths ≤100 Hz are not available in external mixing.	

Video Bandwidth	
(Post-detection low-pass filter averages displayed noise for a smooth trace.)*	
Range	1 Hz to 3 MHz† in a 1, 3, 10 sequence
* Video bandwidth filtering is not available in resolution bandwidths ≤ 100 Hz when SPAN 0 Hz with firmware revisions 930809 and earlier. † The video bandwidth upper limit is 450 kHz in sample detection mode.	

ManualsPlus.com

Sweep

Sweep Time	
Range	
Span = 0	
Non-Option 007 (E-Series)	
Analog display	50 µs to <30 ms
Digital display	30 ms to 6,000 s*
Option 007 E-Series and all EC-Series instruments	
Digital display	50 µs to 6,000 s
Span ≥ 100 Hz	
RES BW ≥300 Hz	50 ms to 2,000 s†
RES BW ≤100 Hz	50 ms to 100,000 s (span-dependent)
Accuracy (Span = 0 Hz)	
Non-Option 007 (E-Series)	
Sweep time 30 ms to 6,000 s*	<±1%
Sweep time <30 ms	<±10%
Option 007 E-Series and all EC-Series instruments	
Sweep time 30 ms to 6,000 s*	<±1%
Sweep time <30 ms	<±0.1%
Sweep Trigger	Delayed, Free Run, Single, Line, External, or Video#

* 30 ms to 100 s for analyzers with serial prefix <3310A.

† 50 ms to 100 s for analyzers with serial prefix <3424A.

Video trigger is not available in RES BW settings ≤100 Hz.

ManualsPlus.com

Delayed Sweep	
Trigger Modes	Free Run, Line, External, Video*
Range	
Span = 0	
Non-Option 007 (E-Series)	+2 µs to +65.535 ms
Option 007 E-Series and all EC-Series instruments	
Sweep time ≥ 30 ms	+2 µs to +65.535 ms
Sweep time < 30 ms	–9.9 ms to +65.535 ms[††]
Span ≥ 100 Hz	+2 µs to +65.535 ms
Resolution	1 µs
Accuracy[#]	
Serial prefix 3310A and above	±1 µs
Serial prefix <3310A	
20 °C to 30 °C	±(1 µs + (0.05% × DELAY SWEEP setting)
–10 °C to +55 °C	±(1 µs + (0.12% × DELAY SWEEP setting)

* Video trigger is not available in RES BW settings ≤ 100 Hz.

[††] Negative delayed sweep (pre-trigger) is also limited to 50 × sweep time.

[#] In E-Series instruments without Option 007, the delay time will be subject to up to ±0.5 µs of jitter due to synchronization of the input edge trigger to the internal 1 MHz timebase. In E-series instruments with Option 007 and in EC-instruments using sweeptimes <30 ms, the delay time will experience up to ±83 ns of jitter due to synchronization of the input edge trigger to the internal 12 MHz timebase.

ManualsPlus.com

Time-Gated Spectrum Analysis

Gate Delay*	**Edge Mode**	**Level Mode**
Range	3 µs to 65.535 ms	≤0.5 µs
Resolution	1 µs	
Accuracy†		
Serial prefix 3310A and above	<±1 µs	
Serial prefix <3310A		
20 °C to 30 °C	± (1 µs + (0.05% × GATE DELAY setting)	
–10 °C to 55 °C	± (1 µs + (0.12% × GATE DELAY setting)	

* Time from GATE TRIGGER INPUT to positive edge of GATE OUTPUT.

† The gate delay time will experience up to ±0.5 µs of jitter due to synchronization of the input edge trigger to the internal 1 MHz timebase.

Gate Length*	
Range	1 µs to 65.535 ms
Resolution	1 µs
Accuracy	
Serial prefix 3310A and above	<±1 µs
Serial prefix <3310A	
20 °C to 30 °C	± (0.2 µs + (0.05% × GATE LENGTH setting)
–10 °C to 55 °C	± (0.2 µs + (0.12% × GATE LENGTH setting)

* Time from positive edge to negative edge of GATE OUTPUT.

Marker Frequency Resolution	SPAN/600 to a minimum of 1 Hz

Marker Time Resolution	Sweep time/600

ManualsPlus.com

Amplitude Specifications

Measurement Range

Maximum Safe Input Power	
Average Continuous Power (input attenuation ≥10 dB)	+30 dBm (1 W)
Peak Pulse Power (input attenuation ≥30 dB)	+50 dBm (100 W) for pulse widths ≤10 µs and <1% duty cycle.
DC Voltage	
AC Coupled	<±50 V
DC Coupled	<±0.2 V

Gain Compression	
10 MHz to 2.9 GHz (≤–5 dBm at input mixer‡)	<1.0 dB

‡ Mixer level = input level – input attenuation.

ManualsPlus.com

Displayed Average Noise Level With no signal at input, 1 Hz video bandwidth, and 0 dB input attenuation, tracking generator off.		
Frequency Range	**10 Hz RES BW** *(Option 103)*	**1 Hz RES BW** *(Non-Option 103)*
30 Hz	<–80 dBm	<–90 dBm
100 Hz	<–80 dBm	<–90 dBm
1 kHz	<–95 dBm	<–105 dBm
10 kHz	<–110 dBm	<–120 dBm
100 kHz	<–110 dBm	<–120 dBm
1 MHz to 10 MHz	<–130 dBm	<–140 dBm
10 MHz to 2.9 GHz		
serial number prefix <3632A	<–135 dBm	<–145 dBm
serial number prefix ≥3632A	<–141 dBm	<–151 dBm
Option H13	<–141 dBm	<–151 dBm

ManualsPlus.com

Spurious Responses		
All input-related spurious responses, except as noted below.	**Mixer Level***	**Distortion**
10 MHz to 2.9 GHz	–40 dBm	<–75 dBc
Second Harmonic Distortion		
(–40 dBm mixer level*)		
Applied Signal Frequency Range		
1 MHz to 1.45 GHz (serial number prefix <3632A)	–40 dBm	<–72 dBc
20 MHz to 1.45 GHz (serial number prefix ≥3632A)	–40 dBm	<–79 dBc
20 MHz to 1.45 GHz (Option H13)	–40 dBm	<–79 dBc
Third Order Intermodulation Distortion		
(with two signals at input mixer, spaced ≥1 kHz apart)		
Frequency Range		
1 MHz to 2.9 GHz (serial number prefix <3632A)	–30 dBm each	<–78 dBc
20 MHz to 2.9 GHz (serial number prefix ≥3632A)	–30 dBm each	<–82 dBc
20 MHz to 2.9 GHz (Option H13)	–30 dBm each	<–82 dBc
Image and Multiple Responses		
Frequency Range		
10 MHz to 2.9 GHz	–10 dBm	<–80 dBc
Out of Range Responses		
(for input signals 2.9 GHz to 12 GHz)		
Frequency Range		
10 MHz to 2.9 GHz	–10 dBm	<–80 dBc
* Mixer Level = input level – input attenuation		

Residual Responses	
>200 kHz with no signal at input, 0 dB input attenuation, N† 1	<–90 dBm
† N harmonic mixing number	

ManualsPlus.com

Display Range

Amplitude Scale	10 vertical display divisions, with the reference level (0 dB) at the top graticule line.

Calibration	
LOG	10 dB/DIV for 100 dB display from reference level.*
	5 dB/DIV for 50 dB display expanded from reference level.†
	2 dB/DIV for 20 dB display expanded from reference level.
	1 dB/DIV for 10 dB display expanded from reference level.†
LINEAR	10% of reference level per division over the top nine divisions
	(all 10 divisions for RES BW ≤100 Hz) when calibrated in voltage.

* 10 dB/DIV for 70 dB display from reference level for RES BW ≤100 Hz when SPAN = 0 Hz.

† In E-Series instruments these scales are not available for sweep times < 30 ms without Option 007.

Accuracy

Reference Level Range	
LOG, adjustable in 0.1 dB steps	–120 dBm to +30 dBm
LINEAR, settable in 1% steps	2.2 µV to 7.07 V

ManualsPlus.com

Reference Level Uncertainty

Frequency Response		
(with 10 dB input attenuation)		**Typical**
Relative (referenced to midpoint between highest and lowest peak excursions)		(20 °C to 30 °C)
DC Coupled, 30 Hz to 2.9 GHz	<±1.0 dB	<±0.8 dB
DC Coupled, 100 MHz to 2.9 GHz (serial number prefix ≥3632A)	<±0.7 dB	<±0.7 dB
AC Coupled, 100 kHz to 2.9 GHz	<±1.4 dB	<±0.9 dB
Absolute (referenced to 300 MHz CAL OUTPUT)		
DC Coupled, 30 Hz to 2.9 GHz	<±1.5 dB	<±1.0 dB
AC Coupled, 100 kHz to 2.9 GHz	<±1.7 dB	<±1.1 dB

Calibrator Uncertainty	
–10 dBm, 300 MHz	<±0.3 dB

Input Attenuator Switching Uncertainty	
(20 to 70 dB settings, referenced to 10 dB input attenuation)	
30 Hz to 2.9 GHz	<±0.6 dB/10 dB step, 1.8 dB max.

IF Gain Uncertainty	
(0 dBm to –80 dBm reference levels with 10 dB input attenuation)	<±1.0 dB

Resolution Bandwidth Switching Uncertainty	
(Referenced to 300 kHz resolution bandwidth at the reference level.)*	<±0.5 dB

* Scale fidelity is not the same for RES BW ≤100 Hz as for RES BW ≥300 Hz. Therefore, signals not at the reference level will experience an additional amplitude difference when switching between these two sets of RES BW settings, due to differences in scale fidelity.

ManualsPlus.com

Pulse Digitization Uncertainty	
(Pulse response mode, PRF >720/sweep time)	
LOG	
Resolution Bandwidth ≤ 1 MHz	<1.25 dB peak-to-peak
Resolution Bandwidth = 2 MHz	<3 dB peak-to-peak
LINEAR	
Resolution Bandwidth ≤ 1 MHz	<4% of reference level peak-to-peak
Resolution Bandwidth = 2 MHz	<12% of reference level peak-to-peak

IF Alignment Uncertainty	
(additional uncertainty when using 300 Hz RES BW only)	<±0.5 dB

ManualsPlus.com

Scale Fidelity*	
LOG	
Incremental	
0 to –90 dB range†	
RES BW ≥ 300 Hz	<±0.1 dB/dB
RES BW ≤ 100 Hz	<±0.2 dB/2 dB
Cumulative	
0 to –90 dB range†	
RES BW ≥ 300 Hz	<±0.1 dB/dB from the reference level to a maximum of ±0.85 dB
RES BW ≤ 100 Hz	<±0.2 dB/2 dB from the reference level to a maximum of ±0.85 dB
0 to –100 dB range†	
RES BW ≥ 300 Hz	±2.5 dB *characteristic*
RES BW ≤ 100 Hz	maximum of ±1.5 dB
LINEAR	<±3% of reference level

* Scale fidelity is not the same for RES BW ≤100 Hz as for RES BW ≥ 300 Hz. Therefore, signals not at the reference level will experience an additional amplitude difference when switching between these two sets of RES BW settings due to the differences in scale fidelity.

† 0 to –70 dB range for RES BW ≤100 Hz when SPAN = 0 Hz.

Marker Amplitude Resolution*		
	(Sweep time ≥ 30 ms)	
Scale:	LOG 10 dB/DIV	(1/6) dB
	LOG 5 dB/DIV	(1/12) dB
	LOG 2 dB/DIV	(1/30) dB
	LOG 1 dB/DIV	(1/60) dB
	LINEAR	Reference Level/600

* In E-Series instruments markers are not available for sweep times < 30 ms with RES BW ≥ 300 Hz without Option 007. For Option 007, see the characteristics section.

ManualsPlus.com

Tracking Generator Specifications (Option 002)

Frequency	
Frequency Range	300 kHz to 2.9 GHz
Frequency Readout Accuracy	±(frequency reference accuracy* × frequency + 5% × span + 295 Hz)
Minimum Resolution Bandwidth	300 Hz
* Frequency Reference Accuracy = (aging × period of time since adjustment + initial achievable accuracy + temperature stability).	

Amplitude

Output Level Range	
Range	–10 dBm to +1 dBm –10 dBm to +2.8 dBm (typical)
Resolution	0.10 dB
Maximum Leveled Output Power	+1 dBm minimum
Power Sweep Range	10 dB, 0.1 dB resolution

Output Level Accuracy	
Absolute Amplitude Accuracy	
(0 dBm at 300 MHz, 25 °C ± 10 °C)	±0.75 dB
Vernier Accuracy	
(refer to 0 dBm at 300 MHz, 25 °C ± 10 °C)	±0.20 dB/dB, ±0.5 dB max.
Level Flatness	
(0 dBm relative to 300 MHz)	±2.0 dB
Total Absolute Accuracy (25 °C ± 10 °C)	±3.25 dB

ManualsPlus.com

Spurious Outputs (at +1 dBm output power)	
Harmonic Spurious (300 kHz to 2.9 GHz)†	<–25 dBc
Non-Harmonic Spurious	
300 kHz to 2.0 GHz†	<–27 dBc
2.0 GHz to 2.9 GHz†	<–23 dBc
LO Feedthrough (3.9 GHz to 6.8 GHz)	<–16 dBm
† Fundamental Frequency.	

Residuals (RF power off)	
300 kHz to 2.9 GHz	<–78 dBm

Dynamic Range	
TG Feedthrough*	
300 kHz to 1 MHz	<–95 dBm
1 MHz to 2.0 GHz	<–115 dBm
2.0 GHz to 2.9 GHz	<–110 dBm
* Leakage measured with maximum levelled output power into 50 Ω and with 50 Ω on INPUT 50Ω	

Power Sweep	
Range	10 dB
Resolution	0.1 dB

ManualsPlus.com

Inputs and Outputs Specifications

CAUTION Any electrostatic discharge according to IEC 801-2/1991 to the center pins of any of the connectors may cause damage to the associated circuitry.

IF INPUT *(Deleted on Option 002 and Option 327)*	
Connector	SMA female, front panel
Input level for full-screen deflections (external mixing mode, 0 dBm reference level, 30 dB conversion loss)	–30 dBm ± 1.5 dB

GPIB	
Connector	IEEE-488 bus connector
Interface Functions	SH1, AH1, T6, TE0, L4, LE0, SR1, RL1, PP1, DC1, DT1, C1, C28
Direct Plotter Output	Supports HP 7225A, HP7440A, HP 7470A, HP 7475A,HP 7550A
Direct Printer Output	Supports HP 3630A PaintJet, HP 2225A ThinkJet

CAL OUTPUT	
Connector	BNC female, front panel
Frequency	300 MHz ±(300 MHz × frequency reference accuracy†)
Amplitude	–10 dBm ±0.3 dB

† Frequency Reference Accuracy = (aging × period of time since adjustment + initial achievable accuracy + temperature stability).

1ST LO OUTPUT	
Connector	SMA female, front panel
Amplitude	
Non-Option 002	+16.5 dBm ±2.0 dB
Option 002	+14.5 dBm ±3.0 dB

10 MHz REF IN/OUT	
Connector	BNC female, rear panel
Output Frequency	10 MHz ±(10 MHz × frequency reference accuracy†)

† Frequency Reference Accuracy = (aging × period of time since adjustment + initial achievable accuracy + temperature stability).

ManualsPlus.com

General Specifications

Environmental Specifications	
Military Specification per MIL-T-28800, Type III, Class 3, Style B (EC)/ Style C (E), as follows:	
Calibration Interval	2 years
Warmup	5 minutes from ambient conditions*
Temperature	
Operating	–10 °C to +55 °C (E) / 0 °C to +55 °C (EC)
Non-operating	–51 °C to +71 °C
Humidity	95% at 40 °C for 5 days
Altitude	
Operating	15,000 feet
Non-operating	50,000 feet
Rain resistance	Drip-proof at 16 liters/hour/square foot
Vibration	
5 to 15 Hz	0.060 inch peak-to-peak excursion
16 to 25 Hz	0.040 inch peak-to-peak excursion
26 to 55 Hz	0.020 inch peak-to-peak excursion
Pulse Shock	
Half Sine	30 g for 11 ms duration
Transit Drop	8 inch drop on 6 faces and 8 corners
Power Main	Voltage fluctuations within the range specified in the spectrum analyzer “Power Requirements.”
Power Main	Operating environment within the limits of installation category II according to IEC 1010.
Pollution	Operating environment within the limits of pollution degree 2 according to IEC 664.

* Two hours for conditions of internal condensation, 30 minutes to meet frequency response specifications without preselector peaking. When operating outside the 20 °C to 30 °C ambient temperature range, preselector peaking is always required to meet frequency response specifications.

ManualsPlus.com

Electromagnetic Compatibility	
	Conducted and radiated interference is in compliance with CISPR, Publication 11 (1990).
Military Specification	Meets the requirements of MIL-STD-461C, Part 2, with the exceptions shown below:
Conducted Emissions	
CE01 (Narrowband)	1 kHz to 15 kHz only
CE03 (Narrowband)	Full limits
CE03 (Broadband)	20 dB relaxation from 15 kHz to 100 kHz
Conducted Susceptibility	
CS01	Full Limits
CS02	Full Limits with 40 dB relaxation at IF frequencies. Refer also to “Radiated Immunity” in Amplitude Characteristics.
CS06	Full Limits
Radiated Emissions	
RE01	Test probe at 15 cm, front and rear panel search excluded.
RE02	Full limits to 1 GHz
Radiated Susceptibility	
RS03	Limited to 3 V/m from 14 kHz to 1 GHz with 40 dB relaxation at IF frequencies. Refer also to “Radiated Immunity” in Amplitude Characteristics.

ManualsPlus.com

Power Requirements	
115 Vac Operation	
Voltage	90 V to 140 V rms
Current	3.2 A rms maximum
Frequency	47 Hz to 440 Hz
230 Vac Operation	
Voltage	180 V to 250 V rms
Current	1.8 A rms maximum
Frequency	47 Hz to 66 Hz
Maximum Power Dissipation	180 W

Audible Noise	<5.0 Bels, 20 °C to 30 °C (ISO DP7779)

Weight	20 kg (44 lb)

ManualsPlus.com

Dimensions

With Handle and Front Cover:

(A) 202 mm (7-15/16 in) high

(C) 366 mm (14-7/16 in) wide

(F) 503 mm (19-13/16 in) deep

Without Handle and Front Cover:

(B) 187 mm (7-3/8 in) high

(D) 337 mm (13-1/4 in) wide

(E) 461 mm (18-1/8 in) deep

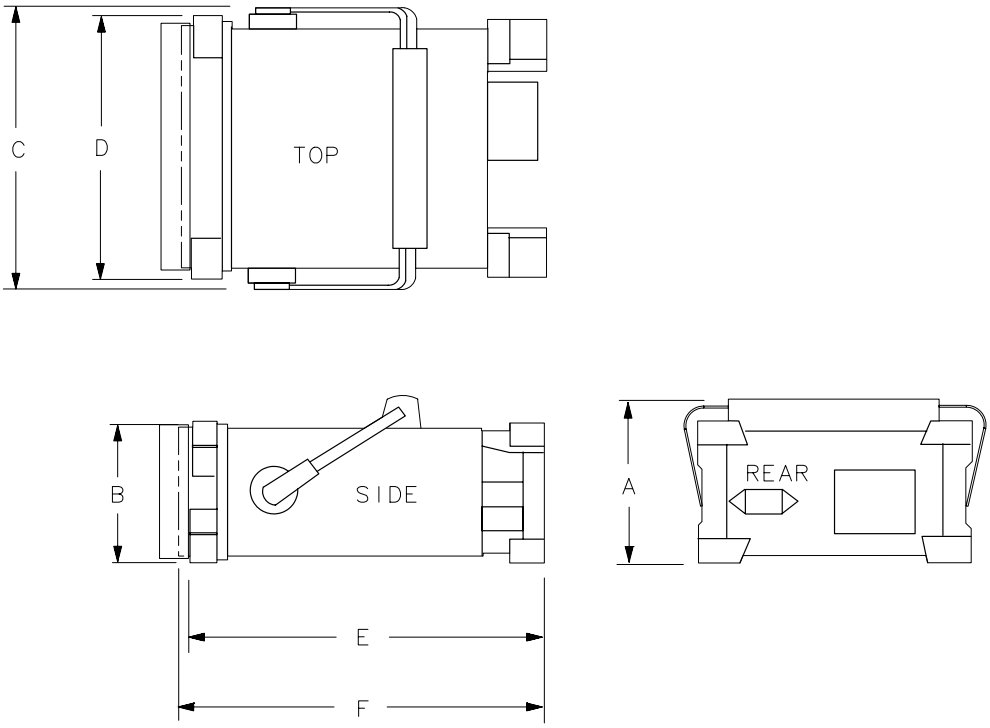

FORMAT 1

ManualsPlus.com

Frequency Characteristics

These are not specifications. Characteristics provide useful information about instrument performance.

Frequency Reference Accuracy	
Non-Option 103	
Initial Achievable Accuracy	$<\pm 2.2 \times 10^{-8}$
(includes gravitational sensitivity, retrace, and settability)	
Daily Aging (average over 7 days after being powered on for 7 days)	$<\pm 5 \times 10^{-10}$
Warmup	
(Internal frequency reference selected)	
After 5 minutes	$<\pm 1 \times 10^{-7}$ of final frequency* (0 °C to +55 °C) $<\pm 1 \times 10^{-6}$ of final frequency* (–10 °C)
After 15 minutes	$<\pm 1 \times 10^{-8}$ of final frequency* (–10 °C to +55 °C)
Option 103	
Initial Achievable Accuracy	$<\pm 1 \times 10^{-6}$
* Final frequency is defined as frequency 60 minutes after power-on with analyzer set to internal frequency reference.	

Bandwidth Selectivity	
RES BW ≤100 Hz	<4.5:1
RES BW = 1 MHz	<8:1
RES BW = 2 MHz	<5.5:1

ManualsPlus.com

Impulse Bandwidth	
RES BW 2 MHz	2.93 MHz ±10%
RES BW 1 MHz	1.60 MHz ±7%
RES BW 300 kHz	491 kHz ±7%
300 Hz ≤ RES BW ≤ 100 kHz	1.62 × RES BW ± 10%

Stability	
Noise Sidebands	
For frequencies ≤ 1 GHz, 100 kHz offset from carrier, and frequency span > 2 MHz	≤121 dBc/Hz

ManualsPlus.com

Figure 2-1 Noise Sidebands Normalized to 1 Hz BW versus Offset from Carrier

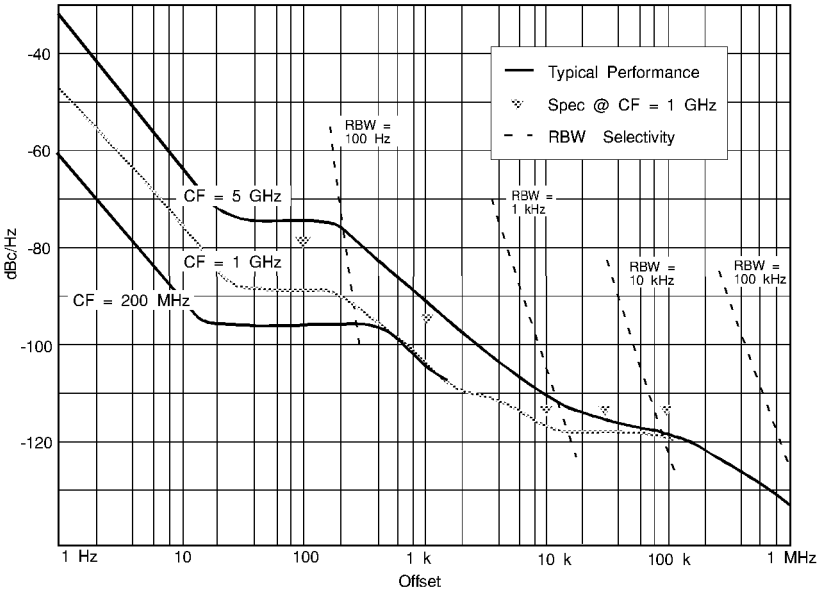

Figure 2-2 Typical On-Screen Dynamic Range vs. Offset from 1 GHz Center Freq. for all RBW's

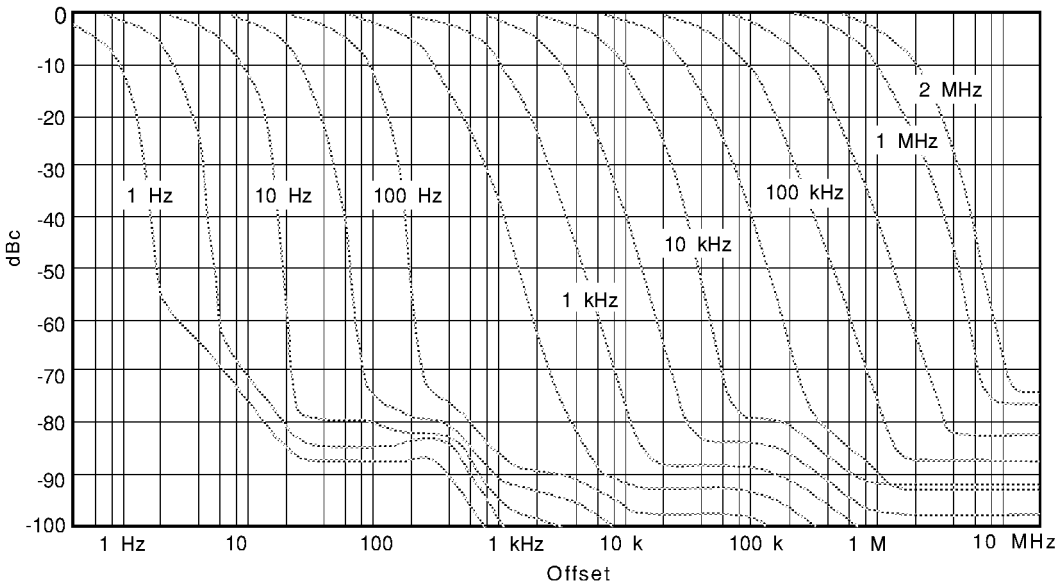

ManualsPlus.com

Sweep

Sweep Time Accuracy	
Span ≥100 Hz	<±15%

Resolution Bandwidth Usability* ***(Non-Option 103)***			
RES BW	**Maximum Usable Frequency**		
	Video Average OFF	**Video Average ON, 10 Video Averages**	
		Source/Spectrum Analyzer Frequency References	
		Locked†	**Independent‡**
≥30 Hz	>2.9 GHz	>2.9 GHz	>2.9 GHz
10 Hz	>2.9 GHz	>2.9 GHz	>2.9 GHz
3 Hz	>2.9 GHz	>2.9 GHz	2 GHz
1 Hz	>2.9 GHz	>2.9 GHz	200 MHz

* Resolution Bandwidth Usability is the maximum usable frequency for a given resolution bandwidth. The maximum usable frequency is limited by signal instability resulting from spectrum analyzer residual FM during the measurement interval. Measurements at frequencies less than the maximum usable frequency will have a typical amplitude uncertainty of less than 1 dB. These characteristics apply after a 30 minute warmup.

† Source and spectrum analyzer share the same frequency reference.

‡ Source and spectrum analyzer do not share the same frequency reference.

ManualsPlus.com

Amplitude Characteristics

Dynamic Range

Figure 2-3 **Nominal Dynamic Range**

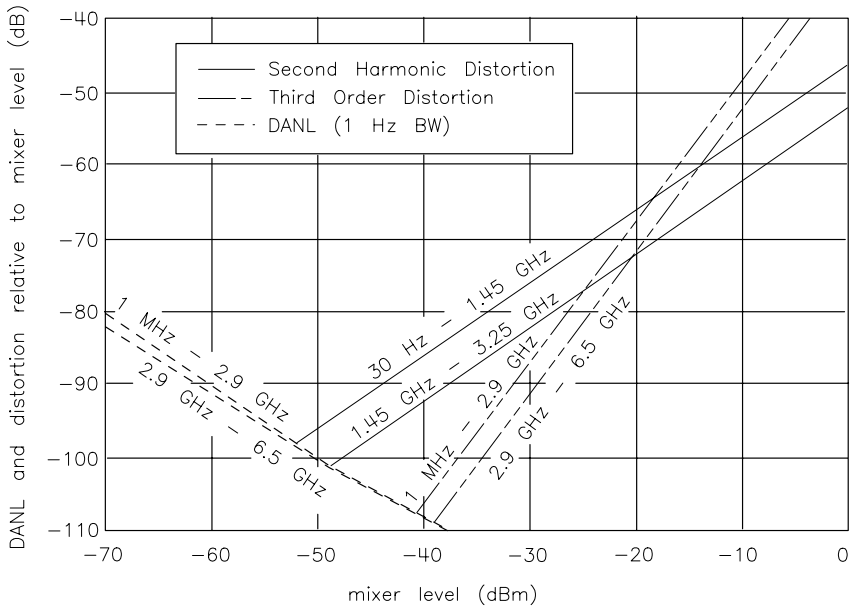

Amplitude Measurement Range

Spurious Responses	Frequency Range	Distortion
(all input related spurious responses <1 kHz from the carrier)	10 MHz to 2.9 GHz	<–55 dBc

Amplitude Accuracy

Input Attenuator Repeatability	<±0.2 dB

Pulse Digitization Uncertainty	
(Pulse response mode, PRF >720/sweep time)	
Standard Deviation	<0.2 dB

ManualsPlus.com

Marker Amplitude Resolution		
(EC-Series instruments and E-Series instruments with Option 007, sweep time < 30 ms, zero span)		
Scale:	LOG 10 dB/DIV	≤ (1/2) dB
	LOG 5 dB/DIV	≤ (1/4) dB
	LOG 2 dB/DIV	≤ (1/10) dB
	LOG 1 dB/DIV	≤ (1/20) dB
	LINEAR	≤ Reference Level/200

Demodulation

Spectrum Demodulation	
Modulation Type	AM and FM (5 kHz peak deviation)
Audio Output	Internal speaker and phone jack with volume control.
Pause Time at Marker Frequency	100 ms to 60 s

Radiated Immunity

Radiated Immunity
When tested at 3 V/m according to IEC 801-3/1984 the displayed average noise level will be within specifications over the full immunity test frequency range of 27 to 500 MHz except that at the immunity test frequency of 310.7 MHz ± selected resolution bandwidth the displayed average noise level may be up to –80 dBm. When the analyzer tuned frequency is identical to the immunity test signal frequency there may be signals of up to –90 dBm displayed on the screen.

ManualsPlus.com

Option 002 Tracking Generator Characteristics

Tracking Drift	Usable in a 1 kHz RES BW after 5 minutes with SRC PWR set to ON*. Usable in a 300 Hz RES BW after 30 minutes with SRC PWR set to ON*.
* Setting the LINE switch ON does not automatically set SRC PWR to ON.	

Effective Source Match	<1.92:1

Dynamic Range	
300 kHz to 1 MHz	96 dB
1 MHz to 2.0 GHz	116 dB
2.0 GHz to 2.9 GHz	111 dB

ManualsPlus.com

Inputs and Outputs Characteristics

CAUTION Any electrostatic discharge according to IEC 801-2/1991 to the center pins of any of the connectors may cause damage to the associated circuitry.

INPUT 50Ω	
Connector	Precision Type N female, front panel
Impedance	50 Ω
VSWR (at tuned frequency)	
≥10 dB Input Attenuation	<1.5:1
0 dB Input Attenuation	<3.0:1
LO Emission Level* (average)	
10 dB Input Attenuation	<–70 dBm
* Level of 1st LO, 3.0 to 6.8 GHz, present at INPUT 50Ω connector.	

IF INPUT *(Deleted on Option 002 and Option 327)*	
(2nd IF input for use with external mixers)	
Connector	SMA female, front panel
Impedance (dc coupled)	50 Ω
Frequency	310.7 MHz
Noise Figure	7 dB
1 dB Gain Compression Level	–23 dBm
Full Screen Level	–30 dBm
(Gain Compression and Full Screen Levels apply with 30 dB conversion loss setting and 0 dBm reference level.)	

1ST LO OUTPUT	
Connector	SMA female, front panel
Impedance	50 Ω
Frequency Range	3.0000 GHz to 6.8107 GHz†
† 3.8107 GHz to 6.8107 GHz for analyzers equipped with Option 002.	

ManualsPlus.com

CAL OUTPUT	
Connector	BNC female, front panel
Impedance	50 Ω

10 MHz REF IN/OUT	
Connector	BNC female, rear panel
Impedance	50 Ω
Output Amplitude	0 dBm
Input Frequency	10 MHz × $(1 \pm 2 \times 10^{-5})$
Input Amplitude	–2 to +10 dBm
External Reference Phase Noise	
Analyzer noise sideband performance will not be degraded if the external reference phase noise is within the limits given below.	
Non-Option 103	<–135 dBc/Hz at 100 Hz offset
Option 103	<–110 dBc/Hz at 100 Hz offset

VIDEO OUTPUT* *(Deleted on Option 327)*	
Connector	BNC female, rear panel
Impedance (dc coupled)	50 Ω
Amplitude (RES BW ≥300 Hz)	0 to +1 V full scale
Scaling	
RES BW ≥300 Hz	linear or log 100 dB/V
RES BW ≤100 Hz	4.8 kHz, auto-ranged level with dc offset

* The VIDEO OUTPUT is a video signal for RES BW ≥300 Hz with switching transients and IF ADJ signals between sweeps. For RES BW ≤100 Hz the output is an IF signal with transients and IF ADJ signals between and during sweeps.

ManualsPlus.com

LO SWP|FAV OUTPUT and LO SWP|0.5 V/GHz OUTPUT*	
Connector	BNC female, rear panel
Impedance (dc coupled)	120 Ω
LO SWP OUTPUT (no load)	0 to + 10 V
0.5 V/GHz OUTPUT	
Internal Mixer Mode	0.5 V/GHz of tuned frequency (no load)
External Mixer Mode	([(1.5 V/GHz) × LO frequency)] – 0.2054 V) ±50 mV
0.25 V/GHz OUTPUT†	0.25 V/GHz of tuned frequency (no load)

* This connector is labeled `LO SWP|0.5 V/GHz OUTPUT` on older spectrum analyzers and `LO SWP|FAV OUTPUT` on newer spectrum analyzers.

† The 0.25 V/GHz output is available only in the 8564E and 8565E.

BLKG/GATE OUTPUT	
Connector	BNC female, rear panel
Impedance	50 Ω
Blanking Mode	
Amplitude during sweep	Low TTL Level
Amplitude during retrace	High TTL Level
Gate Mode	
Gate On	High TTL level
Gate Off	Low TTL level

EXT/GATE TRIG INPUT	
Connector	BNC female, rear panel
Impedance	10 kΩ
Trigger Level	Settable to high TTL, or low TTL, or edge triggered TTL

PROBE POWER (front panel)	
Voltage	+15 V dc, –12.6 V dc
Current	150 mA maximum, each

ManualsPlus.com

EARPHONE	
Connector	1/8 inch miniature monophonic jack, rear panel
Power Output	0.2 W into 4 Ω

2ND IF OUT			
(*Option 001 instruments only*)			
Connector	SMA female, rear panel		
Impedance	50 Ω		
Frequency	310.7 MHz		
Serial Number Prefix	**3 dB BW**	**Noise Figure**	**Conversion Gain**
<3632A	>28 MHz	25 dB	–15 dB
≥3632A	>28 MHz	20 dB	– 8 dB

RF OUTPUT 50Ω	
(Option 002 analyzers only)	
Connector	Type N female
Impedance	50 Ω
Maximum Safe Reverse Level	+30 dBm, 30 Vdc
Output VSWR (0 dB attenuation)	1.92:1

EXT ALC INPUT	
(Option 002 analyzers only)	
Connector	BNC female
Impedance	>10 kΩ
Polarity	Use with negative detector

ALT SWEEP OUT	
(Option 005 analyzers only)	
Connector	BNC female, rear panel
Impedance	100 Ω

ManualsPlus.com

Regulatory Information

The following information applies to the 8560EC spectrum analyzer.

DECLARATION OF CONFORMITY

According to ISO/IEC Guide 22 and CEN/CENELEC EN 45014

Manufacturer's Name: Agilent Technologies, Inc.

Manufacturer's Address: 1400 Fountaingrove Parkway
Santa Rosa, CA 95403-1799
USA

Declares that the products

Product Name: Spectrum Analyzer

Model Number: 8560EC, 8561EC, 8562EC, 8563EC, 8564EC, 8565EC

Product Options: This declaration covers all options of the above products.

Conform to the following product specifications:

EMC: IEC 61326-1:1997+A1:1998 / EN 61326-1:1997+A1:1998

Standard	Limit
CISPR 11:1990 / EN 55011-1991	Group 1, Class A
IEC 61000-4-2:1995+A1998 / EN 61000-4-2:1995	4 kV CD, 8 kV AD
IEC 61000-4-3:1995 / EN 61000-4-3:1995	3 V/m, 80 - 1000 MHz
IEC 61000-4-4:1995 / EN 61000-4-4:1995	0.5 kV sig., 1 kV power
IEC 61000-4-5:1995 / EN 61000-4-5:1996	0.5 kV L-L, 1 kV L-G
IEC 61000-4-6:1996 / EN 61000-4-6:1998	3 V, 0.15 – 80 MHz
IEC 61000-4-11:1994 / EN 61000-4-11:1998	1 cycle, 100%

Safety: IEC 61010-1:1990 + A1:1992 + A2:1995 / EN 61010-1:1993 +A2:1995
CAN/CSA-C22.2 No. 1010.1-92

Supplementary Information:
The products herewith comply with the requirements of the Low Voltage Directive 73/23/EEC and the EMC Directive 89/336/EEC and carry the CE-marking accordingly.

Santa Rosa, CA, USA 18 Jan. 2000

Greg Pfeiffer/Quality Engineering Manager

For further information, please contact your local Agilent Technologies sales office, agent or distributor.

ManualsPlus.com

The following information applies to the 8560E spectrum analyzer.

DECLARATION OF CONFORMITY

According to ISO/IEC Guide 22 and CEN/CENELEC EN 45014

Manufacturer's Name: Agilent Technologies, Inc.

Manufacturer's Address: 1400 Fountaingrove Parkway
Santa Rosa, CA 95403-1799
USA

Declares that the products

Product Name: Spectrum Analyzer

Model Number: 8560E, 8560EL, 8561E, 8562E, 8562EL, 8563E, 8564E, 8565E

Product Options: This declaration covers all options of the above products.

Conform to the following product specifications:

	Standard	Limit
EMC:	CISPR 11:1990 / EN 55011-1991	Group 1, Class A
	IEC 801-2:1984/EN 50082-1:1992	4 kV CD, 8 kV AD
	IEC 801-3:1984/EN 50082-1:1992	3 V/m, 80 - 1000 MHz
	IEC 801-4:1988/EN 50082-1:1992	0.5 kV sig., 1 kV power

Safety: IEC 61010-1:1990 + A1:1992 + A2:1995 / EN 61010-1:1993 +A2:1995
CAN/CSA-C22.2 No. 1010.1-92

Supplementary Information:
The products herewith comply with the requirements of the Low Voltage Directive 73/23/EEC and the EMC Directive 89/336/EEC and carry the CE-marking accordingly.

Santa Rosa, CA, USA 1 Nov. 2000

Greg Pfeiffer/Quality Engineering Manager

For further information, please contact your local Agilent Technologies sales office, agent or distributor.

ManualsPlus.com

Notice for Germany: Noise Declaration

LpA < 70 dB am Arbeitsplatz (operator position) normaler Betrieb (normal position) nach DIN 45635 T. 19 (per ISO 7779)

CE: European Community

The product design was approved for the European Community.

ISM1-A: Industrial Scientific and Medical Group 1, Class A

The instrument meets the requirements of CISPER 11, Clause 4.

CSA: Canadian Standards Association

The CSA mark is a registered trademark of the Canadian Standards Association. The product meets the requirements.

IEC: International Electrotechnical Commission

This instrument has been designed and tested in accordance with IEC Publication 1010, Safety Requirements for Electronic Measuring Apparatus, and has been supplied in a safe condition. The instruction documentation contains information and warnings which must be followed by the user to ensure safe operation and to maintain the instrument in a safe condition.

This product conforms to Enclosure Protection IP 2 0 according to IEC-529. The enclosure protects against finger access to hazardous parts within the enclosure; the enclosure does not protect against the entrance of water.

ManualsPlus.com

3 8561E/EC Specifications and Characteristics

ManualsPlus.com

Specifications and Characteristics

The following tables list the spectrum analyzer specifications. Unless stated otherwise, all specifications describe the analyzer warranted performance under the following conditions:

- Five-minute warmup in ambient conditions
- Auto-coupled controls
- Preselector peaked at the signal of interest
- Digital trace display
- IF ADJ ON
- REF LVL CAL adjusted
- 1ST LO OUTPUT terminated in 50 ohms
- 2ND IF OUTPUT (Option 001 analyzers) terminated in 50 ohms
- Two-year calibration cycle
- Environmental requirements met

After a 30-minute warmup at ambient temperature range of 20 °C to 30 °C, the preselector does not have to be peaked at each signal of interest. Factory preselector-peak values are sufficient to meet all specifications.

NOTE REF LVL CAL uses the CAL OUTPUT signal to calibrate the reference level. Internal temperature changes determine how often this adjustment should be performed. Amplitude temperature drift is a nominal 1 dB/10 °C. The nominal temperature variation within the instrument is 10 °C, most of which occurs during the first 30 minutes after power-on. Internal temperature equilibrium is reached after 2 hours of operation at a stable ambient temperature.

Characteristics provide useful information in the form of typical, nominal, or approximate values for analyzer performance. Tables of spectrum analyzer characteristics follow the specifications.

ManualsPlus.com

Calibration Cycle

The performance tests in Chapter 2 should be used to check the analyzer against its specifications every two years. Specifications are listed in this chapter.

The frequency reference must be adjusted as well as checked at the same time. Refer to the “10 MHz Frequency Reference Adjustment” in the *8561E/EC and 8563E/EC Spectrum Analyzers Service Guide*.

ManualsPlus.com

Frequency Specifications

Frequency Range			
Internal Mixing			
AC Coupled	100 kHz to 6.5 GHz		
DC Coupled	30 Hz to 6.5 GHz		
Internal Mixing Bands	**Frequency Range**	**Harmonic Mixing Mode N***	
Band 0	30 Hz to 2.9 GHz	1–	
Band 1	2.75 GHz to 6.5 GHz	1–	
External Mixing	18 GHz to 325 GHz		
External Mixing Bands			
Frequency Band	**Frequency Range**	**Harmonic Mixing Mode (N*)**	
		Preselected	**Unpreselected**
K	18.0 to 26.5	n/a	6–
A	26.5 to 40.0	8+	8–
Q	33.0 to 50.0	10+	10–
U	40.0 to 60.0	10+	10–
V	50.0 to 75.0	14+	14–
E	60.0 to 90.0	n/a	16–
W	75.0 to 110.0	18+	18–
F	90.0 to 140.0	n/a	24–
D	110.0 to 170.0	n/a	30–
G	140.0 to 220.0	n/a	36–
Y	170.0 to 260.0	n/a	44–
J	220.0 to 325.0	n/a	54–

* N is the harmonic mixing mode. For negative mixing modes (as indicated by the "–"), the desired 1st LO harmonic is higher than the tuned frequency by the 1st IF (3.9107 GHz for the 30 Hz to 2.9 GHz band, 310.7 MHz for all other bands). For positive mixing modes, the desired 1st LO harmonic is lower than the tuned frequency by 310.7 MHz.

ManualsPlus.com

Frequency Readout Accuracy	
Accuracy of START, CENTER, STOP or MARKER frequency	
SPAN > 2 MHz × N*	<±(frequency readout × frequency reference accuracy† + 5% of frequency span + 15% of resolution bandwidth + 10 Hz)
SPAN ≤ 2 MHz × N*	<±(frequency readout × frequency reference accuracy† + 1% of frequency span + 15% of resolution bandwidth + 10 Hz)

* N is the harmonic mixing mode.

† frequency reference accuracy = (aging × period of time since adjustment) + initial achievable accuracy + temperature stability.

Frequency Count Marker	
Frequency Count Marker Resolution	Selectable from 1 Hz to 1 MHz
Frequency Count Marker Accuracy (for signal-to-noise ratio ≥25 dB)	<±(marker frequency × frequency reference accuracy‡ + 2 Hz × N† + 1 LSD)
Delta Frequency Count Accuracy (for signal-to-noise ratio ≥25 dB)	<±(delta frequency × frequency reference accuracy‡ + 4 Hz × N† + 2 LSD)

† N is the harmonic mixing mode.

‡ Frequency Reference Accuracy = (aging × period of time since adjustment + initial achievable accuracy + temperature stability).

Frequency Reference Accuracy	
Non-Option 103	
Aging	<±0.5 × 10^{-9}/day (after 7 day warmup)
	<±1 × 10^{-7}/year
Temperature Stability	<±1 × 10^{-8}, –10 °C to +55 °C, referenced to 25 °C
Option 103	
Aging	<±2 × 10^{-6}/year
Settability	<±1 × 10^{-6}
Temperature Stability	<±1 × 10^{-6}, –10 °C to +55 °C, referenced to 25 °C

ManualsPlus.com

Stability		
Residual FM		
(zero span, 10 Hz RES BW)		
Non-Option 103	< 1.0 Hz × N* peak-to-peak in 20 ms†	
Option 103	< 10 Hz × N* peak-to-peak in 20 ms	
Noise Sidebands		
For Frequencies ≤1 GHz		
(Refer to the characteristics section for frequencies > 2.9 GHz)		
Offset	**Non-Option 103**	**Option 103**
100 Hz		
serial number prefix <3424A	<–80 dBc/Hz‡	<–70 dBc/Hz‡
serial number prefix ≥3424A	<–88 dBc/Hz‡	<–70 dBc/Hz‡
1 kHz	<–97 dBc/Hz‡	<–90 dBc/Hz‡
10 kHz††	<–113 dBc/Hz§	<–113 dBc/Hz§
30 kHz††	<–113 dBc/Hz#	<–113 dBc/Hz#
100 kHz‡‡		
serial number prefix <3424A	<–113 dBc/Hz§	<–113 dBc/Hz§
serial number prefix ≥3424A	<–117 dBc/Hz**	<–117 dBc/Hz**

* N is the harmonic mixing mode.

† See Resolution Bandwidth Usability in “Frequency Characteristics” for further information.

‡ Add 5.2 dB × (f/1 GHz) –1) for f > 1 GHz and f ≤ 2.9 GHz.

§ Add 2.5 dB × (f/1 GHz) –1) for f > 1 GHz and f ≤ 2.9 GHz.

#Add 3.0 dB × (f/1 GHz) –1) for f > 1 GHz and f ≤ 2.9 GHz.

**Add 2.0 dB for frequencies > 1 GHz and ≤ 2.9 GHz

†† For resolution bandwidth ≤ 1 kHz or frequency span ≤ 745 kHz.

‡‡ For resolution bandwidth ≥ 3 kHz or frequency span > 745 kHz.

ManualsPlus.com

Frequency Span	
Range	
Internal Mixing	0 Hz, 100 Hz to 6.5 GHz over the 10-division display horizontal axis, variable in approximately 1% increments, or in a 1, 2, 5 sequence.
External Mixing†	Minimum span = 100 Hz × N*
Accuracy	
SPAN > 2 MHz × N*	<±5%
SPAN ≤ 2 MHz × N*	<±1%

* N is the harmonic mixing mode.

† Resolution bandwidths ≤100 Hz are not available in external mixing. External mixing is not available for Option 002 or Option 327.

ManualsPlus.com

Resolution Bandwidths (–3 dB)	
Range*	
Non-Option 103	1 Hz to 1 MHz (selectable in a 1, 3, 10 sequence) and 2 MHz (3 MHz at –6 dB)
Option 103	10 Hz to 1 MHz (selectable in a 1, 3, 10 sequence) and 2 MHz (3 MHz at –6 dB)
Accuracy	
1 Hz to 300 kHz RES BW	<±10%
1 MHz RES BW	<±25%
2 MHz RES BW	<+50%, –25%
Selectivity (60 dB/3 dB bandwidth ratio)	
RES BW ≥300 Hz	<15:1
RES BW ≤100 Hz	<5:1
Bandwidth Shape	
1 and 2 MHz RES BW	Approximately Gaussian
300 Hz to 300 kHz RES BW	Synchronously tuned, 4-pole filters
1 Hz to 100 Hz RES BW	Digital, approximately Gaussian
* Resolution bandwidths ≤100 Hz are not available in external mixing.	

Video Bandwidth	
(Post-detection low-pass filter averages displayed noise for a smooth trace.)*	
Range	1 Hz to 3 MHz† in a 1, 3, 10 sequence
* Video bandwidth filtering is not available in resolution bandwidths ≤ 100 Hz when SPAN 0 Hz with firmware revisions 930809 and earlier.	
† The video bandwidth upper limit is 450 kHz in sample detection mode.	

ManualsPlus.com

Sweep

Sweep Time	
Range	
Span = 0	
Non-Option 007 (E-Series)	
Analog display	50 µs to <30 ms
Digital display	30 ms to 6,000 s*
Option 007 E-Series, and all EC-Series instruments	
Digital display	50 µs to 6,000 s
Span ≥ 100 Hz	
RES BW ≥300 Hz	50 ms to 2,000 s†
RES BW ≤100 Hz	50 ms to 100,000 s (span-dependent)
Accuracy (Span = 0 Hz)	
Non-Option 007 (E-Series)	
Sweep time 30 ms to 6,000 s*	<±1%
Sweep time <30 ms	<±10%
Option 007 E-Series and all EC-Series instruments	
Sweep time 30 ms to 6,000 s*	<±1%
Sweep time <30 ms	<±0.1%
Sweep Trigger	Delayed, Free Run, Single, Line, External, or Video#

* 30 ms to 100 s for analyzers with serial prefix <3310A.

† 50 ms to 100 s for analyzers with serial prefix <3424A.

Video trigger is not available in RES BW settings ≤100 Hz.

ManualsPlus.com

Delayed Sweep	
Trigger Modes	Free Run, Line, External, Video*
Range	
Span = 0	
Non-Option 007 (E-Series)	+2 µs to +65.535 ms
Option 007 E-Series and all EC-Series instruments	
Sweep time ≥ 30 ms	+2 µs to +65.535 ms
Sweep time < 30 ms	–9.9 ms to +65.535 ms††
Span ≥ 100 Hz	+2 µs to +65.535 ms
Resolution	1 µs
Accuracy#	
Serial prefix 3310A and above	±1 µs
Serial prefix <3310A	
20 °C to 30 °C	±(1 µs + (0.05% × DELAY SWEEP setting)
–10 °C to +55 °C	±(1 µs + (0.12% × DELAY SWEEP setting)

* Video trigger is not available in RES BW settings ≤ 100 Hz.

†† Negative delayed sweep (pre-trigger) is also limited to 50 × sweep time.

In E-Series instruments without Option 007, the delay time will be subject to up to ±0.5 µs of jitter due to synchronization of the input edge trigger to the internal 1 MHz timebase. In E-series instruments with Option 007 and in EC-instruments using sweeptimes <30 ms, the delay time will experience up to ±83 ns of jitter due to synchronization of the input edge trigger to the internal 12 MHz timebase.

ManualsPlus.com

Time-Gated Spectrum Analysis

Gate Delay*	**Edge Mode**	**Level Mode**
Range	3 µs to 65.535 ms	≤0.5 µs
Resolution	1 µs	
Accuracy†		
Serial prefix 3310A and above	<±1 µs	
Serial prefix <3310A		
20 °C to 30 °C	± (1 µs + (0.05% × GATE DELAY setting)	
–10 °C to 55 °C	± (1 µs + (0.12% × GATE DELAY setting)	

* Time from GATE TRIGGER INPUT to positive edge of GATE OUTPUT.

† The gate delay time will experience up to ±0.5 µs of jitter due to synchronization of the input edge trigger to the internal 1 MHz timebase.

Gate Length*	
Range	1 µs to 65.535 ms
Resolution	1 µs
Accuracy	
Serial prefix 3310A and above	<±1 µs
Serial prefix <3310A	
20 °C to 30 °C	± (0.2 µs + (0.05% × GATE LENGTH setting)
–10 °C to 55 °C	± (0.2 µs + (0.12% × GATE LENGTH setting)

* Time from positive edge to negative edge of GATE OUTPUT.

Marker Frequency Resolution	SPAN/600 to a minimum of 1 Hz

Marker Time Resolution	Sweep time/600

ManualsPlus.com

Amplitude Specifications

Measurement Range

Maximum Safe Input Power	
Average Continuous Power (input attenuation ≥10 dB)	+30 dBm (1 W)
Peak Pulse Power (input attenuation ≥30 dB)	+50 dBm (100 W) for pulse widths ≤10 µs and <1% duty cycle.
DC Voltage	
AC Coupled	<±50 V
DC Coupled	<±0.2 V

Gain Compression	
10 MHz to 2.9 GHz (≤–5 dBm at input mixer‡)	<1.0 dB
2.9 GHz to 6.5 GHz (≤–3 dBm at input mixer†)	<1.0 dB

‡ Mixer level = input level – input attenuation.

ManualsPlus.com

Displayed Average Noise Level With no signal at input, 1 Hz video bandwidth, and 0 dB input attenuation, tracking generator off.		
Frequency Range	**10 Hz RES BW** *(Option 103)*	**1 Hz RES BW** *(Non-Option 103)*
30 Hz	<–80 dBm	<–90 dBm
100 Hz	<–80 dBm	<–90 dBm
1 kHz	<–95 dBm	<–105 dBm
10 kHz	<–110 dBm	<–120 dBm
100 kHz	<–110 dBm	<–120 dBm
1 MHz to 10 MHz	<–130 dBm	<–140 dBm
10 MHz to 2.9 GHz	<–135 dBm	<–145 dBm
2.9 GHz to 6.5 GHz	<–135 dBm	<–145 dBm

ManualsPlus.com

Spurious Responses		
All input-related spurious responses, except as noted below.	**Mixer Level***	**Distortion**
10 MHz to 6.5 GHz	–40 dBm	<–75 dBc
Second Harmonic Distortion		
(–40 dBm mixer level*)		
Applied Signal Frequency Range		
1 MHz to 1.45 GHz	–40 dBm	<–72 dBc
1.45 Hz to 3.25 GHz	–20 dBm	<–72 dBc
Third Order Intermodulation Distortion		
(with two signals at input mixer, spaced ≥1 kHz apart)		
Frequency Range		
1 MHz to 2.9 GHz	–30 dBm each	<–78 dBc
2.9 GHz to 6.5 GHz	–30 dBm each	<–90 dBc
Image and Multiple Responses		
Frequency Range		
10 MHz to 6.5 GHz	–10 dBm	<–80 dBc
Out of Range Responses		
(due to input signals 6.5 GHz to 12.0 GHz)		
Frequency Range		
10 MHz to 6.5 GHz	–10 dBm	<–80 dBc
* Mixer Level = input level – input attenuation		

Residual Responses	
>200 kHz with no signal at input, 0 dB input attenuation, N† 1	<–90 dBm
† N harmonic mixing number	

ManualsPlus.com

Display Range

Amplitude Scale	10 vertical display divisions, with the reference level (0 dB) at the top graticule line.

Calibration	
LOG	10 dB/DIV for 100 dB display from reference level.*
	5 dB/DIV for 50 dB display expanded from reference level.†
	2 dB/DIV for 20 dB display expanded from reference level.
	1 dB/DIV for 10 dB display expanded from reference level.†
LINEAR	10% of reference level per division over the top nine divisions
	(all 10 divisions for RES BW ≤100 Hz) when calibrated in voltage.

* 10 dB/DIV for 70 dB display from reference level for RES BW ≤100 Hz when SPAN = 0 Hz.

† In E-Series instruments these scales are not available for sweep times < 30 ms without Option 007.

Accuracy

Reference Level Range	
LOG, adjustable in 0.1 dB steps	–120 dBm to +30 dBm
LINEAR, settable in 1% steps	2.2 µV to 7.07 V

ManualsPlus.com

Reference Level Uncertainty

Frequency Response		
(with 10 dB input attenuation)		**Typical**
Relative (referenced to midpoint between highest and lowest peak excursions)		(20 °C to 30 °C)
DC Coupled		
30 Hz to 2.9 GHz	<±1.0 dB	<±0.7 dB
2.9 GHz to 6.5 GHz	<±1.5 dB	<±1.1 dB
AC Coupled		
100 kHz to 2.9 GHz	<±1.1 dB	<±0.8 dB
2.9 GHz to 6.5 GHz	<±2.0 dB	<±1.0 dB
Absolute (referenced to 300 MHz CAL OUTPUT)		
DC Coupled		
30 Hz to 2.9 GHz	<±1.75 dB	<±1.0 dB
2.9 GHz to 6.5 GHz	<±2.5 dB	<±1.5 dB
AC Coupled		
100 kHz to 2.9 GHz	<±1.9 dB	<±1.2 dB
2.9 GHz to 6.5 GHz	<±3.0 dB	<±1.5 dB

Calibrator Uncertainty	
–10 dBm, 300 MHz	<±0.3 dB

Input Attenuator Switching Uncertainty	
(20 to 70 dB settings, referenced to 10 dB input attenuation)	
30 Hz to 2.9 GHz	<±0.6 dB/10 dB step, 1.8 dB max.

IF Gain Uncertainty	
(0 dBm to –80 dBm reference levels with 10 dB input attenuation)	<±1.0 dB

Resolution Bandwidth Switching Uncertainty	
(Referenced to 300 kHz resolution bandwidth at the reference level.)*	<±0.5 dB

* Scale fidelity is not the same for RES BW ≤100 Hz as for RES BW ≥300 Hz. Therefore, signals not at the reference level will experience an additional amplitude difference when switching between these two sets of RES BW settings, due to differences in scale fidelity.

ManualsPlus.com

Pulse Digitization Uncertainty	
(Pulse response mode, PRF >720/sweep time)	
LOG	
Resolution Bandwidth ≤ 1 MHz	<1.25 dB peak-to-peak
Resolution Bandwidth = 2 MHz	<3 dB peak-to-peak
LINEAR	
Resolution Bandwidth ≤ 1 MHz	<4% of reference level peak-to-peak
Resolution Bandwidth = 2 MHz	<12% of reference level peak-to-peak

IF Alignment Uncertainty	
(additional uncertainty when using 300 Hz RES BW only)	<±0.5 dB

ManualsPlus.com

Scale Fidelity*	
LOG	
Incremental	
0 to –90 dB range†	
RES BW ≥ 300 Hz	<±0.1 dB/dB
RES BW ≤ 100 Hz	<±0.2 dB/2 dB
Cumulative	
0 to –90 dB range†	
RES BW ≥ 300 Hz	<±0.1 dB/dB from the reference level to a maximum of ±0.85 dB
RES BW ≤ 100 Hz	<±0.2 dB/2 dB from the reference level to a maximum of ±0.85 dB
0 to –100 dB range†	
RES BW ≥ 300 Hz	±2.5 dB *characteristic*
RES BW ≤ 100 Hz	maximum of ±1.5 dB
LINEAR	<±3% of reference level

* Scale fidelity is not the same for RES BW ≤100 Hz as for RES BW ≥ 300 Hz. Therefore, signals not at the reference level will experience an additional amplitude difference when switching between these two sets of RES BW settings due to the differences in scale fidelity.

† 0 to –70 dB range for RES BW ≤100 Hz when SPAN = 0 Hz.

Marker Amplitude Resolution*		
	(Sweep time ≥ 30 ms)	
Scale:	LOG 10 dB/DIV	(1/6) dB
	LOG 5 dB/DIV	(1/12) dB
	LOG 2 dB/DIV	(1/30) dB
	LOG 1 dB/DIV	(1/60) dB
	LINEAR	Reference Level/600

* In E-Series instruments markers are not available for sweep times < 30 ms with RES BW ≥ 300 Hz without Option 007. For Option 007, see the characteristics section.

ManualsPlus.com

Inputs and Outputs Specifications

CAUTION Any electrostatic discharge according to IEC 801-2/1991 to the center pins of any of the connectors may cause damage to the associated circuitry.

IF INPUT *(Deleted on Option 002 and Option 327)*	
Connector	SMA female, front panel
Input level for full-screen deflections (external mixing mode, 0 dBm reference level, 30 dB conversion loss)	–30 dBm ± 1.5 dB

GPIB	
Connector	IEEE-488 bus connector
Interface Functions	SH1, AH1, T6, TE0, L4, LE0, SR1, RL1, PP1, DC1, DT1, C1, C28
Direct Plotter Output	Supports Agilent 7225A, Agilent 7440A, Agilent 7470A, Agilent 7475A, Agilent 7550A
Direct Printer Output	Supports HP 3630A PaintJet, HP 2225A ThinkJet

CAL OUTPUT	
Connector	BNC female, front panel
Frequency	300 MHz ±(300 MHz × frequency reference accuracy†)
Amplitude	–10 dBm ±0.3 dB

† Frequency Reference Accuracy = (aging × period of time since adjustment + initial achievable accuracy + temperature stability).

1ST LO OUTPUT	
Connector	SMA female, front panel
Amplitude	+16.5 dBm ±2.0 dB

10 MHz REF IN/OUT	
Connector	BNC female, rear panel
Output Frequency	10 MHz ±(10 MHz × frequency reference accuracy†)

† Frequency Reference Accuracy = (aging × period of time since adjustment + initial achievable accuracy + temperature stability).

ManualsPlus.com

General Specifications

Environmental Specifications	
Military Specification per MIL-T-28800, Type III, Class 3, Style B (EC)/ Style C (E), as follows:	
Calibration Interval	2 years
Warmup	5 minutes from ambient conditions*
Temperature	
Operating	–10 °C to +55 °C (E) / 0 °C to +55 °C (EC)
Non-operating	–51 °C to +71 °C
Humidity	95% at 40 °C for 5 days
Altitude	
Operating	15,000 feet
Non-operating	50,000 feet
Rain resistance	Drip-proof at 16 liters/hour/square foot
Vibration	
5 to 15 Hz	0.060 inch peak-to-peak excursion
16 to 25 Hz	0.040 inch peak-to-peak excursion
26 to 55 Hz	0.020 inch peak-to-peak excursion
Pulse Shock	
Half Sine	30 g for 11 ms duration
Transit Drop	8 inch drop on 6 faces and 8 corners
Power Main	Voltage fluctuations within the range specified in the spectrum analyzer “Power Requirements.”
Power Main	Operating environment within the limits of installation category II according to IEC 1010.
Pollution	Operating environment within the limits of pollution degree 2 according to IEC 664.

* Two hours for conditions of internal condensation, 30 minutes to meet frequency response specifications without preselector peaking. When operating outside the 20 °C to 30 °C ambient temperature range, preselector peaking is always required to meet frequency response specifications.

ManualsPlus.com

Electromagnetic Compatibility	
	Conducted and radiated interference is in compliance with CISPR, Publication 11 (1990).
Military Specification	Meets the requirements of MIL-STD-461C, Part 2, with the exceptions shown below:
Conducted Emissions	
CE01 (Narrowband)	1 kHz to 15 kHz only
CE03 (Narrowband)	Full limits
CE03 (Broadband)	20 dB relaxation from 15 kHz to 100 kHz
Conducted Susceptibility	
CS01	Full Limits
CS02	Full Limits with 40 dB relaxation at IF frequencies. Refer also to “Radiated Immunity” in Amplitude Characteristics.
CS06	Full Limits
Radiated Emissions	
RE01	Test probe at 15 cm, front and rear panel search excluded.
RE02	Full limits to 1 GHz
Radiated Susceptibility	
RS03	Limited to 3 V/m from 14 kHz to 1 GHz with 40 dB relaxation at IF frequencies. Refer also to “Radiated Immunity” in Amplitude Characteristics.

ManualsPlus.com

Power Requirements	
115 Vac Operation	
Voltage	90 V to 140 V rms
Current	3.2 A rms maximum
Frequency	47 Hz to 440 Hz
230 Vac Operation	
Voltage	180 V to 250 V rms
Current	1.8 A rms maximum
Frequency	47 Hz to 66 Hz
Maximum Power Dissipation	180 W

Audible Noise	<5.0 Bels, 20 °C to 30 °C (ISO DP7779)

Weight	20 kg (44 lb)

ManualsPlus.com

Dimensions

With Handle and Front Cover:

(A) 202 mm (7-15/16 in) high

(C) 366 mm (14-7/16 in) wide

(F) 503 mm (19-13/16 in) deep

Without Handle and Front Cover:

(B) 187 mm (7-3/8 in) high

(D) 337 mm (13-1/4 in) wide

(E) 461 mm (18-1/8 in) deep

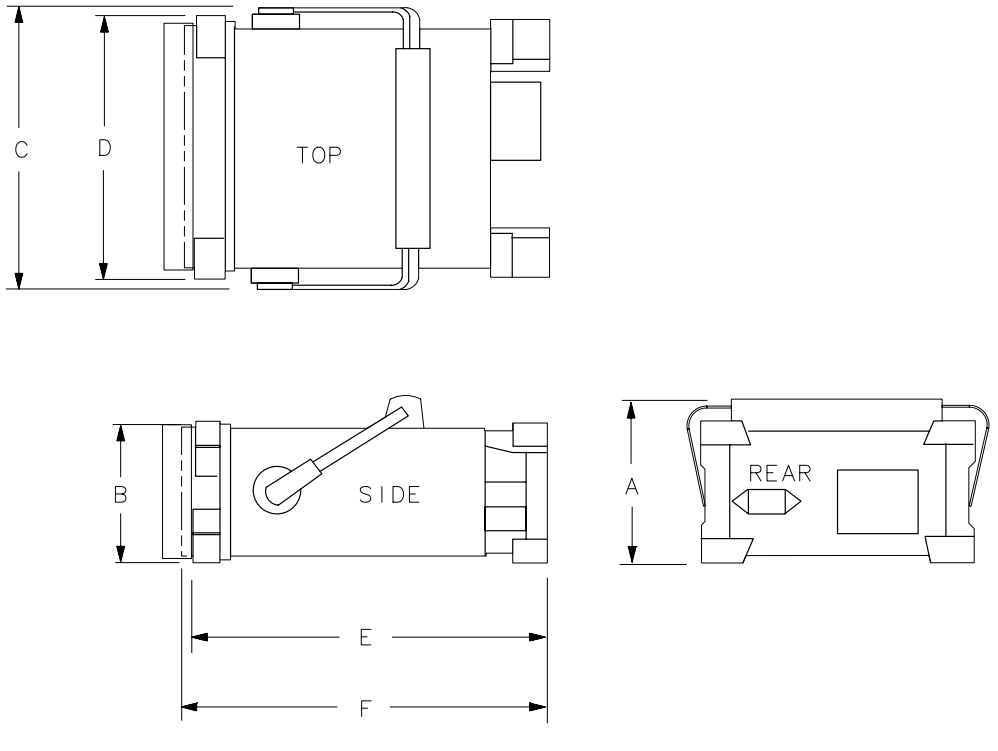

ManualsPlus.com

Frequency Characteristics

These are not specifications. Characteristics provide useful information about instrument performance.

Frequency Reference Accuracy	
Non-Option 103	
Initial Achievable Accuracy	$<\pm 2.2 \times 10^{-8}$
(includes gravitational sensitivity, retrace, and settability)	
Daily Aging (average over 7 days after being powered on for 7 days)	$<\pm 5 \times 10^{-10}$
Warmup	
(Internal frequency reference selected)	
After 5 minutes	$<\pm 1 \times 10^{-7}$ of final frequency* (0 °C to +55 °C) $<\pm 1 \times 10^{-6}$ of final frequency* (–10 °C)
After 15 minutes	$<\pm 1 \times 10^{-8}$ of final frequency* (–10 °C to +55 °C)
Option 103	
Initial Achievable Accuracy	$<\pm 1 \times 10^{-6}$

* Final frequency is defined as frequency 60 minutes after power-on with analyzer set to internal frequency reference.

Bandwidth Selectivity	
RES BW ≤100 Hz	<4.5:1
RES BW = 1 MHz	<8:1
RES BW = 2 MHz	<5.5:1

ManualsPlus.com

Impulse Bandwidth	
RES BW 2 MHz	2.93 MHz ±10%
RES BW 1 MHz	1.60 MHz ±7%
RES BW 300 kHz	491 kHz ±7%
300 Hz ≤ RES BW ≤ 100 kHz	1.62 × RES BW ± 10%

Stability	
Noise Sidebands	
For frequencies ≤ 1 GHz, 100 kHz offset from carrier, and frequency span > 2 MHz	≤121 dBc/Hz

ManualsPlus.com

Figure 3-1 Noise Sidebands Normalized to 1 Hz BW versus Offset from Carrier

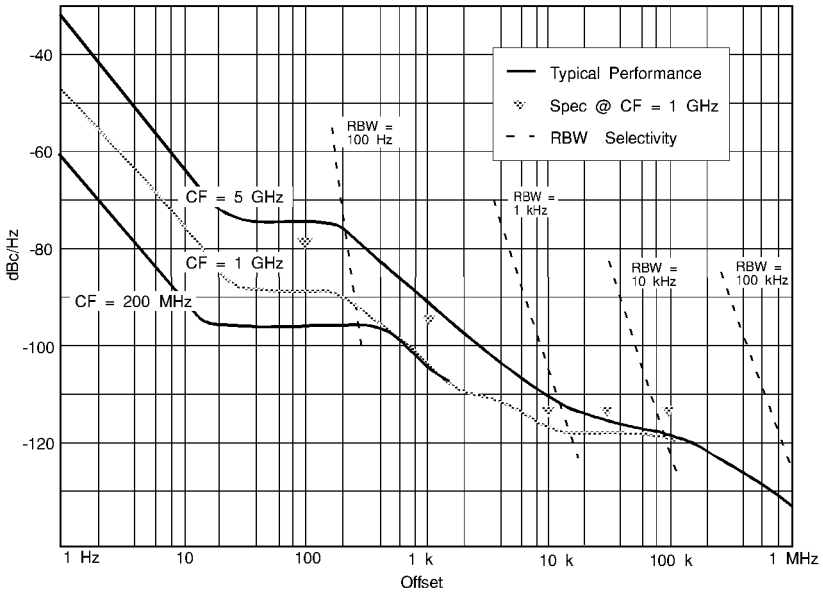

Figure 3-2 Typical On-Screen Dynamic Range vs. Offset from 1 GHz Center Freq. for all RBW's

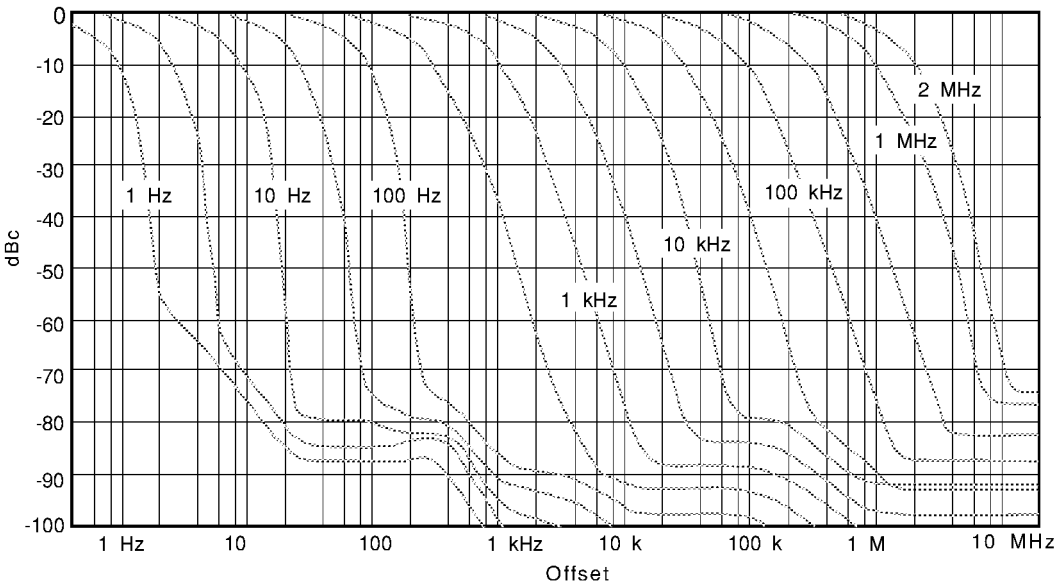

ManualsPlus.com

Sweep

Sweep Time Accuracy	
Span ≥100 Hz	<±15%

Resolution Bandwidth Usability* ***(Non-Option 103)***			
RES BW	**Maximum Usable Frequency**		
	Video Average OFF	**Video Average ON, 10 Video Averages**	
		Source/Spectrum Analyzer Frequency References	
		Locked†	**Independent‡**
≥30 Hz	>6.5 GHz	>6.5 GHz	>6.5 GHz
10 Hz	>6.5 GHz	>6.5 GHz	>6.5 GHz
3 Hz	>6.5 GHz	>6.5 GHz	2 GHz
1 Hz	>6.5 GHz	>6.5 GHz	200 MHz

* Resolution Bandwidth Usability is the maximum usable frequency for a given resolution bandwidth. The maximum usable frequency is limited by signal instability resulting from spectrum analyzer residual FM during the measurement interval. Measurements at frequencies less than the maximum usable frequency will have a typical amplitude uncertainty of less than 1 dB. These characteristics apply after a 30 minute warmup.

† Source and spectrum analyzer share the same frequency reference.

‡ Source and spectrum analyzer do not share the same frequency reference.

ManualsPlus.com

Amplitude Characteristics

Dynamic Range

Figure 3-3 **Nominal Dynamic Range**

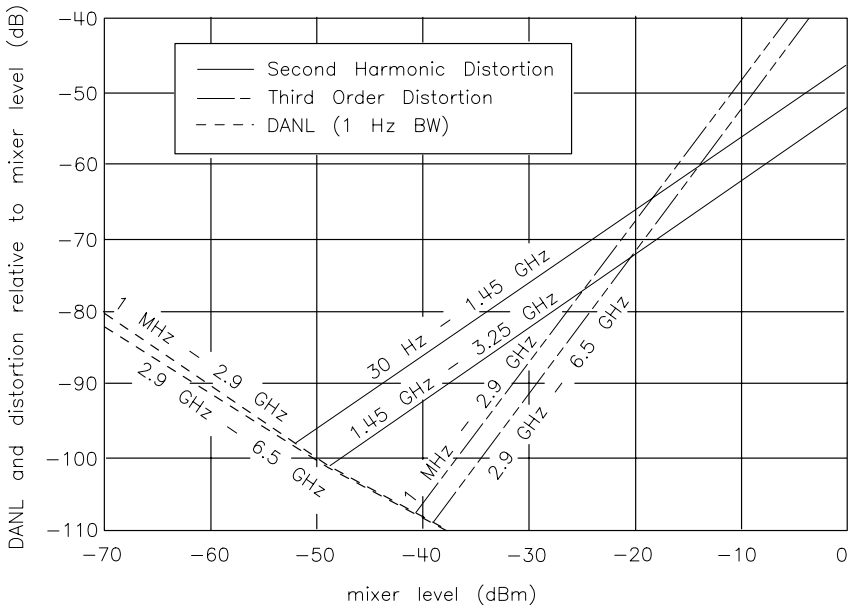

Amplitude Measurement Range

Spurious Responses	Frequency Range	Distortion
(all input related spurious responses <1 kHz from the carrier)	10 MHz to 2.9 GHz	<–55 dBc

Amplitude Accuracy

Band-to-Band Frequency Response	
(Frequency response uncertainty for measurements between the two internal mixing bands. Equivalent to the sum of the two In-Band Frequency Response values plus Band Switching Uncertainty.)	
dc Coupled	<3.5 dB
ac Coupled	<4.1 dB

Input Attenuator Repeatability	<±0.2 dB

ManualsPlus.com

Pulse Digitization Uncertainty	
(Pulse response mode, PRF >720/sweep time)	
Standard Deviation	<0.2 dB

Marker Amplitude Resolution		
(EC-Series and E-Series with Option 007, sweep time < 30 ms, zero span)		
Scale:	LOG 10 dB/DIV	≤ (1/2) dB
	LOG 5 dB/DIV	≤ (1/4) dB
	LOG 2 dB/DIV	≤ (1/10) dB
	LOG 1 dB/DIV	≤ (1/20) dB
	LINEAR	≤ Reference Level/200

Demodulation

Spectrum Demodulation	
Modulation Type	AM and FM (5 kHz peak deviation)
Audio Output	Internal speaker and phone jack with volume control.
Pause Time at Marker Frequency	100 ms to 60 s

Radiated Immunity

Radiated Immunity
When tested at 3 V/m according to IEC 801-3/1984 the displayed average noise level will be within specifications over the full immunity test frequency range of 27 to 500 MHz except that at the immunity test frequency of 310.7 MHz ± selected resolution bandwidth the displayed average noise level may be up to –80 dBm. When the analyzer tuned frequency is identical to the immunity test signal frequency there may be signals of up to –90 dBm displayed on the screen.

ManualsPlus.com

Inputs and Outputs Characteristics

CAUTION Any electrostatic discharge according to IEC 801-2/1991 to the center pins of any of the connectors may cause damage to the associated circuitry.

INPUT 50Ω	
Connector	Precision Type N female, front panel
Impedance	50 Ω
VSWR (at tuned frequency)	
	<1.5:1 for ≥10 dB Input Attenuation
	<3.0:1 for 0 dB Input Attenuation
LO Emission Level* (average)	
10 dB Input Attenuation	<–80 dBm
* Level of 1st LO, 3.0 to 6.8 GHz, present at INPUT 50Ω connector.	

IF INPUT *(Deleted on Option 002 and Option 327)*	
(2nd IF input for use with external mixers)	
Connector	SMA female, front panel
Impedance (dc coupled)	50 Ω
Frequency	310.7 MHz
Noise Figure	7 dB
1 dB Gain Compression Level	–23 dBm
Full Screen Level	–30 dBm
(Gain Compression and Full Screen Levels apply with 30 dB conversion loss setting and 0 dBm reference level.)	

1ST LO OUTPUT	
Connector	SMA female, front panel
Impedance	50 Ω
Frequency Range	3.0000 GHz to 6.8107 GHz†
† 3.8107 GHz to 6.8107 GHz for analyzers equipped with Option 002.	

ManualsPlus.com

CAL OUTPUT	
Connector	BNC female, front panel
Impedance	50 Ω

10 MHz REF IN/OUT	
Connector	BNC female, rear panel
Impedance	50 Ω
Output Amplitude	0 dBm
Input Frequency	10 MHz × $(1 \pm 2 \times 10^{-5})$
Input Amplitude	–2 to +10 dBm
External Reference Phase Noise	
Analyzer noise sideband performance will not be degraded if the external reference phase noise is within the limits given below.	
Non-Option 103	<–135 dBc/Hz at 100 Hz offset
Option 103	<–110 dBc/Hz at 100 Hz offset

VIDEO OUTPUT* *(Deleted on Option 327)*	
Connector	BNC female, rear panel
Impedance (dc coupled)	50 Ω
Amplitude (RES BW ≥300 Hz)	0 to +1 V full scale
Scaling	
RES BW ≥300 Hz	linear or log 100 dB/V
RES BW ≤100 Hz	4.8 kHz, auto-ranged level with dc offset

* The VIDEO OUTPUT is a video signal for RES BW ≥300 Hz with switching transients and IF ADJ signals between sweeps. For RES BW ≤100 Hz the output is an IF signal with transients and IF ADJ signals between and during sweeps.

ManualsPlus.com

LO SWP|FAV OUTPUT and LO SWP|0.5 V/GHz OUTPUT*	
Connector	BNC female, rear panel
Impedance (dc coupled)	120 Ω
LO SWP OUTPUT (no load)	0 to + 10 V
0.5 V/GHz OUTPUT	
Internal Mixer Mode	0.5 V/GHz of tuned frequency (no load)
External Mixer Mode	([(1.5 V/GHz) × LO frequency)] – 0.2054 V) ±50 mV
0.25 V/GHz OUTPUT†	0.25 V/GHz of tuned frequency (no load)

* This connector is labeled `LO SWP|0.5 V/GHz OUTPUT` on older spectrum analyzers and `LO SWP|FAV OUTPUT` on newer spectrum analyzers.

† The 0.25 V/GHz output is available only in the 8564E and 8565E.

BLKG/GATE OUTPUT	
Connector	BNC female, rear panel
Impedance	50 Ω
Blanking Mode	
Amplitude during sweep	Low TTL Level
Amplitude during retrace	High TTL Level
Gate Mode	
Gate On	High TTL level
Gate Off	Low TTL level

EXT/GATE TRIG INPUT	
Connector	BNC female, rear panel
Impedance	10 kΩ
Trigger Level	Settable to high TTL, or low TTL, or edge triggered TTL

PROBE POWER (front panel)	
Voltage	+15 V dc, –12.6 V dc
Current	150 mA maximum, each

ManualsPlus.com

EARPHONE	
Connector	1/8 inch miniature monophonic jack, rear panel
Power Output	0.2 W into 4 Ω

(*Option 001 instruments only*)			
Connector	SMA female, rear panel		
Impedance	50 Ω		
Frequency	310.7 MHz		
Frequency Range	**3 dB BW**	**Noise Figure**	**Conversion Gain**
30 Hz to 2.9 GHz	>28 MHz	25 dB	–15 dB
2.9 GHz to 6.5 GHz	>28 MHz	20 dB	–8 dB

ALT SWEEP OUT	
(Option 005 analyzers only)	
Connector	BNC female, rear panel
Impedance	100 Ω

ManualsPlus.com

Regulatory Information

The following information applies to 8561EC spectrum analyzers.

DECLARATION OF CONFORMITY

According to ISO/IEC Guide 22 and CEN/CENELEC EN 45014

Manufacturer's Name: Agilent Technologies, Inc.

Manufacturer's Address: 1400 Fountaingrove Parkway
Santa Rosa, CA 95403-1799
USA

Declares that the products

Product Name: Spectrum Analyzer

Model Number: 8560EC, 8561EC, 8562EC, 8563EC, 8564EC, 8565EC

Product Options: This declaration covers all options of the above products.

Conform to the following product specifications:

EMC: IEC 61326-1:1997+A1:1998 / EN 61326-1:1997+A1:1998

Standard	Limit
CISPR 11:1990 / EN 55011-1991	Group 1, Class A
IEC 61000-4-2:1995+A1998 / EN 61000-4-2:1995	4 kV CD, 8 kV AD
IEC 61000-4-3:1995 / EN 61000-4-3:1995	3 V/m, 80 - 1000 MHz
IEC 61000-4-4:1995 / EN 61000-4-4:1995	0.5 kV sig., 1 kV power
IEC 61000-4-5:1995 / EN 61000-4-5:1996	0.5 kV L-L, 1 kV L-G
IEC 61000-4-6:1996 / EN 61000-4-6:1998	3 V, 0.15 – 80 MHz
IEC 61000-4-11:1994 / EN 61000-4-11:1998	1 cycle, 100%

Safety: IEC 61010-1:1990 + A1:1992 + A2:1995 / EN 61010-1:1993 +A2:1995
CAN/CSA-C22.2 No. 1010.1-92

Supplementary Information:
The products herewith comply with the requirements of the Low Voltage Directive 73/23/EEC and the EMC Directive 89/336/EEC and carry the CE-marking accordingly.

Santa Rosa, CA, USA 18 Jan. 2000

Greg Pfeiffer/Quality Engineering Manager

For further information, please contact your local Agilent Technologies sales office, agent or distributor.

ManualsPlus.com

The following information applies to the Agilent 8561E spectrum analyzer.

DECLARATION OF CONFORMITY

According to ISO/IEC Guide 22 and CEN/CENELEC EN 45014

Manufacturer's Name: Agilent Technologies, Inc.

Manufacturer's Address: 1400 Fountaingrove Parkway
Santa Rosa, CA 95403-1799
USA

Declares that the products

Product Name: Spectrum Analyzer

Model Number: 8560E, 8560EL, 8561E, 8562E, 8562EL, 8563E, 8564E, 8565E

Product Options: This declaration covers all options of the above products.

Conform to the following product specifications:

	Standard	Limit
EMC:	CISPR 11:1990 / EN 55011-1991	Group 1, Class A
	IEC 801-2:1984/EN 50082-1:1992	4 kV CD, 8 kV AD
	IEC 801-3:1984/EN 50082-1:1992	3 V/m, 80 - 1000 MHz
	IEC 801-4:1988/EN 50082-1:1992	0.5 kV sig., 1 kV power

Safety: IEC 61010-1:1990 + A1:1992 + A2:1995 / EN 61010-1:1993 +A2:1995
CAN/CSA-C22.2 No. 1010.1-92

Supplementary Information:
The products herewith comply with the requirements of the Low Voltage Directive 73/23/EEC and the EMC Directive 89/336/EEC and carry the CE-marking accordingly.

Santa Rosa, CA, USA 1 Nov. 2000

Greg Pfeiffer/Quality Engineering Manager

For further information, please contact your local Agilent Technologies sales office, agent or distributor.

ManualsPlus.com

Notice for Germany: Noise Declaration

LpA < 70 dB am Arbeitsplatz (operator position) normaler Betrieb (normal position) nach DIN 45635 T. 19 (per ISO 7779)

CE: European Community

The product design was approved for the European Community.

ISM1-A: Industrial Scientific and Medical Group 1, Class A

The instrument meets the requirements of CISPER 11, Clause 4.

CSA: Canadian Standards Association

The CSA mark is a registered trademark of the Canadian Standards Association. The product meets the requirements.

IEC: International Electrotechnical Commission

This instrument has been designed and tested in accordance with IEC Publication 1010, Safety Requirements for Electronic Measuring Apparatus, and has been supplied in a safe condition. The instruction documentation contains information and warnings which must be followed by the user to ensure safe operation and to maintain the instrument in a safe condition.

This product conforms to Enclosure Protection IP 2 0 according to IEC-529. The enclosure protects against finger access to hazardous parts within the enclosure; the enclosure does not protect against the entrance of water.

ManualsPlus.com

4 8562E/EC Specifications and Characteristics

ManualsPlus.com

Specifications and Characteristics

The following tables list the spectrum analyzer specifications. Unless stated otherwise, all specifications describe the analyzer warranted performance under the following conditions:

- Five-minute warmup for ambient conditions
- Autocoupled controls
- Preselector peaked at the signal of interest
- Digital trace display
- IF ADJ ON
- REF LVL CAL adjusted
- 1ST LO OUTPUT terminated in 50 ohms
- 2ND IF OUTPUT terminated in 50 ohms
- Two-year calibration cycle (See “Calibration Cycle” below.)
- Environmental requirements met

After a 30-minute warmup at a temperature between 20 °C and 30 °C, the preselector does not have to be peaked at each signal of interest. Factory preselector-peak values are sufficient to meet all specifications.

NOTE REF LVL ADJ uses the CAL OUTPUT signal to calibrate the reference level. How often this adjustment should be performed depends on internal temperature changes. Amplitude temperature drift is a nominal 1 dB/10 °C. The nominal temperature drift is 10 °C, most of which occurs during the first 30 minutes after power-on. Internal temperature equilibrium is reached after 2 hours of operation at a stable ambient temperature.

Characteristics provide useful information in the form of typical, nominal, or approximate values for analyzer performance. Tables of the spectrum analyzer characteristics follow the specifications.

ManualsPlus.com

Calibration Cycle

The performance tests located in Chapter 2 should be used every two years to check the analyzer against the specifications listed in this chapter.

The frequency reference needs to be adjusted as well as checked at the same time. Refer to the 10 MHz Frequency Reference Adjustment in the *Agilent 8562E and 8562EC Spectrum Analyzers Service Guide*.

ManualsPlus.com

Frequency Specifications

Frequency Range			
Internal Mixing			
AC Coupled	100 kHz to 13.2 GHz		
DC Coupled	30 Hz to 13.2 GHz		
Internal Mixing Bands	**Frequency Range**	**Harmonic Mixing Mode N***	
Band 0	30 Hz to 2.9 GHz	1–	
Band 1	2.75 GHz to 6.5 GHz	1–	
Band 2	6.5 GHz to 13.2 GHz	2–	
External Mixing	18 GHz to 325 GHz		
Non-Option 327			
External Mixing Bands			
Frequency Band	**Frequency Range**	**Harmonic Mixing Mode (N*)**	
		Preselected	**Unpreselected**
K	18.0 to 26.5	n/a	6–
A	26.5 to 40.0	8+	8–
Q	33.0 to 50.0	10+	10–
U	40.0 to 60.0	10+	10–
V	50.0 to 75.0	14+	14–
E	60.0 to 90.0	n/a	16–
W	75.0 to 110.0	18+	18–
F	90.0 to 140.0	n/a	24–
D	110.0 to 170.0	n/a	30–
G	140.0 to 220.0	n/a	36–
Y	170.0 to 260.0	n/a	44–
J	220.0 to 325.0	n/a	54–

* N is the harmonic mixing mode. For negative mixing modes (as indicated by the "–"), the desired 1st LO harmonic is higher than the tuned frequency by the 1st IF (3.9107 GHz for the 30 Hz to 2.9 GHz band, 310.7 MHz for all other bands). For positive mixing modes, the desired 1st LO harmonic is lower than the tuned frequency by 310.7 MHz.

ManualsPlus.com

Frequency Readout Accuracy	
Accuracy of START, CENTER, STOP or MARKER frequency	
SPAN > 2 MHz × N*	<±(frequency readout × frequency reference accuracy† + 5% of frequency span + 15% of resolution bandwidth + 10 Hz)
SPAN ≤ 2 MHz × N*	<±(frequency readout × frequency reference accuracy† + 1% of frequency span + 15% of resolution bandwidth + 10 Hz)

* N is the harmonic mixing mode.

† frequency reference accuracy = (aging × period of time since adjustment) + initial achievable accuracy + temperature stability.

Frequency Count Marker	
Frequency Count Marker Resolution	Selectable from 1 Hz to 1 MHz
Frequency Count Marker Accuracy (for signal-to-noise ratio ≥25 dB)	<±(marker frequency × frequency reference accuracy‡ + 2 Hz × N† + 1 LSD)
Delta Frequency Count Accuracy (for signal-to-noise ratio ≥25 dB)	<±(delta frequency × frequency reference accuracy‡ + 4 Hz × N† + 2 LSD)

† N is the harmonic mixing mode.

‡ Frequency Reference Accuracy = (aging × period of time since adjustment + initial achievable accuracy + temperature stability).

ManualsPlus.com

Frequency Reference Accuracy	
Non-Option 103	
Aging	$<\pm 0.5 \times 10^{-9}$/day (after 7 day warmup)
	$<\pm 1 \times 10^{-7}$/year
Temperature Stability	$<\pm 1 \times 10^{-8}$, –10 °C to +55 °C, referenced to 25 °C
Option 103	
Aging	$<\pm 2 \times 10^{-6}$/year
Settability	$<\pm 1 \times 10^{-6}$
Temperature Stability	$<\pm 1 \times 10^{-6}$, –10 °C to +55 °C, referenced to 25 °C

ManualsPlus.com

Stability		
Residual FM		
(zero span, 10 Hz RES BW)		
Non-Option 103	< 1.0 Hz × N* peak-to-peak in 20 ms†	
Option 103	< 10 Hz × N* peak-to-peak in 20 ms	
Noise Sidebands		
For Frequencies ≤1 GHz		
(Refer to the characteristics section for frequencies > 2.9 GHz)		
Offset	**Non-Option 103**	**Option 103**
100 Hz	<–88 dBc/Hz‡	<–70 dBc/Hz‡
1 kHz	<–97 dBc/Hz‡	<–90 dBc/Hz‡
10 kHz††	<–113 dBc/Hz§	<–113 dBc/Hz§
30 kHz††	<–113 dBc/Hz#	<–113 dBc/Hz#
100 kHz‡‡	<–117 dBc/Hz**	<–117 dBc/Hz**

* N is the harmonic mixing mode.

† See Resolution Bandwidth Usability in “Frequency Characteristics” for further information.

‡ Add 5.2 dB × (f/1 GHz) –1) for f > 1 GHz and f ≤ 2.9 GHz.

§ Add 2.5 dB × (f/1 GHz) –1) for f > 1 GHz and f ≤ 2.9 GHz.

#Add 3.0 dB × (f/1 GHz) –1) for f > 1 GHz and f ≤ 2.9 GHz.

**Add 2.0 dB for frequencies > 1 GHz and ≤ 2.9 GHz

†† For resolution bandwidth ≤ 1 kHz or frequency span ≤ 745 kHz.

‡‡ For resolution bandwidth ≥ 3 kHz or frequency span > 745 kHz.

ManualsPlus.com

Frequency Span	
Range	
Internal Mixing	0 Hz, 100 Hz to 13.2 GHz over the 10-division display horizontal axis, variable in approximately 1% increments, or in a 1, 2, 5 sequence.
External Mixing†	Minimum span = 100 Hz × N*
Accuracy	
SPAN > 2 MHz × N*	<±5%
SPAN ≤ 2 MHz × N*	<±1%

* N is the harmonic mixing mode.

† Resolution bandwidths ≤100 Hz are not available in external mixing. External mixing is not available for Option 002 or Option 327.

ManualsPlus.com

Resolution Bandwidths (–3 dB)	
Range*	
Non-Option 103	1 Hz to 1 MHz (selectable in a 1, 3, 10 sequence) and 2 MHz (3 MHz at –6 dB)
Option 103	10 Hz to 1 MHz (selectable in a 1, 3, 10 sequence) and 2 MHz (3 MHz at –6 dB)
Accuracy	
1 Hz to 300 kHz RES BW	<±10%
1 MHz RES BW	<±25%
2 MHz RES BW	<+50%, –25%
Selectivity (60 dB/3 dB bandwidth ratio)	
RES BW ≥300 Hz	<15:1
RES BW ≤100 Hz	<5:1
Bandwidth Shape	
1 and 2 MHz RES BW	Approximately Gaussian
300 Hz to 300 kHz RES BW	Synchronously tuned, 4-pole filters
1 Hz to 100 Hz RES BW	Digital, approximately Gaussian
* Resolution bandwidths ≤100 Hz are not available in external mixing.	

Video Bandwidth	
(Post-detection low-pass filter averages displayed noise for a smooth trace.)*	
Range	1 Hz to 3 MHz† in a 1, 3, 10 sequence
* Video bandwidth filtering is not available in resolution bandwidths ≤ 100 Hz when SPAN 0 Hz with firmware revisions 930809 and earlier. † The video bandwidth upper limit is 450 kHz in sample detection mode.	

ManualsPlus.com

Sweep

Sweep Time	
Range	
Span = 0	
Non-Option 007 (E-Series)	
Analog display	50 µs to <30 ms
Digital display	30 ms to 6,000 s
Option 007 E-Series and all EC-Series instruments	
Digital display	50 µs to 6,000 s
Span ≥ 100 Hz	
RES BW ≥300 Hz	50 ms to 2,000 s
RES BW ≤100 Hz	50 ms to 100,000 s (span-dependent)
Accuracy (Span = 0 Hz)	
Non-Option 007 E-Series	
Sweep time 30 ms to 6,000 s	<±1%
Sweep time <30 ms	<±10%
Option 007 E-Series and all EC-Series instruments	
Sweep time 30 ms to 6,000 s	<±1%
Sweep time <30 ms	<±0.1%
Sweep Trigger	Delayed, Free Run, Single, Line, External, or Video#
# Video trigger is not available in RES BW settings ≤100 Hz.	

ManualsPlus.com

Delayed Sweep	
Trigger Modes	Free Run, Line, External, Video*
Range	
Span = 0	
Non-Option 007 (E-Series)	+2 µs to +65.535 ms
Option 007 E-Series and all EC-Series instruments	
Sweep time ≥ 30 ms	+2 µs to +65.535 ms
Sweep time < 30 ms	–9.9 ms to +65.535 ms[††]
Span ≥ 100 Hz	+2 µs to +65.535 ms
Resolution	1 µs
Accuracy[#]	±1 µs

* Video trigger is not available in RES BW settings ≤ 100 Hz.

[††] Negative delayed sweep (pre-trigger) is also limited to 50 × sweep time.

[#] In E-Series instruments without Option 007, the delay time will be subject to up to ±0.5 µs of jitter due to synchronization of the input edge trigger to the internal 1 MHz timebase. In E-series instruments with Option 007 and in EC-instruments using sweeptimes <30 ms, the delay time will experience up to ±83 ns of jitter due to synchronization of the input edge trigger to the internal 12 MHz timebase.

ManualsPlus.com

Time-Gated Spectrum Analysis

Gate Delay*	**Edge Mode**	**Level Mode**
Range	3 µs to 65.535 ms	≤0.5 µs
Resolution	1 µs	
Accuracy†	<±1 µs	

* Time from GATE TRIGGER INPUT to positive edge of GATE OUTPUT.

† The gate delay time will experience up to ±0.5 µs of jitter due to synchronization of the input edge trigger to the internal 1 MHz timebase.

Gate Length*	
Range	1 µs to 65.535 ms
Resolution	1 µs
Accuracy	<±1 µs

* Time from positive edge to negative edge of GATE OUTPUT.

Marker Frequency Resolution	SPAN/600 to a minimum of 1 Hz

Marker Time Resolution	Sweep time/600

ManualsPlus.com

Amplitude Specifications

Measurement Range

Maximum Safe Input Power	
Average Continuous Power (input attenuation ≥10 dB)	+30 dBm (1 W)
Peak Pulse Power (input attenuation ≥30 dB)	+50 dBm (100 W) for pulse widths ≤10 µs and <1% duty cycle.
DC Voltage	
AC Coupled	<±50 V
DC Coupled	<±0.2 V

Gain Compression	
10 MHz to 2.9 GHz (≤–5 dBm at input mixer‡)	<1.0 dB
2.9 GHz to 6.46 GHz (≤0 dBm at input mixer†)	<1.0 dB
6.46 GHz to 13.2 GHz (≤–3 dBm at input mixer)†	<1.0 dB

‡ Mixer level = input level – input attenuation.

ManualsPlus.com

Displayed Average Noise Level With no signal at input, 1 Hz video bandwidth, and 0 dB input attenuation, tracking generator off.		
Frequency Range	**10 Hz RES BW** *(Option 103)*	**1 Hz RES BW** *(Non-Option 103)*
30 Hz	<–80 dBm	<–90 dBm
1 kHz	<–95 dBm	<–105 dBm
10 kHz	<–110 dBm	<–120 dBm
100 kHz	<–110 dBm	<–120 dBm
1 MHz to 10 MHz	<–130 dBm	<–140 dBm
10 MHz to 2.9 GHz	<–141 dBm	<–151 dBm
2.9 GHz to 6.5 GHz	<–138 dBm	<–148 dBm
6.46 GHz to 13.2 GHz	<–135 dBm	<–145 dBm

ManualsPlus.com

Spurious Responses		
All input-related spurious responses, except as noted below.	**Mixer Level***	**Distortion**
10 MHz to 13.2 GHz	–40 dBm	<(–75 + 20 log N†) dBc
Second Harmonic Distortion		
Applied Signal Frequency Range		
1 MHz to 1.45 GHz	–40 dBm	<–72 dBc
1.45 Hz to 2.0 GHz	–10 dBm	<–72 dBc
2.0 Hz to 6.6 GHz	–10 dBm	<–72 dBc
Third Order Intermodulation Distortion		
(with two signals at input mixer, spaced ≥1 kHz apart)		
Frequency Range		
20 MHz to 2.9 GHz	–30 dBm each	<–78 dBc
2.9 GHz to 6.46 GHz	–30 dBm each	<–90 dBc
6.46 GHz to 13.2 GHz	–30 dBm each	<–90 dBc
Image, Multiple Responses, and Out of Range Responses		
Frequency Range		
10 MHz to 6.5 GHz	–10 dBm	<–80 dBc

* Mixer Level = input level – input attenuation

† N = harmonic mixing number

Residual Responses	
>200 kHz with no signal at input, 0 dB input attenuation, N† 1	<–90 dBm

† N harmonic mixing number

ManualsPlus.com

Display Range

Amplitude Scale	10 vertical display divisions, with the reference level (0 dB) at the top graticule line.

Calibration	
LOG	10 dB/DIV for 100 dB display from reference level.*
	5 dB/DIV for 50 dB display expanded from reference level.†
	2 dB/DIV for 20 dB display expanded from reference level.
	1 dB/DIV for 10 dB display expanded from reference level.†
LINEAR	10% of reference level per division over the top nine divisions
	(all 10 divisions for RES BW ≤100 Hz) when calibrated in voltage.

* 10 dB/DIV for 70 dB display from reference level for RES BW ≤100 Hz when SPAN = 0 Hz.

† In E-Series instruments without Option 007 these scales are not available for sweep times < 30 ms.

Accuracy

Reference Level Range	
LOG, adjustable in 0.1 dB steps	–120 dBm to +30 dBm
LINEAR, settable in 1% steps	2.2 µV to 7.07 V

ManualsPlus.com

Reference Level Uncertainty

Frequency Response		
(with 10 dB input attenuation)		**Typical**
Relative (referenced to midpoint between highest and lowest peak excursions)		(20 °C to 30 °C)
DC Coupled		
30 Hz to 2.9 GHz	<±1.25 dB	<±0.8 dB
100 MHz to 2.3 GHz	<±0.9 dB	<±0.8 dB
2.9 GHz to 6.46 GHz	<±1.5 dB	<±1.1 dB
6.46 GHz to 13.2 GHz	<±2.2 dB	<±1.5 dB
AC Coupled		
100 kHz to 2.9 GHz	<±1.25 dB	<±0.8 dB
2.9 GHz to 6.5 GHz	<±2.0 dB	<±1.0 dB
6.46 GHz to 13.2 GHz	<±2.2 dB	<±1.5 dB
Absolute (referenced to 300 MHz CAL OUTPUT)		
DC Coupled		
30 Hz to 2.9 GHz	<±1.80 dB	<±1.0 dB
2.9 GHz to 6.46 GHz	<±2.5 dB	<±1.5 dB
6.46 GHz to 13.2 GHz	<±2.9 dB	<±2.0 dB
AC Coupled		
100 kHz to 2.9 GHz	<±1.9 dB	<±1.2 dB
2.9 GHz to 6.46 GHz	<±3.0 dB	<±1.5 dB
6.46 GHz to 13.2 GHz	<±3.0 dB	<±2.0 dB

Band Switching Uncertainty	
(Additional uncertainty added to Relative Frequency Response for measurements between any two bands)	<±1.0 dB

Calibrator Uncertainty	
–10 dBm, 300 MHz	<±0.3 dB

ManualsPlus.com

Input Attenuator Switching Uncertainty (20 to 70 dB settings, referenced to 10 dB input attenuation) 30 Hz to 2.9 GHz	<±0.6 dB/10 dB step, 1.8 dB max.

IF Gain Uncertainty (0 dBm to –80 dBm reference levels with 10 dB input attenuation)	<±1.0 dB

Resolution Bandwidth Switching Uncertainty (Referenced to 300 kHz resolution bandwidth at the reference level.)*	<±0.5 dB
* Scale fidelity is not the same for RES BW ≤100 Hz as for RES BW ≥300 Hz. Therefore, signals not at the reference level will experience an additional amplitude difference when switching between these two sets of RES BW settings, due to differences in scale fidelity.	

ManualsPlus.com

Pulse Digitization Uncertainty	
(Pulse response mode, PRF >720/sweep time)	
LOG	
Resolution Bandwidth ≤ 1 MHz	<1.25 dB peak-to-peak
Resolution Bandwidth = 2 MHz	<3 dB peak-to-peak
LINEAR	
Resolution Bandwidth ≤ 1 MHz	<4% of reference level peak-to-peak
Resolution Bandwidth = 2 MHz	<12% of reference level peak-to-peak

IF Alignment Uncertainty	
(additional uncertainty when using 300 Hz RES BW only)	<±0.5 dB

ManualsPlus.com

Scale Fidelity*	
LOG	
Incremental	
0 to –90 dB range†	
RES BW ≥ 300 Hz	<±0.1 dB/dB
RES BW ≤ 100 Hz	<±0.2 dB/2 dB
Cumulative	
0 to –90 dB range†	
RES BW ≥ 300 Hz	<±0.1 dB/dB from the reference level to a maximum of ±0.85 dB
RES BW ≤ 100 Hz	<±0.2 dB/2 dB from the reference level to a maximum of ±0.85 dB
0 to –100 dB range†	
RES BW ≥ 300 Hz	±2.5 dB *characteristic*
RES BW ≤ 100 Hz	maximum of ±1.5 dB
LINEAR	<±3% of reference level

* Scale fidelity is not the same for RES BW ≤100 Hz as for RES BW ≥ 300 Hz. Therefore, signals not at the reference level will experience an additional amplitude difference when switching between these two sets of RES BW settings due to the differences in scale fidelity.

† 0 to –70 dB range for RES BW ≤100 Hz when SPAN = 0 Hz.

Marker Amplitude Resolution*		
	(Sweep time ≥ 30 ms)	
Scale:	LOG 10 dB/DIV	(1/6) dB
	LOG 5 dB/DIV	(1/12) dB
	LOG 2 dB/DIV	(1/30) dB
	LOG 1 dB/DIV	(1/60) dB
	LINEAR	Reference Level/600

* In E-Series instruments markers are not available for sweep times < 30 ms with RES BW ≥ 300 Hz without Option 007. For Option 007, see the characteristics section.

ManualsPlus.com

Inputs and Outputs Specifications

CAUTION Any electrostatic discharge according to IEC 801-2/1991 to the center pins of any of the connectors may cause damage to the associated circuitry.

IF INPUT *(Deleted on and Option 327)*	
Connector	SMA female, front panel
Input level for full-screen deflections (external mixing mode, 0 dBm reference level, 30 dB conversion loss)	–30 dBm ± 1.5 dB

GPIB	
Connector	IEEE-488 bus connector
Interface Functions	SH1, AH1, T6, TE0, L4, LE0, SR1, RL1, PP1, DC1, DT1, C1, C28
Direct Plotter Output	Supports Agilent 7225A, Agilent 7440A, Agilent 7470A, Agilent 7475A, Agilent 7550A
Direct Printer Output	Supports HP 3630A PaintJet, HP 2225A ThinkJet

CAL OUTPUT	
Connector	BNC female, front panel
Frequency	300 MHz ±(300 MHz × frequency reference accuracy†)
Amplitude	–10 dBm ±0.3 dB

† Frequency Reference Accuracy = (aging × period of time since adjustment + initial achievable accuracy + temperature stability).

1ST LO OUTPUT	
Connector	SMA female, front panel
Amplitude	+16.5 dBm ±2.0 dB

10 MHz REF IN/OUT	
Connector	BNC female, rear panel
Output Frequency	10 MHz ±(10 MHz × frequency reference accuracy†)

† Frequency Reference Accuracy = (aging × period of time since adjustment + initial achievable accuracy + temperature stability).

ManualsPlus.com

General Specifications

Environmental Specifications	
Military Specification per MIL-T-28800, Type III, Class 3, Style B (EC)/ Style C (EC), as follows:	
Calibration Interval	2 years
Warmup	5 minutes from ambient conditions*
Temperature	
Operating	–10 °C to +55 °C (E) / 0 °C to +55 °C (EC)
Non-operating	–51 °C to +71 °C
Humidity	95% at 40 °C for 5 days
Altitude	
Operating	15,000 feet
Non-operating	50,000 feet
Rain resistance	Drip-proof at 16 liters/hour/square foot
Vibration	
5 to 15 Hz	0.060 inch peak-to-peak excursion
16 to 25 Hz	0.040 inch peak-to-peak excursion
26 to 55 Hz	0.020 inch peak-to-peak excursion
Pulse Shock	
Half Sine	30 g for 11 ms duration
Transit Drop	8 inch drop on 6 faces and 8 corners
Power Main	Voltage fluctuations within the range specified in the spectrum analyzer “Power Requirements.”
Power Main	Operating environment within the limits of installation category II according to IEC 1010.
Pollution	Operating environment within the limits of pollution degree 2 according to IEC 664.

* Two hours for conditions of internal condensation, 30 minutes to meet frequency response specifications without preselector peaking. When operating outside the 20 °C to 30 °C ambient temperature range, preselector peaking is always required to meet frequency response specifications.

ManualsPlus.com

Electromagnetic Compatibility	
	Conducted and radiated interference is in compliance with CISPR, Publication 11 (1990).
Military Specification	Meets the requirements of MIL-STD-461C, Part 2, with the exceptions shown below:
Conducted Emissions	
CE01 (Narrowband)	1 kHz to 15 kHz only
CE03 (Narrowband)	Full limits
CE03 (Broadband)	20 dB relaxation from 15 kHz to 100 kHz
Conducted Susceptibility	
CS01	Full Limits
CS02	Full Limits with 40 dB relaxation at IF frequencies. Refer also to “Radiated Immunity” in Amplitude Characteristics.
CS06	Full Limits
Radiated Emissions	
RE01	Test probe at 15 cm, front and rear panel search excluded.
RE02	Full limits to 1 GHz
Radiated Susceptibility	
RS03	Limited to 3 V/m from 14 kHz to 1 GHz with 40 dB relaxation at IF frequencies. Refer also to “Radiated Immunity” in Amplitude Characteristics.

ManualsPlus.com

Power Requirements	
115 Vac Operation	
Voltage	90 V to 140 V rms
Current	3.2 A rms maximum
Frequency	47 Hz to 440 Hz
230 Vac Operation	
Voltage	180 V to 250 V rms
Current	1.8 A rms maximum
Frequency	47 Hz to 66 Hz
Maximum Power Dissipation	180 W

Audible Noise	<5.0 Bels, 20 °C to 30 °C (ISO DP7779)

Weight	20 kg (44 lb)

ManualsPlus.com

Dimensions

With Handle and Front Cover:

(A) 202 mm (7-15/16 in) high

(C) 366 mm (14-7/16 in) wide

(F) 503 mm (19-13/16 in) deep

Without Handle and Front Cover:

(B) 187 mm (7-3/8 in) high

(D) 337 mm (13-1/4 in) wide

(E) 461 mm (18-1/8 in) deep

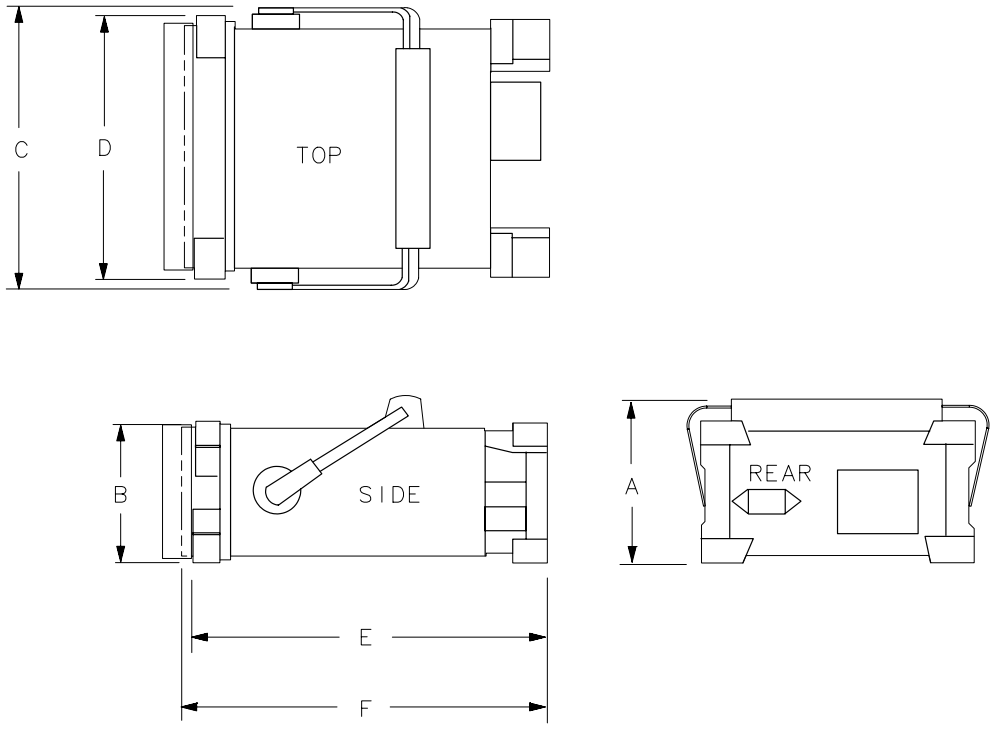

ManualsPlus.com

Frequency Characteristics

These are not specifications. Characteristics provide useful information about instrument performance.

Frequency Reference Accuracy	
Non-Option 103	
Initial Achievable Accuracy	$<\pm 2.2 \times 10^{-8}$
(includes gravitational sensitivity, retrace, and settability)	
Daily Aging (average over 7 days after being powered on for 7 days)	$<\pm 5 \times 10^{-10}$
Warmup	
(Internal frequency reference selected)	
After 5 minutes	$<\pm 1 \times 10^{-7}$ of final frequency* (0 °C to +55 °C) $<\pm 1 \times 10^{-6}$ of final frequency* (–10 °C)
After 15 minutes	$<\pm 1 \times 10^{-8}$ of final frequency* (–10 °C to +55 °C)
Option 103	
Initial Achievable Accuracy	$<\pm 1 \times 10^{-6}$
* Final frequency is defined as frequency 60 minutes after power-on with analyzer set to internal frequency reference.	

Bandwidth Selectivity	
RES BW ≤100 Hz	<4.5:1
RES BW = 1 MHz	<8:1
RES BW = 2 MHz	<5.5:1

ManualsPlus.com

Impulse Bandwidth	
RES BW 2 MHz	2.93 MHz ±10%
RES BW 1 MHz	1.60 MHz ±7%
RES BW 300 kHz	491 kHz ±7%
300 Hz ≤ RES BW ≤ 100 kHz	1.62 × RES BW ± 10%

Stability	
Noise Sidebands	
For frequencies ≤ 1 GHz, 100 kHz offset from carrier, and frequency span > 2 MHz	≤121 dBc/Hz

ManualsPlus.com

Figure 4-1 Noise Sidebands Normalized to 1 Hz BW vs. Offset from Carrier

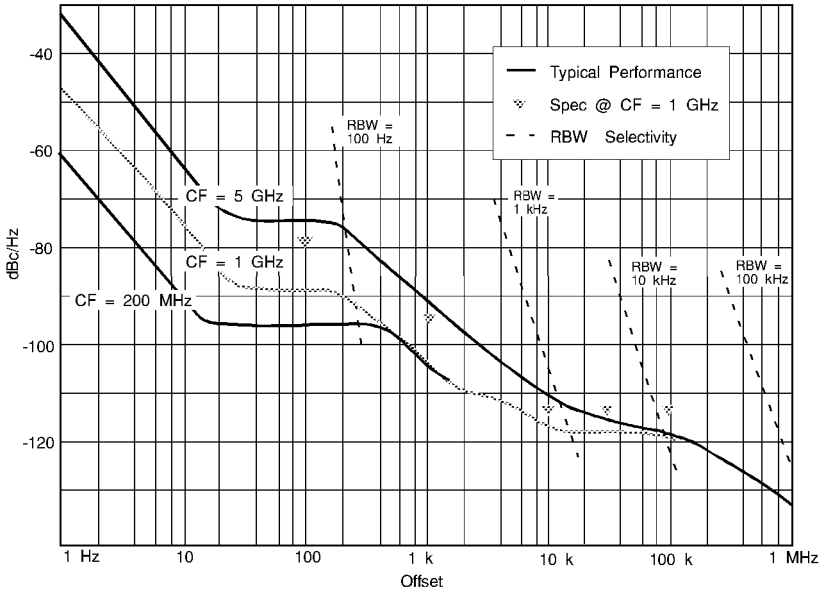

Figure 4-2 Typical On-Screen Dynamic Range vs. Offset from 1 GHz Center Freq. for all RBW's

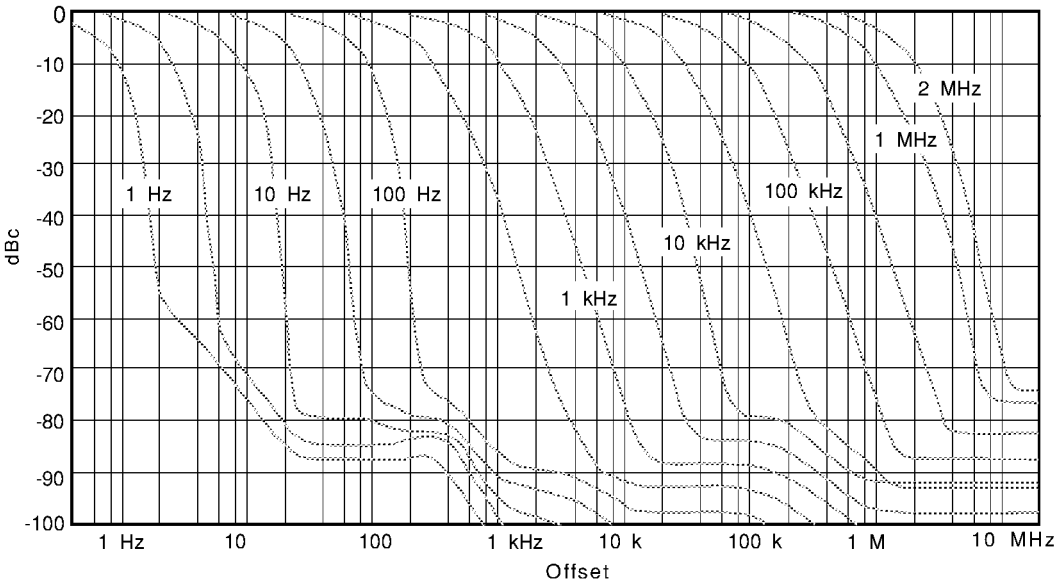

ManualsPlus.com

Sweep

Sweep Time Accuracy	
Span ≥100 Hz	<±15%

Resolution Bandwidth Usability* ***(Non-Option 103)***			
RES BW	**Maximum Usable Frequency**		
	Video Average OFF	**Video Average ON, 10 Video Averages**	
		Source/Spectrum Analyzer Frequency References	
		Locked†	**Independent‡**
≥30 Hz	>13.2 GHz	>13.2 GHz	>13.2 GHz
10 Hz	>13.2 GHz	>13.2 GHz	>13.2 GHz
3 Hz	>13.2 GHz	>13.2 GHz	2 GHz
1 Hz	>13.2 GHz	>13.2 GHz	200 MHz

* Resolution Bandwidth Usability is the maximum usable frequency for a given resolution bandwidth. The maximum usable frequency is limited by signal instability resulting from spectrum analyzer residual FM during the measurement interval. Measurements at frequencies less than the maximum usable frequency will have a typical amplitude uncertainty of less than 1 dB. These characteristics apply after a 30 minute warmup.

† Source and spectrum analyzer share the same frequency reference.

‡ Source and spectrum analyzer do not share the same frequency reference.

ManualsPlus.com

Amplitude Characteristics

Dynamic Range

Figure 4-3 **Nominal Dynamic Range**

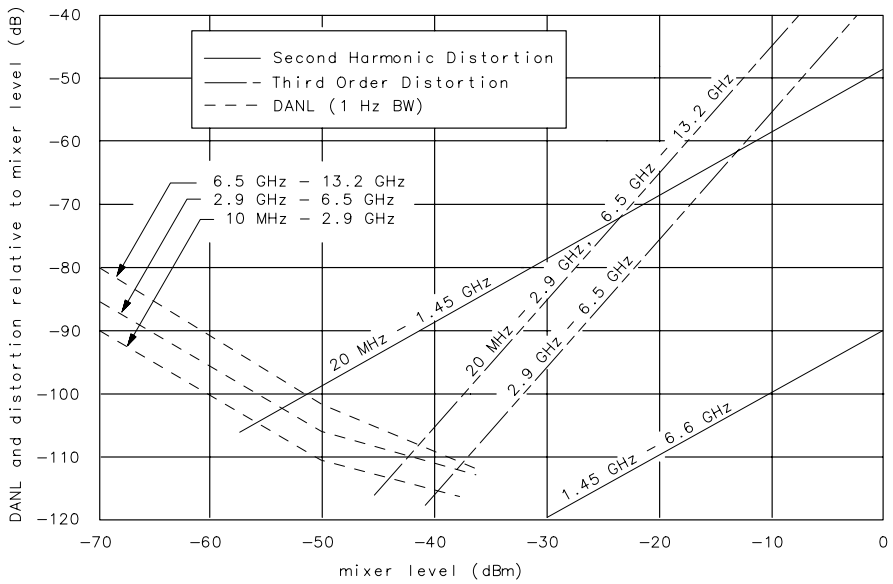

wj11e

Amplitude Measurement Range

Spurious Responses	Frequency Range	Distortion
(all input related spurious responses <1 kHz from the carrier)	10 MHz to 2.9 GHz	<–55 dBc

ManualsPlus.com

Amplitude Accuracy

Band-to-Band Frequency Response (dB)

Frequency response uncertainty for measurements between any two internal mixing bands. Equivalent to the sum of the two Relative Frequency Response values plus Band Switching Uncertainty.

Band 0. 30 Hz to 2.9 GHz

Band 1. 2.9 GHz to 6.46 GHz

Band 2. 6.46 GHz to 13.2 GHz

Band-to-Band Frequency Response, DC-Coupled (dB peak-to-peak)

	Band 0	**Band 1**	**Band 2**
Band 0	n/a	3.75 dB	4.45 dB
Band 1	3.75 dB	n/a	4.7 dB
Band 2	4.45 dB	4.7 dB	n/a

Band-to-Band Frequency Response, AC-Coupled (dB peak-to-peak)

	Band 0	**Band 1**	**Band 2**
Band 0	n/a	4.25 dB	4.45 dB
Band 1	4.25 dB	n/a	5.2 dB
Band 2	4.45 dB	5.2 dB	n/a

Input Attenuator Repeatability	<±0.2 dB

Input Attenuator Accuracy	
2.9 GHz to 13.2 GHz	<±1.5 dB/10 dB step, ±3.0 dB max.

Pulse Digitization Uncertainty	
(Pulse response mode, PRF >720/sweep time)	
Standard Deviation	<0.2 dB

ManualsPlus.com

Marker Amplitude Resolution		
(EC-Series instruments and E-Series with Option 007, sweep time < 30 ms, zero span)		
Scale:	LOG 10 dB/DIV	≤ (1/2) dB
	LOG 5 dB/DIV	≤ (1/4) dB
	LOG 2 dB/DIV	≤ (1/10) dB
	LOG 1 dB/DIV	≤ (1/20) dB
	LINEAR	≤ Reference Level/200

Demodulation

Spectrum Demodulation	
Modulation Type	AM and FM (5 kHz peak deviation)
Audio Output	Internal speaker and phone jack with volume control.
Pause Time at Marker Frequency	100 ms to 60 s

Radiated Immunity

Radiated Immunity
When tested at 3 V/m according to IEC 801-3/1984 the displayed average noise level will be within specifications over the full immunity test frequency range of 27 to 500 MHz except that at the immunity test frequency of 310.7 MHz ± selected resolution bandwidth the displayed average noise level may be up to –80 dBm. When the analyzer tuned frequency is identical to the immunity test signal frequency there may be signals of up to –90 dBm displayed on the screen.

ManualsPlus.com

Inputs and Outputs Characteristics

CAUTION Any electrostatic discharge according to IEC 801-2/1991 to the center pins of any of the connectors may cause damage to the associated circuitry.

INPUT 50Ω	
Connector	Precision Type N female, front panel
Impedance	50 Ω
VSWR (at tuned frequency)	
	<1.5:1 for ≥10 dB Input Attenuation
	<3.0:1 for 0 dB Input Attenuation
LO Emission Level* (average)	
10 dB Input Attenuation	<–80 dBm
* Level of 1st LO, 3.0 to 6.8 GHz, present at INPUT 50Ω connector.	

IF INPUT *(Deleted on Option 002 and Option 327)*	
(2nd IF input for use with external mixers)	
Connector	SMA female, front panel
Impedance (dc coupled)	50 Ω
Frequency	310.7 MHz
Noise Figure	7 dB
1 dB Gain Compression Level	–23 dBm
Full Screen Level	–30 dBm
(Gain Compression and Full Screen Levels apply with 30 dB conversion loss setting and 0 dBm reference level.)	

1ST LO OUTPUT	
Connector	SMA female, front panel
Impedance	50 Ω
Frequency Range	3.0000 GHz to 6.8107 GHz†
† 3.8107 GHz to 6.8107 GHz for analyzers equipped with Option 002.	

ManualsPlus.com

CAL OUTPUT	
Connector	BNC female, front panel
Impedance	50 Ω

10 MHz REF IN/OUT	
Connector	BNC female, rear panel
Impedance	50 Ω
Output Amplitude	0 dBm
Input Frequency	10 MHz × $(1 \pm 2 \times 10^{-5})$
Input Amplitude	–2 to +10 dBm
External Reference Phase Noise	
Analyzer noise sideband performance will not be degraded if the external reference phase noise is within the limits given below.	
Non-Option 103	<–135 dBc/Hz at 100 Hz offset
Option 103	<–110 dBc/Hz at 100 Hz offset

VIDEO OUTPUT* *(Deleted on Option 327)*	
Connector	BNC female, rear panel
Impedance (dc coupled)	50 Ω
Amplitude (RES BW ≥300 Hz)	0 to +1 V full scale
Scaling	
RES BW ≥300 Hz	linear or log 100 dB/V
RES BW ≤100 Hz	4.8 kHz, auto-ranged level with dc offset

* The VIDEO OUTPUT is a video signal for RES BW ≥300 Hz with switching transients and IF ADJ signals between sweeps. For RES BW ≤100 Hz the output is an IF signal with transients and IF ADJ signals between and during sweeps.

ManualsPlus.com

LO SWP|FAV OUTPUT and	
LO SWP|0.5 V/GHz OUTPUT*	
Connector	BNC female, rear panel
Impedance (dc coupled)	120 Ω
LO SWP OUTPUT (no load)	0 to + 10 V
0.5 V/GHz OUTPUT	
Internal Mixer Mode	0.5 V/GHz of tuned frequency (no load)
External Mixer Mode	([(1.5 V/GHz) × LO frequency)] – 0.2054 V) ±50 mV
0.25 V/GHz OUTPUT†	0.25 V/GHz of tuned frequency (no load)

* This connector is labeled `LO SWP|0.5 V/GHz OUTPUT` on older spectrum analyzers and `LO SWP|FAV OUTPUT` on newer spectrum analyzers.

† The 0.25 V/GHz output is available only in the 8564E and 8565E.

BLKG/GATE OUTPUT	
Connector	BNC female, rear panel
Impedance	50 Ω
Blanking Mode	
Amplitude during sweep	Low TTL Level
Amplitude during retrace	High TTL Level
Gate Mode	
Gate On	High TTL level
Gate Off	Low TTL level

EXT/GATE TRIG INPUT	
Connector	BNC female, rear panel
Impedance	10 kΩ
Trigger Level	Settable to high TTL, or low TTL, or edge triggered TTL

PROBE POWER (front panel)	
Voltage	+15 V dc, –12.6 V dc
Current	150 mA maximum, each

ManualsPlus.com

EARPHONE	
Connector	1/8 inch miniature monophonic jack, rear panel
Power Output	0.2 W into 4 Ω

2ND IF OUT			
(*Option 001 instruments only*)			
Connector	SMA female, rear panel		
Impedance	50 Ω		
Frequency	310.7 MHz		
Frequency Range	**3 dB BW**	**Noise Figure**	**Conversion Gain**
30 Hz to 2.9 GHz	>28 MHz	20 dB	–8 dB
2.9 GHz to 6.5 GHz	>30 MHz	22 dB	–12 dB
6.5 GHz to 13.2 GHz	>30 MHz	26 dB	–16 dB

ALT SWEEP OUT	
(Option 005 analyzers only)	
Connector	BNC female, rear panel
Impedance	100 Ω

ManualsPlus.com

Regulatory Information

The following information applies to the 8562EC spectrum analyzer.

DECLARATION OF CONFORMITY

According to ISO/IEC Guide 22 and CEN/CENELEC EN 45014

Manufacturer's Name: Agilent Technologies, Inc.

Manufacturer's Address: 1400 Fountaingrove Parkway
Santa Rosa, CA 95403-1799
USA

Declares that the products

Product Name: Spectrum Analyzer

Model Number: 8560EC, 8561EC, 8562EC, 8563EC, 8564EC, 8565EC

Product Options: This declaration covers all options of the above products.

Conform to the following product specifications:

EMC: IEC 61326-1:1997+A1:1998 / EN 61326-1:1997+A1:1998

Standard	Limit
CISPR 11:1990 / EN 55011-1991	Group 1, Class A
IEC 61000-4-2:1995+A1998 / EN 61000-4-2:1995	4 kV CD, 8 kV AD
IEC 61000-4-3:1995 / EN 61000-4-3:1995	3 V/m, 80 - 1000 MHz
IEC 61000-4-4:1995 / EN 61000-4-4:1995	0.5 kV sig., 1 kV power
IEC 61000-4-5:1995 / EN 61000-4-5:1996	0.5 kV L-L, 1 kV L-G
IEC 61000-4-6:1996 / EN 61000-4-6:1998	3 V, 0.15 – 80 MHz
IEC 61000-4-11:1994 / EN 61000-4-11:1998	1 cycle, 100%

Safety: IEC 61010-1:1990 + A1:1992 + A2:1995 / EN 61010-1:1993 +A2:1995
CAN/CSA-C22.2 No. 1010.1-92

Supplementary Information:
The products herewith comply with the requirements of the Low Voltage Directive 73/23/EEC and the EMC Directive 89/336/EEC and carry the CE-marking accordingly.

Santa Rosa, CA, USA 18 Jan. 2000

Greg Pfeiffer/Quality Engineering Manager

For further information, please contact your local Agilent Technologies sales office, agent or distributor.

ManualsPlus.com

The following information applies to the 8562E spectrum analyzer.

DECLARATION OF CONFORMITY

According to ISO/IEC Guide 22 and CEN/CENELEC EN 45014

Manufacturer's Name: Agilent Technologies, Inc.

Manufacturer's Address: 1400 Fountaingrove Parkway
Santa Rosa, CA 95403-1799
USA

Declares that the products

Product Name: Spectrum Analyzer

Model Number: 8560E, 8560EL, 8561E, 8562E, 8562EL, 8563E, 8564E, 8565E

Product Options: This declaration covers all options of the above products.

Conform to the following product specifications:

	Standard	Limit
EMC:	CISPR 11:1990 / EN 55011-1991	Group 1, Class A
	IEC 801-2:1984/EN 50082-1:1992	4 kV CD, 8 kV AD
	IEC 801-3:1984/EN 50082-1:1992	3 V/m, 80 - 1000 MHz
	IEC 801-4:1988/EN 50082-1:1992	0.5 kV sig., 1 kV power

Safety: IEC 61010-1:1990 + A1:1992 + A2:1995 / EN 61010-1:1993 +A2:1995
CAN/CSA-C22.2 No. 1010.1-92

Supplementary Information:
The products herewith comply with the requirements of the Low Voltage Directive 73/23/EEC and the EMC Directive 89/336/EEC and carry the CE-marking accordingly.

Santa Rosa, CA, USA 1 Nov. 2000

Greg Pfeiffer/Quality Engineering Manager

For further information, please contact your local Agilent Technologies sales office, agent or distributor.

ManualsPlus.com

Notice for Germany: Noise Declaration

LpA < 70 dB am Arbeitsplatz (operator position) normaler Betrieb (normal position) nach DIN 45635 T. 19 (per ISO 7779)

CE: European Community

The product design was approved for the European Community.

ISM1-A: Industrial Scientific and Medical Group 1, Class A

The instrument meets the requirements of CISPER 11, Clause 4.

CSA: Canadian Standards Association

The CSA mark is a registered trademark of the Canadian Standards Association. The product meets the requirements.

IEC: International Electrotechnical Commission

This instrument has been designed and tested in accordance with IEC Publication 1010, Safety Requirements for Electronic Measuring Apparatus, and has been supplied in a safe condition. The instruction documentation contains information and warnings which must be followed by the user to ensure safe operation and to maintain the instrument in a safe condition.

This product conforms to Enclosure Protection IP 2 0 according to IEC-529. The enclosure protects against finger access to hazardous parts within the enclosure; the enclosure does not protect against the entrance of water.

ManualsPlus.com

ManualsPlus.com

5 8563E/EC Specifications and Characteristics

ManualsPlus.com

Specifications and Characteristics

The following tables list the spectrum analyzer specifications. Unless stated otherwise, all specifications describe the analyzer warranted performance under the following conditions:

- Five-minute warmup for ambient conditions
- Autocoupled controls
- Preselector peaked at the signal of interest
- Digital trace display
- IF ADJ ON
- REF LVL CAL adjusted
- 1ST LO OUTPUT terminated in 50 ohms
- 2ND IF OUTPUT terminated in 50 ohms
- Two-year calibration cycle (See “Calibration Cycle” below.)
- Environmental requirements met

After a 30-minute warmup at a temperature between 20 °C and 30 °C, the preselector does not have to be peaked at each signal of interest. Factory preselector-peak values are sufficient to meet all specifications.

NOTE REF LVL ADJ uses the CAL OUTPUT signal to calibrate the reference level. How often this adjustment should be performed depends on internal temperature changes. Amplitude temperature drift is a nominal 1 dB/10 °C. The nominal temperature drift is 10 °C, most of which occurs during the first 30 minutes after power-on. Internal temperature equilibrium is reached after 2 hours of operation at a stable ambient temperature.

Characteristics provide useful information in the form of typical, nominal, or approximate values for analyzer performance. Tables of the spectrum analyzer characteristics follow the specifications.

ManualsPlus.com

Calibration Cycle

The performance tests located in Chapter 2 should be used every two years to check the analyzer against the specifications listed in this chapter.

The frequency reference needs to be adjusted as well as checked at the same time. Refer to the 10 MHz Frequency Reference Adjustment in the *Agilent Technologies 8561E/EC and Agilent Technologies 8563E/EC Spectrum Analyzers Service Guide*.

ManualsPlus.com

Frequency Specifications

Frequency Range			
Internal Mixing			
Non-Option 006	9 kHz to 26.5 GHz		
Option 006	30 Hz to 26.5 GHz		
Internal Mixing Bands	**Frequency Range**	**Harmonic Mixing Mode N***	
Band 0 *Non-Option 006*	9 kHz to 2.9 GHz	1–	
Band 0 *Option 006*	30 Hz to 2.9 GHz	1–	
Band 1	2.75 GHz to 6.46 GHz	1–	
Band 2	5.86 GHz to 13.2 GHz	2–	
Band 3	12.4 GHz to 26.5 GHz	4–	
External Mixing	18 GHz to 325 GHz		
External Mixing Bands			
Frequency Band	**Frequency Range**	**Harmonic Mixing Mode (N*)**	
		Preselected	**Unpreselected**
K	18.0 to 26.5	n/a	6–
A	26.5 to 40.0	8+	8–
Q	33.0 to 50.0	10+	10–
U	40.0 to 60.0	10+	10–
V	50.0 to 75.0	14+	14–
E	60.0 to 90.0	n/a	16–
W	75.0 to 110.0	18+	18–
F	90.0 to 140.0	n/a	24–
D	110.0 to 170.0	n/a	30–
G	140.0 to 220.0	n/a	36–
Y	170.0 to 260.0	n/a	44–
J	220.0 to 325.0	n/a	54–

* N is the harmonic mixing mode. For negative mixing modes (as indicated by the "–"), the desired 1st LO harmonic is higher than the tuned frequency by the 1st IF (3.9107 GHz for the 30 Hz to 2.9 GHz band, 310.7 MHz for all other bands). For positive mixing modes, the desired 1st LO harmonic is lower than the tuned frequency by 310.7 MHz.

ManualsPlus.com

Frequency Readout Accuracy	
Accuracy of START, CENTER, STOP or MARKER frequency	
SPAN > 2 MHz × N*	<±(frequency readout × frequency reference accuracy† + 5% of frequency span + 15% of resolution bandwidth + 10 Hz)
SPAN ≤ 2 MHz × N*	<±(frequency readout × frequency reference accuracy† + 1% of frequency span + 15% of resolution bandwidth + 10 Hz)

* N is the harmonic mixing mode.

† frequency reference accuracy = (aging × period of time since adjustment) + initial achievable accuracy + temperature stability.

Frequency Count Marker	
Frequency Count Marker Resolution	Selectable from 1 Hz to 1 MHz
Frequency Count Marker Accuracy (for signal-to-noise ratio ≥25 dB)	<±(marker frequency × frequency reference accuracy‡ + 2 Hz × N† + 1 LSD)
Delta Frequency Count Accuracy (for signal-to-noise ratio ≥25 dB)	<±(delta frequency × frequency reference accuracy‡ + 4 Hz × N† + 2 LSD)

† N is the harmonic mixing mode.

‡ Frequency Reference Accuracy = (aging × period of time since adjustment + initial achievable accuracy + temperature stability).

ManualsPlus.com

Frequency Reference Accuracy	
Non-Option 103	
Aging	$<\pm 0.5 \times 10^{-9}$/day (after 7 day warmup)
	$<\pm 1 \times 10^{-7}$/year
Temperature Stability	$<\pm 1 \times 10^{-8}$, –10 °C to +55 °C, referenced to 25 °C
Option 103	
Aging	$<\pm 2 \times 10^{-6}$/year
Settability	$<\pm 1 \times 10^{-6}$
Temperature Stability	$<\pm 1 \times 10^{-6}$, –10 °C to +55 °C, referenced to 25 °C

ManualsPlus.com

Stability		
Residual FM		
(zero span, 10 Hz RES BW)		
Non-Option 103	< 1.0 Hz × N* peak-to-peak in 20 ms†	
Option 103	< 10 Hz × N* peak-to-peak in 20 ms	
Noise Sidebands		
For Frequencies ≤1 GHz		
(Refer to the characteristics section for frequencies > 2.9 GHz)		
Offset	**Non-Option 103**	**Option 103**
100 Hz		
serial number prefix <3436A	<–80 dBc/Hz‡	<–70 dBc/Hz‡
serial number prefix ≥3436A	<–88 dBc/Hz‡	<–70 dBc/Hz‡
1 kHz	<–97 dBc/Hz‡	<–90 dBc/Hz‡
10 kHz††	<–113 dBc/Hz§	<–113 dBc/Hz§
30 kHz††	<–113 dBc/Hz#	<–113 dBc/Hz#
100 kHz‡‡		
serial number prefix <3436A	<–113 dBc/Hz§	<–113 dBc/Hz§
serial number prefix ≥3436A	<–117 dBc/Hz**	<–117 dBc/Hz**

* N is the harmonic mixing mode.

† See Resolution Bandwidth Usability in “Frequency Characteristics” for further information.

‡ Add 5.2 dB × (f/1 GHz) –1) for f > 1 GHz and f ≤ 2.9 GHz.

§ Add 2.5 dB × (f/1 GHz) –1) for f > 1 GHz and f ≤ 2.9 GHz.

#Add 3.0 dB × (f/1 GHz) –1) for f > 1 GHz and f ≤ 2.9 GHz.

**Add 2.0 dB for frequencies > 1 GHz and ≤ 2.9 GHz

†† For resolution bandwidth ≤ 1 kHz or frequency span ≤ 745 kHz.

‡‡ For resolution bandwidth ≥ 3 kHz or frequency span > 745 kHz.

ManualsPlus.com

Frequency Span	
Range	
Internal Mixing	0 Hz, 100 Hz to 13.2 GHz over the 10-division display horizontal axis, variable in approximately 1% increments, or in a 1, 2, 5 sequence.
External Mixing†	Minimum span = 100 Hz × N*
Accuracy	
SPAN > 2 MHz × N*	<±5%
SPAN ≤ 2 MHz × N*	<±1%

* N is the harmonic mixing mode.

† Resolution bandwidths ≤100 Hz are not available in external mixing. External mixing is not available for Option 002 or Option 327.

ManualsPlus.com

Resolution Bandwidths (–3 dB)	
Range*	
Non-Option 103	1 Hz to 1 MHz (selectable in a 1, 3, 10 sequence) and 2 MHz (3 MHz at –6 dB)
Option 103	10 Hz to 1 MHz (selectable in a 1, 3, 10 sequence) and 2 MHz (3 MHz at –6 dB)
Accuracy	
1 Hz to 300 kHz RES BW	<±10%
1 MHz RES BW	<±25%
2 MHz RES BW	<+50%, –25%
Selectivity (60 dB/3 dB bandwidth ratio)	
RES BW ≥300 Hz	<15:1
RES BW ≤100 Hz	<5:1
Bandwidth Shape	
1 and 2 MHz RES BW	Approximately Gaussian
300 Hz to 300 kHz RES BW	Synchronously tuned, 4-pole filters
1 Hz to 100 Hz RES BW	Digital, approximately Gaussian
* Resolution bandwidths ≤100 Hz are not available in external mixing.	

Video Bandwidth	
(Post-detection low-pass filter averages displayed noise for a smooth trace.)*	
Range	1 Hz to 3 MHz† in a 1, 3, 10 sequence
* Video bandwidth filtering is not available in resolution bandwidths ≤ 100 Hz when SPAN 0 Hz with firmware revisions 930809 and earlier. † The video bandwidth upper limit is 450 kHz in sample detection mode.	

ManualsPlus.com

Sweep

Sweep Time	
Range	
Span = 0	
Non-Option 007 (E-Series)	
Analog display	50 µs to <30 ms
Digital display	30 ms to 6,000 s
Option 007 E-Series and all EC-Series instruments	
Digital display	50 µs to 6,000 s
Span ≥ 100 Hz	
RES BW ≥300 Hz	50 ms to 2,000 s
RES BW ≤100 Hz	50 ms to 100,000 s (span-dependent)
Accuracy (Span = 0 Hz)	
Non-Option 007 (E-Series) and all EC-Series instruments	
Sweep time 30 ms to 6,000 s	<±1%
Sweep time <30 ms	<±10%
Option 007 (E-Series)	
Sweep time 30 ms to 6,000 s	<±1%
Sweep time <30 ms	<±0.1%
Sweep Trigger	Delayed, Free Run, Single, Line, External, or Video#
# Video trigger is not available in RES BW settings ≤100 Hz.	

ManualsPlus.com

Delayed Sweep	
Trigger Modes	Free Run, Line, External, Video*
Range	
Span = 0	
Non-Option 007 (E-Series)	+2 µs to +65.535 ms
Option 007 E-Series and all EC-Series instruments	
Sweep time ≥ 30 ms	+2 µs to +65.535 ms
Sweep time < 30 ms	–9.9 ms to +65.535 ms††
Span ≥ 100 Hz	+2 µs to +65.535 ms
Resolution	1 µs
Accuracy#	
Serial prefix 3310A and above	±1 µs
Serial prefix <3310A	
20 °C to 30 °C	±(1 µs + (0.05% × DELAY SWEEP setting)
–10 °C to +55 °C	±(1 µs + (0.12% × DELAY SWEEP setting)

* Video trigger is not available in RES BW settings ≤ 100 Hz.

†† Negative delayed sweep (pre-trigger) is also limited to 50 × sweep time.

In E-Series instruments without Option 007, the delay time will be subject to up to ±0.5 µs of jitter due to synchronization of the input edge trigger to the internal 1 MHz timebase. In E-series instruments with Option 007 and in EC-instruments using sweeptimes <30 ms, the delay time will experience up to ±83 ns of jitter due to synchronization of the input edge trigger to the internal 12 MHz timebase.

ManualsPlus.com

Time-Gated Spectrum Analysis

Gate Delay*	**Edge Mode**	**Level Mode**
Range	3 µs to 65.535 ms	≤0.5 µs
Resolution	1 µs	
Accuracy†		
Serial prefix 3310A and above	<±1 µs	
Serial prefix <3310A		
20 °C to 30 °C	± (1 µs + (0.05% × GATE DELAY setting)	
–10 °C to 55 °C	± (1 µs + (0.12% × GATE DELAY setting)	

* Time from GATE TRIGGER INPUT to positive edge of GATE OUTPUT.

† The gate delay time will experience up to ±0.5 µs of jitter due to synchronization of the input edge trigger to the internal 1 MHz timebase.

Gate Length*	
Range	1 µs to 65.535 ms
Resolution	1 µs
Accuracy	
Serial prefix 3310A and above	<±1 µs
Serial prefix <3310A	
20 °C to 30 °C	± (0.2 µs + (0.05% × GATE LENGTH setting)
–10 °C to 55 °C	± (0.2 µs + (0.12% × GATE LENGTH setting)

* Time from positive edge to negative edge of GATE OUTPUT.

Marker Frequency Resolution	SPAN/600 to a minimum of 1 Hz

Marker Time Resolution	Sweep time/600

ManualsPlus.com

Amplitude Specifications

Measurement Range

Maximum Safe Input Power	
Average Continuous Power (input attenuation ≥10 dB)	+30 dBm (1 W)
Peak Pulse Power (input attenuation ≥30 dB)	+50 dBm (100 W) for pulse widths ≤10 µs and <1% duty cycle.
DC Voltage	<±0.2 V

Gain Compression	
10 MHz to 2.9 GHz (≤–5 dBm at input mixer‡)	<1.0 dB
2.9 GHz to 6.46 GHz (≤0 dBm at input mixer†)	<1.0 dB
6.46 GHz to 13.2 GHz (≤–3 dBm at input mixer)†	<1.0 dB
‡ Mixer level = input level – input attenuation.	

ManualsPlus.com

Displayed Average Noise Level

With no signal at input, 1 Hz video bandwidth, and 0 dB input attenuation, tracking generator off.

Frequency Range	**10 Hz RES BW** *(Option 103)*	**1 Hz RES BW** *(Non-Option 103)*
30 Hz	<–80 dBm	<–90 dBm
1 kHz	<–95 dBm	<–105 dBm
10 kHz	<–110 dBm	<–120 dBm
100 kHz	<–110 dBm	<–120 dBm
1 MHz to 10 MHz	<–130 dBm	<–140 dBm
10 MHz to 2.9 GHz		
serial number prefix <3246A	<–135 dBm	<–145 dBm
serial number prefix 3246A to <3645A	<–134 dBm	<–144 dBm
serial number prefix ≥3645A	<–139 dBm	<–149 dBm
Option H13	<–139 dBm	<–149 dBm
2.9 GHz to 6.46 GHz	<–138 dBm	<–148 dBm
6.46 GHz to 13.2 GHz	<–135 dBm	<–145 dBm
13.2 GHz to 22.0 GHz	<–130 dBm	<–140 dBm
22.0 GHz to 26.5 GHz	<–129 dBm	<–139 dBm
100 kHz	<–110 dBm	<–120 dBm
1 MHz to 10 MHz	<–130 dBm	<–140 dBm
10 MHz to 2.9 GHz	<–141 dBm	<–151 dBm
2.9 GHz to 6.5 GHz	<–138 dBm	<–148 dBm
6.46 GHz to 13.2 GHz	<–135 dBm	<–145 dBm

ManualsPlus.com

Spurious Responses		
All input-related spurious responses, except as noted below.	**Mixer Level***	**Distortion**
10 MHz to 26.5 GHz	–40 dBm	<(–75 + 20 log N†) dBc
Second Harmonic Distortion		
Applied Signal Frequency Range		
1 MHz to 1.45 GHz (serial number prefix <3645A)	–40 dBm	<–72 dBc
20 MHz to 1.45 GHz (serial number prefix ≥3645A)	–40 dBm	<–79 dBc
20 MHz to 1.45 GHz (Option H13)	–40 dBm	<–79 dBc
1.45 GHz to 2.0 GHz	–10 dBm	<–85 dBc
2.0 GHz to 13.25 GHz	–10 dBm	<–100 dBc
Third Order Intermodulation Distortion		
(with two signals at the input mixer, spaced by ≥1 kHz)*		
Frequency Range		
1 MHz to 2.9 GHz (serial number prefix <3645A)	–30 dBm each	<–78 dBc
20 MHz to 2.9 GHz (serial number prefix ≥3645A)	–30 dBm each	<–82 dBc
20 MHz to 2.9 GHz (Option H13)	–30 dBm each	<–82 dBc
2.9 GHz to 6.46 GHz	–30 dBm each	<–90 dBc
6.46 GHz to 26.5 GHz	–30 dBm each	<–75 dBc
Image, Multiple, and Out-of-Band Responses		
Frequency Range		
10 MHz to 26.5 GHz	–10 dBm	<–80 dBc

* Mixer level = input level – input attenuation.

† N = harmonic mixing number

Residual Responses	
>200 kHz with no signal at input, 0 dB input attenuation, N† 1	<–90 dBm

† N harmonic mixing number

ManualsPlus.com

Display Range

Amplitude Scale	10 vertical display divisions, with the reference level (0 dB) at the top graticule line.

Calibration	
LOG	10 dB/DIV for 100 dB display from reference level.*
	5 dB/DIV for 50 dB display expanded from reference level.†
	2 dB/DIV for 20 dB display expanded from reference level.
	1 dB/DIV for 10 dB display expanded from reference level.†
LINEAR	10% of reference level per division over the top nine divisions
	(all 10 divisions for RES BW ≤100 Hz) when calibrated in voltage.

* 10 dB/DIV for 70 dB display from reference level for RES BW ≤100 Hz when SPAN = 0 Hz.

† In E-Series instruments these scales are not available for sweep times < 30 ms without Option 007.

Accuracy

Reference Level Range	
LOG, adjustable in 0.1 dB steps	
Frequency Band	**Range**
30 Hz to 26.5 GHz *(Option 006)*	–120 dBm to +30 dBm
9 kHz to 26.5 GHz *(Non-Option 006)*	–120 dBm to +30 dBm
LINEAR, settable in 1% steps	
30 Hz to 26.5 GHz *(Option 006)*	2.2 µV to 7.07 V
9 kHz to 26.5 GHz *(Non-Option 006)*	2.2 µV to 7.07 V

ManualsPlus.com

Reference Level Uncertainty

Frequency Response		
(with 10 dB input attenuation)		**Typical**
Relative (referenced to midpoint between highest and lowest peak excursions)		(20 °C to 30 °C)
DC Coupled		
30 Hz to 2.9 GHz	<±1.25 dB	<±0.8 dB
100 MHz to 2.3 GHz	<±0.9 dB	<±0.8 dB
2.9 GHz to 6.46 GHz	<±1.5 dB	<±1.1 dB
6.46 GHz to 13.2 GHz	<±2.2 dB	<±1.5 dB
AC Coupled		
100 kHz to 2.9 GHz	<±1.25 dB	<±0.8 dB
2.9 GHz to 6.5 GHz	<±2.0 dB	<±1.0 dB
6.46 GHz to 13.2 GHz	<±2.2 dB	<±1.5 dB
Absolute (referenced to 300 MHz CAL OUTPUT)		
DC Coupled		
30 Hz to 2.9 GHz	<±1.80 dB	<±1.0 dB
2.9 GHz to 6.46 GHz	<±2.5 dB	<±1.5 dB
6.46 GHz to 13.2 GHz	<±2.9 dB	<±2.0 dB
AC Coupled		
100 kHz to 2.9 GHz	<±1.9 dB	<±1.2 dB
2.9 GHz to 6.46 GHz	<±3.0 dB	<±1.5 dB
6.46 GHz to 13.2 GHz	<±3.0 dB	<±2.0 dB

Band Switching Uncertainty	
(Additional uncertainty added to Relative Frequency Response for measurements between any two bands)	<±1.0 dB

Calibrator Uncertainty	
–10 dBm, 300 MHz	<±0.3 dB

ManualsPlus.com

Input Attenuator Switching Uncertainty	
(20 to 70 dB settings, referenced to 10 dB attenuation)	
Frequency Range	
9 kHz to 2.9 GHz	<±0.6 dB/10 dB step, ±1.8 dB max.
30 Hz to 2.9 GHz *(Option 006)*	<±0.6 dB/10 dB step, ±1.8 dB max.

IF Gain Uncertainty	
(0 dBm to –80 dBm reference levels with 10 dB input attenuation)	<±1.0 dB

Resolution Bandwidth Switching Uncertainty	
(Referenced to 300 kHz resolution bandwidth at the reference level.)*	<±0.5 dB

* Scale fidelity is not the same for RES BW ≤100 Hz as for RES BW ≥300 Hz. Therefore, signals not at the reference level will experience an additional amplitude difference when switching between these two sets of RES BW settings, due to differences in scale fidelity.

ManualsPlus.com

Pulse Digitization Uncertainty	
(Pulse response mode, PRF >720/sweep time)	
LOG	
Resolution Bandwidth ≤ 1 MHz	<1.25 dB peak-to-peak
Resolution Bandwidth = 2 MHz	<3 dB peak-to-peak
LINEAR	
Resolution Bandwidth ≤ 1 MHz	<4% of reference level peak-to-peak
Resolution Bandwidth = 2 MHz	<12% of reference level peak-to-peak

IF Alignment Uncertainty	
(additional uncertainty when using 300 Hz RES BW only)	<±0.5 dB

ManualsPlus.com

Scale Fidelity*	
LOG	
Incremental	
0 to –90 dB range†	
RES BW ≥ 300 Hz	<±0.1 dB/dB
RES BW ≤ 100 Hz	<±0.2 dB/2 dB
Cumulative	
0 to –90 dB range†	
RES BW ≥ 300 Hz	<±0.1 dB/dB from the reference level to a maximum of ±0.85 dB
RES BW ≤ 100 Hz	<±0.2 dB/2 dB from the reference level to a maximum of ±0.85 dB
0 to –100 dB range†	
RES BW ≥ 300 Hz	±2.5 dB *characteristic*
RES BW ≤ 100 Hz	maximum of ±1.5 dB
LINEAR	<±3% of reference level

* Scale fidelity is not the same for RES BW ≤100 Hz as for RES BW ≥ 300 Hz. Therefore, signals not at the reference level will experience an additional amplitude difference when switching between these two sets of RES BW settings due to the differences in scale fidelity.

† 0 to –70 dB range for RES BW ≤100 Hz when SPAN = 0 Hz.

Marker Amplitude Resolution*		
	(Sweep time ≥ 30 ms)	
Scale:	LOG 10 dB/DIV	(1/6) dB
	LOG 5 dB/DIV	(1/12) dB
	LOG 2 dB/DIV	(1/30) dB
	LOG 1 dB/DIV	(1/60) dB
	LINEAR	Reference Level/600

* In E-Series instruments markers are not available for sweep times < 30 ms with RES BW ≥ 300 Hz without Option 007. For Option 007, see the characteristics section.

ManualsPlus.com

Inputs and Outputs Specifications

CAUTION Any electrostatic discharge according to IEC 801-2/1991 to the center pins of any of the connectors may cause damage to the associated circuitry.

IF INPUT	
Connector	SMA female, front panel
Input level for full-screen deflections (external mixing mode, 0 dBm reference level, 30 dB conversion loss)	–30 dBm ± 1.5 dB

GPIB	
Connector	IEEE-488 bus connector
Interface Functions	SH1, AH1, T6, TE0, L4, LE0, SR1, RL1, PP1, DC1, DT1, C1, C28
Direct Plotter Output	Supports HP/Agilent 7225A, HP/Agilent 7440A, HP/Agilent 7470A, HP/Agilent 7475A, HP/Agilent 7550A
Direct Printer Output	Supports HP 3630A PaintJet, HP 2225A ThinkJet

CAL OUTPUT	
Connector	BNC female, front panel
Frequency	300 MHz ±(300 MHz × frequency reference accuracy†)
Amplitude	–10 dBm ±0.3 dB

† Frequency Reference Accuracy = (aging × period of time since adjustment + initial achievable accuracy + temperature stability).

1ST LO OUTPUT	
Connector	SMA female, front panel
Amplitude	+16.5 dBm ±2.0 dB

10 MHz REF IN/OUT	
Connector	BNC female, rear panel
Output Frequency	10 MHz ±(10 MHz × frequency reference accuracy†)

† Frequency Reference Accuracy = (aging × period of time since adjustment + initial achievable accuracy + temperature stability).

ManualsPlus.com

General Specifications

Environmental Specifications	
Military Specification per MIL-T-28800, Type III, Class 3, Style B (EC)/ Style C (E), as follows:	
Calibration Interval	2 years
Warmup	5 minutes from ambient conditions*
Temperature	
Operating	–10 °C to +55 °C (E) / 0 °C to +55 °C (EC)
Non-operating	–51 °C to +71 °C
Humidity	95% at 40 °C for 5 days
Altitude	
Operating	15,000 feet
Non-operating	50,000 feet
Rain resistance	Drip-proof at 16 liters/hour/square foot
Vibration	
5 to 15 Hz	0.060 inch peak-to-peak excursion
16 to 25 Hz	0.040 inch peak-to-peak excursion
26 to 55 Hz	0.020 inch peak-to-peak excursion
Pulse Shock	
Half Sine	30 g for 11 ms duration
Transit Drop	8 inch drop on 6 faces and 8 corners
Power Main	Voltage fluctuations within the range specified in the spectrum analyzer “Power Requirements.”
Power Main	Operating environment within the limits of installation category II according to IEC 1010.
Pollution	Operating environment within the limits of pollution degree 2 according to IEC 664.

* Two hours for conditions of internal condensation, 30 minutes to meet frequency response specifications without preselector peaking. When operating outside the 20 °C to 30 °C ambient temperature range, preselector peaking is always required to meet frequency response specifications.

ManualsPlus.com

Electromagnetic Compatibility	
	Conducted and radiated interference is in compliance with CISPR, Publication 11 (1990).
Military Specification	Meets the requirements of MIL-STD-461C, Part 2, with the exceptions shown below:
Conducted Emissions	
CE01 (Narrowband)	1 kHz to 15 kHz only
CE03 (Narrowband)	Full limits
CE03 (Broadband)	20 dB relaxation from 15 kHz to 100 kHz
Conducted Susceptibility	
CS01	Full Limits
CS02	Full Limits with 40 dB relaxation at IF frequencies. Refer also to “Radiated Immunity” in Amplitude Characteristics.
CS06	Full Limits
Radiated Emissions	
RE01	Test probe at 15 cm, front and rear panel search excluded.
RE02	Full limits to 1 GHz
Radiated Susceptibility	
RS03	Limited to 3 V/m from 14 kHz to 1 GHz with 40 dB relaxation at IF frequencies. Refer also to “Radiated Immunity” in Amplitude Characteristics.

ManualsPlus.com

Power Requirements	
115 Vac Operation	
Voltage	90 V to 140 V rms
Current	3.2 A rms maximum
Frequency	47 Hz to 440 Hz
230 Vac Operation	
Voltage	180 V to 250 V rms
Current	1.8 A rms maximum
Frequency	47 Hz to 66 Hz
Maximum Power Dissipation	180 W

Audible Noise	<5.0 Bels, 20 °C to 30 °C (ISO DP7779)

Weight	20 kg (44 lb)

ManualsPlus.com

Dimensions

With Handle and Front Cover:

(A) 202 mm (7-15/16 in) high

(C) 366 mm (14-7/16 in) wide

(F) 503 mm (19-13/16 in) deep

Without Handle and Front Cover:

(B) 187 mm (7-3/8 in) high

(D) 337 mm (13-1/4 in) wide

(E) 461 mm (18-1/8 in) deep

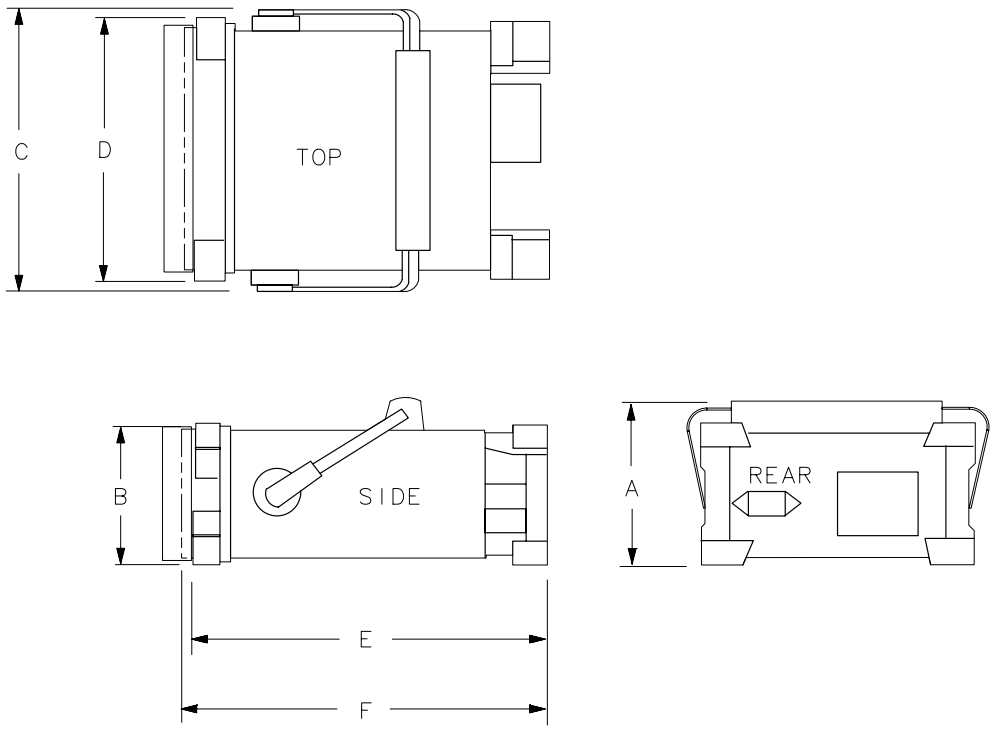

ManualsPlus.com

Frequency Characteristics

These are not specifications. Characteristics provide useful information about instrument performance.

Frequency Reference Accuracy	
Non-Option 103	
Initial Achievable Accuracy	$<\pm 2.2 \times 10^{-8}$
(includes gravitational sensitivity, retrace, and settability)	
Daily Aging (average over 7 days after being powered on for 7 days)	$<\pm 5 \times 10^{-10}$
Warmup	
(Internal frequency reference selected)	
After 5 minutes	$<\pm 1 \times 10^{-7}$ of final frequency* (0 °C to +55 °C) $<\pm 1 \times 10^{-6}$ of final frequency* (–10 °C)
After 15 minutes	$<\pm 1 \times 10^{-8}$ of final frequency* (–10 °C to +55 °C)
Option 103	
Initial Achievable Accuracy	$<\pm 1 \times 10^{-6}$

* Final frequency is defined as frequency 60 minutes after power-on with analyzer set to internal frequency reference.

Bandwidth Selectivity	
RES BW ≤100 Hz	<4.5:1
RES BW = 1 MHz	<8:1
RES BW = 2 MHz	<5.5:1

ManualsPlus.com

Impulse Bandwidth	
RES BW 2 MHz	2.93 MHz ±10%
RES BW 1 MHz	1.60 MHz ±7%
RES BW 300 kHz	491 kHz ±7%
300 Hz ≤ RES BW ≤ 100 kHz	1.62 × RES BW ± 10%

Stability	
Noise Sidebands	
For frequencies ≤ 1 GHz, 100 kHz offset from carrier, and frequency span > 2 MHz	≤121 dBc/Hz

ManualsPlus.com

Figure 5-1 Noise Sidebands Normalized to 1 Hz BW versus Offset from Carrier

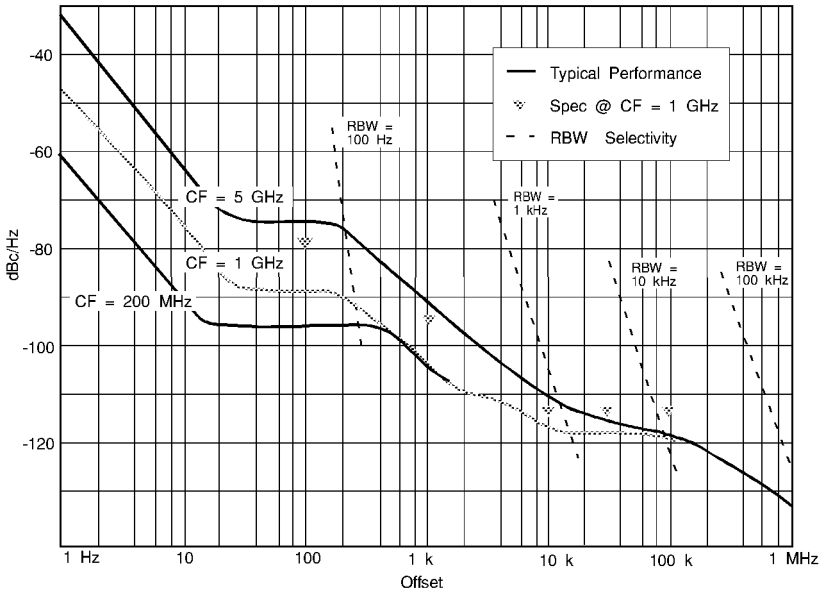

Figure 5-2 Typical On-Screen Dynamic Range vs. Offset from 1 GHz Center Freq. for all RBW's

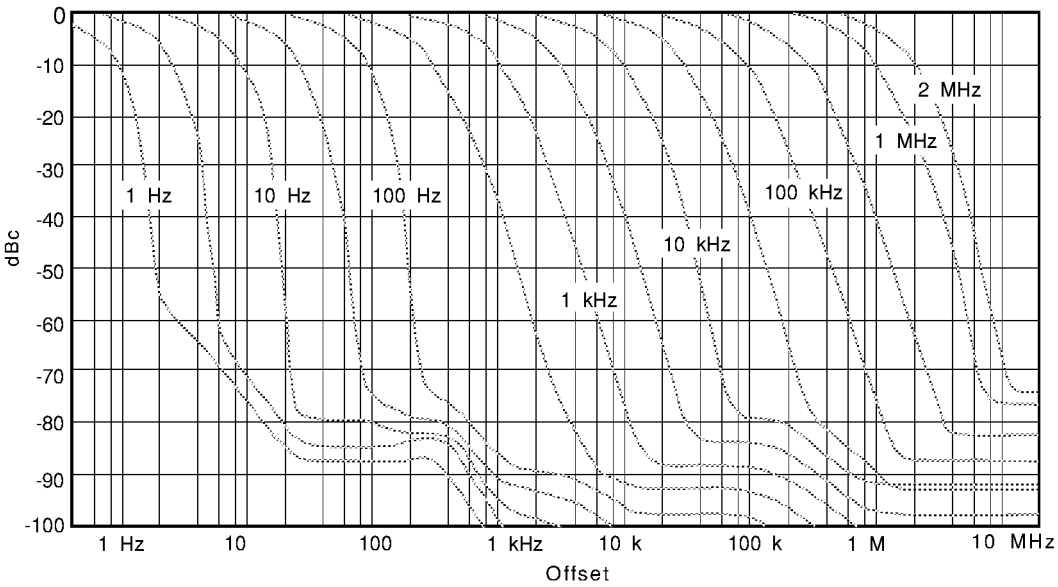

ManualsPlus.com

Sweep

Sweep Time Accuracy	
Span ≥100 Hz	<±15%

Resolution Bandwidth Usability* ***(Non-Option 103)***			
RES BW	**Maximum Usable Frequency**		
	Video Average OFF	**Video Average ON, 10 Video Averages**	
		Source/Spectrum Analyzer Frequency References	
		Locked†	**Independent‡**
≥30 Hz	>26.5 GHz	>26.5 GHz	>26.5 GHz
10 Hz	>26.5 GHz	>26.5 GHz	>26.5 GHz
3 Hz	>26.5 GHz	>26.5 GHz	2 GHz
1 Hz	>26.5 GHz	>26.5 GHz	200 MHz

* Resolution Bandwidth Usability is the maximum usable frequency for a given resolution bandwidth. The maximum usable frequency is limited by signal instability resulting from spectrum analyzer residual FM during the measurement interval. Measurements at frequencies less than the maximum usable frequency will have a typical amplitude uncertainty of less than 1 dB. These characteristics apply after a 30 minute warmup.

† Source and spectrum analyzer share the same frequency reference.

‡ Source and spectrum analyzer do not share the same frequency reference.

ManualsPlus.com

Amplitude Characteristics

Dynamic Range

Figure 5-3 **Nominal Dynamic Range**

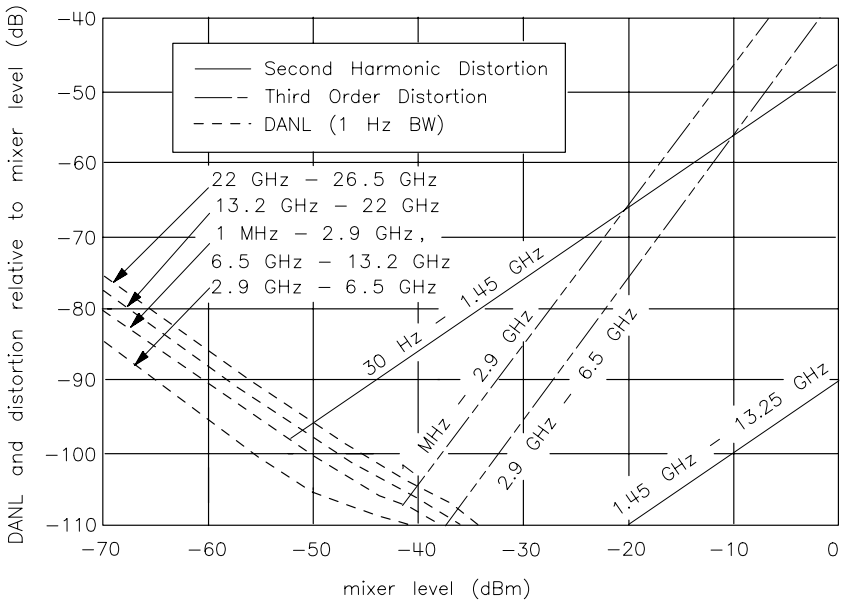

Amplitude Measurement Range

Spurious Responses	Frequency Range	Distortion
(all input related spurious responses <1 kHz from the carrier)	10 MHz to 2.9 GHz	<–55 dBc

ManualsPlus.com

Amplitude Accuracy

Band-to-Band Frequency Response	Band-to-Band Frequency Response (dB)					
Frequency response uncertainty for measurements between any two internal mixing bands. Equivalent to the sum of the two Relative Frequency Response values plus Band Switching Uncertainty.		**Band 0**	**Band 1**	**Band 2**	**Band 3A**	**Band 3B**
	Band 0	n/a	3.75 dB	4.45 dB	4.75 dB	5.55 dB
	Band 1	3.75 dB	n/a	4.7 dB	5.0 dB	5.8 dB
	Band 2	4.45 dB	4.7 dB	n/a	5.7 dB	6.5 dB
	Band 3A	4.75 dB	5.0 dB	5.7 dB	n/a	6.8 dB
	Band 3B	5.55 dB	5.8 dB	6.5 dB	6.8 dB	n/a
Band 0 30 Hz to 2.9 GHz						
Band 1 2.9 GHz to 6.46 GHz						
Band 2 6.46 GHz to 13.2 GHz						
Band 3A 13.2 GHz to 22 GHz						
Band 3B 22 GHz to 26.5 GHz						

Input Attenuator Repeatability	<±0.2 dB

Input Attenuator Accuracy	
2.9 GHz to 18 GHz	<±1.5 dB/10 dB step, ±3.0 dB max.
18 GHz to 26.5 GHz	<±3.0 dB/10 dB step, ±6.0 dB max.

Pulse Digitization Uncertainty	
(Pulse response mode, PRF >720/sweep time)	
Standard Deviation	<0.2 dB

ManualsPlus.com

Marker Amplitude Resolution		
	EC-Series and E-Series with Option 007, sweep time < 30 ms, zero span	
Scale:	LOG 10 dB/DIV	≤ (1/2) dB
	LOG 5 dB/DIV	≤ (1/4) dB
	LOG 2 dB/DIV	≤ (1/10) dB
	LOG 1 dB/DIV	≤ (1/20) dB
	LINEAR	≤ Reference Level/200

Demodulation

Spectrum Demodulation	
Modulation Type	AM and FM (5 kHz peak deviation)
Audio Output	Internal speaker and phone jack with volume control.
Pause Time at Marker Frequency	100 ms to 60 s

Radiated Immunity

Radiated Immunity
When tested at 3 V/m according to IEC 801-3/1984 the displayed average noise level will be within specifications over the full immunity test frequency range of 27 to 500 MHz except that at the immunity test frequency of 310.7 MHz ± selected resolution bandwidth the displayed average noise level may be up to –80 dBm. When the analyzer tuned frequency is identical to the immunity test signal frequency there may be signals of up to –90 dBm displayed on the screen.

ManualsPlus.com

Inputs and Outputs Characteristics

CAUTION Any electrostatic discharge according to IEC 801-2/1991 to the center pins of any of the connectors may cause damage to the associated circuitry.

INPUT 50Ω	
Connector	Precision Type N female, front panel
Impedance	50 Ω
VSWR (at tuned frequency)	
	<1.5:1 for <2.9 GHz and ≥10 dB Input Attenuation
	<2.3:1 for <2.9 GHz and ≥10 dB Input Attenuation
	<3.0:1 for 0 dB Input Attenuation
LO Emission Level* (average)	
10 dB Input Attenuation	<–80 dBm
* Level of 1st LO, 3.0 to 6.8 GHz, present at INPUT 50Ω connector.	

IF INPUT *(Deleted on Option 002 and Option 327)*	
(2nd IF input for use with external mixers)	
Connector	SMA female, front panel
Impedance (dc coupled)	50 Ω
Frequency	310.7 MHz
Noise Figure	7 dB
1 dB Gain Compression Level	–23 dBm
Full Screen Level	–30 dBm
(Gain Compression and Full Screen Levels apply with 30 dB conversion loss setting and 0 dBm reference level.)	

1ST LO OUTPUT	
Connector	SMA female, front panel
Impedance	50 Ω
Frequency Range	3.0000 GHz to 6.8107 GHz†
† 3.8107 GHz to 6.8107 GHz for analyzers equipped with Option 002.	

ManualsPlus.com

CAL OUTPUT	
Connector	BNC female, front panel
Impedance	50 Ω

10 MHz REF IN/OUT	
Connector	BNC female, rear panel
Impedance	50 Ω
Output Amplitude	0 dBm
Input Frequency	10 MHz × $(1 \pm 2 \times 10^{-5})$
Input Amplitude	–2 to +10 dBm
External Reference Phase Noise	
Analyzer noise sideband performance will not be degraded if the external reference phase noise is within the limits given below.	
Non-Option 103	<–135 dBc/Hz at 100 Hz offset
Option 103	<–110 dBc/Hz at 100 Hz offset

VIDEO OUTPUT*	
Connector	BNC female, rear panel
Impedance (dc coupled)	50 Ω
Amplitude (RES BW ≥300 Hz)	0 to +1 V full scale
Scaling	
RES BW ≥300 Hz	linear or log 100 dB/V
RES BW ≤100 Hz	4.8 kHz, auto-ranged level with dc offset

* The VIDEO OUTPUT is a video signal for RES BW ≥300 Hz with switching transients and IF ADJ signals between sweeps. For RES BW ≤100 Hz the output is an IF signal with transients and IF ADJ signals between and during sweeps.

ManualsPlus.com

LO SWP|FAV OUTPUT and	
LO SWP|0.5 V/GHz OUTPUT*	
Connector	BNC female, rear panel
Impedance (dc coupled)	120 Ω
LO SWP OUTPUT (no load)	0 to + 10 V
0.5 V/GHz OUTPUT	
Internal Mixer Mode	0.5 V/GHz of tuned frequency (no load)
External Mixer Mode	([(1.5 V/GHz) × LO frequency)] – 0.2054 V) ±50 mV
0.25 V/GHz OUTPUT†	0.25 V/GHz of tuned frequency (no load)

* This connector is labeled `LO SWP|0.5 V/GHz OUTPUT` on older spectrum analyzers and `LO SWP|FAV OUTPUT` on newer spectrum analyzers.

† The 0.25 V/GHz output is available only in the Agilent 8564E and Agilent 8565E.

BLKG/GATE OUTPUT	
Connector	BNC female, rear panel
Impedance	50 Ω
Blanking Mode	
Amplitude during sweep	Low TTL Level
Amplitude during retrace	High TTL Level
Gate Mode	
Gate On	High TTL level
Gate Off	Low TTL level

EXT/GATE TRIG INPUT	
Connector	BNC female, rear panel
Impedance	10 kΩ
Trigger Level	Settable to high TTL, or low TTL, or edge triggered TTL

PROBE POWER (front panel)	
Voltage	+15 V dc, –12.6 V dc
Current	150 mA maximum, each

ManualsPlus.com

EARPHONE	
Connector	1/8 inch miniature monophonic jack, rear panel
Power Output	0.2 W into 4 Ω

2ND IF OUT			
(*Option 001 instruments only*)			
Connector	SMA female, rear panel		
Impedance	50 Ω		
Frequency	310.7 MHz		
Frequency Range	**3 dB BW**	**Noise Figure**	**Conversion Gain**
10 kHz to 2.9 GHz			
serial number prefix <3645A	>28 MHz	25 dB	–15 dB
serial number prefix ≥3645A	>28 MHz	20 dB	– 8 dB
2.9 GHz to 6.5 GHz	>30 MHz	22 dB	–3 dB
6.5 GHz to 13.2 GHz	>30 MHz	26 dB	–7 dB
13.2 GHz to 22 GHz	>30 MHz	30 dB	–11 dB
22 GHz to 26.5 GHz	>30 MHz	32 dB	–13 dB

ALT SWEEP OUT	
(Option 005 analyzers only)	
Connector	BNC female, rear panel
Impedance	100 Ω

ManualsPlus.com

Regulatory Information

The following information applies to the Agilent 8563EC spectrum analyzer.

DECLARATION OF CONFORMITY

According to ISO/IEC Guide 22 and CEN/CENELEC EN 45014

Manufacturer's Name: Agilent Technologies, Inc.

Manufacturer's Address: 1400 Fountaingrove Parkway
Santa Rosa, CA 95403-1799
USA

Declares that the products

Product Name: Spectrum Analyzer

Model Number: 8560EC, 8561EC, 8562EC, 8563EC, 8564EC, 8565EC

Product Options: This declaration covers all options of the above products.

Conform to the following product specifications:

EMC: IEC 61326-1:1997+A1:1998 / EN 61326-1:1997+A1:1998

Standard	Limit
CISPR 11:1990 / EN 55011-1991	Group 1, Class A
IEC 61000-4-2:1995+A1998 / EN 61000-4-2:1995	4 kV CD, 8 kV AD
IEC 61000-4-3:1995 / EN 61000-4-3:1995	3 V/m, 80 - 1000 MHz
IEC 61000-4-4:1995 / EN 61000-4-4:1995	0.5 kV sig., 1 kV power
IEC 61000-4-5:1995 / EN 61000-4-5:1996	0.5 kV L-L, 1 kV L-G
IEC 61000-4-6:1996 / EN 61000-4-6:1998	3 V, 0.15 – 80 MHz
IEC 61000-4-11:1994 / EN 61000-4-11:1998	1 cycle, 100%

Safety: IEC 61010-1:1990 + A1:1992 + A2:1995 / EN 61010-1:1993 +A2:1995
CAN/CSA-C22.2 No. 1010.1-92

Supplementary Information:
The products herewith comply with the requirements of the Low Voltage Directive 73/23/EEC and the EMC Directive 89/336/EEC and carry the CE-marking accordingly.

Santa Rosa, CA, USA 18 Jan. 2000

Greg Pfeiffer/Quality Engineering Manager

For further information, please contact your local Agilent Technologies sales office, agent or distributor.

ManualsPlus.com

The following information applies to the 8563E spectrum analyzer.

DECLARATION OF CONFORMITY

According to ISO/IEC Guide 22 and CEN/CENELEC EN 45014

Manufacturer's Name: Agilent Technologies, Inc.

Manufacturer's Address: 1400 Fountaingrove Parkway
Santa Rosa, CA 95403-1799
USA

Declares that the products

Product Name: Spectrum Analyzer

Model Number: 8560E, 8560EL, 8561E, 8562E, 8562EL, 8563E, 8564E, 8565E

Product Options: This declaration covers all options of the above products.

Conform to the following product specifications:

	Standard	Limit
EMC:	CISPR 11:1990 / EN 55011-1991	Group 1, Class A
	IEC 801-2:1984/EN 50082-1:1992	4 kV CD, 8 kV AD
	IEC 801-3:1984/EN 50082-1:1992	3 V/m, 80 - 1000 MHz
	IEC 801-4:1988/EN 50082-1:1992	0.5 kV sig., 1 kV power

Safety: IEC 61010-1:1990 + A1:1992 + A2:1995 / EN 61010-1:1993 +A2:1995
CAN/CSA-C22.2 No. 1010.1-92

Supplementary Information:
The products herewith comply with the requirements of the Low Voltage Directive 73/23/EEC and the EMC Directive 89/336/EEC and carry the CE-marking accordingly.

Santa Rosa, CA, USA 1 Nov. 2000

Greg Pfeiffer/Quality Engineering Manager

For further information, please contact your local Agilent Technologies sales office, agent or distributor.

ManualsPlus.com

Notice for Germany: Noise Declaration

LpA < 70 dB am Arbeitsplatz (operator position) normaler Betrieb (normal position) nach DIN 45635 T. 19 (per ISO 7779)

CE: European Community

The product design was approved for the European Community.

ISM1-A: Industrial Scientific and Medical Group 1, Class A

The instrument meets the requirements of CISPER 11, Clause 4.

CSA: Canadian Standards Association

The CSA mark is a registered trademark of the Canadian Standards Association. The product meets the requirements.

IEC: International Electrotechnical Commission

This instrument has been designed and tested in accordance with IEC Publication 1010, Safety Requirements for Electronic Measuring Apparatus, and has been supplied in a safe condition. The instruction documentation contains information and warnings which must be followed by the user to ensure safe operation and to maintain the instrument in a safe condition.

This product conforms to Enclosure Protection IP 2 0 according to IEC-529. The enclosure protects against finger access to hazardous parts within the enclosure; the enclosure does not protect against the entrance of water.

ManualsPlus.com

ManualsPlus.com

6 8564E/EC Specifications and Characteristics

ManualsPlus.com

Specifications and Characteristics

The following tables list the spectrum analyzer specifications.

Unless stated otherwise, all specifications describe the analyzer warranted performance under the following conditions:

- Five-minute warmup for ambient conditions
- Autocoupled controls
- Preselector peaked at the signal of interest
- Digital trace display
- IF ADJ ON
- REF LVL CAL adjusted
- 1ST LO OUTPUT terminated in 50 ohms
- 2ND IF OUTPUT terminated in 50 ohms
- One-year calibration cycle (See “Calibration Cycle” below.)
- Environmental requirements met

After a 30-minute warmup at a temperature between 20 °C and 30 °C, the preselector does not have to be peaked at each signal of interest. Factory preselector-peak values are sufficient to meet all specifications.

NOTE REF LVL ADJ uses the CAL OUTPUT signal to calibrate the reference level. How often this adjustment should be performed depends on internal temperature changes. Amplitude temperature drift is a nominal 1 dB/10 °C. The nominal temperature drift is 10 °C, most of which occurs during the first 30 minutes after power-on. Internal temperature equilibrium is reached after 2 hours of operation at a stable ambient temperature.

Characteristics provide useful information in the form of typical, nominal, or approximate values for analyzer performance. Tables of the spectrum analyzer characteristics follow the specifications.

ManualsPlus.com

Calibration Cycle

The performance tests located in Chapter 2 should be used once every year to check the analyzer against the specifications listed in this chapter.

The frequency reference needs to be adjusted as well as checked at the same time. Refer to the 10 MHz Frequency Reference Adjustment in the *Agilent Technologies 8564E/EC and Agilent Technologies 8565E/EC Spectrum Analyzers Service Guide*.

ManualsPlus.com

Frequency Specifications

Frequency Range			
Internal Mixing			
Non-Option 006	9 kHz to 40 GHz		
Option 006	30 Hz to 40 GHz		
Internal Mixing Bands	**Frequency Range**	**Harmonic Mixing Mode N***	
Band 0 *Non-Option 006*	9 kHz to 2.9 GHz	1–	
Band 0 *Option 006*	30 Hz to 2.9 GHz	1–	
Band 1	2.75 GHz to 6.46 GHz	1–	
Band 2	5.86 GHz to 13.2 GHz	2–	
Band 3	12.4 GHz to 26.8 GHz	4–	
Band 4	26.4 GHz to 31.15 GHz	4	
Band 5	31.0 GHz to 40 GHz	8–	
External Mixing	18 GHz to 325 GHz		
External Mixing Bands			
Frequency Band	**Frequency Range**	**Harmonic Mixing Mode (N*)**	
		Preselected	**Unpreselected**
K	18.0 to 26.5	n/a	6–
A	26.5 to 40.0	8+	8–
Q	33.0 to 50.0	10+	10–
U	40.0 to 60.0	10+	10–
V	50.0 to 75.0	14+	14–
E	60.0 to 90.0	n/a	16–
W	75.0 to 110.0	18+	18–
F	90.0 to 140.0	n/a	24–
D	110.0 to 170.0	n/a	30–
G	140.0 to 220.0	n/a	36–
Y	170.0 to 260.0	n/a	44–
J	220.0 to 325.0	n/a	54–

* N is the harmonic mixing mode. For negative mixing modes (as indicated by the “–”), the desired 1st LO harmonic is higher than the tuned frequency by the 1st IF. For positive mixing modes, (as indicated by the “+”), the desired LO Harmonic is lower than the tuned frequency by the 1st IF. The 1st IF is 3.9107 GHz for internal mixing bands 0, 4, and 5, and 310.7 MHz for all other internal mixing bands and all external mixing bands.

ManualsPlus.com

Frequency Readout Accuracy	
Accuracy of START, CENTER, STOP or MARKER frequency	
SPAN > 2 MHz × N*	<±(frequency readout × frequency reference accuracy† + 5% of frequency span + 15% of resolution bandwidth + 10 Hz)
SPAN ≤ 2 MHz × N*	<±(frequency readout × frequency reference accuracy† + 1% of frequency span + 15% of resolution bandwidth + 10 Hz)

* N is the harmonic mixing mode.

† frequency reference accuracy = (aging × period of time since adjustment) + initial achievable accuracy + temperature stability.

Frequency Count Marker	
Frequency Count Marker Resolution	Selectable from 1 Hz to 1 MHz
Frequency Count Marker Accuracy (for signal-to-noise ratio ≥25 dB)	<±(marker frequency × frequency reference accuracy‡ + 2 Hz × N† + 1 LSD)
Delta Frequency Count Accuracy (for signal-to-noise ratio ≥25 dB)	<±(delta frequency × frequency reference accuracy‡ + 4 Hz × N† + 2 LSD)

† N is the harmonic mixing mode.

‡ Frequency Reference Accuracy = (aging × period of time since adjustment + initial achievable accuracy + temperature stability).

ManualsPlus.com

Frequency Reference Accuracy	
Non-Option 103	
Aging	$<\pm 0.5 \times 10^{-9}$/day (after 7 day warmup)
	$<\pm 1 \times 10^{-7}$/year
Temperature Stability	$<\pm 1 \times 10^{-8}$, –10 °C to +55 °C, referenced to 25 °C
Option 103	
Aging	$<\pm 2 \times 10^{-6}$/year
Settability	$<\pm 1 \times 10^{-6}$
Temperature Stability	$<\pm 1 \times 10^{-6}$, –10 °C to +55 °C, referenced to 25 °C

ManualsPlus.com

Stability

Residual FM

(zero span, 10 Hz RES BW)

Non-Option 103	< 1.0 Hz × N* peak-to-peak in 20 ms†
Option 103	< 10 Hz × N* peak-to-peak in 20 ms

Noise Sidebands

For Frequencies ≤1 GHz

(Refer to the characteristics section for frequencies > 2.9 GHz)

Offset	**Non-Option 103**	**Option 103**
100 Hz		
serial number prefix <3510A	<–80 dBc/Hz‡	<–70 dBc/Hz‡
serial number prefix ≥3510A	<–88 dBc/Hz‡	<–70 dBc/Hz‡
1 kHz	<–97 dBc/Hz‡	<–90 dBc/Hz‡
10 kHz**	<–113 dBc/Hz§	<–113 dBc/Hz§
100 kHz††		
serial number prefix <3510A	<–116 dBc/Hz#	<–116 dBc/Hz#
serial number prefix ≥3510A	<–117 dBc/Hz#	<–117 dBc/Hz#

* N is the harmonic mixing mode.

† See Resolution Bandwidth Usability in “Frequency Characteristics” for further information.

‡ Add 5.2 dB × (f/1 GHz) –1) for f > 1 GHz and f ≤ 2.9 GHz.

§ Add 2.5 dB × (f/1 GHz) –1) for f > 1 GHz and f ≤ 2.9 GHz.

#Add 3.0 dB × (f/1 GHz) –1) for f > 1 GHz and f ≤ 2.9 GHz.

**Add 2.0 dB for frequencies > 1 GHz and ≤ 2.9 GHz

†† For resolution bandwidth ≤ 1 kHz or frequency span ≤ 745 kHz.

‡‡ For resolution bandwidth ≥ 3 kHz or frequency span > 745 kHz.

ManualsPlus.com

Frequency Span	
Range	
Internal Mixing	0 Hz, 100 Hz to 13.2 GHz over the 10-division display horizontal axis, variable in approximately 1% increments, or in a 1, 2, 5 sequence.
External Mixing†	Minimum span = 100 Hz × N*
Accuracy	
SPAN > 2 MHz × N*	<±5%
SPAN ≤ 2 MHz × N*	<±1%

* N is the harmonic mixing mode.

† Resolution bandwidths ≤100 Hz are not available in external mixing. External mixing is not available for Option 002 or Option 327.

ManualsPlus.com

Resolution Bandwidths (–3 dB)	
Range*	
Non-Option 103	1 Hz to 1 MHz (selectable in a 1, 3, 10 sequence) and 2 MHz (3 MHz at –6 dB)
Option 103	10 Hz to 1 MHz (selectable in a 1, 3, 10 sequence) and 2 MHz (3 MHz at –6 dB)
Accuracy	
1 Hz to 300 kHz RES BW	<±10%
1 MHz RES BW	<±25%
2 MHz RES BW	<+50%, –25%
Selectivity (60 dB/3 dB bandwidth ratio)	
RES BW ≥300 Hz	<15:1
RES BW ≤100 Hz	<5:1
Bandwidth Shape	
1 and 2 MHz RES BW	Approximately Gaussian
300 Hz to 300 kHz RES BW	Synchronously tuned, 4-pole filters
1 Hz to 100 Hz RES BW	Digital, approximately Gaussian
* Resolution bandwidths ≤100 Hz are not available in external mixing.	

Video Bandwidth	
(Post-detection low-pass filter averages displayed noise for a smooth trace.)*	
Range	1 Hz to 3 MHz† in a 1, 3, 10 sequence
* Video bandwidth filtering is not available in resolution bandwidths ≤ 100 Hz when SPAN 0 Hz with firmware revisions 930809 and earlier. † The video bandwidth upper limit is 450 kHz in sample detection mode.	

ManualsPlus.com

Sweep

Sweep Time	
Range	
Span = 0	
Non-Option 007 (E-Series)	
Analog display	50 µs to <30 ms
Digital display	30 ms to 6,000 s
Option 007 E-Series and all EC-Series instruments	
Digital display	50 µs to 6,000 s
Span ≥ 100 Hz	
RES BW ≥300 Hz	50 ms to 2,000 s
RES BW ≤100 Hz	50 ms to 100,000 s (span-dependent)
Accuracy (Span = 0 Hz)	
Non-Option 007 (E-Series)	
Sweep time 30 ms to 6,000 s	<±1%
Sweep time <30 ms	<±10%
Option 007 E-Series and all EC-Series instruments	
Sweep time 30 ms to 6,000 s	<±1%
Sweep time <30 ms	<±0.1%
Sweep Trigger	Delayed, Free Run, Single, Line, External, or Video#
# Video trigger is not available in RES BW settings ≤100 Hz.	

ManualsPlus.com

Delayed Sweep	
Trigger Modes	Free Run, Line, External, Video*
Range	
Span = 0	
Non-Option 007 (E-Series)	+2 µs to +65.535 ms
Option 007 E-Series and all EC-Series instruments	
Sweep time ≥ 30 ms	+2 µs to +65.535 ms
Sweep time < 30 ms	–9.9 ms to +65.535 ms[††]
Span ≥ 100 Hz	+2 µs to +65.535 ms
Resolution	1 µs
Accuracy[#]	±1 µs

* Video trigger is not available in RES BW settings ≤ 100 Hz.

[††] Negative delayed sweep (pre-trigger) is also limited to 50 × sweep time.

[#] In E-Series instruments without Option 007, the delay time will be subject to up to ±0.5 µs of jitter due to synchronization of the input edge trigger to the internal 1 MHz timebase. In E -series instruments with Option 007 and in EC-series instruments using sweeptimes <30 ms, the delay time will experience up to ±83 ns of jitter due to synchronization of the input edge trigger to the internal 12 MHz timebase.

ManualsPlus.com

Time-Gated Spectrum Analysis

Gate Delay*	**Edge Mode**	**Level Mode**
Range	3 µs to 65.535 ms	≤0.5 µs
Resolution	1 µs	
Accuracy†	<±1 µs	

* Time from GATE TRIGGER INPUT to positive edge of GATE OUTPUT.

† The gate delay time will experience up to ±0.5 µs of jitter due to synchronization of the input edge trigger to the internal 1 MHz timebase.

Gate Length*	
Range	1 µs to 65.535 ms
Resolution	1 µs
Accuracy	<±1 µs

* Time from positive edge to negative edge of GATE OUTPUT.

Marker Frequency Resolution	SPAN/600 to a minimum of 1 Hz

Marker Time Resolution	Sweep time/600

ManualsPlus.com

Amplitude Specifications

Measurement Range

Maximum Safe Input Power	
Average Continuous Power (input attenuation ≥10 dB)	+30 dBm (1 W)
Peak Pulse Power (input attenuation ≥30 dB)	+50 dBm (100 W) for pulse widths ≤10 µs and <1% duty cycle.
DC Voltage	<±0.2 V

Gain Compression	
10 MHz to 2.9 GHz (≤–5 dBm at input mixer‡)	<1.0 dB
2.9 GHz to 6.46 GHz (≤0 dBm at input mixer†)	<1.0 dB
6.46 GHz to 26.8 GHz (≤–3 dBm at input mixer)†	<1.0 dB
26.8 GHz to 40 GHz (≤0 dBm at input mixer)†	<1.0 dB m (characteristic)

‡ Mixer level = input level – input attenuation.

ManualsPlus.com

Displayed Average Noise Level With no signal at input, 1 Hz video bandwidth, and 0 dB input attenuation, tracking generator off.		
Frequency Range	**10 Hz RES BW** *(Option 103)*	**1 Hz RES BW** *(Non-Option 103)*
30 Hz	<–80 dBm	<–90 dBm
1 kHz	<–95 dBm	<–105 dBm
10 kHz	<–110 dBm	<–120 dBm
100 kHz	<–110 dBm	<–120 dBm
1 MHz to 10 MHz	<–130 dBm	<–140 dBm
10 MHz to 2.9 GHz		
serial number prefix <3641A	<–130 dBm	<–140 dBm
serial number prefix ≥3641A	<–135 dBm	<–145 dBm
Option H13	<–135 dBm	<–145 dBm
2.9 GHz to 6.46 GHz	<–137 dBm	<–147 dBm
6.46 GHz to 13.2 GHz	<–133 dBm	<–143 dBm
13.2 GHz to 22.0 GHz	<–130 dBm	<–140 dBm
22.0 GHz to 26.8 GHz	<–126 dBm	<–136 dBm
26.8 GHz to 31.15 GHz	<–129 dBm	<–139 dBm
31.15 GHz to 40 GHz	<–120 dBm	<–130 dBm*
* Refer to Resolution Bandwidth Usability.		

ManualsPlus.com

Spurious Responses		
All input-related spurious responses, except as noted below.	**Mixer Level***	**Distortion**
10 MHz to 40 GHz	–40 dBm	<(–75 + 20 log N†) dBc
Second Harmonic Distortion		
Applied Signal Frequency Range		
1 MHz to 1.45 GHz (serial number prefix <3641A)	–40 dBm	<–72 dBc
20 MHz to 1.45 GHz (serial number prefix ≥3641A)	–40 dBm	<–79 dBc
20 MHz to 1.45 GHz (Option H13)	–40 dBm	<–79 dBc
1.45 GHz to 2.0 GHz	–10 dBm	<–85 dBc
2.0 GHz to 20 GHz	–10 dBm	<–90 dBc
Third Order Intermodulation Distortion		
(with two signals at the input mixer, spaced by ≥1 kHz)*		
Frequency Range		
1 MHz to 2.9 GHz (serial number prefix <3641A)	–30 dBm each	<–78 dBc
20 MHz to 2.9 GHz (serial number prefix ≥3641A)	–30 dBm each	<–82 dBc
20 MHz to 2.9 GHz (Option H13)	–30 dBm each	<–82 dBc
2.9 GHz to 6.46 GHz	–30 dBm each	<–90 dBc
6.46 GHz to 26.8 GHz	–30 dBm each	<–75 dBc
26.8 GHz to 40 GHz (Characteristic)	*–30 dBm each*	*<–85 dBc*
Image Responses		
Frequency Range		
10 MHz to 26.8 GHz	–10 dBm	<–80 dBc
26.8 GHz to 40 GHz	–30 dBm	<–60 dBc
Multiple and Out-of-Band Responses		
Frequency Range		
10 MHz to 26.8 GHz	–10 dBm	<–80 dBc
26.8 GHz to 40 GHz	–30 dBm	<–55 dBc

* Mixer level = input level – input attenuation.

† N = harmonic mixing number

ManualsPlus.com

Residual Responses	
>200 kHz with no signal at input, 0 dB input attenuation, N† 1	<–90 dBm
† N harmonic mixing number	

Display Range

Amplitude Scale	10 vertical display divisions, with the reference level (0 dB) at the top graticule line.

Calibration	
LOG	10 dB/DIV for 100 dB display from reference level.*
	5 dB/DIV for 50 dB display expanded from reference level.†
	2 dB/DIV for 20 dB display expanded from reference level.
	1 dB/DIV for 10 dB display expanded from reference level.†
LINEAR	10% of reference level per division over the top nine divisions
	(all 10 divisions for RES BW ≤100 Hz) when calibrated in voltage.
* 10 dB/DIV for 70 dB display from reference level for RES BW ≤100 Hz when SPAN = 0 Hz.	
† In E-Series instruments these scales are not available for sweep times < 30 ms without Option 007.	

Accuracy

Reference Level Range	
LOG, adjustable in 0.1 dB steps	
Frequency Band	**Range**
30 Hz to 31.15 GHz *(Option 006)*	–120 dBm to +30 dBm
9 kHz to 31.15 GHz *(Non-Option 006)*	–120 dBm to +30 dBm
31.15 GHz to 40 GHz	–115 dBm to +30 dBm
LINEAR, settable in 1% steps	
30 Hz to 31.15 GHz *(Option 006)*	2.2 µV to 7.07 V
9 kHz to 31.15 GHz *(Non-Option 006)*	2.2 µV to 7.07 V
31.15 GHz to 40 GHz	3.98 µV to 7.07 V

ManualsPlus.com

Reference Level Uncertainty

Frequency Response		
(with 10 dB input attenuation)		
Relative (referenced to midpoint between highest and lowest peak excursions)	–10 °C to 55 °C	20 °C to 30 °C
30 Hz to 2.9 GHz *(Option 006)*	<±1.0 dB	<±0.8 dB
9 kHz to 2.9 GHz *(Non-Option 006)*	<±1.0 dB	<±0.8 dB
100 MHz to 2.0 GHz (serial number prefix ≥3641A)	<±0.9 dB	<±0.8 dB
2.9 GHz to 6.46 GHz	<±1.7 dB	<±1.4 dB
6.46 GHz to 13.2 GHz	<±2.6 dB	<±2.2 dB
13.2 GHz to 22.0 GHz	<±2.5 dB	<±2.5 dB
22.0 GHz to 26.8 GHz	<±3.3 dB	<±2.2 dB
26.8 GHz to 31.15 GHz	<±3.1 dB	<±2.9 dB
31.15 GHz to 40 GHz	<±2.6 dB	<±2.4 dB
Absolute (referenced to 300 MHz CAL OUTPUT)		
30 Hz to 2.9 GHz *(Option 006)*	<±1.5 dB	<±1.0 dB
9 kHz to 2.9 GHz *(Non-Option 006)*	<±1.5 dB	<±1.0 dB
2.9 GHz to 6.46 GHz	<±2.6 dB	<±1.8 dB
6.46 GHz to 13.2 GHz	<±3.0 dB	<±2.8 dB
13.2 GHz to 22 GHz	<±4.0 dB	<±3.5 dB
22 GHz to 26.8 GHz	<±4.5 dB	<±4.0 dB
26.8 GHz to 31.15 GHz	<±4.0 dB	<±3.0 dB
31.15 GHz to 40 GHz	<±4.0 dB	<±3.2 dB

Band Switching Uncertainty	
(Additional uncertainty added to Relative Frequency Response for measurements between any two bands)	<±1.0 dB

Calibrator Uncertainty	
–10 dBm, 300 MHz	<±0.3 dB

ManualsPlus.com

Input Attenuator Switching Uncertainty	
(20 to 70 dB settings, referenced to 10 dB attenuation)	
Frequency Range	
9 kHz to 2.9 GHz	<±0.6 dB/10 dB step, ±1.8 dB max.
30 Hz to 2.9 GHz *(Option 006)*	<±0.6 dB/10 dB step, ±1.8 dB max.

IF Gain Uncertainty	
(0 dBm to –80 dBm reference levels with 10 dB input attenuation)	<±1.0 dB

Resolution Bandwidth Switching Uncertainty	
(Referenced to 300 kHz resolution bandwidth at the reference level.)*	<±0.5 dB

* Scale fidelity is not the same for RES BW ≤100 Hz as for RES BW ≥300 Hz. Therefore, signals not at the reference level will experience an additional amplitude difference when switching between these two sets of RES BW settings, due to differences in scale fidelity.

ManualsPlus.com

Pulse Digitization Uncertainty	
(Pulse response mode, PRF >720/sweep time)	
LOG	
Resolution Bandwidth ≤ 1 MHz	<1.25 dB peak-to-peak
Resolution Bandwidth = 2 MHz	<3 dB peak-to-peak
LINEAR	
Resolution Bandwidth ≤ 1 MHz	<4% of reference level peak-to-peak
Resolution Bandwidth = 2 MHz	<12% of reference level peak-to-peak

IF Alignment Uncertainty	
(additional uncertainty when using 300 Hz RES BW only)	<±0.5 dB

ManualsPlus.com

Scale Fidelity*	
LOG	
Incremental	
0 to –90 dB range†	
RES BW ≥ 300 Hz	<±0.1 dB/dB
RES BW ≤ 100 Hz	<±0.2 dB/2 dB
Cumulative	
0 to –90 dB range†	
RES BW ≥ 300 Hz	<±0.1 dB/dB from the reference level to a maximum of ±0.85 dB
RES BW ≤ 100 Hz	<±0.2 dB/2 dB from the reference level to a maximum of ±0.85 dB
0 to –100 dB range†	
RES BW ≥ 300 Hz	±2.5 dB *characteristic*
RES BW ≤ 100 Hz	maximum of ±1.5 dB
LINEAR	<±3% of reference level

* Scale fidelity is not the same for RES BW ≤100 Hz as for RES BW ≥ 300 Hz. Therefore, signals not at the reference level will experience an additional amplitude difference when switching between these two sets of RES BW settings due to the differences in scale fidelity.

† 0 to –70 dB range for RES BW ≤100 Hz when SPAN = 0 Hz.

Marker Amplitude Resolution*		
	(Sweep time ≥ 30 ms)	
Scale:	LOG 10 dB/DIV	(1/6) dB
	LOG 5 dB/DIV	(1/12) dB
	LOG 2 dB/DIV	(1/30) dB
	LOG 1 dB/DIV	(1/60) dB
	LINEAR	Reference Level/600

* In E-Series instruments without Option 007 markers are not available for sweep times < 30 ms with RES BW ≥ 300 Hz. For Option 007, see the characteristics section.

ManualsPlus.com

Inputs and Outputs Specifications

CAUTION Any electrostatic discharge according to IEC 801-2/1991 to the center pins of any of the connectors may cause damage to the associated circuitry.

IF INPUT	
Connector	SMA female, front panel
Input level for full-screen deflections (external mixing mode, 0 dBm reference level, 30 dB conversion loss)	–30 dBm ± 1.5 dB

GPIB	
Connector	IEEE-488 bus connector
Interface Functions	SH1, AH1, T6, TE0, L4, LE0, SR1, RL1, PP1, DC1, DT1, C1, C28
Direct Plotter Output	Supports Agilent 7225A, Agilent 7440A, Agilent 7470A, Agilent 7475A, Agilent 7550A
Direct Printer Output	Supports HP 3630A PaintJet, HP 2225A ThinkJet

CAL OUTPUT	
Connector	BNC female, front panel
Frequency	300 MHz ±(300 MHz × frequency reference accuracy†)
Amplitude	–10 dBm ±0.3 dB

† Frequency Reference Accuracy = (aging × period of time since adjustment + initial achievable accuracy + temperature stability).

1ST LO OUTPUT	
Connector	SMA female, front panel
Amplitude	+16.5 dBm ±2.0 dB

10 MHz REF IN/OUT	
Connector	BNC female, rear panel
Output Frequency	10 MHz ±(10 MHz × frequency reference accuracy†)

† Frequency Reference Accuracy = (aging × period of time since adjustment + initial achievable accuracy + temperature stability).

ManualsPlus.com

General Specifications

Environmental Specifications	
Military Specification per MIL-T-28800, Type III, Class 3, Style B (EC)/ Style C (E), as follows:	
Calibration Interval	2 years
Warmup	5 minutes from ambient conditions*
Temperature	
Operating	–10 °C to +55 °C (E) / 0 °C to +55 °C (EC)
Non-operating	–51 °C to +71 °C
Humidity	95% at 40 °C for 5 days
Altitude	
Operating	15,000 feet
Non-operating	50,000 feet
Rain resistance	Drip-proof at 16 liters/hour/square foot
Vibration	
5 to 15 Hz	0.060 inch peak-to-peak excursion
16 to 25 Hz	0.040 inch peak-to-peak excursion
26 to 55 Hz	0.020 inch peak-to-peak excursion
Pulse Shock	
Half Sine	30 g for 11 ms duration
Transit Drop	8 inch drop on 6 faces and 8 corners
Power Main	Voltage fluctuations within the range specified in the spectrum analyzer “Power Requirements.”
Power Main	Operating environment within the limits of installation category II according to IEC 1010.
Pollution	Operating environment within the limits of pollution degree 2 according to IEC 664.

* Two hours for conditions of internal condensation, 30 minutes to meet frequency response specifications without preselector peaking. When operating outside the 20 °C to 30 °C ambient temperature range, preselector peaking is always required to meet frequency response specifications.

ManualsPlus.com

Electromagnetic Compatibility	
	Conducted and radiated interference is in compliance with CISPR, Publication 11 (1990).
Military Specification	Meets the requirements of MIL-STD-461C, Part 2, with the exceptions shown below:
Conducted Emissions	
CE01 (Narrowband)	1 kHz to 15 kHz only
CE03 (Narrowband)	Full limits
CE03 (Broadband)	20 dB relaxation from 15 kHz to 100 kHz
Conducted Susceptibility	
CS01	Full Limits
CS02	Full Limits with 40 dB relaxation at IF frequencies. Refer also to “Radiated Immunity” in Amplitude Characteristics.
CS06	Full Limits
Radiated Emissions	
RE01	Test probe at 15 cm, front and rear panel search excluded.
RE02	Full limits to 1 GHz
Radiated Susceptibility	
RS03	Limited to 3 V/m from 14 kHz to 1 GHz with 40 dB relaxation at IF frequencies. Refer also to “Radiated Immunity” in Amplitude Characteristics.

ManualsPlus.com

Power Requirements	
115 Vac Operation	
Voltage	90 V to 140 V rms
Current	3.2 A rms maximum
Frequency	47 Hz to 440 Hz
230 Vac Operation	
Voltage	180 V to 250 V rms
Current	1.8 A rms maximum
Frequency	47 Hz to 66 Hz
Maximum Power Dissipation	180 W

Audible Noise	<5.0 Bels, 20 °C to 30 °C (ISO DP7779)

Weight	20 kg (44 lb)

ManualsPlus.com

Dimensions

With Handle and Front Cover:

(A) 202 mm (7-15/16 in) high

(C) 366 mm (14-7/16 in) wide

(F) 503 mm (19-13/16 in) deep

Without Handle and Front Cover:

(B) 187 mm (7-3/8 in) high

(D) 337 mm (13-1/4 in) wide

(E) 461 mm (18-1/8 in) deep

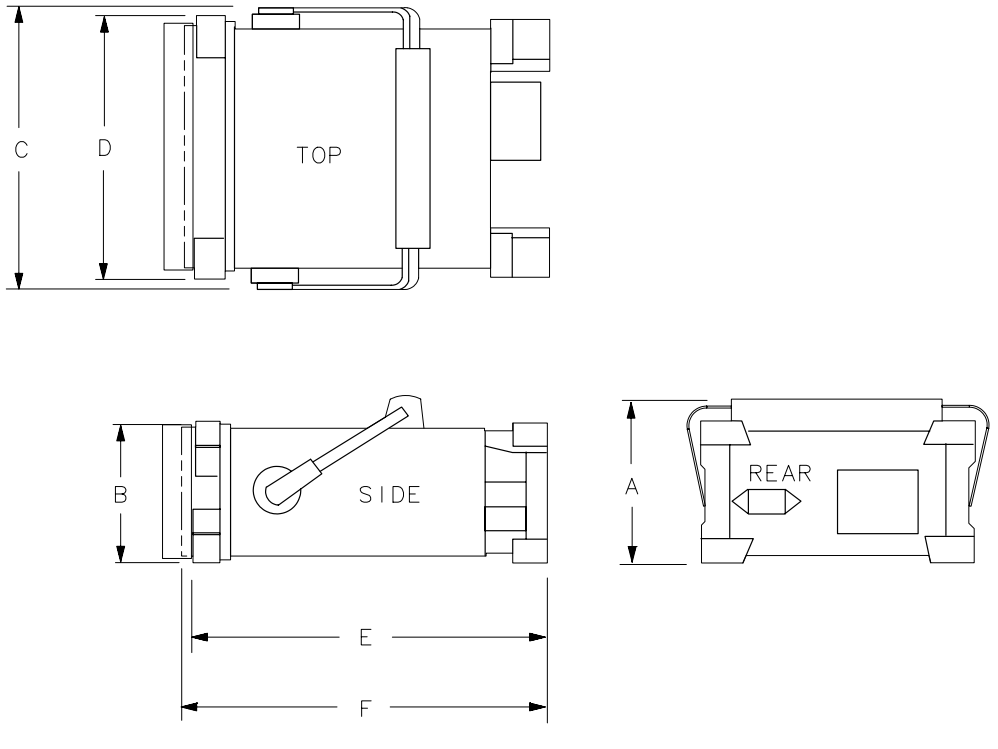

ManualsPlus.com

Frequency Characteristics

These are not specifications. Characteristics provide useful information about instrument performance.

Frequency Reference Accuracy	
Non-Option 103	
Initial Achievable Accuracy	$<\pm 2.2 \times 10^{-8}$
(includes gravitational sensitivity, retrace, and settability)	
Daily Aging (average over 7 days after being powered on for 7 days)	$<\pm 5 \times 10^{-10}$
Warmup	
(Internal frequency reference selected)	
After 5 minutes	$<\pm 1 \times 10^{-7}$ of final frequency* (0 °C to +55 °C) $<\pm 1 \times 10^{-6}$ of final frequency* (–10 °C)
After 15 minutes	$<\pm 1 \times 10^{-8}$ of final frequency* (–10 °C to +55 °C)
Option 103	
Initial Achievable Accuracy	$<\pm 1 \times 10^{-6}$

* Final frequency is defined as frequency 60 minutes after power-on with analyzer set to internal frequency reference.

Bandwidth Selectivity	
RES BW ≤100 Hz	<4.5:1
RES BW = 1 MHz	<8:1
RES BW = 2 MHz	<5.5:1

ManualsPlus.com

Impulse Bandwidth	
RES BW 2 MHz	2.93 MHz ±10%
RES BW 1 MHz	1.60 MHz ±7%
RES BW 300 kHz	491 kHz ±7%
300 Hz ≤ RES BW ≤ 100 kHz	1.62 × RES BW ± 10%

Stability	
Noise Sidebands	
For frequencies ≤ 1 GHz, 100 kHz offset from carrier, and frequency span > 2 MHz	≤121 dBc/Hz

ManualsPlus.com

Figure 6-1 Noise Sidebands Normalized to 1 Hz BW versus Offset from Carrier

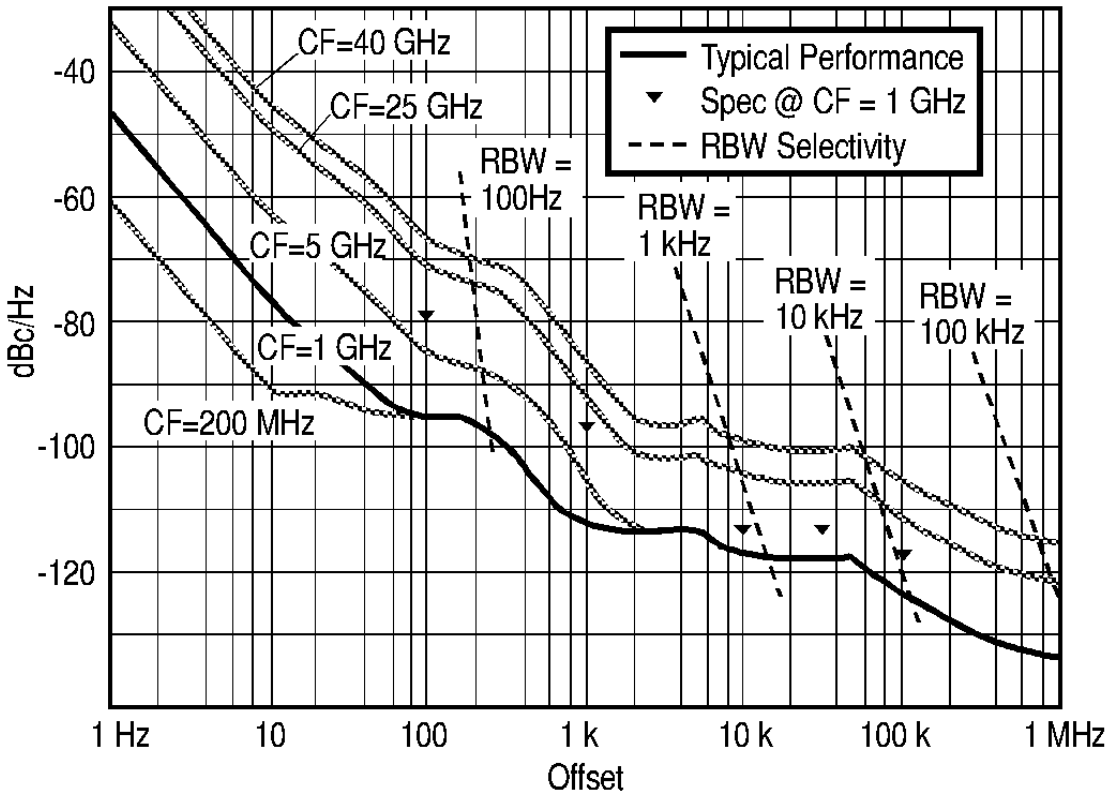

Figure 6-2 Typical On-Screen Dynamic Range vs. Offset from 1 GHz Center Freq. for all RBW's

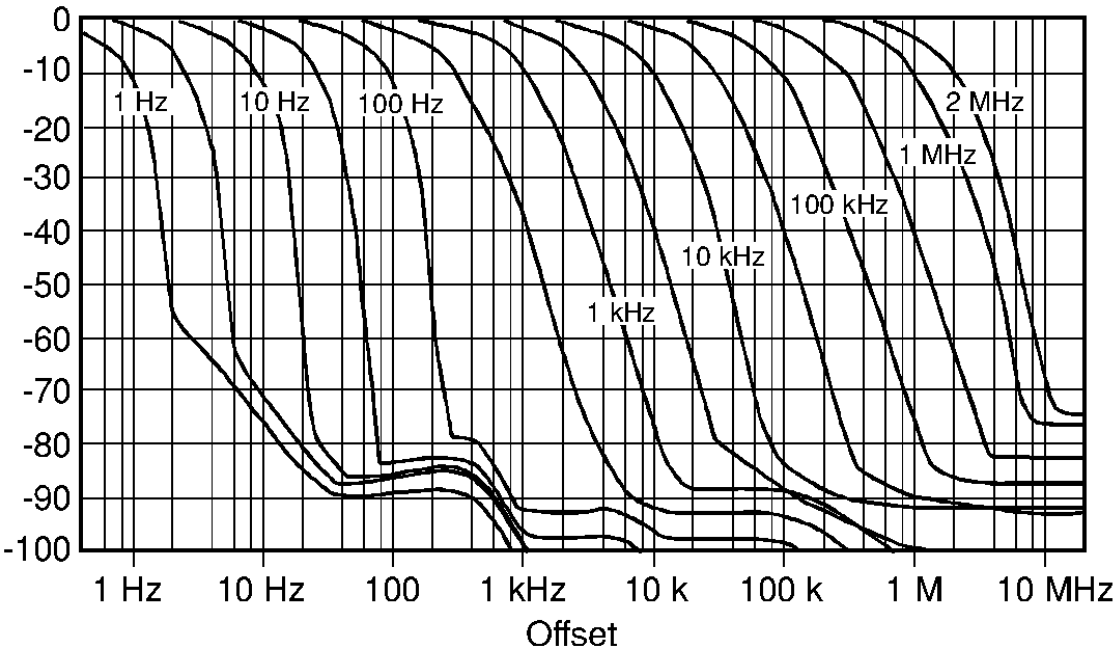

ManualsPlus.com

Sweep

Sweep Time Accuracy	
Span ≥100 Hz	<±15%

Resolution Bandwidth Usability* ***(Non-Option 103)***			
RES BW	**Maximum Usable Frequency**		
	Video Average OFF	**Video Average ON, 10 Video Averages**	
		Source/Spectrum Analyzer Frequency References	
		Locked†	**Independent‡**
≥30 Hz	>40 GHz	>40 GHz	>40 GHz
10 Hz	>40 GHz	>40 GHz	>15 GHz
3 Hz	>40 GHz	>40 GHz	2 GHz
1 Hz	>40 GHz	>40 GHz	200 MHz

* Resolution Bandwidth Usability is the maximum usable frequency for a given resolution bandwidth. The maximum usable frequency is limited by signal instability resulting from spectrum analyzer residual FM during the measurement interval. Measurements at frequencies less than the maximum usable frequency will have a typical amplitude uncertainty of less than 1 dB. These characteristics apply after a 30 minute warmup.

† Source and spectrum analyzer share the same frequency reference.

‡ Source and spectrum analyzer do not share the same frequency reference.

ManualsPlus.com

Amplitude Characteristics

Dynamic Range

Figure 6-3 Nominal Dynamic Range

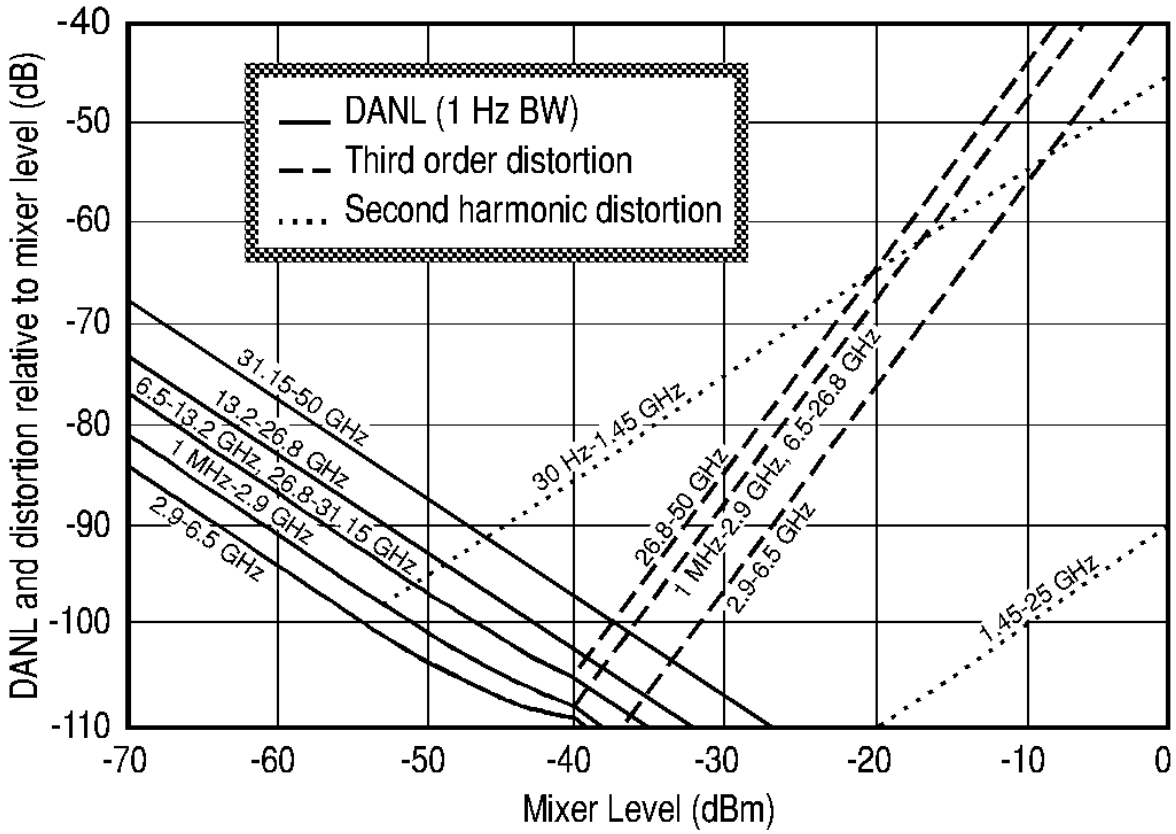

Amplitude Measurement Range

Spurious Responses	Frequency Range	Distortion
(all input related spurious responses <1 kHz from the carrier)	10 MHz to 2.9 GHz	<–55 dBc

ManualsPlus.com

Amplitude Accuracy

Band-to-Band Frequency Response (dB)

Frequency response uncertainty for measurements between any two internal mixing bands. Equivalent to the sum of the two Relative Frequency Response values plus Band Switching Uncertainty.

Band 0. 30 Hz to 2.9 GHz

Band 1. 2.9 GHz to 6.46 GHz

Band 2. 6.46 GHz to 13.2 GHz

Band 3A. 13.2 GHz to 22 GHz

Band 3B. 22 GHz to 26.8 GHz

Band 4. 26.8 GHz to 31.15 GHz

Band 5. 31.15 GHz to 40 GHz

Band-to-Band Frequency Response, 20 °C to 30 °C (dB peak-to-peak)

	Band 0	Band 1	Band 2	Band 3A	Band 3B	Band 4	Band 5
Band 0	n/a	3.2 dB	4.0 dB	4.3 dB	4.0 dB	4.7 dB	4.2 dB
Band 1	3.2 dB	n/a	4.6 dB	4.9 dB	4.6 dB	5.3 dB	4.8 dB
Band 2	4.0 dB	4.6 dB	n/a	5.7 dB	5.4 dB	6.1 dB	5.6 dB
Band 3A	4.3 dB	4.9 dB	5.7 dB	n/a	5.7 dB	6.4 dB	5.9 dB
Band 3B	4.0 dB	4.6 dB	5.4 dB	5.7 dB	n/a	6.1 dB	5.6 dB
Band 4	4.7 dB	5.3 dB	6.1 dB	6.4 dB	6.1 dB	n/a	6.3 dB
Band 5	4.2 dB	4.8 dB	5.6 dB	5.9 dB	5.6 dB	6.3 dB	n/a

Band-to-Band Frequency Response, –10 °C to 55 °C (dB peak-to-peak)

	Band 0	Band 1	Band 2	Band 3A	Band 3B	Band 4	Band 5
Band 0	n/a	3.7 dB	4.6 dB	4.5 dB	5.3 dB	5.1 dB	4.6 dB
Band 1	3.7 dB	n/a	5.3 dB	5.2 dB	6.0 dB	5.8 dB	5.3 dB
Band 2	4.6 dB	5.3 dB	n/a	6.1 dB	6.9 dB	6.7 dB	6.2 dB
Band 3A	4.5 dB	5.2 dB	6.1 dB	n/a	6.8 dB	6.6 dB	6.1 dB
Band 3B	5.3 dB	6.0 dB	6.9 dB	6.8 dB	n/a	7.4 dB	6.9 dB
Band 4	5.1 dB	5.8 dB	6.7 dB	6.6 dB	7.4 dB	n/a	6.7 dB
Band 5	4.6 dB	5.3 dB	6.2 dB	6.1 dB	6.9 dB	6.7 dB	n/a

ManualsPlus.com

Input Attenuator Repeatability	<±0.2 dB

Input Attenuator Accuracy	
2.9 GHz to 18 GHz	<±1.5 dB/10 dB step, ±3.0 dB max.
18 GHz to 26.8 GHz	<±3.0 dB/10 dB step, ±6.0 dB max.
26.8 GHz to 40 GHz	<±3.0 dB/10 dB step, ±6.0 dB max.

Pulse Digitization Uncertainty	
(Pulse response mode, PRF >720/sweep time)	
Standard Deviation	<0.2 dB

ManualsPlus.com

	Marker Amplitude Resolution	
	(EC-Series instruments and E-Series instruments with Option 007, sweep time < 30 ms, zero span)	
Scale:	LOG 10 dB/DIV	≤ (1/2) dB
	LOG 5 dB/DIV	≤ (1/4) dB
	LOG 2 dB/DIV	≤ (1/10) dB
	LOG 1 dB/DIV	≤ (1/20) dB
	LINEAR	≤ Reference Level/200

Demodulation

Spectrum Demodulation	
Modulation Type	AM and FM (5 kHz peak deviation)
Audio Output	Internal speaker and phone jack with volume control.
Pause Time at Marker Frequency	100 ms to 60 s

Radiated Immunity

Radiated Immunity
When tested at 3 V/m according to IEC 801-3/1984 the displayed average noise level will be within specifications over the full immunity test frequency range of 27 to 500 MHz except that at the immunity test frequency of 310.7 MHz ± selected resolution bandwidth the displayed average noise level may be up to –80 dBm. When the analyzer tuned frequency is identical to the immunity test signal frequency there may be signals of up to –90 dBm displayed on the screen.

ManualsPlus.com

Inputs and Outputs Characteristics

CAUTION Any electrostatic discharge according to IEC 801-2/1991 to the center pins of any of the connectors may cause damage to the associated circuitry.

INPUT 50Ω	
Connector	Precision 2.4mm Male, front panel
Impedance	50 Ω
VSWR (at tuned frequency)	
	<1.5:1 for <2.9 GHz and ≥10 dB Input Attenuation
	<2.3:1 for <2.9 GHz and ≥10 dB Input Attenuation
LO Emission Level* (average)	
10 dB Input Attenuation	<–80 dBm
* Level of 1st LO, 3.0 to 6.8 GHz, present at INPUT 50Ω connector.	

IF INPUT *(Deleted on Option 002 and Option 327)*	
(2nd IF input for use with external mixers)	
Connector	SMA female, front panel
Impedance (dc coupled)	50 Ω
Frequency	310.7 MHz
Noise Figure	7 dB
1 dB Gain Compression Level	–23 dBm
Full Screen Level	–30 dBm
(Gain Compression and Full Screen Levels apply with 30 dB conversion loss setting and 0 dBm reference level.)	

1ST LO OUTPUT	
Connector	SMA female, front panel
Impedance	50 Ω
Frequency Range	3.0000 GHz to 6.8107 GHz†
† 3.8107 GHz to 6.8107 GHz for analyzers equipped with Option 002.	

ManualsPlus.com

CAL OUTPUT	
Connector	BNC female, front panel
Impedance	50 Ω

10 MHz REF IN/OUT	
Connector	BNC female, rear panel
Impedance	50 Ω
Output Amplitude	0 dBm
Input Frequency	10 MHz × $(1 \pm 2 \times 10^{-5})$
Input Amplitude	–2 to +10 dBm
External Reference Phase Noise	
Analyzer noise sideband performance will not be degraded if the external reference phase noise is within the limits given below.	
Non-Option 103	<–135 dBc/Hz at 100 Hz offset
Option 103	<–110 dBc/Hz at 100 Hz offset

VIDEO OUTPUT*	
Connector	BNC female, rear panel
Impedance (dc coupled)	50 Ω
Amplitude (RES BW ≥300 Hz)	0 to +1 V full scale
Scaling	
RES BW ≥300 Hz	linear or log 100 dB/V
RES BW ≤100 Hz	4.8 kHz, auto-ranged level with dc offset

* The VIDEO OUTPUT is a video signal for RES BW ≥300 Hz with switching transients and IF ADJ signals between sweeps. For RES BW ≤100 Hz the output is an IF signal with transients and IF ADJ signals between and during sweeps.

ManualsPlus.com

LO SWP|FAV OUTPUT and LO SWP|0.5 V/GHz OUTPUT*	
Connector	BNC female, rear panel
Impedance (dc coupled)	120 Ω
LO SWP OUTPUT (no load)	0 to + 10 V
0.5 V/GHz OUTPUT	
Internal Mixer Mode	0.5 V/GHz of tuned frequency (no load)
External Mixer Mode	([(1.5 V/GHz) × LO frequency)] – 0.2054 V) ±50 mV
0.25 V/GHz OUTPUT†	0.25 V/GHz of tuned frequency (no load)

* This connector is labeled `LO SWP|0.5 V/GHz OUTPUT` on older spectrum analyzers and `LO SWP|FAV OUTPUT` on newer spectrum analyzers.

† The 0.25 V/GHz output is available only in the 8564E/EC and 8565E/EC.

BLKG/GATE OUTPUT	
Connector	BNC female, rear panel
Impedance	50 Ω
Blanking Mode	
Amplitude during sweep	Low TTL Level
Amplitude during retrace	High TTL Level
Gate Mode	
Gate On	High TTL level
Gate Off	Low TTL level

EXT/GATE TRIG INPUT	
Connector	BNC female, rear panel
Impedance	10 kΩ
Trigger Level	Settable to high TTL, or low TTL, or edge triggered TTL

PROBE POWER (front panel)	
Voltage	+15 V dc, –12.6 V dc
Current	150 mA maximum, each

ManualsPlus.com

EARPHONE	
Connector	1/8 inch miniature monophonic jack, rear panel
Power Output	0.2 W into 4 Ω

2ND IF OUT			
(*Option 001 instruments only*)			
Connector	SMA female, rear panel		
Impedance	50 Ω		
Frequency	310.7 MHz		
Frequency Range	**3 dB BW**	**Noise Figure**	**Conversion Gain**
10 kHz to 2.9 GHz			
serial number prefix <3641A	>28 MHz	25 dB	–6 dB
serial number prefix ≥3641A	>28 MHz	20 dB	1 dB
2.9 GHz to 6.5 GHz	>30 MHz	22 dB	–3 dB
6.5 GHz to 13.2 GHz	>30 MHz	26 dB	–7 dB
13.2 GHz to 22 GHz	>30 MHz	30 dB	–11 dB
22 GHz to 26.8 GHz	>30 MHz	32 dB	–13 dB
26.8 GHz to 31.15 GHz	>28 MHz	24 dB	–14 dB
31.15 GHz to 40 GHz	>28 MHz	34 dB	–14 dB

ALT SWEEP OUT	
(Option 005 analyzers only)	
Connector	BNC female, rear panel
Impedance	100 Ω

ManualsPlus.com

Regulatory Information

The following information applies to the 8564EC spectrum analyzer.

Manufacturer's Name: Agilent Technologies, Inc.

Manufacturer's Address: 1400 Fountaingrove Parkway
Santa Rosa, CA 95403-1799
USA

Declares that the products

Product Name: Spectrum Analyzer

Model Number: 8560EC, 8561EC, 8562EC, 8563EC, 8564EC, 8565EC

Product Options: This declaration covers all options of the above products.

Conform to the following product specifications:

EMC: IEC 61326-1:1997+A1:1998 / EN 61326-1:1997+A1:1998

Standard	Limit
CISPR 11:1990 / EN 55011-1991	Group 1, Class A
IEC 61000-4-2:1995+A1998 / EN 61000-4-2:1995	4 kV CD, 8 kV AD
IEC 61000-4-3:1995 / EN 61000-4-3:1995	3 V/m, 80 - 1000 MHz
IEC 61000-4-4:1995 / EN 61000-4-4:1995	0.5 kV sig., 1 kV power
IEC 61000-4-5:1995 / EN 61000-4-5:1996	0.5 kV L-L, 1 kV L-G
IEC 61000-4-6:1996 / EN 61000-4-6:1998	3 V, 0.15 – 80 MHz
IEC 61000-4-11:1994 / EN 61000-4-11:1998	1 cycle, 100%

Safety: IEC 61010-1:1990 + A1:1992 + A2:1995 / EN 61010-1:1993 +A2:1995
CAN/CSA-C22.2 No. 1010.1-92

Supplementary Information:
The products herewith comply with the requirements of the Low Voltage Directive 73/23/EEC and the EMC Directive 89/336/EEC and carry the CE-marking accordingly.

Santa Rosa, CA, USA 18 Jan. 2000

Greg Pfeiffer/Quality Engineering Manager

For further information, please contact your local Agilent Technologies sales office, agent or distributor.

ManualsPlus.com

The following information applies to the 8564E spectrum analyzer.

DECLARATION OF CONFORMITY

According to ISO/IEC Guide 22 and CEN/CENELEC EN 45014

Manufacturer's Name: Agilent Technologies, Inc.

Manufacturer's Address: 1400 Fountaingrove Parkway
Santa Rosa, CA 95403-1799
USA

Declares that the products

Product Name: Spectrum Analyzer

Model Number: 8560E, 8560EL, 8561E, 8562E, 8562EL, 8563E, 8564E, 8565E

Product Options: This declaration covers all options of the above products.

Conform to the following product specifications:

	Standard	Limit
EMC:	CISPR 11:1990 / EN 55011-1991	Group 1, Class A
	IEC 801-2:1984/EN 50082-1:1992	4 kV CD, 8 kV AD
	IEC 801-3:1984/EN 50082-1:1992	3 V/m, 80 - 1000 MHz
	IEC 801-4:1988/EN 50082-1:1992	0.5 kV sig., 1 kV power

Safety: IEC 61010-1:1990 + A1:1992 + A2:1995 / EN 61010-1:1993 +A2:1995
CAN/CSA-C22.2 No. 1010.1-92

Supplementary Information:
The products herewith comply with the requirements of the Low Voltage Directive 73/23/EEC and the EMC Directive 89/336/EEC and carry the CE-marking accordingly.

Santa Rosa, CA, USA 1 Nov. 2000

Greg Pfeiffer/Quality Engineering Manager

For further information, please contact your local Agilent Technologies sales office, agent or distributor.

ManualsPlus.com

Notice for Germany: Noise Declaration

LpA < 70 dB am Arbeitsplatz (operator position) normaler Betrieb (normal position) nach DIN 45635 T. 19 (per ISO 7779)

CE: European Community

The product design was approved for the European Community.

ISM1-A: Industrial Scientific and Medical Group 1, Class A

The instrument meets the requirements of CISPER 11, Clause 4.

CSA: Canadian Standards Association

The CSA mark is a registered trademark of the Canadian Standards Association. The product meets the requirements.

IEC: International Electrotechnical Commission

This instrument has been designed and tested in accordance with IEC Publication 1010, Safety Requirements for Electronic Measuring Apparatus, and has been supplied in a safe condition. The instruction documentation contains information and warnings which must be followed by the user to ensure safe operation and to maintain the instrument in a safe condition.

This product conforms to Enclosure Protection IP 2 0 according to IEC-529. The enclosure protects against finger access to hazardous parts within the enclosure; the enclosure does not protect against the entrance of water.

ManualsPlus.com

7 8565E/EC Specifications and Characteristics

ManualsPlus.com

Specifications and Characteristics

The following tables list the spectrum analyzer specifications.

Unless stated otherwise, all specifications describe the analyzer warranted performance under the following conditions:

- Five-minute warmup for ambient conditions
- Autocoupled controls
- Preselector peaked at the signal of interest
- Digital trace display
- IF ADJ ON
- REF LVL CAL adjusted
- 1ST LO OUTPUT terminated in 50 ohms
- 2ND IF OUTPUT terminated in 50 ohms
- One-year calibration cycle (See “Calibration Cycle” below.)
- Environmental requirements met

After a 30-minute warmup at a temperature between 20 °C and 30 °C, the preselector does not have to be peaked at each signal of interest. Factory preselector-peak values are sufficient to meet all specifications.

NOTE REF LVL ADJ uses the CAL OUTPUT signal to calibrate the reference level. How often this adjustment should be performed depends on internal temperature changes. Amplitude temperature drift is a nominal 1 dB/10 °C. The nominal temperature drift is 10 °C, most of which occurs during the first 30 minutes after power-on. Internal temperature equilibrium is reached after 2 hours of operation at a stable ambient temperature.

Characteristics provide useful information in the form of typical, nominal, or approximate values for analyzer performance. Tables of the spectrum analyzer characteristics follow the specifications.

ManualsPlus.com

Calibration Cycle

The performance tests located in Chapter 2 should be used once every year to check the analyzer against the specifications listed in this chapter.

The frequency reference needs to be adjusted as well as checked at the same time. Refer to the 10 MHz Frequency Reference Adjustment in the *Agilent Technologies 8564E/EC and Agilent Technologies 8565E/EC Spectrum Analyzers Service Guide*.

ManualsPlus.com

Frequency Specifications

Frequency Range			
Internal Mixing			
Non-Option 006	9 kHz to 50 GHz		
Option 006	30 Hz to 50 GHz		
Internal Mixing Bands	**Frequency Range**	**Harmonic Mixing Mode N***	
Band 0 *Non-Option 006*	9 kHz to 2.9 GHz	1–	
Band 0 *Option 006*	30 Hz to 2.9 GHz	1–	
Band 1	2.75 GHz to 6.46 GHz	1–	
Band 2	5.86 GHz to 13.2 GHz	2–	
Band 3	12.4 GHz to 26.8 GHz	4–	
Band 4	26.4 GHz to 31.15 GHz	4+	
Band 5	31.0 GHz to 50 GHz	8–	
External Mixing	18 GHz to 325 GHz		
External Mixing Bands			
Frequency Band	**Frequency Range**	**Harmonic Mixing Mode (N*)**	
		Preselected	**Unpreselected**
K	18.0 to 26.5	n/a	6–
A	26.5 to 40.0	8+	8–
Q	33.0 to 50.0	10+	10–
U	40.0 to 60.0	10+	10–
V	50.0 to 75.0	14+	14–
E	60.0 to 90.0	n/a	16–
W	75.0 to 110.0	18+	18–
F	90.0 to 140.0	n/a	24–
D	110.0 to 170.0	n/a	30–
G	140.0 to 220.0	n/a	36–
Y	170.0 to 260.0	n/a	44–
J	220.0 to 325.0	n/a	54–

* N is the harmonic mixing mode. For negative mixing modes (as indicated by the "–"), the desired 1st LO harmonic is higher than the tuned frequency by the 1st IF. For positive mixing modes, (as indicated by the "+"), the desired LO Harmonic is lower than the tuned frequency by the 1st IF. The 1st IF is 3.9107 GHz for internal mixing bands 0, 4, and 5, and 310.7 MHz for all other internal mixing bands and all external mixing bands.

ManualsPlus.com

Frequency Readout Accuracy	
Accuracy of START, CENTER, STOP or MARKER frequency	
SPAN > 2 MHz × N*	<±(frequency readout × frequency reference accuracy† + 5% of frequency span + 15% of resolution bandwidth + 10 Hz)
SPAN ≤ 2 MHz × N*	<±(frequency readout × frequency reference accuracy† + 1% of frequency span + 15% of resolution bandwidth + 10 Hz)

* N is the harmonic mixing mode.

† frequency reference accuracy = (aging × period of time since adjustment) + initial achievable accuracy + temperature stability.

Frequency Count Marker	
Frequency Count Marker Resolution	Selectable from 1 Hz to 1 MHz
Frequency Count Marker Accuracy (for signal-to-noise ratio ≥25 dB)	<±(marker frequency × frequency reference accuracy‡ + 2 Hz × N† + 1 LSD)
Delta Frequency Count Accuracy (for signal-to-noise ratio ≥25 dB)	<±(delta frequency × frequency reference accuracy‡ + 4 Hz × N† + 2 LSD)

† N is the harmonic mixing mode.

‡ Frequency Reference Accuracy = (aging × period of time since adjustment + initial achievable accuracy + temperature stability).

ManualsPlus.com

Frequency Reference Accuracy	
Non-Option 103	
Aging	$<\pm 0.5 \times 10^{-9}$/day (after 7 day warmup)
	$<\pm 1 \times 10^{-7}$/year
Temperature Stability	$<\pm 1 \times 10^{-8}$, –10 °C to +55 °C, referenced to 25 °C
Option 103	
Aging	$<\pm 2 \times 10^{-6}$/year
Settability	$<\pm 1 \times 10^{-6}$
Temperature Stability	$<\pm 1 \times 10^{-6}$, –10 °C to +55 °C, referenced to 25 °C

ManualsPlus.com

Stability

Residual FM

(zero span, 10 Hz RES BW)

Non-Option 103	< 1.0 Hz × N* peak-to-peak in 20 ms†
Option 103	< 10 Hz × N* peak-to-peak in 20 ms

Noise Sidebands

For Frequencies ≤1 GHz

(Refer to the characteristics section for frequencies > 2.9 GHz)

Offset	**Non-Option 103**	**Option 103**
100 Hz		
serial number prefix <3510A	<–80 dBc/Hz‡	<–70 dBc/Hz‡
serial number prefix ≥3510A	<–88 dBc/Hz‡	<–70 dBc/Hz‡
1 kHz	<–97 dBc/Hz‡	<–90 dBc/Hz‡
10 kHz**	<–113 dBc/Hz§	<–113 dBc/Hz§
100 kHz††		
serial number prefix <3510A	<–116 dBc/Hz#	<–116 dBc/Hz#
serial number prefix ≥3510A	<–117 dBc/Hz#	<–117 dBc/Hz#

* N is the harmonic mixing mode.

† See Resolution Bandwidth Usability in “Frequency Characteristics” for further information.

‡ Add 5.2 dB × (f/1 GHz) –1) for f > 1 GHz and f ≤ 2.9 GHz.

§ Add 2.5 dB × (f/1 GHz) –1) for f > 1 GHz and f ≤ 2.9 GHz.

#Add 3.0 dB × (f/1 GHz) –1) for f > 1 GHz and f ≤ 2.9 GHz.

**Add 2.0 dB for frequencies > 1 GHz and ≤ 2.9 GHz

†† For resolution bandwidth ≤ 1 kHz or frequency span ≤ 745 kHz.

‡‡ For resolution bandwidth ≥ 3 kHz or frequency span > 745 kHz.

ManualsPlus.com

Frequency Span	
Range	
Internal Mixing	0 Hz, 100 Hz to 13.2 GHz over the 10-division display horizontal axis, variable in approximately 1% increments, or in a 1, 2, 5 sequence.
External Mixing†	Minimum span = 100 Hz × N*
Accuracy	
SPAN > 2 MHz × N*	<±5%
SPAN ≤ 2 MHz × N*	<±1%

* N is the harmonic mixing mode.

† Resolution bandwidths ≤100 Hz are not available in external mixing. External mixing is not available for Option 002 or Option 327.

ManualsPlus.com

Resolution Bandwidths (–3 dB)	
Range*	
Non-Option 103	1 Hz to 1 MHz (selectable in a 1, 3, 10 sequence) and 2 MHz (3 MHz at –6 dB)
Option 103	10 Hz to 1 MHz (selectable in a 1, 3, 10 sequence) and 2 MHz (3 MHz at –6 dB)
Accuracy	
1 Hz to 300 kHz RES BW	<±10%
1 MHz RES BW	<±25%
2 MHz RES BW	<+50%, –25%
Selectivity (60 dB/3 dB bandwidth ratio)	
RES BW ≥300 Hz	<15:1
RES BW ≤100 Hz	<5:1
Bandwidth Shape	
1 and 2 MHz RES BW	Approximately Gaussian
300 Hz to 300 kHz RES BW	Synchronously tuned, 4-pole filters
1 Hz to 100 Hz RES BW	Digital, approximately Gaussian
* Resolution bandwidths ≤100 Hz are not available in external mixing.	

Video Bandwidth	
(Post-detection low-pass filter averages displayed noise for a smooth trace.)*	
Range	1 Hz to 3 MHz† in a 1, 3, 10 sequence
* Video bandwidth filtering is not available in resolution bandwidths ≤ 100 Hz when SPAN 0 Hz with firmware revisions 930809 and earlier. † The video bandwidth upper limit is 450 kHz in sample detection mode.	

ManualsPlus.com

Sweep

Sweep Time	
Range	
Span = 0	
Non-Option 007 (E-Series)	
Analog display	50 µs to <30 ms
Digital display	30 ms to 6,000 s
Option 007 E-Series and all EC-Series instruments	
Digital display	50 µs to 6,000 s
Span ≥ 100 Hz	
RES BW ≥300 Hz	50 ms to 2,000 s
RES BW ≤100 Hz	50 ms to 100,000 s (span-dependent)
Accuracy (Span = 0 Hz)	
Non-Option 007 (E-Series)	
Sweep time 30 ms to 6,000 s	<±1%
Sweep time <30 ms	<±10%
Option 007 E-Series and all EC-Series instruments	
Sweep time 30 ms to 6,000 s	<±1%
Sweep time <30 ms	<±0.1%
Sweep Trigger	Delayed, Free Run, Single, Line, External, or Video#
# Video trigger is not available in RES BW settings ≤100 Hz.	

ManualsPlus.com

Delayed Sweep	
Trigger Modes	Free Run, Line, External, Video*
Range	
Span = 0	
Non-Option 007 (E-Series)	+2 µs to +65.535 ms
Option 007 E-Series and all EC-Series instruments	
Sweep time ≥ 30 ms	+2 µs to +65.535 ms
Sweep time < 30 ms	–9.9 ms to +65.535 ms[††]
Span ≥ 100 Hz	+2 µs to +65.535 ms
Resolution	1 µs
Accuracy[#]	±1 µs

* Video trigger is not available in RES BW settings ≤ 100 Hz.

[††] Negative delayed sweep (pre-trigger) is also limited to 50 × sweep time.

[#] In E-Series instruments without Option 007, the delay time will be subject to up to ±0.5 µs of jitter due to synchronization of the input edge trigger to the internal 1 MHz timebase. In E-series instruments with Option 007 and EC-series instruments using sweeptimes <30 ms, the delay time will experience up to ±83 ns of jitter due to synchronization of the input edge trigger to the internal 12 MHz timebase.

ManualsPlus.com

Time-Gated Spectrum Analysis

Gate Delay*	**Edge Mode**	**Level Mode**
Range	3 µs to 65.535 ms	≤0.5 µs
Resolution	1 µs	
Accuracy†	<±1 µs	

* Time from GATE TRIGGER INPUT to positive edge of GATE OUTPUT.

† The gate delay time will experience up to ±0.5 µs of jitter due to synchronization of the input edge trigger to the internal 1 MHz timebase.

Gate Length*	
Range	1 µs to 65.535 ms
Resolution	1 µs
Accuracy	<±1 µs

* Time from positive edge to negative edge of GATE OUTPUT.

Marker Frequency Resolution	SPAN/600 to a minimum of 1 Hz

Marker Time Resolution	Sweep time/600

ManualsPlus.com

Amplitude Specifications

Measurement Range

Maximum Safe Input Power	
Average Continuous Power (input attenuation ≥10 dB)	+30 dBm (1 W)
Peak Pulse Power (input attenuation ≥30 dB)	+50 dBm (100 W) for pulse widths ≤10 µs and <1% duty cycle.
DC Voltage	<±0.2 V

Gain Compression	
10 MHz to 2.9 GHz (≤–5 dBm at input mixer‡)	<1.0 dB
2.9 GHz to 6.46 GHz (≤0 dBm at input mixer†)	<1.0 dB
6.46 GHz to 26.8 GHz (≤–3 dBm at input mixer)†	<1.0 dB
26.8 GHz to 40 GHz (≤0 dBm at input mixer)†	<1.0 dB m (characteristic)

‡ Mixer level = input level – input attenuation.

ManualsPlus.com

Displayed Average Noise Level With no signal at input, 1 Hz video bandwidth, and 0 dB input attenuation, tracking generator off.		
Frequency Range	**10 Hz RES BW** *(Option 103)*	**1 Hz RES BW** *(Non-Option 103)*
30 Hz (*Option 006*)	<–80 dBm	<–90 dBm
1 kHz (*Option 006*)	<–95 dBm	<–105 dBm
10 kHz	<–110 dBm	<–120 dBm
100 kHz	<–110 dBm	<–120 dBm
1 MHz to 10 MHz	<–130 dBm	<–140 dBm
10 MHz to 2.9 GHz		
serial number prefix <3641A	<–130 dBm	<–140 dBm
serial number prefix ≥3641A	<–135 dBm	<–145 dBm
Option H13	<–135 dBm	<–145 dBm
2.9 GHz to 6.46 GHz	<–137 dBm	<–147 dBm
6.46 GHz to 13.2 GHz	<–133 dBm	<–143 dBm
13.2 GHz to 22.0 GHz	<–130 dBm	<–140 dBm
22.0 GHz to 26.8 GHz	<–126 dBm	<–136 dBm
26.8 GHz to 31.15 GHz	<–129 dBm	<–139 dBm
31.15 GHz to 40 GHz	<–120 dBm	<–130 dBm*
40 GHz to 50 GHz	<–117 dBm	<–127 dBm*
* Refer to Resolution Bandwidth Usability.		

ManualsPlus.com

Spurious Responses		
All input-related spurious responses, except as noted below.	**Mixer Level***	**Distortion**
10 MHz to 50 GHz	–40 dBm	<(–75 + 20 log N†) dBc
Second Harmonic Distortion		
Applied Signal Frequency Range		
1 MHz to 1.45 GHz (serial number prefix <3641A)	–40 dBm	<–72 dBc
20 MHz to 1.45 GHz (serial number prefix ≥3641A)	–40 dBm	<–79 dBc
20 MHz to 1.45 GHz (Option H13)	–40 dBm	<–79 dBc
1.45 GHz to 2.0 GHz	–10 dBm	<–85 dBc
2.0 GHz to 25 GHz	–10 dBm	<–90 dBc
Third Order Intermodulation Distortion		
(with two signals at the input mixer, spaced by ≥1 kHz)*		
Frequency Range		
1 MHz to 2.9 GHz (serial number prefix <3641A)	–30 dBm each	<–78 dBc
20 MHz to 2.9 GHz (serial number prefix ≥3641A)	–30 dBm each	<–82 dBc
20 MHz to 2.9 GHz (Option H13)	–30 dBm each	<–82 dBc
2.9 GHz to 6.46 GHz	–30 dBm each	<–90 dBc
6.46 GHz to 26.8 GHz	–30 dBm each	<–75 dBc
26.8 GHz to 50 GHz (Characteristic)	*–30 dBm each*	*<–85 dBc*
Image Responses		
Frequency Range		
10 MHz to 26.8 GHz	–10 dBm	<–80 dBc
26.8 GHz to 50 GHz	–30 dBm	<–60 dBc
Multiple and Out-of-Band Responses		
Frequency Range		
10 MHz to 26.8 GHz	–10 dBm	<–80 dBc
26.8 GHz to 50 GHz	–30 dBm	<–55 dBc

* Mixer level = input level – input attenuation.

† N = harmonic mixing number

ManualsPlus.com

Residual Responses	
>200 kHz with no signal at input, 0 dB input attenuation, N† 1	<–90 dBm
† N harmonic mixing number	

Display Range

Amplitude Scale	10 vertical display divisions, with the reference level (0 dB) at the top graticule line.

Calibration	
LOG	10 dB/DIV for 100 dB display from reference level.*
	5 dB/DIV for 50 dB display expanded from reference level.†
	2 dB/DIV for 20 dB display expanded from reference level.
	1 dB/DIV for 10 dB display expanded from reference level.†
LINEAR	10% of reference level per division over the top nine divisions
	(all 10 divisions for RES BW ≤100 Hz) when calibrated in voltage.
* 10 dB/DIV for 70 dB display from reference level for RES BW ≤100 Hz when SPAN = 0 Hz.	
† In E-Series instruments these scales are not available for sweep times < 30 ms without Option 007.	

Accuracy

Reference Level Range	
LOG, adjustable in 0.1 dB steps	
Frequency Band	**Range**
30 Hz to 31.15 GHz *(Option 006)*	–120 dBm to +30 dBm
9 kHz to 31.15 GHz *(Non-Option 006)*	–120 dBm to +30 dBm
31.15 GHz to 50 GHz	–115 dBm to +30 dBm
LINEAR, settable in 1% steps	
30 Hz to 31.15 GHz *(Option 006)*	2.2 µV to 7.07 V
9 kHz to 31.15 GHz *(Non-Option 006)*	2.2 µV to 7.07 V
31.15 GHz to 50 GHz	3.98 µV to 7.07 V

ManualsPlus.com

Reference Level Uncertainty

Frequency Response		
(with 10 dB input attenuation)		
Relative (referenced to midpoint between highest and lowest peak excursions)	–10 °C to 55 °C	20 °C to 30 °C
30 Hz to 2.9 GHz *(Option 006)*	<±1.0 dB	<±0.8 dB
9 kHz to 2.9 GHz *(Non-Option 006)*	<±1.0 dB	<±0.8 dB
100 MHz to 2.0 GHz (serial number prefix ≥3641A)	<±0.9 dB	<±0.8 dB
2.9 GHz to 6.46 GHz	<±1.7 dB	<±1.4 dB
6.46 GHz to 13.2 GHz	<±2.6 dB	<±2.2 dB
13.2 GHz to 22.0 GHz	<±2.5 dB	<±2.5 dB
22.0 GHz to 26.8 GHz	<±3.3 dB	<±2.2 dB
26.8 GHz to 31.15 GHz	<±3.1 dB	<±2.9 dB
31.15 GHz to 50 GHz	<±3.2 dB	<±3.0 dB
Absolute (referenced to 300 MHz CAL OUTPUT)		
30 Hz to 2.9 GHz *(Option 006)*	<±1.5 dB	<±1.0 dB
9 kHz to 2.9 GHz *(Non-Option 006)*	<±1.5 dB	<±1.0 dB
2.9 GHz to 6.46 GHz	<±2.6 dB	<±1.8 dB
6.46 GHz to 13.2 GHz	<±3.0 dB	<±2.8 dB
13.2 GHz to 22 GHz	<±4.0 dB	<±3.5 dB
22 GHz to 26.8 GHz	<±4.5 dB	<±4.0 dB
26.8 GHz to 31.15 GHz	<±4.0 dB	<±3.0 dB
31.15 GHz to 50 GHz	<±4.0 dB	<±4.0 dB

Band Switching Uncertainty	
(Additional uncertainty added to Relative Frequency Response for measurements between any two bands)	<±1.0 dB

Calibrator Uncertainty	
–10 dBm, 300 MHz	<±0.3 dB

ManualsPlus.com

Input Attenuator Switching Uncertainty	
(20 to 70 dB settings, referenced to 10 dB attenuation)	
Frequency Range	
9 kHz to 2.9 GHz	<±0.6 dB/10 dB step, ±1.8 dB max.
30 Hz to 2.9 GHz *(Option 006)*	<±0.6 dB/10 dB step, ±1.8 dB max.

IF Gain Uncertainty	
(0 dBm to –80 dBm reference levels with 10 dB input attenuation)	<±1.0 dB

Resolution Bandwidth Switching Uncertainty	
(Referenced to 300 kHz resolution bandwidth at the reference level.)*	<±0.5 dB
* Scale fidelity is not the same for RES BW ≤100 Hz as for RES BW ≥300 Hz. Therefore, signals not at the reference level will experience an additional amplitude difference when switching between these two sets of RES BW settings, due to differences in scale fidelity.	

ManualsPlus.com

Pulse Digitization Uncertainty	
(Pulse response mode, PRF >720/sweep time)	
LOG	
Resolution Bandwidth ≤ 1 MHz	<1.25 dB peak-to-peak
Resolution Bandwidth = 2 MHz	<3 dB peak-to-peak
LINEAR	
Resolution Bandwidth ≤ 1 MHz	<4% of reference level peak-to-peak
Resolution Bandwidth = 2 MHz	<12% of reference level peak-to-peak

IF Alignment Uncertainty	
(additional uncertainty when using 300 Hz RES BW only)	<±0.5 dB

ManualsPlus.com

Scale Fidelity*	
LOG	
Incremental	
0 to –90 dB range†	
RES BW ≥ 300 Hz	<±0.1 dB/dB
RES BW ≤ 100 Hz	<±0.2 dB/2 dB
Cumulative	
0 to –90 dB range†	
RES BW ≥ 300 Hz	<±0.1 dB/dB from the reference level to a maximum of ±0.85 dB
RES BW ≤ 100 Hz	<±0.2 dB/2 dB from the reference level to a maximum of ±0.85 dB
0 to –100 dB range†	
RES BW ≥ 300 Hz	±2.5 dB *characteristic*
RES BW ≤ 100 Hz	maximum of ±1.5 dB
LINEAR	<±3% of reference level

* Scale fidelity is not the same for RES BW ≤100 Hz as for RES BW ≥ 300 Hz. Therefore, signals not at the reference level will experience an additional amplitude difference when switching between these two sets of RES BW settings due to the differences in scale fidelity.

† 0 to –70 dB range for RES BW ≤100 Hz when SPAN = 0 Hz.

Marker Amplitude Resolution*		
	(Sweep time ≥ 30 ms)	
Scale:	LOG 10 dB/DIV	(1/6) dB
	LOG 5 dB/DIV	(1/12) dB
	LOG 2 dB/DIV	(1/30) dB
	LOG 1 dB/DIV	(1/60) dB
	LINEAR	Reference Level/600

* For E-Series instruments without Option 007 markers are not available for sweep times < 30 ms with RES BW ≥ 300 Hz. For Option 007, see the characteristics section.

ManualsPlus.com

Inputs and Outputs Specifications

CAUTION Any electrostatic discharge according to IEC 801-2/1991 to the center pins of any of the connectors may cause damage to the associated circuitry.

IF INPUT	
Connector	SMA female, front panel
Input level for full-screen deflections (external mixing mode, 0 dBm reference level, 30 dB conversion loss)	–30 dBm ± 1.5 dB

GPIB	
Connector	IEEE-488 bus connector
Interface Functions	SH1, AH1, T6, TE0, L4, LE0, SR1, RL1, PP1, DC1, DT1, C1, C28
Direct Plotter Output	Supports Agilent 7225A, Agilent 7440A, Agilent 7470A, Agilent 7475A, Agilent 7550A
Direct Printer Output	Supports HP 3630A PaintJet, HP 2225A ThinkJet

CAL OUTPUT	
Connector	BNC female, front panel
Frequency	300 MHz ±(300 MHz × frequency reference accuracy†)
Amplitude	–10 dBm ±0.3 dB

† Frequency Reference Accuracy = (aging × period of time since adjustment + initial achievable accuracy + temperature stability).

1ST LO OUTPUT	
Connector	SMA female, front panel
Amplitude	+16.5 dBm ±2.0 dB

10 MHz REF IN/OUT	
Connector	BNC female, rear panel
Output Frequency	10 MHz ±(10 MHz × frequency reference accuracy†)

† Frequency Reference Accuracy = (aging × period of time since adjustment + initial achievable accuracy + temperature stability).

ManualsPlus.com

General Specifications

Environmental Specifications	
Military Specification per MIL-T-28800, Type III, Class 3, Style B (EC)/ Style C,(E) as follows:	
Calibration Interval	2 years
Warmup	5 minutes from ambient conditions*
Temperature	
Operating	–10 °C to +55 °C (E) / 0 °C to +55 °C (EC)
Non-operating	–51 °C to +71 °C
Humidity	95% at 40 °C for 5 days
Altitude	
Operating	15,000 feet
Non-operating	50,000 feet
Rain resistance	Drip-proof at 16 liters/hour/square foot
Vibration	
5 to 15 Hz	0.060 inch peak-to-peak excursion
16 to 25 Hz	0.040 inch peak-to-peak excursion
26 to 55 Hz	0.020 inch peak-to-peak excursion
Pulse Shock	
Half Sine	30 g for 11 ms duration
Transit Drop	8 inch drop on 6 faces and 8 corners
Power Main	Voltage fluctuations within the range specified in the spectrum analyzer “Power Requirements.”
Power Main	Operating environment within the limits of installation category II according to IEC 1010.
Pollution	Operating environment within the limits of pollution degree 2 according to IEC 664.

* Two hours for conditions of internal condensation, 30 minutes to meet frequency response specifications without preselector peaking. When operating outside the 20 °C to 30 °C ambient temperature range, preselector peaking is always required to meet frequency response specifications.

ManualsPlus.com

Electromagnetic Compatibility	
	Conducted and radiated interference is in compliance with CISPR, Publication 11 (1990).
Military Specification	Meets the requirements of MIL-STD-461C, Part 2, with the exceptions shown below:
Conducted Emissions	
CE01 (Narrowband)	1 kHz to 15 kHz only
CE03 (Narrowband)	Full limits
CE03 (Broadband)	20 dB relaxation from 15 kHz to 100 kHz
Conducted Susceptibility	
CS01	Full Limits
CS02	Full Limits with 40 dB relaxation at IF frequencies. Refer also to “Radiated Immunity” in Amplitude Characteristics.
CS06	Full Limits
Radiated Emissions	
RE01	Test probe at 15 cm, front and rear panel search excluded.
RE02	Full limits to 1 GHz
Radiated Susceptibility	
RS03	Limited to 3 V/m from 14 kHz to 1 GHz with 40 dB relaxation at IF frequencies. Refer also to “Radiated Immunity” in Amplitude Characteristics.

ManualsPlus.com

Power Requirements	
115 Vac Operation	
Voltage	90 V to 140 V rms
Current	3.2 A rms maximum
Frequency	47 Hz to 440 Hz
230 Vac Operation	
Voltage	180 V to 250 V rms
Current	1.8 A rms maximum
Frequency	47 Hz to 66 Hz
Maximum Power Dissipation	180 W

Audible Noise	<5.0 Bels, 20 °C to 30 °C (ISO DP7779)

Weight	20 kg (44 lb)

ManualsPlus.com

Dimensions

With Handle and Front Cover:

(A) 202 mm (7-15/16 in) high

(C) 366 mm (14-7/16 in) wide

(F) 503 mm (19-13/16 in) deep

Without Handle and Front Cover:

(B) 187 mm (7-3/8 in) high

(D) 337 mm (13-1/4 in) wide

(E) 461 mm (18-1/8 in) deep

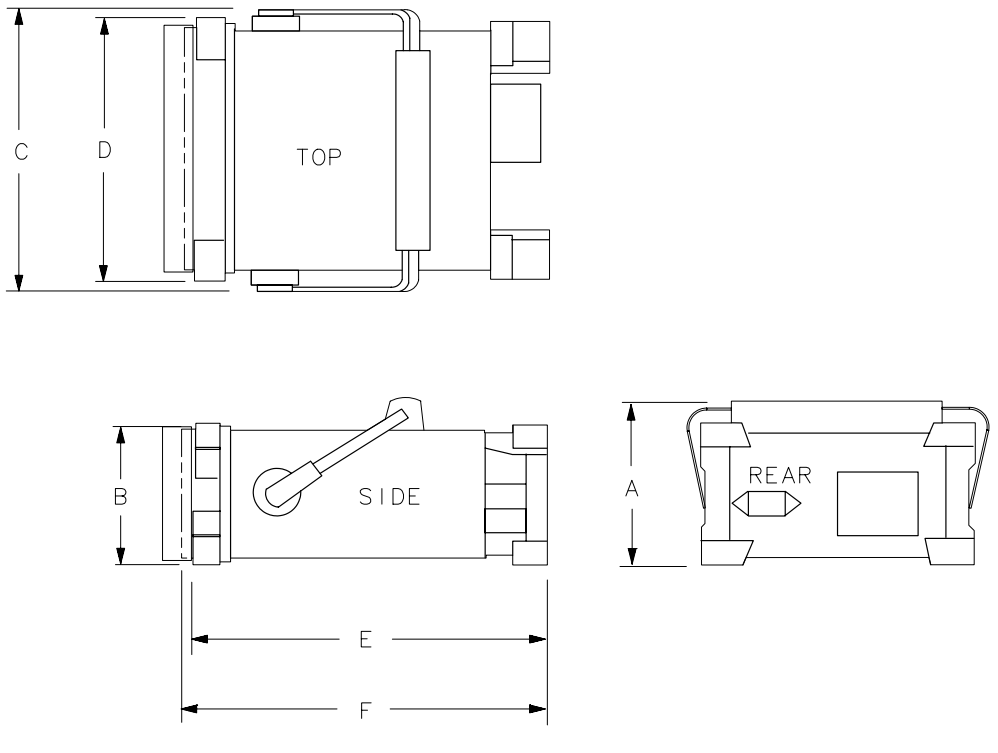

ManualsPlus.com

Frequency Characteristics

These are not specifications. Characteristics provide useful information about instrument performance.

Frequency Reference Accuracy	
Non-Option 103	
Initial Achievable Accuracy	$<\pm 2.2 \times 10^{-8}$
(includes gravitational sensitivity, retrace, and settability)	
Daily Aging (average over 7 days after being powered on for 7 days)	$<\pm 5 \times 10^{-10}$
Warmup	
(Internal frequency reference selected)	
After 5 minutes	$<\pm 1 \times 10^{-7}$ of final frequency* (0 °C to +55 °C) $<\pm 1 \times 10^{-6}$ of final frequency* (–10 °C)
After 15 minutes	$<\pm 1 \times 10^{-8}$ of final frequency* (–10 °C to +55 °C)
Option 103	
Initial Achievable Accuracy	$<\pm 1 \times 10^{-6}$

* Final frequency is defined as frequency 60 minutes after power-on with analyzer set to internal frequency reference.

Bandwidth Selectivity	
RES BW ≤100 Hz	<4.5:1
RES BW = 1 MHz	<8:1
RES BW = 2 MHz	<5.5:1

ManualsPlus.com

Impulse Bandwidth	
RES BW 2 MHz	2.93 MHz ±10%
RES BW 1 MHz	1.60 MHz ±7%
RES BW 300 kHz	491 kHz ±7%
300 Hz ≤ RES BW ≤ 100 kHz	1.62 × RES BW ± 10%

Stability	
Noise Sidebands	
For frequencies ≤ 1 GHz, 100 kHz offset from carrier, and frequency span > 2 MHz	≤121 dBc/Hz

ManualsPlus.com

Figure 7-1 Noise Sidebands Normalized to 1 Hz BW vs. Offset from Carrier

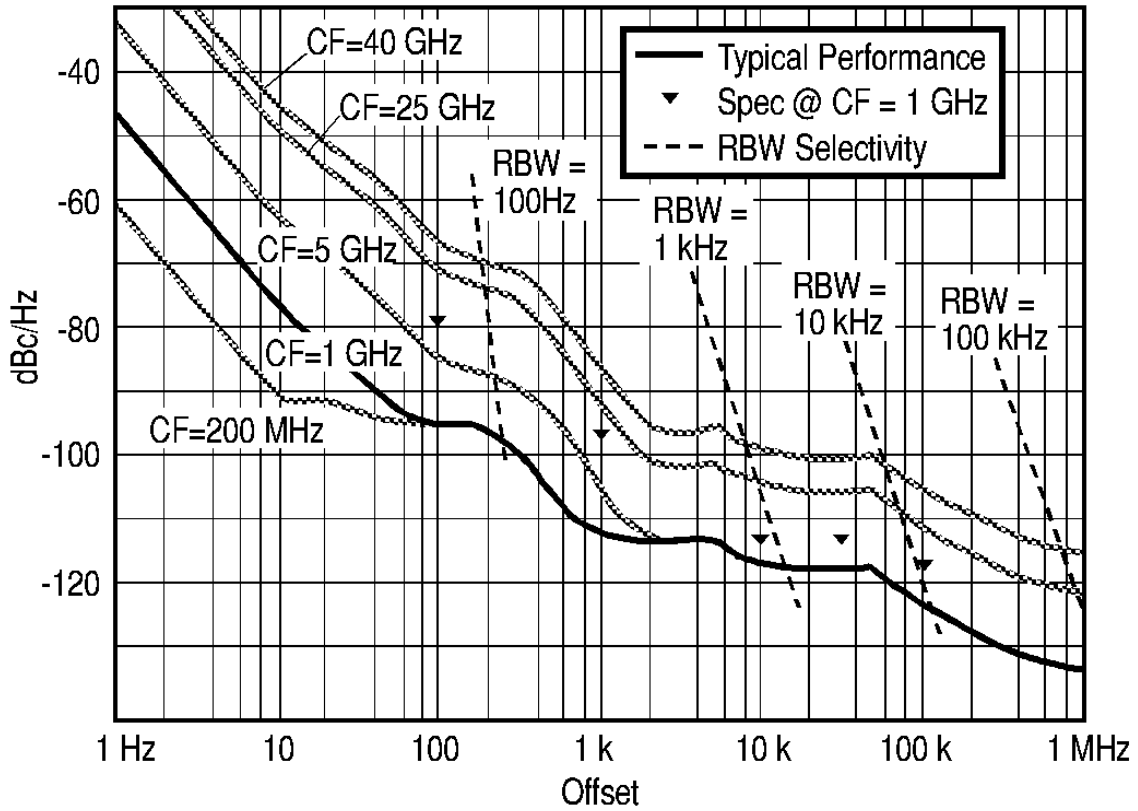

Figure 7-2 Typical On-Screen Dynamic Range vs. Offset from 1 GHz Center Freq. for all RBW's

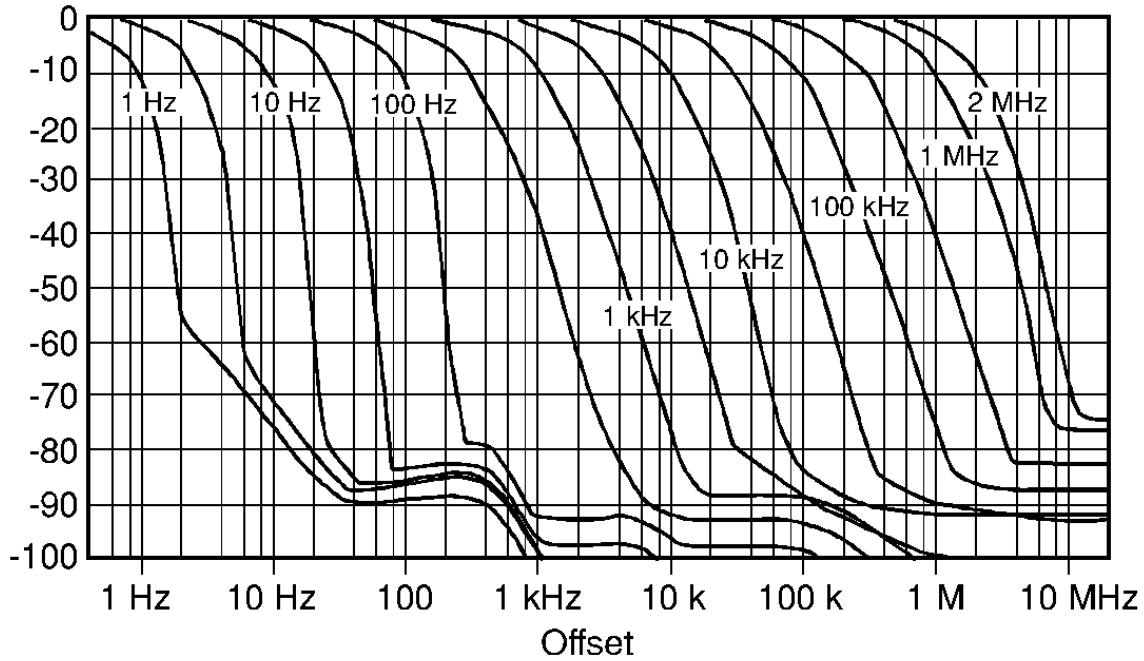

ManualsPlus.com

Sweep

Sweep Time Accuracy	
Span ≥100 Hz	<±15%

Resolution Bandwidth Usability* ***(Non-Option 103)***			
RES BW	**Maximum Usable Frequency**		
	Video Average OFF	**Video Average ON, 10 Video Averages**	
		Source/Spectrum Analyzer Frequency References	
		Locked†	**Independent‡**
≥30 Hz	>50 GHz	>50 GHz	>26.5 GHz
10 Hz	>50 GHz	>50 GHz	>15 GHz
3 Hz	>50 GHz	>50 GHz	2 GHz
1 Hz	>50 GHz	>50 GHz	200 MHz

* Resolution Bandwidth Usability is the maximum usable frequency for a given resolution bandwidth. The maximum usable frequency is limited by signal instability resulting from spectrum analyzer residual FM during the measurement interval. Measurements at frequencies less than the maximum usable frequency will have a typical amplitude uncertainty of less than 1 dB. These characteristics apply after a 30 minute warmup.

† Source and spectrum analyzer share the same frequency reference.

‡ Source and spectrum analyzer do not share the same frequency reference.

ManualsPlus.com

Amplitude Characteristics

Dynamic Range

Figure 7-3 Nominal Dynamic Range

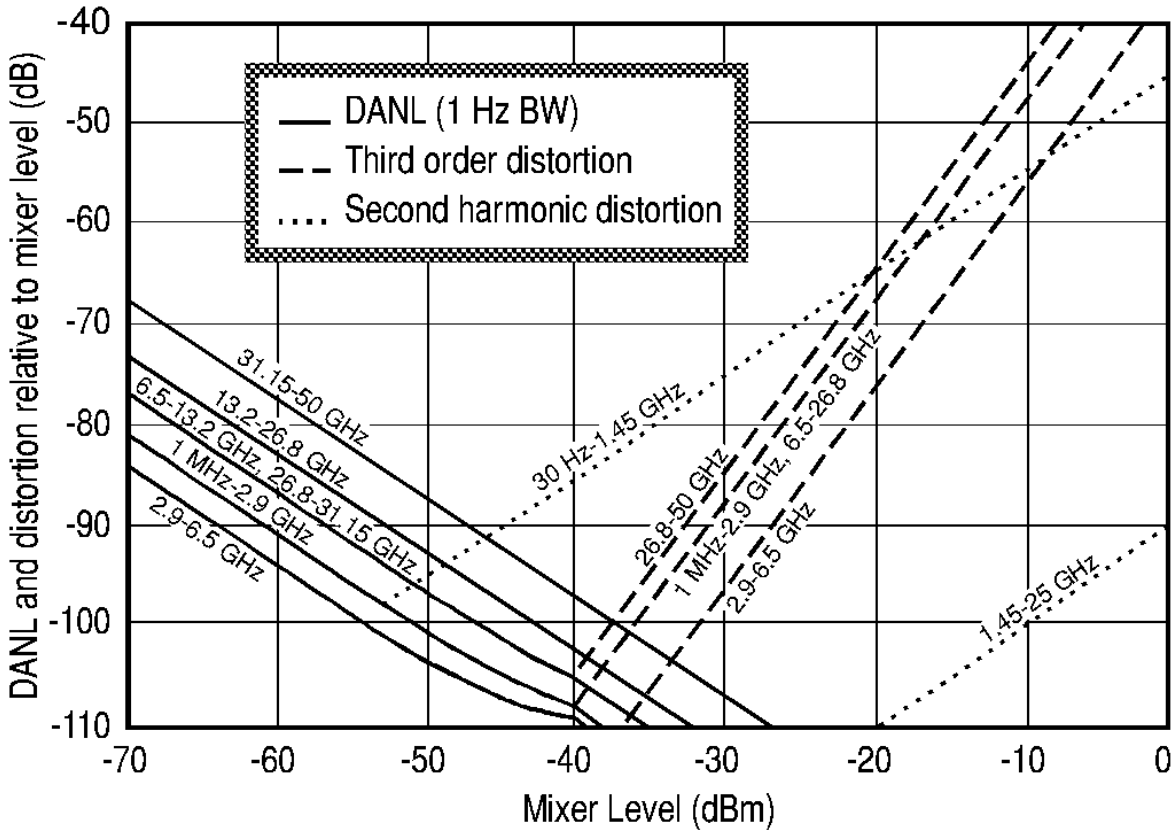

Amplitude Measurement Range

Spurious Responses	Frequency Range	Distortion
(all input related spurious responses <1 kHz from the carrier)	10 MHz to 2.9 GHz	<–55 dBc

ManualsPlus.com

Amplitude Accuracy

Band-to-Band Frequency Response (dB)

Frequency response uncertainty for measurements between any two internal mixing bands. Equivalent to the sum of the two Relative Frequency Response values plus Band Switching Uncertainty.

Band 0. 30 Hz to 2.9 GHz

Band 1. 2.9 GHz to 6.46 GHz

Band 2. 6.46 GHz to 13.2 GHz

Band 3A. 13.2 GHz to 22 GHz

Band 3B. 22 GHz to 26.8 GHz

Band 4. 26.8 GHz to 31.15 GHz

Band 5. 31.15 GHz to 50 GHz

Band-to-Band Frequency Response, 20 °C to 30 °C (dB peak-to-peak)

	Band 0	Band 1	Band 2	Band 3A	Band 3B	Band 4	Band 5
Band 0	n/a	3.2 dB	4.0 dB	4.3 dB	4.0 dB	4.7 dB	4.8 dB
Band 1	3.2 dB	n/a	4.6 dB	4.9 dB	4.6 dB	5.3 dB	5.4 dB
Band 2	4.0 dB	4.6 dB	n/a	5.7 dB	5.4 dB	6.1 dB	6.2 dB
Band 3A	4.3 dB	4.9 dB	5.7 dB	n/a	5.7 dB	6.4 dB	6.5 dB
Band 3B	4.0 dB	4.6 dB	5.4 dB	5.7 dB	n/a	6.1 dB	6.2 dB
Band 4	4.7 dB	5.3 dB	6.1 dB	6.4 dB	6.1 dB	n/a	6.9 dB
Band 5	4.8 dB	5.4 dB	6.2 dB	6.5 dB	6.2 dB	6.9 dB	n/a

Band-to-Band Frequency Response, –10 °C to 55 °C (dB peak-to-peak)

	Band 0	Band 1	Band 2	Band 3A	Band 3B	Band 4	Band 5
Band 0	n/a	3.7 dB	4.6 dB	4.5 dB	5.3 dB	5.1 dB	5.2 dB
Band 1	3.7 dB	n/a	5.3 dB	5.2 dB	6.0 dB	5.8 dB	5.9 dB
Band 2	4.6 dB	5.3 dB	n/a	6.1 dB	6.9 dB	6.7 dB	6.8 dB
Band 3A	4.5 dB	5.2 dB	6.1 dB	n/a	6.8 dB	6.6 dB	6.7 dB
Band 3B	5.3 dB	6.0 dB	6.9 dB	6.8 dB	n/a	7.4 dB	7.5 dB
Band 4	5.1 dB	5.8 dB	6.7 dB	6.6 dB	7.4 dB	n/a	7.3 dB
Band 5	4.6 dB	5.3 dB	6.2 dB	6.1 dB	6.9 dB	6.7 dB	n/a

ManualsPlus.com

Input Attenuator Repeatability	<±0.2 dB

Input Attenuator Accuracy	
2.9 GHz to 18 GHz	<±1.5 dB/10 dB step, ±3.0 dB max.
18 GHz to 26.8 GHz	<±3.0 dB/10 dB step, ±6.0 dB max.
26.8 GHz to 50 GHz	<±3.0 dB/10 dB step, ±6.0 dB max.

Pulse Digitization Uncertainty	
(Pulse response mode, PRF >720/sweep time)	
Standard Deviation	<0.2 dB

ManualsPlus.com

Marker Amplitude Resolution		
EC-Series and E-Series with Option 007, sweep time < 30 ms, zero span)		
Scale:	LOG 10 dB/DIV	≤ (1/2) dB
	LOG 5 dB/DIV	≤ (1/4) dB
	LOG 2 dB/DIV	≤ (1/10) dB
	LOG 1 dB/DIV	≤ (1/20) dB
	LINEAR	≤ Reference Level/200

Demodulation

Spectrum Demodulation	
Modulation Type	AM and FM (5 kHz peak deviation)
Audio Output	Internal speaker and phone jack with volume control.
Pause Time at Marker Frequency	100 ms to 60 s

Radiated Immunity

Radiated Immunity

When tested at 3 V/m according to IEC 801-3/1984 the displayed average noise level will be within specifications over the full immunity test frequency range of 27 to 500 MHz except that at the immunity test frequency of 310.7 MHz ± selected resolution bandwidth the displayed average noise level may be up to –80 dBm. When the analyzer tuned frequency is identical to the immunity test signal frequency there may be signals of up to –90 dBm displayed on the screen.

ManualsPlus.com

Inputs and Outputs Characteristics

CAUTION Any electrostatic discharge according to IEC 801-2/1991 to the center pins of any of the connectors may cause damage to the associated circuitry.

INPUT 50Ω	
Connector	Precision 2.4mm Male, front panel
Impedance	50 Ω
VSWR (at tuned frequency)	
	<1.5:1 for <2.9 GHz and ≥10 dB Input Attenuation
	<2.3:1 for <2.9 GHz and ≥10 dB Input Attenuation
LO Emission Level* (average)	
10 dB Input Attenuation	<–80 dBm
* Level of 1st LO, 3.0 to 6.8 GHz, present at INPUT 50Ω connector.	

IF INPUT *(Deleted on Option 002 and Option 327)*	
(2nd IF input for use with external mixers)	
Connector	SMA female, front panel
Impedance (dc coupled)	50 Ω
Frequency	310.7 MHz
Noise Figure	7 dB
1 dB Gain Compression Level	–23 dBm
Full Screen Level	–30 dBm
(Gain Compression and Full Screen Levels apply with 30 dB conversion loss setting and 0 dBm reference level.)	

1ST LO OUTPUT	
Connector	SMA female, front panel
Impedance	50 Ω
Frequency Range	3.0000 GHz to 6.8107 GHz†
† 3.8107 GHz to 6.8107 GHz for analyzers equipped with Option 002.	

ManualsPlus.com

CAL OUTPUT	
Connector	BNC female, front panel
Impedance	50 Ω

10 MHz REF IN/OUT	
Connector	BNC female, rear panel
Impedance	50 Ω
Output Amplitude	0 dBm
Input Frequency	10 MHz × (1±2×10^{-5})
Input Amplitude	–2 to +10 dBm
External Reference Phase Noise	
Analyzer noise sideband performance will not be degraded if the external reference phase noise is within the limits given below.	
Non-Option 103	<–135 dBc/Hz at 100 Hz offset
Option 103	<–110 dBc/Hz at 100 Hz offset

VIDEO OUTPUT*	
Connector	BNC female, rear panel
Impedance (dc coupled)	50 Ω
Amplitude (RES BW ≥300 Hz)	0 to +1 V full scale
Scaling	
RES BW ≥300 Hz	linear or log 100 dB/V
RES BW ≤100 Hz	4.8 kHz, auto-ranged level with dc offset

* The VIDEO OUTPUT is a video signal for RES BW ≥300 Hz with switching transients and IF ADJ signals between sweeps. For RES BW ≤100 Hz the output is an IF signal with transients and IF ADJ signals between and during sweeps.

ManualsPlus.com

LO SWP|FAV OUTPUT and LO SWP|0.5 V/GHz OUTPUT*	
Connector	BNC female, rear panel
Impedance (dc coupled)	120 Ω
LO SWP OUTPUT (no load)	0 to + 10 V
0.5 V/GHz OUTPUT	
Internal Mixer Mode	0.5 V/GHz of tuned frequency (no load)
External Mixer Mode	([(1.5 V/GHz) × LO frequency)] – 0.2054 V) ±50 mV
0.25 V/GHz OUTPUT†	0.25 V/GHz of tuned frequency (no load)

* This connector is labeled `LO SWP|0.5 V/GHz OUTPUT` on older spectrum analyzers and `LO SWP|FAV OUTPUT` on newer spectrum analyzers.

† The 0.25 V/GHz output is available only in the 8564E/EC and 8565E/EC.

BLKG/GATE OUTPUT	
Connector	BNC female, rear panel
Impedance	50 Ω
Blanking Mode	
Amplitude during sweep	Low TTL Level
Amplitude during retrace	High TTL Level
Gate Mode	
Gate On	High TTL level
Gate Off	Low TTL level

EXT/GATE TRIG INPUT	
Connector	BNC female, rear panel
Impedance	10 kΩ
Trigger Level	Settable to high TTL, or low TTL, or edge triggered TTL

PROBE POWER (front panel)	
Voltage	+15 V dc, –12.6 V dc
Current	150 mA maximum, each

ManualsPlus.com

EARPHONE	
Connector	1/8 inch miniature monophonic jack, rear panel
Power Output	0.2 W into 4 Ω

2ND IF OUT			
(*Option 001 instruments only*)			
Connector	SMA female, rear panel		
Impedance	50 Ω		
Frequency	310.7 MHz		
Frequency Range	**3 dB BW**	**Noise Figure**	**Conversion Gain**
10 kHz to 2.9 GHz			
serial number prefix <3641A	>28 MHz	25 dB	–6 dB
serial number prefix ≥3641A	>28 MHz	20 dB	1 dB
2.9 GHz to 6.5 GHz	>30 MHz	22 dB	–3 dB
6.5 GHz to 13.2 GHz	>30 MHz	26 dB	–7 dB
13.2 GHz to 22 GHz	>30 MHz	30 dB	–11 dB
22 GHz to 26.8 GHz	>30 MHz	32 dB	–13 dB
26.8 GHz to 31.15 GHz	>28 MHz	24 dB	–14 dB
31.15 GHz to 50 GHz	>28 MHz	34 dB	–14 dB

ALT SWEEP OUT	
(Option 005 analyzers only)	
Connector	BNC female, rear panel
Impedance	100 Ω

ManualsPlus.com

Regulatory Information

The following information applies to the 8565EC spectrum analyzer.

DECLARATION OF CONFORMITY

According to ISO/IEC Guide 22 and CEN/CENELEC EN 45014

Manufacturer's Name: Agilent Technologies, Inc.

Manufacturer's Address: 1400 Fountaingrove Parkway
Santa Rosa, CA 95403-1799
USA

Declares that the products

Product Name: Spectrum Analyzer

Model Number: 8560EC, 8561EC, 8562EC, 8563EC, 8564EC, 8565EC

Product Options: This declaration covers all options of the above products.

Conform to the following product specifications:

EMC: IEC 61326-1:1997+A1:1998 / EN 61326-1:1997+A1:1998

Standard	Limit
CISPR 11:1990 / EN 55011-1991	Group 1, Class A
IEC 61000-4-2:1995+A1998 / EN 61000-4-2:1995	4 kV CD, 8 kV AD
IEC 61000-4-3:1995 / EN 61000-4-3:1995	3 V/m, 80 - 1000 MHz
IEC 61000-4-4:1995 / EN 61000-4-4:1995	0.5 kV sig., 1 kV power
IEC 61000-4-5:1995 / EN 61000-4-5:1996	0.5 kV L-L, 1 kV L-G
IEC 61000-4-6:1996 / EN 61000-4-6:1998	3 V, 0.15 – 80 MHz
IEC 61000-4-11:1994 / EN 61000-4-11:1998	1 cycle, 100%

Safety: IEC 61010-1:1990 + A1:1992 + A2:1995 / EN 61010-1:1993 +A2:1995
CAN/CSA-C22.2 No. 1010.1-92

Supplementary Information:
The products herewith comply with the requirements of the Low Voltage Directive 73/23/EEC and the EMC Directive 89/336/EEC and carry the CE-marking accordingly.

Santa Rosa, CA, USA 18 Jan. 2000

Greg Pfeiffer/Quality Engineering Manager

For further information, please contact your local Agilent Technologies sales office, agent or distributor.

ManualsPlus.com

The following information applies to the 8565E spectrum analyzer.

DECLARATION OF CONFORMITY

According to ISO/IEC Guide 22 and CEN/CENELEC EN 45014

Manufacturer's Name: Agilent Technologies, Inc.

Manufacturer's Address: 1400 Fountaingrove Parkway
Santa Rosa, CA 95403-1799
USA

Declares that the products

Product Name: Spectrum Analyzer

Model Number: 8560E, 8560EL, 8561E, 8562E, 8562EL, 8563E, 8564E, 8565E

Product Options: This declaration covers all options of the above products.

Conform to the following product specifications:

	Standard	Limit
EMC:	CISPR 11:1990 / EN 55011-1991	Group 1, Class A
	IEC 801-2:1984/EN 50082-1:1992	4 kV CD, 8 kV AD
	IEC 801-3:1984/EN 50082-1:1992	3 V/m, 80 - 1000 MHz
	IEC 801-4:1988/EN 50082-1:1992	0.5 kV sig., 1 kV power

Safety: IEC 61010-1:1990 + A1:1992 + A2:1995 / EN 61010-1:1993 +A2:1995
CAN/CSA-C22.2 No. 1010.1-92

Supplementary Information:
The products herewith comply with the requirements of the Low Voltage Directive 73/23/EEC and the EMC Directive 89/336/EEC and carry the CE-marking accordingly.

Santa Rosa, CA, USA 1 Nov. 2000

Greg Pfeiffer/Quality Engineering Manager

For further information, please contact your local Agilent Technologies sales office, agent or distributor.

ManualsPlus.com

Notice for Germany: Noise Declaration

LpA < 70 dB am Arbeitsplatz (operator position) normaler Betrieb (normal position) nach DIN 45635 T. 19 (per ISO 7779)

CE: European Community

The product design was approved for the European Community.

ISM1-A: Industrial Scientific and Medical Group 1, Class A

The instrument meets the requirements of CISPER 11, Clause 4.

CSA: Canadian Standards Association

The CSA mark is a registered trademark of the Canadian Standards Association. The product meets the requirements.

IEC: International Electrotechnical Commission

This instrument has been designed and tested in accordance with IEC Publication 1010, Safety Requirements for Electronic Measuring Apparatus, and has been supplied in a safe condition. The instruction documentation contains information and warnings which must be followed by the user to ensure safe operation and to maintain the instrument in a safe condition.

This product conforms to Enclosure Protection IP 2 0 according to IEC-529. The enclosure protects against finger access to hazardous parts within the enclosure; the enclosure does not protect against the entrance of water.

ManualsPlus.com

8 Using Performance Tests: 3335A Source not Available

ManualsPlus.com

What You'll Find in This Chapter

These procedures test the electrical performance of the spectrum analyzer against the specifications. None of the test procedures requires removing the cover of the instrument.

The Agilent 3335A Synthesizer Level Generator has been discontinued and will neither be available from Agilent Technologies nor will technical support be available after October of the year 2000. Because of the unavailability of the Agilent 3335A, new performance test procedures were required that use different signal sources. In the event that the Agilent 3335A is not available, substitute these procedures for those of the same number found in Chapter 1 of Volume II, of the *Agilent 8560 E-Series and EC-Series Spectrum Analyzers Calibration Guide*. If you have an Agilent 3335A Synthesizer Level Generator you will find instructions for all performance tests in Chapter 1, of Volume II, of the calibration guide.

ManualsPlus.com

Before You Start

There are three things you must do *before* starting performance verification or operation verification:

1. Switch the analyzer on and let it warm up in accordance with warm-up requirements in the specifications chapter.
2. After the analyzer has warmed up as specified, perform “Trace Alignment Procedure and Reference Level Calibration” in the user's guide.
3. Read the rest of this section before you start any of the tests.

Test Equipment You'll Need

Table 8-2 lists the recommended test equipment for the performance tests. Any equipment that meets the critical specifications given in the table can be substituted for the recommended model (s). The table also lists the recommended equipment for the analyzer adjustment procedures. The adjustment procedures are located in the service guide.

Recording Test Results

Record test results in the performance test record located in Chapter 2 of volume II, of the *Agilent Technologies 8560 E-Series and EC-Series Spectrum Analyzers Calibration Guide*. The test record lists test specifications and acceptable limits. We recommend that you make a copy of this table, record the complete test results on the copy, and keep the copy for your calibration test record. This record could prove invaluable in tracking gradual changes in test results over long periods of time.

If the Analyzer Doesn't Meet Specifications

If the analyzer doesn't meet one or more of the specifications during testing, complete any remaining tests and record all test results on a copy of the test record. Refer to the user's guide chapter “If You Have A Problem”. If an error message is displayed, press **PRESET CAL**, and select **REALIGN LO & IF**. If the error message persists after the automatic RF, LO, and IF adjustments are completed, refer to the troubleshooting information in the user's guide.

Calibration Cycle

The performance tests should be used to check the spectrum analyzer against its specifications every two years for the Agilent 8560E/EC, Agilent 8561E/EC, Agilent 8562E/EC, and Agilent 8563E/EC, and every one year for the Agilent 8564E/EC and Agilent 8565E/EC.

ManualsPlus.com

The frequency reference must be adjusted and checked at the same time. Refer to the “10 MHz Frequency Reference Adjustment” in the service guide.

Table 8-1 Required Performance Tests: Agilent 3335A Source Not Available

Test	8560E/EC	8561E/EC	8562E/EC	8563E/EC	8564E/EC	8565E/EC
11. Resolution Bandwidth Switching and IF Alignment Uncertainty	√	√	√	√	√	√
12. Resolution Bandwidth Accuracy and Selectivity	√	√	√	√	√	√
13. Input Attenuator Switching Uncertainty	√	√	√	√		
14. Input Attenuator Switching Uncertainty					√	√
15. IF Gain Uncertainty	√	√	√	√	√	√
16. Scale Fidelity	√	√	√	√	√	√
33. Second Harmonic Distortion	√					
34. Second Harmonic Distortion		√				
36. Frequency Response	√					
37. Frequency Response		√				
38. Frequency Response			√			
39. Frequency Response				√		
40. Frequency Response					√	
41. Frequency Response						√
43. Third Order Intermodulation Distortion	√					
44. Third Order Intermodulation Distortion		√				
45. Third Order Intermodulation Distortion			√	√		
46. Third Order Intermodulation Distortion					√	√

ManualsPlus.com

Required Test Equipment

The following table lists the test equipment required to execute the performance test in this chapter. These test originally required the use of the Agilent 3335A Synthesizer Level Generator. For test equipment used in performance tests other than those listed in this chapter, refer to Table 10-1 in Volume II of the calibration guide.

Table 8-2 Recommended Test Equipment

Instrument	Critical Specifications for Equipment Substitution	Recommended Model	Use
Sources			
4. Synthesized Signal Generator	Frequency range: 250 kHz to 3 GHz Frequency resolution: 1 Hz Attenuator resolution: 0.02 dB Level accuracy: ±0.5 dB External 10 MHz Ref. Input	Agilent E4421 or Agilent E4422, Agilent E4432, Agilent E4433	P,A
Synthesized sweeper	Frequency range: 8560E, 10 MHz to 12.0 GHz Agilent 8561E, 10 MHz to 12.0 GHz Agilent 8562E, 10 MHz to 13.2 GHz Agilent 8563E, 10 MHz to 26.5 GHz Frequency accuracy (CW): 1×10^{-9}/day Leveling modes: Internal &External Modulation modes: AM &Pulse Power level range: –80 to +16 dBm	Agilent 83640B* Agilent 83630A Opt 001, 008	P,A,T, M,V
Synthesized sweeper *(for Agilent 8564E and Agilent 8565E)*	Frequency range: Agilent 8564E, 10 MHz to 40.0 GHz Agilent 8565E, 10 MHz to 50.0 GHz Frequency accuracy (CW): 1×10^{-9}/day Leveling mode: Internal Power level range: –35 to +16 dBm	Agilent 83650A Opt 001, 008	P,A,T, V
Function Generator	Frequency Range: 100 kHz to 250 kHz Frequency Accuracy: ±0.02%	Agilent 3324A or Agilent 33120A	P

ManualsPlus.com

Table 8-2 Recommended Test Equipment (Continued)

Instrument	Critical Specifications for Equipment Substitution	Recommended Model	Use
Receivers			
Measuring receiver	Compatible w/power sensors dB relative mode Resolution: 0.01 dB Reference accuracy: <±1.2%	Agilent 8902A*	P,A,T, M,V
Sensors			
Power sensor *(for 8560E, Agilent 8561E or Agilent 8562E)*	Frequency range: 10 MHz to 13.2 GHz Maximum SWR: 1.40 (10 to 30 MHz) 1.18 (30 to 50 MHz) 1.10 (50 MHz to 2 GHz) 1.18 (2 to 13.2 GHz)	Agilent 8481A*	P,A,T, M,V
Power sensor	Frequency range: 100 kHz to 2.9 GHz Maximum SWR: 1.1 (1 MHz to 2.0 GHz) 1.30 (2.0 GHz to 2.9 GHz)	Agilent 8482A*	P,A,T, M,V
Power sensor *(for Agilent 8563E)*	Frequency range: 50 MHz to 26.5 GHz Maximum SWR: 1.15 (50 to 100 MHz) 1.10 (100 MHz to 2 GHz) 1.15 (2.0 to 12.4 GHz) 1.20 (12.4 to 18 GHz) 1.25 (18 to 26.5 GHz)	Agilent 8485A*	P,A,T, M,V

ManualsPlus.com

Table 8-2 Recommended Test Equipment (Continued)

Instrument	Critical Specifications for Equipment Substitution	Recommended Model	Use
Power sensor *(for Agilent 8564E and Agilent 8565E)*	Frequency range: 50 MHz to 50 GHz Maximum SWR: 1.15 (50 to 100 MHz) 1.10 (100 MHz to 2 GHz) 1.15 (2.0 to 12.4 GHz) 1.20 (12.4 to 18 GHz) 1.25 (18 to 26.5 GHz) 1.30 (26.5 to 40 GHz) 1.50 (40 to 50 GHz)	Agilent 8487A	P,V
Other Equipment			
Digital voltmeter	Range: –15 Vdc to +120 Vdc Accuracy: <±1 mV on 10 V range Input impedance: ≥1 M Ω	Agilent 3458A*	A,T
Probes			
DVM test leads	≥36 inches, alligator clips, probe tips	Agilent 34118A	A,T
Accessories			
Directional bridge	Frequency range: 1 to 80 MHz Coupling: 6 dB (nominal) Maximum coupling deviation: <1 dB (nominal) Directivity: 40 dB minimum Impedance: 50 Ω (nominal)	Agilent 8721A	P
Directional coupler *(forAgilent 8561E)* *(two required)*	Frequency range: 2.0 to 6.5 GHz Coupling: 16.0 dB (nominal) Maximum coupling deviation: ±1 dB (nominal) Directivity: 14 dB minimum Flatness: 0.75 dB maximum VSWR: <1.45 Insertion loss: <1.3 dB	0955-0098	P

ManualsPlus.com

Table 8-2 Recommended Test Equipment (Continued)

Instrument	Critical Specifications for Equipment Substitution	Recommended Model	Use
Directional coupler (*for Agilent 8562E, Agilent 8563E, Agilent 8564E, and Agilent 8565E*) *(two required)*	Frequency range: 2.0 to 8.1 GHz Coupling: 16.0 dB (nominal) Maximum coupling deviation: ±1 dB (nominal) Directivity: 14 dB minimum Flatness: 0.75 dB maximum VSWR: <1.45 Insertion loss: <1.3 dB	0955-0098	P
10 dB step attenuator	Attenuation range: 30 dB Frequency range: dc to 80 MHz Connectors: Type N (f)	Agilent 8496G Option 001	P,V
1 dB step attenuator	Attenuation range: 12 dB Frequency range: dc to 80 MHz Connectors: Type N (f)	Agilent 8494G Option 001	P,V
Attenuator Driver	Compatible with the Agilent 8496G and Agilent 8494G step attenuators.	Agilent 11713A	P,V
Attenuator Interconnector Kit	Type-N For Agilent 8496G and Agilent 8494G attenuators.	Agilent 11716A or Agilent 11716C	P,V
20 dB fixed attenuator	Frequency range: dc to 18 GHz Attenuation accuracy: <±1 dB Maximum SWR: 1.2 (dc to 2.9 GHz)	Agilent 8491B Option 020	P,V
10 dB fixed attenuator	Frequency range: dc to 18 GHz Attenuation accuracy: <±0.6 dB Maximum SWR: 1.2 (dc to 2.9 GHz)	Agilent 8491B Option 010	P,V
Termination *(for 8560E)*	Frequency range: dc to 2.9 GHz Impedance: 50 Ω Maximum SWR: <1.10 Connector: Type N (m)	Agilent 908A	P,M,V
Low-pass filter	Cutoff frequency: 50 MHz Rejection at 65 MHz: >40 dB Rejection at 75 MHz: >60 dB	0955-0306	P,M,V

ManualsPlus.com

Table 8-2 Recommended Test Equipment (Continued)

Instrument	Critical Specifications for Equipment Substitution	Recommended Model	Use
Low-pass filter *(two required for Agilent 8561E,* *Agilent 8562E, Agilent 8563E,* *Agilent 8564E, and Agilent 8565E)*	Cutoff frequency: 4.4 GHz Rejection at 5.5 GHz: >40 dB	Agilent 11689A RLC F-2634 9135-0005	P
Power splitter *(for 8560E or Agilent 8561E)*	Frequency range: 1 kHz to 12 GHz Insertion loss: 6 dB (nominal) Output tracking: <0.25 dB Equivalent output SWR: <1.22	Agilent 11667A	P,A,M, V
Power splitter *(forAgilent 8562E and Agilent 8563E)*	Frequency range: dc to 26.5 GHz Output tracking: <0.25 dB Insertion loss: 6 dB (nominal) Equivalent output SWR: <1.22	Agilent 11667B	
Power splitter *(for Agilent 8564E and Agilent 8565E)*	Frequency range: dc to 50 GHz Output tracking: <0.25 dB Insertion loss: 6 dB (nominal) Equivalent output SWR: <1.22	Agilent 11667C	
Cables			
Cable	Connectors: SMA (m) Length: 24 to 36 inches	8120-1578	P
Cable, 50 Ω coaxial *(four required)*	Connectors: BNC (m) Length: ≥ 122 cm (48 in.)	Agilent 10503A	P,A,V
Cable *(two required)*	Frequency range: 30 Hz to 26.5 GHz Maximum SWR: <1.4 at 26.5 GHz Maximum insertion loss: 3 dB Connectors: APC 3.5 (m), both ends Length: ≥ 61 cm (24 in.)	8120-4921	P,A,M, V
Adapters			
Adapter *(four required)*	Type N (m)-to-BNC (f)	1250-1476	P,A,V
Adapter	Type N (m)-to-N (m)	1250-1475	P

ManualsPlus.com

Table 8-2 Recommended Test Equipment (Continued)

Instrument	Critical Specifications for Equipment Substitution	Recommended Model	Use
Adapter *(two required)*	Type N (m)-to-APC 3.5 (m)	1250-1743	P,M,V
Adapter	Type N (m)-to-APC 3.5 (f)	1250-1744	P,V
Adapter	Type N (m)-to-BNC (m)	1250-1473	P
Adapter	Type N (m)-to-N (f)	1250-1472	P
Adapter *(two required)*	Type N (f)-to-APC 3.5 (f)	1250-1745	P,V
Adapter *(two required)*	Type N (m)-to-SMA (f)	1250-1250	P,V
Adapter *(two required)*	Type N (m)-to-SMA (m)	1250-1636	P,V
Adapter	Type N (f)-to-SMA (f)	1250-1772	P
Adapter	BNC tee (f) (m) (f)	1250-0781	P,A,M, V
Adapter	SMA (m)-to-SMA (m)	1250-1159	P,A,V
Adapter	BNC (f)-to-dual banana plug	1251-2816	A,T
Adapter	BNC (f)-to-dual banana plug	1251-1477	A,T
Adapter *(two required)*	APC 3.5 (f)-to-APC 3.5 (f)	5061-5311	P,M,V
Adapter *(two required)*	APC 3.5 (f)-to-APC 3.5 (f)	1250-1749	P,V
Adapter	APC 3.5 (f)-to-2.4 mm (f)	Agilent 11901B	P
Adapter	Type N (f)-to-2.4 mm (f)	Agilent 11903B	P,A,T, V

* Part of microwave workstation

P = performance tests; A = adjustments; M = test & adjustment module; T = troubleshooting; V = operation verification

ManualsPlus.com

Using Agilent 11713A, Agilent 8494G, and Agilent 8496G

When using the programmable version of the 1 dB and 10 dB step attenuator—Agilent 8494G and Agilent 8496G, respectively—the Agilent 11713A attenuator/Switch Driver must be used to control the attenuators. The Agilent 8594G 1 dB step attenuator should be connected as Attenuator X and the Agilent 8496G 10 dB step attenuator should be connected as Attenuator Y.

Use Table 8-3 to determine the settings for Attenuator X and Attenuator Y to achieve the desired attenuation value. In the Attenuator X and Attenuator Y columns, a “1” indicates that the selection is on—the LED in the button will be lit. An “0” in these columns indicates that the selection is off and the LED will be off. For example, if the 1 dB step attenuator is to be set 2 dB and the 10 dB step attenuator is to be set to 60 dB for a total of 62 db, then sections 2,6, and 7 should be on (lit) and all other sections should be off.

Table 8-3 Agilent 11713A Settings for Agilent 8494G and Agilent 8496G

1 dB Step Attenuator (dB)	Attenuator X				10 dB Step Attenuator (dB)	Attenuator Y			
	1	2	3	4		5	6	7	8
0	0	0	0	0	0	0	0	0	0
1	1	0	0	0	10	1	0	0	0
2	0	1	0	0	20	0	1	0	0
3	1	1	0	0	30	1	1	0	0
4	0	0	1	0	40	0	0	1	0
5	1	0	1	0	50	1	0	1	0
6	0	1	1	0	60	0	1	1	0
7	1	1	1	0	70	1	1	1	0
8	0	0	1	1	80	0	0	1	1
9	1	0	1	1	90	1	0	1	1
10	0	1	1	1	100	0	1	1	1
11	1	1	1	1	110	1	1	1	1

ManualsPlus.com

11a. Resolution Bandwidth Switching and IF Alignment Uncertainty

Instrument Under Test

All 8560 E-Series and EC-Series except Option EMI

Related Specifications

Resolution Bandwidth Switching Uncertainty
IF Alignment Uncertainty

Related Adjustment

There is no related adjustment procedure for this performance test.

Description

A signal source is applied to the input of the spectrum analyzer, and an amplitude reference is set with the RES BW at 300 kHz. At each of the analyzer resolution bandwidth settings, the amplitude of the source is adjusted to place the signal at the analyzer reference level. The source amplitude is compared with the amplitude at the analyzer 300 kHz RES BW setting. The difference between the settings equals the RES BW switching uncertainty. For the 300 Hz resolution bandwidth setting, the difference between settings equals the sum of the resolution bandwidth switching uncertainty and IF alignment uncertainty.

Figure 8-1 Resolution BW Switching and IF Alignment Uncertainty Test Setup

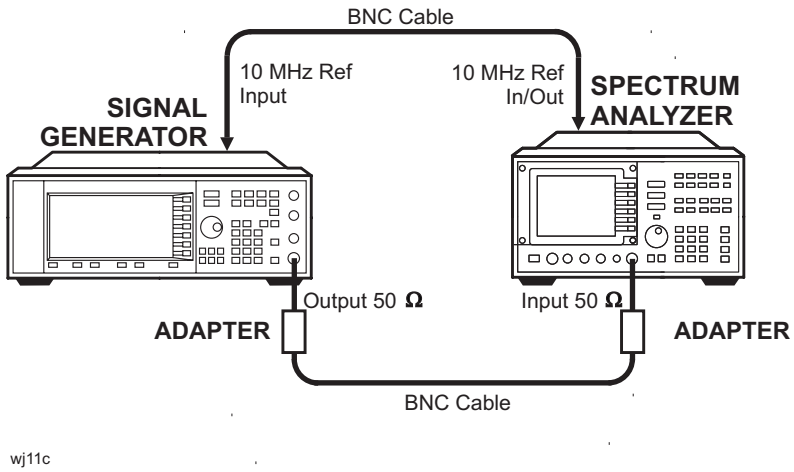

ManualsPlus.com

Equipment

Signal Generator E4421B

Adapters

Type N (m) to BNC (f) (*2 required*). 1250-1476

Type N (f) to 2.4 mm (f). 11903B

(*for Agilent 8564E and 8565E*)

Cable

BNC, 122 cm (48 in.) *(2 required)*. 10503A

Procedure

1. Connect the equipment as shown in Figure 8-1. The spectrum analyzer provides the frequency reference for the Agilent E4421B.
2. Set the E4421B controls as follows:

   Frequency . . . . . .50 MHz

   Amplitude . . . . . .–5 dBm

   Amplitude increment . . . . . 0.02 dB
3. Press **PRESET**, **CAL,** and **FULL IF ADJ** on the spectrum analyzer. Wait for the `IF ADJUST STATUS:` message to disappear, then set the controls as follows:

   Center frequency . . . . . .50 MHz

   Span . . . . . .1 MHz

   Log dB/division . . . . . .1 dB

   Resolution BW . . . . . 300 kHz
4. On the spectrum analyzer, press **CAL** and **IF ADJ OFF**. Press **PEAK SEARCH, MKR** →, and **MARKER** → **REF LVL**. Wait for the completion of a new sweep.
5. Press **PEAK SEARCH** and **MARKER DELTA**.
6. Set the spectrum analyzer controls as follows:

   Span . . . . . .10 MHz

   Resolution BW . . . . . .2 MHz

   Video BW/Resolution BW ratio 0.100

ManualsPlus.com

7. On the spectrum analyzer, press **CAL** and **ADJ CURR IF STATE**. Wait for the `IF ADJUST STATUS` message to disappear.
8. On the spectrum analyzer, press **PEAK SEARCH**.
9. On the Agilent E4421B, press **Amplitude** and use the increment ⇓ and ⇑ keys to adjust the amplitude until the marker amplitude displayed on the spectrum analyzer reads 0 dB ±0.05 dB.
10. If the peak is still off the screen, repeat step 8 and step 9.
11. Record the E4421B amplitude setting in Table 8-4.
12. Calculate the amplitude difference by subtracting the E4421B Amplitude setting from –5 dBm. Record the result as the amplitude difference in Table 8-4.

    Amplitude difference = E4421B Amplitude setting – (–5 dBm)
13. On the spectrum analyzer, set the span and resolution bandwidth to the next settings listed in Table 8-4.
14. Repeat step 7 through step 13 for the remaining spectrum analyzer SPAN and RES BW settings in Table 8-4. The 3 Hz and 1 Hz RES BW settings are not available in analyzers with Option 103.

ManualsPlus.com

Table 8-4 Resolution Bandwidth Switching and IF Alignment Uncertainty

Spectrum Analyzer Settings		Signal Generator Amplitude (dBm) E4421B	Amplitude Difference (dB)	Measurement Uncertainty (dB)
Span	Res BW			
1 MHz	300 kHz	–5 (Ref.)	0 (Ref.)	±0.10
10 MHz	2 MHz			±0.10
5 MHz	1 MHz			±0.10
500 kHz	100 kHz			±0.10
100 kHz	30 kHz			±0.10
50 kHz	10 kHz			±0.10
10 kHz	3 kHz			±0.10
5 kHz	1 kHz			±0.10
1 kHz	300 Hz			±0.10
500 Hz	100 Hz			±0.10
100 Hz	30 Hz			±0.10
100 Hz	10 Hz			±0.10
100 Hz	3 Hz*			±0.10
100 Hz	1 Hz*			±0.10

*These bandwidths are not available in spectrum analyzers with Option 103.

ManualsPlus.com

12a. Resolution Bandwidth Accuracy and Selectivity

Instrument Under Test

All 8560 E-Series and EC-Series, except Option EMI

Related Specifications

Resolution Bandwidth Accuracy
Resolution Bandwidth Selectivity

Related Adjustment

There is no related adjustment procedure for this performance test.

Description

The output of a signal source is connected to the input of the spectrum analyzer through a precision step attenuator set. The spectrum analyzer is set to a span approximately twice the resolution bandwidth setting (for measuring the –3 dB bandwidth). The actual span error is determined by moving the source frequency and comparing the measured frequency difference to the actual difference between the two source frequencies.

The signal to the analyzer is then reduced in amplitude by 3 dB to determine the actual –3 dB point. A marker reference is set and the signal amplitude is increased by 3 dB to its previous level. A sweep is then taken and the markers are used to measure the 3 dB bandwidth. The measured bandwidth is then corrected for the span error and a percent error between the ideal bandwidth and the corrected bandwidth is calculated and recorded.

The span error is not measured in the narrower spans. To measure the span error accurately, the span-to-resolution bandwidth ratio should be approximately 100:1 with a resolution bandwidth ≥300 Hz. This criteria cannot be met in the narrower spans.

The –60 dB bandwidths are measured in a similar manner, with the span set to about 15 to 20 times the resolution bandwidth setting. The ratio between the –60 dB and –3 dB bandwidths is calculated and recorded.

RES BW settings ≤100 Hz are not measured. These bandwidths are digitally-derived; therefore, their accuracy and shape are guaranteed by design.

ManualsPlus.com

Figure 8-2 Resolution Bandwidth Accuracy and Selectivity Test Setup

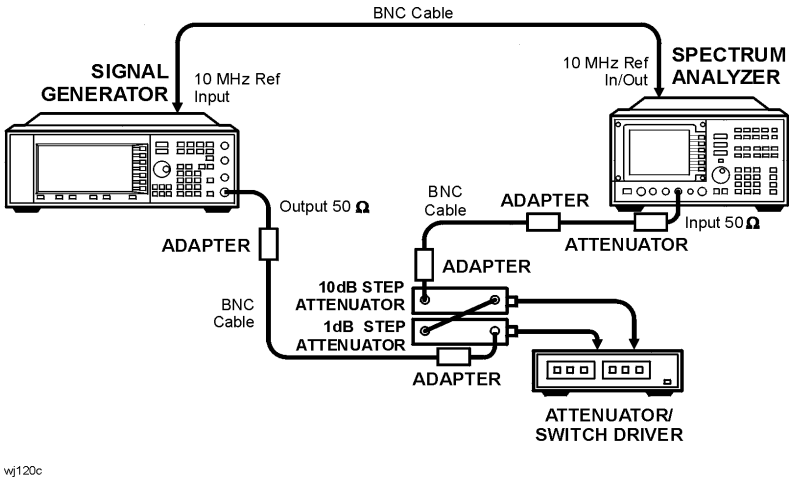

Equipment

Signal Generator E4421B

Attenuator/Switch Driver 11713A

1 dB Precision Step Attenuator . . . . . 8494G, Option 001

10 dB Precision Step Attenuator . . . . . 8496G, Option 001

Attenuator Interconnector Kit 11716A

Adapter

BNC (f) to type N (m) (*3 required*) 1250-1476

Type N (f) to 2.4 mm (f). 11903B

(*for Agilent 8564E/EC and 8565E/EC*)

Cable

BNC, 122 cm (48 in.) *(3 required)*. 10503A

Procedure

1. Connect the equipment as shown in Figure 8-2. The spectrum analyzer provides the frequency reference for the signal generator.

ManualsPlus.com

NOTE The 11713A Attenuator/Switch Driver enables all attenuators upon powering up the device. In order to view the signal, the Switch Driver Attenuator X and Attenuator Y buttons must be off.

2. Set the Agilent E4421B controls as follows:

   Frequency . . . . . 50 MHz

   Amplitude . . . . . –5 dBm

3. Set the 1 dB and 10 dB step attenuators as follows:

   Step Attenuators . . . . . 0 dB

4. On the spectrum analyzer, press **PRESET**, **SAVE, SAVELOCK OFF, CAL**, and **FULL IF ADJ**. Wait for the `IF ADJUST STATUS:` message to disappear. Press **IF ADJ OFF**. Set the controls as follows:

   Center frequency . . . . . 50 MHz

   Span . . . . . 4 MHz

   Log dB/division . . . . . 1 dB

   Resolution BW . . . . . 2 MHz

   Video BW . . . . . 300 Hz

Resolution Bandwidth Accuracy

5. Adjust the Agilent E4421B output amplitude to place the signal two to three divisions (2 dB to 3 dB) below the reference level.
6. On the spectrum analyzer, press **CAL** and **ADJ CURR IF STATE**. Wait for the `IF ADJUST STATUS:` message to disappear before continuing.
7. If the RES BW setting is 3 kHz or less, proceed directly to step 14.
8. Set the Agilent E4421B frequency to F1 as indicated in Table 8-5 for the current RES BW setting of the analyzer.
9. On the spectrum analyzer, press **SAVE, SAVE STATE,** and **STATE 0**, then press **AUTO COUPLE, ALL**, **PEAK SEARCH**, and **MARKER DELTA**.
10. Set the Agilent E4421B frequency to F2 as indicated in Table 8-5 for the current RES BW setting of the analyzer.

ManualsPlus.com

11. On the spectrum analyzer, press **PEAK SEARCH**. Record the Δ MKR frequency reading as the actual SPAN measurement in Table 8-6 for the RES BW setting to be measured.

12. On the spectrum analyzer, press **RECALL**, **RECALL STATE**, and **STATE 0**.

13. Set the Agilent E4421B frequency to 50 MHz.

14. Increase the 1 dB step attenuation to 3 dB. Note the 3 dB attenuator error by subtracting the ideal attenuation from the attenuator calibration value (actual attenuation):

    dB error = Actual attenuation – Ideal attenuation

    Example: –0.041 dB error = 2.959 dB – 3 dB
    dB error = _____

15. On the spectrum analyzer, press **PEAK SEARCH** and **MARKER DELTA**.

16. Decrease the 1 dB step attenuation 3 dB.

17. On the spectrum analyzer, press **SGL SWP** and wait for the completion of a new sweep.

18. Press **MKR** on the spectrum analyzer. Rotate the RPG knob counterclockwise until the Δ MKR amplitude reads 0 dB plus the attenuation error calculated in step 14 ±0.02 dB.

    The marker should be on the left-hand skirt of the signal.

    If the marker cannot be set exactly to 0 dB plus the attenuator error calculated in step 13, note whether the marker is just above or just below the actual –3 dB point.

19. Press **MARKER DELTA**, then rotate the RPG knob clockwise until the Δ MKR amplitude reads 0 dB plus the attenuator error in step 13 ±0.02 dB.

    The active marker should be on the right-hand skirt of the signal.

    If the marker was set just above –3 dB in the previous step, set the marker just below the –3 dB point.

    If the marker was set just below the –3 dB point in the previous step, set the marker just above the –3 dB point.

20. If the RES BW setting is 3 kHz or less, record the Δ MKR frequency reading as the corrected –3 dB bandwidth in Table 8-6 and continue with step 23. There is no need to correct for span accuracy.

21. Record the Δ MKR frequency reading as the measured –3 dB bandwidth in Table 8-6 for the current RES BW setting.

ManualsPlus.com

22. Calculate the corrected –3 dB bandwidth as shown below and record the result in Table 8-6.

    Corr –3 dB BW = (actual span / ideal span) × measured –3 dB BW

    Example:

    Resolution BW Setting = 1 MHz
    Ideal Span = 1.0 MHz
    Actual Span = 1.05 MHz
    Measured –3 dB BW = 913 kHz

    Corr –3 dB BW = (1.05/1.00) × 913 kHz = 958.65 kHz

23. Record the corrected –3 dB bandwidth in Table 8-6 for the current RES BW setting.

24. Calculate the 3 dB BW error shown below and record the result in Table 8-6 for the current RES BW setting.

    3 dB BW error = 100 × (corr'd –3 dB BW – RES BW setting)/RES BW setting

    Following the example above:

    3 dB BW error = 100 × (0.95865 MHz – 1.0 MHz RES BW setting)/1.0 MHz RES BW setting = –4.135%

25. On the spectrum analyzer, press **MKR**, **MARKERS OFF, TRIG**, and **SWEEP CONT**.

26. Repeat step 6 through step 25 for the remaining RES BW and SPAN settings listed in Table 8-5 and Table 8-6.

Resolution Bandwidth Selectivity

27. Set the spectrum analyzer controls as follows:

    Span . . . . . 20 MHz

    Resolution BW . . . . . 2 MHz

    Video BW . . . . . 300 Hz

    Log dB/division . . . . . 10 dB

28. Set the Agilent E4421B as follows:

    Amplitude . . . . . –3 dBm

    Amplitude increment . . . . . 1 dB

ManualsPlus.com

29. On the spectrum analyzer, press **CAL** and **ADJ CURR IF STATE**. Wait for the `IF ADJUST STATUS:` message to disappear before continuing. Press **PEAK SEARCH**.

30. Adjust the E4421B Amplitude until the spectrum analyzer MKR amplitude reads 0 dBm ±1.00 dB.

31. Set the E4421B frequency to F1 as indicated in Table 8-7 for the current spectrum analyzer RES BW setting.

32. On the spectrum analyzer, press **MKR**, **MARKERS OFF**, **SAVE**, **SAVE STATE, STATE 0, AUTO COUPLE**, and **ALL**. If the RES BW setting is now less than 300 Hz, press **BW**, 300, and **Hz**.

33. Press **PEAK SEARCH** and **MARKER DELTA**.

34. Set the E4421B frequency to F2 as indicated in Table 8-7 for the current spectrum analyzer RES BW setting.

35. Press **PEAK SEARCH** on the spectrum analyzer. Record the Δ MKR frequency as the Actual SPAN Measurement in Table 8-8 for the current RES BW setting.

36. On the spectrum analyzer, press **RECALL**, **RECALL STATE**, **STATE 0**.

37. Set the E4421B frequency to 50 MHz.

38. Increase the 10 dB step attenuation to 60 dB. Note the 60 dB attenuator error by subtracting the ideal attenuation from the attenuator calibration value (actual attenuation):

    dB error = Actual attenuation – Ideal attenuation

    Example: –0.175 dB error = 60.175 dB – 60 dB

39. On the spectrum analyzer, press **PEAK SEARCH** and **MARKER DELTA**.

40. Decrease the 10 dB step attenuation to 0 dB.

41. On the spectrum analyzer, press **SGL SWP** and wait for the completion of a new sweep.

42. Press **MKR** on the spectrum analyzer. Rotate the RPG knob counterclockwise until the Δ MKR amplitude reads 0 dB plus the error calculated in step 37 ±0.8 dB. The marker should be on the left-hand skirt of the signal. If the marker cannot be set to exactly 0 dB, note whether the marker is just above or just below the actual –60 dB point.

ManualsPlus.com

43. Press **MARKER DELTA** on the spectrum analyzer. Rotate the RPG knob clockwise until the Δ MKR amplitude reads 0 dB plus the attenuation error calculated in step 38 ±0.8 dB. The active marker should be on the right-hand skirt of the signal. If the marker was set just above the –60 dB point in the previous step, set the marker just below the –60 dB point. If the marker was set just below the –60 dB point in the preceding step, set the marker above the –60 dB point.

44. Record the Δ MKR reading as the Measured –60 dB bandwidth in Table 8-8 for the current RES BW setting.

45. Calculate the corrected –60 dB bandwidth as shown below, then record the result in Table 8-8.

    Corr –60 dB BW = (actual span/ideal span) × measured –60 dB BW

    Example:

    RES BW setting = 1 MHz
    Ideal span = 16 MHz
    Actual span = 17 MHz
    Measured -60 dB BW = 9.82 MHz

    Corr-60 dB BW = (17/16) x 9.82 MHz = 10.43

46. Record the corrected –60 dB BW in Table 8-8 for the current RES BW setting.

47. Calculate the selectivity by dividing the corrected –60 dB BW by the corrected –3 dB BW from Table 8-6, then record the result in Table 8-8.

    Selectivity = corr –60 dB BW / corr –3 dB BW

    Example:

    Selectivity = 10.43 MHz / 0.9415 MHz = 11.08

48. On the spectrum analyzer, press **MKR**, **MARKERS OFF, TRIG**, and **SWEEP CONT**.

49. Repeat step 29 through step 48 for the remaining RES BW and SPAN settings listed in Table 8-7 and Table 8-8.

ManualsPlus.com

Table 8-5 –3 dB Bandwidth Instrument Settings

Spectrum Analyzer Settings		Signal Generator Frequencies		Measurement Uncertainty (%)
RES BW	SPAN	F1 (MHz)	F2 (MHz)	
2 MHz	4 MHz	49.0	51.0	±1.33
1 MHz	2 MHz	49.5	50.5	±1.33
300 kHz	500 kHz	49.85	50.15	±1.33
100 kHz	200 kHz	49.95	50.05	±1.33
30 kHz	50 kHz	49.985	50.015	±1.33
10 kHz	20 kHz	49.995	50.005	±1.33
3 kHz	5 kHz	N/A	N/A	±1.33
1 kHz	2 kHz	N/A	N/A	±1.33
300 Hz	600 Hz	N/A	N/A	±1.33

Table 8-6 –3 dB Bandwidth Measurement Data

RES BW Setting	Span Measurement		–3 dB BW Measurement		3 dB BW Error (%)
	Ideal	Actual	Measured	Corrected	
2 MHz	2 MHz	MHz	MHz	MHz	
1 MHz	1.0 MHz	MHz	Hz	MHz	
300 kHz	300 kHz	kHz	KHz	kHz	
100 kHz	100 kHz	kHz	KHz	kHz	
30 kHz	30 kHz	kHz	KHz	kHz	
10 kHz	10 kHz	kHz	KHz	kHz	
3 kHz*	N/A	N/A	KHz	N/A	
1 kHz*	N/A	N/A	Hz	N/A	
300 Hz*	N/A	N/A	Hz	N/A	

*Span Error Measurement not required for RES BW settings of 3 kHz and less.

ManualsPlus.com

Table 8-7 –60 dB Bandwidth Instrument Settings

Spectrum Analyzer Settings		Signal Generator Frequencies		Measurement Uncertainty (%)
RES BW	SPAN	F1 (MHz)	F2 (MHz)	
2 MHz	20 MHz	45.0	55.0	±2.8
1 MHz	20 MHz	42.0	58.0	±2.8
300 kHz	5 MHz	48.0	52.0	±2.8
100 kHz	2 MHz	49.2	50.8	±2.8
30 kHz	500 kHz	49.8	50.2	±2.8
10 kHz	200 kHz	49.92	50.08	±2.8
3 kHz	50 kHz	49.98	50.02	±2.8
1 kHz	20 kHz	49.992	50.008	±2.8
300 Hz	5 kHz	49.998	50.002	±2.8

Table 8-8 –60 dB Bandwidth Measurement Data

RES BW Setting	Span Measurement		–60 dB Bandwidth		Selectivity
	Ideal	Actual	Measured	Corrected	
2 MHz	10 MHz	MHz	MHz	MHz	
1 MHz	16 MHz	MHz	MHz	MHz	
300 kHz	4 MHz	MHz	MHz	MHz	
100 kHz	1.6 MHz	MHz	Hz	Hz	
30 kHz	400 kHz	kHz	kHz	kHz	
10 kHz	160 kHz	kHz	kHz	kHz	
3 kHz	40 kHz	kHz	kHz	kHz	
1 kHz	16 kHz	kHz	kHz	kHz	
300 Hz	4 kHz	kHz	kHz	kHz	

ManualsPlus.com

13a. Input Attenuator Switching Uncertainty: 8560E/EC, 8561E/EC, 8562E/EC, and 8563E/EC

Instrument Under Test

8560E/EC
8561E/EC
8562E/EC
8563E/EC

Related Specification

Input Attenuator Switching Uncertainty

Related Adjustment

There is no related adjustment procedure for this performance test.

Description

This test measures the input attenuator switching uncertainty over the full 70 dB range at 50 MHz. The signal generator is phase-locked to the spectrum analyzer 10 MHz reference. Switching uncertainty is referenced to the 10 dB attenuator setting. The calibrated precision step attenuators are the measurement standard.

The input attenuator switching uncertainty at 2.9 GHz is measured using IF substitution. The IF gains are characterized at 50 MHz.

ManualsPlus.com

Figure 8-3 Input Attenuator Test Setup, 50 MHz

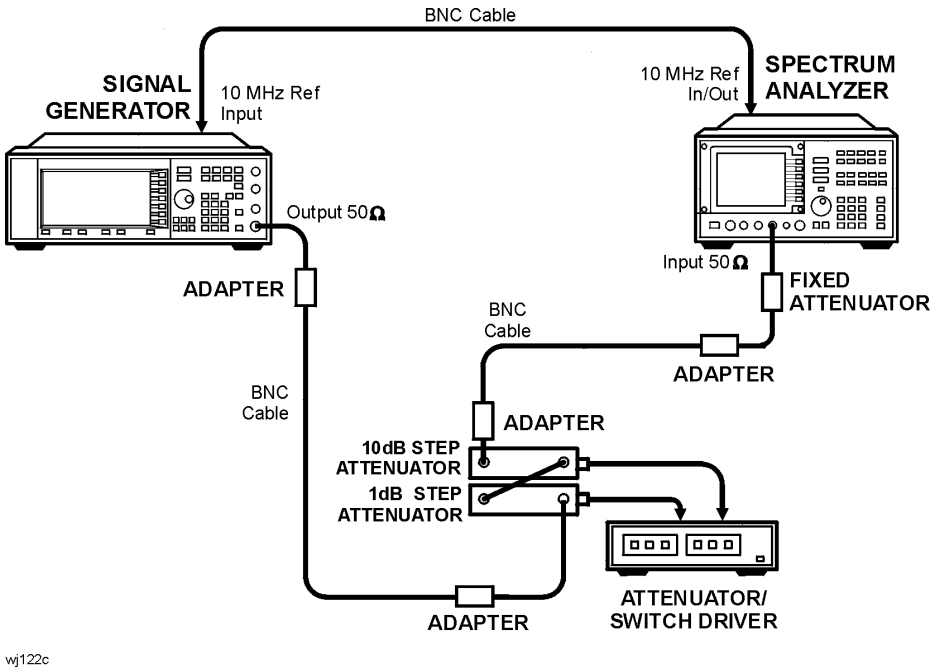

Figure 8-4 Input Attenuator Test Setup, >50 MHz

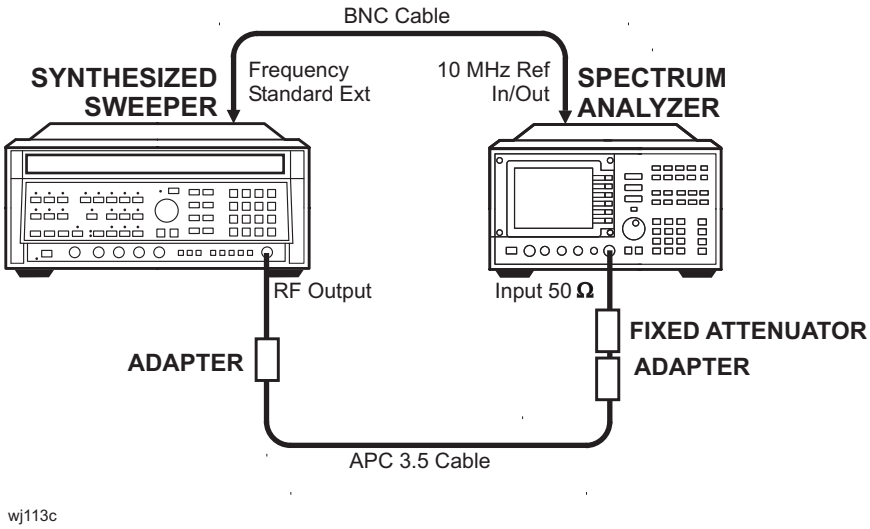

Equipment

Synthesized sweeper 83640B

Signal Generator E4421B

Attenuator/Switch Driver 11713A

1 dB Precision Step Attenuator. . . . . 8494G, Option 001

10 dB Precision Step Attenuator. . . . . 8496G, Option 001

ManualsPlus.com

Attenuator Interconnector Kit 11716A

20 dB coaxial fixed attenuator . . . . . .8491B (Option 020)

10 dB coaxial fixed attenuator . . . . . .8491B (Option 010)

Adapters

Type N (m) to BNC (f) (*4 required*). 1250-1476

Type N (m) to APC 3.5 (f) 1250-1744

APC 3.5 (f) to APC 2.4 (f) 11901B

Cables

BNC, 122 cm (48 in.) *(3 required)*. 10503A

APC 3.5 mm (36 in.) 8120-4921

Procedure

Attenuator Switching Uncertainty (50 MHz)

1. Connect the equipment as shown in Figure 8-3 using the Agilent 8491B Option 020. The spectrum analyzer provides the frequency reference for the E4421B.
2. Set the E4421B controls as follows:

   Frequency . . . . . .50 MHz

   Amplitude . . . . . 10 dBm
3. Set the step attenuators to 60 dB.
4. On the spectrum analyzer, press **PRESET, CAL** and **REALIGN LO &IF**. Wait for adjustments to complete. Then, set the controls as follows:

   Center frequency . . . . . .50 MHz

   Span . . . . . 0 Hz

   Reference level . . . . . .–70 dBm

   Log dB/division . . . . . .1 dB

   Resolution BW . . . . . 3 kHz

   Video BW . . . . . 1 Hz

ManualsPlus.com

5. Set the 1 dB step attenuator to 0 dB.
6. Adjust the source amplitude to place the signal 2 to 3 dB (two to three divisions) below the spectrum analyzer reference level.
7. Enter the actual attenuation for the 10 dB attenuator setting (calibration data) into Table 8-9.

   For the 40 dB attenuator setting, use the attenuator calibration data section 4 setting and data.
8. To determine the values to be entered for each ideal Δ MKR reading in Table 8-9, subtract the actual attenuation value from the attenuation value of the 10 dB step attenuator recorded for the 60 dB step.
9. On the spectrum analyzer, press **SGL SWP** and **SGL SWP**.
10. Wait for a new sweep to finish. Press **MKR** and **MARKER DELTA**.
11. Set the 10 dB step attenuator to the next setting, as indicated under 10 dB step attenuator setting in Table 8-9.
12. On the spectrum analyzer, set the reference level and the input attenuation to the next settings as indicated in Table 8-9 as follows:

    a. Press **AMPLITUDE** and **REF LVL,** then enter the indicated value and press –**dBm**.

    b. Press **ATTEN**, then enter the indicated value and press **dB**.
13. On the spectrum analyzer, press **SGL SWP**.
14. Wait for a sweep to finish. Record the Δ MKR amplitude in Table 8-9 as the actual Δ MKR reading.
15. Repeat step 11 through step 14 for each 10 dB step attenuator setting in Table 8-9.
16. For each analyzer attenuator setting in Table 8-9, other than 10 dB, subtract the actual Δ MKR reading from the ideal Δ MKR reading and record the result as the cumulative switching uncertainty (CSU).

    CSU = ideal Δ MKR reading – corrected Δ MKR reading
17. For each analyzer attenuator setting from 20 dB through 70 dB in Table 8-9, subtract the CSU value of the preceding setting from the current CSU value and record the result in incremental switching uncertainty (ISU) column.

    ISU = current CSU – previous CSU

ManualsPlus.com

18. Set the step attenuator to 0 dB.

19. Set the E4421B controls as follows:

    Frequency ..... 50 MHz

    Amplitude ..... +5 dBm

    RF Output ..... On

20. On the spectrum analyzer, press **PRESET**, **CAL, REALIGN LO AND IF**. Wait for adjustments to complete. Then, set the controls as follows:

    Center frequency ..... 50 MHz

    Span ..... 0 Hz

    Reference level ..... –10 dBm

    Attenuation ..... 0 dB

    Log dB/division ..... 1 dB

    Resolution BW ..... 1 kHz

    Video BW ..... 1 Hz

21. Set the 1 dB step attenuator to 5 dB and replace the 8491B Option 020 with the 8491B Option 010 10 dB attenuator.

22. Adjust the source amplitude to place the signal 2 to 3 dB (two to three divisions) below the reference level.

23. On the spectrum analyzer, press **MKR** and **MARKER DELTA**.

24. Enter the actual 10 dB step attenuator values in Table 8-10 using the attenuator calibration data.

    For the 40 dB attenuator step, use the attenuator calibration data section 4 setting and data.

25. Set the 10 dB step attenuator and the spectrum analyzer **REF LVL** according to Table 8-10. Record the spectrum analyzer Δ MKR reading for each setting as the actual Δ MKR reading.

26. For each 10 dB step attenuator setting in Table 8-10, add the Δ MKR reading to the actual 10 dB step attenuator value. Record the result as the IF gain deviation.

ManualsPlus.com

Calculating IF Gain Correction

27. Calculate and record the IF gain correction factors in Table 8-11 as described in the following steps:
28. For each IF gain correction entry, there is a pair of numbers in parentheses. These numbers represent spectrum analyzer REF LVL settings from Table 8-10.
29. Look up the IF gain deviation values in Table 8-10 that correspond to these REF LVL settings.
    a. Substitute test values for the numbers in parentheses in the IF gain correction entry and calculate the correction value.
30. As an example, when calculating the IF gain correction for the 20 dB ATTEN setting, look up the IF gain deviation values listed in Table 8-10 for the –30 dBm and –20 dBm REF LVL settings.

    If the IF gain deviation for the –30 dBm REF LVL is +0.2 dB and the IF gain deviation for the –20 dBm REF LVL is –0.3 dB, then the IF gain correction for the 20 dB ATTEN setting is:

$$(+0.2) - (-0.3) = +0.5 \text{ dB}$$

Input Attenuator Switching Uncertainty, 2.9 GHz

31. Connect the equipment as shown in Figure 8-4 using the 8491B Option 010 10 dB attenuator. The spectrum analyzer provides the frequency reference for the 83640B.
32. On the spectrum analyzer, press **FREQUENCY**, 2.9, and **GHz**.
33. On the spectrum analyzer, press **AMPLITUDE,** 10, –**dBm, ATTEN,** 10, **+dBm**, **MKR**, and **MARKERS OFF**.
34. On the Agilent 83640B, press **INSTR PRESET** and set the controls as follows:

    CW frequency . . . . . 2.9 GHz

    Power level. . . . . 0 dBm
35. On the spectrum analyzer, press **MKR**.
36. Adjust the 83640B **POWER LEVEL** for a spectrum analyzer MKR amplitude reading of –13 dBm ±0.05 dB.
37. On the spectrum analyzer, press **MKR**, **MARKER DELTA**, **AMPLITUDE, ATTEN,** 20, **dB**.

ManualsPlus.com

38. After a new sweep has finished, record the spectrum analyzer Δ MKR amplitude reading in Table 8-11 as the Δ MKR Reading.

39. Set the spectrum analyzer **ATTEN** to the settings indicated in Table 8-11. Repeat step 38 for each ATTEN setting.

40. For each ATTEN setting in Table 8-11, subtract the IF gain correction from the Δ MKR reading and record the result as the CSU.

41. For each analyzer attenuator setting from 20 dB through 70 dB, subtract the CSU value of the preceding setting from the current CSU value and record the result in Table 8-11 as the ISU.

ISU = current CSU – previous CSU

Table 8-9 Input Attenuator Switching Accuracy, 50 MHz

10 dB Step Attenuator Setting	Spectrum Analyzer		10 dB Step Attenuator Actual Attenuation	Δ MKR		Results		Uncertainty
	REF LVL	Atten		Ideal	Actual	CSU	ISU	Measurement
(dB)	(dBm)	(dB)	(dB)	(dB)	(dB)	(dB)	(dB)	(dB)
60	–70	10		0 (Ref.)	0 (Ref.)	0 (Ref.)	0 (Ref.)	0 (Ref.)
50	–60	20						±0.14
40	–50	30						±0.14
30	–40	40						±0.12
20	–30	50						±0.12
10	–20	60						±0.12
0	–10	70						±0.12

ManualsPlus.com

Table 8-10 IF Gain Deviation

Spectrum Analyzer Ref Lvl (dBm)	10 dB Step Attenuator Setting (dB)	10 dB Step Attenuator Actual (dB)	Δ MKR Reading (dB)	IF Gain Deviation (dB)
–10	0	0 (Ref.)	0 (Ref.)	0 (Ref.)
–20	10			
–30	20			
–40	30			
–50	40			
–60	50			
–70	60			
–80	70			

Table 8-11 Input Attenuator Switching Uncertainty, 2.9 GHz

Spectrum Analyzer ATTEN (dB)	Δ MKR Reading (dB)	IF Gain Correction (dB)	Uncertainty		
			CSU (dB)	ISU (dB)	Measurement (dB)
10	0 (Ref.)	0 (Ref.)	0 (Ref.)	0 (Ref.)	0 (Ref.)
20		[(–30)– (–20)]			±0.23
30		[(–40)– (–20)]			±0.23
40		[(–50)– (–20)]			±0.23
50		[(–60)– (–20)]			±0.23
60		[(–70)– (–20)]			±0.24
70		[(–80)– (–20)]			±0.24

ManualsPlus.com

14a. Input Attenuator Switching Uncertainty: 8564E/EC and 8565E/EC

Instrument Under Test

8564E/EC
8565E/EC

Related Specification

Input Attenuator Switching Uncertainty

Related Adjustment

There is no related adjustment procedure for this performance test.

Description

This test measures the input attenuator switching uncertainty over the full 70 dB range at 50 MHz. The signal generator is phase-locked to the spectrum analyzer 10 MHz reference. Switching uncertainty is referenced to the 10 dB attenuator setting. The calibrated precision step attenuators are the measurement standard.

The input attenuator switching uncertainty at 2.9 GHz is measured using IF substitution. The IF gains are characterized at 50 MHz.

ManualsPlus.com

Figure 8-5 **Input Attenuator Test Setup, 50 MHz**

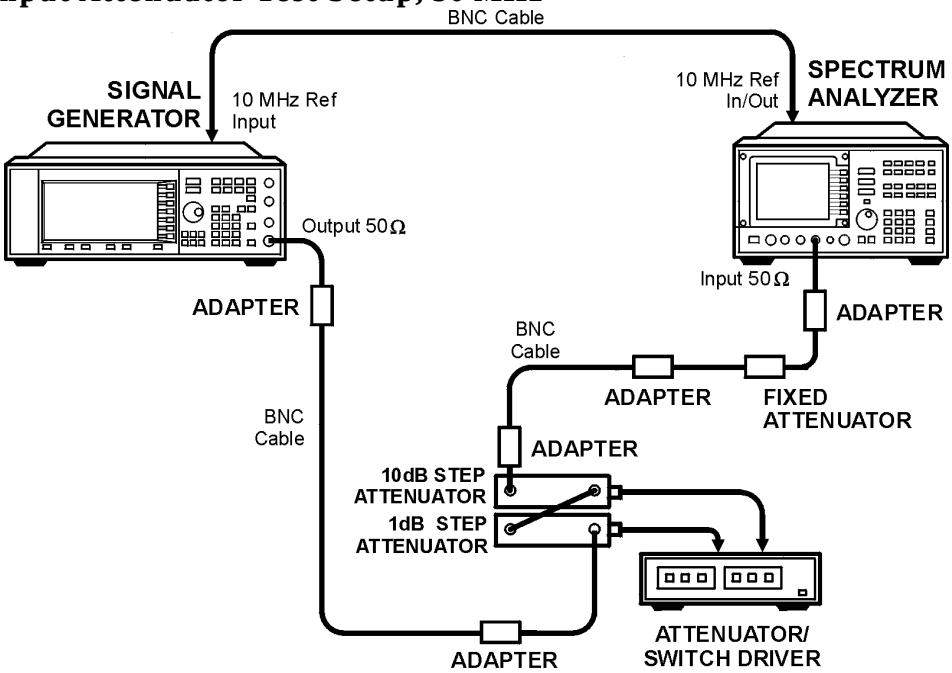

Figure 8-6 **Input Attenuator Test Setup, >50 MHz**

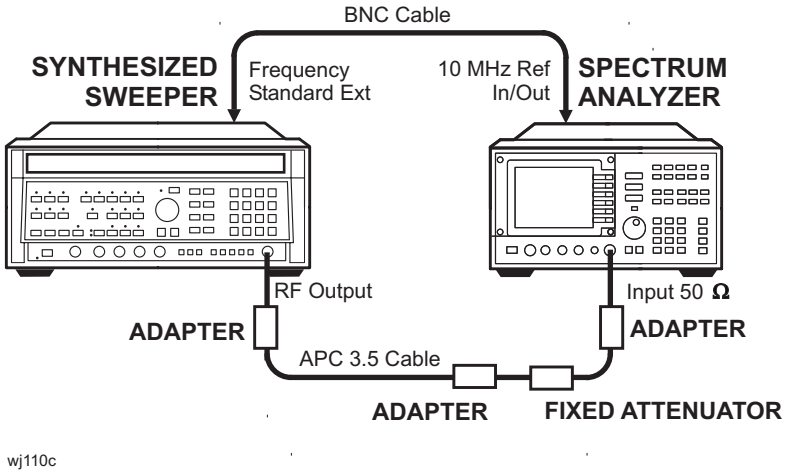

Equipment

Synthesized sweeper 83640B

Signal Generator E4421B

Attenuator/Switch Driver 11713A

1 dB Precision Step Attenuator. . . . . 8494G, Option 001

10 dB Precision Step Attenuator. . . . . 8496G, Option 001

ManualsPlus.com

Attenuator Interconnector Kit 11716A

20 dB coaxial fixed attenuator . . . . . .8491B (Option 020)

10 dB coaxial fixed attenuator . . . . . .8491B (Option 010)

Adapters

Type N (m) to BNC (f) (*4 required*). 1250-1476

Type N (m) to APC 3.5 (f) 1250-1744

APC 2.4 (f) to APC 3.5 (f) 11901B

Type N (f) to 2.4 mm (f). 11903B

Cables

BNC, 122 cm (48 in.) *(3 required)*. 10503A

APC 3.5 mm. 8120-4921

Procedure

Attenuator Switching Uncertainty (50 MHz)

1. Connect the equipment as shown in Figure 8-5 using the 8491B Option 020. The spectrum analyzer provides the frequency reference for the E4421B.
2. Set the E4421B controls as follows:

   Frequency . . . . . .50 MHz

   Amplitude . . . . . 10 dBm

   RF Output. . . . . .On
3. Set the step attenuators as follows:

   Step Attenuators . . . . . .50 dB

ManualsPlus.com

4. On the spectrum analyzer, press **PRESET**, **CAL,** and **REALIGN LO &IF**. Wait for adjustments to complete. Then, set the controls as follows:

   Center frequency . . . . . 50 MHz

   Span . . . . . 0 Hz

   Reference level. . . . . –60 dBm

   Log dB/division . . . . . 1 dB

   Resolution BW . . . . . 3 kHz

   Video BW . . . . . 1 Hz

5. Set the 1 dB step attenuator to 0 dB.
6. Adjust the source amplitude to place the signal 2 to 3 dB (two to three divisions) below the spectrum analyzer reference level.
7. Enter the actual attenuation for the 10 dB attenuator setting (calibration data) into Table 8-12.

   For the 40 dB attenuator setting, use the attenuator calibration data section 4 setting and data.

8. To determine the values to be entered for each ideal Δ MKR reading in Table 8-12, subtract the 10dB attenuation actual value from the 10dB step attenuator actual value recorded for the 50 dB step.
9. On the spectrum analyzer, press **SWP**, and **SGL SWP**.
10. Wait for a new sweep to finish. Press **MKR** and **MARKER DELTA**.
11. Set the 10 dB step attenuator to the next setting, as indicated under 10 dB step attenuator setting in Table 8-9.
12. On the spectrum analyzer, set the reference level and the input attenuation to the next settings as indicated in Table 8-12 as follows:

    a. Press **AMPLITUDE** and **REF LVL,** then enter the indicated value and press **–dBm**.

    b. Press **ATTEN**, then enter the indicated value and press **dB**.

13. On the spectrum analyzer, press **SGL SWP**.
14. Wait for a sweep to finish. Record the Δ MKR amplitude in Table 8-12 as the actual Δ MKR reading.
15. Subtract the 10dB step attenuation actual attenuator value from the 10 dB step attenuator setting and add the difference to the actual Δ MKR reading, then record the sum as the corrected Δ MKR reading in Table 8-12.
16. Repeat step 11 through step 14 for each row of instrument settings in Table 8-12.

ManualsPlus.com

17. For each analyzer attenuator setting in Table 8-12, other than 10 dB, subtract the corrected Δ MKR reading from the ideal Δ MKR reading and record the result as the cumulative switching uncertainty (CSU).

    CSU = ideal Δ MKR reading – corrected Δ MKR reading

18. For each analyzer attenuator setting from 20 dB through 70 dB in Table 8-12, subtract the CSU value of the preceding setting from the current CSU value and record the result in incremental switching uncertainty (ISU) column.

    ISU = current CSU – previous CSU

19. Set the E4421B controls as follows:

    Frequency . . . . . 50 MHz

    Amplitude . . . . . +5 dBm

    Step Attenuators . . . . . 0 dB

    RF Output . . . . . On

20. On the spectrum analyzer, press **PRESET**, **CAL**, and **REALIGN LO AND IF**. When adjustments are complete, set the controls as follows:

    Center frequency . . . . . 50 MHz

    Span . . . . . 0 Hz

    Reference level . . . . . –10 dBm

    Attenuation . . . . . 0 dB

    Log dB/division . . . . . 1 dB

    Resolution BW . . . . . 1 kHz

    Video BW . . . . . 1 Hz

21. Set the 1 dB attenuator to 5 dB and replace the 8491B Option 020 with the 8491B Option 010 10 dB attenuator.

22. Adjust the source amplitude to place the signal 2 to 3 dB (two to three divisions) below the reference level.

23. On the spectrum analyzer, press **MKR** and **MARKER DELTA**.

24. Enter the actual 10 dB step attenuator values in Table 8-13 using the attenuator calibration data.

    For the 40 dB attenuator step, use the attenuator calibration data section 4 setting and data.

ManualsPlus.com

25. Set the 10 dB step attenuator and the spectrum analyzer **REF LVL** according to Table 8-13. Record the spectrum analyzer Δ MKR reading for each setting as the actual Δ MKR reading.

26. For each 10 dB step attenuator setting in Table 8-13, add the Δ MKR reading to the actual 10 dB step attenuator value. Record the result as the IF gain deviation.

    a. Repeat Step 23-25 for each row of instrument settings in table 2a-12.

Calculating IF Gain Correction

27. Calculate and record the IF gain correction factors in Table 8-14 as described in the following steps:

    a. For each IF gain correction entry, there is a pair of numbers in parentheses. These numbers represent spectrum analyzer REF LVL settings from Table 8-13.

    b. Look up the IF gain deviation values in Table 8-13 that correspond to these REF LVL settings.

    c. Substitute test values for the numbers in parentheses in the IF gain correction entry and calculate the correction value.

       As an example, when calculating Table 8-14 IF gain correction for the 20 dB ATTEN setting, look up the IF gain deviation values listed in Table 8-13 for the –30 and –20 dBm REF LVL settings.

       If the IF gain deviation for the –30 dBm REF LVL is +0.2 dB and the IF gain deviation for the –20 dBm REF LVL is –0.3 dB, then the IF gain correction for the 20 dB ATTEN setting is:

       $$(+0.2) - (-0.3) = +0.5 \text{ dB}$$

ManualsPlus.com

Input Attenuator Switching Uncertainty, 2.9 GHz

28. Connect the equipment as shown in Figure 8-6 using the 8491B Option 010 10 dB attenuator. The spectrum analyzer provides the frequency reference for the 83640B.

29. On the spectrum analyzer press, **MKR** and **MARKERS OFF**.

30. On the spectrum analyzer press:

    Frequency . . . . . .2.9 GHz

    Amplitude . . . . . .–10 dBm

    Attenuation. . . . . 10 dBm

31. On the 83640B, press **INSTR PRESET** and set the controls as follows:

    CW frequency . . . . . .2.9 GHz

    Power level . . . . . 0 dBm

32. On the spectrum analyzer, press **MKR**.

33. Adjust the Agilent 83640B **POWER LEVEL** for a spectrum analyzer MKR amplitude reading of –13 dBm ±0.05 dB.

34. On the spectrum analyzer, press **MKR**, **MARKER DELTA**, **AMPLITUDE, ATTEN,** 20, and **dB**.

35. After a new sweep has finished, record the spectrum analyzer Δ MKR amplitude reading in Table 8-14 as the Δ MKR Reading (column 2).

36. Set the spectrum analyzer **ATTEN** to the settings indicated in Table 8-14. Repeat step 30 for each ATTEN setting.

37. For each ATTEN setting in Table 8-14, subtract the IF gain correction from the actual Δ MKR reading and record the result as the CSU.

38. For each attenuator setting from 20 through 60 dB, subtract the CSU value of the preceding setting from the current CSU value and record the result in Table 8-14 as the incremental switching uncertainty (ISU).

    ISU = current CSU – previous CSU

ManualsPlus.com

Table 8-12 Input Attenuator Switching Accuracy, 50 MHz

10 dB Step Attenuator Setting (dB)	Spectrum		10 dB Step Attenuator Actual Attenuation (dB)	Δ MKR Reading			Uncertainty		
	REF LVL (dBm)	Atten (dB)		Ideal (dB)	Actual (dB)	Corrected (dB)	CSU (dB)	ISU (dB)	Measurement (dB)
60	–70	10		0 (Ref.)	0 (Ref.)	0 (Ref.)	0 (Ref.)	0 (Ref.)	0 (Ref.)
50	–60	10		0 (Ref.)	0 (Ref.)	0 (Ref.)	0 (Ref.)	0 (Ref.)	0 (Ref.)
40	–50	20							±0.14
30	–40	30							±0.12
20	–30	40							±0.12
10	–20	50							±0.12
0	–10	60							±0.12

ManualsPlus.com

Table 8-13 IF Gain Deviation

Spectrum Analyzer Ref Lvl (dBm)	10 dB Step Attenuator Setting (dB)	10 dB Step Attenuator Actual (dB)	Δ MKR Reading (dB)	IF Gain Deviation (dB)
–10	0	0 (Ref.)	0 (Ref.)	0 (Ref.)
–20	10			
–30	20			
–40	30			
–50	40			
–60	50			
–70	60			

Table 8-14 Input Attenuator Switching Uncertainty, 2.9 GHz

Spectrum Analyzer ATTEN (dB)	Δ MKR Reading (dB)	IF Gain Correction (dB)	Uncertainty		
			CSU	ISU	Measurement
10	0 (Ref.)	0 (Ref.)	0 (Ref.)	0 (Ref.)	0 (Ref.)
20		[(–30)– (–20)]			±0.23
30		[(–40)– (–20)]			±0.23
40		[(–50)– (–20)]			±0.23
50		[(–60)– (–20)]			±0.23
60		[(–70)– (–20)]			±0.24

ManualsPlus.com

15a. IF Gain Uncertainty

Instrument Under Test

All 8560 E-Series and EC-Series

Related Specification

IF Gain Uncertainty

Related Adjustment

IF Amplitude Adjustment

Description

This test measures the log (10 dB and 1 dB) and linear IF gain uncertainties. A 0 dBm signal is displayed near the reference level for each test. The input signal level is decreased as the spectrum analyzer reference level is decreased (IF gain increased). Since the signal level decreases in accurate steps, any error between the reference level and the signal level is caused by the analyzer IF gain. The signal generator is phase-locked to the spectrum analyzer 10 MHz reference.

Figure 8-7 **IF Gain Uncertainty Test Setup**

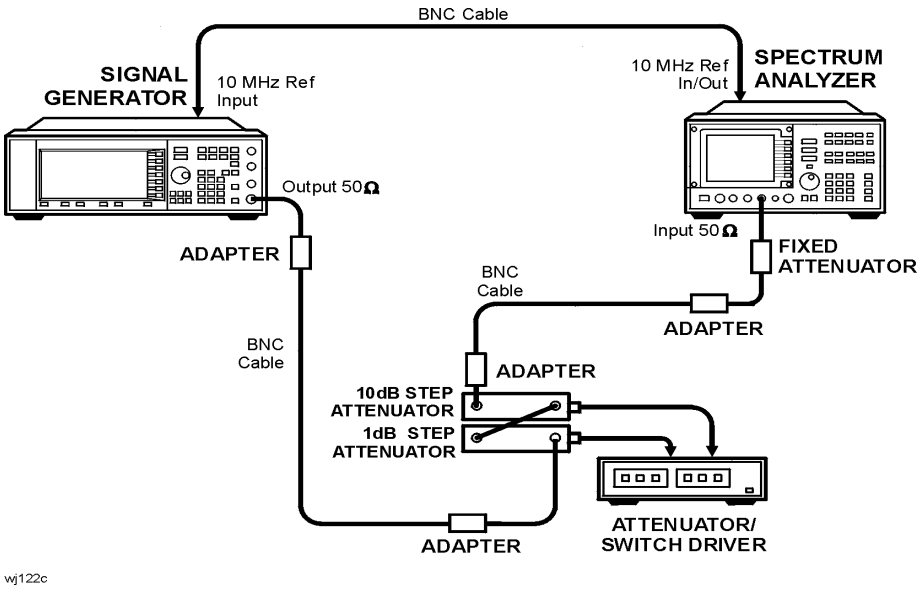

ManualsPlus.com

Equipment

Signal generator . . . . . .Agilent E4421B

10 dB coaxial fixed attenuator . . . . . .Agilent 8491B, Option 010

Attenuator/Switch Driver . . . . . Agilent 11713A

1 dB Precision Step Attenuator . . . . . .Agilent 8494G, Option 001

10 dB Precision Step Attenuator . . . . .Agilent 8496G, Option 001

Attenuator Interconnector Kit . . . . . Agilent 11716A

Adapter

Type N (m) to BNC (f) (*4 required*). 1250-1476

Type N (f) to 2.4 mm (f). . . . . Agilent 11903B

(*for Agilent 8564E/EC and Agilent 8565E/EC*)

Cable

BNC, 122 cm (48 in.) *(3 required)*. . . . . Agilent 10503A

Procedure

1. Connect the equipment as shown in Figure 8-7. The spectrum analyzer under test provides the frequency reference for the Agilent E4421B.

Log Gain Uncertainty (10 dB Steps)

2. Set the Agilent E4421B controls as follows:

   Frequency . . . . . .50 MHz

   Amplitude . . . . . +10 dB

   RF Output. . . . . .On

3. On the spectrum analyzer, press **PRESET, CAL,** and **REALIGN LO &IF**. Wait for the adjustments to finish.

ManualsPlus.com

4. Set the controls as follows:

   Center frequency . . . . . 50 MHz

   Span . . . . . 0 Hz

   Log dB/division . . . . . 1 dB

   Resolution BW . . . . . 1 kHz

   Video BW . . . . . 1 Hz

5. Set the step attenuators to 0 dB attenuation.
6. On the spectrum analyzer, press **MKR**.
7. Adjust the source amplitude to place the peak of the signal 2 to 3 dB (two to three divisions) below the spectrum analyzer reference level.
8. On the spectrum analyzer, press **SGL SWP**, **SGL SWP, MKR,** and **MARKER DELTA**.
9. Increase the 10 dB step attenuator setting by 10 dB.
10. Set spectrum analyzer reference level: **AMPLITUDE, REF LVL**, 10, –**dBm**, and **SGL SWP**. Wait for the sweep to finish.
11. Record the spectrum analyzer Δ MKR amplitude reading in Table 8-15 as the actual Δ MKR reading.
12. Repeat step 9 through step 11 for the remaining spectrum analyzer REF LVL settings listed in Table 8-15.
13. Enter the calibrated attenuation values as the actual 10 dB attenuation in Table 8-15 using the appropriate calibration data for the 10 dB step attenuator.

    For the 40 dB attenuator step, use the attenuator calibration data section 4 setting and data.
14. Calculate the values for the corrected delta marker entries in Table 8-15 as follows:

    a. Calculate the attenuation error by subtracting the delta marker reading from the step attenuator setting.

       Atten Error = 10 dB step atten setting – Actual atten

    b. Calculate the corrected delta marker by subtracting the attenuation error from the actual delta marker reading.

       Corrected Δ marker = Actual Δ marker reading – Atten error

    c. Record this value as the corrected Δ marker value in Table 8-15

ManualsPlus.com

Log Gain Uncertainty (1 dB Steps)

15. On the Agilent E4421B, set the amplitude to 10 dB.
16. Set the step attenuators to 0 dB.
17. Set the spectrum analyzer controls as follows:

    Marker . . . . . normal

    Reference level . . . . . 0 dBm

    Log dB/division . . . . . .1 dB

    Trigger . . . . . Continuous

18. Adjust the Agilent E4421B in 1 dB steps to place the signal 2 dB to 3 dB (two to three divisions) below the spectrum analyzer reference level.
19. On the spectrum analyzer, press **SGL SWP**, **SGL SWP**, **MKR**, and **MARKER DELTA**.
20. Increase the step attenuator setting by 1 dB.
21. On the spectrum analyzer, press **AMPLITUDE,** ⇓, and **SGL SWP**. Wait for the sweep to finish.
22. Record the spectrum analyzer Δ MKR amplitude reading in Table 8-16 as the actual Δ MKR reading.
23. Repeat step 20 through step 22 for the remaining spectrum analyzer REF LVL settings listed in Table 8-16.
24. Enter the calibrated attenuation values as the actual 1 dB attenuation in Table 8-16 using the appropriate calibration data for the 1 dB step attenuator.

    For the 40 dB attenuator step, use the attenuator calibration data section 4 setting and data.
25. Calculate the values for the corrected delta marker entries in Table 8-16 as follows:

    a. Calculate the attenuation error by subtracting the delta marker reading from the step attenuator setting.

       Atten Error = 1 dB step atten setting – Actual atten

    b. Calculate the corrected delta marker by subtracting the attenuation error from the actual delta marker reading.

       Corrected Δ marker = Actual Δ marker reading – Atten error

    c. Record this value as the corrected Δ marker value in Table 8-16

ManualsPlus.com

Linear Gain Uncertainty

26. On the Agilent E4421B, set the amplitude to 10 dB
27. Set the step attenuators to 0 dB.
28. Set the controls on the spectrum analyzer under test to the following:

    Marker . . . . . normal

    Reference level. . . . . 0 dBm

    Amplitude scale . . . . . linear

    Amplitude . . . . . dBm

    Trigger . . . . . Continuous

29. Adjust the Agilent E4421B amplitude in 1 dB steps to place the signal two to three divisions below the spectrum analyzer reference level. The marker should read between –2 dBm and –3 dBm.
30. On the spectrum analyzer, press **SGL SWP, SGL SWP**, **MKR,** and **MARKER DELTA**.
31. Increase the 10 dB step attenuator setting by 10 dB.
32. Set the spectrum analyzer REF LVL to –10 dBm.
33. On the spectrum analyzer, press **SGL SWP**.
34. Record the spectrum analyzer Δ MKR amplitude reading in Table 8-17 as the actual Δ MKR reading.
35. Repeat step 31 through step 34 for the remaining spectrum analyzer REF LVL settings listed in Table 8-17.
36. Enter the calibrated attenuation values as the actual 10 dB attenuation in Table 8-17 using the appropriate calibration data for the 10 dB step attenuator.

    For the 40 dB attenuator step, use the attenuator calibration data section 4 setting and data.

ManualsPlus.com

37. Calculate the values for the corrected delta marker entries in Table 8-17 as follows:

   a. Calculate the attenuation error by subtracting the delta marker reading from the step attenuator setting.

      Atten Error = 10 dB step atten setting – Actual atten

   b. Calculate the corrected delta marker by subtraction the attenuation error from the actual delta marker reading.

      Corrected Δ marker = Actual Δ marker reading – Atten Error

   c. Record this value as the corrected Δ marker value in Table 8-17

ManualsPlus.com

Table 8-15 Log IF Gain Uncertainty (10 dB Steps)

Spectrum Analyzer REF LVL (dBm)	10 dB Step Attenuator Setting (dB)	10 dB Step Attenuator Actual Attenuation (dB)	Δ MKR Reading Actual (dB)	Δ MKR Reading Corrected (dB)	Measurement Uncertainty (dB)
0	0	0 (Ref.)	0 (Ref.)	0 (Ref.)	0 (Ref.)
–10	10				±0.11
–20	20				±0.11
–30	30				±0.11
–40	40				±0.11
–50	50				±0.12
–60	60				±0.12
–70	70				±0.12
–80	80				±0.12

Table 8-16 Log IF Gain Uncertainty (1 dB Steps)

Spectrum Analyzer REF LVL (dBm)	1 dB Step Attenuator Setting (dB)	1 dB Step Attenuator Actual Attenuation (dB)	Δ MKR Reading Actual (dB)	Δ MKR Reading Corrected (dB)	Measurement Uncertainty (dB)
0	0	0 (Ref.)	0 (Ref.)	0 (Ref.)	0 (Ref.)
–1	1				±0.11
–2	2				±0.11
–3	3				±0.11
–4	4				±0.11
–5	5				±0.12
–6	6				±0.12
–7	7				±0.12
–8	8				±0.12
–9	9				±0.12
–10	10				±0.12
–11	11				±0.12
–12	12				±0.12

ManualsPlus.com

Table 8-17 Linear IF Gain Uncertainty

Spectrum Analyzer REF LVL (dBm)	10 dB Step Attenuator Setting (dB)	10 dB Step Attenuator Actual Attenuation (dB)	Δ MKR Reading Actual (dB)	Δ MKR Reading Corrected (dB)	Measurement Uncertainty (dB)
0	0	0 (Ref.)	0 (Ref.)	0 (Ref.)	0 (Ref.)
–10	10				±0.11
–20	20				±0.11
–30	30				±0.11
–40	40				±0.11
–50	50				±0.12
–60	60				±0.12
–70	70				±0.12
–80	80				±0.12

ManualsPlus.com

16a. Scale Fidelity

Instrument Under Test

All 8560 E-Series and EC-Series

Related Specification

Log Fidelity
Linear Fidelity

Related Adjustment

IF Amplitude Adjustments
Log Amplifier Adjustments

Description

The 10 dB/div, 2 dB/div, and linear scales are tested for fidelity. The 10 dB/div scale is tested in RES BW settings of 10 Hz and 300 Hz. A signal is set to the reference level for each scale. As the signal amplitude is decreased, the displayed signal amplitude is compared to the reference level.

Incremental log fidelity is calculated from the cumulative log fidelity data. The nominal difference between the cumulative log fidelity data points selected is 12 dB for the 10 dB/div scale and 2 dB for the 2 dB/div scale. These differences ensure that the uncertainty due to the marker amplitude resolution is less than one-fourth of the specification.

The spectrum analyzer provides the 10 MHz reference to the signal generator.

ManualsPlus.com

Figure 8-8 Scale Fidelity Test Setup

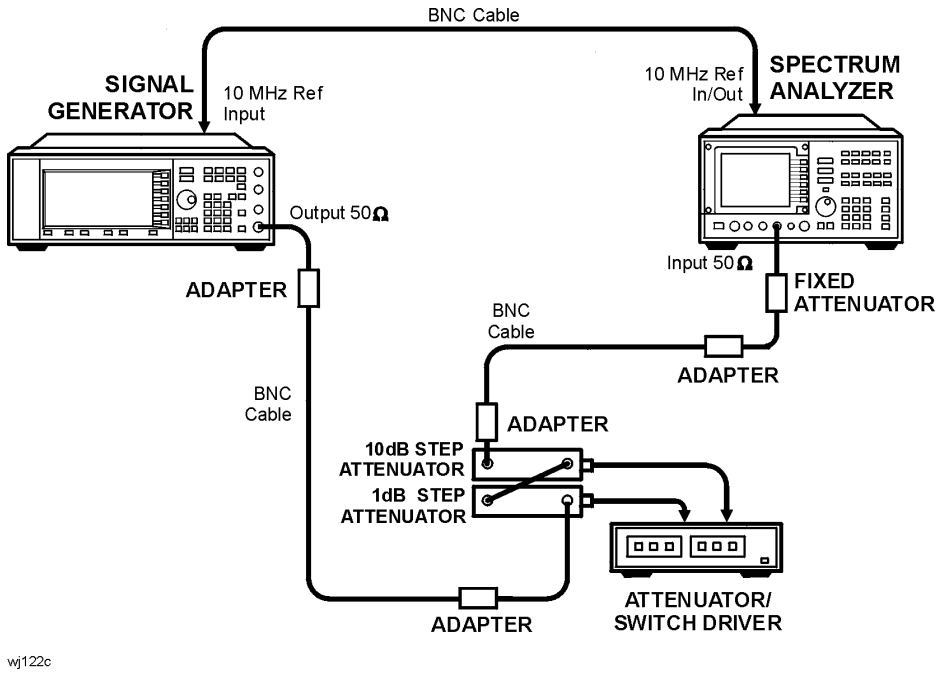

Equipment

Signal generator E4421B

10 dB coaxial fixed attenuator . . . . . 8491B, Option 010

Attenuator/Switch Driver 11713A

1 dB Precision Step Attenuator . . . . . 8494G, Option 001

10 dB Precision Step Attenuator . . . . . 8496G, Option 001

Attenuator Interconnector Kit 11716A

Adapter

Type N (m) to BNC (f) (*4 required*). 1250-1476

Type N (f) to 2.4 mm (f). 11903B

(*for 8564E/EC and 8565E/EC*)

Cable

BNC, 122 cm (48 in.) *(3 required)*. 10503A

ManualsPlus.com

Procedure

1. Connect the equipment as shown in Figure 8-8. The spectrum analyzer provides the frequency reference for the Agilent E4421B.
2. Set the Agilent E4421B controls as follows:

   Frequency . . . . . 50 MHz

   Amplitude . . . . . +10 dBm

   Amplitude increment . . . . . .0.04 dB

   RF Output . . . . . On

3. On the spectrum analyzer, press **PRESET**, **CAL**, **REALIGN LO & IF**. Wait for the adjustments to finish. Set the controls as follows:

   Center frequency . . . . . 50 MHz

   Span . . . . . 0 Hz

   Resolution BW . . . . . 300 Hz

   Video BW . . . . . 100 Hz

   Sweep time . . . . . .2 s

4. Set the step attenuators to 0 dB.
5. On the spectrum analyzer, press **MKR**.

10 dB/Div Log Scale, RES BW ≥ 300 Hz

6. On the Agilent E4421B, press **Amplitude** and use the increment ⇓ and ⇑ keys to adjust the amplitude until the spectrum analyzer marker reads exactly 0 dBm ±0.17 dB.
7. Enter the calibrated attenuation values as the actual attenuation in Table 8-18 using the appropriate step attenuator calibration data.

   For the 40 dB and 4 dB attenuator step, use the attenuator calibration data section 4 setting and data.

8. On the spectrum analyzer, press **SGL SWP, MKR, MKRNOISE ON**, and **MARKER DELTA**. Press **AMPLITUDE**, **MORE 1 OF 3, REF LVL OFFSET,** 22.8, **dB,** and **SGL SWP**. The reference level offset effectively removes the noise marker corrections for the envelope detector, log amplifiers, and noise bandwidth correction.
9. Increase the step attenuator setting by 6 dB to the next value listed in Table 8-18.

ManualsPlus.com

10. On the spectrum analyzer, press **SGL SWP** and wait for the completion of a new sweep. Subtract 0.02 dB from the ΔMKR amplitude reading and record the result as the actual ΔMKR reading in Table 8-18.

NOTE The noise marker subtracts 22.78 dB from the 32 data point average. The reference level offset can only correct for 22.8 dB of this difference due to its 0.1 dB resolution. Subtracting 0.02 dB from the ΔMKR reading corrects for the 0.02 dB residual error.

11. Repeat step 9 and step 10 for each step attenuator setting in Table 8-18.

12. Calculate the correct values for the corrected delta marker entries in Table 8-18 as follows:

    a. Calculate the attenuation error by subtracting the actual attenuation from the total step attenuator setting.

       Atten error = Total step attenuator setting – Actual attenuation

    b. Calculate the corrected delta marker by subtracting the attenuation error from the actual delta marker reading.

       Corrected Δ marker = Δ marker reading – Atten error

    c. Record this value as the corrected Δ marker value in Table 8-18

NOTE The log fidelity incremental error in the 10 dB/div scale is calculated only for readings from –12 dB to –90dB from the reference level.

ManualsPlus.com

13. Calculate the incremental error for a given dB from REF LVL as follows:

    a. Set current actual ΔMKR equal to the actual ΔMKR reading for the current total step attenuator setting.
    b. Set previous actual ΔMKR equal to the actual ΔMKR reading for the total step attenuator setting listed in parenthesis in the incremental error column for the current total step attenuator setting.
    c. Calculate the incremental error as follows:

       Incremental error (dB/dB) = (current ΔMKR – previous ΔMKR + 12 dB) / 12
       For example, given:

       Actual ΔMKR reading at –18 dB from REF LVL = –17.83 dB
       Actual ΔMKR reading at –24 dB from REF LVL = –24.17 dB
       Actual ΔMKR reading at –30 dB from REF LVL = –30.33 dB
       The incremental error for the 30 dB total step attenuator setting (–30.33 dB) is calculated as follows:

       Incremental error = (–30.33 – (–17.83) + 12) / 12
       = –0.50 / 12
       = –0.042 dB/dB

    d. Enter the result of the incremental error calculation in the **Incremental Error** column of Table 8-18

ManualsPlus.com

10 dB/Div Log Scale, RES BW ≤ 100 Hz

14. Set the spectrum analyzer controls as follows:

    Trigger . . . . . Continuous

    Reference level offset . . . . . .0 dB

    Markers. . . . . off

    Span . . . . . 100 Hz

    Resolution BW . . . . . 10 Hz

    Sweep time . . . . . .Automatic

15. Set the Agilent E4421B controls as follows:

    Amplitude . . . . . +10 dBm

    Amplitude increment . . . . . 0.04 dB

16. Set the step attenuators to 0 dB.

17. On the spectrum analyzer, press **PEAK SEARCH**.

18. On the Agilent E4421B, press **Amplitude** and use the increment ⇓ and ⇑ keys to adjust the amplitude until the spectrum analyzer marker reads exactly 0 dBm ±0.17 dB.

19. Enter the calibrated attenuation values as the actual attenuation in Table 8-19 using the appropriate step attenuator calibration data.

    For the 40 dB and 4 dB attenuator step, use the attenuator calibration data section 4 setting and data.

20. On the spectrum analyzer, press **SGL SWP**, **PEAK SEARCH**, and **MARKER DELTA**.

21. Increase the step attenuator setting by 6 dB to the next value listed in Table 8-19.

NOTE Increase the attenuator setting 4 dB for last two entries in Table 8-19

22. If the total step attenuator setting is ≥ 80 dB (40 dB, for example), press **SGL SWP** and wait until a new sweep is completed. Press **PEAK SEARCH** and record the ΔMKR amplitude as the actual ΔMKR reading in Table 8-19.

23. If the total step attenuator is ≥80 dB (+84 dB, for example), press **TRIG**, **CONT, BW**, **VID AVG ON**, **1**, **0**, **HZ**, and wait for `VAVG 10` to be displayed above the graticule. Press **SGL SWP** and wait until a new sweep is completed. Press **PEAK SEARCH** and record the ΔMKR as the actual ΔMKR reading in Table 8-19.

ManualsPlus.com

24. Repeat step 21, step 22, and step 23 for each (nominal) step attenuator setting in Table 8-19.

25. Calculate the correct values for the corrected delta marker entries in Table 8-19 as follows:

    a. Calculate the attenuation error by subtract the actual attenuation from the total step attenuator setting.
       Error = Total step attenuator setting – Actual attenuation

    b. Calculate the corrected delta marker by subtracting the attenuation error from the actual delta marker reading.

       Corrected Δ marker = Δ marker reading – Atten error

    c. Record this value as the corrected Δ marker value in Table 8-19

26. Calculate the incremental error for a given dB from REF LVL as follows:

    a. Set current actual ΔMKR equal to the actual ΔMKR reading for the current total step attenuator setting.

    b. Set previous ΔMKR equal to the ΔMKR reading for the total step attenuator setting listed in parenthesis as the incremental error column for the current total step attenuator setting.

    c. Calculate the incremental error as follows:

       Incremental error (dB/dB) = (current ΔMKR – previous ΔMKR + 12 dB) / 6

       For example, given:

       Actual ΔMKR reading at –18 dB from REF LVL = –17.83 dB
       Actual ΔMKR reading at –24 dB from REF LVL = –24.17 dB
       Actual ΔMKR reading at –30 dB from REF LVL = –30.33 dB
       The incremental error for the –30 dB from REF LVL setting is calculated as follows:

       Incremental error = (–30.33 – (–17.83) + 12) / 6
       = –0.50 / 6
       = –0.083 dB/2 dB

    d. Place the result of the incremental error calculation in the **Incremental Error** column of Table 8-19.

ManualsPlus.com

2 dB/Div Log Scale

27. Set the spectrum analyzer controls as follows:

    Trigger . . . . . Continuous

    Markers. . . . . off

    Log dB/division . . . . . .2 dB

    Span . . . . . 0 Hz

    Resolution BW . . . . . 1 kHz

    Video BW . . . . . 300 Hz

    Sweep time . . . . . 1 s

    Video average . . . . . off

28. Set the Agilent E4421B controls as follows:

    Amplitude . . . . . +10 dBm

    Amplitude increment . . . . . 0.02 dB

29. Set the step attenuators to 0 dB.

30. On the spectrum analyzer, press **MKR**.

31. On the Agilent E4421B, press **Amplitude** and use the increment ⇓ and ⇑ keys to adjust the amplitude until the spectrum analyzer marker reads exactly 0 dBm ±0.03 dB.

32. Enter the calibrated attenuation values as the actual attenuation in Table 8-20 using the appropriate step attenuator calibration data.

    For the 4 dB attenuator step, use the attenuator calibration data section 4 setting and data.

33. On the spectrum analyzer, press **SGL SWP, MKR,** and **MARKER DELTA**.

34. Increase the step attenuator setting by 2 dB to the next value listed in Table 8-20.

35. On the spectrum analyzer, press **SGL SWP** and wait for the completion of a new sweep. Record the ΔMKR amplitude reading as the actual ΔMKR reading in Table 8-20.

36. Repeat step 34 and step 35 for each step attenuator setting in Table 8-20.

ManualsPlus.com

37. Calculate the correct values for the corrected delta marker entries in Table 8-20 as follows:

    a. Calculate the attenuation error by subtracting the actual attenuation from the total step attenuator setting.

       Atten error = Total step attenuator setting – Actual attenuation

    b. Calculate the corrected delta marker by subtracting the attenuation error from the actual delta marker reading.

       Corrected Δ marker = Δ marker reading – Atten error

    c. Record this value as the corrected Δ marker value in Table 8-20

38. From each ΔMKR reading in Table 8-20, subtract the previous ΔMKR reading. Add 2 dB to this number. Divide this result by 2 dB and record the result as the incremental error in Table 8-20.

    Incremental error = (current ΔMKR – previous ΔMKR + 2) / 2

ManualsPlus.com

Linear Scale

39. Set the spectrum analyzer controls as follows:

    Trigger . . . . . Continuous

    Amplitude scale . . . . . linear

    Amplitude units . . . . . dBm

40. Set the Agilent E4421B controls as follows:

    Amplitude . . . . . +10 dBm

    Amplitude increment . . . . . 0.02 dB

41. Set the step attenuators to 0 dB.

42. On the spectrum analyzer, press **MKR,** and **MARKER NORMAL**.

43. On the Agilent E4421B, press **Amplitude** and use the increment ⇓ and ⇑ keys to adjust the amplitude until the spectrum analyzer marker reads exactly 0 dBm ± 0.02 dB.

44. Enter the calibrated attenuation values as the actual attenuation in Table 8-21 using the appropriate step attenuator calibration data.

    For the 4 dB attenuator step, use the attenuator calibration data section 4 setting and data.

45. On the spectrum analyzer, press **SGL SWP**, **MKR,** and **MARKER DELTA**.

46. Increase the attenuation setting of the step attenuators 2 dB or to the next value listed in Table 8-21.

47. On the spectrum analyzer, press **SGL SWP** and wait for the completion of a new sweep. Record the ΔMKR amplitude as the actual ΔMKR amplitude reading in Table 8-21.

48. Repeat step 46 and step 47 for each step attenuator setting in Table 8-21.

49. Calculate the correct values for the corrected delta marker entries in Table 8-21 as follows:

    a. Calculate the attenuation error by subtracting the actual attenuation from the total step attenuator setting.

       Atten error = Total step attenuator setting – Actual attenuation

    b. Calculate the corrected delta marker by subtracting the attenuation error from the actual delta marker reading.

       Corrected Δ marker = Δ marker reading – Atten error

    c. Record this value as the corrected Δ marker value in Table 8-21

ManualsPlus.com

Table 8-18 10 dB/Div Log Scale Fidelity (RES BW ≥300 Hz)

Step Attenuator Setting			Actual Attenuation	Δ MKR Reading		Incremental Error	Measurement Uncertainty
1 dB Step (dB)	10 dB Step (dB)	Total (dB)	(dB)	Actual (dB)	Corrected (dB)	(dB)	(dB)
0	0	0	0 (Ref.)	0 (Ref.)	0 (Ref.)	0 (Ref.)	0 (Ref.)
6	0	6				N/A	±0.03
2	10	12				(0)	±0.04
8	10	18				(6)	±0.04
4[a]	20	24				(12)	±0.04
0	30	30				(18)	±0.04
6	30	36				(24)	±0.04
2	40[a]	42				(30)	±0.04
8	40[a]	48				(36)	±0.04
4	50	54				(42)	±0.04
0	60	60				(48)	±0.04
6	60	66				(54)	±0.04
2	70	72				(60)	±0.05
8	70	78				(66)	±0.05
4[a]	80	84				(72)	±0.05
0	90	90				(78)	±0.11

a. Use the attenuator calibration data section 4 setting and data.

ManualsPlus.com

Table 8-19 10 dB/Div Log Scale Fidelity (RES BW ≤100 Hz)

Step Attenuator Setting			Actual Attenuation	Δ MKR Reading		Incremental Error	Measurement Uncertainty
1 dB Step (dB)	10 dB Step (dB)	Total (dB)	(dB)	Actual (dB)	Corrected (dB)	(dB)	(dB)
0	0	0	0 (Ref.)	0 (Ref.)	0 (Ref.)	0 (Ref.)	0 (Ref.)
6	0	6				N/A	±0.03
2	10	12				(0)	±0.04
8	10	18				(6)	±0.04
4[a]	20	24				(12)	±0.04
0	30	30				(18)	±0.04
6	30	36				(24)	±0.04
2	40[a]	42				(30)	±0.04
8	40[a]	48				(36)	±0.04
4	50	54				(42)	±0.04
0	60	60				(48)	±0.04
6	60	66				(54)	±0.04
2	70	72				(60)	±0.05
8	70	78				(66)	±0.05
4[a]	80	84				(72)	±0.05
0	90	90				(78)	±0.05
4[a]	90	94				N/A	±0.05
8	90	98				N/A	±0.05

a. Use the attenuator calibration data section 4 setting and data.

ManualsPlus.com

Table 8-20 2 dB/Div Log Scale Fidelity

Step Attenuator Setting			Actual Attenuation	Δ MKR Reading		Incremental Error	Measurement Uncertainty
1 dB Step (dB)	10 dB Step (dB)	Total (dB)	(dB)	Actual (dB)	Corrected (dB)	(dB)	(dB)
0	0	0	0 (Ref.)	0 (Ref.)	0 (Ref.)	0 (Ref.)	0 (Ref.)
2	0	2				N/A	±0.03
4[a]	0	4					±0.03
6	0	6					±0.03
8	0	8					±0.03
0	10	10					±0.03
2	10	12					±0.03
4[a]	10	14					±0.03
6	10	16					±0.03
8	10	18					±0.03

a. Use the attenuator calibration data section 4 setting and data.

Table 8-21 Linear Scale Fidelity

Step Attenuator Setting			Actual Attenuation	Δ MKR Reading		Measurement Uncertainty
1 dB Step (dB)	10 dB Step (dB)	Total (dB)	(dB)	Actual (dB)	Corrected (dB)	(dB)
0	0	0	0 (Ref.)	0 (Ref.)	0 (Ref.)	0 (Ref.)
2	0	2				±0.03
4[a]	0	4				±0.03
6	0	6				±0.03
8	0	8				±0.03
0	10	10				±0.03
2	10	12				±0.04
4[a]	10	14				±0.04
6	10	16				±0.04
8	10	18				±0.04

a. Use the attenuator calibration data section 4 setting and data.

ManualsPlus.com

33a. Second Harmonic Distortion: 8560E/EC

Instrument Under Test

8560E/EC

Related Specification

Second Harmonic Distortion

Related Adjustment

There is no related adjustment procedure for this performance test.

Description

A synthesized sweep generator and low-pass filter provide the signal for measuring second harmonic distortion. The low-pass filter eliminates any harmonic distortion originating at the signal source. The synthesized sweeper is phase-locked to the spectrum analyzer 10 MHz reference. This test is performed at an input frequency of 40 MHz.

Figure 8-9 Second Harmonic Distortion Test Setup

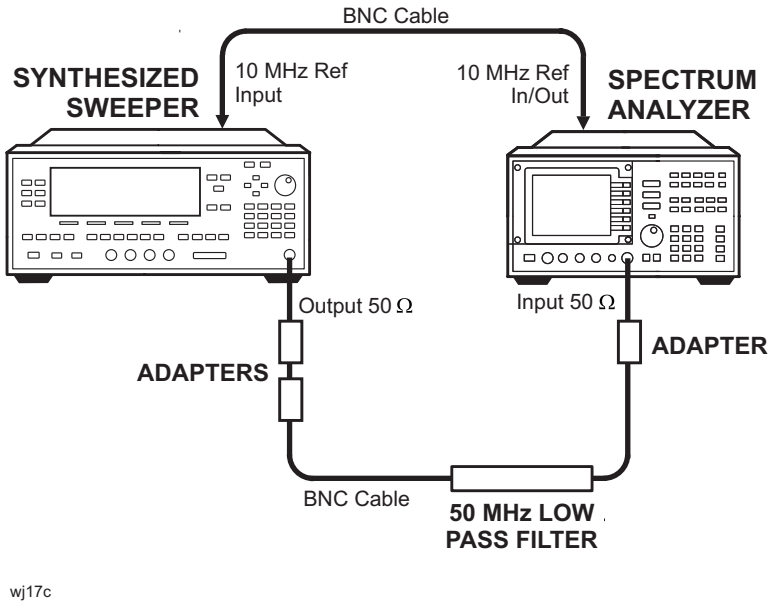

Equipment

Synthesized sweep generator 83640B

50 MHz low-pass filter 0955-0306

ManualsPlus.com

Adapter

Type N (m) to BNC (f)1250-1476

SMA (m) to BNC (f) 1250-1200

APC-3.5 (f) to 2.4 mm (f) 11901B

Cable

BNC, 122 cm (48 in) 10503A

Procedure

1. Connect the equipment as shown in Figure 8-9. The spectrum analyzer provides the frequency reference for the synthesized sweeper.
2. Set the 83640B controls as follows:

   Frequency . . . . . 40 MHz
   Amplitude . . . . . –20 dBm
   Amplitude increment . . . . . 0.04 dB
   RF Output . . . . . On

3. On the spectrum analyzer, press **PRESET**. Set the controls as follows:

   Center frequency . . . . . 40 MHz
   Span . . . . . 1 kHz
   Reference level . . . . . –30 dBm

4. On the spectrum analyzer, press **PEAK SEARCH**.
5. On the 83640B, adjust the output power level for a spectrum analyzer marker amplitude reading of –30 dBm ±0.17 dB.
6. On the spectrum analyzer, press **SGL SWP**. Wait for the completion of the sweep, then press **PEAK SEARCH**, **MKR**→, and **MARKER** → **CF STEP**.
7. Press **MKR, MARKER DELTA**, **FREQUENCY,** ⇑, and **SGL SWP**.
8. After the spectrum analyzer completes a new sweep, press **PEAK SEARCH**. Record the Δ MKR amplitude reading as the Second Harmonic Distortion.

Second harmonic distortion:_____ dBc

(Measurement uncertainty: +1.87/–2.28 dB)

ManualsPlus.com

34a. Second Harmonic Distortion: Agilent 8561E/EC

Instrument Under Test

8561E/EC

Related Specification

Second Harmonic Distortion

Related Adjustment

There is no related adjustment procedure for this performance test.

Description

A synthesized sweep generator and low-pass filter provide the signal for measuring second harmonic distortion. The low-pass filter eliminates any harmonic distortion originating at the signal source. The spectrum analyzer frequency response is calibrated out for the >1.45 GHz test. The synthesized sweeper is phase-locked to the spectrum analyzer 10 MHz reference.

Figure 8-10 Second Harmonic Distortion Test Setup, Band 0

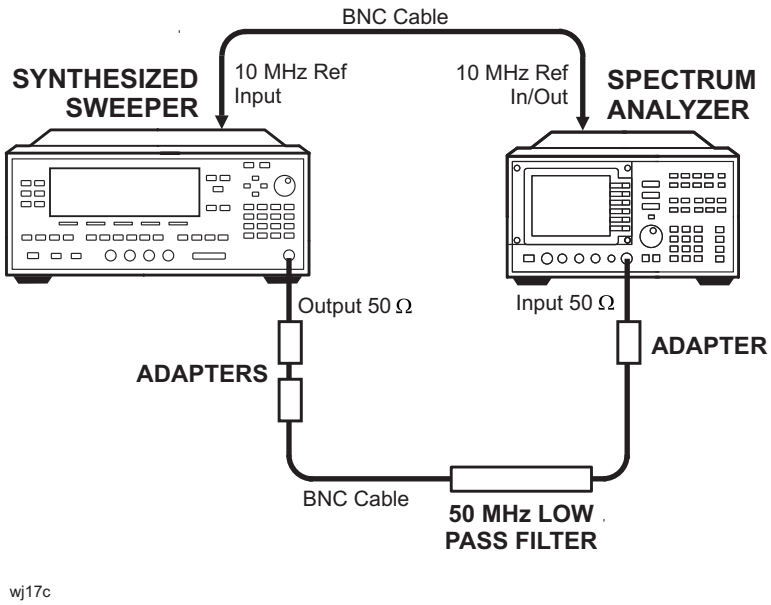

ManualsPlus.com

Figure 8-11 **Second Harmonic Distortion Test Setup, Band 1**

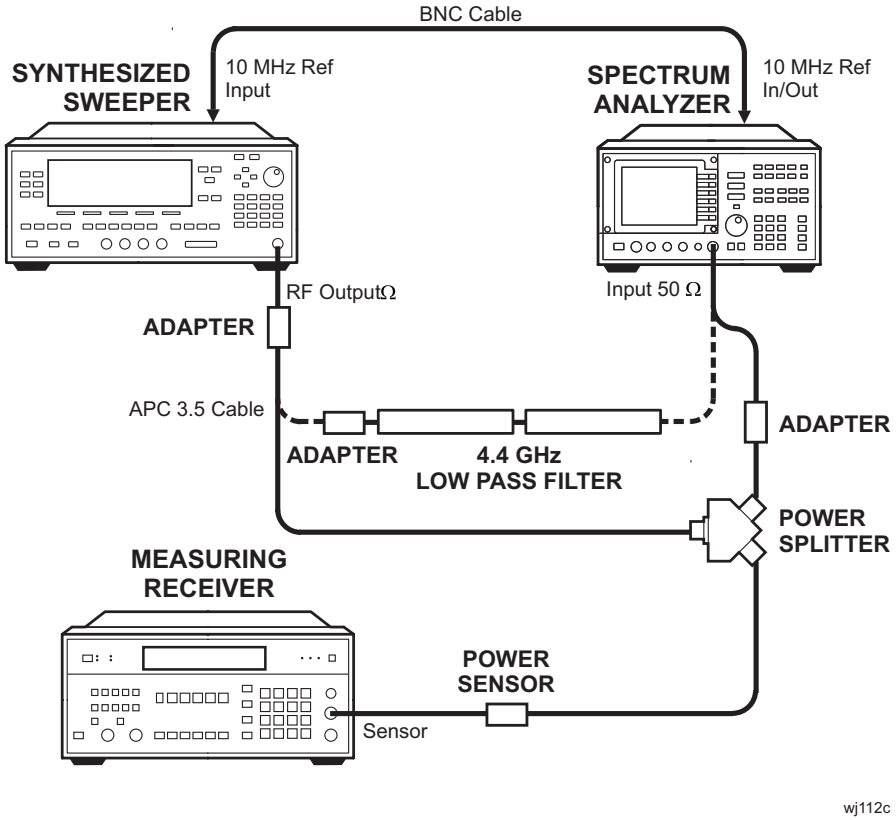

Equipment

Synthesized sweeper 83640B

Measuring receiver 8902A

Power sensor. 8485A

50 MHz low-pass filter 0955-0306

4.4 GHz low-pass filter *(2 required)* 11689A

Power splitter 11667B

Adapters

Type N (m) to BNC (f) 1250-1476

APC-3.5 (m) to Type N (m) 1250-1743

APC-3.5 (f) to Type N (m) 1250-1744

APC-3.5 (m) to BNC (f) 1250-1200

APC-3.5 (f) to 2.4 mm (f) 11901B

ManualsPlus.com

Cables

BNC, 122 cm (48 in.) *(2 required)* Agilent 10503A

APC 3.5, 91 cm (36 in.) 8120-4921

Procedure

Second Harmonic Distortion, <1.45 GHz

1. Connect the equipment as shown in Figure 8-10, using the 50 MHz low-pass filter. The spectrum analyzer provides the frequency reference for the synthesized sweeper.
2. Set the Agilent 83640B controls as follows:

   Frequency . . . . . 40 MHz

   Amplitude . . . . . –20 dBm

   Amplitude increment . . . . . 0.04 dB

   RF Output. . . . . On
3. On the spectrum analyzer, press **PRESET**. Set the controls as follows:

   Center frequency . . . . . 40 MHz

   Span . . . . . 1 kHz

   Reference level . . . . . –30 dBm
4. On the spectrum analyzer, press **PEAK SEARCH**.
5. On the Agilent 83640B, adjust the output power level for a spectrum analyzer marker amplitude reading of –30 dBm ±0.17 dB.
6. On the spectrum analyzer, press **SGL SWP**. Wait for the completion of the sweep, then press **PEAK SEARCH**, **MKR**→, and **MARKER** → **CF STEP**.
7. Press **MKR, MARKER DELTA, FREQUENCY,** ⇑, and **SGL SWP**.
8. After the spectrum analyzer completes a new sweep, press **PEAK SEARCH**. Record the Δ MKR amplitude reading as the second harmonic distortion (<1.45 GHz).

   Second harmonic distortion (<1.45 GHz):_____ dBc

ManualsPlus.com

Second Harmonic Distortion, >1.45 GHz

9. Zero and calibrate the Agilent 8485A in LOG mode (readout in dBm). Enter the power sensor 3 GHz calibration factor into the Agilent 8902A.
10. Connect the equipment as shown in Figure 8-11, without the filters in place.
11. On the spectrum analyzer, set the controls as follows:

    Center frequency . . . . . 2.95 GHz

    Center frequency step . . . . . 2.95 GHz

    Reference level. . . . . 0 dBm

    Span . . . . . 10 kHz

    Resolution BW . . . . . 300 Hz
12. On the Agilent 83640B, set the controls as follows:

    CW frequency . . . . . 2.95 GHz

    Power level . . . . . –10 dBm
13. On the spectrum analyzer press **TRIG**, **SWEEP CONT**, **MKR**, **MARKERS OFF**, and **PEAK SEARCH**.
14. Press **AMPLITUDE**, **MORE 1 OF 3**, **MORE 2 OF 3**, and **PRESEL AUTO PK**.

NOTE Wait for the PEAKING message to disappear before continuing to the next step.

15. On the Agilent 83640B, adjust the power level for a spectrum analyzer MKR reading of –5 dBm.
16. On the Agilent 8902A, press **RATIO**. Enter the power sensor 6 GHz calibration factor into the Agilent 8902A.
17. Set the Agilent 83640B frequency to 5.9 GHz.
18. On the spectrum analyzer press **FREQUENCY**, ⇑, and **PEAK SEARCH**.
19. Press **AMPLITUDE**, **MORE 1 OF 3**, **MORE 2 OF 3**, and **PRESEL AUTO PK**.

NOTE Wait for the PEAKING message to disappear before continuing to the next step.

ManualsPlus.com

20. On the Agilent 83640B, adjust the power level for a spectrum analyzer MKR reading of –5 dBm.

21. Record the Agilent 8902A reading here, as the frequency response error:

Frequency response error:_____ dB

22. Connect the equipment as shown in Figure 8-11, with the filter in place.

23. On the Agilent 83640B, set the controls as follows:

CW frequency . . . . . .2.95 GHz

Power level . . . . . –5 dBm

24. On the spectrum analyzer press **MKR**, **MARKERS OFF**, **FREQUENCY**, ⇓, and **PEAK SEARCH**.

25. On the Agilent 83640B, adjust the power level for a spectrum analyzer marker amplitude reading of 0 dBm.

26. On the spectrum analyzer press **SGL SWP**, **SGL SWP**, **PEAK SEARCH**, **MARKER DELTA**, **FREQUENCY**, and ⇑.

27. Press **AMPLITUDE**, 30, –**dBm**, and **SGL SWP**.

NOTE In order to obtain proper readings, wait for the completion of a new sweep.

28. Press **PEAK SEARCH**. Record the Δ MKR amplitude reading here:

Δ MKR amplitude reading: _____ dBc

29. Algebraically add the frequency response error recorded in step 21 to the Δ MKR amplitude reading in step 28. Record the result here, as the second harmonic distortion (>1.45 GHz).

Second harmonic
distortion (>1.45 GHz): _____ dBc

ManualsPlus.com

36a. Frequency Response: 8560E/EC

Instrument Under Test

8560E/EC

Related Specification

Relative Frequency Response
Absolute Frequency Response

Related Adjustment

Frequency Response Adjustment
LO Distribution Amplifier Adjustment

Description

For frequencies of 250 kHz and greater the output of a source is fed through a power splitter. One output of the power splitter is fed to a power sensor and then to a measuring receiver. The other output of the power splitter is fed to the spectrum analyzer. The source power level is adjusted at 300 MHz to place the displayed signal at the spectrum analyzer center horizontal graticule line. The measuring receiver, used as a power meter, is placed in ratio mode. At each new source frequency and spectrum analyzer center frequency, the source power level is adjusted to place the signal at the center horizontal graticule line. The measuring receiver displays the inverse of the frequency response relative to the calibrator.

For frequencies below 250 kHz the output of a function generator is fed through a power splitter to an ac digital volt meter (ACDVM) and to the spectrum analyzer. At each function generator frequency setting and spectrum analyzer center frequency setting, the function generator power level is adjusted to place the displayed signal at the spectrum analyzer center horizontal graticule line. The ACDVM is used to measure the function generator output signal level in dBm.

ManualsPlus.com

Figure 8-12 Frequency Response Test Setup, 250 kHz to 2.9 GHz

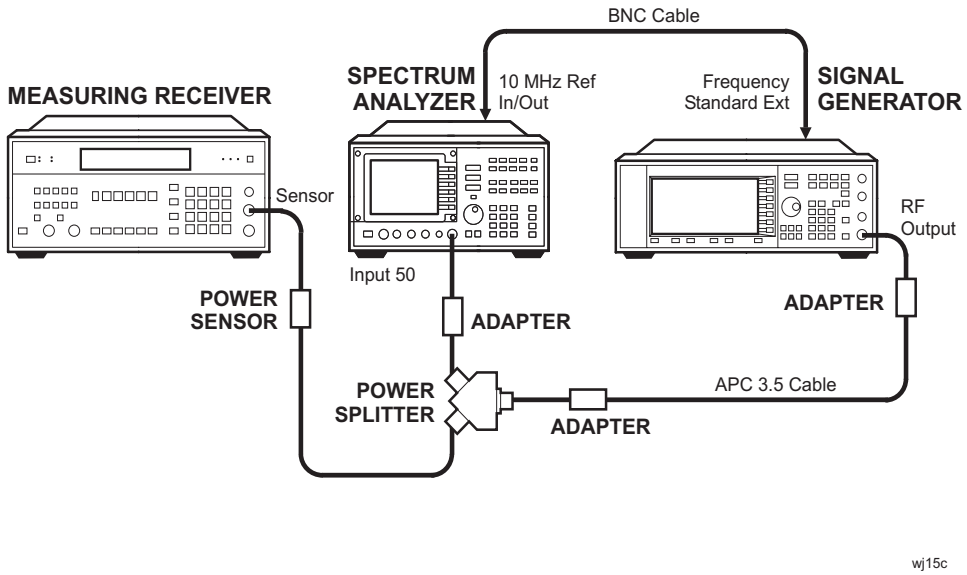

Figure 8-13 Frequency Response Test Setup, ≤250 kHz

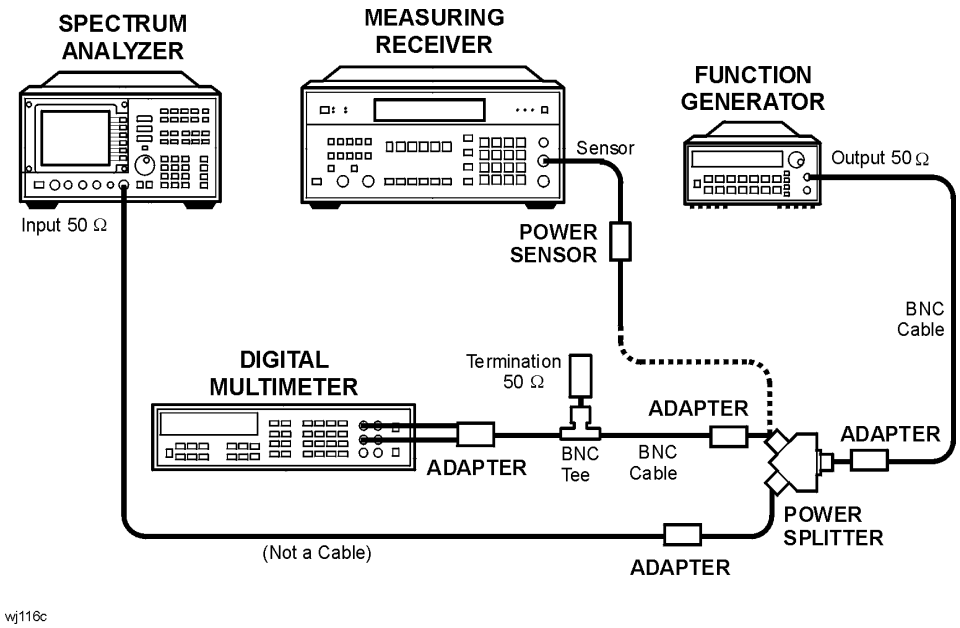

Equipment

Measuring receiver 8902A

Function Generator. . . . . 3324A or 33127A

Signal generator E4421B

AC Digital Voltmeter. 3458A

ManualsPlus.com

Power sensor 8482A

Power splitter 11667A

Coaxial 50 Ω termination 908A

Adapters

Type N (m) to type N (m) 1250-1475

Type N (m) to BNC (f) *(2 required)* 1250-1476

Type N (m) to APC 3.5 (f) *(2 required)* 1250-1744

BNC (f) to Dual Banana Plug 1251-2816

BNC Tee 1250-0781

Cables

BNC, 122 cm (48 in) *(2 required)* 10503A

APC-3.5, 91 cm (36 in) 8120-4921

DVM test leads 34118A

Procedure

1. Zero and calibrate the 8902A and the 8482A in log mode, as described in the 8902A Operation Manual. Enter the power sensor 300 MHz calibration factor into the 8902A.
2. Connect the equipment as shown in Figure 8-12.
3. On the E4421B, set the controls as follows:

   CW frequency . . . . . 300 MHz

   Frequency increment . . . . . 100 MHz

   Amplitude . . . . . –4 dBm
4. On the spectrum analyzer, press **PRESET**. Set the controls as follows:

   Center frequency . . . . . 300 MHz

   Span . . . . . 0 Hz

   Reference level . . . . . –5 dBm

   dB/division . . . . . 1 dB

   Resolution BW . . . . . 30 kHz
5. On the spectrum analyzer, press **MKR**.

ManualsPlus.com

6. On the Agilent E4421B, adjust the power level for a MKR amplitude of –10 dBm ±0.05 dB.
7. Press **RATIO** on the Agilent 8902A.

DC Coupled Frequency Response (≥250 kHz)

8. On the spectrum analyzer, press **AMPLITUDE, MORE 1 OF 3**, and **COUPLING DC**.
9. Set the Agilent E4421B frequency to 250 kHz.
10. On the spectrum analyzer, press **FREQUENCY**, **CENTER FREQ**, 250, and **kHz**.
11. On the Agilent E4421B, adjust the power level for a spectrum analyzer MKR amplitude reading of –10 dBm ±0.05 dB.
12. Enter the 0.3 MHz power sensor calibration factor, indicated in Table 8-22, into the Agilent 8902A.
13. Record the negative of the power ratio displayed on the Agilent 8902A as the Agilent 8902A reading in Table 8-22. Record the power ratio here exactly as it is displayed on the Agilent 8902A:

    Agilent 8902A reading at 250 kHz:_____ dB

14. Set the Agilent E4421B to 1.0 MHz.
15. On the spectrum analyzer, press **FREQUENCY, CENTER FREQ**, 1.0, and **MHz**.
16. On the Agilent E4421B, adjust the power level for a spectrum analyzer MKR amplitude reading of –10 dBm ±0.05 dB.
17. Enter the 1 MHz power sensor calibration factor, indicated in Table 8-22, into the Agilent 8902A.
18. Record the negative of the power ratio displayed on the Agilent 8902A, as the Agilent 8902A reading in Table 8-22.
19. On the Agilent E4421B, set the frequency to the next value listed in Table 8-22.
20. On the spectrum analyzer, set the center frequency to the next value listed in Table 8-22.
21. On the Agilent E4421B, adjust the power level for a spectrum analyzer MKR amplitude reading of –10 dBm ±0.05 dB.
22. Enter the power sensor calibration factor, indicated in Table 8-22, into the Agilent 8902A.

ManualsPlus.com

23. Record the negative of the power ratio displayed on the Agilent 8902A, as the Agilent 8902A reading in Table 8-22.

24. To step through the remaining frequencies listed in Table 8-22, repeat step 19 through step 23.

AC Coupled Frequency Response (≥250 kHz)

25. On the spectrum analyzer, press **AMPLITUDE, MORE 1 OF 3**, and **COUPLING AC**.
26. Set the Agilent E4421B to 250 kHz.
27. On the spectrum analyzer, press **FREQUENCY, CENTER FREQ**, 250, and **kHz**.
28. On the Agilent E4421B, adjust the power level for a spectrum analyzer MKR amplitude reading of –10 dBm ±0.05 dB.
29. Enter the 0.3 MHz power sensor calibration factor, indicated in Table 8-23, into the Agilent 8902A.
30. Record the negative of the power ratio displayed on the Agilent 8902A as the Agilent 8902A reading in Table 8-23. Record the power ratio here exactly as it is displayed on the Agilent 8902A:

    Agilent 8902A reading at 250 kHz: _____ dB

31. Set the Agilent E4421B to 1.0 MHz.
32. On the spectrum analyzer, press **FREQUENCY**, **CENTER FREQ**, 1.0, and **MHz**.
33. On the Agilent 83640B, adjust the power level for a spectrum analyzer MKR amplitude reading of –10 dBm ±0.05 dB.
34. Enter the 0.1 MHz power sensor calibration factor, indicated in Table 8-23, into the Agilent 8902A.
35. Record the negative of the power ratio displayed on the Agilent 8902A as the Agilent 8902A reading in Table 8-23.
36. On the Agilent E4421B, set the frequency to the next value listed in Table 8-23.
37. On the spectrum analyzer, set the center frequency to the next value listed in Table 8-23.
38. On the Agilent E4421B, adjust the power level for a spectrum analyzer MKR amplitude reading of –10 dBm ±0.05 dB.

ManualsPlus.com

39. Enter the power sensor calibration factor, indicated in Table 8-23, into the Agilent 8902A.

40. Record the negative of the power ratio displayed on the Agilent 8902A, as the Agilent 8902A reading in Table 8-23.

41. To step through the remaining frequencies listed in Table 8-23, repeat step 36 through step 40.

DC Coupled Frequency Response (≤250 kHz)

42. On the spectrum analyzer, press **AMPLITUDE**, **MORE 1 OF 3**, and **COUPLING DC**. Set the controls as follows:

    Center frequency . . . . . 250 kHz

    Span . . . . . 100 Hz

    Resolution BW . . . . . 10 Hz

    Marker . . . . . off

    Video BW . . . . . 1 Hz

43. On the Agilent 3324A, set the controls as follows:

    Frequency . . . . . 250 kHz

    Amplitude . . . . . –4 dBm

    Output . . . . . 50 Ω

    Amplitude increment . . . . . 0.01 dB

44. On the Agilent 3458A, set the controls as follows:

    Function . . . . . Sync AC Volts

    Math . . . . . dBm

    RES Register . . . . . 50 Ω

    Front/Rear Terminal . . . . . Front

    Resolution . . . . . 7.5 digits

45. Connect the equipment as shown in Figure 8-13 with the Agilent 8482A power sensor and Agilent 8902A connected to the power splitter.

46. Enter the power sensor calibration factor for 0.1 MHz into the Agilent 8902A.

47. Zero and calibrate the sensor.

ManualsPlus.com

48. Adjust the Agilent 3324A amplitude until the Agilent 8902A display reads the same value as recorded in step 13.

49. Disconnect the Agilent 8482A and power sensor from the power splitter connect the Agilent 3458A.

50. Record the Agilent 3458A reading here and in Table 8-24:

Agilent 3458A reading at 250 kHz: _____ dBm

51. On the spectrum analyzer, press **PEAK SEARCH** and **MARKER DELTA**.

52. Set the spectrum analyzer CENTER FREQ and the Agilent 3324A frequency to the next frequency listed in Table 8-24.

53. Press **PEAK SEARCH** on the spectrum analyzer.

54. Adjust the Agilent 3324A amplitude for a Δ MKR amplitude reading of 0.00 dBm ±0.05 dB.

55. Record the Agilent 3324A amplitude readings in Table 8-24 as the ACDMV amplitude.

56. To step though the remaining frequencies listed in Table 8-24, repeat step 52 through step 55.

57. For each of the frequencies listed in Table 8-24, subtract the ACDVM amplitude reading from the ACDVM reading at 250 kHz recorded in step 50. Record the results as the response relative to 250 kHz in Table 8-24.

58. Add to each of the response relative to 250 kHz entries in Table 8-24, the Agilent 8902A reading for 250 kHz listed in Table 8-22. Record the results as the response relative to 300 MHz in Table 8-24.

ManualsPlus.com

Test Results

59. Record dc coupled frequency response results below:

a. Enter the most positive number from Table 8-24, column 4. _____ dB

b. Enter the most positive number from Table 8-22, column 2. _____ dB

c. Of (a) and (b), enter whichever number is *more* positive. _____ dB

d. Enter the most negative number from Table 8-24, column 4. _____ dB

e. Enter the most negative number from Table 8-22, column 2. _____ dB

f. Of (d) and (e), enter whichever number is *more* negative. _____ dB

g. Subtract (f) from (c). _____ dB

60. Record ac coupled frequency response results below:

a. Enter the most positive number from Table 8-23, column 2. _____ dB

b. Enter the most negative number from Table 8-23, column 2. _____ dB

g. Subtract (b) from (a). _____ dB

61. This step applies only to spectrum analyzers with serial number prefixes 3632A and later. Record the dc coupled frequency response results over the 100 MHz to 2.9 GHz range:

a. Enter the most positive number from Table 8-22, column 2, for center frequencies between 100 MHz and 2.9 GHz. _____ dB

b. Enter the most negative number from Table 8-22, column 2, for center frequencies between 100 MHz and 2.9 GHz. _____ dB

c. Subtract (b) from (a). _____ dB

ManualsPlus.com

Table 8-22 DC Coupled Frequency Response (≥250 kHz)

Source Frequency (MHz)	Agilent 8902A Reading (dB)	Pwr Sensor Cal Factor Frequency (MHz)	Measurement Uncertainty (dB)
0.250		0.3	+0.32/–0.34
1		1	+0.32/–0.34
10		10	+0.32/–0.34
20		10	+0.32/–0.34
50		30	+0.32/–0.34
100		100	+0.32/–0.34
200		300	+0.32/–0.34
300		300	+0.32/–0.34
400		300	+0.32/–0.34
500		300	+0.32/–0.34
600		1000	+0.32/–0.34
700		1000	+0.32/–0.34
800		1000	+0.32/–0.34
900		1000	+0.32/–0.34
1000		1000	+0.32/–0.34
1100		1000	+0.32/–0.34
1200		1000	+0.32/–0.34
1300		1000	+0.32/–0.34
1400		1000	+0.32/–0.34
1500		1000	+0.32/–0.34
1600		2000	+0.32/–0.34
1700		2000	+0.32/–0.34
1800		2000	+0.32/–0.34
1900		2000	+0.32/–0.34
2000		2000	+0.32/–0.34
2100		2000	+0.32/–0.34
2200		2000	+0.32/–0.34
2300		2000	+0.32/–0.34
2400		2000	+0.32/–0.34
2500		2000	+0.32/–0.34
2600		3000	+0.32/–0.34
2700		3000	+0.32/–0.34
2800		3000	+0.32/–0.34
2900		3000	+0.32/–0.34

ManualsPlus.com

Table 8-23 AC Coupled Frequency Response (≥250 kHz)

Column 1 Frequency (MHz)	Column 2 Agilent 8902A Reading (dB)	Column 3 Cal Factor Frequency (MHz)	Column 4 Measurement Uncertainty (dB)
0.250		0.3	+0.32/–0.34
1		1	+0.32/–0.34
10		10	+0.32/–0.34
20		10	+0.32/–0.34
50		30	+0.32/–0.34
100		100	+0.32/–0.34
200		300	+0.32/–0.34
300		300	+0.32/–0.34
400		300	+0.32/–0.34
500		300	+0.32/–0.34
600		1000	+0.32/–0.34
700		1000	+0.32/–0.34
800		1000	+0.32/–0.34
900		1000	+0.32/–0.34
1000		1000	+0.32/–0.34
1100		1000	+0.32/–0.34
1200		1000	+0.32/–0.34
1300		1000	+0.32/–0.34
1400		1000	+0.32/–0.34
1500		1000	+0.32/–0.34
1600		2000	+0.32/–0.34
1700		2000	+0.32/–0.34
1800		2000	+0.32/–0.34
1900		2000	+0.32/–0.34
2000		2000	+0.32/–0.34
2100		2000	+0.32/–0.34
2200		2000	+0.32/–0.34
2300		2000	+0.32/–0.34
2400		2000	+0.32/–0.34
2500		2000	+0.32/–0.34
2600		3000	+0.32/–0.34
2700		3000	+0.32/–0.34
2800		3000	+0.32/–0.34

ManualsPlus.com

Table 8-23 AC Coupled Frequency Response (≥250 kHz) (Continued)

Column 1 Frequency (MHz)	Column 2 Agilent 8902A Reading (dB)	Column 3 Cal Factor Frequency (MHz)	Column 4 Measurement Uncertainty (dB)
2900		3000	+0.32/–0.34

ManualsPlus.com

Table 8-24 DC Coupled Frequency Response (<250 kHz)

Function Generator Frequency	ACDVM Amplitude (dBm)	Response Relative to 250 kHz	Response Relative to 300 MHz	Measurement Uncertainty (dB)
250 kHz		0 (Ref)		+0.27/–0.28
100 kHz				±0.23
10 kHz				±0.23
1 kHz				±0.23
500 Hz				±0.23
200 Hz				±0.23

ManualsPlus.com

37a. Frequency Response: 8561E/EC

Instrument Under Test

8561E/EC

Related Specification

Relative Frequency Response
Absolute Frequency Response
Band Switching Uncertainty

Related Adjustment

Frequency Response Adjustment
LO Distribution Amplifier Adjustment

Description

For frequencies of 250 kHz and greater the output of a source is fed through a power splitter. One output of the power splitter is fed to a power sensor and then to a measuring receiver. The other output of the power splitter is fed to the spectrum analyzer. The source power level is adjusted at 300 MHz to place the displayed signal at the spectrum analyzer center horizontal graticule line. The measuring receiver, used as a power meter, is placed in ratio mode. At each new source frequency and spectrum analyzer center frequency, the source power level is adjusted to place the signal at the center horizontal graticule line. The measuring receiver displays the inverse of the frequency response relative to the calibrator.

For frequencies below 250 kHz the output of a function generator is fed through a power splitter to an ac digital volt meter (ACDVM) and to the spectrum analyzer. At each function generator frequency setting and spectrum analyzer center frequency setting, the function generator power level is adjusted to place the displayed signal at the spectrum analyzer center horizontal graticule line. The ACDVM is used to measure the function generator output signal level in dBm.

ManualsPlus.com

Figure 8-14 Frequency Response Test Setup, 250 kHz to 2.9 GHz

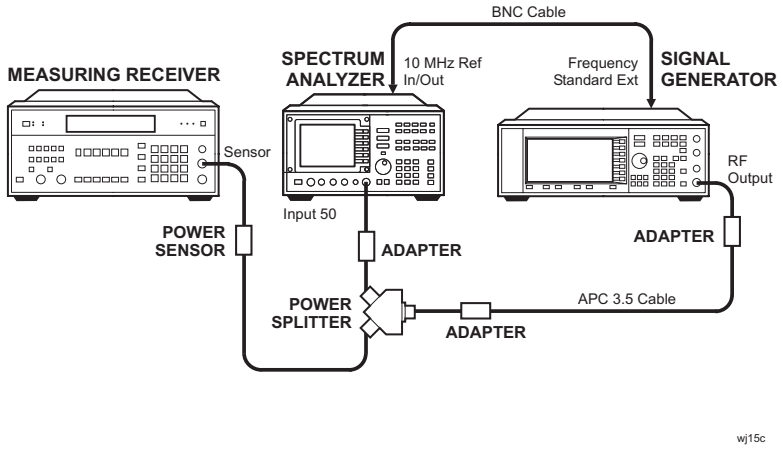

Figure 8-15 Frequency Response Test Setup, 2.9 MHz to 6.5 GHz

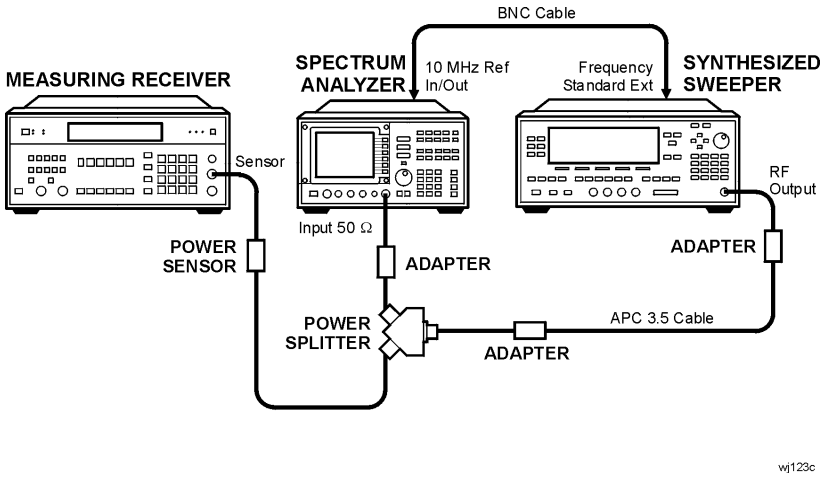

Figure 8-16 Frequency Response Test Setup, ≤250 kHz

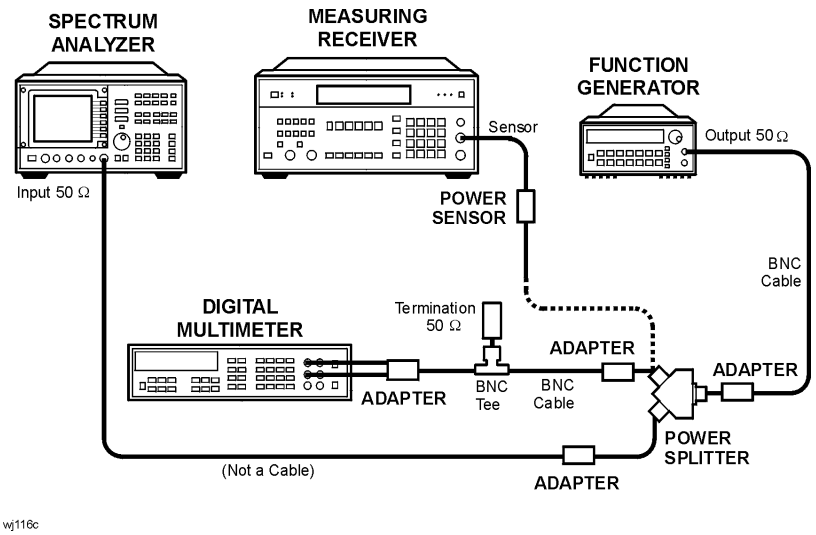

ManualsPlus.com

Equipment

Measuring receiver 8902A

Synthesized sweeper 83640B

Function Generator . . . . . 3324A or 33127A

Signal generator E4421B

AC Digital Voltmeter 3458A

Power sensor 8481A

Power sensor 8482A

Power splitter 11667A

Coaxial 50 Ω termination 908A

Adapters

APC-3.5 (f) to 2.4 mm (f) 11901B

Type N (m) to type N (m) 1250-1475

Type N (m) to BNC (f) *(2 required)* 1250-1476

Type N (m) to APC 3.5 (f) *(2 required)* 1250-1744

BNC (f) to Dual Banana Plug 1251-2816

BNC Tee 1250-0781

Cables

BNC, 122 cm (48 in) *(2 required)* 10503A

APC-3.5, 91 cm (36 in) 8120-4921

DVM test leads 34118A

Procedure

1. Zero and calibrate the Agilent 8902A and the Agilent 8482A in log mode, as described in the Agilent 8902A Operation Manual. Enter the power sensor 300 MHz calibration factor into the Agilent 8902A.
2. Connect the equipment as shown in Figure 8-14.
3. On the Agilent E4421B, press **INSTR PRESET**. Set the controls as follows:

   CW frequency . . . . . 300 MHz

   Frequency increment . . . . . 100 MHz

ManualsPlus.com

Amplitude . . . . . –4 dBm

4. On the spectrum analyzer, press **PRESET**. Set the controls as follows:

   Center frequency . . . . . 300 MHz

   Center frequency step . . . . . 100 MHz

   Span . . . . . 0 Hz

   Reference level . . . . . –5 dBm

   dB/division . . . . . 1 dB

   Resolution BW . . . . . 30 kHz

5. On the spectrum analyzer, press **MKR**.
6. On the Agilent E4421B, adjust the power level for a MKR amplitude of –10 dBm ±0.05 dB.
7. Press **RATIO** on the Agilent 8902A.

DC Coupled Frequency Response, Band 0 (250 kHz to 2.9 GHz)

8. On the spectrum analyzer, press **AMPLITUDE, MORE 1 OF 3**, and **COUPLING DC**.
9. Set the Agilent E4421B frequency to 250 kHz.
10. On the spectrum analyzer, press **FREQUENCY**, **CENTER FREQ**, 250, and **kHz**.
11. On the Agilent E4421B, adjust the power level for a spectrum analyzer MKR amplitude reading of –10 dBm ±0.05 dB.
12. Enter the 0.3 MHz power sensor calibration factor, indicated in Table 8-25, into the Agilent 8902A.
13. Record the negative of the power ratio displayed on the Agilent 8902A as the Agilent 8902A reading in Table 8-25. Record the power ratio here exactly as it is displayed on the Agilent 8902A:

    Agilent 8902A reading at 250 kHz:_____ dB

14. Set the Agilent E4421B to 1.0 MHz.
15. On the spectrum analyzer, press **FREQUENCY, CENTER FREQ**, 1.0, and **MHz**.
16. On the Agilent E4421B, adjust the power level for a spectrum analyzer MKR amplitude reading of –10 dBm ±0.05 dB.

ManualsPlus.com

17. Enter the 1 MHz power sensor calibration factor, indicated in Table 8-25, into the Agilent 8902A.
18. Record the negative of the power ratio displayed on the Agilent 8902A, as the Agilent 8902A reading in Table 8-25.
19. On the Agilent E4421B, set the frequency to the next value listed in Table 8-25.
20. On the spectrum analyzer, set the center frequency to the next value listed in Table 8-25.
21. On the Agilent E4421B, adjust the power level for a spectrum analyzer MKR amplitude reading of –10 dBm ±0.05 dB.
22. Enter the power sensor calibration factor, indicated in Table 8-25, into the Agilent 8902A.
23. Record the negative of the power ratio displayed on the Agilent 8902A, as the Agilent 8902A reading in Table 8-25.
24. To step through the remaining frequencies listed in Table 8-25, repeat step 19 through step 23.

NOTE It will be necessary to enter the last source and spectrum analyzer frequency, 2.9 GHz, manually; the step functions will set the frequency to 2.95 GHz.

AC Coupled Frequency Response, Band 0 (250kHz to 2.9 GHz)

25. On the spectrum analyzer, press **AMPLITUDE, MORE 1 OF 3**, and **COUPLING AC**.
26. Set the Agilent E4421B to 250 kHz.
27. On the spectrum analyzer, press **FREQUENCY, CENTER FREQ**, 250, and **kHz**.
28. On the Agilent E4421B, adjust the power level for a spectrum analyzer MKR amplitude reading of –10 dBm ±0.05 dB.
29. Enter the 0.3 MHz power sensor calibration factor, indicated in Table 8-26, into the Agilent 8902A.
30. Record the negative of the power ratio displayed on the Agilent 8902A as the Agilent 8902A reading in Table 8-26. Record the power ratio here exactly as it is displayed on the Agilent 8902A:

Agilent 8902A reading at 250 kHz: _____ dB

ManualsPlus.com

31. Set the Agilent E4421B to 1.0 MHz.
32. On the spectrum analyzer, press **FREQUENCY**, **CENTER FREQ**, 1.0, and **MHz**.
33. On the Agilent 83640B, adjust the power level for a spectrum analyzer MKR amplitude reading of –10 dBm ±0.05 dB.
34. Enter the 1.0 MHz power sensor calibration factor, indicated in Table 8-26, into the Agilent 8902A.
35. Record the negative of the power ratio displayed on the Agilent 8902A as the Agilent 8902A reading in Table 8-26.
36. On the Agilent E4421B, set the frequency to the next value listed in Table 8-26.
37. On the spectrum analyzer, set the center frequency to the next value listed in Table 8-26.
38. On the Agilent E4421B, adjust the power level for a spectrum analyzer MKR amplitude reading of –10 dBm ±0.05 dB.
39. Enter the power sensor calibration factor, indicated in Table 8-26, into the Agilent 8902A.
40. Record the negative of the power ratio displayed on the Agilent 8902A as the Agilent 8902A reading in Table 8-26.
41. To step through the remaining frequencies listed in Table 8-26, repeat step 36 through step 40.

NOTE It is necessary to enter the last source and spectrum analyzer frequency, (2.9 GHz) manually. The step functions will set the frequency to 2.95 GHz.

DC Coupled Frequency Response, Band 1 (2.9 GHz to 6.50 GHz)

42. Connect the equipment as shown in Figure 8-15.
43. Zero and calibrate the Agilent 8902A with the Agilent 8481A.
44. On the spectrum analyzer, press **FREQUENCY,** 2.95, and **GHz**.
45. Set the Agilent 83640B frequency to 2.95 GHz.
46. On the spectrum analyzer, press **AUX CTRL, INTERNAL MIXER**, and **PRESEL AUTO PK**. Wait for the PEAKING message to disappear.
47. On the Agilent 83640B, adjust the power level for a spectrum analyzer MKR amplitude reading of –10 dBm ±0.05 dB.
48. Enter the 3.0 GHz power sensor calibration factor, indicated in

ManualsPlus.com

Table 8-27, into the Agilent 8902A.

49. Record the negative of the power ratio displayed on the Agilent 8902A as the Agilent 8902A reading in Table 8-27.

50. On the Agilent 83640B, set the frequency to the next value listed in Table 8-27.

51. On the spectrum analyzer, set the center frequency to the next value listed in Table 8-27.

52. On the Agilent 83640B, adjust the power level for a spectrum analyzer MKR amplitude reading of –10 dBm ±0.05 dB.

53. Enter the power sensor calibration factor, indicated in Table 8-27, into the Agilent 8902A.

54. Record the negative of the power ratio displayed on the Agilent 8902A as the Agilent 8902A reading in Table 8-27.

55. To step through the remaining frequencies listed in Table 8-27, repeat step 50 through step 54.

NOTE It will be necessary to enter the last source and spectrum analyzer frequency, 6.5 GHz, manually; the step functions will set the frequency to 6.55 GHz.

AC Coupled Frequency Response, Band 1 (2.9 GHz to 6.50 GHz)

56. On the spectrum analyzer, press **FREQUENCY,** 2.95, and **GHz**.

57. Set the Agilent 83640B frequency to 2.95 GHz.

58. On the spectrum analyzer, press **AUX CTRL, INTERNAL MIXER**, and **PRESEL AUTO PK**. Wait for the PEAKING message to disappear.

59. On the Agilent 83640B, adjust the power level for a spectrum analyzer MKR amplitude reading of –10 dBm ±0.05 dB.

60. Enter the 3.0 GHz power sensor calibration factor, indicated in Table 8-28, into the Agilent 8902A.

61. Record the negative of the power ratio displayed on the Agilent 8902A as the Agilent 8902A reading in Table 8-28.

62. On the Agilent 83640B, set the frequency to the next value listed in Table 8-28.

63. On the spectrum analyzer, set the center frequency to the next value listed in Table 8-28.

64. On the Agilent 83640B, adjust the power level for a spectrum analyzer MKR amplitude reading of –10 dBm ±0.05 dB.

ManualsPlus.com

65. Enter the power sensor calibration factor, indicated in Table 8-28, into the Agilent 8902A.

66. Record the negative of the power ratio displayed on the Agilent 8902A as the Agilent 8902A reading in Table 8-28.

67. To step through the remaining frequencies listed in Table 8-28, repeat step 62 through step 66.

NOTE It will be necessary to enter the last source and spectrum analyzer frequency, 6.5 GHz, manually; the step functions will set the frequency to 6.55 GHz.

DC Coupled Frequency Response (≤250 kHz)

68. On the spectrum analyzer, press **AMPLITUDE, MORE 1 OF 3**, and **COUPLING DC**. Set the controls as follows:

    Center frequency . . . . . 250 kHz

    Span . . . . . 100 Hz

    Resolution BW . . . . . 10 Hz

    Marker . . . . . off

    Video BW . . . . . 1 Hz

69. On the Agilent 3324A, set the controls as follows:

    Frequency . . . . . 250 kHz

    Amplitude . . . . . –4 dBm

    Amplitude increment . . . . . 0.01 dB

70. On the Agilent 3458A, set the controls as follows:

    Function . . . . . Sync AC Volts

    Math . . . . . dBm

    RES Register . . . . . 50 Ω

    Front/Rear Terminal . . . . . Front

    Resolution . . . . . 7.5 digits

71. Connect the equipment as shown in Figure 8-12 with the Agilent 8482A power sensor and Agilent 8902A connected to the power splitter.

72. Enter the power sensor calibration factor for 0.3 MHz into the

ManualsPlus.com

Agilent 8902A.

73. Zero and calibrate the sensor.

74. Adjust the Agilent 3324A amplitude until the Agilent 8902A display reads the same value as recorded in step 13.

75. Disconnect the Agilent 8482A power sensor from the power splitter and connect the Agilent 3458A.

76. Record the Agilent 3458A reading here and in Table 8-29:

Agilent 3458A reading at 250 kHz: _____ dBm

77. On the spectrum analyzer, press **PEAK SEARCH** and **MARKER DELTA**.

78. Set the spectrum analyzer CENTER FREQ and the Agilent 3324A frequency to the next frequency listed in Table 8-29.

79. Press **PEAK SEARCH** on the spectrum analyzer.

80. Adjust the Agilent 3324A amplitude for a Δ MKR amplitude reading of 0.00 dBm ±0.05 dB.

81. Record the Agilent 3458A amplitude readings in Table 8-29 as the ACDMV amplitude.

82. To step through the remaining frequencies listed in Table 8-29, repeat step 78 through step 81

83. For each of the frequencies listed in Table 8-29, subtract the ACDVM amplitude reading from the ACDVM reading at 250 kHz recorded in step 76. Record the results as the response relative to 250 kHz in Table 8-29.

84. Add to each of the response relative to 250 kHz entries in Table 8-29 the Agilent 8902A reading for 250 kHz listed in Table 8-25. Use the value from Table 8-29 for the ac coupled frequency. Record the results as the response relative to 300 MHz in Table 8-29.

Test Results

85. Enter the results of the dc coupled frequency response, Band 0, below:

86. a. Enter the most positive number from Table 8-29, column 4. _____ dB

87. b. Enter the most positive number from Table 8-25, column 2. _____ dB

ManualsPlus.com

c. Of (a) and (b), enter whichever number is *more* positive. _____ dB

88.d. Enter the most negative number from Table 8-29, column 4. _____ dB

89.e. Enter the most negative number from Table 8-25, column 2. _____ dB

f. Of (c) and (d), enter whichever number is *more* negative. _____ dB

g. Subtract (f) from (c). _____ dB

90.Enter the results of the ac coupled frequency response, Band 0, below:

a. Enter the most positive number from Table 8-26, column 2. _____ dB

b. Enter the most negative number from Table 8-26, column 2. _____ dB

c. Subtract (b) from (a). _____ dB

91.Enter the results of the dc coupled frequency response, Band 1, below:

a. Enter the most positive number from Table 8-27, column 2. _____ dB

b. Enter the most negative number from Table 8-27, column 2. _____ dB

c. Subtract (b) from (a). _____ dB

92.Enter the results of the ac coupled frequency response, Band 1, below:

b. Enter the most positive number from Table 8-28, column 2. _____ dB

c. Enter the most negative number from Table 8-28, column 2. _____ dB

d. Subtract (b) from (a). _____ dB

ManualsPlus.com

Band Switching Uncertainty

93. Band 0 to Band 1 results (dc coupled):

a. Enter the value recorded in step 85 (c): _____ dB

b. Enter the value recorded in step 91 (b): _____ dB

c. Compute the absolute value of the difference between these two entries. _____ dB

94. Band 1 to Band 0 results (dc coupled):

a. Enter the value recorded in step 85 66 (f): _____ dB

b. Enter the value recorded in step 91 67 (a): _____ dB

c. Compute the absolute value of the difference between these two entries. _____ dB

95. Band 0 to Band 1 results (ac coupled):

a. Enter the value recorded in step 90 (c): _____ dB

b. Enter the value recorded in step 92 (b): _____ dB

c. Compute the absolute value of the difference between these two entries. _____ dB

96. Band 1 to Band 0 results (ac coupled):

a. Enter the value recorded in step 90 (f): _____ dB

b. Enter the value recorded in step 92 (a): _____ dB

c. Compute the absolute value of the difference between these two entries. _____ dB

ManualsPlus.com

Table 8-25 DC Coupled Frequency Response (250 kHz to 2.9 GHz)

Source Frequency (MHz)	Agilent 8902A Reading (dB)	Pwr Sensor Cal Factor Frequency (MHz)	Measurement Uncertainty (dB)
0.250		0.3	+0.32/–0.34
1		1	+0.32/–0.34
10		10	+0.32/–0.34
20		10	+0.32/–0.34
50		30	+0.32/–0.34
100		100	+0.32/–0.34
200		300	+0.32/–0.34
300		300	+0.32/–0.34
400		300	+0.32/–0.34
500		300	+0.32/–0.34
600		1000	+0.32/–0.34
700		1000	+0.32/–0.34
800		1000	+0.32/–0.34
900		1000	+0.32/–0.34
1000		1000	+0.32/–0.34
1100		1000	+0.32/–0.34
1200		1000	+0.32/–0.34
1300		1000	+0.32/–0.34
1400		1000	+0.32/–0.34
1500		1000	+0.32/–0.34
1600		2000	+0.32/–0.34
1700		2000	+0.32/–0.34
1800		2000	+0.32/–0.34
1900		2000	+0.32/–0.34
2000		2000	+0.32/–0.34
2100		2000	+0.32/–0.34
2200		2000	+0.32/–0.34
2300		2000	+0.32/–0.34
2400		2000	+0.32/–0.34
2500		2000	+0.32/–0.34
2600		3000	+0.32/–0.34
2700		3000	+0.32/–0.34
2800		3000	+0.32/–0.34
2900		3000	+0.32/–0.34

ManualsPlus.com

Table 8-26 AC Coupled Frequency Response(250 kHz to 2.9 GHz)

Source Frequency (MHz)	Agilent 8902A Reading (dB)	Pwr Sensor Cal Factor Frequency (MHz)	Measurement Uncertainty (dB)
0.250		0.3	+0.32/–0.34
1		1	+0.32/–0.34
10		10	+0.32/–0.34
20		10	+0.32/–0.34
50		30	+0.32/–0.34
100		100	+0.32/–0.34
200		300	+0.32/–0.34
300		300	+0.32/–0.34
400		300	+0.32/–0.34
500		300	+0.32/–0.34
600		1000	+0.32/–0.34
700		1000	+0.32/–0.34
800		1000	+0.32/–0.34
900		1000	+0.32/–0.34
1000		1000	+0.32/–0.34
1100		1000	+0.32/–0.34
1200		1000	+0.32/–0.34
1300		1000	+0.32/–0.34
1400		1000	+0.32/–0.34
1500		1000	+0.32/–0.34
1600		2000	+0.32/–0.34
1700		2000	+0.32/–0.34
1800		2000	+0.32/–0.34
1900		2000	+0.32/–0.34
2000		2000	+0.32/–0.34
2100		2000	+0.32/–0.34
2200		2000	+0.32/–0.34
2300		2000	+0.32/–0.34
2400		2000	+0.32/–0.34
2500		2000	+0.32/–0.34
2600		3000	+0.32/–0.34
2700		3000	+0.32/–0.34
2800		3000	+0.32/–0.34
2900		3000	+0.32/–0.34

ManualsPlus.com

Table 8-27 DC Coupled Frequency Response (2.9 GHz to 6.5 GHz)

Source Frequency (GHz)	Agilent 8902A Reading (dB)	Pwr Sensor Cal Factor Frequency (GHz)	Measurement Uncertainty (dB)
2.95		3.0	+0.44/–0.49
3.05		3.0	+0.44/–0.49
3.15		3.0	+0.44/–0.49
3.25		3.0	+0.44/–0.49
3.35		3.0	+0.44/–0.49
3.45		3.0	+0.44/–0.49
3.55		4.0	+0.44/–0.49
3.65		4.0	+0.44/–0.49
3.75		4.0	+0.44/–0.49
3.85		4.0	+0.44/–0.49
3.95		4.0	+0.44/–0.49
4.05		4.0	+0.44/–0.49
4.15		4.0	+0.44/–0.49
4.25		4.0	+0.44/–0.49
4.35		4.0	+0.44/–0.49
4.45		4.0	+0.44/–0.49
4.55		5.0	+0.44/–0.49
4.65		5.0	+0.44/–0.49
4.75		5.0	+0.44/–0.49
4.85		5.0	+0.44/–0.49
4.95		5.0	+0.44/–0.49
5.05		5.0	+0.44/–0.49
5.15		5.0	+0.44/–0.49
5.25		5.0	+0.44/–0.49
5.35		5.0	+0.44/–0.49
5.45		5.0	+0.44/–0.49
5.55		6.0	+0.44/–0.49
5.65		6.0	+0.44/–0.49
5.75		6.0	+0.44/–0.49
5.85		6.0	+0.44/–0.49
5.95		6.0	+0.44/–0.49
6.05		6.0	+0.44/–0.49
6.15		6.0	+0.44/–0.49
6.25		6.0	+0.44/–0.49
6.35		6.0	+0.44/–0.49
6.45		6.0	+0.44/–0.49
6.50		6.0	+0.44/–0.49

ManualsPlus.com

Table 8-28 AC Coupled Frequency Response (2.9 GHz to 6.5 GHz)

Source Frequency (GHz)	Agilent 8902A Reading (dB)	Pwr Sensor Cal Factor Frequency (GHz)	Measurement Uncertainty (dB)
2.95		3.0	+0.44/–0.49
3.05		3.0	+0.44/–0.49
3.15		3.0	+0.44/–0.49
3.25		3.0	+0.44/–0.49
3.35		3.0	+0.44/–0.49
3.45		3.0	+0.44/–0.49
3.55		4.0	+0.44/–0.49
3.65		4.0	+0.44/–0.49
3.75		4.0	+0.44/–0.49
3.85		4.0	+0.44/–0.49
3.95		4.0	+0.44/–0.49
4.05		4.0	+0.44/–0.49
4.15		4.0	+0.44/–0.49
4.25		4.0	+0.44/–0.49
4.35		4.0	+0.44/–0.49
4.45		4.0	+0.44/–0.49
4.55		5.0	+0.44/–0.49
4.65		5.0	+0.44/–0.49
4.75		5.0	+0.44/–0.49
4.85		5.0	+0.44/–0.49
4.95		5.0	+0.44/–0.49
5.05		5.0	+0.44/–0.49
5.15		5.0	+0.44/–0.49
5.25		5.0	+0.44/–0.49
5.35		5.0	+0.44/–0.49
5.45		5.0	+0.44/–0.49
5.55		6.0	+0.44/–0.49
5.65		6.0	+0.44/–0.49
5.75		6.0	+0.44/–0.49
5.85		6.0	+0.44/–0.49
5.95		6.0	+0.44/–0.49
6.05		6.0	+0.44/–0.49
6.15		6.0	+0.44/–0.49
6.25		6.0	+0.44/–0.49
6.35		6.0	+0.44/–0.49
6.45		6.0	+0.44/–0.49
6.50		6.0	+0.44/–0.49

ManualsPlus.com

Table 8-29 DC Coupled Frequency Response (<250 kHz)

Function Generator Frequency	ACDVM Amplitude (dBm)	Response Relative to 250 kHz	Response Relative to 300 MHz	Measurement Uncertainty (dB)
250 kHz		0 (Ref)		±0.23
100 kHz				±0.23
10 kHz				±0.23
1 kHz				±0.23
500 Hz				±0.23
200 Hz				±0.23

ManualsPlus.com

38a. Frequency Response: 8562E/EC

Instrument Under Test

8562E/EC

Related Specification

Relative Frequency Response
Absolute Frequency Response
Band Switching Uncertainty

Related Adjustment

Frequency Response Adjustment
LO Distribution Amplifier Adjustment

Description

For frequencies of 250 kHz and greater the output of a source is fed through a power splitter. One output of the power splitter is fed to a power sensor and then to a measuring receiver. The other output of the power splitter is fed to the spectrum analyzer. The source power level is adjusted at 300 MHz to place the displayed signal at the spectrum analyzer center horizontal graticule line. The measuring receiver, used as a power meter, is placed in ratio mode. At each new source frequency and spectrum analyzer center frequency, the source power level is adjusted to place the signal at the center horizontal graticule line. The measuring receiver displays the inverse of the frequency response relative to the calibrator.

For frequencies below 250 kHz the output of a function generator is fed through a power splitter to an ac digital volt meter (ACDVM) and to the spectrum analyzer. At each function generator frequency setting and spectrum analyzer center frequency setting, the function generator power level is adjusted to place the displayed signal at the spectrum analyzer center horizontal graticule line. The ACDVM is used to measure the function generator output signal level in dBm.

ManualsPlus.com

Figure 8-17 Frequency Response Test Setup, 250 kHz to 2.9 GHz

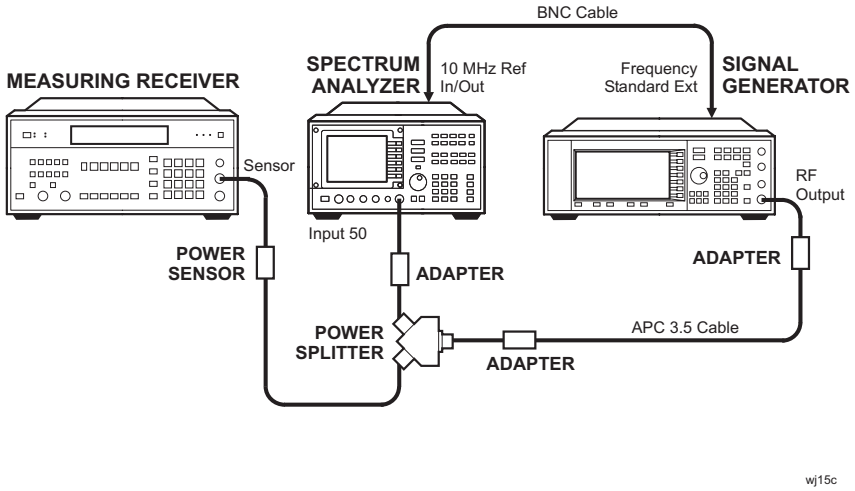

Figure 8-18 Frequency Response Test Setup, 2.9 MHz to 13.2 GHz

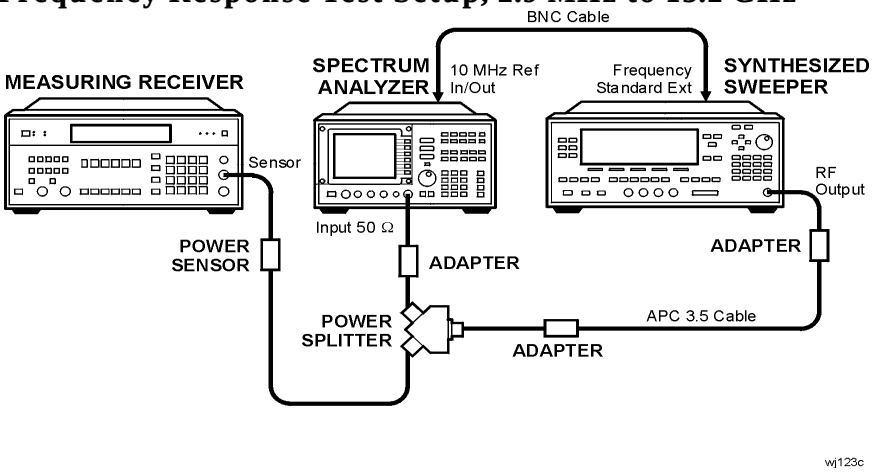

Figure 8-19 Frequency Response Test Setup, ≤250 kHz

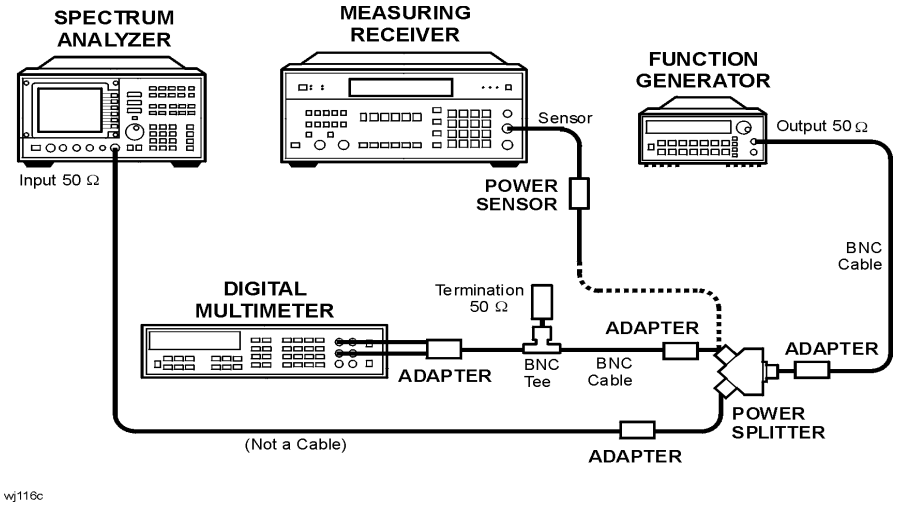

ManualsPlus.com

Equipment

Measuring receiver 8902A

Synthesized sweeper 83640B

Function Generator . . . . . 3324A or 33127A

Signal generator E4421B

AC Digital Voltmeter 3458A

Power sensor 8481A

Power sensor 8482A

Power splitter 11667A

Coaxial 50 Ω termination 908A

Adapters

APC-3.5 (f) to 2.4 mm (f) 11901B

Type N (m) to type N (m) 1250-1475

Type N (m) to BNC (f) *(2 required)* 1250-1476

Type N (m) to APC 3.5 (f) *(2 required)* 1250-1744

BNC (f) to Dual Banana Plug 1251-2816

BNC Tee 1250-0781

Cables

BNC, 122 cm (48 in) *(2 required)* 10503A

APC-3.5, 91 cm (36 in) 8120-4921

DVM test leads 34118A

ManualsPlus.com

Procedure

1. Zero and calibrate the Agilent 8902A and the Agilent 8482A in log mode, as described in the Agilent 8902A Operation Manual. Enter the power sensor 300 MHz calibration factor into the Agilent 8902A.
2. Connect the equipment as shown in Figure 8-17.
3. On the Agilent E4421B, press **INSTR PRESET**. Set the controls as follows:

   CW frequency . . . . . 300 MHz

   Frequency increment . . . . . 100 MHz

   Amplitude . . . . . –4 dBm
4. On the spectrum analyzer, press **PRESET**. Set the controls as follows:

   Center frequency . . . . . 300 MHz

   Center frequency step . . . . . 100 MHz

   Span . . . . . 0 Hz

   Reference level . . . . . –5 dBm

   dB/division . . . . . 1 dB

   Resolution BW . . . . . 30 kHz
5. On the spectrum analyzer, press **MKR**.
6. On the Agilent E4421B, adjust the power level for a MKR amplitude of –10 dBm ±0.05 dB.
7. Press **RATIO** on the Agilent 8902A.

DC Coupled Frequency Response, Band 0 (250 kHz to 2.9 GHz)

8. On the spectrum analyzer, press **AMPLITUDE, MORE 1 OF 3**, and **COUPLING DC**.
9. Set the Agilent E4421B frequency to 250 kHz.
10. On the spectrum analyzer, press **FREQUENCY**, **CENTER FREQ**, 250, and **kHz**.
11. On the Agilent E4421B, adjust the power level for a spectrum analyzer MKR amplitude reading of –10 dBm ±0.05 dB.
12. Enter the 0.3 MHz power sensor calibration factor, indicated in Table 8-30, into the Agilent 8902A.

ManualsPlus.com

13. Record the negative of the power ratio displayed on the 8902A as the Agilent 8902A reading in Table 8-30. Record the power ratio here exactly as it is displayed on the Agilent 8902A:

    Agilent 8902A reading at 250 kHz (dc coupled): _____ dB

14. Set the Agilent E4421B to 1.0 MHz.
15. On the spectrum analyzer, press **FREQUENCY, CENTER FREQ**, 1.0, and **MHz**.
16. On the Agilent E4421B, adjust the power level for a spectrum analyzer MKR amplitude reading of –10 dBm ±0.05 dB.
17. Enter the 1 MHz power sensor calibration factor, indicated in Table 8-30, into the Agilent 8902A.
18. Record the negative of the power ratio displayed on the Agilent 8902A, as the Agilent 8902A reading in Table 8-30.
19. On the Agilent E4421B, set the frequency to the next value listed in Table 8-30.
20. On the spectrum analyzer, set the center frequency to the next value listed in Table 8-30.
21. On the Agilent E4421B, adjust the power level for a spectrum analyzer MKR amplitude reading of –10 dBm ±0.05 dB.
22. Enter the power sensor calibration factor, indicated in Table 8-30, into the Agilent 8902A.
23. Record the negative of the power ratio displayed on the Agilent 8902A, as the Agilent 8902A reading in Table 8-30.
24. To step through the remaining frequencies listed in Table 8-30, repeat step 19 through step 23.

NOTE It will be necessary to enter the last source and spectrum analyzer frequency, 2.9 GHz, manually; the step functions will set the frequency to 2.95 GHz.

AC Coupled Frequency Response, Band 0 (250kHz to 2.9 GHz)

25. On the spectrum analyzer, press **AMPLITUDE, MORE 1 OF 3**, and **COUPLING AC**.
26. Set the Agilent E4421B to 300 MHz.

ManualsPlus.com

27. On the spectrum analyzer, press **FREQUENCY, CENTER FREQ**, 300, and **MHz**.

28. On the Agilent E4421B, adjust the power level for a spectrum analyzer MKR amplitude reading of –10 dBm ±0.05 dB.

29. Enter the 300 MHz power sensor calibration factor, indicated in Table 8-31, into the Agilent 8902A.

30. On the Agilent 8902A, press **RATIO**.

31. Set the Agilent E4421B to 250 kHz.

32. Enter the 0.3 MHz power sensor calibration factor, indicated in Table 8-31, into the Agilent 8902A.

33. On the Agilent E4421B, adjust the power level for a spectrum analyzer MKR amplitude reading of –10 dBm ±0.05 dB.

34. Record the negative of the power ratio displayed on the Agilent 8902A as the Agilent 8902A reading in Table 8-31. Record the power ratio here exactly as it is displayed on the Agilent 8902A:

Agilent 8902A reading at 250 kHz (ac coupled): _____ dB

35. Set the Agilent E4421B to 1.0 MHz.

36. On the spectrum analyzer, press **FREQUENCY**, **CENTER FREQ**, 1.0, and **MHz**.

37. On the Agilent E4421B, adjust the power level for a spectrum analyzer MKR amplitude reading of –10 dBm ±0.05 dB.

38. Enter the 1 MHz power sensor calibration factor, indicated in Table 8-31, into the Agilent 8902A.

39. Record the negative of the power ratio displayed on the Agilent 8902A as the Agilent 8902A reading in Table 8-31.

40. On the Agilent E4421B, set the frequency to the next value listed in Table 8-31.

41. On the spectrum analyzer, set the center frequency to the next value listed in Table 8-31.

42. On the Agilent E4421B, adjust the power level for a spectrum analyzer MKR amplitude reading of –10 dBm ±0.05 dB.

43. Enter the power sensor calibration factor, indicated in Table 8-31, into the Agilent 8902A.

44. Record the negative of the power ratio displayed on the Agilent 8902A as the Agilent 8902A reading in Table 8-31.

45. To step through the remaining frequencies listed in Table 8-31, repeat step 40 through step 44.

ManualsPlus.com

NOTE It is necessary to enter the last source and spectrum analyzer frequency, (2.9 GHz) manually. The step functions will set the frequency to 2.95 GHz.

DC Coupled Frequency Response, Band 1 (2.9 GHz to 6.5 GHz)

46. Connect the equipment as shown in Figure 8-18.
47. Zero and calibrate the Agilent 8902A with the Agilent 8481A.
48. On the spectrum analyzer, press **AMPLITUDE, MORE 1 OF 3**, and **COUPLING DC**.
49. On the spectrum analyzer, press **FREQUENCY,** 2.95, and **GHz**.
50. Set the Agilent 83640B frequency to 2.95 GHz.
51. On the spectrum analyzer, press **AUX CTRL, INTERNAL MIXER**, and **PRESEL AUTO PK**. Wait for the PEAKING message to disappear.
52. On the Agilent 83640B, adjust the power level for a spectrum analyzer MKR amplitude reading of –10 dBm ±0.05 dB.
53. Enter the 3.0 GHz power sensor calibration factor, indicated in Table 8-32, into the Agilent 8902A.
54. Record the negative of the power ratio displayed on the Agilent 8902A as the Agilent 8902A reading in Table 8-32.
55. On the Agilent 83640B, set the frequency to the next value listed in Table 8-32.
56. On the spectrum analyzer, set the center frequency to the next value listed in Table 8-32.
57. On the Agilent 83640B, adjust the power level for a spectrum analyzer MKR amplitude reading of –10 dBm ±0.05 dB.
58. Enter the power sensor calibration factor, indicated in Table 8-32, into the Agilent 8902A.
59. Record the negative of the power ratio displayed on the Agilent 8902A as the Agilent 8902A reading in Table 8-32.
60. To step through the remaining frequencies listed in Table 8-32, repeat step 55 through step 59.

NOTE It will be necessary to enter the last source and spectrum analyzer frequency, 6.5 GHz, manually; the step functions will set the frequency to 6.55 GHz.

ManualsPlus.com

DC Coupled Frequency Response, Band 2 (6.5 GHz to 13.2 GHz)

61. On the spectrum analyzer, press **FREQUENCY,** 6.5, **GHz**, **CF STEP**, 200, and **MHz**.
62. Set the Agilent 83640B frequency to 6.5 GHz and the FREQ STEP to 200 MHZ.
63. On the spectrum analyzer, press **AUX CTRL, INTERNAL MIXER**, and **PRESEL AUTO PK**. Wait for the PEAKING message to disappear.
64. On the Agilent 83640B, adjust the power level for a spectrum analyzer MKR amplitude reading of –10 dBm ±0.05 dB.
65. Enter the 3.0 GHz power sensor calibration factor, indicated in Table 8-33, into the Agilent 8902A.
66. Record the negative of the power ratio displayed on the Agilent 8902A as the Agilent 8902A reading in Table 8-33.
67. On the Agilent 83640B, set the frequency to the next value listed in Table 8-33.
68. On the spectrum analyzer, set the center frequency to the next value listed in Table 8-33.
69. On the Agilent 83640B, adjust the power level for a spectrum analyzer MKR amplitude reading of –10 dBm ±0.05 dB.
70. Enter the power sensor calibration factor, indicated in Table 8-33, into the Agilent 8902A.
71. Record the negative of the power ratio displayed on the Agilent 8902A as the Agilent 8902A reading in Table 8-33.
72. To step through the remaining frequencies listed in Table 8-33, repeat step 67 through step 71.

AC Coupled Frequency Response, Band 1 (2.9 GHz to 6.5 GHz)

73. On the spectrum analyzer, press **AMPLITUDE, MORE 1 OF 3**, and **COUPLING AC**.
74. On the spectrum analyzer, press **FREQUENCY,** 2.95, **GHz**.
75. Set the Agilent 83640B frequency to 2.95 GHz and the frequency step to 100 MHz.
76. On the spectrum analyzer, press **AUX CTRL, INTERNAL MIXER**, and **PRESEL AUTO PK**. Wait for the PEAKING message to disappear.

ManualsPlus.com

77. On the Agilent 83640B, adjust the power level for a spectrum analyzer MKR amplitude reading of –10 dBm ±0.05 dB.
78. Enter the 3.0 GHz power sensor calibration factor, indicated in Table 8-34, into the Agilent 8902A.
79. Record the negative of the power ratio displayed on the Agilent 8902A as the Agilent 8902A reading in Table 8-34.
80. On the Agilent 83640B, set the frequency to the next value listed in Table 8-34.
81. On the spectrum analyzer, set the center frequency to the next value listed in Table 8-34.
82. On the Agilent 83640B, adjust the power level for a spectrum analyzer MKR amplitude reading of –10 dBm ±0.05 dB.
83. Enter the power sensor calibration factor, indicated in Table 8-34, into the Agilent 8902A.
84. Record the negative of the power ratio displayed on the Agilent 8902A as the Agilent 8902A reading in Table 8-34.
85. To step through the remaining frequencies listed in Table 8-34, repeat step 80 through step 84.

NOTE It will be necessary to enter the last source and spectrum analyzer frequency, 6.5 GHz, manually; the step functions will set the frequency to 6.55 GHz.

AC Coupled Frequency Response, Band 2 (6.5 GHz to 13.2 GHz)

86. On the spectrum analyzer, press **FREQUENCY,** 6.5, **GHz**.
87. Set the Agilent 83640B frequency to 6.5 GHz and the FREQ STEP to 200 MHZ.
88. On the spectrum analyzer, press **AUX CTRL, INTERNAL MIXER**, and **PRESEL AUTO PK**. Wait for the PEAKING message to disappear.
89. On the Agilent 83640B, adjust the power level for a spectrum analyzer MKR amplitude reading of –10 dBm ±0.05 dB.
90. Enter the 6.0 GHz power sensor calibration factor, indicated in Table 8-35, into the Agilent 8902A.
91. Record the negative of the power ratio displayed on the Agilent 8902A as the Agilent 8902A reading in Table 8-35.
92. On the Agilent 83640B, set the frequency to the next value listed in Table 8-35.

ManualsPlus.com

93. On the spectrum analyzer, set the center frequency to the next value listed in Table 8-35.

94. On the Agilent 83640B, adjust the power level for a spectrum analyzer MKR amplitude reading of –10 dBm ±0.05 dB.

95. Enter the power sensor calibration factor, indicated in Table 8-35, into the Agilent 8902A.

96. Record the negative of the power ratio displayed on the Agilent 8902A as the Agilent 8902A reading in Table 8-35.

97. To step through the remaining frequencies listed in Table 8-35, repeat step 92 through step 96.

NOTE It will be necessary to enter the last source and spectrum analyzer frequency, 6.5 GHz, manually; the step functions will set the frequency to 6.55 GHz.

ManualsPlus.com

DC Coupled Frequency Response (≤250 kHz)

98. On the spectrum analyzer, press **AMPLITUDE, MORE 1 OF 3**, **COUPLING DC**. Set the controls as follows:

Center frequency . . . . . 250 kHz

Span . . . . . 100 Hz

Resolution BW . . . . . 10 Hz

Marker . . . . . off

Video BW . . . . . 1 Hz

99. On the Agilent 3324A, set the controls as follows:

Frequency . . . . . 250 kHz

Amplitude . . . . . –4 dBm

100. On the Agilent 3458A, set the controls as follows:

Function . . . . . Sync AC Volts

Math . . . . . dBm

RES Register . . . . . 50 Ω

Front/Rear Terminal . . . . . Front

Resolution . . . . . 7.5 digits

101. Connect the equipment as shown in Figure 8-19 with the Agilent 8482A power sensor and Agilent 8902A connected to the power splitter.

102. Enter the power sensor calibration factor for 0.1 MHz into the Agilent 8902A.

103. Zero and calibrate the sensor.

104. Adjust the Agilent 3324A amplitude until the Agilent 8902A display reads the same value as recorded in step 13.

105. Disconnect the Agilent 8482A power sensor from the power splitter and connect the Agilent 3458A.

106. Record the Agilent 3458A reading here and in Table 8-36:

Agilent 3458A reading at 250 kHz: _____ dBm

ManualsPlus.com

107. On the spectrum analyzer, press **PEAK SEARCH** and **MARKER DELTA**.

108. Set the spectrum analyzer CENTER FREQ and the Agilent 3324A frequency to the next frequency listed in Table 8-36.

109. Press **PEAK SEARCH** on the spectrum analyzer

110. Adjust the Agilent 3324A amplitude for a Δ MKR amplitude reading of 0.00 dBm ±0.05 dB.

111. Record the Agilent 3458A amplitude readings in Table 8-36 as the ACDMV amplitude.

112. To step through the remaining frequencies listed in Table 8-36, repeat step 108 through step 111.

113. For each of the frequencies listed in Table 8-36, subtract the ACDVM amplitude reading from the ACDVM amplitude reading at 250 kHz recorded in step 106. Record the results as the response relative to 250 kHz in Table 8-36.

114. Add to each of the response relative to 250 kHz entries in Table 8-36 the Agilent 8902A reading for 250 kHz listed in Table 8-30. Use the value from Table 8-36 for the ac coupled frequency. Record the results as the response relative to 300 MHz in Table 8-36.

ManualsPlus.com

Test Results

115. Enter the results of the dc coupled frequency response, Band 0, below:

a. Enter the most positive number from Table 8-36, column 4. _____ dB

b. Enter the most positive number from Table 8-30, column 2. _____ dB

c. Of (a) and (b), enter whichever number is *more* positive. _____ dB

d. Enter the most negative number from Table 8-36, column 4. _____ dB

e. Enter the most negative number from Table 8-30, column 2. _____ dB

f. Of (c) and (d), enter whichever number is *more* negative. _____ dB

g. Subtract (f) from (c). _____ dB

116. Enter the results of the ac coupled frequency response, Band 0, below:

a. Enter the most positive number from Table 8-31, column 2. _____ dB

b. Enter the most negative number from Table 8-31, column 2. _____ dB

c. Subtract (a) from (b). _____ dB

117. Enter the results of the dc coupled frequency response, Band 1, below:

a. Enter the most positive number from Table 8-32, column 2. _____ dB

b. Enter the most negative number from Table 8-32, column 2. _____ dB

c. Subtract (b) from (a). _____ dB

118. Enter the results of the dc coupled frequency response, Band 2, below:

a. Enter the most positive number from Table 8-33, column 2. _____ dB

ManualsPlus.com

b. Enter the most negative number from Table 8-33, column 2. _____ dB

c. Subtract (b) from (a). _____ dB

119. Enter the results of the ac coupled frequency response, Band 1, below:

b. Enter the most positive number from Table 8-34, column 2. _____ dB

c. Enter the most negative number from Table 8-34, column 2. _____ dB

d. Subtract (b) from (a). _____ dB

120. Enter the results of the ac coupled frequency response, Band 2, below:

a. Enter the most positive number from Table 8-35, column 2. _____ dB

b. Enter the most negative number from Table 8-35, column 2. _____ dB

c. Subtract (b) from (a). _____ dB

Frequency Response, Band 0, 100 MHz to 2.3 GHz

121. Enter the results of the dc coupled frequency response, Band 0, for the frequency range 100 MHz to 2.3 GHz:

122. a. Enter the most positive number from Table 8-30, column 2, for center frequencies between 100 MHz and 2.3 GHz. _____ dB

123. b. Enter the most negative number from Table 8-30, column 2, for center frequencies between 100 MHz and 2.3 GHz. _____ dB

c. Subtract (b) from (a). _____ dB

ManualsPlus.com

Band Switching Uncertainty DC Coupled

124. In the top row of Table 8-37, enter the values recorded in the indicated steps. For example, if step 118 (a) has a value of 1.22 dB, enter “1.22 dB” in the top row of the Band 2 column.

125. In the left column of Table 8-37, enter the values recorded in the indicated steps. For example, if step 118 (b) has a value of –0.95 dB, enter “–0.95 dB” in the left column of the Band 2 row.

126. Compute the other entries in Table 8-37 by taking the absolute value of the difference between the values in the left column and the top row.

Band Switching Uncertainty AC Coupled

127. In the top row of Table 8-38, enter the values recorded in the indicated steps. For example, if step 120 (a) has a value of 1.22 dB, enter “1.22 dB” in the top row of the Band 2 column.

128. In the left column of Table 8-38, enter the values recorded in the indicated steps. For example, if step 120 (b) has a value of –0.95 dB, enter “–0.95 dB” in the left column of the Band 2 row.

129. Compute the other entries in Table 8-38 by taking the absolute value of the difference between the values in the left column and the top row.

ManualsPlus.com

Table 8-30 DC Coupled Frequency Response, Band 0 (250 kHz to 2.9 GHz)

Source Frequency (MHz)	Agilent 8902A Reading (dB)	Pwr Sensor Cal Factor Frequency (MHz)	Measurement Uncertainty (dB)
0.250		0.01	+0.32/–0.34
1		1	+0.32/–0.34
10		10	+0.32/–0.34
20		10	+0.32/–0.34
50		30	+0.32/–0.34
100		100	+0.32/–0.34
200		300	+0.32/–0.34
300		300	+0.32/–0.34
400		300	+0.32/–0.34
500		300	+0.32/–0.34
600		1000	+0.32/–0.34
700		1000	+0.32/–0.34
800		1000	+0.32/–0.34
900		1000	+0.32/–0.34
1000		1000	+0.32/–0.34
1100		1000	+0.32/–0.34
1200		1000	+0.32/–0.34
1300		1000	+0.32/–0.34
1400		1000	+0.32/–0.34
1500		1000	+0.32/–0.34
1600		2000	+0.32/–0.34
1700		2000	+0.32/–0.34
1800		2000	+0.32/–0.34
1900		2000	+0.32/–0.34
2000		2000	+0.32/–0.34
2100		2000	+0.32/–0.34
2200		2000	+0.32/–0.34
2300		2000	+0.32/–0.34
2400		2000	+0.32/–0.34
2500		2000	+0.32/–0.34
2600		3000	+0.32/–0.34
2700		3000	+0.32/–0.34
2800		3000	+0.32/–0.34
2900		3000	+0.32/–0.34

ManualsPlus.com

Table 8-31 AC Coupled Frequency Response, Band0 (250 kHz to 2.9 GHz)

Source Frequency (MHz)	Agilent 8902A Reading (dB)	Pwr Sensor Cal Factor Frequency (MHz)	Measurement Uncertainty (dB)
0.250		0.01	+0.32/–0.34
1		1	+0.32/–0.34
10		10	+0.32/–0.34
20		10	+0.32/–0.34
50		30	+0.32/–0.34
100		100	+0.32/–0.34
200		300	+0.32/–0.34
300		300	+0.32/–0.34
400		300	+0.32/–0.34
500		300	+0.32/–0.34
600		1000	+0.32/–0.34
700		1000	+0.32/–0.34
800		1000	+0.32/–0.34
900		1000	+0.32/–0.34
1000		1000	+0.32/–0.34
1100		1000	+0.32/–0.34
1200		1000	+0.32/–0.34
1300		1000	+0.32/–0.34
1400		1000	+0.32/–0.34
1500		1000	+0.32/–0.34
1600		2000	+0.32/–0.34
1700		2000	+0.32/–0.34
1800		2000	+0.32/–0.34
1900		2000	+0.32/–0.34
2000		2000	+0.32/–0.34
2100		2000	+0.32/–0.34
2200		2000	+0.32/–0.34
2300		2000	+0.32/–0.34
2400		2000	+0.32/–0.34
2500		2000	+0.32/–0.34
2600		3000	+0.32/–0.34
2700		3000	+0.32/–0.34
2800		3000	+0.32/–0.34
2900		3000	+0.32/–0.34

ManualsPlus.com

Table 8-32 DC Coupled Frequency Response, Band 1 (2.9 GHz to 6.5 GHz)

Source Frequency (GHz)	Agilent 8902A Reading (dB)	Pwr Sensor Cal Factor Frequency (GHz)	Measurement Uncertainty (dB)
2.95		3.0	+0.44/–0.49
3.05		3.0	+0.44/–0.49
3.15		3.0	+0.44/–0.49
3.25		3.0	+0.44/–0.49
3.35		3.0	+0.44/–0.49
3.45		3.0	+0.44/–0.49
3.55		4.0	+0.44/–0.49
3.65		4.0	+0.44/–0.49
3.75		4.0	+0.44/–0.49
3.85		4.0	+0.44/–0.49
3.95		4.0	+0.44/–0.49
4.05		4.0	+0.44/–0.49
4.15		4.0	+0.44/–0.49
4.25		4.0	+0.44/–0.49
4.35		4.0	+0.44/–0.49
4.45		4.0	+0.44/–0.49
4.55		5.0	+0.44/–0.49
4.65		5.0	+0.44/–0.49
4.75		5.0	+0.44/–0.49
4.85		5.0	+0.44/–0.49
4.95		5.0	+0.44/–0.49
5.05		5.0	+0.44/–0.49
5.15		5.0	+0.44/–0.49
5.25		5.0	+0.44/–0.49
5.35		5.0	+0.44/–0.49
5.45		5.0	+0.44/–0.49
5.55		6.0	+0.44/–0.49
5.65		6.0	+0.44/–0.49
5.75		6.0	+0.44/–0.49
5.85		6.0	+0.44/–0.49
5.95		6.0	+0.44/–0.49
6.05		6.0	+0.44/–0.49
6.15		6.0	+0.44/–0.49
6.25		6.0	+0.44/–0.49
6.35		6.0	+0.44/–0.49
6.45		6.0	+0.44/–0.49
6.50		6.0	+0.44/–0.49

ManualsPlus.com

Table 8-33 DC Coupled Frequency Response, Band 2 (6.5 GHz to 13.2 GHz)

Source Frequency (GHz)	Agilent 8902A Reading (dB)	Pwr Sensor Cal Factor Frequency (GHz)	Measurement Uncertainty (dB)
6.5		6.0	+0.45/–0.50 dB
6.7		7.0	+0.45/–0.50 dB
6.9		7.0	+0.45/–0.50 dB
7.1		7.0	+0.45/–0.50 dB
7.3		7.0	+0.45/–0.50 dB
7.5		7.0	+0.45/–0.50 dB
7.7		8.0	+0.45/–0.50 dB
7.9		8.0	+0.45/–0.50 dB
8.1		8.0	+0.45/–0.50 dB
8.3		8.0	+0.45/–0.50 dB
8.5		8.0	+0.45/–0.50 dB
8.7		9.0	+0.45/–0.50 dB
8.9		9.0	+0.45/–0.50 dB
9.1		9.0	+0.45/–0.50 dB
9.3		9.0	+0.45/–0.50 dB
9.5		9.0	+0.45/–0.50 dB
9.7		10.0	+0.45/–0.50 dB
9.9		10.0	+0.45/–0.50 dB
10.1		10.0	+0.45/–0.50 dB
10.3		10.0	+0.45/–0.50 dB
10.5		10.0	+0.45/–0.50 dB
10.7		11.0	+0.45/–0.50 dB
10.9		11.0	+0.45/–0.50 dB
11.1		11.0	+0.45/–0.50 dB
11.3		11.0	+0.45/–0.50 dB
11.5		11.0	+0.45/–0.50 dB
11.7		12.0	+0.45/–0.50 dB
11.9		12.0	+0.45/–0.50 dB
12.1		12.0	+0.45/–0.50 dB
12.3		12.0	+0.45/–0.50 dB
12.5		12.0	+0.45/–0.50 dB
12.7		13.0	+0.45/–0.50 dB
12.9		13.0	+0.45/–0.50 dB
13.1		13.0	+0.45/–0.50 dB
13.2		13.0	+0.45/–0.50 dB

ManualsPlus.com

Table 8-34 AC Coupled Frequency Response, Band 1 (2.9 GHz to 6.5 GHz)

Source Frequency (GHz)	Agilent 8902A Reading (dB)	Pwr Sensor Cal Factor Frequency (GHz)	Measurement Uncertainty (dB)
2.95		3.0	+0.44/–0.49
3.05		3.0	+0.44/–0.49
3.15		3.0	+0.44/–0.49
3.25		3.0	+0.44/–0.49
3.35		3.0	+0.44/–0.49
3.45		3.0	+0.44/–0.49
3.55		4.0	+0.44/–0.49
3.65		4.0	+0.44/–0.49
3.75		4.0	+0.44/–0.49
3.85		4.0	+0.44/–0.49
3.95		4.0	+0.44/–0.49
4.05		4.0	+0.44/–0.49
4.15		4.0	+0.44/–0.49
4.25		4.0	+0.44/–0.49
4.35		4.0	+0.44/–0.49
4.45		4.0	+0.44/–0.49
4.55		5.0	+0.44/–0.49
4.65		5.0	+0.44/–0.49
4.75		5.0	+0.44/–0.49
4.85		5.0	+0.44/–0.49
4.95		5.0	+0.44/–0.49
5.05		5.0	+0.44/–0.49
5.15		5.0	+0.44/–0.49
5.25		5.0	+0.44/–0.49
5.35		5.0	+0.44/–0.49
5.45		5.0	+0.44/–0.49
5.55		6.0	+0.44/–0.49
5.65		6.0	+0.44/–0.49
5.75		6.0	+0.44/–0.49
5.85		6.0	+0.44/–0.49
5.95		6.0	+0.44/–0.49
6.05		6.0	+0.44/–0.49
6.15		6.0	+0.44/–0.49
6.25		6.0	+0.44/–0.49
6.35		6.0	+0.44/–0.49
6.45		6.0	+0.44/–0.49
6.50		6.0	+0.44/–0.49

ManualsPlus.com

Table 8-35 AC Coupled Frequency Response, Band 2 (6.5 GHz to 13.2 GHz)

Source Frequency (GHz)	Agilent 8902A Reading (dB)	Pwr Sensor Cal Factor Frequency (GHz)	Measurement Uncertainty (dB)
6.5		6.0	+0.45/–0.50
6.7		7.0	+0.45/–0.50
6.9		7.0	+0.45/–0.50
7.1		7.0	+0.45/–0.50
7.3		7.0	+0.45/–0.50
7.5		7.0	+0.45/–0.50
7.7		8.0	+0.45/–0.50
7.9		8.0	+0.45/–0.50
8.1		8.0	+0.45/–0.50
8.3		8.0	+0.45/–0.50
8.5		8.0	+0.45/–0.50
8.7		9.0	+0.45/–0.50
8.9		9.0	+0.45/–0.50
9.1		9.0	+0.45/–0.50
9.3		9.0	+0.45/–0.50
9.5		9.0	+0.45/–0.50
9.7		10.0	+0.45/–0.50
9.9		10.0	+0.45/–0.50
10.1		10.0	+0.45/–0.50
10.3		10.0	+0.45/–0.50
10.5		10.0	+0.45/–0.50
10.7		11.0	+0.45/–0.50
10.9		11.0	+0.45/–0.50
11.1		11.0	+0.45/–0.50
11.3		11.0	+0.45/–0.50
11.5		11.0	+0.45/–0.50
11.7		12.0	+0.45/–0.50
11.9		12.0	+0.45/–0.50
12.1		12.0	+0.45/–0.50
12.3		12.0	+0.45/–0.50
12.5		12.0	+0.45/–0.50
12.7		13.0	+0.45/–0.50
12.9		13.0	+0.45/–0.50
13.1		13.0	+0.45/–0.50
13.2		13.0	+0.45/–0.50

ManualsPlus.com

Table 8-36 DC Coupled Frequency Response (<250 kHz)

Function Generator Frequency	ACDVM Amplitude (dBm)	Response Relative to 250 kHz	Response Relative to 300 MHz	Measurement Uncertainty (dB)
250 kHz		0 (Ref)		±0.23
100 kHz				±0.23
10 kHz				±0.23
1 kHz				±0.23
500 Hz				±0.23
200 Hz				±0.23

ManualsPlus.com

Table 8-37 Band Switching Uncertainty DC Coupled

	Band 0 Step 115c _____	Band 1 Step 117a _____	Band 2 Step 118a _____
Band 0 Step 115f _____	N/A	_____	_____
Band 1 Step 117b _____	_____	N/A	_____
Band 2 Step 118b _____	_____	_____	N/A

Table 8-38 Band Switching Uncertainty AC Coupled

	Band 0 Step 116c _____	Band 1 Step 119a _____	Band 2 Step 119a _____
Band 0 Step 116f _____	N/A	_____	_____
Band 1 Step 119b _____	_____	N/A	_____
Band 2 Step 120b _____	_____	_____	N/A

ManualsPlus.com

39a. Frequency Response: Agilent 8563E/EC

Instrument Under Test

Agilent 8563E/EC

Related Specification

Relative Frequency Response
Absolute Frequency Response
Band Switching Uncertainty

Related Adjustment

RYTHM Adjustment
Frequency Response Adjustment
LO Distribution Amplifier Adjustment

Description

For frequencies of 250 kHz and greater the output of a source is fed through a power splitter. One output of the power splitter is fed to a power sensor and then to a measuring receiver. The other output of the power splitter is fed to the spectrum analyzer. The source power level is adjusted at 300 MHz to place the displayed signal at the spectrum analyzer center horizontal graticule line. The measuring receiver, used as a power meter, is placed in ratio mode. At each new source frequency and spectrum analyzer center frequency, the source power level is adjusted to place the signal at the center horizontal graticule line. The measuring receiver displays the inverse of the frequency response relative to the calibrator.

For frequencies below 250 kHz the output of a function generator is fed through a power splitter to an ac digital volt meter (ACDVM) and to the spectrum analyzer. At each function generator frequency setting and spectrum analyzer center frequency setting, the function generator power level is adjusted to place the displayed signal at the spectrum analyzer center horizontal graticule line. The ACDVM is used to measure the function generator output signal level in dBm.

ManualsPlus.com

Figure 8-20 Frequency Response Test Setup, 250 kHz to 2.9 GHz

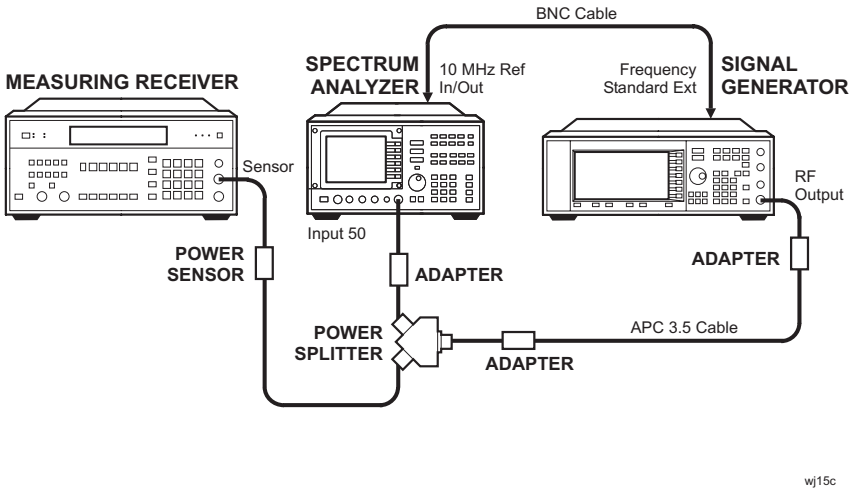

Figure 8-21 Frequency Response Test Setup, 2.9 MHz to 26.5 GHz

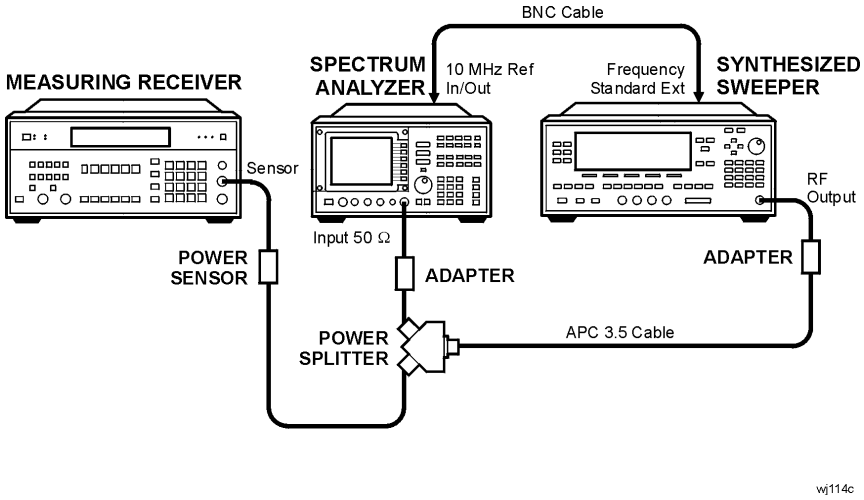

Figure 8-22 Frequency Response Test Setup, ≤250 kHz (Option 006, only)

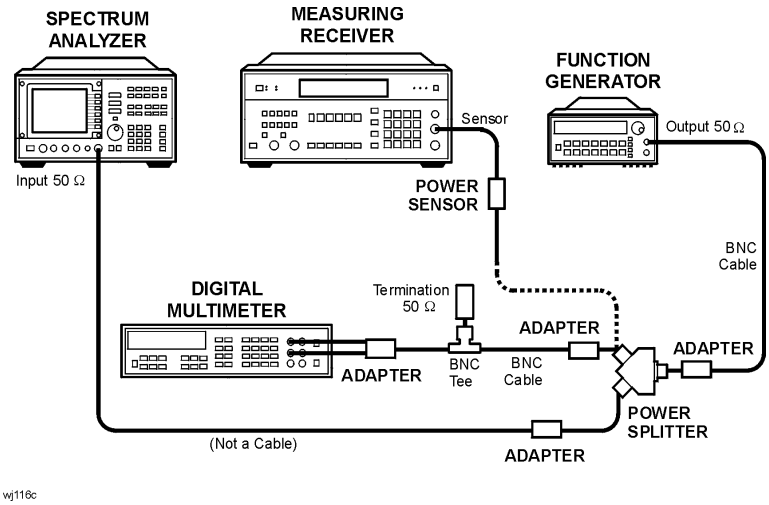

ManualsPlus.com

Equipment

Measuring receiver . . . . . Agilent 8902A

Synthesized sweeper . . . . . Agilent 83640B

Function Generator . . . . . Agilent 3324A or Agilent 33127A

Signal generator . . . . . Agilent E4421B

AC Digital Voltmeter . . . . . Agilent 3458A

Power sensor . . . . . Agilent 8482A

Power sensor . . . . . Agilent 8485A

Power splitter . . . . . Agilent 11667A

Power splitter . . . . . Agilent 11667B

Coaxial 50 Ω termination . . . . . Agilent 908A

Adapters

APC-3.5 (f) to 2.4 mm (f) . . . . . Agilent 11901B

Type [N (m) to type N (m) 1250-1475

Type N (m) to BNC (f) *(2 required)* 1250-1476

Type N (m) to APC 3.5 (f) *(2 required)* 1250-1744

Type N (m) to APC 3.5 (m) 1250-1743

BNC (f) to Dual Banana Plug 1251-2816

BNC Tee 1250-0781

Cables

BNC, 122 cm (48 in) *(2 required)* . . . . . Agilent 10503A

APC-3.5, 91 cm (36 in) 8120-4921

DVM test leads . . . . . Agilent 34118A

Procedure

1. Zero and calibrate the Agilent 8902A and the Agilent 8482A in log mode, as described in the Agilent 8902A Operation Manual. Enter the power sensor 300 MHz calibration factor into the Agilent 8902A.
2. Connect the equipment as shown in Figure 8-20.

ManualsPlus.com

3. On the Agilent E4421B, press **INSTR PRESET**. Set the controls as follows:

   CW frequency . . . . . 300 MHz

   Frequency increment . . . . . 100 MHz

   Amplitude . . . . . –4 dBm

4. On the spectrum analyzer, press **PRESET**. Press **RECALL**, **MORE 1 OF 2,** and **FACTORY PRSEL PK**. Set the controls as follows:

   Center frequency . . . . . 300 MHz

   Center frequency step . . . . . 100 MHz

   Span . . . . . 0 Hz

   Reference level. . . . . –5 dBm

   dB/division . . . . . 1 dB

   Resolution BW . . . . . 30 kHz

5. On the spectrum analyzer, press **MKR**.
6. On the Agilent E4421B, adjust the power level for a MKR amplitude of –10 dBm ±0.05 dB.
7. Press **RATIO** on the Agilent 8902A.

Frequency Response, Band 0 (250 kHz to 2.9 GHz)

8. Set the Agilent E4421B frequency to 250 kHz.
9. On the spectrum analyzer, press **FREQUENCY**, **CENTER FREQ**, 250, and **kHz**.
10. On the Agilent E4421B, adjust the power level for a spectrum analyzer MKR amplitude reading of –10 dBm ±0.05 dB.
11. Enter the 0.3 MHz power sensor calibration factor, indicated in Table 8-39, into the Agilent 8902A.
12. Record the negative of the power ratio displayed on the Agilent 8902A as the Agilent 8902A reading in Table 8-39. Record the power ratio here exactly as it is displayed on the Agilent 8902A:

    Agilent 8902A reading at 250 kHz: _____ dB

ManualsPlus.com

13. Set the Agilent E4421B to 1.0 MHz.
14. On the spectrum analyzer, press **FREQUENCY, CENTER FREQ**, 1.0, and **MHz**.
15. On the Agilent E4421B, adjust the power level for a spectrum analyzer MKR amplitude reading of –10 dBm ±0.05 dB.
16. Enter the 1.0 MHz power sensor calibration factor, indicated in Table 8-39, into the Agilent 8902A.
17. Record the negative of the power ratio displayed on the Agilent 8902A, as the Agilent 8902A reading in Table 8-39.
18. On the Agilent E4421B, set the frequency to the next value listed in Table 8-39.
19. On the spectrum analyzer, set the center frequency to the next value listed in Table 8-39.
20. On the Agilent E4421B, adjust the power level for a spectrum analyzer MKR amplitude reading of –10 dBm ±0.05 dB.
21. Enter the 0.3 MHz power sensor calibration factor, indicated in Table 8-39, into the Agilent 8902A.
22. Record the negative of the power ratio displayed on the Agilent 8902A, as the Agilent 8902A reading in Table 8-39.
23. To step through the remaining frequencies listed in Table 8-39, repeat step 18 through step 22.

NOTE It will be necessary to enter the last source and spectrum analyzer frequency, 2.9 GHz, manually; the step functions will set the frequency to 2.95 GHz.

ManualsPlus.com

Frequency Response, Band 1 (2.9 GHz to 6.5 GHz)

24. Connect the equipment as shown in Figure 8-21.
25. Zero and calibrate the Agilent 8902A with the Agilent 8481A.
26. On the spectrum analyzer, press **FREQUENCY,** 2.95, and **GHz**.
27. Set the Agilent 83640B frequency to 2.95 GHz.
28. On the spectrum analyzer, press **AUX CTRL, INTERNAL MIXER**, and **PRESEL AUTO PK**. Wait for the PEAKING message to disappear.
29. On the Agilent 83640B, adjust the power level for a spectrum analyzer MKR amplitude reading of –10 dBm ±0.05 dB.
30. Enter the 3.0 GHz power sensor calibration factor, indicated in Table 8-40, into the Agilent 8902A.
31. Record the negative of the power ratio displayed on the Agilent 8902A as the Agilent 8902A reading in Table 8-40.
32. On the Agilent 83640B, set the frequency to the next value listed in Table 8-40.
33. On the spectrum analyzer, set the center frequency to the next value listed in Table 8-40.
34. On the Agilent 83640B, adjust the power level for a spectrum analyzer MKR amplitude reading of –10 dBm ±0.05 dB.
35. Enter the power sensor calibration factor, indicated in Table 8-40, into the Agilent 8902A.
36. Record the negative of the power ratio displayed on the Agilent 8902A as the Agilent 8902A reading in Table 8-40.
37. To step through the remaining frequencies listed in Table 8-40, repeat step 32 through step 36.

ManualsPlus.com

Frequency Response, Band 2 (6.5 GHz to 13.2 GHz)

38. On the spectrum analyzer, press **FREQUENCY,** 6.5, **GHz**, **CF STEP**, 200, and **MHz**.
39. Set the Agilent 83640B frequency to 6.5 GHz and the FREQ STEP to 200 MHz.
40. On the spectrum analyzer, press **AUX CTRL, INTERNAL MIXER**, and **PRESEL AUTO PK**. Wait for the PEAKING message to disappear.
41. On the Agilent 83640B, adjust the power level for a spectrum analyzer MKR amplitude reading of –10 dBm ±0.05 dB.
42. Enter the 6.0 GHz power sensor calibration factor, indicated in Table 8-41, into the Agilent 8902A.
43. Record the negative of the power ratio displayed on the Agilent 8902A as the Agilent 8902A reading in Table 8-41.
44. On the Agilent 83640B, set the frequency to the next value listed in Table 8-41.
45. On the spectrum analyzer, set the center frequency to the next value listed in Table 8-41.
46. On the Agilent 83640B, adjust the power level for a spectrum analyzer MKR amplitude reading of –10 dBm ±0.05 dB.
47. Enter the power sensor calibration factor, indicated in Table 8-41, into the Agilent 8902A.
48. Record the negative of the power ratio displayed on the Agilent 8902A as the Agilent 8902A reading in Table 8-41.
49. To step through the remaining frequencies listed in Table 8-41, repeat step 44 through step 48.

NOTE It will be necessary to enter the last source and spectrum analyzer frequency, 13.2 GHz, manually; the step functions will set the frequency to 13.3 GHz.

ManualsPlus.com

Frequency Response, Band 3 (13.2 GHz to 26.5 GHz)

50. On the spectrum analyzer, press **FREQUENCY,** 13.25, **GHz**.
51. Set the Agilent 83640B frequency to 13.25 GHz.
52. On the spectrum analyzer, press **AUX CTRL, INTERNAL MIXER**, and **PRESEL AUTO PK**. Wait for the PEAKING message to disappear.
53. On the Agilent 83640B, adjust the power level for a spectrum analyzer MKR amplitude reading of –10 dBm ±0.05 dB.
54. Enter the 13.3 GHz power sensor calibration factor, indicated in Table 8-42, into the Agilent 8902A.
55. Record the negative of the power ratio displayed on the Agilent 8902A as the Agilent 8902A reading in Table 8-42.
56. On the Agilent 83640B, set the frequency to the next value listed in Table 8-42.
57. On the spectrum analyzer, set the center frequency to the next value listed in Table 8-42.
58. On the Agilent 83640B, adjust the power level for a spectrum analyzer MKR amplitude reading of –10 dBm ±0.05 dB.
59. Enter the power sensor calibration factor, indicated in Table 8-42, into the Agilent 8902A.
60. Record the negative of the power ratio displayed on the Agilent 8902A as the Agilent 8902A reading in Table 8-42.
61. To step through the remaining frequencies listed in Table 8-42, repeat step 56 through step 60.

ManualsPlus.com

Frequency Response (≤250 kHz) (Option 006 Only)

62. On the spectrum analyzer, set the controls as follows:

    Center frequency . . . . . 250 kHz

    Span . . . . . 100 Hz

    Resolution BW . . . . . 10 Hz

    Marker . . . . . off

63. On the Agilent 3324A, set the controls as follows:

    Frequency . . . . . 250 kHz

    Amplitude . . . . . –4 dBm

64. On the Agilent 3458A, set the controls as follows:

    Function . . . . . Sync AC Volts

    Math . . . . . dBm

    RES Register . . . . . 50 Ω

    Front/Rear Terminal . . . . . Front

    Resolution . . . . . 7.5 digits

65. Connect the equipment as shown in Figure 8-22 with the Agilent 8482A power sensor and Agilent 8902A connected to the power splitter.

66. Enter the 0.3 MHz power sensor calibration factor, indicated in Table 8-43, into the Agilent 8902A.

67. Zero and calibrate the sensor.

68. Adjust the Agilent 3324A amplitude until the Agilent 8902A display reads the same value as recorded in step 12.

69. Disconnect the Agilent 8482A power sensor from the power splitter and connect the Agilent 3458A.

70. Record the Agilent 3458A reading here and in Table 8-43:

    Agilent 3458A reading at 250 kHz: _____ dBm

71. On the spectrum analyzer, press **PEAK SEARCH** and **MARKER DELTA**.

72. Set the spectrum analyzer CENTER FREQ and the Agilent 3324A frequency to the next frequency listed in Table 8-43.

73. Press **PEAK SEARCH** on the spectrum analyzer.

ManualsPlus.com

74. Adjust the Agilent 3324A amplitude for a Δ MKR amplitude reading of 0.00 dBm ±0.05 dB.

75. Record the Agilent 3458A amplitude readings in Table 8-43 as the ACDMV amplitude.

76. To step through the remaining frequencies listed in Table 8-36, repeat step 72 through step 75.

77. For each of the frequencies listed in Table 8-43, subtract the ACDVM amplitude reading from the ACDVM amplitude reading at 250 kHz recorded in step 70. Record the results as the response relative to 250 kHz in Table 8-43.

78. Add to each of the response relative to 250 kHz entries in Table 8-43 the Agilent 8902A reading for 250 kHz listed in Table 8-39. Record the results as the response relative to 300 MHz in Table 8-43.

Test Results

79. Enter the results of the frequency response, Band 0, 250 kHz to 2.9 GHz.

a. Enter the most positive number from Table 8-42, column 4. _____ dB

b. Enter the most positive number from Table 8-39, column 2. _____ dB

c. Of (a) and (b), enter whichever number is *more* positive. _____ dB

d. Enter the most negative number from Table 8-42, column 4. _____ dB

e. Enter the most negative number from Table 8-39, column 2. _____ dB

f. Of (c) and (d), enter whichever number is *more* negative. _____ dB

g. Subtract (f) from (c). _____ dB

ManualsPlus.com

80. Enter the results of the frequency response, Band 1, 2.9 GHz to 6.5 GHz.

a. Enter the most positive number from Table 8-40, column 2. _____ dB

b. Enter the most negative number from Table 8-40, column 2. _____ dB

c. Subtract (b) from (a). _____ dB

81. Enter the results of the frequency response, Band 2, 6.5 GHz to 13.2 GHz.

a. Enter the most positive number from Table 8-41, column 2. _____ dB

b. Enter the most negative number from Table 8-41, column 2. _____ dB

c. Subtract (b) from (a). _____ dB

82. Frequency Response, Band 3, 13.2 GHz to 19.7 GHz

a. Enter the most positive number from Table 8-42, column 2 for center frequencies less than or equal to 22 GHz. _____ dB

b. Enter the most negative number from Table 8-42, column 2 for center frequencies less than or equal to 22 GHz. _____ dB

c. Subtract (b) from (a). _____ dB

83. Frequency Response, Band 3, 19.9 GHz to 26.5 GHz

a. Enter the most positive number from Table 8-42, column 2 for center frequencies greater than 22 GHz. _____ dB

b. Enter the most negative number from Table 8-42, column 2 for center frequencies greater than 22 GHz. _____ dB

c. Subtract (b) from (a). _____ dB

ManualsPlus.com

Frequency Response, Band 0, 100 MHz to 2.0 GHz

84. This step applies only to spectrum analyzers with serial number prefix 3645A or later. Enter the results of the frequency response, Band 0, for the frequency range 100 MHz to 2.0 GHz:

a. Enter the most positive number from Table 8-39, column 2, for center frequencies between 100 MHz and 2.0 GHz. _____ dB

b. Enter the most negative number from Table 8-39, column 2, for center frequencies between 100 MHz and 2.0 GHz. _____ dB

c. Subtract (b) from (a). _____ dB

85. Frequency Response, Band 3, 13.2 GHz to 26.5 GHz

a. Enter the most positive number from 53 (a) and 54 (a). _____ dB

b. Enter the most negative number from 53 (b) and 54 (b). _____ dB

Band Switching Uncertainty

86. In the top row of Table 8-44, enter the values recorded in the indicated steps. For example, if step 82 (a) has a value of 1.22 dB, enter “1.22 dB” in the top row of the Band 3 column.

87. In the left column of Table 8-44, enter the values recorded in the indicated steps. For example, if step 81 (b) has a value of –0.95 dB, enter “–0.95 dB” in the left column of the Band 2 row.

88. Compute the other entries in Table 8-44 by taking the absolute value of the difference between the values in the left column and the top row.

ManualsPlus.com

Table 8-39 Frequency Response, Band 0 (250 kHz to 2.9 GHz)

Source Frequency (MHz)	Agilent 8902A Reading (dB)	Pwr Sensor Cal Factor Frequency (MHz)	Measurement Uncertainty (dB)
0.250		0.01	+0.32/–0.34
1		1	+0.32/–0.34
10		10	+0.32/–0.34
20		10	+0.32/–0.34
50		30	+0.32/–0.34
150		100	+0.32/–0.34
250		300	+0.32/–0.34
350		300	+0.32/–0.34
450		300	+0.32/–0.34
550		300	+0.32/–0.34
650		1000	+0.32/–0.34
750		1000	+0.32/–0.34
850		1000	+0.32/–0.34
950		1000	+0.32/–0.34
1050		1000	+0.32/–0.34
1150		1000	+0.32/–0.34
1250		1000	+0.32/–0.34
1350		1000	+0.32/–0.34
1450		1000	+0.32/–0.34
1550		2000	+0.32/–0.34
1650		2000	+0.32/–0.34
1750		2000	+0.32/–0.34
1850		2000	+0.32/–0.34
1950		2000	+0.32/–0.34
2050		2000	+0.32/–0.34
2150		2000	+0.32/–0.34
2250		2000	+0.32/–0.34
2350		2000	+0.32/–0.34
2450		2000	+0.32/–0.34
2550		3000	+0.32/–0.34
2650		3000	+0.32/–0.34
2750		3000	+0.32/–0.34
2850		3000	+0.32/–0.34
2900		3000	+0.32/–0.34

ManualsPlus.com

Table 8-40 Frequency Response, Band 1 (2.9 GHz to 6.5 GHz)

Source Frequency (GHz)	Agilent 8902A Reading (dB)	Pwr Sensor Cal Factor Frequency (GHz)	Measurement Uncertainty (dB)
2.95		3.0	+0.44/–0.49
3.05		3.0	+0.44/–0.49
3.15		3.0	+0.44/–0.49
3.25		3.0	+0.44/–0.49
3.35		3.0	+0.44/–0.49
3.45		3.0	+0.44/–0.49
3.55		4.0	+0.44/–0.49
3.65		4.0	+0.44/–0.49
3.75		4.0	+0.44/–0.49
3.85		4.0	+0.44/–0.49
3.95		4.0	+0.44/–0.49
4.05		4.0	+0.44/–0.49
4.15		4.0	+0.44/–0.49
4.25		4.0	+0.44/–0.49
4.35		4.0	+0.44/–0.49
4.45		4.0	+0.44/–0.49
4.55		5.0	+0.44/–0.49
4.65		5.0	+0.44/–0.49
4.75		5.0	+0.44/–0.49
4.85		5.0	+0.44/–0.49
4.95		5.0	+0.44/–0.49
5.05		5.0	+0.44/–0.49
5.15		5.0	+0.44/–0.49
5.25		5.0	+0.44/–0.49
5.35		5.0	+0.44/–0.49
5.45		5.0	+0.44/–0.49
5.55		6.0	+0.44/–0.49
5.65		6.0	+0.44/–0.49
5.75		6.0	+0.44/–0.49
5.85		6.0	+0.44/–0.49
5.95		6.0	+0.44/–0.49
6.05		6.0	+0.44/–0.49
6.15		6.0	+0.44/–0.49
6.25		6.0	+0.44/–0.49
6.35		6.0	+0.44/–0.49
6.45		6.0	+0.44/–0.49

ManualsPlus.com

Table 8-41 Frequency Response, Band 2 (6.5 GHz to 13.2 GHz)

Source Frequency (GHz)	Agilent 8902A Reading (dB)	Pwr Sensor Cal Factor Frequency (GHz)	Measurement Uncertainty (dB)
6.5		6.0	+0.45/–0.50 dB
6.7		7.0	+0.45/–0.50 dB
6.9		7.0	+0.45/–0.50 dB
7.1		7.0	+0.45/–0.50 dB
7.3		7.0	+0.45/–0.50 dB
7.5		7.0	+0.45/–0.50 dB
7.7		8.0	+0.45/–0.50 dB
7.9		8.0	+0.45/–0.50 dB
8.1		8.0	+0.45/–0.50 dB
8.3		8.0	+0.45/–0.50 dB
8.5		8.0	+0.45/–0.50 dB
8.7		9.0	+0.45/–0.50 dB
8.9		9.0	+0.45/–0.50 dB
9.1		9.0	+0.45/–0.50 dB
9.3		9.0	+0.45/–0.50 dB
9.5		9.0	+0.45/–0.50 dB
9.7		10.0	+0.45/–0.50 dB
9.9		10.0	+0.45/–0.50 dB
10.1		10.0	+0.45/–0.50 dB
10.3		10.0	+0.45/–0.50 dB
10.5		10.0	+0.45/–0.50 dB
10.7		11.0	+0.45/–0.50 dB
10.9		11.0	+0.45/–0.50 dB
11.1		11.0	+0.45/–0.50 dB
11.3		11.0	+0.45/–0.50 dB
11.5		11.0	+0.45/–0.50 dB
11.7		12.0	+0.45/–0.50 dB
11.9		12.0	+0.45/–0.50 dB
12.1		12.0	+0.45/–0.50 dB
12.3		12.0	+0.45/–0.50 dB
12.5		12.0	+0.45/–0.50 dB
12.7		13.0	+0.45/–0.50 dB
12.9		13.0	+0.45/–0.50 dB
13.1		13.0	+0.45/–0.50 dB
13.2		13.0	+0.45/–0.50 dB

ManualsPlus.com

Table 8-42 Frequency Response, Band 3 (13.2 GHz to 26.5 GHz)

Source Frequency (GHz)	Agilent 8902A Reading (dB)	Pwr Sensor Cal Factor Frequency (GHz)	Measurement Uncertainty (dB)
13.25		13.0	+0.46/–0.51 dB
13.3		13.0	+0.46/–0.51 dB
13.5		13.0	+0.46/–0.51 dB
13.7		14.0	+0.46/–0.51 dB
13.9		14.0	+0.46/–0.51 dB
14.1		14.0	+0.46/–0.51 dB
14.3		14.0	+0.46/–0.51 dB
14.5		14.0	+0.46/–0.51 dB
14.7		15.0	+0.46/–0.51 dB
14.9		15.0	+0.46/–0.51 dB
15.1		15.0	+0.46/–0.51 dB
15.3		15.0	+0.46/–0.51 dB
15.5		15.0	+0.46/–0.51 dB
15.7		16.0	+0.46/–0.51 dB
15.9		16.0	+0.46/–0.51 dB
16.1		16.0	+0.46/–0.51 dB
16.3		16.0	+0.46/–0.51 dB
16.5		16.0	+0.46/–0.51 dB
16.7		17.0	+0.46/–0.51 dB
16.9		17.0	+0.46/–0.51 dB
17.1		17.0	+0.46/–0.51 dB
17.3		17.0	+0.46/–0.51 dB
17.5		17.0	+0.46/–0.51 dB
17.7		18.0	+0.46/–0.51 dB
17.9		18.0	+0.46/–0.51 dB
18.1		18.0	+0.46/–0.51 dB
18.3		18.0	+0.46/–0.51 dB
18.5		18.0	+0.46/–0.51 dB
18.7		19.0	+0.46/–0.51 dB
18.9		19.0	+0.46/–0.51 dB
19.1		19.0	+0.46/–0.51 dB
19.3		19.0	+0.46/–0.51 dB
19.5		19.0	+0.46/–0.51 dB
19.7		20.0	+0.46/–0.51 dB

ManualsPlus.com

Table 8-42 Frequency Response, Band 3 (13.2 GHz to 26.5 GHz)

Source Frequency (GHz)	Agilent 8902A Reading (dB)	Pwr Sensor Cal Factor Frequency (GHz)	Measurement Uncertainty (dB)
19.9		20.0	+0.51/–0.58
20.1		20.0	+0.51/–0.58
20.3		20.5	+0.51/–0.58
20.5		20.5	+0.51/–0.58
20.7		20.5	+0.51/–0.58
20.9		21.0	+0.51/–0.58
21.1		21.0	+0.51/–0.58
21.3		21.5	+0.51/–0.58
21.5		21.5	+0.51/–0.58
21.7		21.5	+0.51/–0.58
21.9		22.0	+0.51/–0.58
22.1		22.0	+0.51/–0.58
22.3		22.5	+0.51/–0.58
22.5		22.5	+0.51/–0.58
22.7		22.5	+0.51/–0.58
22.9		23.0	+0.51/–0.58
23.1		23.0	+0.51/–0.58
23.3		23.5	+0.51/–0.58
23.5		23.5	+0.51/–0.58
23.7		23.5	+0.51/–0.58
23.9		24.0	+0.51/–0.58
24.1		24.0	+0.51/–0.58
24.3		24.5	+0.51/–0.58
24.5		24.5	+0.51/–0.58
24.7		24.5	+0.51/–0.58
24.9		25.0	+0.51/–0.58
25.1		25.0	+0.51/–0.58
25.3		25.5	+0.51/–0.58
25.5		25.5	+0.51/–0.58
25.7		25.5	+0.51/–0.58
25.9		26.0	+0.51/–0.58
26.1		26.0	+0.51/–0.58
26.3		26.5	+0.51/–0.58
26.5		26.5	+0.51/–0.58

ManualsPlus.com

Table 8-43 Frequency Response (<250 kHz) (Option 006 Only)

Function Generator Frequency	ACDVM Amplitude (dBm)	Response Relative to 250 kHz	Response Relative to 300 MHz	Measurement Uncertainty (dB)
250 kHz		0 (Ref)		±0.23
100 kHz				±0.23
10 kHz				±0.23
1 kHz				±0.23
500 Hz				±0.23
200 Hz				±0.23

ManualsPlus.com

Table 8-44 Band Switching Uncertainty

	Band 0 Step 79c _____	Band 1 Step 80a _____	Band 2 Step 81a _____	Band 3 <19.8 GHz Step 82a _____	Band 3 >19.8 GHz Step 83a _____
Band 0 Step 79f _____	N/A	_____	_____	_____	_____
Band 1 Step 80b _____	_____	N/A	_____	_____	_____
Band 2 Step 81b _____	_____	_____	N/A	_____	_____
Band 3 <22 GHz Step 82b _____	_____	_____	_____	N/A	_____
Band 3 >22 GHz Step 83b _____	_____	_____	_____	_____	N/A

ManualsPlus.com

40a. Frequency Response: Agilent 8564E/EC

Instrument Under Test

Agilent 8564E/EC

Related Specification

Relative Frequency Response
Absolute Frequency Response
Band Switching Uncertainty

Related Adjustment

RYTHM Adjustment
Frequency Response Adjustment
LO Distribution Amplifier Adjustment
SBTX Adjustment

Description

For frequencies of 250 kHz and greater the output of a source is fed through a power splitter. One output of the power splitter is fed to a power sensor and then to a measuring receiver. The other output of the power splitter is fed to the spectrum analyzer. The source power level is adjusted at 300 MHz to place the displayed signal at the spectrum analyzer center horizontal graticule line. The measuring receiver, used as a power meter, is placed in ratio mode. At each new source frequency and spectrum analyzer center frequency, the source power level is adjusted to place the signal at the center horizontal graticule line. The measuring receiver displays the inverse of the frequency response relative to the calibrator.

For frequencies below 250 kHz the output of a function generator is fed through a power splitter to an ac digital volt meter (ACDVM) and to the spectrum analyzer. At each function generator frequency setting and spectrum analyzer center frequency setting, the function generator power level is adjusted to place the displayed signal at the spectrum analyzer center horizontal graticule line. The ACDVM is used to measure the function generator output signal level in dBm.

ManualsPlus.com

Figure 8-23 Frequency Response Test Setup, 250 kHz to 2.9 GHz

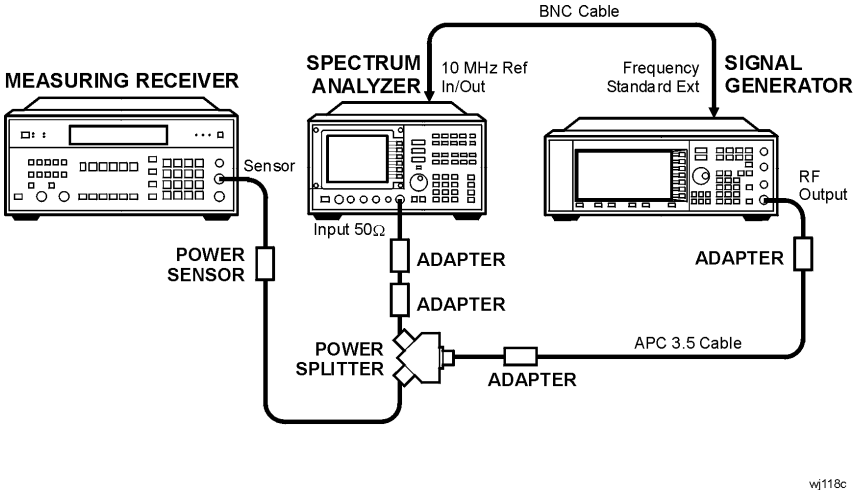

Figure 8-24 Frequency Response Test Setup, 2.9 MHz to 40 GHz

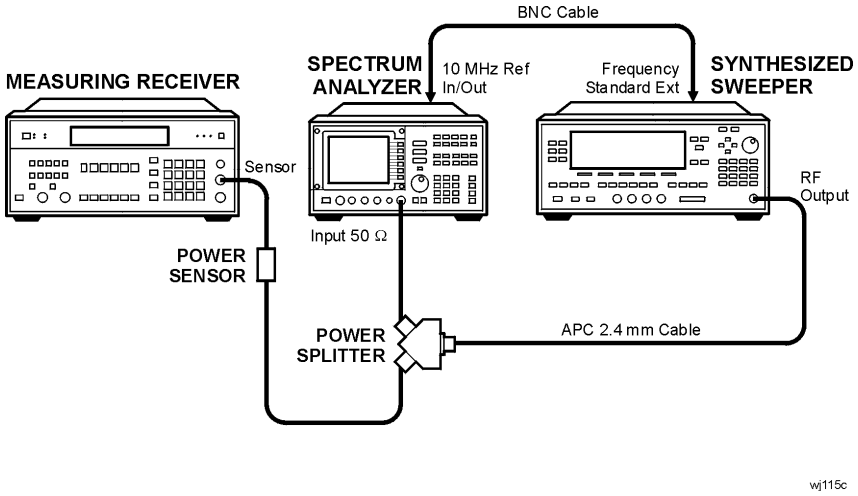

Figure 8-25 Frequency Response Test Setup, ≤250 kHz (Option 006, only)

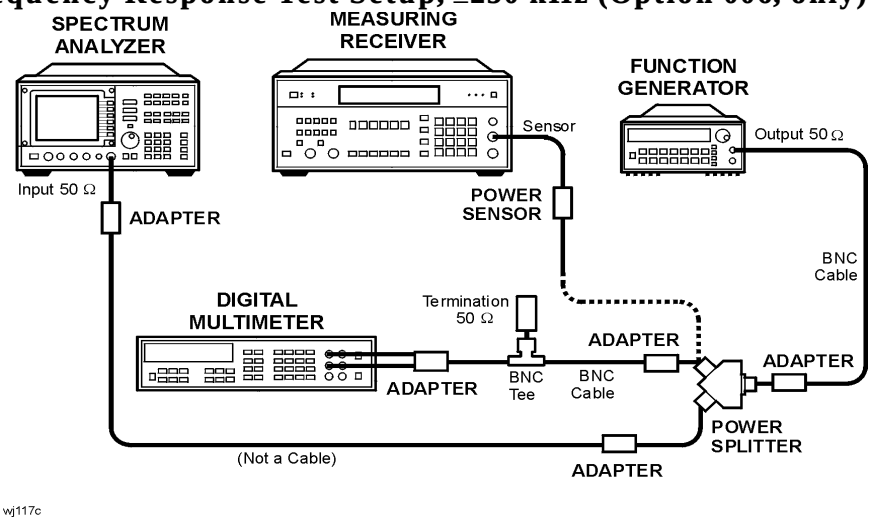

ManualsPlus.com

Equipment

Measuring receiver . . . . . Agilent 8902A

Synthesized sweeper . . . . . Agilent 83640B

Function Generator . . . . . Agilent 3324A or Agilent 33127A

Signal generator . . . . . Agilent E4421B

AC Digital Voltmeter . . . . . Agilent 3458A

Power sensor . . . . . Agilent 8482A

Power sensor . . . . . Agilent 8487A

Power splitter . . . . . Agilent 11667A

Power splitter . . . . . Agilent 11667C

Coaxial 50 Ω termination . . . . . Agilent 908A

Adapters

Type N (m) to type N (m) 1250-1475

Type N (m) to BNC (f) *(2 required)* 1250-1476

Type N (m) to APC 3.5 (f) *(2 required)* 1250-1744

Type N (f) to 2.4 mm (f) . . . . . Agilent 11903B

BNC (f) to Dual Banana Plug 1251-2816

BNC Tee 1250-0781

Cables

BNC, 122 cm (48 in) *(2 required)* . . . . . Agilent 10503A

APC-3.5, 91 cm (36 in) 8120-4921

APC-2.4, 91 cm (36 in) 8120-6164

DVM test leads . . . . . Agilent 34118A

Procedure

1. Zero and calibrate the Agilent 8902A and the Agilent 8482A in log mode, as described in the Agilent 8902A Operation Manual. Enter the power sensor 300 MHz calibration factor into the Agilent 8902A.
2. Connect the equipment as shown in Figure 8-23, using the Agilent 11667A power splitter.

ManualsPlus.com

3. On the Agilent E4421B, press **INSTR PRESET**. Set the controls as follows:

   CW frequency . . . . . 300 MHz

   Frequency increment . . . . . 100 MHz

   Amplitude . . . . . –4 dBm

4. On the spectrum analyzer, press **PRESET**. Press **RECALL**, **MORE 1 OF 2**, and **FACTORY PRSEL PK**. Set the controls as follows:

   Center frequency . . . . . 300 MHz

   Center frequency step . . . . . 100 MHz

   Span . . . . . 0 Hz

   Reference level . . . . . –5 dBm

   dB/division . . . . . 1 dB

   Resolution BW . . . . . 30 kHz

5. On the spectrum analyzer, press **MKR**.
6. On the Agilent E4421B, adjust the power level for a MKR amplitude of –10 dBm ±0.05 dB.
7. Press **RATIO** on the Agilent 8902A.

Frequency Response, Band 0 (250 kHz to 2.9 GHz)

8. Set the Agilent E4421B frequency to 250 kHz.
9. On the spectrum analyzer, press **FREQUENCY**, **CENTER FREQ**, 250, and **kHz**.
10. On the Agilent E4421B, adjust the power level for a spectrum analyzer MKR amplitude reading of –10 dBm ±0.05 dB.
11. Enter the 0.3 MHz power sensor calibration factor, indicated in Table 8-45, into the Agilent 8902A.
12. Record the negative of the power ratio displayed on the Agilent 8902A as the Agilent 8902A reading in Table 8-45. Record the power ratio here exactly as it is displayed on the Agilent 8902A:

    Agilent 8902A reading at 250 kHz:_____ dB

ManualsPlus.com

13. Set the Agilent E4421B to 1.0 MHz.
14. On the spectrum analyzer, press **FREQUENCY, CENTER FREQ**, 1.0, and **MHz**.
15. On the Agilent E4421B, adjust the power level for a spectrum analyzer MKR amplitude reading of –10 dBm ±0.05 dB.
16. Enter the 1.0 MHz power sensor calibration factor, indicated in Table 8-45, into the Agilent 8902A.
17. Record the negative of the power ratio displayed on the Agilent 8902A, as the Agilent 8902A reading in Table 8-45.
18. On the Agilent E4421B, set the frequency to the next value listed in Table 8-45.
19. On the spectrum analyzer, set the center frequency to the next value listed in Table 8-45.
20. On the Agilent E4421B, adjust the power level for a spectrum analyzer MKR amplitude reading of –10 dBm ±0.05 dB.
21. Enter the power sensor calibration factor, indicated in Table 8-45, into the Agilent 8902A.
22. Record the negative of the power ratio displayed on the Agilent 8902A, as the Agilent 8902A reading in Table 8-45.
23. To step through the remaining frequencies listed in Table 8-45, repeat step 18 through step 22.

NOTE It will be necessary to enter the last source and spectrum analyzer frequency, 2.9 GHz, manually; the step functions will set the frequency to 2.95 GHz.

Frequency Response, Band 1 (2.9 GHz to 6.5 GHz)

24. Connect the equipment as shown in Figure 8-24, using the Agilent 11667C power splitter.
25. Zero and calibrate the Agilent 8902A with the Agilent 8487A. Enter the power sensor 0.3 MHz calibration factor into the Agilent 8902A.
26. On the spectrum analyzer, press **FREQUENCY,** 2.95, and **GHz**.
27. Set the Agilent 83640B frequency to 2.95 GHz.
28. On the spectrum analyzer, press **AUX CTRL, INTERNAL MIXER**, and **PRESEL AUTO PK**. Wait for the PEAKING message to disappear.
29. On the Agilent 83640B, adjust the power level for a spectrum analyzer MKR amplitude reading of –10 dBm ±0.05 dB.

ManualsPlus.com

30. Enter the 3.0 GHz power sensor calibration factor, indicated in Table 8-46, into the Agilent 8902A.
31. Record the negative of the power ratio displayed on the Agilent 8902A as the Agilent 8902A reading in Table 8-46.
32. On the Agilent 83640B, set the frequency to the next value listed in Table 8-46.
33. On the spectrum analyzer, set the center frequency to the next value listed in Table 8-46.
34. On the Agilent 83640B, adjust the power level for a spectrum analyzer MKR amplitude reading of –10 dBm ±0.05 dB.
35. Enter the power sensor calibration factor, indicated in Table 8-46, into the Agilent 8902A.
36. Record the negative of the power ratio displayed on the Agilent 8902A as the Agilent 8902A reading in Table 8-46.
37. To step through the remaining frequencies listed in Table 8-46, repeat step 32 through step 36.

Frequency Response, Band 2 (6.5 GHz to 13.2 GHz)

38. On the spectrum analyzer, press **FREQUENCY,** 6.5, **GHz**, **CF STEP**, 200, and **MHz**.
39. Set the Agilent 83640B frequency to 6.5 GHz and the FREQ STEP to 200 MHz.
40. On the spectrum analyzer, press **AUX CTRL, INTERNAL MIXER**, and **PRESEL AUTO PK**. Wait for the PEAKING message to disappear.
41. On the Agilent 83640B, adjust the power level for a spectrum analyzer MKR amplitude reading of –10 dBm ±0.05 dB.
42. Enter the 6.0 GHz power sensor calibration factor, indicated in Table 8-47, into the Agilent 8902A.
43. Record the negative of the power ratio displayed on the Agilent 8902A as the Agilent 8902A reading in Table 8-47.
44. On the Agilent 83640B, set the frequency to the next value listed in Table 8-47.
45. On the spectrum analyzer, set the center frequency to the next value listed in Table 8-47.
46. On the Agilent 83640B, adjust the power level for a spectrum analyzer MKR amplitude reading of –10 dBm ±0.05 dB.

ManualsPlus.com

47. Enter the power sensor calibration factor, indicated in Table 8-47, into the Agilent 8902A.

48. Record the negative of the power ratio displayed on the Agilent 8902A as the HP 8902A reading in Table 8-47.

49. To step through the remaining frequencies listed in Table 8-47, repeat step 44 through step 48.

NOTE It will be necessary to enter the last source and spectrum analyzer frequency, 13.2 GHz, manually; the step functions will set the frequency to 13.3 GHz.

Frequency Response, Band 3 (13.2 GHz to 26.5 GHz)

50. On the spectrum analyzer, press **FREQUENCY,** 13.25, **GHz**.

51. Set the Agilent 83640B frequency to 13.25 GHz.

52. On the spectrum analyzer, press **AUX CTRL, INTERNAL MIXER**, and **PRESEL AUTO PK**. Wait for the PEAKING message to disappear.

53. On the Agilent 83640B, adjust the power level for a spectrum analyzer MKR amplitude reading of –10 dBm ±0.05 dB.

54. Enter the 14.0 GHz power sensor calibration factor, indicated in Table 8-48, into the Agilent 8902A.

55. Record the negative of the power ratio displayed on the Agilent 8902A as the Agilent 8902A reading in Table 8-48.

56. On the Agilent 83640B, set the frequency to the next value listed in Table 8-48.

57. On the spectrum analyzer, set the center frequency to the next value listed in Table 8-48.

58. On the Agilent 83640B, adjust the power level for a spectrum analyzer MKR amplitude reading of –10 dBm ±0.05 dB.

59. Enter the power sensor calibration factor, indicated in Table 8-48, into the Agilent 8902A.

60. Record the negative of the power ratio displayed on the Agilent 8902A as the Agilent 8902A reading in Table 8-48.

61. To step through the remaining frequencies listed in Table 8-48, repeat step 56 through step 60.

ManualsPlus.com

Frequency Response, Band 4 (26.9 GHz to 31.1 GHz)

62. On the spectrum analyzer, press **FREQUENCY,** 26.9, **GHz**.
63. Set the Agilent 83640B frequency to 26.9 GHz.
64. On the spectrum analyzer, press **AUX CTRL, INTERNAL MIXER**, and **PRESEL AUTO PK**. Wait for the PEAKING message to disappear.
65. On the Agilent 83640B, adjust the power level for a spectrum analyzer MKR amplitude reading of –10 dBm ±0.05 dB.
66. Enter the 27.0 GHz power sensor calibration factor, indicated in Table 8-49, into the Agilent 8902A.
67. Record the negative of the power ratio displayed on the Agilent 8902A as the Agilent 8902A reading in Table 8-49.
68. On the Agilent 83640B, set the frequency to the next value listed in Table 8-49.
69. On the spectrum analyzer, set the center frequency to the next value listed in Table 8-49.
70. On the Agilent 83640B, adjust the power level for a spectrum analyzer MKR amplitude reading of –10 dBm ±0.05 dB.
71. Enter the power sensor calibration factor, indicated in Table 8-49, into the Agilent 8902A.
72. Record the negative of the power ratio displayed on the Agilent 8902A as the Agilent 8902A reading in Table 8-49.
73. To step through the remaining frequencies listed in Table 8-49, repeat step 68 through step 72.

Frequency Response, Band 5 (31.2 GHz to 40.0 GHz)

74. On the spectrum analyzer, press **FREQUENCY,** 31.2, **GHz**.
75. Set the Agilent 83640B frequency to 31.2 GHz.
76. On the spectrum analyzer, press **AUX CTRL, INTERNAL MIXER**, and **PRESEL AUTO PK**. Wait for the PEAKING message to disappear.
77. On the Agilent 83640B, adjust the power level for a spectrum analyzer MKR amplitude reading of –10 dBm ±0.05 dB.
78. Enter the 31.0 GHz power sensor calibration factor, indicated in Table 8-50, into the Agilent 8902A.

ManualsPlus.com

79. Record the negative of the power ratio displayed on the Agilent 8902A as the Agilent 8902A reading in Table 8-50.

80. On the Agilent 83640B, set the frequency to the next value listed in Table 8-50.

81. On the spectrum analyzer, set the center frequency to the next value listed in Table 8-50.

82. On the Agilent 83640B, adjust the power level for a spectrum analyzer MKR amplitude reading of –10 dBm ±0.05 dB.

83. Enter the power sensor calibration factor, indicated in Table 8-50, into the Agilent 8902A.

84. Record the negative of the power ratio displayed on the Agilent 8902A as the Agilent 8902A reading in Table 8-50.

85. To step through the remaining frequencies listed in Table 8-50, repeat step 80 through step 84.

Frequency Response (≤250 kHz) (Option 006 Only)

86. On the spectrum analyzer, set the controls as follows:

Center frequency . . . . . 250 kHz

Span . . . . . 100 Hz

Resolution BW . . . . . 10 Hz

Marker . . . . . off

87. On the Agilent 3324A, set the controls as follows:

Frequency . . . . . 250 kHz

Amplitude . . . . . –4 dBm

Amplitude increment . . . . . .0.01 dB

88. On the Agilent 3458A, set the controls as follows:

Function . . . . . Sync AC Volts

Math . . . . . dBm

RES Register . . . . . 50 Ω

Front/Rear Terminal . . . . . Front

Resolution . . . . . 7.5 digits

ManualsPlus.com

89. Connect the equipment as shown in Figure 8-25 with the Agilent 8482A power sensor and Agilent 8902A connected to the Agilent 11667A power splitter.

90. Enter the power sensor calibration factor for 0.1 MHz into the Agilent 8902A.

91. Zero and calibrate the sensor.

92. Adjust the Agilent 3324A amplitude until the Agilent 8902A display reads the same value as recorded in step 12.

93. Disconnect the Agilent 8482A power sensor from the power splitter and connect the Agilent 3458A.

94. Record the Agilent 3458A reading here and in Table 8-51:

Agilent 3458A reading at 250 kHz: _____ dBm

95. On the spectrum analyzer, press **PEAK SEARCH** and **MARKER DELTA**.

96. Set the spectrum analyzer CENTER FREQ and the Agilent 3324A frequency to the next frequency listed in Table 8-51.

97. Press **PEAK SEARCH** on the spectrum analyzer.

98. Adjust the Agilent 3324A amplitude for a Δ MKR amplitude reading of 0.00 dBm ±0.05 dB.

99. Record the Agilent 3458A amplitude readings in Table 8-51 as the ACDMV amplitude.

100. To step through the remaining frequencies listed in Table 8-51, repeat step 96 through step 99.

101. For each of the frequencies listed in Table 8-51, subtract the “ACDVM amplitude” reading from the ACDVM reading at 250 kHz recorded in step 94. Record the results as the“ response relative to 250 kHz” in Table 8-51.

102. Add to each of the “response relative to 250 kHz” entries in Table 8-51 the “Agilent 8902A reading” for 250 kHz listed in Table 8-45. Record the results as the response relative to 300 MHz in Table 8-51.

ManualsPlus.com

Test Results

103. Frequency Response, Band 0 – 250 kHz to 2.9 GHz.

a. Enter the most positive number from Table 8-51, column 4. _____ dB

b. Enter the most positive number from Table 8-45, column 2. _____ dB

c. Of (a) and (b), enter whichever number is *more* positive. _____ dB

d. Enter the most negative number from Table 8-51, column 4. _____ dB

e. Enter the most negative number from Table 8-45, column 2. _____ dB

f. Of (d) and (e), enter whichever number is *more* negative. _____ dB

g. Subtract (f) from (c). _____ dB

104. Frequency Response, Band 1 – 2.9 GHz to 6.5 GHz.

a. Enter the most positive number from Table 8-46, column 2. _____ dB

b. Enter the most negative number from Table 8-46, column 2. _____ dB

c. Subtract (b) from (a). _____ dB

105. Frequency Response, Band 2 – 6.5 GHz to 13.2 GHz.

a. Enter the most positive number from Table 8-47, column 2. _____ dB

b. Enter the most negative number from Table 8-47, column 2. _____ dB

c. Subtract (b) from (a). _____ dB

ManualsPlus.com

106. Frequency Response, Band 3 – 13.2 GHz to 20.2 GHz

a. Enter the most positive number from Table 8-48, column 2 for center frequencies less than or equal to 22 GHz. _____ dB

b. Enter the most negative number from Table 8-48, column 2 for center frequencies less than or equal to 22 GHz. _____ dB

c. Subtract (b) from (a). _____ dB

107. Frequency Response, Band 3 – 22 GHz to 26.8 GHz

a. Enter the most positive number from Table 8-48, column 2 for center frequencies greater than 22 GHz. _____ dB

b. Enter the most negative number from Table 8-48, column 2 for center frequencies greater than 22 GHz. _____ dB

c. Subtract (b) from (a). _____ dB

108. Frequency Response, Band 3 – 13.2 GHz to 26.8 GHz

109. a. Enter the most positive number from step 106 (a) and step 107 (a). _____ dB

110. b. Enter the most negative number from step 106 (b) and step 107 (b). _____ dB

111. Frequency Response, Band 4 – 26.9 GHz to 31.1 GHz.

a. Enter the most positive number from Table 8-49, column 2. _____ dB

b. Enter the most negative number from Table 8-49, column 2. _____ dB

c. Subtract (b) from (a). _____ dB

112. Frequency Response, Band 5 – 31.2 GHz to 40 GHz.

a. Enter the most positive number from Table 8-50, column 2. _____ dB

b. Enter the most negative number from Table 8-50, column 2. _____ dB

c. Subtract (b) from (a). _____ dB

ManualsPlus.com

Frequency Response, Band 0, 100 MHz to 2.0 GHz

113. This step applies only to spectrum analyzers with serial number prefix 3641A or later. Enter the results of the frequency response, Band 0, for the frequency range 100 MHz to 2.0 GHz:

a. Enter the most positive number from Table 8-45, column 2, for center frequencies between 100 MHz and 2.0 GHz. _____ dB

b. Enter the most negative number from Table 8-45, column 2, for center frequencies between 100 MHz and 2.0 GHz. _____ dB

c. Subtract (b) from (a). _____ dB

Band Switching Uncertainty

114. In the top row of Table 8-52, enter the values recorded in the indicated steps. For example, if step 106 (a) has a value of 1.22 dB, enter “1.22 dB” in the top row of the Band 3 column.

115. In the left column of Table 8-52, enter the values recorded in the indicated steps. For example, if step 105 (b) has a value of –0.95 dB, enter “–0.95 dB” in the left column of the Band 2 row.

116. Compute the other entries in Table 8-52 by taking the absolute value of the difference between the values in the left column and the top row.

ManualsPlus.com

Table 8-45 Frequency Response, Band 0 (250 kHz to 2.9 GHz)

Source Frequency (MHz)	Agilent 8902A Reading (dB)	Pwr Sensor Cal Factor Frequency (MHz)	Measurement Uncertainty (dB)
0.250		0.01	+0.32/–0.34
1		1	+0.32/–0.34
10		10	+0.32/–0.34
20		10	+0.32/–0.34
50		30	+0.32/–0.34
150		100	+0.32/–0.34
250		300	+0.32/–0.34
350		300	+0.32/–0.34
450		300	+0.32/–0.34
550		300	+0.32/–0.34
650		1000	+0.32/–0.34
750		1000	+0.32/–0.34
850		1000	+0.32/–0.34
950		1000	+0.32/–0.34
1050		1000	+0.32/–0.34
1150		1000	+0.32/–0.34
1250		1000	+0.32/–0.34
1350		1000	+0.32/–0.34
1450		1000	+0.32/–0.34
1550		2000	+0.32/–0.34
1650		2000	+0.32/–0.34
1750		2000	+0.32/–0.34
1850		2000	+0.32/–0.34
1950		2000	+0.32/–0.34
2050		2000	+0.32/–0.34
2150		2000	+0.32/–0.34
2250		2000	+0.32/–0.34
2350		2000	+0.32/–0.34
2450		2000	+0.32/–0.34
2550		3000	+0.32/–0.34
2650		3000	+0.32/–0.34
2750		3000	+0.32/–0.34
2850		3000	+0.32/–0.34
2900		3000	+0.32/–0.34

ManualsPlus.com

Table 8-46 Frequency Response, Band 1 (2.9 GHz to 6.5 GHz)

Source Frequency (GHz)	Agilent 8902A Reading (dB)	Pwr Sensor Cal Factor Frequency (GHz)	Measurement Uncertainty (dB)
2.95		3.0	+0.44/–0.49
3.05		3.0	+0.44/–0.49
3.15		3.0	+0.44/–0.49
3.25		3.0	+0.44/–0.49
3.35		3.0	+0.44/–0.49
3.45		3.0	+0.44/–0.49
3.55		4.0	+0.44/–0.49
3.65		4.0	+0.44/–0.49
3.75		4.0	+0.44/–0.49
3.85		4.0	+0.44/–0.49
3.95		4.0	+0.44/–0.49
4.05		4.0	+0.44/–0.49
4.15		4.0	+0.44/–0.49
4.25		4.0	+0.44/–0.49
4.35		4.0	+0.44/–0.49
4.45		4.0	+0.44/–0.49
4.55		5.0	+0.44/–0.49
4.65		5.0	+0.44/–0.49
4.75		5.0	+0.44/–0.49
4.85		5.0	+0.44/–0.49
4.95		5.0	+0.44/–0.49
5.05		5.0	+0.44/–0.49
5.15		5.0	+0.44/–0.49
5.25		5.0	+0.44/–0.49
5.35		5.0	+0.44/–0.49
5.45		5.0	+0.44/–0.49
5.55		6.0	+0.44/–0.49
5.65		6.0	+0.44/–0.49
5.75		6.0	+0.44/–0.49
5.85		6.0	+0.44/–0.49
5.95		6.0	+0.44/–0.49
6.05		6.0	+0.44/–0.49
6.15		6.0	+0.44/–0.49
6.25		6.0	+0.44/–0.49
6.35		6.0	+0.44/–0.49
6.45		6.0	+0.44/–0.49

ManualsPlus.com

Table 8-47 Frequency Response, Band 2 (6.5 GHz to 13.2 GHz)

Source Frequency (GHz)	Agilent 8902A Reading (dB)	Pwr Sensor Cal Factor Frequency (GHz)	Measurement Uncertainty (dB)
6.5		6.0	+0.45/–0.50 dB
6.7		7.0	+0.45/–0.50 dB
6.9		7.0	+0.45/–0.50 dB
7.1		7.0	+0.45/–0.50 dB
7.3		7.0	+0.45/–0.50 dB
7.5		7.0	+0.45/–0.50 dB
7.7		8.0	+0.45/–0.50 dB
7.9		8.0	+0.45/–0.50 dB
8.1		8.0	+0.45/–0.50 dB
8.3		8.0	+0.45/–0.50 dB
8.5		8.0	+0.45/–0.50 dB
8.7		9.0	+0.45/–0.50 dB
8.9		9.0	+0.45/–0.50 dB
9.1		9.0	+0.45/–0.50 dB
9.3		9.0	+0.45/–0.50 dB
9.5		9.0	+0.45/–0.50 dB
9.7		10.0	+0.45/–0.50 dB
9.9		10.0	+0.45/–0.50 dB
10.1		10.0	+0.45/–0.50 dB
10.3		10.0	+0.45/–0.50 dB
10.5		10.0	+0.45/–0.50 dB
10.7		11.0	+0.45/–0.50 dB
10.9		11.0	+0.45/–0.50 dB
11.1		11.0	+0.45/–0.50 dB
11.3		11.0	+0.45/–0.50 dB
11.5		11.0	+0.45/–0.50 dB
11.7		12.0	+0.45/–0.50 dB
11.9		12.0	+0.45/–0.50 dB
12.1		12.0	+0.45/–0.50 dB
12.3		12.0	+0.45/–0.50 dB
12.5		12.0	+0.45/–0.50 dB
12.7		13.0	+0.45/–0.50 dB
12.9		13.0	+0.45/–0.50 dB
13.1		13.0	+0.45/–0.50 dB
13.2		13.0	+0.45/–0.50 dB

ManualsPlus.com

Table 8-48 Frequency Response, Band 3(13.2 GHz to 26.8 GHz)

Source Frequency (GHz)	Agilent 8902A Reading (dB)	Pwr Sensor Cal Factor Frequency (GHz)	Measurement Uncertainty (dB)
13.25		14.0	+0.53/–0.60
13.4		14.0	+0.53/–0.60
13.6		14.0	+0.53/–0.60
13.8		14.0	+0.53/–0.60
14.0		14.0	+0.53/–0.60
14.2		14.0	+0.53/–0.60
14.4		14.0	+0.53/–0.60
14.6		14.0	+0.53/–0.60
14.8		14.0	+0.53/–0.60
15.0		14.0	+0.53/–0.60
15.2		16.0	+0.53/–0.60
15.4		16.0	+0.53/–0.60
15.6		16.0	+0.53/–0.60
15.8		16.0	+0.53/–0.60
16.0		16.0	+0.53/–0.60
16.2		16.0	+0.53/–0.60
16.4		16.0	+0.53/–0.60
16.6		16.0	+0.53/–0.60
16.8		16.0	+0.53/–0.60
17.0		16.0	+0.53/–0.60
17.2		18.0	+0.53/–0.60
17.4		18.0	+0.53/–0.60
17.6		18.0	+0.53/–0.60
17.8		18.0	+0.53/–0.60
18.0		18.0	+0.53/–0.60
18.2		18.0	+0.53/–0.60
18.4		18.0	+0.53/–0.60
18.6		18.0	+0.53/–0.60
18.8		18.0	+0.53/–0.60
19.0		18.0	+0.53/–0.60
19.2		20.0	+0.53/–0.60
19.4		20.0	+0.53/–0.60
19.6		20.0	+0.53/–0.60
19.8		20.0	+0.53/–0.60
20.0		20.0	+0.53/–0.60
20.2		20.0	+0.53/–0.60

ManualsPlus.com

Table 8-48 Frequency Response, Band 3(13.2 GHz to 26.8 GHz) (Continued)

Source Frequency (GHz)	Agilent 8902A Reading (dB)	Pwr Sensor Cal Factor Frequency (GHz)	Measurement Uncertainty (dB)
20.4		20.0	+0.53/–0.60
20.6		20.0	+0.53/–0.60
20.8		20.0	+0.53/–0.60
21.0		20.0	+0.53/–0.60
21.2		21.0	+0.53/–0.60
21.4		21.0	+0.53/–0.60
21.6		21.0	+0.53/–0.60
21.8		21.0	+0.53/–0.60
22.0		22.0	+0.53/–0.60
22.2		22.0	+0.53/–0.60
22.4		22.0	+0.53/–0.60
22.6		22.0	+0.53/–0.60
22.8		22.0	+0.53/–0.60
23.0		22.0	+0.53/–0.60
23.2		24.0	+0.53/–0.60
23.4		24.0	+0.53/–0.60
23.6		24.0	+0.53/–0.60
23.8		24.0	+0.53/–0.60
24.0		24.0	+0.53/–0.60
24.2		24.0	+0.53/–0.60
24.4		24.0	+0.53/–0.60
24.6		24.0	+0.53/–0.60
24.8		24.0	+0.53/–0.60
25.0		24.0	+0.53/–0.60
25.2		26.0	+0.53/–0.60
25.4		26.0	+0.53/–0.60
25.6		26.0	+0.53/–0.60
25.8		26.0	+0.53/–0.60
26.0		26.0	+0.53/–0.60
26.2		26.0	+0.53/–0.60
26.4		26.5	+0.53/–0.60
26.6		26.5	+0.53/–0.60
26.8		27.0	+0.53/–0.60

ManualsPlus.com

Table 8-49 Frequency Response, Band 4 (26.9 GHz to 31.1 GHz)

Source Frequency (GHz)	Agilent 8902A Reading (dB)	Pwr Sensor Cal Factor Frequency (GHz)	Measurement Uncertainty (dB)
26.9		27.0	+0.74/–0.89
27.2		27.0	+0.74/–0.89
27.5		28.0	+0.74/–0.89
27.8		28.0	+0.74/–0.89
28.1		28.0	+0.74/–0.89
28.4		28.0	+0.74/–0.89
28.7		29.0	+0.74/–0.89
29.0		29.0	+0.74/–0.89
29.3		29.0	+0.74/–0.89
29.6		30.0	+0.74/–0.89
29.9		30.0	+0.74/–0.89
30.2		30.0	+0.74/–0.89
30.5		31.0	+0.74/–0.89
30.8		31.0	+0.74/–0.89
31.1		31.0	+0.74/–0.89

ManualsPlus.com

Table 8-50 Frequency Response, Band 5 (31.2 GHz to 40.0 GHz)

Source Frequency (GHz)	Agilent 8902A Reading (dB)	Pwr Sensor Cal Factor Frequency (GHz)	Measurement Uncertainty (dB)
31.2		31.0	+0.74/–0.89
31.6		32.0	+0.74/–0.89
32.0		32.0	+0.74/–0.89
32.4		32.0	+0.74/–0.89
32.8		33.0	+0.74/–0.89
33.2		33.0	+0.74/–0.89
33.6		34.0	+0.74/–0.89
34.0		34.0	+0.74/–0.89
34.4		34.0	+0.74/–0.89
34.8		35.0	+0.74/–0.89
35.2		35.0	+0.74/–0.89
35.6		36.0	+0.74/–0.89
36.0		36.0	+0.74/–0.89
36.4		36.0	+0.74/–0.89
36.8		37.0	+0.74/–0.89
37.2		37.0	+0.74/–0.89
37.6		38.0	+0.74/–0.89
38.0		38.0	+0.74/–0.89
38.4		38.0	+0.74/–0.89
38.8		39.0	+0.74/–0.89
39.2		39.0	+0.74/–0.89
39.6		40.0	+0.74/–0.89
40.0		40.0	+0.74/–0.89

ManualsPlus.com

Table 8-51 Frequency Response (<250 kHz) (Option 006 Only)

Function Generator Frequency	ACDVM Amplitude (dBm)	Response Relative to 250 kHz	Response Relative to 300 MHz	Measurement Uncertainty (dB)
250 kHz		0 (Ref)		±0.23
100 kHz				±0.23
10 kHz				±0.23
1 kHz				±0.23
500 Hz				±0.23
200 Hz				±0.23

ManualsPlus.com

Table 8-52 Band Switching Uncertainty

	Band 0 **Step 103c** _____	**Band 1** **Step 104a** _____	**Band 2** **Step 105a** _____	**Band 3 <22 GHz** **Step 106a** _____	**Band 3 >22 GHz** **Step 107a** _____	**Band 4** **Step 111a** _____	**Band 5** **Step 112a** _____
Band 0 Step 103f _____	N/A	_____	_____	_____	_____	_____	_____
Band 1 Step 104b _____	_____	N/A	_____	_____	_____	_____	_____
Band 2 Step 105b _____	_____	_____	N/A	_____	_____	_____	_____
Band 3 <22 GHz Step 106b _____	_____	_____	_____	N/A	_____	_____	_____
Band 3 >22 GHz Step 107b _____	_____	_____	_____	_____	N/A	_____	_____
Band 4 Step 111b _____	_____	_____	_____	_____	_____	N/A	_____
Band 5 Step 112b _____	_____	_____	_____	_____	_____	_____	N/A

ManualsPlus.com

41a. Frequency Response: Agilent 8565E/EC

Instrument Under Test

Agilent 8565E/EC

Related Specification

Relative Frequency Response
Absolute Frequency Response
Band Switching Uncertainty

Related Adjustment

RYTHM Adjustment
Frequency Response Adjustment
LO Distribution Amplifier Adjustment
SBTX Adjustment

Description

For frequencies of 250 kHz and greater the output of a source is fed through a power splitter. One output of the power splitter is fed to a power sensor and then to a measuring receiver. The other output of the power splitter is fed to the spectrum analyzer. The source power level is adjusted at 300 MHz to place the displayed signal at the spectrum analyzer center horizontal graticule line. The measuring receiver, used as a power meter, is placed in ratio mode. At each new source frequency and spectrum analyzer center frequency, the source power level is adjusted to place the signal at the center horizontal graticule line. The measuring receiver displays the inverse of the frequency response relative to the calibrator.

For frequencies below 250 kHz the output of a function generator is fed through a power splitter to an ac digital volt meter (ACDVM) and to the spectrum analyzer. At each function generator frequency setting and spectrum analyzer center frequency setting, the function generator power level is adjusted to place the displayed signal at the spectrum analyzer center horizontal graticule line. The ACDVM is used to measure the function generator output signal level in dBm.

ManualsPlus.com

Figure 8-26 Frequency Response Test Setup, 250 kHz to 2.9 GHz

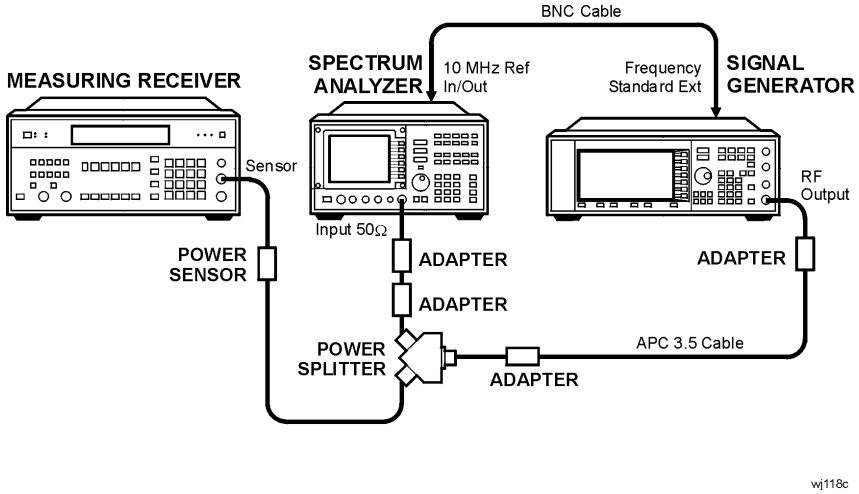

Figure 8-27 Frequency Response Test Setup, 2.9 MHz to 50 GHz

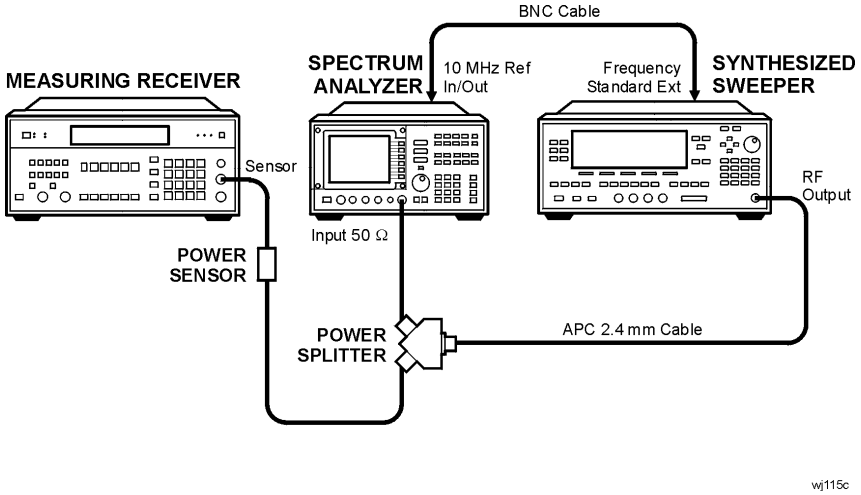

Figure 8-28 Frequency Response Test Setup, ≤250 kHz (Option 006, only)

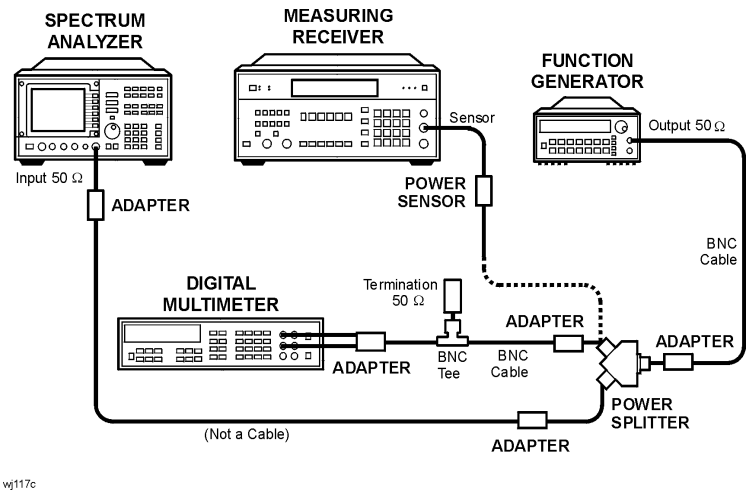

ManualsPlus.com

Equipment

Measuring receiver . . . . . .Agilent 8902A

Synthesized sweeper . . . . . .Agilent 83650B

Function Generator . . . . . Agilent 3324A or Agilent 33127A

Signal generator. . . . . Agilent E4421B

AC Digital Voltmeter . . . . . .Agilent 3458A

Power sensor. . . . . .Agilent 8482A

Power sensor. . . . . .Agilent 8487A

Power splitter . . . . . .Agilent 11667A

Power splitter . . . . . .Agilent 11667C

Coaxial 50 Ω termination . . . . . .Agilent 908A

Adapters

Type N (m) to type N (m). 1250-1475

Type N (m) to BNC (f) *(2 required)* 1250-1476

Type N (m) to APC 3.5 (f) *(2 required)* 1250-1744

Type N (f) to 2.4 mm (f) . . . . . Agilent 11903B

BNC (f) to Dual Banana Plug 1251-2816

BNC Tee 1250-0781

Cables

BNC, 122 cm (48 in) *(2 required)*. . . . . Agilent 10503A

APC-3.5, 91 cm (36 in) 8120-4921

2.4 mm, 91 cm (36 in) 8120-6164

DVM test leads. . . . . Agilent 34118A

Procedure

1. Zero and calibrate the Agilent 8902A and the Agilent 8482A in log mode, as described in the Agilent 8902A Operation Manual. Enter the power sensor 300 MHz calibration factor into the Agilent 8902A.
2. Connect the equipment as shown in Figure 8-26, using the Agilent 11667A power splitter.
3. On the Agilent E4421B, press **INSTR PRESET**. Set the controls as

ManualsPlus.com

follows:

CW frequency . . . . . 300 MHz

Frequency increment . . . . . 100 MHz

Amplitude . . . . . –4 dBm

4. On the spectrum analyzer, press **PRESET**. Press **RECALL**, **MORE 1 OF 2**, and **FACTORY PRSEL PK**. Set the controls as follows:

   Center frequency . . . . . 300 MHz

   Center frequency step . . . . . 100 MHz

   Span . . . . . 0 Hz

   Reference level . . . . . –5 dBm

   dB/division . . . . . 1 dB

   Resolution BW . . . . . 30 kHz

5. On the spectrum analyzer, press **MKR**.
6. On the Agilent E4421B, adjust the power level for a MKR amplitude of –10 dBm ±0.05 dB.
7. Press **RATIO** on the Agilent 8902A.

Frequency Response, Band 0 (250 kHz to 2.9 GHz)

8. Set the Agilent E4421B frequency to 250 kHz.
9. On the spectrum analyzer, press **FREQUENCY**, **CENTER FREQ**, 250, and **kHz**.
10. On the Agilent E4421B, adjust the power level for a spectrum analyzer MKR amplitude reading of –10 dBm ±0.05 dB.
11. Enter the 0.3 MHz power sensor calibration factor, indicated in Table 8-53, into the Agilent 8902A.
12. Record the negative of the power ratio displayed on the Agilent 8902A as the Agilent 8902A reading in Table 8-53. Record the power ratio here exactly as it is displayed on the Agilent 8902A:

    Agilent 8902A reading at 250 kHz:_____ dB

13. Set the Agilent E4421B to 1.0 MHz.
14. On the spectrum analyzer, press **FREQUENCY, CENTER FREQ**, 1.0, and **MHz**.

ManualsPlus.com

15. On the Agilent E4421B, adjust the power level for a spectrum analyzer MKR amplitude reading of –10 dBm ±0.05 dB.

16. Enter the 1.0 MHz power sensor calibration factor, indicated in Table 8-53, into the Agilent 8902A.

17. Record the negative of the power ratio displayed on the Agilent 8902A, as the Agilent 8902A reading in Table 8-53.

18. On the Agilent E4421B, set the frequency to the next value listed in Table 8-53.

19. On the spectrum analyzer, set the center frequency to the next value listed in Table 8-53.

20. On the Agilent E4421B, adjust the power level for a spectrum analyzer MKR amplitude reading of –10 dBm ±0.05 dB.

21. Enter the power sensor calibration factor, indicated in Table 8-53, into the Agilent 8902A.

22. Record the negative of the power ratio displayed on the Agilent 8902A, as the Agilent 8902A reading in Table 8-53.

23. To step through the remaining frequencies listed in Table 8-53, repeat step 18 through step 22.

NOTE It will be necessary to enter the last source and spectrum analyzer frequency, 2.9 GHz, manually; the step functions will set the frequency to 2.95 GHz.

Frequency Response, Band 1 (2.9 GHz to 6.5 GHz)

24. Connect the equipment as shown in Figure 8-27, using the Agilent 11667C power splitter.

25. Zero and calibrate the Agilent 8902A with the Agilent 8487A.

26. On the spectrum analyzer, press **FREQUENCY,** 2.95, and **GHz**.

27. Set the Agilent 83650B frequency to 2.95 GHz.

28. On the spectrum analyzer, press **AUX CTRL, INTERNAL MIXER**, and **PRESEL AUTO PK**. Wait for the PEAKING message to disappear.

29. On the Agilent 83650B, adjust the power level for a spectrum analyzer MKR amplitude reading of –10 dBm ±0.05 dB.

30. Enter the 2.0 GHz power sensor calibration factor, indicated in Table 8-54, into the Agilent 8902A.

ManualsPlus.com

31. Record the negative of the power ratio displayed on the Agilent 8902A as the Agilent 8902A reading in Table 8-54.
32. On the Agilent 83650B, set the frequency to the next value listed in Table 8-54.
33. On the spectrum analyzer, set the center frequency to the next value listed in Table 8-54.
34. On the Agilent 83650B, adjust the power level for a spectrum analyzer MKR amplitude reading of –10 dBm ±0.05 dB.
35. Enter the power sensor calibration factor, indicated in Table 8-54, into the Agilent 8902A.
36. Record the negative of the power ratio displayed on the Agilent 8902A as the Agilent 8902A reading in Table 8-54.
37. To step through the remaining frequencies listed in Table 8-54, repeat step 32 through step 36.

Frequency Response, Band 2 (6.5 GHz to 13.2 GHz)

38. On the spectrum analyzer, press **FREQUENCY,** 6.5, **GHz**, **CF STEP**, 200, and **MHz**.
39. Set the Agilent 83650B frequency to 6.5 GHz and the FREQ STEP to 200 MHz.
40. On the spectrum analyzer, press **AUX CTRL, INTERNAL MIXER**, and **PRESEL AUTO PK**. Wait for the PEAKING message to disappear.
41. On the Agilent 83650B, adjust the power level for a spectrum analyzer MKR amplitude reading of –10 dBm ±0.05 dB.
42. Enter the 6.0 GHz power sensor calibration factor, indicated in Table 8-55, into the Agilent 8902A.
43. Record the negative of the power ratio displayed on the Agilent 8902A as the Agilent 8902A reading in Table 8-55.
44. On the Agilent 83650B, to set the frequency to the next value listed in Table 8-55.
45. On the spectrum analyzer, set the center frequency to the next value listed in Table 8-55.
46. On the Agilent 83650B, adjust the power level for a spectrum analyzer MKR amplitude reading of –10 dBm ±0.05 dB.
47. Enter the power sensor calibration factor, indicated in Table 8-55, into the Agilent 8902A.
48. Record the negative of the power ratio displayed on the

ManualsPlus.com

Agilent 8902A as the Agilent 8902A reading in Table 8-55.

49. To step through the remaining frequencies listed in Table 8-55, repeat step 44 through step 48.

NOTE It will be necessary to enter the last source and spectrum analyzer frequency, 13.2 GHz, manually; the step functions will set the frequency to 13.3 GHz.

Frequency Response, Band 3 (13.2 GHz to 26.8 GHz)

50. On the spectrum analyzer, press **FREQUENCY,** 13.25, **GHz**.
51. Set the Agilent 83650B frequency to 13.25 GHz.
52. On the spectrum analyzer, press **AUX CTRL, INTERNAL MIXER**, and **PRESEL AUTO PK**. Wait for the PEAKING message to disappear.
53. On the Agilent 83650B, adjust the power level for a spectrum analyzer MKR amplitude reading of –10 dBm ±0.05 dB.
54. Enter the 13.0 GHz power sensor calibration factor, indicated in Table 8-56, into the Agilent 8902A.
55. Record the negative of the power ratio displayed on the Agilent 8902A as the Agilent 8902A reading in Table 8-56.
56. On the Agilent 83650B, set the frequency to the next value listed in Table 8-56.
57. On the spectrum analyzer, set the center frequency to the next value listed in Table 8-56.
58. On the Agilent 83650B, adjust the power level for a spectrum analyzer MKR amplitude reading of –10 dBm ±0.05 dB.
59. Enter the power sensor calibration factor, indicated in Table 8-56, into the Agilent 8902A.
60. Record the negative of the power ratio displayed on the Agilent 8902A as the Agilent 8902A reading in Table 8-56.
61. To step through the remaining frequencies listed in Table 8-56, repeat step 56 through step 60.

ManualsPlus.com

Frequency Response, Band 4 (26.9 GHz to 31.1 GHz)

62. On the spectrum analyzer, press **FREQUENCY,** 26.9, **GHz**.
63. Set the Agilent 83650B frequency to 26.9 GHz.
64. On the spectrum analyzer, press **AUX CTRL, INTERNAL MIXER**, and **PRESEL AUTO PK**. Wait for the PEAKING message to disappear.
65. On the Agilent 83650B, adjust the power level for a spectrum analyzer MKR amplitude reading of –10 dBm ±0.05 dB.
66. Enter the 27.0 GHz power sensor calibration factor, indicated in Table 8-57, into the Agilent 8902A.
67. Record the negative of the power ratio displayed on the Agilent 8902A as the Agilent 8902A reading in Table 8-57.
68. On the Agilent 83650B, set the frequency to the next value listed in Table 8-57.
69. On the spectrum analyzer, set the center frequency to the next value listed in Table 8-57.
70. On the Agilent 83650B, adjust the power level for a spectrum analyzer MKR amplitude reading of –10 dBm ±0.05 dB.
71. Enter the power sensor calibration factor, indicated in Table 8-57, into the Agilent 8902A.
72. Record the negative of the power ratio displayed on the Agilent 8902A as the Agilent 8902A reading in Table 8-57.
73. To step through the remaining frequencies listed in Table 8-57, repeat step 68 through step 72.

Frequency Response, Band 5 (31.2 GHz to 50.0 GHz)

74. On the spectrum analyzer, press **FREQUENCY,** 31.2, **GHz**.
75. Set the Agilent 83650B frequency to 31.2 GHz.
76. On the spectrum analyzer, press **AUX CTRL, INTERNAL MIXER**, and **PRESEL AUTO PK**. Wait for the PEAKING message to disappear.
77. On the Agilent 83650B, adjust the power level for a spectrum analyzer MKR amplitude reading of –10 dBm ±0.05 dB.
78. Enter the 31.0 GHz power sensor calibration factor, indicated in Table 8-57, into the Agilent 8902A.

ManualsPlus.com

79. Record the negative of the power ratio displayed on the Agilent 8902A as the Agilent 8902A reading in Table 8-27.

80. On the Agilent 83650B, set the frequency to the next value listed in Table 8-23.

81. On the spectrum analyzer, set the center frequency to the next value listed in Table 8-23.

82. On the Agilent 83650B, adjust the power level for a spectrum analyzer MKR amplitude reading of –10 dBm ±0.05 dB.

83. Enter the power sensor calibration factor, indicated in Table 8-23, into the Agilent 8902A.

84. Record the negative of the power ratio displayed on the Agilent 8902A as the Agilent 8902A reading in Table 8-27.

85. To step through the remaining frequencies listed in Table 8-27, repeat step 80 through step 84.

Frequency Response (≤250 kHz) (Option 006 Only)

86. On the spectrum analyzer, set the controls as follows:

Center frequency . . . . . 250 kHz

Span . . . . . 100 Hz

Resolution BW . . . . . 10 Hz

Marker . . . . . off

87. On the Agilent 3324A, set the controls as follows:

Frequency . . . . . 250 kHz

Amplitude . . . . . –4 dBm

Amplitude increment . . . . . 0.01 dB

88. On the Agilent 3458A, set the controls as follows:

Function . . . . . Sync AC Volts

Math . . . . . dBm

RES Register . . . . . 50 Ω

Front/Rear Terminal . . . . . Front

Resolution . . . . . 7.5 digits

89. Connect the equipment as shown in Figure 8-28 with the Agilent 8482A power sensor and Agilent 8902A connected to the

ManualsPlus.com

Agilent 11667A power splitter.

90. Enter the power sensor calibration factor for 0.1 MHz into the Agilent 8902A.

91. Zero and calibrate the sensor.

92. Adjust the Agilent 3324A amplitude until the Agilent 8902A display reads the same value as recorded in step 12.

93. Disconnect the Agilent 8482A power sensor from the power splitter and connect the Agilent 3458A.

94. Record the Agilent 3458A reading here and in Table 8-59:

Agilent 3458A reading at 250 kHz: _____ dBm

95. On the spectrum analyzer, press **PEAK SEARCH** and **MARKER DELTA**.

96. Set the spectrum analyzer CENTER FREQ and the Agilent 3324A frequency to the next frequency listed in Table 8-59.

97. Press **PEAK SEARCH** on the spectrum analyzer.

98. Adjust the Agilent 3324A amplitude for a Δ MKR amplitude reading of 0.00 dBm ±0.05 dB.

99. Record the Agilent 3458A amplitude readings in Table 8-59 as the ACDMV amplitude.

100. To step through the remaining frequencies listed in Table 8-59, repeat step 96 through step 99.

101. For each of the frequencies listed in Table 8-59, subtract the ACDVM amplitude reading from the ACDVM amplitude reading at 250 kHz recorded in step 94. Record the results as the response relative to 250 kHz in Table 8-59.

102. Add to each of the response relative to 250 kHz entries in Table 8-59 the Agilent 8902A reading for 250 kHz listed in Table 8-53. Record the results as the response relative to 300 MHz in Table 8-59.

Test Results

103. Frequency Response, Band 0 – 250 kHz to 2.9 GHz.

a. Enter the most positive number from Table 8-59, column 4. _____ dB

b. Enter the most positive number from Table 8-53, column 2. _____ dB

ManualsPlus.com

c. Of (a) and (b), enter whichever number is *more* positive. _____ dB

d. Enter the most negative number from Table 8-59, column 4. _____ dB

e. Enter the most negative number from Table 8-53, column 2. _____ dB

f. Of (d) and (e), enter whichever number is *more* negative. _____ dB

g. Subtract (f) from (c). _____ dB

104. Frequency Response, Band 1 – 2.9 GHz to 6.5 GHz.

a. Enter the most positive number from Table 8-54, column 2. _____ dB

b. Enter the most negative number from Table 8-54, column 2. _____ dB

c. Subtract (b) from (a). _____ dB

105. Frequency Response, Band 2 – 6.5 GHz to 13.2 GHz.

a. Enter the most positive number from Table 8-55, column 2. _____ dB

b. Enter the most negative number from Table 8-55, column 2. _____ dB

c. Subtract (b) from (a). _____ dB

106. Frequency Response, Band 3 – 13.2 GHz to 20.2 GHz.

a. Enter the most positive number from Table 8-56, column 2 for center frequencies less than or equal to 22 GHz. _____ dB

b. Enter the most negative number from Table 8-56, column 2 for center frequencies less than or equal to 22 GHz. _____ dB

c. Subtract (b) from (a). _____ dB

ManualsPlus.com

107. Frequency Response, Band 3 – 20.4 GHz to 26.8 GHz.

a. Enter the most positive number from Table 8-56, column 2 for center frequencies greater than 22 GHz. _____ dB

b. Enter the most negative number from Table 8-56, column 2 for center frequencies greater than 22 GHz. _____ dB

c. Subtract (b) from (a). _____ dB

108. Frequency Response, Band 3 – 13.2 GHz to 26.8 GHz.

109. a. Enter the most positive number from step 106 69 (a) and step 107 (a). _____ dB

110. b. Enter the most negative number from step 106 (b) and step 107 (b). _____ dB

111. Frequency Response, Band 4 – 26.9 GHz to 31.1 GHz.

a. Enter the most positive number from Table 8-57, column 2. _____ dB

b. Enter the most negative number from Table 8-57, column 2. _____ dB

c. Subtract (b) from (a). _____ dB

112. Frequency Response, Band 5 – 31.2 GHz to 50.0 GHz.

a. Enter the most positive number from Table 8-58, column 2. _____ dB

b. Enter the most negative number from Table 8-58, column 2. _____ dB

c. Subtract (b) from (a). _____ dB

ManualsPlus.com

Frequency Response, Band 0, 100 MHz to 2.0 GHz

113. This step applies only to spectrum analyzers with serial number prefix 3641A or later. Enter the results of the frequency response, Band 0, for the frequency range 100 MHz to 2.0 GHz:

a. Enter the most positive number from Table 8-53, column 2, for center frequencies between 100 MHz and 2.0 GHz. _____ dB

b. Enter the most negative number from Table 8-53, column 2, for center frequencies between 100 MHz and 2.0 GHz. _____ dB

c. Subtract (b) from (a). _____ dB

Band Switching Uncertainty

114. In the top row of Table 8-60, enter the values recorded in the indicated steps. For example, if step 106 (a) has a value of 1.22 dB, enter “1.22 dB” in the top row of the Band 3 column.

115. In the left column of Table 8-60, enter the values recorded in the indicated steps. For example, if step 105 (b) has a value of –0.95 dB, enter “–0.95 dB” in the left column of the Band 2 row.

Compute the other entries in Table 8-60 by taking the absolute value of the difference between the values in the left column and the top row.

ManualsPlus.com

Table 8-53 Frequency Response, Band 0 (250 kHz to 2.9 GHz)

Source Frequency (MHz)	Agilent 8902A Reading (dB)	Pwr Sensor Cal Factor Frequency (MHz)	Measurement Uncertainty (dB)
0.250		0.01	+0.37/–0.41
1		1	+0.37/–0.41
10		10	+0.37/–0.41
20		10	+0.37/–0.41
50		30	+0.37/–0.41
150		100	+0.37/–0.41
250		300	+0.37/–0.41
350		300	+0.37/–0.41
450		300	+0.37/–0.41
550		300	+0.37/–0.41
650		1000	+0.37/–0.41
750		1000	+0.37/–0.41
850		1000	+0.37/–0.41
950		1000	+0.37/–0.41
1050		1000	+0.37/–0.41
1150		1000	+0.37/–0.41
1250		1000	+0.37/–0.41
1350		1000	+0.37/–0.41
1450		1000	+0.37/–0.41
1550		2000	+0.37/–0.41
1650		2000	+0.37/–0.41
1750		2000	+0.37/–0.41
1850		2000	+0.37/–0.41
1950		2000	+0.37/–0.41
2050		2000	+0.37/–0.41
2150		2000	+0.37/–0.41
2250		2000	+0.37/–0.41
2350		2000	+0.37/–0.41
2450		2000	+0.37/–0.41
2550		3000	+0.37/–0.41
2650		3000	+0.37/–0.41
2750		3000	+0.37/–0.41
2850		3000	+0.37/–0.41
2900		3000	+0.37/–0.41

ManualsPlus.com

Table 8-54 Frequency Response, Band 1 (2.9 GHz to 6.5 GHz)

Source Frequency (GHz)	Agilent 8902A Reading (dB)	Pwr Sensor Cal Factor Frequency (GHz)	Measurement Uncertainty (dB)
2.95		2.0	+0.49/–0.55
3.05		4.0	+0.49/–0.55
3.15		4.0	+0.49/–0.55
3.25		4.0	+0.49/–0.55
3.35		4.0	+0.49/–0.55
3.45		4.0	+0.49/–0.55
3.55		4.0	+0.49/–0.55
3.65		4.0	+0.49/–0.55
3.75		4.0	+0.49/–0.55
3.85		4.0	+0.49/–0.55
3.95		4.0	+0.49/–0.55
4.05		4.0	+0.49/–0.55
4.15		4.0	+0.49/–0.55
4.25		4.0	+0.49/–0.55
4.35		4.0	+0.49/–0.55
4.45		4.0	+0.49/–0.55
4.55		4.0	+0.49/–0.55
4.65		4.0	+0.49/–0.55
4.75		4.0	+0.49/–0.55
4.85		4.0	+0.49/–0.55
4.95		4.0	+0.49/–0.55
5.05		6.0	+0.49/–0.55
5.15		6.0	+0.49/–0.55
5.25		6.0	+0.49/–0.55
5.35		6.0	+0.49/–0.55
5.45		6.0	+0.49/–0.55
5.55		6.0	+0.49/–0.55
5.65		6.0	+0.49/–0.55
5.75		6.0	+0.49/–0.55
5.85		6.0	+0.49/–0.55
5.95		6.0	+0.49/–0.55
6.05		6.0	+0.49/–0.55
6.15		6.0	+0.49/–0.55
6.25		6.0	+0.49/–0.55
6.35		6.0	+0.49/–0.55
6.45		6.0	+0.49/–0.55

ManualsPlus.com

Table 8-55 Frequency Response, Band 2 (6.5 GHz to 13.2 GHz)

Source Frequency (GHz)	Agilent 8902A Reading (dB)	Pwr Sensor Cal Factor Frequency (GHz)	Measurement Uncertainty (dB)
6.5		6.0	+0.49/–0.56
6.7		6.0	+0.49/–0.56
6.9		6.0	+0.49/–0.56
7.1		8.0	+0.49/–0.56
7.3		8.0	+0.49/–0.56
7.5		8.0	+0.49/–0.56
7.7		8.0	+0.49/–0.56
7.9		8.0	+0.49/–0.56
8.1		8.0	+0.49/–0.56
8.3		8.0	+0.49/–0.56
8.5		8.0	+0.49/–0.56
8.7		8.0	+0.49/–0.56
8.9		8.0	+0.49/–0.56
9.1		10.0	+0.49/–0.56
9.3		10.0	+0.49/–0.56
9.5		10.0	+0.49/–0.56
9.7		10.0	+0.49/–0.56
9.9		10.0	+0.49/–0.56
10.1		10.0	+0.49/–0.56
10.3		10.0	+0.49/–0.56
10.5		10.0	+0.49/–0.56
10.7		10.0	+0.49/–0.56
10.9		10.0	+0.49/–0.56
11.1		12.0	+0.49/–0.56
11.3		12.0	+0.49/–0.56
11.5		12.0	+0.49/–0.56
11.7		12.0	+0.49/–0.56
11.9		12.0	+0.49/–0.56
12.1		12.0	+0.49/–0.56
12.3		12.0	+0.49/–0.56
12.5		12.0	+0.49/–0.56
12.7		12.0	+0.49/–0.56
12.9		12.0	+0.49/–0.56
13.1		14.0	+0.49/–0.56
13.2		14.0	+0.49/–0.56

ManualsPlus.com

Table 8-56 Frequency Response, Band 3 (13.2 GHz to 26.8 GHz)

Source Frequency (GHz)	Agilent 8902A Reading (dB)	Pwr Sensor Cal Factor Frequency (GHz)	Measurement Uncertainty (dB)
13.25		14.0	+0.53/–0.60
13.4		14.0	+0.53/–0.60
13.6		14.0	+0.53/–0.60
13.8		14.0	+0.53/–0.60
14.0		14.0	+0.53/–0.60
14.2		14.0	+0.53/–0.60
14.4		14.0	+0.53/–0.60
14.6		14.0	+0.53/–0.60
14.8		14.0	+0.53/–0.60
15.0		14.0	+0.53/–0.60
15.2		16.0	+0.53/–0.60
15.4		16.0	+0.53/–0.60
15.6		16.0	+0.53/–0.60
15.8		16.0	+0.53/–0.60
16.0		16.0	+0.53/–0.60
16.2		16.0	+0.53/–0.60
16.4		16.0	+0.53/–0.60
16.6		16.0	+0.53/–0.60
16.8		16.0	+0.53/–0.60
17.0		16.0	+0.53/–0.60
17.2		18.0	+0.53/–0.60
17.4		18.0	+0.53/–0.60
17.6		18.0	+0.53/–0.60
17.8		18.0	+0.53/–0.60
18.0		18.0	+0.53/–0.60
18.2		18.0	+0.53/–0.60
18.4		18.0	+0.53/–0.60
18.6		18.0	+0.53/–0.60
18.8		18.0	+0.53/–0.60
19.0		18.0	+0.53/–0.60
19.2		20.0	+0.53/–0.60
19.4		20.0	+0.53/–0.60
19.6		20.0	+0.53/–0.60
19.8		20.0	+0.53/–0.60
20.0		20.0	+0.53/–0.60
20.2		20.0	+0.53/–0.60

ManualsPlus.com

Table 8-56 Frequency Response, Band 3 (13.2 GHz to 26.8 GHz) (Continued)

Source Frequency (GHz)	Agilent 8902A Reading (dB)	Pwr Sensor Cal Factor Frequency (GHz)	Measurement Uncertainty (dB)
20.4		20.0	+0.53/–0.60
20.6		20.0	+0.53/–0.60
20.8		20.0	+0.53/–0.60
21.0		20.0	+0.53/–0.60
21.2		21.0	+0.53/–0.60
21.4		21.0	+0.53/–0.60
21.6		21.0	+0.53/–0.60
21.8		21.0	+0.53/–0.60
22.0		22.0	+0.53/–0.60
22.2		22.0	+0.53/–0.60
22.4		22.0	+0.53/–0.60
22.6		22.0	+0.53/–0.60
22.8		22.0	+0.53/–0.60
23.0		22.0	+0.53/–0.60
23.2		24.0	+0.53/–0.60
23.4		24.0	+0.53/–0.60
23.6		24.0	+0.53/–0.60
23.8		24.0	+0.53/–0.60
24.0		24.0	+0.53/–0.60
24.2		24.0	+0.53/–0.60
24.4		24.0	+0.53/–0.60
24.6		24.0	+0.53/–0.60
24.8		24.0	+0.53/–0.60
25.0		24.0	+0.53/–0.60
25.2		26.0	+0.53/–0.60
25.4		26.0	+0.53/–0.60
25.6		26.0	+0.53/–0.60
25.8		26.0	+0.53/–0.60
26.0		26.0	+0.53/–0.60
26.2		26.0	+0.53/–0.60
26.4		26.5	+0.53/–0.60
26.6		26.5	+0.53/–0.60
26.8		27.0	+0.53/–0.60

ManualsPlus.com

Table 8-57 Frequency Response, Band 4 (26.9 GHz to 31.1 GHz)

Source Frequency (GHz)	Agilent 8902A Reading (dB)	Pwr Sensor Cal Factor Frequency (GHz)	Measurement Uncertainty (dB)
26.9		27.0	+0.74/–0.89
27.2		27.0	+0.74/–0.89
27.5		28.0	+0.74/–0.89
27.8		28.0	+0.74/–0.89
28.1		28.0	+0.74/–0.89
28.4		28.0	+0.74/–0.89
28.7		29.0	+0.74/–0.89
29.0		29.0	+0.74/–0.89
29.3		29.0	+0.74/–0.89
29.6		30.0	+0.74/–0.89
29.9		30.0	+0.74/–0.89
30.2		30.0	+0.74/–0.89
30.5		31.0	+0.74/–0.89
30.8		31.0	+0.74/–0.89
31.1		31.0	+0.74/–0.89

ManualsPlus.com

Table 8-58 Frequency Response, Band 5 (31.2 GHz to 50.0 GHz)

Source Frequency (GHz)	Agilent 8902A Reading (dB)	Pwr Sensor Cal Factor Frequency (GHz)	Measurement Uncertainty (dB)
31.2		31.0	+0.74/–0.89
31.6		32.0	+0.74/–0.89
32.0		32.0	+0.74/–0.89
32.4		32.0	+0.74/–0.89
32.8		33.0	+0.74/–0.89
33.2		33.0	+0.74/–0.89
33.6		34.0	+0.74/–0.89
34.0		34.0	+0.74/–0.89
34.4		34.0	+0.74/–0.89
34.8		35.0	+0.74/–0.89
35.2		35.0	+0.74/–0.89
35.6		36.0	+0.74/–0.89
36.0		36.0	+0.74/–0.89
36.4		36.0	+0.74/–0.89
36.8		37.0	+0.74/–0.89
37.2		37.0	+0.74/–0.89
37.6		38.0	+0.74/–0.89
38.0		38.0	+0.74/–0.89
38.4		38.0	+0.74/–0.89
38.8		39.0	+0.74/–0.89
39.2		39.0	+0.74/–0.89
39.6		40.0	+0.74/–0.89
40.0		40.0	+0.74/–0.89
40.4		40.0	+0.74/–0.89
40.8		41.0	+0.74/–0.89
41.2		41.0	+0.74/–0.89
41.6		42.0	+0.74/–0.89
42.0		42.0	+0.74/–0.89
42.4		42.0	+0.74/–0.89
42.8		43.0	+0.74/–0.89
43.2		43.0	+0.74/–0.89
43.6		44.0	+0.74/–0.89
44.0		44.0	+0.74/–0.89
44.4		44.0	+0.74/–0.89

ManualsPlus.com

Table 8-58 Frequency Response, Band 5 (31.2 GHz to 50.0 GHz)

Source Frequency (GHz)	Agilent 8902A Reading (dB)	Pwr Sensor Cal Factor Frequency (GHz)	Measurement Uncertainty (dB)
44.8		45.0	+0.74/–0.89
45.2		45.0	+0.74/–0.89
45.6		46.0	+0.74/–0.89
46.0		46.0	+0.74/–0.89
46.4		46.0	+0.74/–0.89
46.8		47.0	+0.74/–0.89
47.2		47.0	+0.74/–0.89
47.6		48.0	+0.74/–0.89
48.0		48.0	+0.74/–0.89
48.4		48.0	+0.74/–0.89
48.8		49.0	+0.74/–0.89
49.2		49.0	+0.74/–0.89
49.6		50.0	+0.74/–0.89
50.0		50.0	+0.74/–0.89

Table 8-59 Frequency Response (<250 kHz) (Option 006 Only)

Function Generator Frequency	ACDVM Amplitude (dBm)	Response Relative to 250 kHz	Response Relative to 300 MHz	Measurement Uncertainty (dB)
250 kHz		0 (Ref)		±0.23
100 kHz				±0.23
10 kHz				±0.23
1 kHz				±0.23
500 Hz				±0.23
200 Hz				±0.23

ManualsPlus.com

Table 8-60 Band Switching Uncertainty

	Band 0 Step 103c _____	**Band 1** Step 104a _____	**Band 2** Step 105a _____	**Band 3 <22 GHz** Step 106a _____	**Band 3 >22 GHz** Step 107a _____	**Band 4** Step 111a _____	**Band 5** Step 112a _____
Band 0 Step 103f _____	N/A	_____	_____	_____	_____	_____	_____
Band 1 Step 104b _____	_____	N/A	_____	_____	_____	_____	_____
Band 2 Step 105b _____	_____	_____	N/A	_____	_____	_____	_____
Band 3 <22 GHz Step 106b _____	_____	_____	_____	N/A	_____	_____	_____
Band 3 >22 GHz Step 107b _____	_____	_____	_____	_____	N/A	_____	_____
Band 4 Step 111b _____	_____	_____	_____	_____	_____	N/A	_____
Band 5 Step 112b _____	_____	_____	_____	_____	_____	_____	N/A

ManualsPlus.com

43a. Third Order Intermodulation Distortion: 8560E/EC

Instrument Under Test

8560E/EC

Related Specification

Third Order Intermodulation Distortion

Related Adjustment

1st LO Distribution Amplifier Adjustment

Description

Two synthesized sources provide the signals required for measuring third order intermodulation distortion. A filter is used to attenuate the second harmonic of the signal closest to the distortion product being measured. The spectrum analyzer provides the 10 MHz reference for the synthesized sources.

ManualsPlus.com

Figure 8-29 Third Order Intermodulation Test Setup

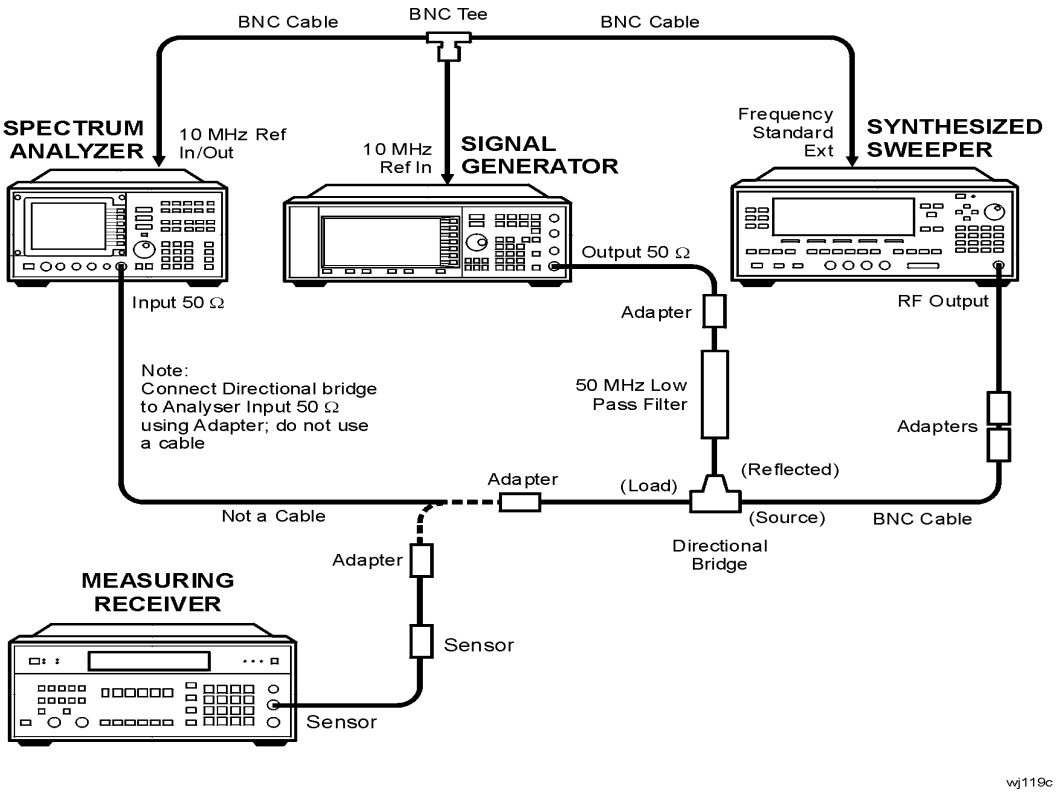

Equipment

Signal generator . . . . . Agilent E4421B

Synthesized sweeper . . . . . Agilent 83640B

Measuring receiver . . . . . Agilent 8902A

Power sensor . . . . . Agilent 8482A

Directional bridge . . . . . Agilent 8721A

50 MHz low-pass filter 0955-0306

Adapters

Type N (f) to APC 2.4 (f) . . . . . Agilent 11903B

Type N (m) to BNC (m) 1250-1473

Type N (m) to BNC (f) 1250-1476

Type N (f) to type N (f) 1250-1472

BNC tee (m) (f) (f) 1250-0781

Cable

BNC, 122 cm (48 in.) *(4 required)* Agilent 10503A

ManualsPlus.com

Procedure

1. Connect the equipment as shown in Figure 8-29, but do not connect the directional bridge to the spectrum analyzer.
2. Set the Agilent E4421B as follows:

   Frequency . . . . . 45 MHz

   Amplitude . . . . . –14 dB

   Amplitude increment . . . . . 0.04 dB

3. Press **PRESET** on the Agilent 83640B and set the controls as follows:

   CW frequency . . . . . 45.05 MHz

   Power level . . . . . –110 dBm

   Modulation . . . . . off

   RF power . . . . . off

   Frequency standard switch (rear panel) . . . . . EXT

4. On the Agilent 8902A, set the controls as follows:

   FUNCTION . . . . . RF POWER

   LOG/LIN . . . . . LOG

5. Press **PRESET** on the spectrum analyzer. Set the controls as follows:

   Center frequency . . . . . 45.0 MHz

   Center frequency step . . . . . 50 kHz

   Span . . . . . 1 kHz

   Reference level . . . . . –20 dBm

   Resolution BW . . . . . 10 Hz

6. Zero the Agilent 8902A/Agilent 8482A combination and calibrate the Agilent 8482A at 50 MHz as described in the Agilent 8902A Operation Manual.
7. Connect the power sensor to the output of the directional bridge using an adapter; do not use a cable.
8. Press **Amplitude** on the Agilent E4421B and use the increment ⇓ and ⇑ keys to adjust the amplitude for a –20 dBm ±0.1 dB reading on the Agilent 8902A display.
9. Disconnect the power sensor from the directional bridge. Connect the directional bridge directly to the spectrum analyzer input using an adapter, not a cable.

ManualsPlus.com

10. On the spectrum analyzer, press **PEAK SEARCH, MKR** →, and **MARKER** → **REF LVL**. Wait for completion of a new sweep. Press **MKR, MARKER DELTA**, **FREQUENCY**, and ⇑.

11. On the Agilent 83640B, press **RF, ON**, **POWER LEVEL,** –14, and **dBm**.

12. On the spectrum analyzer, press **PEAK SEARCH**.

13. On the Agilent 83640B, adjust the power level for a ΔMKR amplitude reading of 0 dB ±0.17 dB on the spectrum analyzer.

14. On the spectrum analyzer, press **MKR, MARKER NORMAL**, **PEAK SEARCH, MARKER DELTA**, **FREQUENCY,** ⇓, and ⇓. Wait for completion of a new sweep. Press **PEAK SEARCH**.

15. Record the spectrum analyzer ΔMKR amplitude reading below as the lower product suppression.

Lower product suppression _____ dBc

16. On the Agilent E4421B, press **FREQUENCY**, 45.05, and **MHz**.

17. On the Agilent 83640B, press **CW,** 45, and **MHz**.

18. On the spectrum analyzer, press **FREQUENCY,** ⇓, ⇓, and ⇓. Wait for completion of a new sweep. Press **PEAK SEARCH**.

19. Record the spectrum analyzer ΔMKR amplitude reading below as the upper product suppression.

Upper product suppression _____ dBc

20. Between the upper and lower product suppressions recorded in steps 15 and 19 above, record the more positive suppression as the third order intermodulation distortion.

Third order intermodulation distortion _____ dBc

ManualsPlus.com

44a. Third Order Intermodulation Distortion: Agilent 8561E/EC

Instrument Under Test

Agilent 8561E/EC

Related Specification

Third Order Intermodulation Distortion

Related Adjustment

1st LO Distribution Amplifier Adjustment

Description

Two synthesized sources provide the signals required for measuring third order intermodulation distortion. In the 30 Hz to 2.9 GHz band, a filter is used to attenuate the second harmonic of the signal closest to the distortion product being measured. A filter is not necessary in the preselected band. The spectrum analyzer provides the 10 MHz reference for the synthesized sources.

ManualsPlus.com

Figure 8-30 Third Order Intermodulation Test Setup (<2.9 GHz)

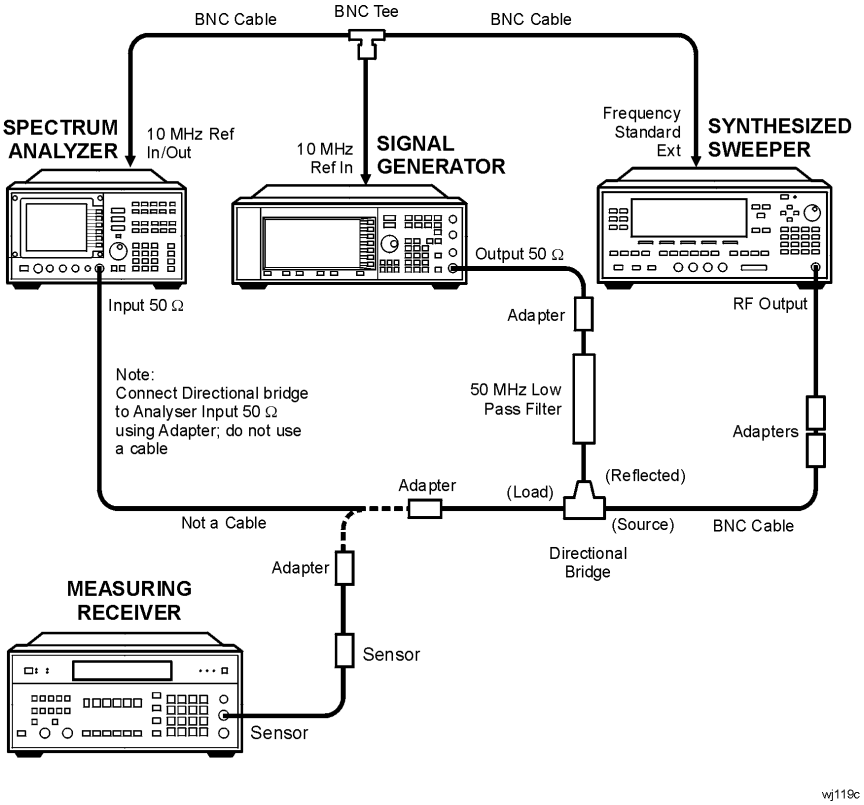

Figure 8-31 Third Order Intermodulation Test Setup (>2.9 GHz)

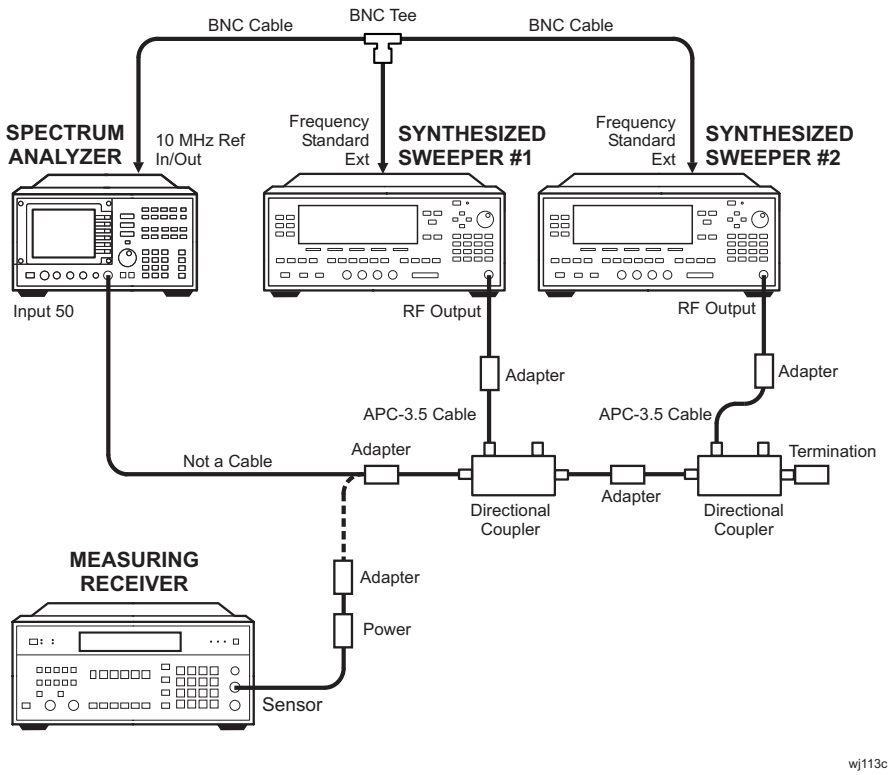

ManualsPlus.com

Equipment

Signal generator . . . . . Agilent E4421B

Synthesized sweeper *(2 required)* . . . . . Agilent 83640B

Measuring receiver . . . . . Agilent 8902A

Power sensor. . . . . Agilent 8481A

Directional bridge. . . . . Agilent 8721A

Directional coupler *(2 required)*. 0955-0098

50 MHz low-pass filter 0955-0306

50 Ω SMA termination. 1810-0118

Adapters

Type N (f) to APC 2.4mm (f) . . . . . Agilent 11903B

Type N (m) to BNC (m) *(2 required)* 1250-1473

Type N (m) to BNC (f) 1250-1476

Type N (f) to type N (f). 1250-1472

Type N (m) to APC 3.5 (m). 1250-1743

APC 3.5 (f) to APC 2.4mm (f) *(2 required)* . . . . . Agilent 11901B

SMA (m) to SMA (m) 1250-1159

BNC tee (m) (f) (f). 1250-0781

Cables

BNC, 122 cm (48 in.) *(4 required)* . . . . . Agilent 10503A

APC 3.5, 91 cm (36 in.) *(2 required)* 8120-4291

ManualsPlus.com

Procedure

Third Order Intermodulation (<2.9 GHz)

1. Connect the equipment as shown in Figure 8-30, but do not connect the directional bridge to the spectrum analyzer.

   Set the Agilent E4421B controls as follows:

   Frequency . . . . . 45 MHz

   Amplitude . . . . . –14 dB

   Amplitude increment . . . . . 0.04 dB

2. Press **INSTR PRESET** on the Agilent 83640B and set the controls as follows:

   CW frequency . . . . . 45.05 MHz

   Power level . . . . . –110 dBm

   Modulation . . . . . off

   RF power. . . . . off

   Frequency standard switch (rear panel). . . . . .EXT

3. On the Agilent 8902A, set the controls as follows:

   Function . . . . . RF power

   Log/linear . . . . . Log

4. Press **PRESET** on the spectrum analyzer. Set the controls as follows:

   Center frequency . . . . . 45.0 MHz

   Center frequency step . . . . . 50 kHz

   Span . . . . . 1 kHz

   Reference level . . . . . –20 dBm

   Resolution BW . . . . . 10 Hz

5. Zero the Agilent 8902A/Agilent 8482A combination and calibrate the Agilent 8482A at 50 MHz as described in the Agilent 8902A Operation Manual.

6. Connect the power sensor to the output of the directional bridge using an adapter; do not use a cable.

7. Press **Amplitude** on the Agilent E4421B and use the increment ⇓ and ⇑ keys to adjust the amplitude for a –20 dBm ±0.1 dB reading on the Agilent 8902A display.

ManualsPlus.com

8. Disconnect the power sensor from the directional bridge. Connect the directional bridge directly to the spectrum analyzer input using an adapter, not a cable.
9. On the spectrum analyzer, press **PEAK SEARCH, MKR** →, and **MARKER** → **REF LVL**. Wait for completion of a new sweep. Press **MKR, MARKER DELTA**, **FREQUENCY**, and ⇑.
10. On the Agilent 83640B, press **RF, ON**, **POWER LEVEL,** –14, and **dBm**.
11. On the spectrum analyzer, press **PEAK SEARCH**.
12. On the Agilent 83640B, adjust the power level for a ΔMKR amplitude reading of 0 dB ±0.17 dB on the spectrum analyzer.
13. On the spectrum analyzer, press **MKR, MARKER NORMAL**, **PEAK SEARCH, MARKER DELTA, FREQUENCY**, ⇓, and ⇓. Wait for completion of a new sweep. Press **PEAK SEARCH**.
14. Record the spectrum analyzer ΔMKR amplitude reading below as the lower product suppression.

    Lower product suppression_____ dBc

15. On the Agilent E4421B, press **FREQUENCY,** 45.05, and **MHz**.
16. On the Agilent 83640B, press **CW,** 45, and **MHz**.
17. On the spectrum analyzer, press **FREQUENCY**, ⇑, ⇑, and ⇑. Wait for completion of a new sweep. Press **PEAK SEARCH**.
18. Record the spectrum analyzer ΔMKR amplitude reading below as the upper product suppression.

    Upper product suppression _____ dBc

19. Between the upper and lower product suppressions recorded in steps 14 and 18 above, record the more positive suppression as the third order intermodulation distortion.

    Third order
    intermodulation distortion _____ dBc

Third Order Intermodulation (>2.9 GHz)

20. Connect the equipment as shown in Figure 8-31, but do not connect the directional coupler to the spectrum analyzer. The spectrum analyzer provides the 10 MHz reference to the synthesized sweepers.

ManualsPlus.com

21. On each Agilent 83640B, press **INSTR PRESET**. Set the controls as follows:

    Power level . . . . . 0 dBm

    Modulation . . . . . off

    RF power. . . . . off

    Frequency standard switch (Rear Panel) . . . . . .EXT

22. On Agilent 83640B #1, press **CW,** 5, and **GHz**.

23. On Agilent 83640B #2, press, **CW,** 5.00005, and **GHz**.

24. Enter the power sensor 5 GHz calibration factor into the Agilent 8902A.

25. On the spectrum analyzer, press **PRESET, RECALL, MORE 1 OF 2**, and **FACTORY PRSEL PK**. Set the controls as follows:

    Center frequency . . . . . .5.0 GHz

    Reference level . . . . . .–15 dBm

    Span . . . . . 10 kHz

    Center frequency step . . . . . 50 kHz

    Resolution BW . . . . . 300 Hz

    Video average . . . . . off

26. Connect the power sensor to the directional coupler using an adapter; do not use a cable.

27. On Agilent 83640B #1, press **RF**, **ON**, and **POWER LEVEL**. Adjust the power level for a –15 dBm ±0.1 dB reading on the Agilent 8902A display.

28. Disconnect the power sensor from the directional coupler. Connect the directional coupler to the spectrum analyzer INPUT 50 Ω using an adapter. Do not use a cable.

29. On the spectrum analyzer, press **PEAK SEARCH**, **AMPLITUDE**, **MORE 1 OF 3, MORE 2 OF 3**, and **PRESEL AUTO PK**. Wait for the PEAKING message to disappear. Press **SPAN,** 1, **kHz**, **BW**, 10, and **Hz**.

ManualsPlus.com

30. On the spectrum analyzer, press **PEAK SEARCH**, **MKR** →, and **MARKER** → **REF LVL**. Wait for completion of a new sweep. Press **MKR, MARKER DELTA**, **FREQUENCY,** and ⇑.

31. On Agilent 83640B #2, press **RF, ON**, and **POWER LEVEL**.

32. On the spectrum analyzer, press **PEAK SEARCH**.

33. On Agilent 83640B #2, adjust the power level for a ΔMKR amplitude reading of 0.0 dB ±0.17 dB on the spectrum analyzer.

34. On the spectrum analyzer, press **MKR, MARKER NORMAL**, **PEAK SEARCH**, **MARKER DELTA, FREQUENCY,** and ⇑. Press **BW, VID AVG ON,** 5, **Hz**, **TRACE,** and **CLEAR WRITE A**. Wait until VAVG 5 is displayed above the graticule.

35. Press **SGL SWP** and wait for completion of a new sweep. Press **PEAK SEARCH**. Record the spectrum analyzer ΔMKR amplitude reading below as the upper product suppression.

Upper product suppression _____ dBc

36. On the spectrum analyzer, press **FREQUENCY,** ⇓, ⇓, and ⇓. Press **TRIG, SWEEP CONT, TRACE,** and **CLEAR WRITE A**. Wait until VAVG 5 is displayed above the graticule.

37. Press **SGL SWP** and wait for completion of a new sweep. Press **PEAK SEARCH**. Record the spectrum analyzer ΔMKR amplitude reading below as the lower product suppression.

Lower product suppression_____ dBc

38. Between the upper and lower product suppressions recorded in steps 35 and 37 above, record the more positive suppression as the uncorrected third order intermodulation distortion.

Uncorrected third order
intermodulation distortion _____ dBc

39. The uncorrected third order intermodulation distortion represents the distortion with –25 dBm at the input mixer. The distortion products with –30 dBm at the input mixer will be 10 dB lower than the distortion products measured. Subtract 10 dB from the uncorrected third order intermodulation distortion and record the result as the corrected third order intermodulation distortion.

Corrected third order
intermodulation distortion _____ dBc

ManualsPlus.com

45a. Third Order Intermodulation Distortion: Agilent 8562E/EC, Agilent 8563E/EC

Instrument Under Test

Agilent 8562E/EC
Agilent 8563E/EC

Related Specification

Third Order Intermodulation Distortion

Related Adjustment

1st LO Distribution Amplifier Adjustment

Description

Two synthesized sources provide the signals required for measuring third order intermodulation distortion. In the 30 Hz to 2.9 GHz band, a filter is used to attenuate the second harmonic of the signal closest to the distortion product being measured. A filter is not necessary in the preselected bands. The spectrum analyzer provides the 10 MHz reference for the synthesized sources.

ManualsPlus.com

Figure 8-32 Third Order Intermodulation Test Setup (50 Hz to 2.9 GHz)

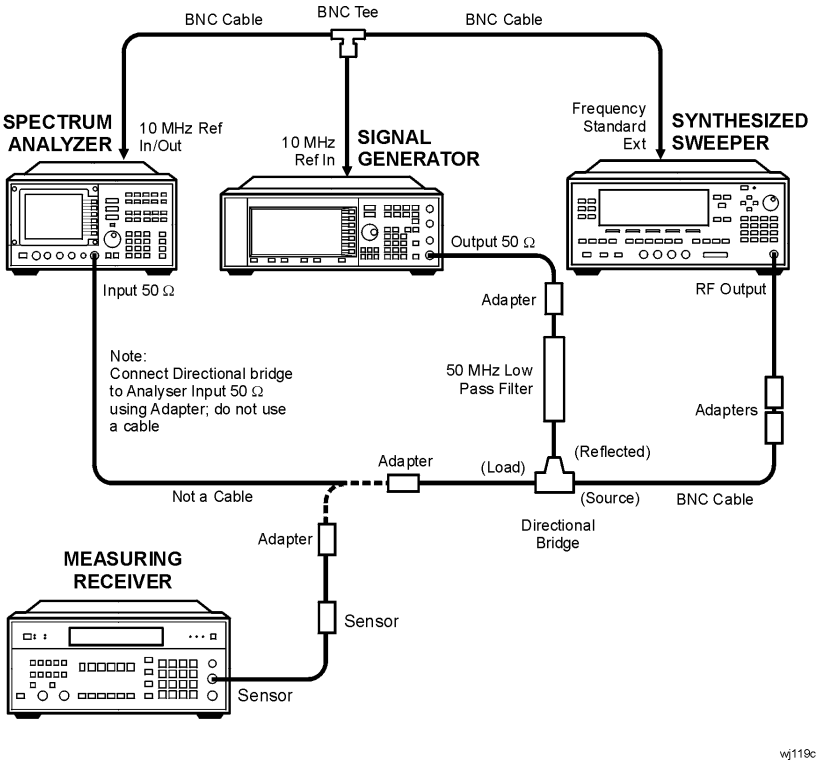

Figure 8-33 Third Order Intermodulation Test Setup (2.75 GHz to 6.5 GHz)

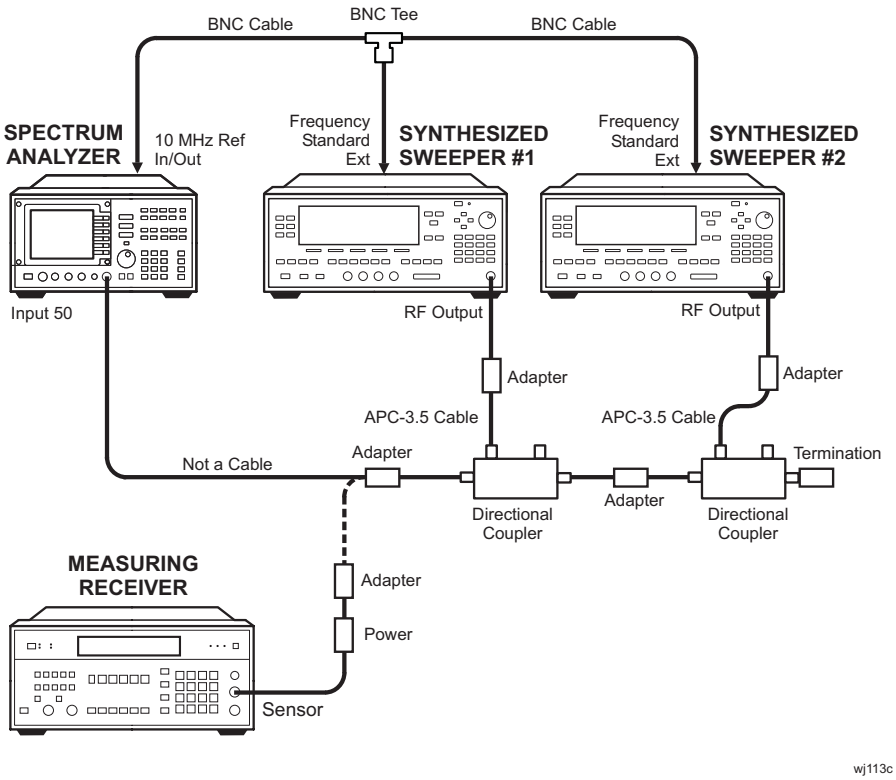

ManualsPlus.com

Equipment

Signal generator . . . . . Agilent E4421B

Synthesized sweeper *(2 required)*. . . . . Agilent 83640B

Measuring receiver . . . . . Agilent 8902A

Power sensor . . . . . Agilent 8481A

Directional bridge . . . . . Agilent 8721A

Directional coupler *(2 required)* 0955-0098

50 MHz low-pass filter 0955-0306

50 Ω SMA termination 1810-0118

Adapters

Type N (f) to APC 2.4 (f) . . . . . Agilent 11903B

Type N (m) to BNC (m). 1250-1473

Type N (f) to type N (f) 1250-1472

Type N (m) to BNC (f) 1250-1476

Type N (m) to APC 3.5 (m) 1250-1743

APC 3.5 (f) to APC 2.4 (f) *(2 required)* 5061-5311

SMA (m) to SMA (m). . . . . Agilent 11901B

BNC tee (m) (f) (f) 1250-0781

Cables

BNC, 122 cm (48 in.) *(4 required)*. . . . . Agilent 10503A

APC 3.5, 91 cm (36 in.) *(2 required)* 8120-4291

ManualsPlus.com

Procedure

Third Order Intermodulation (< 2.9 GHz)

1. Connect the equipment as shown in Figure 8-32, but do not connect the directional bridge to the spectrum analyzer.
2. Set the Agilent E4421B controls as follows:

   Frequency . . . . . 45 MHz

   Amplitude . . . . . –14 dBm

   Amplitude increment . . . . . .0.04 dB

3. Press **INSTR PRESET** on the Agilent 83640B and set the controls as follows:

   CW frequency . . . . . 45.05 MHz

   Power level . . . . . –110 dBm

   Modulation . . . . . off

   RF power . . . . . off

   Frequency standard switch (rear panel) . . . . . EXT

4. On the Agilent 8902A, set the controls as follows:

   Function . . . . . RF power

   Log/linear . . . . . Log

5. Press **PRESET** on the spectrum analyzer. Set the controls as follows:

   Center frequency . . . . . 45.0 MHz

   Center frequency step . . . . . 50 kHz

   Span . . . . . 1 kHz

   Reference level . . . . . –20 dBm

   Resolution BW . . . . . 10 Hz

6. Zero the Agilent 8902A/Agilent 8481A combination and calibrate the Agilent 8481A at 50 MHz as described in the Agilent 8902A Operation Manual.
7. Connect the power sensor to the output of the directional bridge using an adapter; do not use a cable.
8. Press **Amplitude** on the Agilent E4421B and use the increment ⇓ and ⇑ keys to adjust the amplitude for a –20 dBm ±0.1 dB reading on the Agilent 8902A display.

ManualsPlus.com

9. Disconnect the power sensor from the directional bridge. Connect the directional bridge directly to the spectrum analyzer input using an adapter, not a cable.
10. On the spectrum analyzer, press **PEAK SEARCH, MKR** →, and **MARKER** → **REF LVL**. Wait for completion of a new sweep. Press **MKR, MARKER DELTA**, **FREQUENCY**, and ⇑.
11. On the Agilent 83640B, press **RF**, **ON**, **POWER LEVEL,** –14, and **dBm**.
12. On the spectrum analyzer, press **PEAK SEARCH**.
13. On the Agilent 83640B, adjust the power level for a ΔMKR amplitude reading of 0 dB ±0.17 dB on the spectrum analyzer.
14. On the spectrum analyzer, press **MKR, MARKER NORMAL**, **PEAK SEARCH, MARKER DELTA, FREQUENCY**, ⇓, and ⇓. Wait for completion of a new sweep. Press **PEAK SEARCH**.
15. Record the spectrum analyzer ΔMKR amplitude reading below as the lower product suppression.

    Lower product suppression_____ dBc

16. On the Agilent E4421B, press **FREQUENCY,** 45.05, and **MHz**.
17. On the Agilent 83640B, press **CW,** 45, **MHz**.
18. On the spectrum analyzer, press **FREQUENCY,** ⇑, ⇑, and ⇑. Wait for completion of a new sweep. Press **PEAK SEARCH**.
19. Record the spectrum analyzer ΔMKR amplitude reading below as the upper product suppression.

    Upper product suppression_____ dBc

20. Between the upper and lower product suppressions recorded in steps 15 and 19 above, record the more positive suppression as the third order intermodulation distortion at 45 MHz.

    Third order
    intermodulation distortion, 45 MHz_____ dBc

Third Order Intermodulation (2.9 GHz to 6.46 GHz)

21. Connect the equipment as shown in Figure 8-33, but do not connect the directional coupler to the spectrum analyzer. The spectrum analyzer provides the 10 MHz reference to the synthesized sweepers.

ManualsPlus.com

22. On each Agilent 83640B, press **INSTR PRESET**. Set the controls as follows:

    Power level. . . . . 0 dBm

    Modulation. . . . . .off

    RF power . . . . . .off

    Frequency standard switch (Rear Panel). . . . . EXT

23. On Agilent 83640B #1, press **CW,** 5, and **GHz**.

24. On Agilent 83640B #2, press **CW,** 5.00005, and **GHz**.

25. Enter the power sensor 5 GHz calibration factor into the Agilent 8902A.

26. On the spectrum analyzer, press **PRESET**, **RECALL, MORE 1 OF 2**, and **FACTORY PRSEL PK**. Set the controls as follows:

    Center frequency . . . . . 5.0 GHz

    Reference level. . . . . –15 dBm

    Span . . . . . 10 kHz

    Center frequency step . . . . . 50 kHz

    Resolution BW. . . . . 300 Hz

    Video average . . . . . .off

27. Connect the power sensor to the directional coupler using an adapter; do not use a cable.

28. On Agilent 83640B #1, press **RF**, **ON**, and **POWER LEVEL**. Adjust the power level for a –15 dBm ±0.1 dB reading on the Agilent 8902A display.

29. Disconnect the power sensor from the directional coupler. Connect the directional coupler to the spectrum analyzer INPUT 50 Ω using an adapter. Do not use a cable.

30. On the spectrum analyzer, press **PEAK SEARCH, AMPLITUDE**, **MORE 1 OF 3**, **MORE 2 OF 3,** and **PRESEL AUTO PK**. Wait for the PEAKING message to disappear. Press **SPAN**, 1, **kHz**, **BW**, 10, and **Hz**.

31. On the spectrum analyzer, press **PEAK SEARCH, MKR** →, and **MARKER** → **REF LVL**. Wait for completion of a new sweep. Press **MKR, MARKER DELTA, FREQUENCY**, and ⇑.

32. On Agilent 83640B #2, press **RF, ON**, and **POWER LEVEL**.

33. On the spectrum analyzer, press **PEAK SEARCH**.

34. On Agilent 83640B #2, adjust the power level for a ΔMKR amplitude reading of 0.0 dB ±0.17 dB on the spectrum analyzer.

ManualsPlus.com

35. On the spectrum analyzer, press **MKR**, **MARKER NORMAL**, **PEAK SEARCH**, **MARKER DELTA, FREQUENCY,** and ⇑. Press **BW**, **VID AVG ON**, 5, **Hz**, **TRACE**, and **CLEAR WRITE A**. Wait until VAVG 5 is displayed above the graticule.

36. Press **SGL SWP** and wait for completion of a new sweep. Press **PEAK SEARCH**. Record the spectrum analyzer ΔMKR amplitude reading below as the upper product suppression.

Upper product suppression_____ dBc

37. On the spectrum analyzer, press **FREQUENCY,** ⇓, ⇓, and ⇓. Press **TRIG, SWEEP CONT**, **TRACE**, and **CLEAR WRITE A**. Wait until VAVG 5 is displayed above the graticule.

38. Press **SGL SWP** and wait for completion of a new sweep. Press **PEAK SEARCH**. Record the spectrum analyzer ΔMKR amplitude reading below as the lower product suppression.

Lower product suppression_____ dBc

39. Between the upper and lower product suppressions recorded in steps 36 and 38 above, record the more positive suppression as the uncorrected third order intermodulation distortion.

Uncorrected third order
intermodulation distortion _____ dBc

40. The uncorrected third order intermodulation distortion represents the distortion with –25 dBm at the input mixer. The distortion products with –30 dBm at the input mixer will be 10 dB lower than the distortion products measured. Subtract 10 dB from the uncorrected third order intermodulation distortion and record the result as the third order intermodulation distortion at 5 GHz.

Third order
intermodulation distortion, 5 GHz _____ dBc

ManualsPlus.com

Third Order Intermodulation (>6.46 GHz)

41. On Agilent 83640B #1, press **CW,** 8, **GHz**, **POWER LEVEL,** 0, **dBm, RF,** and **OFF**.

42. On Agilent 83640B #2, press **CW,** 8.00005, **GHz**, **POWER LEVEL,** 0, **dBm**, **RF,** and **OFF**.

43. Enter the power sensor 8 GHz calibration factor into the Agilent 8902A.

44. On the spectrum analyzer, press **PRESET, RECALL, MORE 1 OF 2**, and **FACTORY PRSEL PK**. Set the controls as follows:

    Center frequency . . . . . 8.0 GHz

    Reference level. . . . . –15 dBm

    Span . . . . . 10 kHz

    Center frequency step . . . . . 50 kHz

    Resolution BW . . . . . 300 Hz

    Video average . . . . . off

45. Disconnect the directional coupler from the spectrum analyzer. Connect the power sensor to the directional coupler using an adapter; do not use a cable.

46. On Agilent 83640B #1, press **RF, ON**, and **POWER LEVEL**. Adjust the power level for a –15 dBm ±0.1 dB reading on the Agilent 8902A display.

47. Disconnect the power sensor from the directional coupler. Connect the directional coupler to the spectrum analyzer INPUT 50 Ω using an adapter. Do not use a cable.

48. On the spectrum analyzer, press **PEAK SEARCH**, **AMPLITUDE**, **MORE 1 OF 3, MORE 2 OF 3,** and **PRESEL AUTO PK**. Wait for the PEAKING message to disappear. Press **SPAN,** 1, **kHz BW,** 10, and **Hz**.

49. On the spectrum analyzer, press **PEAK SEARCH, MKR** →, and **MARKER** → **REF LVL**. Wait for completion of a new sweep. Press **MKR, MARKER DELTA, FREQUENCY**, and ⇑.

50. On Agilent 83640B #2, press **RF, ON**, and **POWER LEVEL**.

51. On the spectrum analyzer, press **PEAK SEARCH**.

52. On Agilent 83640B #2, adjust the power level for a ΔMKR amplitude reading of 0.0 dB ±0.17 dB on the spectrum analyzer.

ManualsPlus.com

53. On the spectrum analyzer, press **MKR**, **MARKER NORMAL**, **PEAK SEARCH, MARKER DELTA**, **FREQUENCY**, and ⇑. Press **BW**, **VID AVG ON,** 5, **Hz**, **TRACE,** and **CLEAR WRITE A**. Wait until VAVG 5 is displayed above the graticule.

54. Press **SGL SWP** and wait for completion of a new sweep. Press **PEAK SEARCH**. Record the spectrum analyzer ΔMKR amplitude reading below as the upper product suppression.

Upper product suppression _____ dBc

55. On the spectrum analyzer, press **FREQUENCY,** ⇓, ⇓, and ⇓. Press **TRIG**, **SWEEP CONT, TRACE**, and **CLEAR WRITE A**. Wait until VAVG 5 is displayed above the graticule.

56. Press **SGL SWP** and wait for completion of a new sweep. Press **PEAK SEARCH**. Record the spectrum analyzer ΔMKR amplitude reading below as the lower product suppression.

Lower product suppression _____ dBc

57. Between the upper and lower product suppressions recorded in steps 54 and 56 above, record the more positive suppression as the uncorrected third order intermodulation distortion.

Uncorrected third order
intermodulation distortion _____ dBc

58. Subtract 10 dB from the uncorrected third order intermodulation distortion and record the result as the third order intermodulation distortion at 8 GHz.

Third order
intermodulation distortion, 8 GHz _____ dBc

ManualsPlus.com

46a. Third Order Intermodulation Distortion: Agilent 8564E/EC, Agilent 8565E/EC

Instrument Under Test

Agilent 8564E/EC
Agilent 8565E/EC

Related Specification

Third Order Intermodulation Distortion

Related Adjustment

1st LO Distribution Amplifier Adjustment

Description

Two synthesized sources provide the signals required for measuring third order intermodulation distortion. In the 30 Hz to 2.9 GHz band, a filter is used to attenuate the second harmonic of the signal closest to the distortion product being measured. A filter is not necessary in the preselected bands. The spectrum analyzer provides the 10 MHz reference for the synthesized sources.

ManualsPlus.com

Figure 8-34 Third Order Intermodulation Test Setup (50 Hz to 2.9 GHz)

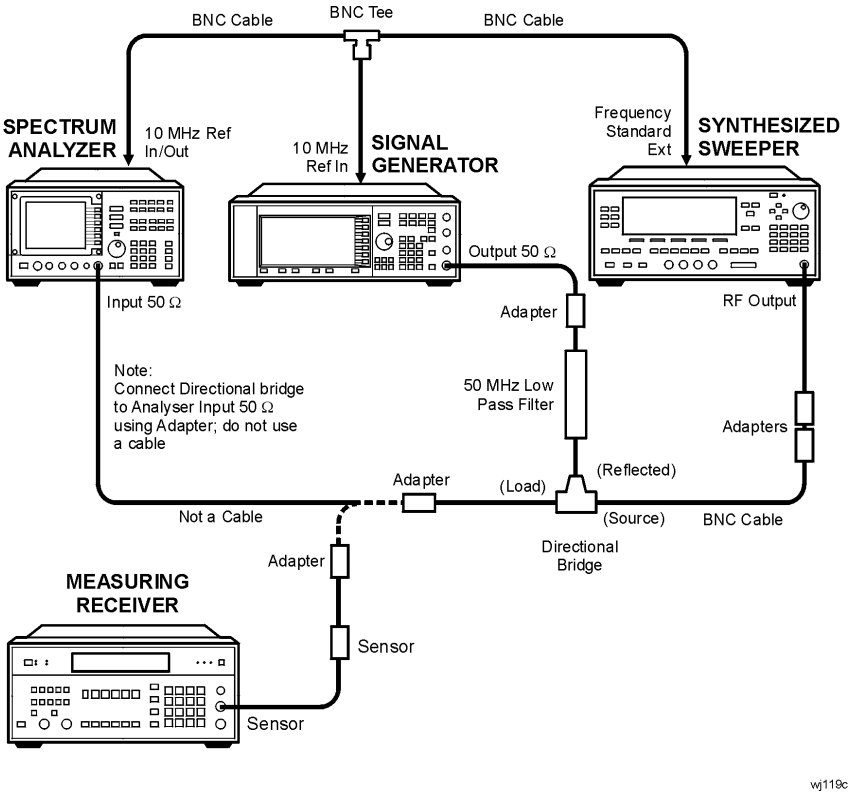

Figure 8-35 Third Order Intermodulation Test Setup (2.75 GHz to 6.5 GHz)

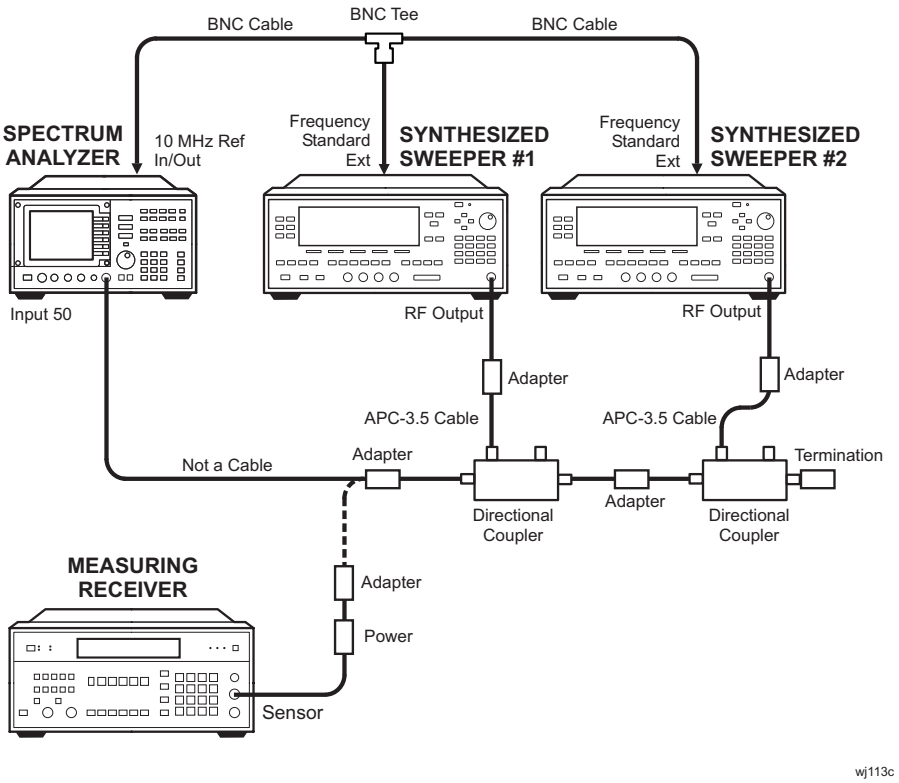

ManualsPlus.com

Equipment

Signal generator . . . . . Agilent E4421B

Synthesized sweeper #1 . . . . . Agilent 83640B

Synthesized sweeper #2 . . . . . Agilent 83650A

Measuring receiver . . . . . Agilent 8902A

Power sensor . . . . . Agilent 8481A

Directional bridge . . . . . Agilent 8721A

Directional coupler *(2 required)* 0955-0098

50 MHz low-pass filter 0955-0306

50 Ω SMA termination 1810-0118

Adapters

Type N (f) to APC 2.4mm (f) . . . . . Agilent 11903B

Type N (m) to BNC (m) *(2 required)* 1250-1473

Type N (m) to BNC (f) 1250-1476

Type N (f) to type N (f) 1250-1472

Type N (m) to APC 3.5 (m) 1250-1743

SMA (m) to SMA (m) 1250-1159

BNC tee (m) (f) (f) 1250-0781

APC 3.5 (f) to 2.4 mm (f) *(2 required)* . . . . . Agilent 11901B

Cables

BNC, 122 cm (48 in.) *(4 required)* . . . . . Agilent 10503A

APC 3.5, 91 cm (36 in.) *(2 required)* 8120-4291

ManualsPlus.com

Procedure

Third Order Intermodulation (< 2.9 GHz)

1. Connect the equipment as shown in Figure 8-34, but do not connect the directional bridge to the spectrum analyzer.
2. Set the Agilent E4421B controls as follows:

   Frequency . . . . . 45 MHz

   Amplitude . . . . . –14 dBm

   Amplitude increment . . . . . 0.04 dB

   Output . . . . . 50 Ω

3. Press **INSTR PRESET** on the Agilent 83640B and set the controls as follows:

   CW frequency . . . . . 45.05 MHz

   Power level . . . . . –110 dBm

   Modulation . . . . . off

   RF power . . . . . off

   Frequency standard switch (rear panel) . . . . . EXT

4. On the Agilent 8902A, set the controls as follows:

   Function . . . . . RF power

   Log/linear . . . . . Log

5. Press **PRESET** on the spectrum analyzer. Set the controls as follows:

   Center frequency . . . . . 45.0 MHz

   Center frequency step . . . . . 50 kHz

   Span . . . . . 1 kHz

   Reference level . . . . . –20 dBm

   Resolution BW . . . . . 10 Hz

6. Zero the Agilent 8902A/Agilent 8485A combination and calibrate the Agilent 8481A at 50 MHz as described in the Agilent 8902A Operation Manual.
7. Connect the power sensor to the output of the directional bridge using an adapter; do not use a cable.

ManualsPlus.com

8. Press **Amplitude** on the Agilent E4421B and use the increment ⇓ and ⇑ keys to adjust the amplitude for a –20 dBm ±0.1 dB reading on the Agilent 8902A display.
9. Disconnect the power sensor from the directional bridge. Connect the directional bridge directly to the spectrum analyzer input using an adapter, not a cable.
10. On the spectrum analyzer, press **PEAK SEARCH**, **MKR** →, and **MARKER** → **REF LVL**. Wait for completion of a new sweep. Press **MKR, MARKER DELTA**, **FREQUENCY**, and ⇑.
11. On the HP 83640B, press **RF**, **ON**, **POWER LEVEL**, –14, and **dBm**.
12. On the spectrum analyzer, press **PEAK SEARCH**.
13. On the Agilent 83640B, adjust the power level for a ΔMKR amplitude reading of 0 dB ±0.17 dB on the spectrum analyzer.
14. On the spectrum analyzer, press **MKR**, **MARKER NORMAL**, **PEAK SEARCH, MARKER DELTA**, **FREQUENCY**, ⇓, and ⇓. Wait for completion of a new sweep. Press **PEAK SEARCH**.
15. Record the spectrum analyzer ΔMKR amplitude reading below as the lower product suppression.

    Lower product suppression_____ dBc

16. On the Agilent E4421B, press **FREQUENCY,** 45.05, and **MHz**.
17. On the Agilent 83640B, press **CW,** 45, and **MHz**.
18. On the spectrum analyzer, press **FREQUENCY**, ⇑, ⇑, and ⇑. Wait for completion of a new sweep. Press **PEAK SEARCH**.
19. Record the spectrum analyzer ΔMKR amplitude reading below as the upper product suppression.

    Upper product suppression _____ dBc

20. Between the upper and lower product suppressions recorded in steps 15 and 19 above, record the more positive suppression as the third order intermodulation distortion at 45 MHz.

    Third order
    intermodulation distortion, 45 MHz _____ dBc

ManualsPlus.com

Third Order Intermodulation (2.9 GHz to 6.46 GHz)

21. Connect the equipment as shown in Figure 8-35, but do not connect the directional coupler to the spectrum analyzer. The spectrum analyzer provides the 10 MHz reference to the synthesized sweepers.
22. On the Agilent 83640B, press **INSTR PRESET**. Set the controls as follows:

    Power level . . . . . 0 dBm

    Modulation . . . . . off

    RF power. . . . . off

    Frequency standard switch (Rear Panel) . . . . . .EXT
23. On the Agilent 83650A, press **PRESET**. Set the controls as follows:

    Power level . . . . . 0 dBm

    Modulation . . . . . off

    RF power. . . . . off
24. On the Agilent 83640B, press **CW**, 5, and **GHz**.
25. On the Agilent 83650A, press **CW**, 5.00005, and **GHz**.
26. Enter the power sensor 5 GHz calibration factor into the Agilent 8902A.
27. On the spectrum analyzer, press **PRESET, RECALL**, **MORE 1 OF 2**, and **FACTORY PRSEL PK**. Set the controls as follows:

    Center frequency . . . . . .5.0 GHz

    Reference level . . . . . .–15 dBm

    Span . . . . . 10 kHz

    Center frequency step . . . . . 50 kHz

    Resolution BW . . . . . 300 Hz

    Video average . . . . . off
28. Connect the power sensor to the directional coupler using an adapter; do not use a cable.
29. On the Agilent 83640B, press **RF, ON**, and **POWER LEVEL**. Adjust the power level for a –15 dBm ±0.1 dB reading on the Agilent 8902A display.

ManualsPlus.com

30. Disconnect the power sensor from the directional coupler. Connect the directional coupler to the spectrum analyzer INPUT 50 Ω using an adapter. Do not use a cable.

31. On the spectrum analyzer, press **PEAK SEARCH**, **AMPLITUDE**, **MORE 1 OF 3**, **MORE 2 OF 3**, and **PRESEL AUTO PK**. Wait for the PEAKING message to disappear. Press **SPAN**, 1, **kHz**, **BW**, 10, and **Hz**.

32. On the spectrum analyzer, press **PEAK SEARCH**, **MKR** →, and **MARKER** → **REF LVL**. Wait for completion of a new sweep. Press **MKR, MARKER DELTA**, **FREQUENCY,** and ⇑.

33. On the Agilent 83650A, press **RF, ON**, and **POWER LEVEL**.

34. On the spectrum analyzer, press **PEAK SEARCH**.

35. On the Agilent 83650A, adjust the power level for a ΔMKR amplitude reading of 0.0 dB ±0.17 dB on the spectrum analyzer.

36. On the spectrum analyzer, press **MKR, MARKER NORMAL**, **PEAK SEARCH, MARKER DELTA, FREQUENCY,** and ⇑. Press **BW**, **VID AVG ON**, 5, **Hz**, **TRACE,** and **CLEAR WRITE A**. Wait until VAVG 5 is displayed above the graticule.

37. Press **SGL SWP** and wait for completion of a new sweep. Press **PEAK SEARCH**. Record the spectrum analyzer ΔMKR amplitude reading below as the upper product suppression.

Upper product suppression _____ dBc

38. On the spectrum analyzer, press **FREQUENCY,** ⇑, ⇑, and ⇑. Press **TRIG**, **SWEEP CONT, TRACE**, and **CLEAR WRITE A**. Wait until VAVG 5 is displayed above the graticule.

39. Press **SGL SWP** and wait for completion of a new sweep. Press **PEAK SEARCH**. Record the spectrum analyzer ΔMKR amplitude reading below as the lower product suppression.

Lower product suppression_____ dBc

40. Between the upper and lower product suppressions recorded in steps 37 and 39 above, record the more positive suppression as the uncorrected third order intermodulation distortion.

Uncorrected third order
intermodulation distortion _____ dBc

ManualsPlus.com

41. The uncorrected third order intermodulation distortion represents the distortion with –25 dBm at the input mixer. The distortion products with –30 dBm at the input mixer will be 10 dB lower than the distortion products measured. Subtract 10 dB from the uncorrected third order intermodulation distortion and record the result as the third order intermodulation distortion at 5 GHz.

Third order
intermodulation distortion, 5 GHz _____ dBc

Third Order Intermodulation (>6.46 GHz)

42. On the Agilent 83640B, press **CW**, 8, **GHz**, **POWER LEVEL**, 0, **dBm**, **RF,** and **OFF**.

43. On the Agilent 83650A, press **CW,** 8.00005, **GHz**, **POWER LEVEL**, 0, **dBm**, **RF,** and **OFF**.

44. Enter the power sensor 8 GHz calibration factor into the Agilent 8902A.

45. On the spectrum analyzer, press **PRESET, RECALL**, **MORE 1 OF 2**, and **FACTORY PRSEL PK**. Set the controls as follows:

Center frequency . . . . . .8.0 GHz

Reference level . . . . . .–15 dBm

Span . . . . . 10 kHz

Center frequency step . . . . . 50 kHz

Resolution BW . . . . . 300 Hz

Video average . . . . . off

46. Disconnect the directional coupler from the spectrum analyzer. Connect the power sensor to the directional coupler using an adapter; do not use a cable.

47. On the Agilent 83640B, press **RF, ON**, and **POWER LEVEL**. Adjust the power level for a –15 dBm ±0.1 dB reading on the Agilent 8902A display.

48. Disconnect the power sensor from the directional coupler. Connect the directional coupler to the spectrum analyzer INPUT 50 Ω using an adapter. Do not use a cable.

49. On the spectrum analyzer, press **PEAK SEARCH, AMPLITUDE**, **MORE 1 OF 3, MORE 2 OF 3,** and **PRESEL AUTO PK**. Wait for the PEAKING message to disappear. Press **SPAN,** 1, **kHz**, **BW**, 10, and **Hz**.

ManualsPlus.com

50. On the spectrum analyzer, press **PEAK SEARCH, MKR** →, and **MARKER** → **REF LVL**. Wait for completion of a new sweep. Press **MKR, MARKER DELTA**, **FREQUENCY,** and ⇑.

51. On the Agilent 83650A, press **RF, ON**, and **POWER LEVEL**.

52. On the spectrum analyzer, press **PEAK SEARCH**.

53. On the Agilent 83650A, adjust the power level for a ΔMKR amplitude reading of 0.0 dB ±0.17 dB on the spectrum analyzer.

54. On the spectrum analyzer, press **MKR**, **MARKER NORMAL**, **PEAK SEARCH**, **MARKER DELTA**, **FREQUENCY**, and ⇑. Press **BW**, **VID AVG ON,** 5, **Hz**, **TRACE,** and **CLEAR WRITE A**. Wait until VAVG 5 is displayed above the graticule.

55. Press **SGL SWP** and wait for completion of a new sweep. Press **PEAK SEARCH**. Record the spectrum analyzer ΔMKR amplitude reading below as the upper product suppression.

Upper product suppression _____ dBc

56. On the spectrum analyzer, press **FREQUENCY,** ⇓, ⇓, and ⇓. Press **TRIG**, **SWEEP CONT, TRACE,** and **CLEAR WRITE A**. Wait until VAVG 5 is displayed above the graticule.

57. Press **SGL SWP** and wait for completion of a new sweep. Press **PEAK SEARCH**. Record the spectrum analyzer ΔMKR amplitude reading below as the lower product suppression.

Lower product suppression_____ dBc

58. Between the upper and lower product suppressions recorded in steps 55 and 57 above, record the more positive suppression as the uncorrected third order intermodulation distortion.

Uncorrected third order
intermodulation distortion _____ dBc

59. Subtract 10 dB from the uncorrected third order intermodulation distortion and record the result as the third order intermodulation distortion at 8 GHz.

Third order
intermodulation distortion, 8 GHz _____ dBc

ManualsPlus.com

9 General Regulatory and Safety Information

ManualsPlus.com

Safety Symbols

The following safety symbols are used throughout this manual. Familiarize yourself with each of the symbols and its meaning before operating this instrument.

CAUTION

The *caution* sign denotes a hazard. It calls attention to a procedure which, if not correctly performed or adhered to, could result in damage to or destruction of the instrument. Do not proceed beyond a *caution* sign until the indicated conditions are fully understood and met.

WARNING

The *warning* sign denotes a hazard. It calls attention to a procedure which, if not correctly performed or adhered to, could result in injury or loss of life. Do not proceed beyond a *warning* sign until the indicated conditions are fully understood and met.

⚠ The instruction document symbol. The product is marked with this symbol when it is necessary for the user to refer to the instructions in the manual.

CE The CE mark is a registered trademark of the European Community. (If accompanied by a year, it is when the design was proven.)

CSA The CSA mark is a registered trademark of the Canadian Standards Association.

ISM1-A This is a symbol of an Industrial Scientific and Medical Group 1 Class A product.

~ This symbol indicates that the input power required is AC.

| This symbol is used to mark the ON position of the power line switch.

○ This symbol is used to mark the OFF position of the power line switch.

ManualsPlus.com

General Safety Considerations

WARNING

***Before this instrument is switched on*, make sure it has been properly grounded through the protective conductor of the ac power cable to a socket outlet provided with protective earth contact.**

Any interruption of the protective (grounding) conductor, inside or outside the instrument, or disconnection of the protective earth terminal can result in personal injury.

WARNING

There are many points in the instrument which can, if contacted, cause personal injury. Be extremely careful.

Any adjustments or service procedures that require operation of the instrument with protective covers removed should be performed only by trained service personnel.

CAUTION

Before this instrument is switched on, make sure its primary power circuitry has been adapted to the voltage of the ac power source.

Failure to set the ac power input to the correct voltage could cause damage to the instrument when the ac power cable is plugged in.

ManualsPlus.com

ManualsPlus.com

10 Using Performance Tests – Volume II

ManualsPlus.com

What You'll Find in This Chapter

These procedures test the electrical performance of the spectrum analyzer against the specifications. None of the test procedures requires removing the cover of the instrument. This chapter also provides instructions for using the Agilent 85629B test and adjustment module functional tests. The Agilent 85629B is not compatible with the Agilent 8564E/EC or Agilent 8565E/EC.

NOTE Performance tests 11–16, 34, 36–41, and 43–46 in this section use the Agilent 3335A Synthesized Level Generator. If an Agilent 3335A instrument is not available, see Chapter 8 of Volume I of the *Agilent Technologies 8560 E-Series and EC-Series Spectrum Analyzers Calibration Guide*, which provides performance tests which use alternate equipment.

What Is Performance Verification?

The highest-level testing, called **performance verification**, verifies that the analyzer performance meets all specifications. Performance verification consists of executing all of the performance tests. It is time-consuming and requires extensive test equipment. Table 10-1, on page 519 is a complete listing of those tests.

NOTE Refer to specifications listed in this manual for exact specifications for your model number spectrum analyzer.

ManualsPlus.com

Performance Tests versus Operation Verification

Operation verification tests are a subset of performance tests and check only the most critical specifications of the analyzer. These tests are software controlled for the Agilent Technologies 8560 E-Series and EC-Series. They require much less time and equipment to run than doing all the performance verification tests. Operation verification testing is recommended for verification of overall instrument operation, either as part of incoming inspection or after repair. Table 1-1 in Chapter 1, Volume I, of the *Agilent Technologies 8560 E-Series and EC-Series Spectrum Analyzers Calibration Guide* lists the performance test and test equipment used for operation verification.

ManualsPlus.com

Before You Start

There are three things you must do *before* starting performance verification or operation verification:

1. Switch the analyzer on and let it warm up in accordance with warm-up requirements in the specifications chapter.
2. After the analyzer has warmed up as specified, perform “Trace Alignment Procedure and Reference Level Calibration” in the user's guide.
3. Read the rest of this section before you start any of the tests.

Test Equipment You'll Need

Table 10-4 lists the recommended test equipment for the performance tests. Any equipment that meets the critical specifications given in the table can be substituted for the recommended model (s). The table also lists the recommended equipment for the analyzer adjustment procedures. The adjustment procedures are located in the service guide.

Recording Test Results

Record test results in the performance test record located in Chapter 11 . The test record lists test specifications and acceptable limits. We recommend that you make a copy of this table, record the complete test results on the copy, and keep the copy for your calibration test record. This record could prove invaluable in tracking gradual changes in test results over long periods of time.

If the Analyzer Doesn't Meet Specifications

If the analyzer doesn't meet one or more of the specifications during testing, complete any remaining tests and record all test results on a copy of the test record. Refer to the user's guide chapter “If You Have A Problem”. If an error message is displayed, press **PRESET CAL**, and select **REALIGN LO & IF**. If the error message persists after the automatic RF, LO, and IF adjustments are completed, refer to the troubleshooting information in the user's guide.

Calibration Cycle

The performance tests should be used to check the spectrum analyzer against its specifications every two years for the Agilent 8560E/EC, Agilent 8561E/EC, Agilent 8562E/EC, and Agilent 8563E/EC, and every one year for the Agilent 8564E/EC and Agilent 8565E/EC.

ManualsPlus.com

The frequency reference must be adjusted and checked at the same time. Refer to the “10 MHz Frequency Reference Adjustment” in the service guide.

Table 10-1 Required Performance Tests

Test	Agilent 8560E/EC note 1	Agilent 8561E/EC	Agilent 8562E/EC	Agilent 8563E/EC	Agilent 8564E/EC	Agilent 8565E/EC
1. 10 MHz Ref Output Accuracy (non-Option 103)	√	√	√	√	√	√
2. 10 MHz Ref Output Accuracy (Option 103)	note 2	note 2	note 2	note 2	note 2	note 2
3. Fast Sweep Time Accuracy (all EC-Series and E-Series, Option 007 instruments)	note 3	note 3	note 3	note 3	note 3	note 3
4. Calibrator Amplitude Accuracy	√	√	√	√	√	√
5. Displayed Average Noise Level	√					
6. Displayed Average Noise Level		√				
7. Displayed Average Noise Level			√			
8. Displayed Average Noise Level				√		
9. Displayed Average Noise Level					√	
10. Displayed Average Noise Level						√
11. Resolution Bandwidth Switching and IF Alignment Uncertainty	√	√	√	√	√	√
12. Resolution Bandwidth Accuracy and Selectivity	√	√	√	√	√	√
13. Input Attenuator Switching Uncertainty	√	√	√	√		
14. Input Attenuator Switching Uncertainty					√	√
15. IF Gain Uncertainty	√	√	√	√	√	√
16. Scale Fidelity	√	√	√	√	√	√
17. Residual FM	√	√	√	√	√	√
18. Noise Sidebands	note 4	note 4		note 4		
19. Noise Sidebands	√	√	√	√	√	√
20. Image, Multiple, and Out-of-Range Responses	√					

ManualsPlus.com

Table 10-1 Required Performance Tests (Continued)

Test	Agilent 8560E/EC note 1	Agilent 8561E/EC	Agilent 8562E/EC	Agilent 8563E/EC	Agilent 8564E/EC	Agilent 8565E/EC
21. Image, Multiple, Out-of-Band, and Out-of-Range Responses		√				
22. Image, Multiple, Out-of-Band, and Out-of-Range Responses			√			
23. Image, Multiple, and Out-of-Band Responses				√		
24. Image, Multiple, and Out-of-Band Responses					√	
25. Image, Multiple, and Out-of-Band Responses						√
26. Frequency Readout/Frequency Count Marker Accuracy	√					
27. Frequency Readout/Frequency Count Marker Accuracy		√				
28. Frequency Readout/Frequency Count Marker Accuracy			√			
29. Frequency Readout/Frequency Count Marker Accuracy				√		
30. Frequency Readout/Frequency Count Marker Accuracy					√	
31. Frequency Readout/Frequency Count Marker Accuracy						√
32. Pulse Digitization Uncertainty	√	√	√	√	√	√
33. Second Harmonic Distortion	√					
34. Second Harmonic Distortion		√				
35. Second Harmonic Distortion			√	√	√	√
36. Frequency Response	√					
37. Frequency Response		√				
38. Frequency Response			√			
39. Frequency Response				√		
40. Frequency Response					√	
41. Frequency Response						√

ManualsPlus.com

Table 10-1 Required Performance Tests (Continued)

Test	Agilent 8560E/EC note 1	Agilent 8561E/EC	Agilent 8562E/EC	Agilent 8563E/EC	Agilent 8564E/EC	Agilent 8565E/EC
42. Frequency Span Accuracy	√	√	√	√	√	√
43. Third Order Intermodulation Distortion	√					
44. Third Order Intermodulation Distortion		√				
45. Third Order Intermodulation Distortion			√	√		
46. Third Order Intermodulation Distortion					√	√
47. Gain Compression	√					
48. Gain Compression		√				
49. Gain Compression			√	√		
50. Gain Compression					√	√
51. 1st LO OUTPUT Amplitude	√					
52. 1st LO OUTPUT Amplitude		√	√	√	√	√
53. Sweep Time Accuracy	√	√	√	√	√	√
54. Residual Responses	√					
55. Residual Responses		√				
56. Residual Responses			√	√	√	√
57. IF INPUT Amplitude Accuracy	note 5	√	note 5	√	√	√
58. Gate Delay Accuracy and Gate Length Accuracy	√	√	√	√	√	√
59. Delayed Sweep Accuracy	√	√	√	√	√	√

1. Also perform the tests listed in Table 10-2 for instruments with Option 002.
2. Instruments with Option 103 use this test. Non-Option 103 instruments use test number 1.
3. EC-Series and Option 007 E-Series instruments use this test.
4. This test is used only for older 8560E/EC, Agilent 8561E/EC, and Agilent 8563E/EC spectrum analyzers.
5. Not required for instruments with Option 002 or Option 327.

ManualsPlus.com

Table 10-2 Additional Required Tests

8560E/EC (Option 002) Tests
60. Tracking Generator Level Flatness
61. Absolute Amplitude and Vernier Accuracy
62. Maximum Leveled Output Power
63. Power Sweep Range
64. RF Power Off Residuals
65. Harmonic Spurious Outputs
66. Non-Harmonic Spurious Outputs
67. LO Feedthrough Amplitude
68. Tracking Generator Feedthrough
69. Frequency Tracking Range
70. Tracking Generator Frequency Accuracy

ManualsPlus.com

Agilent 85629B Functional Tests

The Agilent 85629B test and adjustment module (TAM) can be used to perform several automatic functional tests on the spectrum analyzer. These tests provide increased confidence in analyzer operation while requiring very little equipment or operator attention. Hard-copy results are possible with a GPIB printer. Because these functional tests have greater measurement uncertainties than their related performance tests, they should not be used as part of a calibration. The greater measurement uncertainties in the TAM functional tests are a result of the limited set of test equipment.

Table 10-3 lists the functional tests, their corresponding performance tests, and the types of test equipment required for each test. The recommended test equipment for the functional tests is indicated in Table 10-4 by the letter “M” in the “Use” column.

Spectrum Analyzer/TAM Compatibility

The Agilent 85629B is not compatible with the Agilent 8564E/EC and Agilent 8565E/EC. The Agilent 8562E//TAM Interface Software provides limited TAM compatibility with the Agilent 8562E/EC. This software is available with Option 915 (add Service Documentation), and uses the same controller required by the Operation Verification Software described “Getting Started” in Chapter 1, of Volume I, of the calibration guide. A firmware note that provides compatibility information is supplied with each spectrum analyzer and TAM. Refer to this note to determine which tests are valid for a particular version of TAM firmware.

ManualsPlus.com

Table 10-3 TAM Functional Tests

Functional Tests	Corresponding Performance Test	Equipment Required
Noise Sidebands	18, 19	None
Residual FM	17	None
IF Gain Uncertainty	15	Source
Scale Fidelity	16	Source
Input Attenuator Switching Uncertainty	13, 14	Source
Frequency Marker Accuracy	26 through 31	Source
Image, Multiple, and Out-of-Range Responses	20 through 25	Source
RES BW Accuracy and Selectivity	11, 12	Source
2nd Harmonic Distortion	33, 34, 35	Source, 50 MHz LPF
Frequency Span Accuracy	42	Source
Gain Compression	47, 48, 49, 50	Source
Third Order Intermodulation Distortion	43, 44, 45, 46	Source
Frequency Response	36 through 41	Source, power meter
1st LO OUTPUT Amplitude	51, 52	Power meter
Displayed Average Noise	5 through 10	50 Ω termination
Residual Responses	54, 55, 56	50 Ω termination

ManualsPlus.com

Running the Functional Tests

Connect the test and adjustment module (TAM) to the rear panel of the spectrum analyzer. The instrument should be allowed to warm up for at least 5 minutes before running any functional test. Perform the following steps to run the tests:

CAUTION The spectrum analyzer power must be turned OFF before removing or installing a TAM or any option module. If the spectrum analyzer is powered ON during removal or installation, damage will result.

1. Perform a REF LVL CAL (reference level calibration), as described in the user's guide, before continuing.
2. Press **MODULE** to access the TAM main menu. If any error message appears, refer to the “Error Messages” section of the *Test and Adjustment Module Manual*. Error messages are displayed either in one of the corners of the screen, at the bottom line of the main menu, or in the active function block.

NOTE The Agilent 5629B TAM is not compatible with the Agilent 8564E/EC and Agilent 8565E/EC. Software is necessary to use the Agilent 85629B TAM with the Agilent 8562E/EC Spectrum Analyzer.

3. Press **Config** to access the configuration menu. Verify that the TAM is properly configured and the test equipment is properly connected to GPIB. Refer to the “System Configuration Menu” section of the *Test and Adjustment Module Manual* for more configuration information. If a printer is configured and available, functional test results may be sent to the printer instead of the screen. If everything is properly configured, return to the main menu and press **Test**.
4. Pressing **All Test** executes all the tests listed in the order they appear. To perform an individual test, rotate the knob to locate the arrow beside the desired test. Press **Execute**.
5. Use the **Repeat** operation to find suspected intermittent problems. If a GPIB printer is configured and connected, **Repeat** activates the selected test continuously until you press **ABORT**. The results are sent to the printer. If a printer is unavailable, the **Repeat** mode pauses at the end of each test to display test results, then continues after you press **RETURN**. This sequence continues until you press **ABORT**.

ManualsPlus.com

Table 10-4 Recommended Test Equipment

Instrument	Critical Specifications for Equipment Substitution	Recommended Model	Use
Sources			
Synthesized sweeper	Frequency range: 8560E/EC, 10 MHz to 12.0 GHz Agilent 8561E/EC, 10 MHz to 12.0 GHz Agilent 8562E/EC, 10 MHz to 13.2 GHz Agilent 8563E/EC, 10 MHz to 26.5 GHz Frequency accuracy (CW): 1×10^{-9}/day Leveling modes: Internal &External Modulation modes: AM &Pulse Power level range: –80 to +16 dBm	Agilent 8340A/B* Agilent 83630A Opt 001, 008	P,A,T,M,V
Synthesized sweeper *(for* Agilent *8564E/EC and* Agilent *8565E/EC)*	Frequency range: Agilent 8564E/EC, 10 MHz to 40.0 GHz Agilent 8565E/EC, 10 MHz to 50.0 GHz Frequency accuracy (CW): 1×10^{-9}/day Leveling mode: Internal Power level range: –35 to +16 dBm	Agilent 83650A Opt 001, 008	P,A,T,V
Synthesizer/level generator	Frequency range: 200 Hz to 80 MHz Frequency accuracy: 1×10^{-7}/month Flatness: ±0.15 dB Attenuator accuracy: <±0.09 dB External 10 MHz reference input Frequency resolution: 1 Hz	Agilent 3335A*	P,A,T,M,V
Synthesized signal generator	Frequency range: 100 kHz to 2.5 GHz Residual SSB phase noise at 1 GHz: <–73 dBc/Hz at 10 Hz offset <–107 dBc/Hz at 1 kHz offset <–124 dBc/Hz at 10 kHz offset <–124 dBc/Hz at 100 kHz offset	Agilent 8663A	P,V

ManualsPlus.com

Table 10-4 Recommended Test Equipment (Continued)

Instrument	Critical Specifications for Equipment Substitution	Recommended Model	Use
Pulse/function generator	Frequency range: 10 kHz to 50 MHz Pulse width: 200 ns; Output amplitude: 5 V peak-to-peak Functions: pulse &triangle Pulse rise time: <100 ns TTL sync output	Agilent 8116A	P,A
AM/FM signal generator	Frequency range: 1 MHz to 200 MHz Frequency modulation mode Modulation oscillator frequency: 1 kHz FM peak deviation: 5 kHz	Agilent 8640B Agilent 8642A	A
Counters			
Frequency standard	Output frequency: 10 MHz Accuracy: $<1 \times 10^{-10}$	Agilent 5061B	P,A
Microwave frequency counter	Frequency range: 9 MHz to 7 GHz External frequency reference input Timebase accuracy (aging): $<5 \times 10^{-10}$/day	Agilent 5343A *OR* Agilent 5350B* Option 001	P,A,T,M,V
Universal counter	Modes: TI A→B, frequency count Time interval measurement range: 100 ns to 120 s Frequency count range: 400 Hz to 11 MHz Frequency resolution: 1 mHz Timebase accuracy (aging): $<3 \times 10^{-7}$/month External 10 MHz reference input	Agilent 5334A/B	P

ManualsPlus.com

Table 10-4 Recommended Test Equipment (Continued)

Instrument	Critical Specifications for Equipment Substitution	Recommended Model	Use
Receivers			
Spectrum analyzer *(for 8560E/EC (Option 002))*	Frequency range: 300 kHz to 7 GHz Relative amplitude accuracy: 300 kHz to 2.7 GHz: <±1.8 dB 300 kHz to 7 GHz: <±4.0 dB Absolute amplitude accuracy: 3.9 GHz to 6.9 GHz: <±2.7 dB Frequency accuracy: <±10 kHz at 7 GHz	Agilent 8566B*	P,A,T
Spectrum analyzer	Frequency range: 300 kHz to 7 GHz Amplitude range: –70 dBm to +20 dBm	Agilent 8566B*	A,T
Measuring receiver	Compatible w/power sensors dB relative mode Resolution: 0.01 dB Reference accuracy: <±1.2%	Agilent 8902A*	P,A,T,M,V
Sensors			
Power sensor *(for 8560E/EC,* Agilent *8561E/EC or* Agilent *8562E/EC)*	Frequency range: 10 MHz to 13.2 GHz Maximum SWR: 1.40 (10 to 30 MHz) 1.18 (30 to 50 MHz) 1.10 (50 MHz to 2 GHz) 1.18 (2 to 13.2 GHz)	Agilent 8481A*	P,A,T,M,V
Power sensor	Frequency range: 250 MHz to 350 MHz Power range: 100 nW to 10 µW Maximum SWR: 1.15 (250 to 350 MHz)	Agilent 8481D	P,A
Power sensor	Frequency range: 100 kHz to 2.9 GHz Maximum SWR: 1.1 (1 MHz to 2.0 GHz) 1.30 (2.0 GHz to 2.9 GHz)	Agilent 8482A*	P,A,T, M,V

ManualsPlus.com

Table 10-4 Recommended Test Equipment (Continued)

Instrument	Critical Specifications for Equipment Substitution	Recommended Model	Use
Power sensor *(for* Agilent *8563E/EC)*	Frequency range: 50 MHz to 26.5 GHz Maximum SWR: 1.15 (50 to 100 MHz) 1.10 (100 MHz to 2 GHz) 1.15 (2.0 to 12.4 GHz) 1.20 (12.4 to 18 GHz) 1.25 (18 to 26.5 GHz)	Agilent 8485A*	P,A,T, M,V
Power sensor *(for* Agilent *8564E/EC and* Agilent *8565E/EC)*	Frequency range: 50 MHz to 50 GHz Maximum SWR: 1.15 (50 to 100 MHz) 1.10 (100 MHz to 2 GHz) 1.15 (2.0 to 12.4 GHz) 1.20 (12.4 to 18 GHz) 1.25 (18 to 26.5 GHz) 1.30 (26.5 to 40 GHz) 1.50 (40 to 50 GHz)	Agilent 8487A	P,V
Other Equipment			
Controller	Required to run operation verification software. No substitute.	Agilent 9816A, Agilent 9836A/C, Agilent310, 320 Agilent 332, 360	V
Oscilloscope	Bandwidth (3 dB): dc to 100 MHz Two channels Minimum vertical deflection factor: ≤5 mV/div Minimum timebase setting: <100 ns Digitizing display with time cursors Delta-t cursor accuracy in 500 ns/Div: <0.1 µs	Agilent 54501A*	P,A,T

ManualsPlus.com

Table 10-4 Recommended Test Equipment (Continued)

Instrument	Critical Specifications for Equipment Substitution	Recommended Model	Use
Amplifier	Frequency range: 8560E/EC, 2.0 to 2.9 GHz Agilent 8561E/EC, 2.0 to 6.5 GHz Agilent 8562E/EC, 2.0 to 8.0 GHz Agilent 8563E/EC, 2.0 to 8.0 GHz Agilent 8564E/EC, 2.0 to 8.0 GHz Agilent 8565E/EC, 2.0 to 8.0 GHz Minimum output power (leveled) 2.0 to 8.0 GHz: +16 dBm Output SWR (leveled): <1.7	Agilent 11975A	P
Power supply	Output voltage: ≥24 Vdc Output voltage accuracy: <±0.2 V	Agilent 6114A	A
Signature multimeter	Clock frequency >10 MHz Time interval function	Agilent 5005A/B	T
Digital voltmeter	Range: –15 Vdc to +120 Vdc Accuracy: <±1 mV on 10 V range Input impedance: ≥1 M Ω	Agilent 3456A*	A,T
Probes			
DVM test leads	≥36 inches, alligator clips, probe tips	Agilent 34118A	A,T
High frequency probe	No substitute	Agilent 85024A	T
Accessories			
Directional bridge	Frequency range: 1 to 80 MHz Coupling: 6 dB (nominal) Maximum coupling deviation: <1 dB (nominal) Directivity: 40 dB minimum Impedance: 50 Ω (nominal)	Agilent 8721A	P

ManualsPlus.com

Table 10-4 Recommended Test Equipment (Continued)

Instrument	Critical Specifications for Equipment Substitution	Recommended Model	Use
Directional coupler *(forAgilent 8561E/EC)* *(two required)*	Frequency range: 2.0 to 6.5 GHz Coupling: 16.0 dB (nominal) Maximum coupling deviation: ±1 dB (nominal) Directivity: 14 dB minimum Flatness: 0.75 dB maximum VSWR: <1.45 Insertion loss: <1.3 dB	0955-0098	P
Directional coupler *(forAgilent 8562E/EC, Agilent 8563E/EC,* *Agilent 8564E/EC, and* *Agilent 8565E/EC)* *(two required)*	Frequency range: 2.0 to 8.1 GHz Coupling: 16.0 dB (nominal) Maximum coupling deviation: ±1 dB (nominal) Directivity: 14 dB minimum Flatness: 0.75 dB maximum VSWR: <1.45 Insertion loss: <1.3 dB	0955-0098	P
10 dB step attenuator	Attenuation range: 30 dB Frequency range: dc to 80 MHz Connectors: BNC (f)	Agilent 355D	P,V
1 dB step attenuator	Attenuation range: 12 dB Frequency range: dc to 80 MHz Connectors: BNC (f)	Agilent 355C	P,V
20 dB fixed attenuator	Frequency range: dc to 18 GHz Attenuation accuracy: <±1 dB Maximum SWR: 1.2 (dc to 2.9 GHz)	Agilent 8491B Option 020	P,V
10 dB fixed attentuator	Frequency range: dc to 18 GHz Attenuation accuracy: <±0.6 dB Maximum SWR: 1.2 (dc to 2.9 GHz)	Agilent 8491B Option 010	P,V
Reference attenuator	Supplied with Agilent 8481D	Agilent 11708A	P,A

ManualsPlus.com

Table 10-4 Recommended Test Equipment (Continued)

Instrument	Critical Specifications for Equipment Substitution	Recommended Model	Use
Termination *(for 8560E/EC)*	Frequency range: dc to 2.9 GHz Impedance: 50 Ω Maximum SWR: <1.10 Connector: Type N (m)	Agilent 908A	P,M,V
Termination *(for* Agilent *8561E/EC)*	Frequency range: dc to 6.5 GHz Impedance: 50 Ω Maximum SWR: <1.10 Connector: Type N (m)	Agilent 909A	P,M,V
Termination *(for* Agilent *8562E/EC)*	Frequency range: dc to 13.2 GHz Impedance: 50 Ω Maximum SWR: <1.10 Connector: Type N (m)	Agilent 909A	
Termination *(for* Agilent *8563E/EC)*	Frequency range: dc to 26.5 GHz Impedance: 50 Ω Maximum SWR: <1.22 Connector: APC 3.5	Agilent 909D Option 012	P,M,V
Termination *(for* Agilent *8564E/EC and* Agilent *8565E/EC)*	Frequency range: dc to 50 GHz Impedance: 50 Ω Maximum SWR: <1.22 Connector: 2.4 mm (f)	Agilent 85138B	P,V
Low-pass filter	Cutoff frequency: 50 MHz Rejection at 65 MHz: >40 dB Rejection at 75 MHz: >60 dB	0955-0306	P,M,V
Low-pass filter *(two required for* Agilent *8562E/EC,* Agilent *8563E/EC,* Agilent *8564E/EC, and* Agilent *8565E/EC)*	Cutoff frequency: 1.8 GHz Rejection at >3 GHz: >45 dB 0.1 dB ripple	0955-0491	P

ManualsPlus.com

Table 10-4 Recommended Test Equipment (Continued)

Instrument	Critical Specifications for Equipment Substitution	Recommended Model	Use
Low-pass filter *(two required for Agilent 8561E/EC,* *Agilent 8562E/EC, Agilent 8563E/EC,* *Agilent8564E/EC, and Agilent8565E/EC)*	Cutoff frequency: 4.4 GHz Rejection at 5.5 GHz: >40 dB	Agilent 11689A RLC F-2643 Agilent 9135-0005	P
Power splitter *(for 8560E/EC or Agilent 8561E/EC)*	Frequency range: 1 kHz to 12 GHz Insertion loss: 6 dB (nominal) Output tracking: <0.25 dB Equivalent output SWR: <1.22	Agilent 11667A	P,A,M,V
Power splitter *(for*Agilent *8562E/EC)*	Frequency range: dc to 13.2 GHz Output tracking: <0.25 dB Insertion loss: 6 dB (nominal) Equivalent output SWR: <1.22	Agilent 11667B	
Power splitter *(for*Agilent *8563E/EC)*	Frequency range: 1 kHz to 26.5 GHz Insertion loss: 6 dB (nominal) Output tracking: <0.25 dB, <18 GHz Equivalent output SWR: <1.22	Agilent 11667B	P,A,M,V
Power splitter *(for*Agilent *8564E/EC and* Agilent *8565E/EC)*	Frequency range: 30 Hz to 50 GHz Insertion loss: 6 dB (nominal) Output tracking: <0.35 dB, <26.5 GHz <0.40 dB, <50 GHz Equivalent output SWR: 1.29, <26.5 GHz 1.50, <40 GHz 1.65, <50 GHz	Agilent 11667C	P,A,V,T
Service accessory kit	No substitute	08562-60021	A,T
Tuning tool	No substitute	8710-1010	A
Cables			
Test cable	Connectors: BNC (m)-to-SMB (f) Length: ≥61 cm (24 in.)	85680-60093	A,M

ManualsPlus.com

Table 10-4 Recommended Test Equipment (Continued)

Instrument	Critical Specifications for Equipment Substitution	Recommended Model	Use
Cable, RG-214/U	Connectors: Type N (m) Length: ≥91 cm (36 in.)	Agilent 11500A	P,V
Cable	Connectors: SMA (m) Length: 24 to 36 inches	8120-1578	P
Cable, 50 Ω coaxial *(five required)*	Connectors: BNC (m) Length: ≥ 122 cm (48 in.)	Agilent 10503A	P,A,V
Cable *(two required)*	Frequency range: 30 Hz to 26.5 GHz Maximum SWR: <1.4 at 26.5 GHz Maximum insertion loss: 3 dB Connectors: APC 3.5 (m), both ends Length: ≥ 61 cm (24 in.)	8120-4921	P,A,M,V
Cable *(for* Agilent *8564E/EC and* Agilent *8565E/EC)*	Frequency range: 30 Hz to 50 GHz Maximum SWR: <1.55 at 50 GHz Maximum insertion loss: 5.75 dB Connectors: 2.4 mm (f) to 2.4 mm (m) Length: ≥ 1 m (39 in.)	8120-6164	P,A,V,T
Cable, GPIB *(eight required)*	Required w/operation verification software Required w/Agilent 85629B test & adjustment module Length: 2 m (6.6 ft.)	Agilent 10833B	P,A,M
Adapters			
Adapter	Type N (f)-to-BNC (m)	1250-1477	P,A
Adapter *(three required)*	Type N (m)-to-BNC (f)	1250-1476	P,A,V
Adapter	Type N (f)-to-BNC (f)	1250-1474	P,V
Adapter	Type N (m)-to-N (m)	1250-1475	P
Adapter	Type N (f)-to-APC 3.5 (m)	1250-1750	A
Adapter *(two required)*	Type N (m)-to-APC 3.5 (m)	1250-1743	P,M,V
Adapter	Type N (m)-to-APC 3.5 (f)	1250-1744	P,V

ManualsPlus.com

Table 10-4 Recommended Test Equipment (Continued)

Instrument	Critical Specifications for Equipment Substitution	Recommended Model	Use
Adapter	Type N (m)-to-BNC (m)	1250-1473	P
Adapter	Type N (m)-to-N (f)	1250-1472	P
Adapter *(two required)*	Type N (f)-to-APC 3.5 (f)	1250-1745	P,V
Adapter *(two required)*	Type N (m)-to-SMA (f)	1250-1250	P,V
Adapter	Type N (f)-to-SMA (f)	1250-1772	P
Adapter	BNC (f)-to-BNC (f)	1250-0059	A
Adapter	BNC tee (f) (m) (f)	1250-0781	P,A,M,V
Adapter	BNC (f)-to-SMA (m)	1250-1200	P,A,V
Adapter	BNC (f)-to-dual banana plug	1251-2816	A,T
Adapter *(two required)*	APC 3.5 (f)-to-APC 3.5 (f)	5061-5311	P,M,V
Adapter *(two required)*	APC 3.5 (m)-to-APC 3.5 (m)	1250-1748	P,V
Adapter	2.4 mm (f)-to-2.4 mm (f)	Agilent 11900B	P,A,T,V
Adapter	APC 3.5 (f)-to-2.4 mm (f)	Agilent 11901B	P
Adapter	APC 3.5 (m)-to-2.4 mm (f)	Agilent 11901D	P
Adapter	Type N (f)-to-2.4 mm (f)	Agilent 11903B	P,A,T,V
Adapter	Type N (f)-to-2.4 mm (m)	Agilent11903C	P

* Part of microwave workstation

P = performance tests; A = adjustments; M = test & adjustment module; T = troubleshooting; V = operation verification

ManualsPlus.com

1. 10 MHz Reference Output Accuracy

Instrument Under Test

All Agilent 8560 E-Series and EC-Series

NOTE If the spectrum analyzer has Option 103, this test is not applicable. Instead, perform test "2. 10 MHz Reference Output Accuracy (Option 103)," on page 540.

Related Specification

Frequency Reference Accuracy

Related Adjustment

10 MHz Frequency Reference Adjustment (non-Option 103)

Description

This test measures the warmup characteristics of the 10 MHz reference oscillator. The ability of the 10 MHz oscillator to meet its warmup characteristics gives a high level of confidence that it also meets its yearly aging specification.

The analyzer is turned off and cooled for 60 minutes. A frequency counter is connected to the 10 MHz REF IN/OUT and a frequency measurement is made 5 minutes after turning the analyzer on. The frequency measurement is recorded. Another frequency measurement is made 10 minutes later (15 minutes after turning the analyzer on) and the measurement is recorded. A final frequency measurement is made 60 minutes after the analyzer is turned on. The difference between each of the first two measurements and the final measurement is calculated and the results are recorded.

Figure 10-1 Frequency Reference Accuracy Test Setup (Standard)

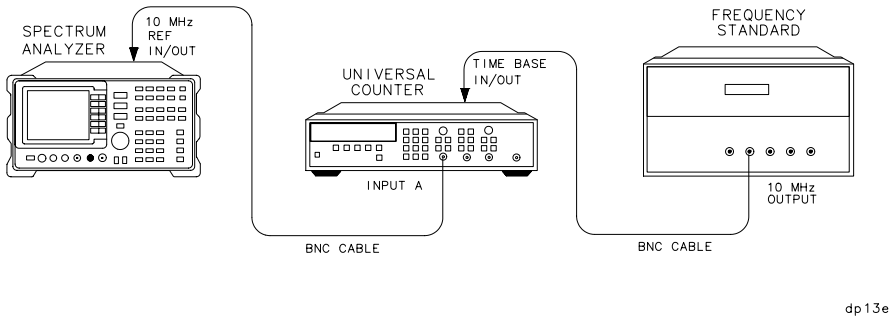

ManualsPlus.com

Equipment

Microwave frequency counter . . . . . Agilent 5334A/B

10 MHz frequency standard . . . . . Agilent 5061B

'Cesium beam standard (or any 10 MHz frequency standard with accuracy $<\pm 1 \times 10^{-10}$/day)

Cable

BNC, 122 cm (48 in.) *(2 required)*. . . . . Agilent 10503A

Procedure

NOTE To simulate a cold start adequately, the spectrum analyzer must have been allowed to sit at room temperature, with power off, at least 60 minutes before beginning this test.

1. After a 60 minute cool-down with power off, connect the equipment as shown in Figure 10-1.
2. Set the spectrum analyzer line switch to ON. Record the power-on time below. If an X is displayed to the left side of the display, press **PRESET**, then record the current time as the power-on time. An X denotes that the analyzer is in external frequency reference mode (internal oscillator is turned off). Pressing **PRESET** sets the analyzer to the internal frequency reference.

   Power-on time (hours/minutes/seconds): _____

3. Set the frequency counter controls as follows:

   Function/data . . . . . Frequency A

   Input A

   ×10 Attenuation . . . . . off

   AC . . . . . off

   50 Ω . . . . . off

   Automatic trigger . . . . . on

   100 kHz filter A . . . . . off

4. On the frequency counter, select a 10-second gate time by pressing **GATE TIME**, 10, **GATE TIME**. Offset the displayed frequency –10 MHz

ManualsPlus.com

by pressing **MATH**, **SELECT/ENTER**, **CHS/EEX**, 10, **CHS/EEX**, 6. Press **SELECT/ENTER** and **SELECT ENTER**. The frequency counter should now display the difference between the INPUT A signal and 10.0 MHz with 0.001 Hz resolution.

5. Perform the next step *5 minutes* after the power-on time recorded in step 2.
6. Wait at least two gate times for the frequency counter to settle. Record the frequency counter reading below as reading #1 with 0.001 Hz resolution.

Reading #1:_____ Hz

7. Proceed with the next step *15 minutes* after the power-on time recorded in step 2.
8. Record the frequency counter reading below as reading #2 with 0.001 Hz resolution.

Reading #2:_____ Hz

9. Perform the next step 60 minutes after the power-on time recorded in step 2. During this waiting period, other performance tests may be executed, under the following conditions:
   a. The analyzer is powered on at all times.
   b. The analyzer is always at room temperature.
   c. The analyzer is never placed in EXT REFERENCE mode.
10. Connect the equipment as shown in Figure 10-1.
11. Set the frequency counter controls as follows:

Function/data . . . . . Frequency A

Input A

×10 Attenuation. . . . . off

AC. . . . . off

50 Ω . . . . . off

Automatic trigger . . . . . on

100 kHz filter A . . . . . off

12. On the frequency counter, select a 10-second gate time by pressing **GATE TIME**, 10, **GATE TIME**. Offset the displayed frequency –10 MHz by pressing **MATH**, **SELECT/ENTER, CHS/EEX**, 10, **CHS/EEX**, 6. Press **SELECT/ENTER** and **SELECT/ENTER**. The frequency counter should now display the difference between the INPUT A signal and 10.0 MHz with 0.001 Hz resolution.

ManualsPlus.com

13. Wait at least two gate times for the frequency counter to settle. Record the frequency counter reading below as reading #3 with 0.001 Hz resolution.

Reading #3: _____ Hz

14. Calculate the 5-minute warmup error by subtracting reading #3 from reading #1 and dividing the result by 10 MHz.

5-minute warmup error = (reading #1 – reading #3)/1×10^7 Hz

5-minute warmup error: _____

15. Calculate the 15-minute warmup error by subtracting reading #3 from reading #2 and dividing the result by 10 MHz.

15-minute warmup error = (reading #2 – reading #3)/1×10^7 Hz

15-minute warmup error: _____

ManualsPlus.com

2. 10 MHz Reference Output Accuracy (Option 103)

Instrument Under Test

All 8560 E-Series and EC-Series Option 103

NOTE If the spectrum analyzer is not an Option 103, this test is not required. Instead, perform Test 1 in this chapter, "1. 10 MHz Reference Output Accuracy," on page 536.

Related Specification

Frequency Reference Accuracy

Related Adjustment

10 MHz Frequency Reference Adjustment

Description

The 300 MHz CAL OUTPUT signal is measured to verify the 10 MHz reference signal accuracy. The CAL OUTPUT signal uses the 10 MHz signal as a reference. Measuring the CAL OUTPUT signal yields higher resolution than measuring the 10 MHz reference directly.

Figure 10-2 Frequency Reference Accuracy Test Setup (Option 103)

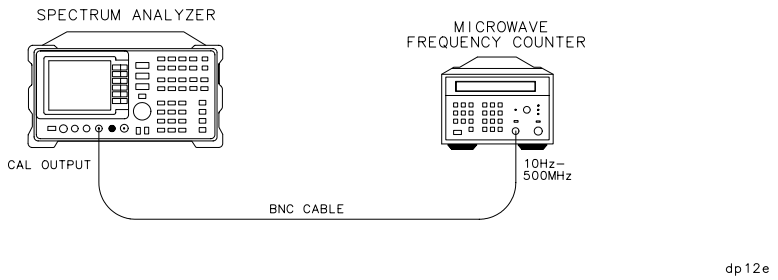

Equipment

Microwave frequency counter . . . . . Agilent 5343A

Cable

BNC, 122 cm (48 in.) . . . . . Agilent 10503A

ManualsPlus.com

Procedure

1. Connect the equipment as shown in <Undefined Cross-Reference>.
2. Set the Agilent 5343A controls as follows:

   Sample rate. . . . . midrange

   50 Ω — 1 M Ω switch . . . . . 50 Ω

   10 Hz — 500 MHz/500 MHz — 26.5 GHz switch . . . . . 10 Hz — 500 MHz

NOTE The Agilent 5343A should have either an Option 001 timebase or should be connected to a house standard with an aging rate better than 5×10^{-10}/day.

3. On the spectrum analyzer, press **PRESET**.

NOTE The spectrum analyzer must be allowed to warm up for at least 5 minutes with the frequency reference set to INTERNAL. If the spectrum analyzer is warmed up with the frequency reference set to EXTERNAL, wait at least 5 minutes after pressing **PRESET** before proceeding with step 4.

4. Wait for the frequency counter to settle. This may take two or three gate times.
5. Read and record the frequency counter display.

   Calibrator frequency: _____

NOTE The frequency reading will be invalid if any error message is displayed, especially a synthesizer-related error message. Refer to the error message descriptions in the user's guide “If You Have A Problem” chapter.

ManualsPlus.com

3. Fast Sweep Time Accuracy (EC-Series and E-Series with Option 007)

Instrument Under Test

8560 E-Series and EC-Series with Option 007

Related Specification

Sweep Time Accuracy <30 ms (EC-Series and E-Series with Option 007)

Related Adjustment

10 MHz frequency reference adjustment
CPU clock PLL adjustment

Description

The sweep time accuracy for sweep times <30 ms, in EC-Series spectrum analyzers and E-Series spectrum analyzers with Option 007, is dependent on the 10 MHz frequency reference absolute accuracy. Therefore, it is only necessary to test the absolute 10 MHz reference accuracy. The procedure measures the 300 MHz CAL OUTPUT frequency since it is referenced to the 10 MHz reference. Measuring the CAL OUTPUT signal yields higher resolution than measuring the 10 MHz reference directly.

Figure 10-3 Fast Sweep Time Accuracy Test Setup (EC-Series and E-Series with Option 007)

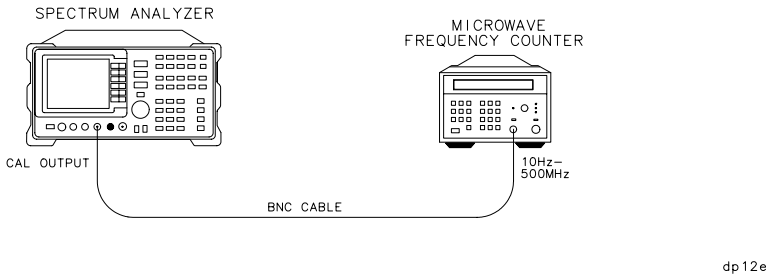

Equipment

Microwave frequency counter . . . . . Agilent 5343A

Cable

BNC, 122 cm (48 in.) . . . . . Agilent 10503A

ManualsPlus.com

Procedure

1. Connect the equipment as shown in Figure 10-3.
2. Set the Agilent 5343A controls as follows:

   Sample rate. . . . . midrange

   50 Ω — 1 M Ω switch . . . . . 50 Ω

   10 Hz — 500 MHz/500 MHz — 26.5 GHz switch . . . . . 10 Hz — 500 MHz

NOTE The Agilent 5343A should have either an Option 001 timebase or should be connected to a house standard with an aging rate better than 5×10^{-10}/day.

3. On the spectrum analyzer, press **PRESET**.

NOTE The spectrum analyzer must be allowed to warm up for at least 5 minutes with the frequency reference set to INTERNAL. If the spectrum analyzer is warmed up with the frequency reference set to EXTERNAL, wait at least 5 minutes after pressing **PRESET** before proceeding with step 4.

4. Wait for the frequency counter to settle. This may take two or three gate times.
5. Read and record the frequency counter display.

   Calibrator frequency: _____

NOTE The frequency reading will be invalid if any error message is displayed, especially a synthesizer-related error message. Refer to the error message descriptions in Chapter 5 of this manual.

6. Calculate and record the sweep time accuracy as follows:

$$\frac{Accuracy = 100(300MHz - Calibration\ Frequency)}{300MHz}$$

   Sweep Time Accuracy: _____ %

ManualsPlus.com

4. Calibrator Amplitude Accuracy

Instrument Under Test

All 8560 E-Series and EC-Series

Related Specification

Calibrator Uncertainty

Related Adjustment

Calibrator Amplitude Adjustment

Description

The amplitude accuracy of the analyzer CAL OUTPUT signal is checked for –10 dBm ±0.3 dB. Performing the 10 MHz Reference Output Accuracy test is sufficient for checking the calibrator frequency accuracy, since the calibrator frequency is a function of the 10 MHz reference.

Figure 10-4 Calibrator Accuracy Test Setup

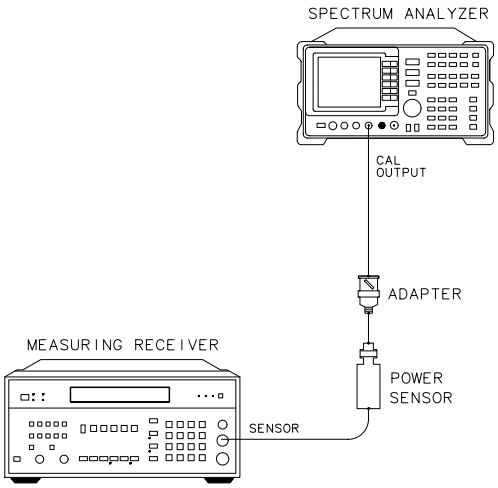

Equipment

Measuring receiver . . . . . Agilent 8902A

Power sensor. . . . . Agilent 8482A

ManualsPlus.com

Adapter

Type N (f) to BNC (m) 1250-1477

Procedure

1. Zero the Agilent 8902A and calibrate the Agilent 8482A power sensor at 300 MHz in log mode, as described in the Agilent 8902A Operation Manual. Enter the power sensor 300 MHz calibration factor into the Agilent 8902A.
2. Connect the power sensor through an adapter directly to the analyzer CAL OUTPUT connector. See Figure 10-4. Read the measuring receiver display. Record the reading below:

Calibrator amplitude:_____ dBm

ManualsPlus.com

5. Displayed Average Noise Level: 8560E/EC

Instrument Under Test

8560E/EC

Related Specification

Displayed Average Noise Level

Related Adjustment

Frequency Response Adjustment

Description

This test measures the displayed average noise level from 30 Hz to 2.9 GHz. The spectrum analyzer input is terminated in 50 Ω. The test first measures the average noise at several discrete frequencies in a narrow span. For the rest of the band, the test tunes the analyzer frequency with the highest response, then reads the average noise in a narrow span.

The noise marker is used to average several points around the frequency of interest. The noise marker also adds amplitude corrections for normalization to a 1 Hz noise bandwidth, log amplifier response, and envelope detector response. These corrections are not necessary and are subtracted out to determine the displayed average noise level.

Figure 10-5 Displayed Average Noise Test Setup

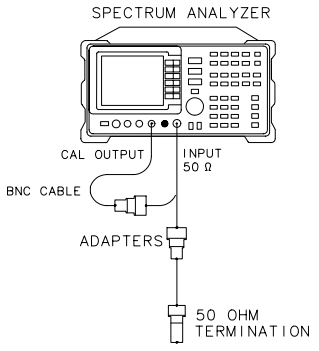

Equipment

50 Ω termination . . . . . Agilent 908A

ManualsPlus.com

Adapter

Type N (m) to BNC (f) 1250-1476

Cable

BNC, 122 cm (48 in.) . . . . . Agilent 10503A

Procedure

1. Connect CAL OUTPUT to INPUT 50 Ω. On the spectrum analyzer, press **PRESET**. Set the controls as follows:

   Center frequency . . . . . 300 MHz

   Span . . . . . 100 Hz

   Reference level . . . . . –10 dBm

   Attenuation . . . . . 0 dB

   Resolution BW (non-Option 103) . . . . . 1 Hz

   Resolution BW (Option 103) . . . . . 10 Hz

   Video BW . . . . . 1 Hz

2. Press **PEAK SEARCH CAL REF LVL ADJUST**.
3. Use the knob or step keys to adjust the REF LVL CAL number until the MKR amplitude is –10.00 dBm ±0.17 dB.

NOTE There will be a delay in the response from changing the REF LVL ADJ value due to sweeps requiring several seconds to update.

4. Connect the Agilent 908A 50 Ω termination to the spectrum analyzer INPUT 50 Ω as shown in Figure 10-5.
5. Set the spectrum analyzer controls as follows:

   Center frequency . . . . . 150 Hz

   Span (non-Option 103) . . . . . 375 Hz

   Span (Option 103) . . . . . 300 Hz

   Resolution BW (non-Option 103) . . . . . 1 Hz

   Resolution BW (Option 103) . . . . . 10 Hz

   Reference level . . . . . –50 dBm

   Markers . . . . . off

6. Press **BW**, **VID AVG ON**, 5, **Hz**. Press **TRACE**, **CLEAR WRITE A**. Wait until VAVG 5 is displayed above the graticule. Press **SGL SWP**, **MKR**,

ManualsPlus.com

30, **Hz**, **MKRNOISE ON**. Read the marker amplitude.

7. The noise marker reading is normalized to a 1 Hz noise bandwidth and adds corrections for the log amplifiers and envelope detector. These corrections should be removed. The appropriate correction is a function of the RES BW setting, as shown below. This amplitude correction will be made to each noise marker measurement.

RES BW	Noise Marker Amplitude Correction
1 Hz	–2.27 dB
10 Hz	+7.70 dB

8. Add the appropriate noise marker amplitude correction indicated in step 7 to the marker amplitude (displayed in dBm /Hz) and record the result in Table 10-5 as the displayed average noise level at 30 Hz.

   Example: If the marker amplitude reads –102.6 dBm/Hz and RES BW is 1 Hz, the displayed average noise level equals –102.6 dBm/Hz –2.27 dB which equals –104.89 dBm.

9. If any of the displayed average noise level readings are within 1.10 dB of the appropriate specification, repeat the measurement in step 6 setting the number of video averages to 100.

10. Press **MKR**, 100, **Hz**, **MKNOISE ON**. Read the marker amplitude.

11. Add the appropriate noise marker amplitude correction indicated in step 7 to the marker amplitude (displayed in dBm/Hz) and record the result in Table 10-5 as the displayed average noise level at 100 Hz.

12. On the spectrum analyzer, press **FREQUENCY**, 1, **kHz**, **MKR**, **MARKERS OFF, TRIG**, **SWEEP CONT**, **TRACE**, **CLEAR WRITE A**.

13. Wait until VAVG 5 is displayed above the graticule. Press **SGL SWP**, **MKR**, 1, **kHz**, **MKRNOISE ON**. Read the marker amplitude.

14. Add the appropriate noise marker amplitude correction indicated in step 7 to the marker amplitude (displayed in dBm/Hz) and record the result in Table 10-5 as the displayed average noise level at 1 kHz.

15. Set the spectrum analyzer controls as follows:

    Center frequency . . . . . 10 kHz

    Span (non-Option 103) . . . . . 375 Hz

    Span (Option 103) . . . . . 1770 Hz

    Reference level. . . . . –80 dBm

    Markers . . . . . off

ManualsPlus.com

Trigger . . . . . Continuous

16. Press **TRACE**, **CLEAR WRITE A**. Wait until VAVG 5 is displayed above the graticule. Press **SGL SWP**, **MKR**, 10, **kHz**, **MKRNOISE ON**. Read the marker amplitude.

17. Add the appropriate noise marker amplitude correction indicated in step 7 to the marker amplitude (displayed in dBm/Hz) and record the result in Table 10-5 as the displayed average noise level at 10 kHz.

18. On the spectrum analyzer, press **FREQUENCY**, 99, **kHz**, **MKR**, **MARKERS OFF**, **TRIG**, **SWEEP CONT**, **TRACE**, **CLEAR WRITE A**.

NOTE There is a residual response at 100 kHz. Tuning to 99 kHz to avoid displaying this response will yield a displayed average noise reading worse than the actual noise at 100 kHz.

19. Wait until VAVG 5 is displayed above the graticule. Press **SGL SWP**, **MKR,** 99, **kHz**, **MKRNOISE ON**. Read the marker amplitude.

20. Add the appropriate noise marker amplitude correction indicated in step 7 to the marker amplitude (displayed in dBm/Hz) and record the result in Table 10-5 as the displayed average noise level at 100 kHz.

21. On the spectrum analyzer, press **FREQUENCY**, 1.02, MHz, **MKR**, **MARKERS OFF, TRIG, SWEEP CONT**, **TRACE CLEAR WRITE A**.

NOTE There is a residual response at 1 MHz. Tuning to 1.02 MHz to avoid displaying this response will yield a displayed average noise reading worse than the actual noise at 1 MHz.

22. Wait until VAVG 5 is displayed above the graticule. Press **SGL SWP**, **MKR**, 1.02, **MHz**, **MKRNOISE ON**. Read the marker amplitude.

23. Add the appropriate noise marker amplitude correction indicated in step 7 to the marker amplitude (displayed in dBm/Hz) and record the result in Table 10-5 as the displayed average noise level from 1 MHz to 10 MHz.

ManualsPlus.com

24. Set the spectrum analyzer controls as follows:

    Start frequency . . . . . 10 MHz

    Stop frequency . . . . . 2.9 GHz

    Markers . . . . . off

    Resolution BW . . . . . 1 MHz

    Video BW . . . . . 10 kHz

    Video average . . . . . off

25. Press **SGL SWP** and wait for the sweep to finish. Press **MKR, MKRNOISE ON, PEAK SEARCH**.

26. Press **MARKER** → **CF**. Set the spectrum analyzer controls as follows:

    Span (non-Option 103) . . . . . 375 Hz

    Span (Option 103) . . . . . 1170 Hz

    Resolution BW (non-Option 103) . . . . . 1 Hz

    Resolution BW (Option 103) . . . . . 10 Hz

    Video BW . . . . . 1 Hz

    Video average . . . . . on

    Trigger . . . . . Continuous

27. Press **TRACE, CLEAR WRITE A**. Wait until VAVG 5 is displayed above the graticule. Press **SGL SWP**. Read the marker amplitude.

28. Add the appropriate noise marker amplitude correction indicated in step 7 to the marker amplitude (displayed in dBm/Hz) and record the result in Table 10-5 as the displayed average noise level from 10 MHz to 2.9 GHz.

ManualsPlus.com

Table 10-5 Displayed Average Noise Level

Frequency	Displayed Average Noise Level (dBm)	Measurement Uncertainty (dB)
30 Hz		+1.24/–1.37
100 Hz		+1.24/–1.37
1 kHz		+1.24/–1.37
10 kHz		+1.24/–1.37
100 kHz		+1.24/–1.37
1 MHz to 10 MHz		+1.24/–1.37
10 MHz to 2.9 GHz		+1.24/–1.37

ManualsPlus.com

6. Displayed Average Noise Level: Agilent 8561E/EC

Instrument Under Test

Agilent 8561E/EC

Related Specification

Displayed Average Noise Level

Related Adjustment

Frequency Response Adjustment

Description

This test measures the displayed average noise level from 30 Hz to 6.5 GHz. The spectrum analyzer input is terminated in 50 ohms. In Band 0, the test first measures the average noise at several discrete frequencies in a narrow span. For the rest of Band 0, and all of Band 1, the test tunes the analyzer frequency across the band, uses the marker to locate the frequency with the highest response, then reads the average noise in a narrow span.

The noise marker is used to average several points around the frequency of interest. The noise marker also adds amplitude corrections for normalization to a 1 Hz noise bandwidth, log amplifier response, and envelope detector response. These corrections are not necessary and are subtracted out to determine the displayed average noise level.

Figure 10-6 Displayed Average Noise Test Setup

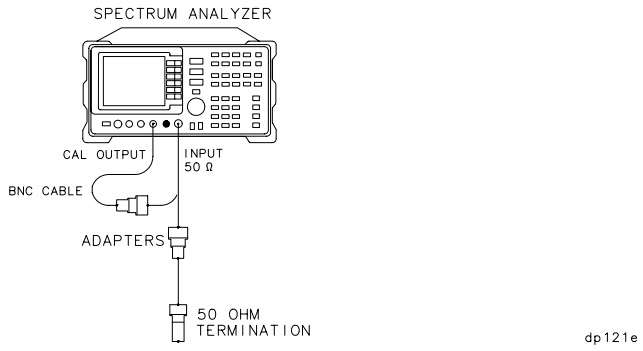

Equipment

50 Ω termination . . . . . Agilent 908A

ManualsPlus.com

Adapter

Type N (m) to BNC (f) 1250-1476

Cable

BNC, 122 cm (48 in.) . . . . . Agilent 10503A

Procedure

Displayed Average Noise, Band 0

1. Connect the CAL OUTPUT to INPUT 50 Ω. On the spectrum analyzer, press **PRESET**. Set the controls as follows:

   Span . . . . . 100 Hz

   Center frequency . . . . . 300 MHz

   Reference level . . . . . –10 dBm

   Attenuation . . . . . 0 dB

   Resolution BW (non-Option 103) . . . . . 1 Hz

   Resolution BW (Option 103) . . . . . 10 Hz

   Video BW . . . . . 1 Hz

2. Press **PEAK SEARCH**, **CAL, REF LVL ADJ**.
3. Use the knob or step keys to adjust the REF LVL ADJ number until the MKR amplitude is –10.00 dBm ±0.17 dB.

NOTE There will be a delay in the response from changing the REF LVL ADJ value due to sweeps requiring several seconds to update.

4. Connect the Agilent 908A 50 Ω termination to the spectrum analyzer INPUT 50 Ω as shown in Figure 10-6.
5. Set the spectrum analyzer controls as follows:

   Reference level . . . . . –50 dBm

   Span (non-Option 103) . . . . . 375 Hz

   Span (Option 103) . . . . . 300 Hz

   Resolution BW (non-Option 103) . . . . . 1 Hz

   Resolution BW (Option 103) . . . . . 10 Hz

   Center frequency . . . . . 150 Hz

ManualsPlus.com

Markers . . . . . off

6. Press **BW, VID AVG ON**, 5, **Hz**. Press **TRACE, CLEAR WRITE A**. Wait until VAVG 5 is displayed above the graticule. Press **SGL SWP, MKR**, 30, **Hz**, **MKNOISE ON**. Read the marker amplitude.

7. The noise marker reading is normalized to a 1 Hz noise bandwidth and adds corrections for the log amplifiers and envelope detector. These corrections should be removed. The appropriate correction is a function of the RES BW setting, as shown below. This amplitude correction will be made to each noise marker measurement.

RES BW	Noise Marker Amplitude Correction
1 Hz	–2.27 dB
10 Hz	+7.70 dB

8. Add the appropriate noise marker amplitude correction indicated in step 7 to the marker amplitude (displayed in dBm/Hz) and record the result in Table 10-6 as the displayed average noise level at 30 Hz.

   Example: If the marker amplitude reads –102.6 dBm/Hz and RES BW is 1 Hz: Displayed average noise level = –102.6 dBm/Hz plus –2.27 dB = –104.89 dBm

9. If any of the displayed average noise level readings are within 1.10 dB of the appropriate specification, repeat the measurement in step 6 setting the number of video averages to 100.

10. Press **MKR**, 100, **Hz**, **MKNOISE ON**. Read the marker amplitude.

11. Add the appropriate noise marker amplitude correction indicated in step 7 to the marker amplitude (displayed in dBm/Hz) and record the result in Table 10-6 as the displayed average noise level at 100 Hz.

12. On the spectrum analyzer, press **FREQUENCY**, 1, **kHz**, **MKR**, **MARKERS OFF, TRIG, SWEEP CONT, TRACE, CLEAR WRITE A**.

13. Wait until VAVG 5 is displayed above the graticule. Press **SGL SWP**, **MKR**, 1, **kHz**, **MKNOISE ON**. Read the marker amplitude.

14. Add the appropriate noise marker amplitude correction indicated in step 7 to the marker amplitude (displayed in dBm/Hz) and record the result in Table 10-6 as the displayed average noise level at 1 kHz.

15. Set the spectrum analyzer controls as follows:

    Center frequency . . . . . 10 kHz

    Span (non-Option 103) . . . . . 375 Hz

    Span (Option 103) . . . . . 1770 Hz

ManualsPlus.com

Reference level . . . . . –80 dBm

Markers. . . . . off

Trigger . . . . . Continuous

16. Press **TRACE**, **CLEAR WRITE A**. Wait until VAVG 5 is displayed above the graticule. Press **SGL SWP**, **MKR**, 10, **kHz**, **MKNOISE ON**. Read the marker amplitude.

17. Add the appropriate noise marker amplitude correction indicated in step 7 to the marker amplitude (displayed in dBm/Hz) and record the result in Table 10-6 as the displayed average noise level at 10 kHz.

18. On the spectrum analyzer, press **FREQUENCY**, 99, **kHz**, **MKR**, **MARKERS OFF**, **TRIG**, **SWEEP CONT**, **TRACE CLEAR WRITE A**.

NOTE There is a residual response at 100 kHz. Tuning to 99 kHz to avoid displaying this response will yield a displayed average noise reading worse than the actual noise at 100 kHz.

19. Wait until VAVG 5 is displayed above the graticule. Press **SGL SWP**, **MKR**, 99, **kHz**, **MKNOISE ON**. Read the marker amplitude.

20. Add the appropriate noise marker amplitude correction indicated in step 7 to the marker amplitude (displayed in dBm/Hz) and record the result in Table 10-6 as the displayed average noise level at 100 kHz.

21. On the spectrum analyzer, press **FREQUENCY**, 1.02, MHz, **MKR**, **MARKERS OFF**, **TRIG**, **SWEEP CONT**, **TRACE**, **CLEAR WRITE A**.

NOTE There is a residual response at 1 MHz. Tuning to 1.02 MHz to avoid displaying this response will yield a displayed average noise reading worse than the actual noise at 1 MHz.

22. Wait until VAVG 5 is displayed above the graticule. Press **SGL SWP**, **MKR**, 1.02, **MHz**, **MKNOISE ON**. Read the marker amplitude.

23. Add the appropriate noise marker amplitude correction indicated in step 7 to the marker amplitude (displayed in dBm/Hz) and record the result in Table 10-6 as the displayed average noise level from 1 MHz to 10 MHz.

24. Set the spectrum analyzer controls as follows:

Start frequency . . . . . 10 MHz

Stop frequency . . . . . 2.9 GHz

Markers. . . . . off

Resolution BW . . . . . 1 MHz

ManualsPlus.com

Video BW . . . . . 10 kHz

Video average . . . . . off

25. Press **SGL SWP** and wait for a new sweep to finish. Press **MKR**, **MKNOISE ON, PEAK SEARCH**.

26. Press **MARKER→ CF**. Set the controls as follows:

Span (non-Option 103) . . . . . 375 Hz

Span (Option 103) . . . . . 1770 Hz

Resolution BW (non-Option 103) . . . . . 1 Hz

Resolution BW (Option 103) . . . . . 10 Hz

Video BW . . . . . 1 Hz

Video average . . . . . on

Trigger . . . . . Continuous

27. Press **TRACE**, **CLEAR WRITE A**. Wait until VAVG 5 is displayed above the graticule. Press **SGL SWP**. Read the marker amplitude.

28. Add the appropriate noise marker amplitude correction indicated in step 7 to the marker amplitude (displayed in dBm/Hz) and record the result in Table 10-6 as the displayed average noise level from 10 MHz to 2.9 GHz.

Displayed Average Noise, Band 1

29. Set the spectrum analyzer controls as follows:

Start frequency . . . . . 2.9 GHz

Stop frequency . . . . . 6.5 GHz

Markers . . . . . off

Resolution BW . . . . . 1 MHz

Video BW . . . . . 10 kHz

Video average . . . . . OFF

30. Repeat steps 25 through 27.

31. Add the appropriate noise marker amplitude correction indicated in step 7 to the marker amplitude (displayed in dBm/Hz) and record the result in Table 10-6 as the displayed average noise level from 2.9 GHz to 6.5 GHz.

ManualsPlus.com

Table 10-6 Displayed Average Noise Level

Frequency	Displayed Average Noise Level (dBm)	Measurement Uncertainty (dB)
30 Hz		+1.24/–1.37
100 Hz		+1.24/–1.37
1 kHz		+1.24/–1.37
10 kHz		+1.24/–1.37
100 kHz		+1.24/–1.37
1 MHz to 10 MHz		+1.24/–1.37
10 MHz to 2.9 GHz		+1.24/–1.37
2.9 to 6.5 GHz		+1.24/–1.37

ManualsPlus.com

7. Displayed Average Noise Level: Agilent 8562E/EC

Instrument Under Test

Agilent 8562E/EC

Related Specification

Displayed Average Noise Level

Related Adjustment

Frequency Response Adjustment

Description

This test measures the displayed average noise level from 9 kHz to 13.2 GHz (30 Hz to 13.2 GHz if analyzer has Option 006). The spectrum analyzer input is terminated in 50 ohms. In Band 0, the test first measures the average noise at several discrete frequencies in a narrow span. For the rest of Band 0, and all other bands, the test tunes the analyzer frequency across the band, uses the marker to locate the frequency with the highest response, then reads the average noise in a narrow span.

The noise marker is used to average several points around the frequency of interest. The noise marker also adds amplitude corrections for normalization to a 1 Hz noise bandwidth, log amplifier response, and envelope detector response. These corrections are not necessary and are subtracted out to determine the displayed average noise level.

Figure 10-7 Displayed Average Noise Test Setup

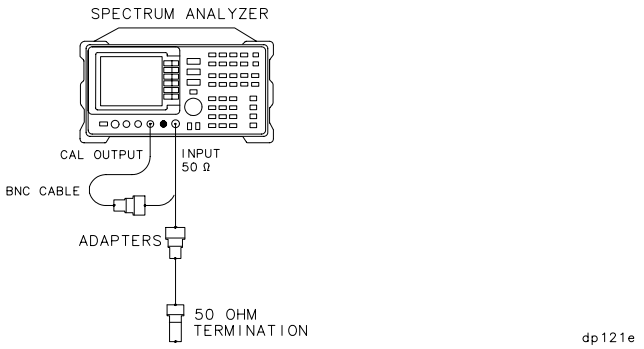

ManualsPlus.com

Equipment

50 Ω termination . . . . . Agilent 909A

Adapters

Type N (m) to BNC (f) 1250-1476

Type N (m) to APC 3.5 (f) 1250-1744

Type N (f) to APC 3.5 (f) (Option 026 only) 1250-1745

APC 3.5 (f) to APC 3.5 (f) (Option 026 only) 5061-5311

Cable

BNC, 122 cm (48 in.) . . . . . Agilent 10503A

Procedure

Displayed Average Noise, Band 0

1. Connect the CAL OUTPUT to INPUT 50 Ω. On the spectrum analyzer, press **PRESET FREQUENCY** 300 MHz. Set the controls as follows:

   Span . . . . . 100 Hz

   Reference level . . . . . –10 dBm

   Attenuation . . . . . 0 dB

   Resolution BW (non-Option 103) . . . . . 1 Hz

   Resolution BW (Option 103) . . . . . 10 Hz

   Video BW . . . . . 1 Hz

2. Press **PEAK SEARCH CAL REF LVL ADJ**.
3. Use the knob or step keys to adjust the REF LVL ADJ number until the MKR amplitude is –10.00 dBm ±0.17 dB. Press **STORE REF LVL**.

NOTE There will be a delay in the response from changing the REF LVL ADJ value due to sweeps requiring several seconds to update.

4. Connect the Agilent 909A 50 Ω termination to the spectrum analyzer INPUT 50 Ω as shown in Figure 10-7.
5. A noise marker reading is normalized to a 1 Hz noise bandwidth and has corrections added for the log amplifiers and envelope detector.

ManualsPlus.com

These corrections should be removed. The appropriate correction is a function of the resolution BW setting, as shown below. This amplitude correction will be made to each noise marker measurement.

RES BW	Noise Marker Amplitude Correction
1 Hz	–2.27 dB
10 Hz	+7.70 dB

6. If spectrum analyzer is an Option 006, do the following steps, (otherwise continue with step 7):

   a. Set the spectrum analyzer controls as follows:

      Reference level . . . . . –50 dBm

      Span (non-Option 103) . . . . . 375 Hz

      Span (Option 103). . . . . 300 Hz

      Resolution BW (non-Option 103). . . . . 1 Hz

      Resolution BW (Option 103) . . . . . 10 Hz

      Center frequency . . . . . 150 Hz

      Markers. . . . . off

   b. Press **BW VID AVG ON** 5 Hz. Press **TRACE, CLEAR WRITE A**. Wait until VAVG 5 is displayed above the graticule. Press **SGL SWP** and wait for completion of a new sweep. Press **MKR,** 30, **Hz**, **MKNOISE ON**. Read the marker amplitude.

   c. Add the appropriate noise marker amplitude correction indicated in step 5 to the marker amplitude (displayed in dBm/Hz) and record the result in Table 10-7 as the displayed average noise level at 30 Hz.

      Example: If the marker amplitude reads –102.6 dBm/Hz and RES BW is 1 Hz: Displayed average noise level = –102.6 dBm/Hz plus –2.27 dB = –104.89 dBm

   d. If any of the displayed average noise level readings are within 1.10 dB of the appropriate specification, repeat the measurement in step b setting the number of video averages to 100.

   e. On the spectrum analyzer, press **FREQUENCY**, 1, kHz, **MKR**, **MARKERS OFF, TRIG, SWEEP CONT, TRACE, CLEAR WRITE A**.

   f. Wait until VAVG 5 is displayed above the graticule. Press **SGL SWP** and wait for completion of a new sweep. Press **MKR**, 1, **kHz**, **MKNOISE ON**. Read the marker amplitude.

ManualsPlus.com

g. Add the appropriate noise marker amplitude correction indicated in step 5 to the marker amplitude (displayed in dBm/Hz) and record the result in Table 10-7 as the displayed average noise level at 1 kHz.

7. Set the spectrum analyzer controls as follows:

Center frequency . . . . . 10 kHz

Span (non-Option 103). . . . . 375 Hz

Span (Option 103) . . . . . 1770 Hz

Resolution BW (non-Option 103). . . . . 1 Hz

Resolution BW (Option 103) . . . . . 10 Hz

Reference level . . . . . .–70 dBm

Markers. . . . . off

Trigger . . . . . .Continuous

8. Press **BW, VID AVG ON**, 5, **Hz**, **TRACE, CLEAR WRITE A**. Wait until VAVG 5 is displayed above the graticule. Press **SGL SWP** and wait for completion of a new sweep. Press **MKR**, 10, **kHz**, **MKNOISE ON**. Read the marker amplitude.

9. Add the appropriate noise marker amplitude correction indicated in step 5 to the marker amplitude (displayed in dBm/Hz) and record the result in Table 10-7 as the displayed average noise level at 10 kHz.

10. On the spectrum analyzer, press **FREQUENCY**, 99, kHz, **MKR**, **MARKERS OFF, TRIG, SWEEP CONT**, **TRACE, CLEAR WRITE A**.

NOTE There is a residual response at 100 kHz. Tuning to 99 kHz to avoid displaying this response will yield a displayed average noise reading worse than the actual noise at 100 kHz.

11. Wait until VAVG 5 is displayed above the graticule. Press **SGL SWP** and wait for completion of a new sweep. Press **MKR**, 99, **kHz**, **MKNOISE ON**. Read the marker amplitude.

12. Add the appropriate noise marker amplitude correction indicated in step 5 to the marker amplitude (displayed in dBm/Hz) and record the result in Table 10-7 as the displayed average noise level at 100 kHz.

13. On the spectrum analyzer, press **FREQUENCY**, 1.02, **MHz**, **MKR**, **MARKERS OFF, TRIG, SWEEP CONT**, **TRAC,E CLEAR WRITE A**.

ManualsPlus.com

NOTE There is a residual response at 1 MHz. Tuning to 1.02 MHz to avoid displaying this response will yield a displayed average noise reading worse than the actual noise at 1 MHz.

14. Wait until VAVG 5 is displayed above the graticule. Press **SGL SWP** and wait for completion of a new sweep. Press **MKR,** 1.02, **MHz**, **MKNOISE ON**. Read the marker amplitude.

15. Add the appropriate noise marker amplitude correction indicated in step 5 to the marker amplitude (displayed in dBm/Hz) and record the result in Table 10-7 as the displayed average noise level from 1 MHz to 10 MHz.

16. Set the spectrum analyzer controls as follows:

    Start frequency . . . . . 10 MHz

    Stop frequency . . . . . 2.9 GHz

    Markers . . . . . off

    Resolution BW . . . . . 1 MHz

    Video BW . . . . . 10 kHz

    Video average . . . . . off

17. Press **SGL SWP** and wait for a new sweep to finish. Press **MKR**, **MKNOISE ON, PEAK SEARCH**.

18. Press **MARKER→ CF**. Set the controls as follows:

    Span (non-Option 103) . . . . . 375 Hz

    Span (Option 103) . . . . . 1770 Hz

    Resolution BW (non-Option 103) . . . . . 1 Hz

    Resolution BW (Option 103) . . . . . 10 Hz

    Video BW . . . . . 1 Hz

    Video average . . . . . on

    Trigger . . . . . Continuous

19. Press **TRACE**, **CLEAR WRITE A**. Wait until VAVG 5 is played above the graticule. Press **SGL SWP** and wait for completion of a new sweep. Read the marker amplitude.

20. Add the appropriate noise marker amplitude correction indicated in step 5 to the marker amplitude (displayed in dBm/Hz) and record the result in Table 10-7 as the displayed average noise level from 10 MHz to 2.9 GHz.

ManualsPlus.com

Displayed Average Noise, Band 1

21. Set the spectrum analyzer controls as follows:

    Start frequency . . . . . 2.9 GHz

    Stop frequency . . . . . 6.46 GHz

    Markers . . . . . off

    Resolution BW . . . . . 1 MHz

    Video BW . . . . . 10 kHz

    Video average . . . . . off

22. Repeat steps 17 through 19.

23. Add the appropriate noise marker amplitude correction indicated in step 5 to the marker amplitude (displayed in dBm/Hz) and record the result in Table 10-7 as the displayed average noise level from 2.9 GHz to 6.46 GHz.

Displayed Average Noise, Band 2

24. Set the spectrum analyzer controls as follows:

    Start frequency . . . . . 6.46 GHz

    Stop frequency . . . . . 13.2 GHz

    Markers . . . . . off

    Resolution BW . . . . . 1 MHz

    Video BW . . . . . 10 kHz

    Video average . . . . . off

25. Repeat steps 17 through 19.

26. Add the appropriate noise marker amplitude correction indicated in step 5 to the marker amplitude (displayed in dBm/Hz) and record the result in Table 10-7 as the displayed average noise level from 6.46 GHz to 13.2 GHz.

ManualsPlus.com

Table 10-7 Displayed Average Noise Level

Frequency	Displayed Average Noise Level (dBm)	Measurement Uncertainty (dB)
30 Hz*		+1.24/–1.37
1 kHz*		+1.24/–1.37
10 kHz		+1.24/–1.37
100 kHz		+1.24/–1.37
1 MHz to 10 MHz		+1.24/–1.37
10 MHz to 2.9 GHz		+1.24/–1.37
2.9 to 6.46 GHz		+1.24/–1.37
6.46 to 13.2 GHz		+1.24/–1.37
*The 30 Hz and 1 kHz measurements apply only to analyzers equipped with Option 006.		

ManualsPlus.com

8. Displayed Average Noise Level: Agilent 8563E/EC

Instrument Under Test

Agilent 8563E/EC

Related Specification

Displayed Average Noise Level

Related Adjustment

Frequency Response Adjustment

Description

This test measures the displayed average noise level from 9 kHz to 26.5 GHz (30 Hz to 26.5 GHz if analyzer has Option 006). The spectrum analyzer input is terminated in 50 ohms. In Band 0, the test first measures the average noise at several discrete frequencies in a narrow span. For the rest of Band 0, and all other bands, the test tunes the analyzer frequency across the band, uses the marker to locate the frequency with the highest response, then reads the average noise in a narrow span.

The noise marker is used to average several points around the frequency of interest. The noise marker also adds amplitude corrections for normalization to a 1 Hz noise bandwidth, log amplifier response, and envelope detector response. These corrections are not necessary and are subtracted out to determine the displayed average noise level.

Figure 10-8 Displayed Average Noise Test Setup

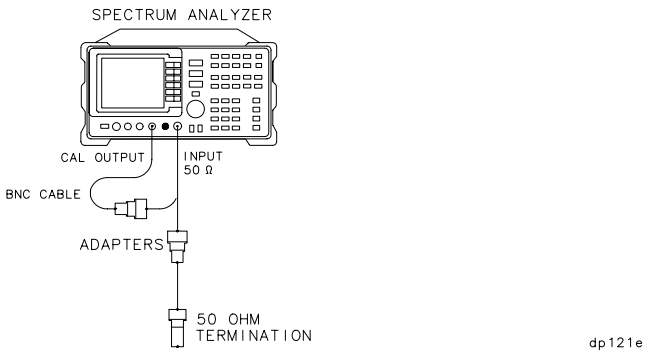

ManualsPlus.com

Equipment

50 Ω termination . . . . . Agilent 909D

Adapters

Type N (m) to BNC (f) 1250-1476

Type N (m) to APC 3.5 (f). 1250-1744

Type N (f) to APC 3.5 (f) (Option 026 only). 1250-1745

APC 3.5 (f) to APC 3.5 (f) (Option 026 only) 5061-5311

Cable

BNC, 122 cm (48 in.) . . . . . Agilent 10503A

Procedure

Displayed Average Noise, Band 0

1. Connect the CAL OUTPUT to INPUT 50 Ω. On the spectrum analyzer, press **PRESET FREQUENCY** 300 MHz. Set the controls as follows:

   Span . . . . . 100 Hz

   Reference level. . . . . –10 dBm

   Attenuation . . . . . 0 dB

   Resolution BW (non-Option 103) . . . . . 1 Hz

   Resolution BW (Option 103) . . . . . 10 Hz

   Video BW . . . . . 1 Hz

2. Press **PEAK SEARCH CAL REF LVL ADJ**.
3. Use the knob or step keys to adjust the REF LVL ADJ number until the MKR amplitude is –10.00 dBm ±0.17 dB. Press **STORE REF LVL**.

NOTE There will be a delay in the response from changing the REF LVL ADJ value due to sweeps requiring several seconds to update.

4. Connect the Agilent 909D 50 Ω termination to the spectrum analyzer INPUT 50 Ω as shown in Figure 10-8.
5. A noise marker reading is normalized to a 1 Hz noise bandwidth and has corrections added for the log amplifiers and envelope detector.

ManualsPlus.com

These corrections should be removed. The appropriate correction is a function of the resolution BW setting, as shown below. This amplitude correction will be made to each noise marker measurement.

RES BW	Noise Marker Amplitude Correction
1 Hz	–2.27 dB
10 Hz	+7.70 dB

6. If spectrum analyzer is an Option 006, do the following steps, (otherwise continue with step 7):

   a. Set the spectrum analyzer controls as follows:

      Reference level . . . . . –50 dBm

      Span (non-Option 103) . . . . . 375 Hz

      Span (Option 103) . . . . . 300 Hz

      Resolution BW (non-Option 103) . . . . . 1 Hz

      Resolution BW (Option 103) . . . . . 10 Hz

      Center frequency . . . . . 150 Hz

      Markers . . . . . off

   b. Press **BW, VID AVG ON,** 5, **Hz**. Press **TRACE, CLEAR WRITE A**. Wait until VAVG 5 is displayed above the graticule. Press **SGL SWP** and wait for completion of a new sweep. Press **MKR**, 30, **Hz**, **MKNOISE ON**. Read the marker amplitude.

   c. Add the appropriate noise marker amplitude correction indicated in step 5 to the marker amplitude (displayed in dBm/Hz) and record the result in Table 10-8 as the displayed average noise level at 30 Hz.

      Example: If the marker amplitude reads –102.6 dBm/Hz and RES BW is 1 Hz: Displayed average noise level = –102.6 dBm/Hz–2.27 dB = –104.89 dBm

   d. If any of the displayed average noise level readings are within 1.10 dB of the appropriate specification, repeat the measurement in step b setting the number of video averages to 100.

   e. On the spectrum analyzer, press **FREQUENCY**, 1, **kHz**, **MKR**, **MARKERS OFF, TRIG, SWEEP CONT, TRACE, CLEAR WRITE A**.

   f. Wait until VAVG 5 is displayed above the graticule. Press **SGL SWP** and wait for completion of a new sweep. Press **MKR**, 1, **kHz**, **MKNOISE ON**. Read the marker amplitude.

ManualsPlus.com

g. Add the appropriate noise marker amplitude correction indicated in step 5 to the marker amplitude (displayed in dBm/Hz) and record the result in Table 10-8 as the displayed average noise level at 1 kHz.

7. Set the spectrum analyzer controls as follows:

Center frequency . . . . . 10 kHz

Span (non-Option 103) . . . . . 375 Hz

Span (Option 103) . . . . . 1770 Hz

Resolution BW (non-Option 103) . . . . . 1 Hz

Resolution BW (Option 103) . . . . . 10 Hz

Reference level. . . . . –70 dBm

Markers . . . . . off

Trigger . . . . . Continuous

8. Press **BW, VID AVG ON,** 5, **Hz**, **TRACE, CLEAR WRITE A**. Wait until VAVG 5 is displayed above the graticule. Press **SGL SWP** and wait for completion of a new sweep. Press **MKR,** 10, **kHz**, **MKNOISE ON**. Read the marker amplitude.

9. Add the appropriate noise marker amplitude correction indicated in step 5 to the marker amplitude (displayed in dBm/Hz) and record the result in Table 10-8 as the displayed average noise level at 10 kHz.

10. On the spectrum analyzer, press **FREQUENCY**, 99, **kHz**, **MKR**, **MARKERS OFF, TRIG, SWEEP CONT, TRACE, CLEAR WRITE A**.

NOTE There is a residual response at 100 kHz. Tuning to 99 kHz to avoid displaying this response will yield a displayed average noise reading worse than the actual noise at 100 kHz.

11. Wait until VAVG 5 is displayed above the graticule. Press **SGL SWP** and wait for completion of a new sweep. Press **MKR,** 99, **kHz**, **MKNOISE ON**. Read the marker amplitude.

12. Add the appropriate noise marker amplitude correction indicated in step 5 to the marker amplitude (displayed in dBm/Hz) and record the result in Table 10-8 as the displayed average noise level at 100 kHz.

13. On the spectrum analyzer, press **FREQUENCY,** 1.02, **MHz**, **MKR**, **MARKERS OFF, TRIG, SWEEP CONT, TRACE, CLEAR WRITE A**.

ManualsPlus.com

NOTE There is a residual response at 1 MHz. Tuning to 1.02 MHz to avoid displaying this response will yield a displayed average noise reading worse than the actual noise at 1 MHz.

14. Wait until VAVG 5 is displayed above the graticule. Press **SGL SWP** and wait for completion of a new sweep. Press **MKR,** 1.02, **MHz**, **MKNOISE ON**. Read the marker amplitude.

15. Add the appropriate noise marker amplitude correction indicated in step 5 to the marker amplitude (displayed in dBm/Hz) and record the result in Table 10-8 as the displayed average noise level from 1 MHz to 10 MHz.

16. Set the spectrum analyzer controls as follows:

    Start frequency . . . . . 10 MHz

    Stop frequency . . . . . 2.9 GHz

    Markers . . . . . off

    Resolution BW . . . . . 1 MHz

    Video BW . . . . . 10 kHz

    Video average . . . . . off

17. Press **SGL SWP** and wait for a new sweep to finish. Press **MKR**, **MKNOISE ON, PEAK SEARCH**.

18. Press **MARKER→ CF**. Set the controls as follows:

    Span (non-Option 103) . . . . . 375 Hz

    Span (Option 103) . . . . . 1770 Hz

    Resolution BW (non-Option 103) . . . . . 1 Hz

    Resolution BW (Option 103) . . . . . 10 Hz

    Video BW . . . . . 1 Hz

    Video average . . . . . on

    Trigger . . . . . Continuous

19. Press **TRACE**, **CLEAR WRITE A**. Wait until VAVG 5 is played above the graticule. Press **SGL SWP** and wait for completion of a new sweep. Read the marker amplitude.

20. Add the appropriate noise marker amplitude correction indicated in step 5 to the marker amplitude (displayed in dBm/Hz) and record the result in Table 10-8 as the displayed average noise level from 10 MHz to 2.9 GHz.

ManualsPlus.com

Displayed Average Noise, Band 1

21. Set the spectrum analyzer controls as follows:

    Start frequency . . . . . 2.9 GHz

    Stop frequency . . . . . 6.46 GHz

    Markers . . . . . off

    Resolution BW . . . . . 1 MHz

    Video BW . . . . . 10 kHz

    Video average . . . . . off

22. Repeat steps 17 through 19.

23. Add the appropriate noise marker amplitude correction indicated in step 5 to the marker amplitude (displayed in dBm/Hz) and record the result in Table 10-8 as the displayed average noise level from 2.9 GHz to 6.46 GHz.

Displayed Average Noise, Band 2

24. Set the spectrum analyzer controls as follows:

    Start frequency . . . . . 6.46 GHz

    Stop frequency . . . . . 13.2 GHz

    Markers . . . . . off

    Resolution BW . . . . . 1 MHz

    Video BW . . . . . 10 kHz

    Video average . . . . . off

25. Repeat steps 17 through 19.

26. Add the appropriate noise marker amplitude correction indicated in step 5 to the marker amplitude (displayed in dBm/Hz) and record the result in Table 10-8 as the displayed average noise level from 6.46 GHz to 13.2 GHz.

ManualsPlus.com

Displayed Average Noise, Band 3, 13.2 GHz to 22 GHz

27. Set the spectrum analyzer controls as follows:

    Start frequency . . . . . 13.2 GHz

    Stop frequency . . . . . 22.0 GHz

    Markers . . . . . off

    Resolution BW . . . . . 1 MHz

    Video BW . . . . . 10 kHz

    Video average . . . . . off

28. Press **SGL SWP** and wait for a new sweep to finish. Press **MKR**, **MKNOISE ON**, **PEAK SEARCH**.

29. Press **MARKER→ CF**. Set the controls as follows:

    Span (non-Option 103) . . . . . 400 Hz

    Span (Option 103) . . . . . 1770 Hz

    Resolution BW (non-Option 103) . . . . . 1 Hz

    Resolution BW (Option 103) . . . . . 10 Hz

    Video BW . . . . . 1 Hz

    Video average . . . . . on

    Trigger . . . . . Continuous

30. Press **TRACE**, **CLEAR WRITE A**. Wait until VAVG 5 is displayed above the graticule. Press **SGL SWP** and wait for completion of a new sweep. Read the marker amplitude.

31. Add the appropriate noise marker amplitude correction indicated in step 5 to the marker amplitude (displayed in dBm/Hz) and record the result in Table 10-8 as the displayed average noise level from 13.2 GHz to 22.0 GHz.

Displayed Average Noise, Band 3, 22 GHz to 26.5 GHz

32. Set the spectrum analyzer controls as follows:

    Start frequency . . . . . 22.0 GHz

    Stop frequency . . . . . 26.5 GHz

    Markers . . . . . off

ManualsPlus.com

Resolution BW . . . . . 1 MHz

Video BW . . . . . 10 kHz

Video average . . . . . off

33. Repeat steps 28 through 30.

34. Add the appropriate noise marker amplitude correction indicated in step 5 to the marker amplitude (displayed in dBm/Hz) and record the result in Table 10-8 as the displayed average noise level from 22.0 GHz to 26.5 GHz.

Table 10-8 Displayed Average Noise Level

Frequency	Displayed Average Noise Level (dBm)	Measurement Uncertainty (dB)
30 Hz*		+1.24/–1.37
1 kHz*		+1.24/–1.37
10 kHz		+1.24/–1.37
100 kHz		+1.24/–1.37
1 MHz to 10 MHz		+1.24/–1.37
10 MHz to 2.9 GHz		+1.24/–1.37
2.9 to 6.46 GHz		+1.24/–1.37
6.46 to 13.2 GHz		+1.24/–1.37
13.2 to 22.0 GHz		+1.24/–1.37
22.0 to 26.5 GHz		+1.24/–1.37
*The 30 Hz and 1 kHz measurements apply only to analyzers equipped with Option 006.		

ManualsPlus.com

9. Displayed Average Noise Level: Agilent 8564E/EC

Instrument Under Test

Agilent 8564E/EC

Related Specification

Displayed Average Noise Level

Related Adjustment

Frequency Response Adjustment

Description

This test measures the displayed average noise level from 9 kHz to 40 GHz (30 Hz to 40 GHz if analyzer has Option 006). The spectrum analyzer input is terminated in 50 ohms. In Band 0, the test first measures the average noise at several discrete frequencies in a narrow span. For the rest of Band 0, and all other bands, the test tunes the analyzer frequency across the band, uses the marker to locate the frequency with the highest response, then reads the average noise in a narrow span.

The noise marker is used to average several points around the frequency of interest. The noise marker also adds amplitude corrections for normalization to a 1 Hz noise bandwidth, log amplifier response, and envelope detector response. These corrections are not necessary and are subtracted out to determine the displayed average noise level.

Figure 10-9 Displayed Average Noise Test Setup

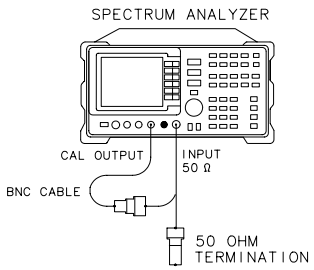

xj18e

ManualsPlus.com

Equipment

50 Ω termination . . . . . Agilent 85138B

Adapters

Type N (m) to BNC (f) 1250-1476

Type N (f) to 2.4 mm (f) . . . . . Agilent 11903B

Cable

BNC, 122 cm (48 in.) . . . . . Agilent 10503A

Procedure

Displayed Average Noise, Band 0

1. Connect the CAL OUTPUT to INPUT 50 Ω. On the spectrum analyzer, press **PRESET, FREQUENCY,** 300, **MHz**., Set the controls as follows:

   Span . . . . . 100 Hz

   Reference level. . . . . –10 dBm

   Attenuation . . . . . 0 dB

   Resolution BW (non-Option 103) . . . . . 1 Hz

   Resolution BW (Option 103) . . . . . 10 Hz

   Video BW . . . . . 1 Hz

2. Press **PEAK SEARCH, CAL, REF LVL ADJ**.
3. Use the knob or step keys to adjust the REF LVL ADJ number until the MKR amplitude is –10.00 dBm ±0.17 dB. Press **STORE REF LVL**.

NOTE There will be a delay in the response from changing the REF LVL ADJ value due to sweeps requiring several seconds to update.

4. Connect the Agilent 85138B 50 Ω termination to the spectrum analyzer INPUT 50 Ω as shown in Figure 10-9.

ManualsPlus.com

5. A noise marker reading is normalized to a 1 Hz noise bandwidth and has corrections added for the log amplifiers and envelope detector. These corrections should be removed. The appropriate correction is a function of the resolution BW setting, as shown below. This amplitude correction will be made to each noise marker measurement.

RES BW	Noise Marker Amplitude Correction
1 Hz	–2.27 dB
10 Hz	+7.70 dB

6. If spectrum analyzer is an Option 006, do the following steps, (otherwise continue with step 7):

   a. Set the spectrum analyzer controls as follows:

      Reference level . . . . . –50 dBm

      Span (non-Option 103) . . . . . 375 Hz

      Span (Option 103) . . . . . 300 Hz

      Resolution BW (non-Option 103) . . . . . 1 Hz

      Resolution BW (Option 103) . . . . . 10 Hz

      Center frequency . . . . . 150 Hz

      Markers . . . . . off

   b. Press **BW, VID AVG ON,** 5, **Hz**. Press **TRACE, CLEAR WRITE A**. Wait until VAVG 5 is displayed above the graticule. Press **SGL SWP** and wait for completion of a new sweep. Press **MKR,** 30, **Hz**, **MKNOISE ON**. Read the marker amplitude.

   c. Add the appropriate noise marker amplitude correction indicated in step 5 to the marker amplitude (displayed in dBm/Hz) and record the result in Table 10-9 as the displayed average noise level at 30 Hz.

      Example: If the marker amplitude reads –102.6 dBm/Hz and RES BW is 1 Hz: Displayed average noise level = –102.6 dBm/Hz – 2.27 dB = –104.89 dBm

   d. If any of the displayed average noise level readings are within 1.10 dB of the appropriate specification, repeat the measurement in step b setting the number of video averages to 100.

   e. On the spectrum analyzer, press **FREQUENCY,** 1, **kHz**, **MKR**, **MARKERS OFF, TRIG**, **SWEEP CONT, TRACE**, **CLEAR WRITE A**.

ManualsPlus.com

f. Wait until VAVG 5 is displayed above the graticule. Press **SGL SWP** and wait for completion of a new sweep. Press **MKR**, 1, **kHz**, **MKNOISE ON**. Read the marker amplitude.

g. Add the appropriate noise marker amplitude correction indicated in step 5 to the marker amplitude (displayed in dBm/Hz) and record the result in Table 10-9 as the displayed average noise level at 1 kHz.

7. Set the spectrum analyzer controls as follows:

Center frequency . . . . . 10 kHz

Span (non-Option 103) . . . . . 375 Hz

Span (Option 103) . . . . . 1770 Hz

Resolution BW (non-Option 103) . . . . . 1 Hz

Resolution BW (Option 103) . . . . . 10 Hz

Reference level. . . . . –70 dBm

Markers . . . . . off

Trigger . . . . . Continuous

8. Press **BW, VID AVG ON**, 5, **Hz**, **TRACE**, **CLEAR WRITE A**. Wait until VAVG 5 is displayed above the graticule. Press **SGL SWP** and wait for completion of a new sweep. Press **MKR,** 10, **kHz**, **MKNOISE ON**. Read the marker amplitude.

9. Add the appropriate noise marker amplitude correction indicated in step 5 to the marker amplitude (displayed in dBm/Hz) and record the result in Table 10-9 as the displayed average noise level at 10 kHz.

10. On the spectrum analyzer, press **FREQUENCY,** 99, **kHz**, **MKR**, **MARKERS OFF, TRIG**, **SWEEP CONT**,**TRACE, CLEAR WRITE A**.

NOTE There is a residual response at 100 kHz. Tuning to 99 kHz to avoid displaying this response will yield a displayed average noise reading worse than the actual noise at 100 kHz.

11. Wait until VAVG 5 is displayed above the graticule. Press **SGL SWP** and wait for completion of a new sweep. Press **MKR**, 99, **kHz**, **MKNOISE ON**. Read the marker amplitude.

12. Add the appropriate noise marker amplitude correction indicated in step 5 to the marker amplitude (displayed in dBm/Hz) and record the result in Table 10-9 as the displayed average noise level at 100 kHz.

13. On the spectrum analyzer, press **FREQUENCY,** 1.02, **MHz**, **MKR**, **MARKERS OFF, TRIG, SWEEP CONT, TRACE, CLEAR WRITE A**.

ManualsPlus.com

NOTE There is a residual response at 1 MHz. Tuning to 1.02 MHz to avoid displaying this response will yield a displayed average noise reading worse than the actual noise at 1 MHz.

14. Wait until VAVG 5 is displayed above the graticule. Press **SGL SWP** and wait for completion of a new sweep. Press **MKR**, 1.02, **MHz**, **MKNOISE ON**. Read the marker amplitude.

15. Add the appropriate noise marker amplitude correction indicated in step 5 to the marker amplitude (displayed in dBm/Hz) and record the result in Table 10-9 as the displayed average noise level from 1 MHz to 10 MHz.

16. Set the spectrum analyzer controls as follows:

    Start frequency . . . . . 10 MHz

    Stop frequency . . . . . 2.9 GHz

    Markers . . . . . off

    Resolution BW . . . . . 1 MHz

    Video BW . . . . . 10 kHz

    Video average . . . . . off

17. Press **SGL SWP** and wait for a new sweep to finish. Press **MKR**, **MKNOISE ON**, **PEAK SEARCH**.

18. Press **MARKER→ CF**. Set the controls as follows:

    Span (non-Option 103) . . . . . 375 Hz

    Span (Option 103) . . . . . 1770 Hz

    Resolution BW (non-Option 103) . . . . . 1 Hz

    Resolution BW (Option 103) . . . . . 10 Hz

    Video BW . . . . . 1 Hz

    Video average . . . . . on

    Trigger . . . . . Continuous

19. Press **TRACE**, **CLEAR WRITE A**. Wait until VAVG 5 is played above the graticule. Press **SGL SWP** and wait for completion of a new sweep. Read the marker amplitude.

20. Add the appropriate noise marker amplitude correction indicated in step 5 to the marker amplitude (displayed in dBm/Hz) and record the result in Table 10-9 as the displayed average noise level from 10 MHz to 2.9 GHz.

ManualsPlus.com

Displayed Average Noise, Band 1

21. Set the spectrum analyzer controls as follows:

    Start frequency . . . . . 2.9 GHz

    Stop frequency . . . . . 6.46 GHz

    Markers . . . . . off

    Resolution BW . . . . . 1 MHz

    Video BW . . . . . 10 kHz

    Video average . . . . . off

22. Repeat steps 17 through 19.

23. Add the appropriate noise marker amplitude correction indicated in step 5 to the marker amplitude (displayed in dBm/Hz) and record the result in Table 10-9 as the displayed average noise level from 2.9 GHz to 6.46 GHz.

Displayed Average Noise, Band 2

24. Set the spectrum analyzer controls as follows:

    Start frequency . . . . . 6.46 GHz

    Stop frequency . . . . . 13.2 GHz

    Markers . . . . . off

    Resolution BW . . . . . 1 MHz

    Video BW . . . . . 10 kHz

    Video average . . . . . off

25. Repeat steps 17 through 19.

26. Add the appropriate noise marker amplitude correction indicated in step 5 to the marker amplitude (displayed in dBm/Hz) and record the result in Table 10-9 as the displayed average noise level from 6.46 GHz to 13.2 GHz.

ManualsPlus.com

Displayed Average Noise, Band 3, 13.2 GHz to 22 GHz

27. Set the spectrum analyzer controls as follows:

    Start frequency . . . . . 13.2 GHz

    Stop frequency . . . . . 22.0 GHz

    Markers . . . . . off

    Resolution BW . . . . . 1 MHz

    Video BW . . . . . 10 kHz

    Video average . . . . . off

28. Press **SGL SWP** and wait for a new sweep to finish. Press **MKR**, **MKNOISE ON**, **PEAK SEARCH**.

29. Press **MARKER→ CF**. Set the controls as follows:

    Span (non-Option 103) . . . . . 400 Hz

    Span (Option 103) . . . . . 1770 Hz

    Resolution BW (non-Option 103) . . . . . 1 Hz

    Resolution BW (Option 103) . . . . . 10 Hz

    Video BW . . . . . 1 Hz

    Video average . . . . . on

    Trigger . . . . . Continuous

30. Press **TRACE**, **CLEAR WRITE A**. Wait until VAVG 5 is displayed above the graticule. Press **SGL SWP** and wait for completion of a new sweep. Read the marker amplitude.

31. Add the appropriate noise marker amplitude correction indicated in step 5 to the marker amplitude (displayed in dBm/Hz) and record the result in Table 10-9 as the displayed average noise level from 13.2 GHz to 22.0 GHz.

Displayed Average Noise, Band 3, 22 GHz to 26.8 GHz

32. Set the spectrum analyzer controls as follows:

    Start frequency . . . . . 22.0 GHz

    Stop frequency . . . . . 26.8 GHz

    Markers . . . . . off

ManualsPlus.com

Resolution BW . . . . . 1 MHz

Video BW . . . . . 10 kHz

Video average . . . . . off

33. Repeat steps 28 through 30.

34. Add the appropriate noise marker amplitude correction indicated in step 5 to the marker amplitude (displayed in dBm/Hz) and record the result in Table 10-9 as the displayed average noise level from 22.0 GHz to 26.8 GHz.

Displayed Average Noise, Band 4, 26.8 GHz to 31.15 GHz

35. Set the spectrum analyzer controls as follows:

Start frequency . . . . . 26.8 GHz

Stop frequency . . . . . 31.15 GHz

Markers . . . . . off

Resolution BW . . . . . 1 MHz

Video BW . . . . . 10 kHz

Video average . . . . . off

36. Press **SGL SWP** and wait for a new sweep to finish. Press **MKR**, **MKNOISE ON, PEAK SEARCH**.

37. Press **MARKER→ CF**. Set the controls as follows:

Span (non-Option 103) . . . . . 400 Hz

Span (Option 103) . . . . . 1770 Hz

Resolution BW (non-Option 103) . . . . . 1 Hz

Resolution BW (Option 103) . . . . . 10 Hz

Video BW . . . . . 1 Hz

Video average . . . . . on

Trigger . . . . . Continuous

38. Press **TRACE**, **CLEAR WRITE A**. Wait until VAVG 5 is displayed above the graticule. Press **SGL SWP** and wait for completion of a new sweep. Read the marker amplitude.

39. Add the appropriate noise marker amplitude correction indicated in step 5 to the marker amplitude (displayed in dBm/Hz) and record the result in Table 10-9 as the displayed average noise level from 26.8 GHz to 31.15 GHz.

ManualsPlus.com

Displayed Average Noise, Band 4, 31.15 GHz to 40 GHz

40. Set the spectrum analyzer controls as follows:

    Reference level . . . . . –60 dBm

    Start frequency . . . . . 31.15 GHz

    Stop frequency . . . . . 40 GHz

    Markers . . . . . off

    Resolution BW . . . . . 1 MHz

    Video BW . . . . . 10 kHz

    Video average . . . . . off

41. Repeat steps 36 through 38.

42. Add the appropriate noise marker amplitude correction indicated in step 5 to the marker amplitude (displayed in dBm/Hz) and record the result in Table 10-9 as the displayed average noise level from 31.15 GHz to 40 GHz.

Table 10-9 Displayed Average Noise Level

Frequency	Displayed Average Noise Level (dBm)	Measurement Uncertainty (dB)
30 Hz*		+1.24/–1.37
1 kHz*		+1.24/–1.37
10 kHz		+1.24/–1.37
100 kHz		+1.24/–1.37
1 MHz to 10 MHz		+1.24/–1.37
10 MHz to 2.9 GHz		+1.24/–1.37
2.9 to 6.46 GHz		+1.24/–1.37
6.46 to 13.2 GHz		+1.24/–1.37
13.2 to 22.0 GHz		+1.24/–1.37
22.0 to 26.8 GHz		+1.24/–1.37
26.8 to 31.15 GHz		+1.24/–1.37
31.15 to 40 GHz		+1.24/–1.37
*The 30 Hz and 1 kHz measurements apply only to analyzers equipped with Option 006.		

ManualsPlus.com

10. Displayed Average Noise Level: Agilent 8565E/EC

Instrument Under Test

Agilent 8565E/EC

Related Specification

Displayed Average Noise Level

Related Adjustment

Frequency Response Adjustment

Description

This test measures the displayed average noise level from 9 kHz to 50 GHz (30 Hz to 50 GHz if analyzer has Option 006). The spectrum analyzer input is terminated in 50 ohms. In Band 0, the test first measures the average noise at several discrete frequencies in a narrow span. For the rest of Band 0, and all other bands, the test tunes the analyzer frequency across the band, uses the marker to locate the frequency with the highest response, then reads the average noise in a narrow span.

The noise marker is used to average several points around the frequency of interest. The noise marker also adds amplitude corrections for normalization to a 1 Hz noise bandwidth, log amplifier response, and envelope detector response. These corrections are not necessary and are subtracted out to determine the displayed average noise level.

Figure 10-10 Displayed Average Noise Test Setup

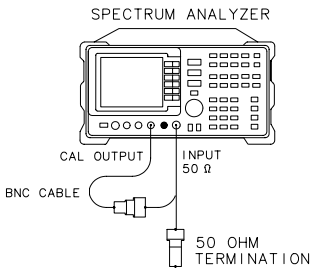

xj18e

ManualsPlus.com

Equipment

50 Ω termination . . . . . Agilent 85138B

Adapters

Type N (m) to BNC (f) 1250-1476

Type N (f) to 2.4 mm (f). . . . . Agilent 11903B

Cable

BNC, 122 cm (48 in.) . . . . . Agilent 10503A

Procedure

Displayed Average Noise, Band 0

1. Connect the CAL OUTPUT to INPUT 50 Ω. On the spectrum analyzer, press **PRESET, FREQUENCY**, 300, **MHz**. Set the controls as follows:

   Span . . . . . 100 Hz

   Reference level . . . . . –10 dBm

   Attenuation. . . . . .0 dB

   Resolution BW (non-Option 103). . . . . 1 Hz

   Resolution BW (Option 103) . . . . . 10 Hz

   Video BW . . . . . 1 Hz

2. Press **PEAK SEARCH, CAL, REF LVL ADJ**.
3. Use the knob or step keys to adjust the REF LVL ADJ number until the MKR amplitude is –10.00 dBm ±0.17 dB. Press **STORE REF LVL**.

NOTE There will be a delay in the response from changing the REF LVL ADJ value due to sweeps requiring several seconds to update.

4. Connect the Agilent 85138B 50 Ω termination to the spectrum analyzer INPUT 50 Ω as shown in Figure 10-10.
5. A noise marker reading is normalized to a 1 Hz noise bandwidth and has corrections added for the log amplifiers and envelope detector. These corrections should be removed. The appropriate correction is a

ManualsPlus.com

function of the resolution BW setting, as shown below. This amplitude correction will be made to each noise marker measurement.

RES BW	Noise Marker Amplitude Correction
1 Hz	–2.27 dB
10 Hz	+7.70 dB

6. If spectrum analyzer is an Option 006, do the following steps, (otherwise continue with step 7):

   a. Set the spectrum analyzer controls as follows:

      Reference level . . . . . –50 dBm

      Span (non-Option 103) . . . . . 375 Hz

      Span (Option 103). . . . . 300 Hz

      Resolution BW (non-Option 103). . . . . 1 Hz

      Resolution BW (Option 103) . . . . . 10 Hz

      Center frequency . . . . . 150 Hz

      Markers. . . . . off

   b. Press **BW, VID AVG ON,** 5, Hz. Press **TRACE**, **CLEAR WRITE A**. Wait until VAVG 5 is displayed above the graticule. Press **SGL SWP** and wait for completion of a new sweep. Press **MKR**, 30, **Hz**, **MKNOISE ON**. Read the marker amplitude.

   c. Add the appropriate noise marker amplitude correction indicated in step 5 to the marker amplitude (displayed in dBm/Hz) and record the result in Table 10-10 as the displayed average noise level at 30 Hz.

      Example: If the marker amplitude reads –102.6 dBm/Hz and RES BW is 1 Hz: Displayed average noise level = –102.6 dBm/Hz – 2.27 dB = –104.89 dBm

   d. If any of the displayed average noise level readings are within 1.10 dB of the appropriate specification, repeat the measurement in step b setting the number of video averages to 100.

   e. On the spectrum analyzer, press **FREQUENCY**, 1, **kHz**, **MKR**, **MARKERS OFF, TRIG, SWEEP CONT, TRACE, CLEAR WRITE A**.

   f. Wait until VAVG 5 is displayed above the graticule. Press **SGL SWP** and wait for completion of a new sweep. Press **MKR**, 1, **kHz**, **MKNOISE ON**. Read the marker amplitude.

ManualsPlus.com

g. Add the appropriate noise marker amplitude correction indicated in step 5 to the marker amplitude (displayed in dBm/Hz) and record the result in Table 10-10 as the displayed average noise level at 1 kHz.

7. Set the spectrum analyzer controls as follows:

Center frequency . . . . . 10 kHz

Span (non-Option 103). . . . . 375 Hz

Span (Option 103) . . . . . 1770 Hz

Resolution BW (non-Option 103). . . . . 1 Hz

Resolution BW (Option 103) . . . . . 10 Hz

Reference level . . . . . –70 dBm

Markers. . . . . off

Trigger . . . . . Continuous

8. Press **BW VID AVG ON** 5 Hz **TRACE CLEAR WRITE A**. Wait until VAVG 5 is displayed above the graticule. Press **SGL SWP** and wait for completion of a new sweep. Press **MKR** 10 kHz **MKNOISE ON**. Read the marker amplitude.

9. Add the appropriate noise marker amplitude correction indicated in step 5 to the marker amplitude (displayed in dBm/Hz) and record the result in Table 45, on page 591 as the displayed average noise level at 10 kHz.

10. On the spectrum analyzer, press **FREQUENCY** 99 kHz **MKR MARKERS OFF TRIG SWEEP CONT TRACE CLEAR WRITE A**.

NOTE There is a residual response at 100 kHz. Tuning to 99 kHz to avoid displaying this response will yield a displayed average noise reading worse than the actual noise at 100 kHz.

11. Wait until VAVG 5 is displayed above the graticule. Press **SGL SWP** and wait for completion of a new sweep. Press **MKR**, 99, **kHz**, **MKNOISE ON**. Read the marker amplitude.

12. Add the appropriate noise marker amplitude correction indicated in step 5 to the marker amplitude (displayed in dBm/Hz) and record the result in Table 10-10 as the displayed average noise level at 100 kHz.

13. On the spectrum analyzer, press **FREQUENCY,** 1.02, **MHz**, **MKR**, **MARKERS OFF, TRIG SWEEP, CONT, TRACE, CLEAR WRITE A**.

ManualsPlus.com

NOTE There is a residual response at 1 MHz. Tuning to 1.02 MHz to avoid displaying this response will yield a displayed average noise reading worse than the actual noise at 1 MHz.

14. Wait until VAVG 5 is displayed above the graticule. Press **SGL SWP** and wait for completion of a new sweep. Press **MKR,** 1.02, **MHz**, **MKNOISE ON**. Read the marker amplitude.

15. Add the appropriate noise marker amplitude correction indicated in step 5 to the marker amplitude (displayed in dBm/Hz) and record the result in Table 10-10 as the displayed average noise level from 1 MHz to 10 MHz.

16. Set the spectrum analyzer controls as follows:

    Start frequency . . . . . 10 MHz

    Stop frequency . . . . . 2.9 GHz

    Markers . . . . . off

    Resolution BW . . . . . 1 MHz

    Video BW . . . . . 10 kHz

    Video average . . . . . off

17. Press **SGL SWP** and wait for a new sweep to finish. Press **MKR**, **MKNOISE ON, PEAK SEARCH**.

18. Press **MARKER→ CF**. Set the controls as follows:

    Span (non-Option 103) . . . . . 375 Hz

    Span (Option 103) . . . . . 1770 Hz

    Resolution BW (non-Option 103) . . . . . 1 Hz

    Resolution BW (Option 103) . . . . . 10 Hz

    Video BW . . . . . 1 Hz

    Video average . . . . . on

    Trigger . . . . . Continuous

19. Press **TRACE**, **CLEAR WRITE A**. Wait until VAVG 5 is played above the graticule. Press **SGL SWP** and wait for completion of a new sweep. Read the marker amplitude.

20. Add the appropriate noise marker amplitude correction indicated in step 5 to the marker amplitude (displayed in dBm/Hz) and record the result in Table 10-10 as the displayed average noise level from 10 MHz to 2.9 GHz.

ManualsPlus.com

Displayed Average Noise, Band 1

21. Set the spectrum analyzer controls as follows:

    Start frequency . . . . . 2.9 GHz

    Stop frequency . . . . . 6.46 GHz

    Markers . . . . . off

    Resolution BW . . . . . 1 MHz

    Video BW . . . . . 10 kHz

    Video average . . . . . off

22. Repeat steps 17 through 19.

23. Add the appropriate noise marker amplitude correction indicated in step 5 to the marker amplitude (displayed in dBm/Hz) and record the result in Table 10-10 as the displayed average noise level from 2.9 GHz to 6.46 GHz.

Displayed Average Noise, Band 2

24. Set the spectrum analyzer controls as follows:

    Start frequency . . . . . 6.46 GHz

    Stop frequency . . . . . 13.2 GHz

    Markers . . . . . off

    Resolution BW . . . . . 1 MHz

    Video BW . . . . . 10 kHz

    Video average . . . . . off

25. Repeat steps 17 through 19.

26. Add the appropriate noise marker amplitude correction indicated in step 5 to the marker amplitude (displayed in dBm/Hz) and record the result in Table 10-10 as the displayed average noise level from 6.46 GHz to 13.2 GHz.

ManualsPlus.com

Displayed Average Noise, Band 3, 13.2 GHz to 22 GHz

27. Set the spectrum analyzer controls as follows:

    Start frequency . . . . . 13.2 GHz

    Stop frequency . . . . . 22.0 GHz

    Markers . . . . . off

    Resolution BW . . . . . 1 MHz

    Video BW . . . . . 10 kHz

    Video average . . . . . off

28. Press **SGL SWP** and wait for a new sweep to finish. Press **MKR**, **MKNOISE ON, PEAK SEARCH**.

29. Press **MARKER→ CF**. Set the controls as follows:

    Span (non-Option 103) . . . . . 400 Hz

    Span (Option 103) . . . . . 1770 Hz

    Resolution BW (non-Option 103) . . . . . 1 Hz

    Resolution BW (Option 103) . . . . . 10 Hz

    Video BW . . . . . 1 Hz

    Video average . . . . . on

    Trigger . . . . . Continuous

30. Press **TRACE**, **CLEAR WRITE A**. Wait until VAVG 5 is displayed above the graticule. Press **SGL SWP** and wait for completion of a new sweep. Read the marker amplitude.

31. Add the appropriate noise marker amplitude correction indicated in step 5 to the marker amplitude (displayed in dBm/Hz) and record the result in Table 10-10 as the displayed average noise level from 13.2 GHz to 22.0 GHz.

Displayed Average Noise, Band 3, 22 GHz to 26.8 GHz

32. Set the spectrum analyzer controls as follows:

    Start frequency . . . . . 22.0 GHz

    Stop frequency . . . . . 26.8 GHz

    Markers . . . . . off

ManualsPlus.com

Resolution BW . . . . . 1 MHz

Video BW . . . . . 10 kHz

Video average . . . . . off

33. Repeat steps 28 through 30.

34. Add the appropriate noise marker amplitude correction indicated in step 5 to the marker amplitude (displayed in dBm/Hz) and record the result in Table 10-10 as the displayed average noise level from 22.0 GHz to 26.8 GHz.

Displayed Average Noise, Band 4, 26.8 GHz to 31.15 GHz

35. Set the spectrum analyzer controls as follows:

Start frequency. . . . . .26.8 GHz

Stop frequency . . . . . .31.15 GHz

Markers. . . . . off

Resolution BW . . . . . 1 MHz

Video BW . . . . . 10 kHz

Video average . . . . . off

36. Press **SGL SWP** and wait for a new sweep to finish. Press **MKR**, **MKNOISE ON, PEAK SEARCH**.

37. Press **MARKER→ CF**. Set the controls as follows:

Span (non-Option 103). . . . . 400 Hz

Span (Option 103) . . . . . 1770 Hz

Resolution BW (non-Option 103). . . . . 1 Hz

Resolution BW (Option 103) . . . . . 10 Hz

Video BW . . . . . 1 Hz

Video average . . . . . on

Trigger . . . . . .Continuous

38. Press **TRACE**, **CLEAR WRITE A**. Wait until VAVG 5 is displayed above the graticule. Press **SGL SWP** and wait for completion of a new sweep. Read the marker amplitude.

39. Add the appropriate noise marker amplitude correction indicated in step 5 to the marker amplitude (displayed in dBm/Hz) and record the result in Table 10-10 as the displayed average noise level from 26.8 GHz to 31.15 GHz.

ManualsPlus.com

Displayed Average Noise, Band 4, 31.15 GHz to 40 GHz

40. Set the spectrum analyzer controls as follows:

    Reference level. . . . . –60 dBm

    Start frequency . . . . . 31.15 GHz

    Stop frequency. . . . . .40 GHz

    Markers . . . . . .off

    Resolution BW. . . . . 1 MHz

    Video BW . . . . . 10 kHz

    Video average . . . . . .off

41. Repeat steps 36 through 38.

42. Add the appropriate noise marker amplitude correction indicated in step 5 to the marker amplitude (displayed in dBm/Hz) and record the result in Table 10-10 as the displayed average noise level from 31.15 GHz to 40 GHz.

Displayed Average Noise, Band 4, 40 GHz to 50 GHz

43. Set the spectrum analyzer controls as follows:

    Reference level. . . . . –60 dBm

    Start frequency . . . . . .40 GHz

    Stop frequency. . . . . .50 GHz

    Markers . . . . . .off

    Resolution BW. . . . . 1 MHz

    Video BW . . . . . 10 kHz

    Video average . . . . . .off

44. Repeat steps 36 through 38.

45. Add the appropriate noise marker amplitude correction indicated in step 5 to the marker amplitude (displayed in dBm/Hz) and record the result in Table 10-10 as the displayed average noise level from 40 GHz to 50 GHz.

ManualsPlus.com

Table 10-10 Displayed Average Noise Level

Frequency	Displayed Average Noise Level (dBm)	Measurement Uncertainty (dB)
30 Hz*		+1.24/–1.37
1 kHz*		+1.24/–1.37
10 kHz		+1.24/–1.37
100 kHz		+1.24/–1.37
1 MHz to 10 MHz		+1.24/–1.37
10 MHz to 2.9 GHz		+1.24/–1.37
2.9 to 6.46 GHz		+1.24/–1.37
6.46 to 13.2 GHz		+1.24/–1.37
13.2 to 22.0 GHz		+1.24/–1.37
22.0 to 26.8 GHz		+1.24/–1.37
26.8 to 31.15 GHz		+1.24/–1.37
31.15 to 40 GHz		+1.24/–1.37
40 to 50 GHz		+1.24/–1.37
*The 30 Hz and 1 kHz measurements apply only to analyzers equipped with Option 006.		

ManualsPlus.com

11. Resolution Bandwidth Switching and IF Alignment Uncertainty

Instrument Under Test

All 8560 E-Series and EC-Series except Option EMI

Related Specifications

Resolution Bandwidth Switching Uncertainty
IF Alignment Uncertainty

Related Adjustment

There is no related adjustment procedure for this performance test.

Description

A signal source is applied to the input of the spectrum analyzer, and an amplitude reference is set with the RES BW at 300 kHz. At each of the analyzer resolution bandwidth settings, the amplitude of the source is adjusted to place the signal at the analyzer reference level. The source amplitude is compared with the amplitude at the analyzer 300 kHz RES BW setting. The difference between the settings equals the RES BW switching uncertainty. For the 300 Hz resolution bandwidth setting, the difference between settings equals the sum of the resolution bandwidth switching uncertainty and IF alignment uncertainty.

Figure 10-11 Resolution BW Switching and IF Alignment Uncertainty Test Setup

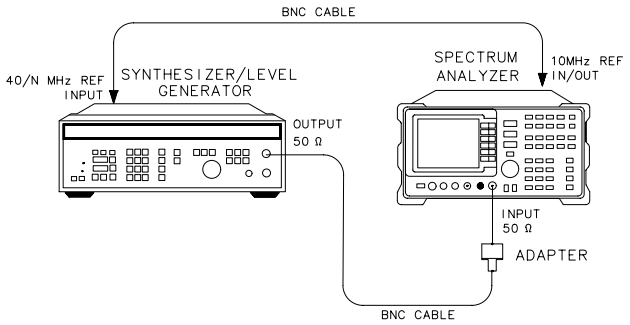

dp16e

ManualsPlus.com

Equipment

Frequency synthesizer . . . . . Agilent 3335A

Adapters

Type N (m) to BNC (f) 1250-1476

Type N (f) to 2.4 mm (f). . . . . Agilent 11903B

(*for Agilent 8564E/EC and Agilent 8565E/EC*)

Cable

BNC, 122 cm (48 in.) *(2 required)*. . . . . Agilent 10503A

Procedure

1. Connect the equipment as shown in Figure 10-11. The spectrum analyzer provides the frequency reference for the Agilent 3335A.
2. Set the Agilent 3335A controls as follows:

   Frequency . . . . . 50 MHz

   Amplitude . . . . . –5 dBm

   Amplitude increment . . . . . 0.01 dB
3. Press **PRESET**, **CAL, FULL IF ADJ** on the spectrum analyzer. Wait for the `IF ADJUST STATUS:` message to disappear, then set the controls as follows:

   Center frequency . . . . . 50 MHz

   Span . . . . . 1 MHz

   Log dB/division . . . . . 1 dB

   Resolution BW . . . . . 300 kHz
4. On the spectrum analyzer, press **CAL, IF ADJ OFF**. Press **PEAK SEARCH, MKR →**, **MARKER →**, **REF LVL**. Wait for the completion of a new sweep.
5. Press **PEAK SEARCH**, **MARKER DELTA**.
6. Set the spectrum analyzer controls as follows:

   Span . . . . . 10 MHz

   Resolution BW . . . . . 2 MHz

   Video BW/Resolution BW ratio 0.100

ManualsPlus.com

7. Press **CAL**, **ADJ CURR IF STATE**. Wait for the `IF ADJUST STATUS` message to disappear.
8. Press **PEAK SEARCH** on the spectrum analyzer.
9. Press **AMPLITUDE** on the Agilent 3335A, then use the INCR keys to adjust the amplitude until the marker amplitude displayed on the spectrum analyzer reads 0 dB ±0.05 dB.
10. Record the Agilent 3335A amplitude setting in Table 10-11.
11. Calculate the amplitude difference by subtracting the Agilent 3335A AMPLITUDE setting from –5 dBm. Record the result in the Amplitude Difference column of Table 10-11.

    Amplitude difference = –5 dBm – Agilent 3335A AMPLITUDE setting
12. Repeat steps 6 through 11 for the remaining spectrum analyzer SPAN and RES BW settings in Table 10-11. The 3 Hz and 1 Hz RES BW settings are not available in analyzers with Option 103.

Table 10-11 Resolution Bandwidth Switching and IF Alignment Uncertainty

Spectrum Analyzer Settings		Agilent 3335A Amplitude (dBm)	Amplitude Difference (dB)	Measurement Uncertainty (dB)
Span	Res BW			
1 MHz	300 kHz	–5 (Ref.)	0 (Ref.)	±0.037
10 MHz	2 MHz			±0.037
5 MHz	1 MHz			±0.037
500 kHz	100 kHz			±0.037
100 kHz	30 kHz			±0.037
50 kHz	10 kHz			±0.037
10 kHz	3 kHz			±0.037
5 kHz	1 kHz			±0.037
1 kHz	300 Hz			±0.037
500 Hz	100 Hz			±0.037
100 Hz	30 Hz			±0.037
100 Hz	10 Hz			±0.037
100 Hz	3 Hz*			±0.037
100 Hz	1 Hz*			±0.037

*These bandwidths are not available in spectrum analyzers with Option 103.

ManualsPlus.com

12. Resolution Bandwidth Accuracy and Selectivity

Instrument Under Test

All 8560 E-Series and EC-Series, except Option EMI

Related Specifications

Resolution Bandwidth Accuracy
Resolution Bandwidth Selectivity

Related Adjustment

There is no related adjustment procedure for this performance test.

Description

The output of a synthesizer is connected to the input of the spectrum analyzer. The spectrum analyzer is set to a span approximately twice the resolution bandwidth setting (for measuring the –3 dB bandwidth). The actual span error is determined by moving the synthesizer frequency and comparing the measured frequency difference to the actual difference between the two synthesizer frequencies.

The synthesizer output is then reduced in amplitude by 3 dB to determine the actual –3 dB point. A marker reference is set and the synthesizer output is increased by 3 dB to its previous level. A sweep is then taken and the markers are used to measure the 3 dB bandwidth. The measured bandwidth is then corrected for the span error and a percent error between the ideal bandwidth and the corrected bandwidth is calculated and recorded.

The span error is not measured in the narrower spans. To measure the span error accurately, the span-to-resolution bandwidth ratio should be approximately 100:1 with a resolution bandwidth ≥300 Hz. This criteria cannot be met in the narrower spans.

The –60 dB bandwidths are measured in a similar manner, with the span set to about 15 to 20 times the resolution bandwidth setting. The ratio between the –60 dB and –3 dB bandwidths is calculated and recorded.

RES BW settings ≤100 Hz are not measured. These bandwidths are digitally-derived; therefore, their accuracy and shape are guaranteed by design.

ManualsPlus.com

Figure 10-12 Resolution Bandwidth Accuracy and Selectivity Test Setup

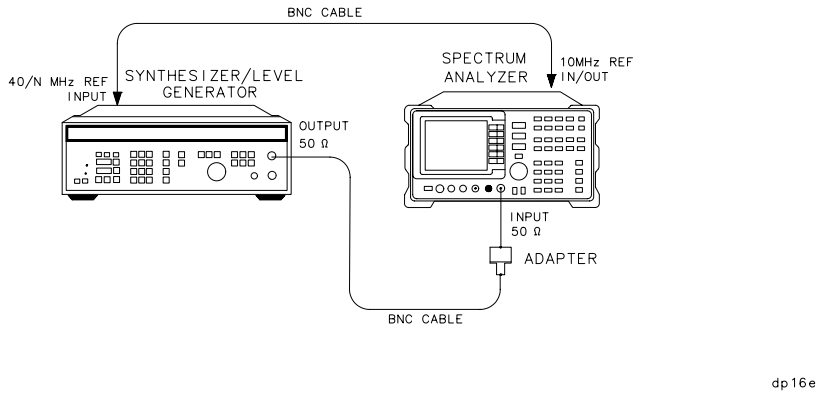

Equipment

Synthesizer/level generator . . . . . Agilent 3335A

Adapter

BNC (f) to type N (m) 1250-1476

Type N (f) to 2.4 mm (f) . . . . . Agilent 11903B

(*for Agilent 8564E/EC and Agilent 8565E/EC*)

Cable

BNC, 122 cm (48 in.) *(2 required)* . . . . . Agilent 10503A

Procedure

1. Connect the equipment as shown in Figure 10-12. The spectrum analyzer provides the frequency reference for the frequency synthesizer.
2. Set the Agilent 3335A controls as follows:

   Frequency . . . . . 40 MHz

   Amplitude . . . . . –5 dBm

   Amplitude increment . . . . . 1 dB

3. On the spectrum analyzer, press **PRESET**, **SAVE, SAVELOCK OFF, CAL**, **FULL IF ADJ**. Wait for the `IF ADJUST STATUS:` message to disappear. Press **IF ADJ OFF**. Set the controls as follows:

   Center frequency . . . . . 40 MHz

   Span . . . . . 4 MHz

ManualsPlus.com

Log dB/division . . . . . .1 dB

Resolution BW . . . . . .2 MHz

Video BW . . . . . 300 Hz

Resolution Bandwidth Accuracy

4. Adjust the Agilent 3335A output amplitude to place the signal two to three divisions (2 dB to 3 dB) below the reference level. Set the Agilent 3335A **AMPTD INCR** to 3 dB.
5. On the spectrum analyzer, press **CAL**, **ADJ CURR IF STATE**. Wait for the `IF ADJUST STATUS:` message to disappear before continuing.
6. If the RES BW setting is 3 kHz or less, proceed directly to step 13.
7. Set the Agilent 3335A frequency to F1 as indicated in Table 10-12 for the current RES BW setting of the analyzer.
8. Press **SAVE, SAVE STATE, STATE 0**, then press **AUTO COUPLE, ALL**, **PEAK SEARCH, MARKER DELTA** on the spectrum analyzer.
9. Set the Agilent 3335A frequency to F2 as indicated in Table 10-12 for the current RES BW setting of the analyzer.
10. Press **PEAK SEARCH** on the spectrum analyzer. Record the Δ MKR frequency reading as the actual SPAN measurement in Table 10-13 for the RES BW setting to be measured.
11. Press **RECALL**, **RECALL STATE, STATE 0** on the spectrum analyzer.
12. Set the Agilent 3335A frequency to 40 MHz.
13. Press **AMPLITUDE** ⇓ on the Agilent 3335A.
14. On the spectrum analyzer, press **PEAK SEARCH, MARKER DELTA**.
15. On the Agilent 3335A, press **AMPLITUDE,** ⇑.
16. On the spectrum analyzer, press **SGL SWP** and wait for the completion of a new sweep.
17. Press **MKR** on the spectrum analyzer. Rotate the RPG knob counterclockwise until the Δ MKR amplitude reads 0 dB ±0.017 dB. The marker should be on the left-hand skirt of the signal. If the marker cannot be set exactly to 0 dB, note whether the marker is just above or just below the actual –3 dB point.
18. Press **MARKER DELTA**, then rotate the RPG knob clockwise until the Δ MKR amplitude reads 0 dB ±0.017 dB. The active marker should be on the right-hand skirt of the signal. If the marker was set just above –3 dB in the previous step, set the marker just below the –3 dB point. If the marker was set just below the –3 dB point in the previous step, set the marker just above the –3 dB point.

ManualsPlus.com

19. If the RES BW setting is 3 kHz or less, record the Δ MKR frequency reading as the corrected –3 dB bandwidth in Table 10-13 and continue with step 23. It is not necessary to correct for span accuracy.

20. Record the Δ MKR frequency reading as the measured –3 dB bandwidth in Table 10-13 for the current RES BW setting.

21. Calculate the corrected –3 dB bandwidth as shown below and record the result in Table 10-13.

    Corrected –3 dB BW = (actual span / ideal span) × measured –3 dB BW

    Example:

    Resolution BW Setting = 1 MHz

    Ideal Span = 1.0 MHz

    Actual Span = 1.05 MHz

    Measured –3 dB BW = 913 kHz

    corrected –3 dB BW = (1.05/1.00) × 913 kHz = 958.65 kHz

22. Record the corrected –3 dB bandwidth in Table 10-13 for the current RES BW setting.

23. Calculate the 3 dB BW error shown below and record the result in Table 10-13 for the current RES BW setting.

    3 dB BW error = 100 × (corr'd –3 dB BW – RES BW setting)/RES BW setting

    Following the example above:

    3 dB BW error = 100 × (0.95865 MHz – 1.0 MHz RES BW setting)/1.0 MHz RES BW setting = –4.135%

24. On the spectrum analyzer, press **MKR**, **MARKERS OFF, TRIG**, **SWEEP CONT**.

25. Repeat steps 5 through 24 for the remaining RES BW and SPAN settings listed in Table 10-12 and Table 10-13.

Resolution Bandwidth Selectivity

26. Set the spectrum analyzer controls as follows:

    Span . . . . . 20 MHz

    Resolution BW . . . . . 2 MHz

    Video BW . . . . . 300 Hz

    Log dB/division . . . . . 10 dB

ManualsPlus.com

27. Set the Agilent 3335A as follows:

    Amplitude . . . . . –3 dBm

    Amplitude increment . . . . . 1 dB

28. On the spectrum analyzer, press **CAL, ADJ CURR IF STATE**. Wait for the `IF ADJUST STATUS:` message to disappear before continuing. Press **PEAK SEARCH**.

29. Adjust the Agilent 3335A AMPLITUDE until the spectrum analyzer MKR amplitude reads 0 dBm ±1.00 dB.

30. Set the Agilent 3335A **AMPTD INCR** to 60 dB.

31. Set the Agilent 3335A frequency to F1 as indicated in Table 10-14 for the current spectrum analyzer RES BW setting.

32. On the spectrum analyzer, press **SAVE**, **SAVE STATE, STATE 0, AUTO COUPLE, ALL**. If the RES BW setting is now less than 300 Hz, press **BW** 300 Hz.

33. Press **PEAK SEARCH**, **MARKER DELTA**.

34. Set the Agilent 3335A frequency to F2 as indicated in Table 10-14 for the current spectrum analyzer RES BW setting.

35. Press **PEAK SEARCH** on the spectrum analyzer. Record the Δ MKR frequency as the Actual SPAN Measurement in Table 10-15 for the current RES BW setting.

36. On the spectrum analyzer, press **RECALL**, **RECALL STATE**, **STATE 0**.

37. Set the Agilent 3335A frequency to 40 MHz.

38. Press **AMPLITUDE** ⇓ on the Agilent 3335A.

39. On the spectrum analyzer, press **PEAK SEARCH, MARKER DELTA**.

40. On the Agilent 3335A, press **AMPLITUDE,** ⇑.

41. On the spectrum analyzer, press **SGL SWP** and wait for the completion of a new sweep.

42. Press **MKR** on the spectrum analyzer. Rotate the RPG knob counterclockwise until the Δ MKR amplitude reads 0 dB ±0.50 dB. The marker should be on the left-hand skirt of the signal. If the marker cannot be set to exactly 0 dB, note whether the marker is just above or just below the actual –60 dB point.

43. Press **MARKER DELTA** on the spectrum analyzer. Rotate the RPG knob clockwise until the Δ MKR amplitude reads 0 dB ±0.50 dB. The active marker should be on the right-hand skirt of the signal. If the marker was set just above the –60 dB point in the previous step, set the marker just below the –60 dB point. If the marker was set just below the –60 dB point in the preceding step, set the marker just above the –60 dB point.

ManualsPlus.com

44. Record the Δ MKR reading as the Measured –60 dB bandwidth in Table 10-15 for the current RES BW setting.

45. Calculate the corrected –60 dB bandwidth as shown below, then record the result in Table 10-15.

    corrected –60 dB BW = (actual span/ideal span) × measured –60 dB BW

    Example:

    RES BW setting = 1 MHz

    Ideal span = 16 MHz

    Actual span = 17 MHz

    Measured –60 dB BW = 9.82 MHz

    Corrected –60 dB BW = (17/16) × 9.82 MHz = 10.43 MHz

46. Record the corrected –60 dB BW in Table 10-15 for the current RES BW setting.

47. Calculate the selectivity by dividing the corrected –60 dB BW by the corrected –3 dB BW (from Table 10-13), then record the result in Table 10-15.

    Selectivity = corrected –60 dB BW / corrected –3 dB BW

    Example:

    Selectivity = 10.43 MHz / 0.9415 MHz = 11.08

48. Press **MKR**, **MARKERS OFF, TRIG**, **SWEEP CONT** on the spectrum analyzer.

49. Repeat steps 28 through 47 for the remaining RES BW and SPAN settings listed in Table 10-14 and Table 10-15.

ManualsPlus.com

Table 10-12 –3 dB Bandwidth Instrument Settings

Spectrum Analyzer Settings		Agilent 3335A Frequencies		Measurement Uncertainty (%)
RES BW	SPAN	F1 (MHz)	F2 (MHz)	
2 MHz	4 MHz	39.0	41.0	±1.34
1 MHz	2 MHz	39.5	40.5	±1.34
300 kHz	500 kHz	39.85	40.15	±1.34
100 kHz	200 kHz	39.95	40.05	±1.34
30 kHz	50 kHz	39.985	40.015	±1.34
10 kHz	20 kHz	39.995	40.005	±1.34
3 kHz	5 kHz	N/A	N/A	±1.34
1 kHz	2 kHz	N/A	N/A	±1.34
300 Hz	600 Hz	N/A	N/A	±1.34

Table 10-13 –3 dB Bandwidth Measurement Data

RES BW Setting	Span Measurement		–3 dB BW Measurement		3 dB BW Error (%)
	Ideal	Actual	Measured	Corrected	
2 MHz	2 MHz	MHz			
1 MHz	1.0 MHz	MHz			
300 kHz	300 kHz	kHz			
100 kHz	100 kHz	kHz			
30 kHz	30 kHz	kHz			
10 kHz	10 kHz	kHz			
3 kHz*	N/A	N/A			
1 kHz*	N/A	N/A			
300 Hz*	N/A	N/A			
*Span Error Measurement not required for RES BW settings of 3 kHz and less.					

ManualsPlus.com

Table 10-14 –60 dB Bandwidth Instrument Settings

Spectrum Analyzer Settings		Agilent 3335A Frequencies		Measurement Uncertainty (%)
RES BW	SPAN	F1 (MHz)	F2 (MHz)	
2 MHz	20 MHz	35.0	45.0	±0.98
1 MHz	20 MHz	32.0	48.0	±0.98
300 kHz	5 MHz	38.0	42.0	±0.98
100 kHz	2 MHz	39.2	40.8	±0.98
30 kHz	500 kHz	39.8	40.2	±0.98
10 kHz	200 kHz	39.92	40.08	±0.98
3 kHz	50 kHz	39.98	40.02	±0.98
1 kHz	20 kHz	39.992	40.008	±0.98
300 Hz	5 kHz	39.998	40.002	±0.98

Table 10-15 –60 dB Bandwidth Measurement Data

RES BW Setting	Span Measurement		–60 dB Bandwidth		Selectivity
	Ideal	Actual	Measured	Corrected	
2 MHz	10 MHz	MHz			
1 MHz	16 MHz	MHz			
300 kHz	4 MHz	MHz			
100 kHz	1.6 MHz	MHz			
30 kHz	400 kHz	kHz			
10 kHz	160 kHz	kHz			
3 kHz	40 kHz	kHz			
1 kHz	16 kHz	kHz			
300 Hz	4 kHz	kHz			

ManualsPlus.com

13. Input Attenuator Switching Uncertainty: 8560E/EC, Agilent 8561E/EC, Agilent 8562E/EC/, Agilent 8563E/EC

Instrument Under Test

8560E/EC
Agilent 8561E/EC
Agilent 8562E/EC
Agilent 8563E/EC

Related Specification

Input Attenuator Switching Uncertainty

Related Adjustment

There is no related adjustment procedure for this performance test.

Description

This test measures the input attenuator switching uncertainty over the full 70 dB range at 50 MHz. The synthesizer/level generator is phase-locked to the spectrum analyzer 10 MHz reference. Switching uncertainty is referenced to the 10 dB attenuator setting. The attenuator in the synthesizer/level generator is the measurement standard.

The input attenuator switching uncertainty at 2.9 GHz is measured using IF substitution. The IF gains are characterized at 50 MHz.

Figure 10-13 Input Attenuator Test Setup, 50 MHz

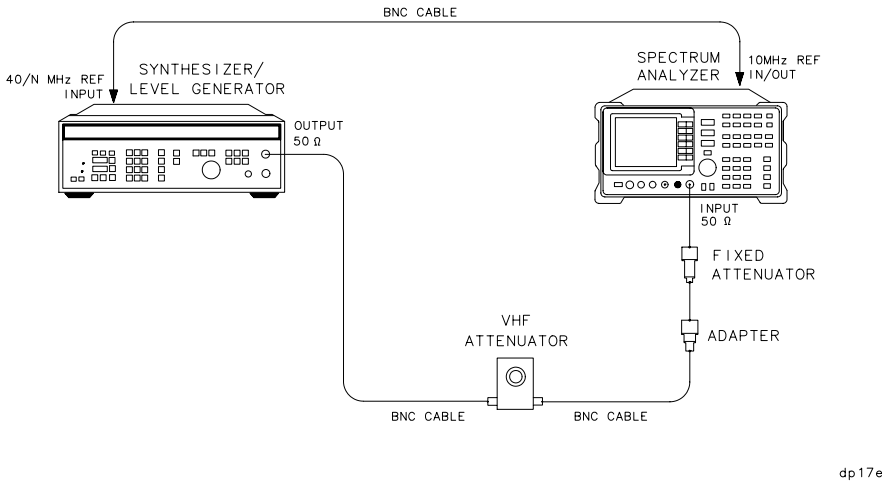

ManualsPlus.com

Figure 10-14 Input Attenuator Test Setup, >50 MHz

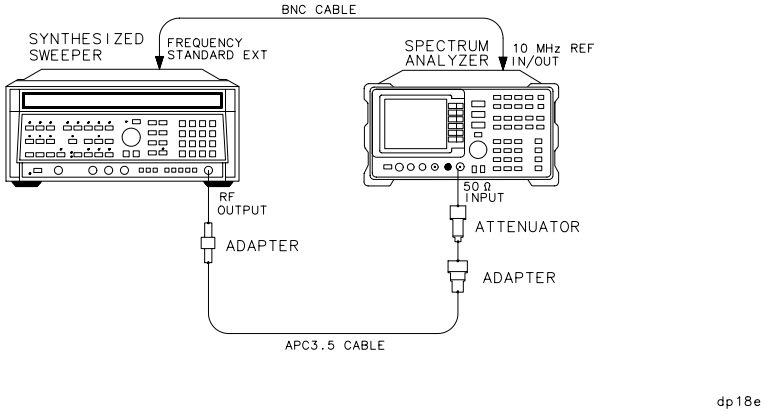

Equipment

Synthesized sweeper . . . . . .Agilent 8340A/B

Synthesizer/level generator . . . . . Agilent 3335A

20 dB coaxial fixed attenuator. . . . . .Agilent 8491B (Option 020)

10 dB coaxial fixed attenuator. . . . . .Agilent 8491B (Option 010)

1 dB VHF step attenuator . . . . . Agilent 355C

Adapters

Type N (m) to BNC (f) 1250-1476

Type N (m) to APC 3.5 (f). 1250-1744

APC 3.5 (f) to APC 3.5 (f) 5061-5311

Cables

BNC, 122 cm (48 in.) *(3 required)* . . . . . Agilent 10503A

SMA, 61 cm (24 in.) 8120-1578

Procedure

Attenuator Switching Uncertainty

1. Connect the equipment as shown in Figure 10-13 using the Agilent 8491B Option 020. The spectrum analyzer provides the frequency reference for the Agilent 3335A.

ManualsPlus.com

2. Set the Agilent 3335A controls as follows:

   Frequency . . . . . 50 MHz

   Amplitude . . . . . –50 dBm

   Amplitude increment . . . . . 10 dB

   Output . . . . . 50 Ω

3. On the spectrum analyzer, press **PRESET, CAL, REALIGN LO &IF**. Wait for adjustments to complete. Then, set the controls as follows:

   Center frequency . . . . . 50 MHz

   Span . . . . . 0 Hz

   Reference level . . . . . –70 dBm

   Log dB/division . . . . . 1 dB

   Resolution BW . . . . . 3 kHz

   Video BW . . . . . 1 Hz

4. Set the Agilent 355C to 0 dB.

5. Adjust the Agilent 355C step attenuator to place the peak of the signal two to three divisions below the spectrum analyzer reference level.

6. On the spectrum analyzer, press **SGL SWP**, **SGL SWP**.

7. Wait for a new sweep to finish. Press **MKR**, **MARKER DELTA**.

8. Set the Agilent 3335A amplitude as indicated in row 2 of Table 10-16 by pressing **AMPLITUDE** and entering the next dBm value.

9. On the spectrum analyzer, set **AMPLITUDE, REF LVL,** 60, –**dBm, ATTEN**, 20, **dB** as indicated in row 2 of Table 10-16.

10. On the spectrum analyzer, press **SGL SWP**.

11. Wait for a sweep to finish. Record the Δ MKR amplitude in Table 10-16 as the actual Δ MKR reading.

12. Repeat steps 8 through 11 for each row of instrument settings in Table 10-16.

13. For each attenuator setting other than 10 dB, subtract the actual Δ MKR reading from the ideal Δ MKR reading in Table 10-16 and record the result as the cumulative switching uncertainty (CSU).

    CSU = ideal Δ MKR reading – actual Δ MKR reading

ManualsPlus.com

14. For attenuator settings from 20 through 70 dB, subtract the CSU value of the preceding setting from the current CSU value and record the result in Table 10-16 as the incremental switching uncertainty.

    Incremental switching uncertainty = current CSU – previous CSU

15. Set the Agilent 3335A controls as follows:

    Frequency . . . . . 50 MHz

    Amplitude . . . . . +5 dBm

    Amplitude increment . . . . . 10 dB

    Output . . . . . 50 Ω

16. On the spectrum analyzer, press **PRESET**, **CAL, REALIGN LO AND IF**. Wait for adjustments to complete. Then, set the controls as follows:

    Center frequency . . . . . 50 MHz

    Span . . . . . 0 Hz

    Reference level. . . . . –10 dBm

    Attenuation . . . . . 0 dB

    Log dB/division . . . . . 1 dB

    Resolution BW . . . . . 1 kHz

    Video BW . . . . . 1 Hz

17. Set the Agilent 355C to 5 dB and replace the Agilent 8491B Option 020 with the Agilent 8491B Option 010 10 dB attenuator.

18. Adjust the Agilent 355C to place the signal two to three divisions below the reference level.

19. On the spectrum analyzer, press **MKR**, **MARKER DELTA**.

20. Set the Agilent 3335A **AMPLITUDE** and the spectrum analyzer **REF LVL** according to Table 10-17. Record the spectrum analyzer Δ MKR reading for each setting as the actual Δ MKR reading.

21. For each row in Table 10-17, subtract the ideal Δ MKR reading from the actual Δ MKR reading. Record the result as the IF gain deviation.

ManualsPlus.com

Calculating IF Gain Correction

22. Calculate and record the IF gain correction factors in Table 10-18 as described in the following steps:

    a. For each IF gain correction entry, there is a pair of numbers in parentheses. These numbers represent spectrum analyzer REF LVL settings from Table 10-17.

    b. Look up the IF gain deviation values in Table 10-17 that correspond to these REF LVL settings.

    c. Substitute test values for the numbers in parentheses in the IF gain correction entry and calculate the correction value. As an example, when calculating Table 10-18 IF gain correction for the 20 dB ATTEN setting, look up the IF gain deviation values listed in Table 10-17 for the –30 and –20 dBm REF LVL settings.

    d. If the IF gain deviation for the –30 dBm REF LVL is +0.2 dB and the IF gain deviation for the –20 dBm REF LVL is –0.3 dB, then the IF gain correction for the 20 dB ATTEN setting is:

    (+0.2) – (–0.3) = +0.5 dB

Input Attenuator Switching Uncertainty, 2.9 GHz

23. Connect the equipment as shown in Figure 10-14 using the Agilent 8491B Option 010 10 dB attenuator. The spectrum analyzer provides the frequency reference for the Agilent 8340A/B.

24. On the spectrum analyzer, press **FREQUENCY**, 2.9, **GHz**.

25. On the spectrum analyzer, press **AMPLITUDE,** 10, –**dBm, ATTEN,** 10, **+dBm**, **MKR, MARKERS OFF**.

26. On the Agilent 8340A/B, press **INSTR PRESET** and set the controls as follows:

    CW frequency . . . . . .2.9 GHz

    Power level . . . . . 0 dBm

27. On the spectrum analyzer, press **MKR**.

28. Adjust the Agilent 8340A/B **POWER LEVEL** for a spectrum analyzer MKR amplitude reading of –13 dBm ±0.05 dB.

29. On the spectrum analyzer press **MKR**, **MARKER DELTA**, **AMPLITUDE, ATTEN,** 20, **dB**.

ManualsPlus.com

30. After a new sweep has finished, record the spectrum analyzer Δ MKR amplitude reading in Table 10-18 as the Δ MKR Reading (column 2).

31. Set the spectrum analyzer **ATTEN** to the settings indicated in Table 10-18. Repeat step 30 for each ATTEN setting.

32. For each ATTEN setting in Table 10-18, subtract the IF gain correction from the Δ MKR reading (column 2) and record the result as the CSU.

33. For each attenuator setting from 20 through 70 dB, subtract the CSU value of the preceding setting from the current CSU value and record the result in Table 10-18 as the incremental switching uncertainty.

    Incremental switching uncertainty = current CSU – previous CSU

Table 10-16 Input Attenuator Switching Accuracy, 50 MHz

Agilent 3335A Amplitude (dBm)	Spectrum Analyzer		Δ MKR Reading		Cumulative Switching Uncertainty (dB)	Incremental Switching Uncertainty (dB)	Measurement Uncertainty (dB)
	REF LVL (dBm)	ATTEN (dB)	Ideal (dB)	Actual (dB)			
–50	–70	10	0 (Ref.)	0 (Ref.)	0 (Ref.)	0 (Ref.)	0 (Ref.)
–40	–60	20	+10				±0.178
–30	–50	30	+20				±0.178
–20	–40	40	+30				±0.178
–10	–30	50	+40				±0.178
0	–20	60	+50				±0.178
+10	–10	70	+60				±0.178

ManualsPlus.com

Table 10-17 IF Gain Deviation

Spectrum Analyzer Ref Lvl (dBm)	Agilent 3335A Amplitude (dBm)	Δ MKR Reading		IF Gain Deviation (dB)
		Actual (dB)	Ideal (dB)	
–10	+5	0 (Ref.)	0 (Ref.)	0 (Ref.)
–20	–5		–10	
–30	–15		–20	
–40	–25		–30	
–50	–35		–40	
–60	–45		–50	
–70	–55		–60	
–80	–65		–70	

Table 10-18 Input Attenuator Switching Uncertainty, 2.9 GHz

Spectrum Analyzer ATTEN (dB)	Δ MKR Reading (dB)	IF Gain Correction (dB)		Cumulative Switching Uncertainty (dB)	Incremental Switching Uncertainty (dB)	Measurement Uncertainty (dB)
10	0 (Ref.)	0 (Ref.)		0 (Ref.)	0 (Ref.)	0 (Ref.)
20			[(–30)– (–20)]			±0.23
30			[(–40)– (–20)]			±0.23
40			[(–50)– (–20)]			±0.23
50			[(–60)– (–20)]			±0.23
60			[(–70)– (–20)]			±0.24
70			[(–80)– (–20)]			±0.24

ManualsPlus.com

14. Input Attenuator Switching Uncertainty: Agilent 8564E/EC, Agilent 8565E/EC

Instrument Under Test

Agilent 8564E/EC
Agilent 8565E/EC

Related Specification

Input Attenuator Switching Uncertainty

Related Adjustment

There is no related adjustment procedure for this performance test.

Description

This test measures the input attenuator switching uncertainty over the full 60 dB range at 50 MHz. The synthesizer/level generator is phase-locked to the spectrum analyzer 10 MHz reference. Switching uncertainty is referenced to the 10 dB attenuator setting. The attenuator in the synthesizer/level generator is the measurement standard.

The input attenuator switching uncertainty at 2.9 GHz is measured using IF substitution. The IF gains are characterized at 50 MHz.

Figure 10-15 Input Attenuator Test Setup, 50 MHz

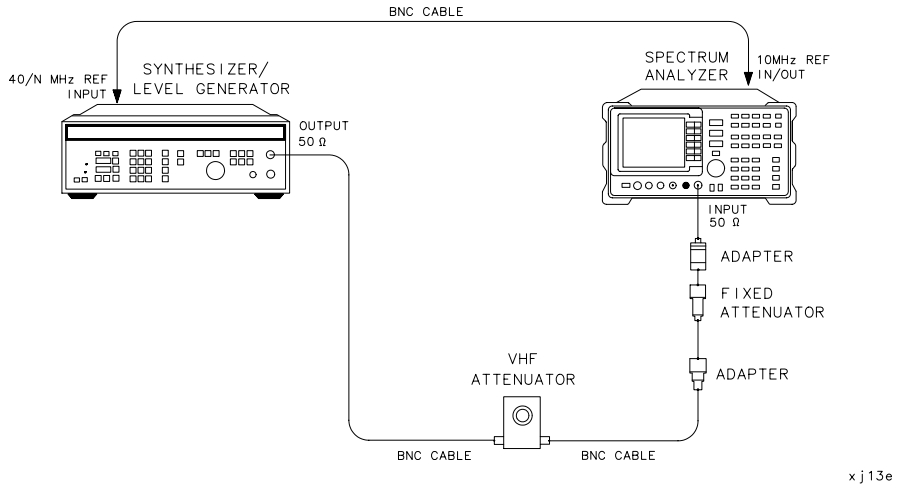

ManualsPlus.com

Figure 10-16 Input Attenuator Test Setup, >50 MHz

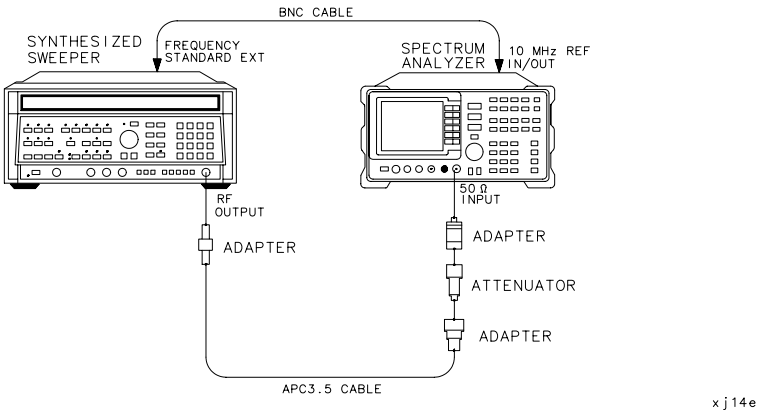

Equipment

Synthesized sweeper . . . . . Agilent 8340A/B

Synthesizer/level generator . . . . . Agilent 3335A

20 dB coaxial fixed attenuator . . . . . Agilent 8491B (Option 020)

10 dB coaxial fixed attenuator . . . . . Agilent 8491B (Option 010)

1 dB VHF step attenuator . . . . . Agilent 355C

Adapters

Type N (m) to BNC (f) 1250-1476

Type N (m) to APC 3.5 (f) 1250-1744

APC 3.5 (f) to APC 3.5 (f) 5061-5311

Type N (f) to 2.4 mm (f) . . . . . Agilent 11903B

Cables

BNC, 122 cm (48 in.) *(3 required)* . . . . . Agilent 10503A

SMA, 61 cm (24 in.) 8120-1578

Procedure

Attenuator Switching Uncertainty

1. Connect the equipment as shown in Figure 10-15 using the Agilent 8491B Option 020. The spectrum analyzer provides the frequency reference for the Agilent 3335A.

ManualsPlus.com

2. Set the Agilent 3335A controls as follows:

   Frequency . . . . . 50 MHz

   Amplitude . . . . . –50 dBm

   Amplitude increment . . . . . 10 dB

   Output . . . . . 50 Ω

3. On the spectrum analyzer, press **PRESET**, **CAL, REALIGN LO &IF**. Wait for adjustments to complete. Then, set the controls as follows:

   Center frequency . . . . . 50 MHz

   Span . . . . . 0 Hz

   Reference level. . . . . –70 dBm

   Log dB/division . . . . . 1 dB

   Resolution BW . . . . . 3 kHz

   Video BW . . . . . 1 Hz

4. Set the Agilent 355C to 0 dB.

5. Adjust the Agilent 355C step attenuator to place the peak of the signal two to three divisions below the spectrum analyzer reference level.

6. On the spectrum analyzer, press **SGL SWP**, **SGL SWP**.

7. Wait for a new sweep to finish. Press **MKR, MARKER DELTA**.

8. Set the Agilent 3335A amplitude as indicated in row 2 of Table 10-19 by pressing **AMPLITUDE** and entering the next dBm value.

9. On the spectrum analyzer, set **AMPLITUDE REF LVL** 60 –**dBm ATTEN** 20 **dB** as indicated in row 2 of Table 10-19.

10. On the spectrum analyzer, press **SGL SWP**.

11. Wait for a sweep to finish. Record the Δ MKR amplitude in Table 10-19 as the actual Δ MKR reading.

12. Repeat steps 8 through 11 for each row of instrument settings in Table 10-19.

13. For each attenuator setting other than 10 dB, subtract the actual Δ MKR reading from the ideal Δ MKR reading in Table 10-19 and record the result as the cumulative switching uncertainty (CSU).

    CSU = ideal Δ MKR reading – actual Δ MKR reading

ManualsPlus.com

14. For attenuator settings from 20 through 60 dB, subtract the CSU value of the preceding setting from the current CSU value and record the result in Table 10-19 as the incremental switching uncertainty.

    Incremental switching uncertainty = current CSU – previous CSU

15. Set the Agilent 3335A controls as follows:

    Frequency . . . . . 50 MHz

    Amplitude . . . . . +5 dBm

    Amplitude increment . . . . . 10 dB

    Output . . . . . 50 Ω

16. On the spectrum analyzer, press **PRESET**, **CAL**, **REALIGN LO AND IF**. Wait for adjustments to complete. Then, set the controls as follows:

    Center frequency . . . . . 50 MHz

    Span . . . . . 0 Hz

    Reference level . . . . . –10 dBm

    Attenuation . . . . . 0 dB

    Log dB/division . . . . . 1 dB

    Resolution BW . . . . . 1 kHz

    Video BW . . . . . 1 Hz

17. Set the Agilent 355C to 5 dB and replace the Agilent 8491B Option 020 with the Agilent 8491B Option 010 10 dB attenuator.

18. Adjust the Agilent 355C to place the signal two to three divisions below the reference level.

19. On the spectrum analyzer, press **MKR, MARKER DELTA**.

20. Set the Agilent 3335A **AMPLITUDE** and the spectrum analyzer **REF LVL** according to Table 10-20. Record the spectrum analyzer Δ MKR reading for each setting as the actual Δ MKR reading.

21. For each row in Table 10-20, subtract the ideal Δ MKR reading from the actual Δ MKR reading. Record the result as the IF gain deviation.

ManualsPlus.com

Calculating IF Gain Correction

22. Calculate and record the IF gain correction factors in Table 10-21 as described in the following steps:

    a. For each IF gain correction entry, there is a pair of numbers in parentheses. These numbers represent spectrum analyzer REF LVL settings from Table 10-20.

    b. Look up the IF gain deviation values in Table 10-20 that correspond to these REF LVL settings.

    c. Substitute test values for the numbers in parentheses in the IF gain correction entry and calculate the correction value. As an example, when calculating Table 10-21 IF gain correction for the 20 dB ATTEN setting, look up the IF gain deviation values listed in Table 10-20 for the –30 and –20 dBm REF LVL settings.

    d. If the IF gain deviation for the –30 dBm REF LVL is +0.2 dB and the IF gain deviation for the –20 dBm REF LVL is –0.3 dB, then the IF gain correction for the 20 dB ATTEN setting is:

    $$(+0.2) - (-0.3) = +0.5 \text{ dB}$$

Input Attenuator Switching Uncertainty, 2.9 GHz

23. Connect the equipment as shown in Figure 10-16 using the Agilent 8491B Option 010 10 dB attenuator. The spectrum analyzer provides the frequency reference for the Agilent 8340A/B.

24. On the spectrum analyzer press, **FREQUENCY**, 2.9, **GHz**.

25. On the spectrum analyzer press, **AMPLITUDE**, 10, –**dBm, ATTEN,** 10, **+dBm**, **MKR**, **MARKERS OFF**.

26. On the Agilent 8340A/B, press **INSTR PRESET** and set the controls as follows:

    CW frequency . . . . . 2.9 GHz

    Power level. . . . . 0 dBm

27. On the spectrum analyzer press **MKR**.

28. Adjust the Agilent 8340A/B **POWER LEVEL** for a spectrum analyzer MKR amplitude reading of –13 dBm ±0.05 dB.

29. On the spectrum analyzer press **MKR**, **MARKER DELTA**, **AMPLITUDE, ATTEN,** 20, **dB**.

ManualsPlus.com

30. After a new sweep has finished, record the spectrum analyzer Δ MKR amplitude reading in Table 10-21 as the Δ MKR Reading (column 2).

31. Set the spectrum analyzer **ATTEN** to the settings indicated in Table 10-21. Repeat step 30 for each ATTEN setting.

32. For each ATTEN setting in Table 10-21, subtract the IF gain correction from the Δ MKR reading (column 2) and record the result as the CSU.

33. For each attenuator setting from 20 through 60 dB, subtract the CSU value of the preceding setting from the current CSU value and record the result in Table 10-21 as the incremental switching uncertainty.

    Incremental switching uncertainty = current CSU – previous CSU

Table 10-19 Input Attenuator Switching Accuracy, 50 MHz

Agilent 3335A Amplitude (dBm)	Spectrum Analyzer		Δ MKR Reading		Cumulative Switching Uncertainty (dB)	Incremental Switching Uncertainty (dB)	Measurement Uncertainty (dB)
	REF LVL (dBm)	ATTEN (dB)	Ideal (dB)	Actual (dB)			
–50	–70	10	0 (Ref.)	0 (Ref.)	0 (Ref.)	0 (Ref.)	0 (Ref.)
–40	–60	20	+10				±0.178
–30	–50	30	+20				±0.178
–20	–40	40	+30				±0.178
–10	–30	50	+40				±0.178
0	–20	60	+50				±0.178

Table 10-20 IF Gain Deviation

Spectrum Analyzer Ref Lvl (dBm)	Agilent 3335A Amplitude (dBm)	Δ MKR Reading		IF Gain Deviation (dB)
		Actual (dB)	Ideal (dB)	
–10	+5	0 (Ref.)	0 (Ref.)	0 (Ref.)
–20	–5		–10	
–30	–15		–20	
–40	–25		–30	
–50	–35		–40	
–60	–45		–50	
–70	–55		–60	

ManualsPlus.com

Table 10-21 Input Attenuator Switching Uncertainty, 2.9 GHz

Spectrum Analyzer ATTEN (dB)	Δ MKR Reading (dB)	IF Gain Correction (dB)		Cumulative Switching Uncertainty (dB)	Incremental Switching Uncertainty (dB)	Measurement Uncertainty (dB)
10	0 (Ref.)	0 (Ref.)		0 (Ref.)	0 (Ref.)	0 (Ref.)
20			[(–30)– (–20)]			±0.23
30			[(–40)– (–20)]			±0.23
40			[(–50)– (–20)]			±0.23
50			[(–60)– (–20)]			±0.23
60			[(–70)– (–20)]			±0.24

ManualsPlus.com

15. IF Gain Uncertainty

Instrument Under Test

All 8560 E-Series and EC-Series

Related Specification

IF Gain Uncertainty

Related Adjustment

IF Amplitude Adjustment

Description

This test measures the log (10 dB and 1 dB) and linear IF gain uncertainties. A 0 dBm signal is displayed near the reference level for each test. The input signal level is decreased as the spectrum analyzer reference level is decreased (IF gain increased). Since the signal level decreases in accurate steps, any error between the reference level and the signal level is caused by the analyzer IF gain. The frequency synthesizer is phase-locked to the spectrum analyzer 10 MHz reference.

Figure 10-17 IF Gain Uncertainty Test Setup

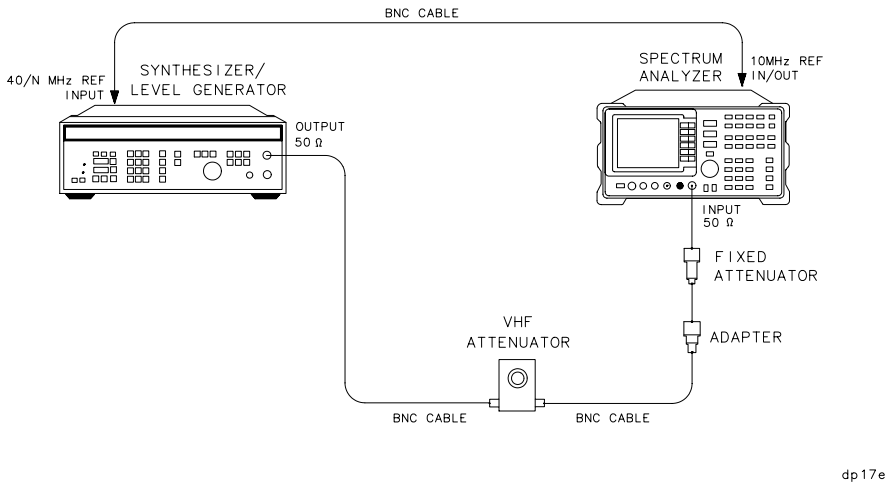

Equipment

Frequency synthesizer . . . . . Agilent 3335A

10 dB coaxial fixed attenuator . . . . . Agilent 8491B, Option 010

1 dB VHF step attenuator . . . . . Agilent 355C

ManualsPlus.com

Adapter

Type N (m) to BNC (f) 1250-1476

Type N (f) to 2.4 mm (f) . . . . . Agilent 11903B

(*for Agilent 8564E/EC and Agilent 8565E/EC*)

Cable

BNC, 122 cm (48 in.) *(3 required)* . . . . . Agilent 10503A

Procedure

1. Connect the equipment as shown in Figure 10-17. The spectrum analyzer under test provides the frequency reference for the Agilent 3335A.

Log Gain Uncertainty (10 dB Steps)

2. Set the Agilent 3335A controls as follows:

   Frequency . . . . . 50 MHz

   Amplitude . . . . . +10 dB

   Amplitude increment . . . . . 10 dB

   Output . . . . . 50 Ω

3. On the spectrum analyzer, press **PRESET, CAL, REALIGN LO &IF**. Wait for the adjustments to finish.
4. Set the controls as follows:

   Center frequency . . . . . 50 MHz

   Span . . . . . 0 Hz

   Log dB/division . . . . . 1 dB

   Resolution BW . . . . . 1 kHz

   Video BW . . . . . 1 Hz

5. Set the Agilent 355C to 0 dB attenuation.
6. On the spectrum analyzer, press **MKR**.
7. Adjust the Agilent 355C to place the signal 2 or 3 dB (two to three divisions) below the spectrum analyzer reference level.

ManualsPlus.com

8. On the spectrum analyzer, press **SGL SWP**, **SGL SWP, MKR, MARKER DELTA**.
9. On the Agilent 3335A, press **AMPLITUDE**, then **INCR, ⇓**.
10. Set spectrum analyzer reference level: **AMPLITUDE, REF LVL**, 10, –**dBm**, **SGL SWP**. Wait for the sweep to finish.
11. Record the spectrum analyzer Δ MKR amplitude reading in Table 10-22 as the actual Δ MKR reading.
12. Repeat steps 9 through 11 for the remaining spectrum analyzer REF LVL settings listed in Table 10-22.

Log Gain Uncertainty (1 dB Steps)

13. On the Agilent 3335A, press **AMPLITUDE,** 10, **+dBm, AMPTD INCR**, 1, **dB**.
14. Set the spectrum analyzer controls as follows:

    Marker . . . . . normal

    Reference level . . . . . 0 dBm

    Log dB/division . . . . . .1 dB

    Trigger . . . . . Continuous
15. Adjust the Agilent 355C to place the signal 2 dB to 3 dB (two to three divisions) below the spectrum analyzer reference level.
16. On the spectrum analyzer, press **SGL SWP, SGL SWP**, **MKR, MARKER DELTA**.
17. On the Agilent 3335A, press **AMPLITUDE**, **INCR**, ⇓.
18. On the spectrum analyzer, press **AMPLITUDE,** ⇓, **SGL SWP**. Wait for the sweep to finish.
19. Record the spectrum analyzer Δ MKR amplitude reading in Table 10-23 as the actual Δ MKR reading.
20. Repeat steps 17 through 19 for the remaining spectrum analyzer REF LVL settings listed in Table 10-23.

Linear Gain Uncertainty

21. On the Agilent 3335A, press **AMPLITUDE,** 10, **+dBm, AMPTD INCR,** 10, **dB**.

ManualsPlus.com

22. Set the controls on the spectrum analyzer under test to the following:

    Marker . . . . . normal

    Reference level. . . . . 0 dBm

    Amplitude scale . . . . . linear

    Units . . . . . dBm

    Trigger . . . . . Continuous

23. Adjust the Agilent 355C to place the signal two to three divisions below the spectrum analyzer reference level. The marker should read between –2 dBm and –3 dBm.

24. On the spectrum analyzer, press **SGL SWP, SGL SWP**, **MKR, MARKER DELTA**.

25. On the Agilent 3335A, press **AMPLITUDE**.

26. On the Agilent 3335A, press **INCR,** ⇓.

27. Set the spectrum analyzer REF LVL to –10 dBm.

28. On the spectrum analyzer, press **SGL SWP**.

29. Record the spectrum analyzer Δ MKR amplitude reading in Table 10-24 as the actual Δ MKR reading.

30. Repeat steps 25 through 29 for the remaining spectrum analyzer REF LVL settings listed in Table 10-24.

Table 10-22 Log IF Gain Uncertainty (10 dB Steps)

Spectrum Analyzer REF LVL (dBm)	Agilent 3335A Amplitude (dBm)	Δ MKR Reading Actual (dB)	Measurement Uncertainty (dB)
0	+10 (Ref.)	0 (Ref.)	±0.11
–10	0		±0.11
–20	–10		±0.11
–30	–20		±0.11
–40	–30		±0.11
–50	–40		±0.11
–60	–50		±0.14
–70	–60		±0.14
–80	–70		±0.14

ManualsPlus.com

Table 10-23 Log IF Gain Uncertainty (1 dB Steps)

Spectrum Analyzer REF LVL (dBm)	Agilent 3335A Amplitude (dBm)	Δ MKR Reading Actual (dB)	Measurement Uncertainty (dB)
0	+10 (Ref.)	0 (Ref.)	±0.11
–1	+9		±0.11
–2	+8		±0.11
–3	+7		±0.11
–4	+6		±0.11
–5	+5		±0.11
–6	+4		±0.11
–7	+3		±0.11
–8	+2		±0.11
–9	+1		±0.11
–10	0		±0.11
–11	–1		±0.11
–12	–2		±0.11

Table 10-24 Linear IF Gain Uncertainty

Spectrum Analyzer REF LVL (dBm)	Agilent 3335A Amplitude (dBm)	Δ MKR Reading Actual (dB)	Measurement Uncertainty (dB)
0	+10 (Ref.)	0 (Ref.)	±0.11
–10	0		±0.11
–20	–10		±0.11
–30	–20		±0.11
–40	–30		±0.11
–50	–40		±0.11
–60	–50		±0.14
–70	–60		±0.14
–80	–70		±0.14

ManualsPlus.com

16. Scale Fidelity

Instrument Under Test

All 8560 E-Series and EC-Series

Related Specification

Log Fidelity
Linear Fidelity

Related Adjustment

IF Amplitude Adjustments
Log Amplifier Adjustments

Description

The 10 dB/div, 2 dB/div, and linear scales are tested for fidelity. The 10 dB/div scale is tested in RES BW settings of 10 Hz and 300 Hz. A signal is set to the reference level for each scale. As the signal amplitude is decreased, the displayed signal amplitude is compared to the reference level.

Incremental log fidelity is calculated from the cumulative log fidelity data. The nominal difference between the cumulative log fidelity data points selected is 12 dB for the 10 dB/div scale and 2 dB for the 2 dB/div scale. These differences ensure that the uncertainty due to the marker amplitude resolution is less than one-fourth of the specification.

The spectrum analyzer provides the 10 MHz reference to the synthesizer/level generator.

Figure 10-18 Scale Fidelity Test Setup

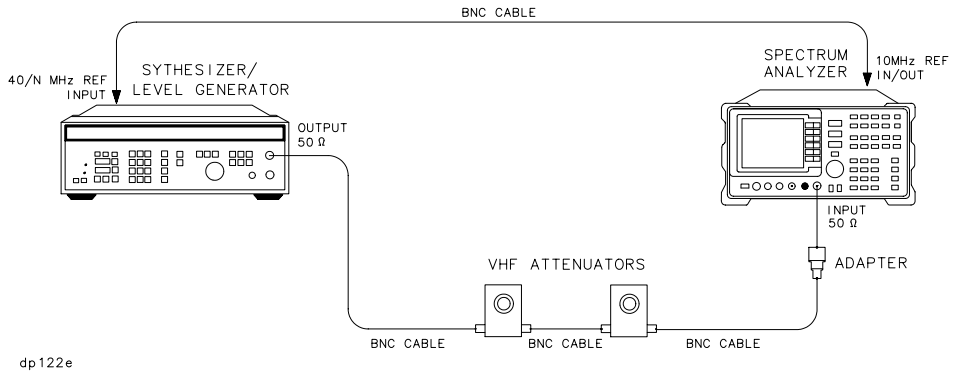

ManualsPlus.com

Equipment

Synthesizer/level generator . . . . . Agilent 3335A

1 dB VHF step attenuator . . . . . Agilent 355C

10 dB VHF step attenuator . . . . . Agilent 355D

Adapter

Type N (m) to BNC (f) 1250-1476

Type N (f) to 2.4 mm (f) . . . . . Agilent 11903B

(*for Agilent 8564E/EC and Agilent 8565E/EC*)

Cable

BNC, 122 cm (48 in.) *(4 required)* . . . . . Agilent 10503A

Procedure

1. Connect the equipment as shown in Figure 10-18. The spectrum analyzer provides the frequency reference for the Agilent 3335A.
2. Set the Agilent 3335A controls as follows:

   Frequency . . . . . 50 MHz

   Amplitude . . . . . +12 dBm

   Amplitude increment . . . . . 0.05 dB

   Output . . . . . 50 Ω

3. On the spectrum analyzer, press **PRESET**, **CAL**, **REALIGN LO & IF**. Wait for the adjustments to finish. Set the controls as follows:

   Center frequency . . . . . 50 MHz

   Span . . . . . 0 Hz

   Resolution BW . . . . . 300 Hz

   Video BW . . . . . 100 Hz

   Sweep time . . . . . 2 s

4. Set the Agilent 355C to 6 dB and Agilent 355D to 10 dB.
5. On the spectrum analyzer, press **MKR**.
6. Adjust the Agilent 355C and the Agilent 355D until the spectrum analyzer marker amplitude reads between 0 dBm and –1 dBm.

ManualsPlus.com

10 dB/Div Log Scale, RES BW ≥ 300 Hz

7. On the Agilent 3335A, press **AMPLITUDE** and use the INCR keys to adjust the amplitude until the spectrum analyzer marker reads exactly 0 dBm ±0.17 dB.
8. On the Agilent 3335A, set **AMPTD INCR** to 6 dB. Press **AMPLITUDE**.
9. On the spectrum analyzer, press **SGL SWP, MKR, MKRNOISE ON, MARKER DELTA**. Press **AMPLITUDE**, **MORE 1 OF 3, REF LVL OFFSET,** 22.8, **dB, SGL SWP**. The reference level offset effectively removes the noise marker corrections for the envelope detector, log amplifiers, and noise bandwidth correction.
10. Press **INCR** ⇓ key on the Agilent 3335A to set the amplitude to the next nominal value listed in Table 10-25.
11. On the spectrum analyzer, press **SGL SWP** and wait for the completion of a new sweep. Subtract 0.02 dB from the ΔMKR amplitude reading and record the result as the ΔMKR reading in Table 10-25, column 3.

NOTE The noise marker subtracts 22.78 dB from the 32 data point average. The reference level offset can only correct for 22.8 dB of this difference due to its 0.1 dB resolution. Subtracting 0.02 dB from the ΔMKR reading corrects for the 0.02 dB residual error.

12. Repeat steps 10 and 11 for each (nominal) Agilent 3335A amplitude setting in Table 10-25.
13. The log fidelity incremental error in the 10 dB/div scale is calculated only for readings from –12 dB to –90 dB from the reference level.
14. Calculate the incremental error for a given dB from REF LVL as follows:
    a. Set current ΔMKR equal to the ΔMKR reading for the current dB from REF LVL setting.
    b. Set previous ΔMKR equal to the ΔMKR reading for the dB from REF LVL setting listed in parenthesis in the incremental error column for the current dB from REF LVL setting.
    c. Calculate the incremental error as follows:

       Incremental error (dB/dB) = (current ΔMKR – previous ΔMKR + 12 dB) / 12

       For example, given:

       ΔMKR reading at –18 dB from REF LVL = –17.83 dB

       ΔMKR reading at –24 dB from REF LVL = –24.17 dB

ManualsPlus.com

ΔMKR reading at –30 dB from REF LVL = –30.33 dB

The incremental error for the –30 dB ΔMKR reading from the REF LVL setting (–30.33 dB) is calculated as follows:

Incremental error = (–30.33 – (–17.83) + 12) / 12
= –0.50 / 12
= –0.042 dB/dB

10 dB/Div Log Scale, RES BW ≤ 100 Hz

15. Set the spectrum analyzer controls as follows:

Trigger . . . . . Continuous

Reference level offset . . . . . .0 dB

Markers. . . . . off

Span . . . . . 100 Hz

Resolution BW . . . . . 10 Hz

Sweep time . . . . . Automatic

16. Set the Agilent 3335A controls as follows:

Amplitude . . . . . +12 dBm

Amplitude increment . . . . . 0.05 dB

17. Set the Agilent 355C to 6 dB and Agilent 355D to 10 dB.

18. On the spectrum analyzer, press **PEAK SEARCH**.

19. Adjust the Agilent 355C and the Agilent 355D until the spectrum analyzer marker amplitude reads between 0 dBm and –1 dBm.

20. On the Agilent 3335A, press **AMPLITUDE** and use the **INCR** keys to adjust the amplitude until the spectrum analyzer marker reads exactly 0 dBm ±0.17 dB.

21. On the Agilent 3335A, set **AMPTD INCR** to 6 dB. Press **AMPLITUDE**.

22. On the spectrum analyzer, press **SGL SWP**, **PEAK SEARCH**, **MARKER DELTA**.

23. Press **INCR** ⇓ key on the Agilent 3335A to set the amplitude to the next nominal value listed in Table 10-26.

NOTE Set **AMPTD INCR** to 4 dB before setting the Agilent 3335A amplitude to the last two power levels.

ManualsPlus.com

24. If the dB from REF LVL (nominal) is ≥ –80 dB (–40 dB, for example), press **SGL SWP** and wait until a new sweep is completed. Press **PEAK SEARCH** and record the ΔMKR amplitude reading in Table 10-26, column 3.

25. If the dB from REF LVL (nominal) is < –80 dB (–84 dB, for example), press **TRIG**, **CONT, BW**, **VID AVG ON**, **1**, **0**, **HZ**, and wait for `VAVG 10` to be displayed above the graticule. Press **SGL SWP** and wait until a new sweep is completed. Press **PEAK SEARCH** and record the ΔMKR amplitude reading in Table 10-26, column 3.

26. Repeat steps 23, 24, and 25 for each (nominal) Agilent 3335A amplitude setting in Table 10-26.

27. Calculate the incremental error for a given dB from REF LVL as follows:

    a. Set current ΔMKR equal to the ΔMKR reading for the current dB from REF LVL setting.

    b. Set previous ΔMKR equal to the ΔMKR reading for the dB from REF LVL setting listed in parenthesis in the incremental error column for the current dB from REF LVL setting.

    c. Calculate the incremental error as follows:

    Incremental error (dB/dB) = (current ΔMKR – previous ΔMKR + 12 dB) / 6

    For example, given:

    ΔMKR reading at –18 dB from REF LVL = –17.83 dB

    ΔMKR reading at –24 dB from REF LVL = –24.17 dB

    ΔMKR reading at –30 dB from REF LVL = –30.33 dB

    The incremental error for the –30 dB from REF LVL setting is calculated as follows:

    Incremental error = (–30.33 – (–17.83) + 12) / 6
    = –0.50 / 6
    = –0.083 dB/2 dB

2 dB/Div Log Scale

28. Set the spectrum analyzer controls as follows:

    Trigger . . . . . Continuous

    Markers . . . . . .off

    Log dB/division . . . . . 2 dB

ManualsPlus.com

Span . . . . . 0 Hz

Resolution BW . . . . . 1 kHz

Video BW . . . . . 300 Hz

Sweep time . . . . . 1 s

Video average . . . . . off

29. Set the Agilent 3335A controls as follows:

Amplitude . . . . . +12 dBm

Amplitude increment . . . . . 0.01 dB

30. Set the Agilent 355C and Agilent 355D to 0 dB.

31. On the spectrum analyzer, press **MKR**.

32. Adjust the Agilent 355C and the Agilent 355D until the spectrum analyzer marker amplitude reads between 0 dBm and –1 dBm.

33. On the Agilent 3335A, press **AMPLITUDE** and use the **INCR** keys to adjust the amplitude until the spectrum analyzer marker reads exactly 0 dBm ±0.02 dB.

34. On the Agilent 3335A, set **AMPTD INCR** to 2 dB. Press **AMPLITUDE**.

35. On the spectrum analyzer, press **SGL SWP, MKR, MARKER DELTA**.

36. Press **INCR** ⇓ key on the Agilent 3335A to set the amplitude to the next nominal value listed in Table 10-27.

37. On the spectrum analyzer, press **SGL SWP** and wait for the completion of a new sweep. Record the ΔMKR amplitude reading in Table 10-27, column 3.

38. Repeat steps 36 and 37 for each (nominal) Agilent 3335A amplitude setting in Table 10-27.

39. From each ΔMKR reading in Table 10-27, subtract the previous ΔMKR reading. Add 2 dB to this number. Divide this result by 2 dB and record the result as the incremental error in Table 10-27.

    Incremental error = (current ΔMKR – previous ΔMKR + 2) / 2

ManualsPlus.com

Linear Scale

40. Set the spectrum analyzer controls as follows:

    Trigger . . . . . Continuous

    Amplitude scale . . . . . linear

    Amplitude units. . . . . dBm

41. Set the Agilent 3335A controls as follows:

    Amplitude . . . . . +12 dBm

    Amplitude increment . . . . . .0.01 dB

42. Set the Agilent 355C and Agilent 355D to 0 dB.

43. On the spectrum analyzer, press **MKR, MARKER NORMAL**.

44. Adjust the Agilent 355C and the Agilent 355D until the spectrum analyzer marker amplitude reads between 0 dBm and –1 dBm.

45. On the Agilent 3335A, press **AMPLITUDE** and use the INCR keys to adjust the amplitude until the spectrum analyzer marker reads exactly 0 dBm ± 0.02 dB.

46. On the Agilent 3335A, set **AMPTD INCR** to 2 dB. Press **AMPLITUDE**.

47. On the spectrum analyzer, press **SGL SWP**, **MKR, MARKER DELTA**.

48. Press **INCR** ⇓ key on the Agilent 3335A to set the amplitude to the next nominal value listed in Table 10-28.

49. On the spectrum analyzer, press **SGL SWP** and wait for the completion of a new sweep. Record the ΔMKR amplitude reading in Table 10-28, column 3.

50. Repeat steps 48 and 49 for each (nominal) Agilent 3335A amplitude setting in Table 10-28.

ManualsPlus.com

Table 10-25 10 dB/Div Log Scale Fidelity (RES BW ≥300 Hz)

Agilent 3335A Amplitude* (dBm, nominal)	dB from REF LVL (nominal)	Δ MKR Reading (dB)	Incremental Error (dB)	Measurement Uncertainty (dB)
+12	0	0 (Ref)	0 (Ref)	0
+6	–6		N/A	±0.24
+0	–12		(0)	±0.24
–6	–18		(–6)	±0.24
–12	–24		(–12)	±0.24
–18	–30		(–18)	±0.24
–24	–36		(–24)	±0.24
–30	–42		(–30)	±0.24
–36	–48		(–36)	±0.24
–42	–54		(–42)	±0.24
–48	–60		(–48)	+0.25/–0.26
–54	–66		(–54)	+0.25/–0.26
–60	–72		(–60)	+0.25/–0.26
–66	–78		(–66)	+0.25/–0.26
–72	–84		(–72)	+0.25/–0.26
–78	–90		(–78)	+0.25/–0.26

*These are nominal amplitude values only, assuming the signal is at the reference level with the Agilent 3335A set to +12 dBm. Use the in INCR keys to step the amplitude precise 6 dB (or 4 dB) steps.

ManualsPlus.com

Table 10-26 10 dB/Div Log Scale Fidelity (RES BW ≤100 Hz)

Agilent 3335A Amplitude* (dBm, nominal)	dB from REF LVL (nominal)	Δ MKR Reading (dB)	Incremental Error (dB)	Measurement Uncertainty (dB)
+12	0	0 (Ref)	0 (Ref)	0
+6	–6		N/A	±0.24
+0	–12		(0)	±0.24
–6	–18		(–6)	±0.24
–12	–24		(–12)	±0.24
–18	–30		(–18)	±0.24
–24	–36		(–24)	±0.24
–30	–42		(–30)	±0.24
–36	–48		(–36)	±0.24
–42	–54		(–42)	±0.24
–48	–60		(–48)	±0.24
–54	–66		(–54)	±0.24
–60	–72		(–60)	+0.25/–0.26
–66	–78		(–66)	+0.25/–0.26
–72	–84		(–72)	+0.25/–0.26
–78	–90		(–78)	+0.25/–0.26
–82†	–94		N/A	+0.25/–0.26
–86†	–98		N/A	+0.25/–0.26

* These are nominal amplitude values only, assuming the signal is at the reference level with the Agilent 3335A set to +12 dBm. Use the INCR keys to step the amplitude in precise 6 dB (or 4 dB) steps.

† INCR keys cannot be used to set this step; key in the amplitude from the previous step (that is, –78 dBm, nominal, –4 dB).

ManualsPlus.com

Table 10-27 2 dB/Div Log Scale Fidelity

Agilent 3335A Amplitude* (dBm, nominal)	dB from REF LVL (nominal)	Δ MKR Reading (dB)	Incremental Error (dB)	Measurement Uncertainty (dB)
+12	0	0 (Ref)	0 (Ref)	0
+10	–2			±0.053
+8	–4			±0.053
+6	–6			±0.053
+4	–8			±0.053
+2	–10			±0.053
+0	–12			±0.053
–2	–14			±0.053
–4	–16			±0.053
–6	–18			±0.053
* These are nominal amplitude values only, assuming the signal is at the reference level with the Agilent 3335A set to +12 dBm. Use the INCR keys to step the amplitude in precise 2 dB steps.				

Table 10-28 Linear Scale Fidelity

Agilent 3335A Amplitude* (dBm, nominal)	dB from REF LVL (nominal)	Δ MKR Reading (dB)	Measurement Uncertainty (dB)
+12	0	0 (Ref)	0
+10	–2		±0.03
+8	–4		±0.03
+6	–6		±0.03
+4	–8		±0.03
+2	–10		±0.03
+0	–12		±0.03
–2	–14		±0.03
–4	–16		±0.03
–6	–18		±0.03
* These are nominal amplitude values only, assuming the signal is at the reference level with the Agilent 3335A set to +12 dBm. Use the INCR keys to step the amplitude in precise 2 dB steps.			

ManualsPlus.com

17. Residual FM

Instrument Under Test

All 8560 E-Series and EC-Series

Related Specification

Residual FM

Related Adjustment

There is no related adjustment for this performance test.

Description

This test measures the inherent short-term instability of the spectrum analyzer. A stable signal is applied to the spectrum analyzer input. The analyzer is set to zero span and the signal is slope-detected on the skirt of the 10 Hz RES BW. Any instability in the spectrum analyzer LO system is transferred to the IF in the mixing process. The markers are used to locate a 20 ms portion of the trace with the greatest amplitude deviation. This amplitude deviation is converted to a frequency deviation, the residual FM, by multiplying the deviation by the slope of the 10 Hz filter.

Figure 10-19 Residual FM Test Setup

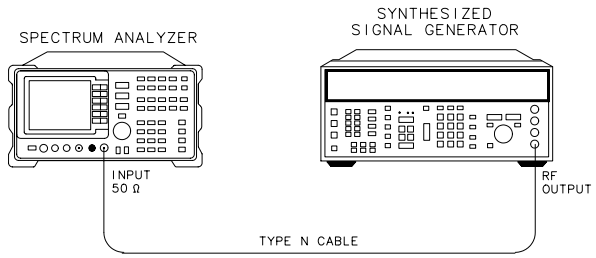

Equipment

Synthesized signal generator . . . . . Agilent 8663A

Adapter

Type N (f) to APC 3.5 (f) (Option 026 only). 1250-1745

ManualsPlus.com

Type N (f) to 2.4 mm (f). . . . . Agilent 11903B

(*for Agilent 8564E/EC and Agilent 8565E/EC*)

Cable

Type N, 183 cm (79 inches). . . . . Agilent 11500A

Procedure

1. Connect the equipment as shown in Figure 10-19.
2. Set the Agilent 8663A controls as follows:

   Frequency . . . . . 2500 MHz

   Amplitude . . . . . 0 dBm

3. Press **PRESET** on the spectrum analyzer. Set the spectrum analyzer controls as follows:

   Center frequency . . . . . 2.5 GHz

   Span . . . . . 1 MHz

4. On the spectrum analyzer, press **PEAK SEARCH**, **MKR**, **SIG TRK ON**, **SPAN,** 5, **kHz**. Wait for the signal to be centered in a 5 kHz span.
5. On the spectrum analyzer, press **BW**, 10, **Hz**, **SPAN,** 100, **Hz**. Wait for the signal to be centered in a 100 Hz span.
6. On the spectrum analyzer, press **MKR**, **SIG TRK OFF, AMPLITUDE, LOG dB/DIV,** 2, **dB**.
7. Press **PEAK SEARCH, MKR** →, **MARKER** → **REF LVL, PEAK SEARCH, MARKER DELTA**.
8. On the spectrum analyzer, rotate the knob counterclockwise until the ΔMKR amplitude is –10 dB ±0.5 dB.
9. On the spectrum analyzer, press **MARKER NORMAL, MARKER** → **CF**, **SPAN**, **ZERO SPAN**, **SWEEP,** 200, **ms**.
10. If the displayed trace is not about 5 divisions below the reference level, press **FREQUENCY** and use the knob to adjust the center frequency until the trace is approximately 5 divisions below the reference level.
11. Press **SGL SWP, MKR**.

ManualsPlus.com

12. Locate the horizontal division with the greatest amplitude deviation. Rotate the knob to place the marker at the highest point in the horizontal division with the greatest amplitude division. Press **MARKER DELTA**. Rotate the knob to place the marker at the lowest point within the same division. Record the absolute value of the ΔMKR amplitude below as the amplitude deviation.

Amplitude deviation _____ dB

13. Multiply the amplitude deviation above by 0.457 Hz/dB. This is the slope of the 10 Hz RES BW filter at 10 dB below the peak of the filter. Record the result below as the residual FM.

Residual FM_____ Hz

ManualsPlus.com

18. Noise Sidebands: 8560E, Agilent 8561E, Agilent 8563E

Instrument Under Test

8560E/, serial number prefix <3424A
Agilent 8561E, serial number prefix <3424A
Agilent 8563E, serial number prefix <3436A

Related Specification

Noise Sidebands

Related Adjustment

There is no related adjustment procedure for this performance test.

Description

The noise sidebands of a 1.0 GHz, –10 dBm signal are measured at offsets of 100 Hz, 1 kHz, 10 kHz, 30 kHz, and 100 kHz from the carrier. The noise marker and video averaging functions are used to average the noise sidebands at each offset.

NOTE Do not use this test for 8560E/EC, Agilent 8561E/EC, or Agilent 8563E/EC spectrum analyzers with serial number prefixes greater than or equal to those listed above. For these newer analyzers, use test 19 instead.

Figure 10-20 Noise Sidebands Test Setup

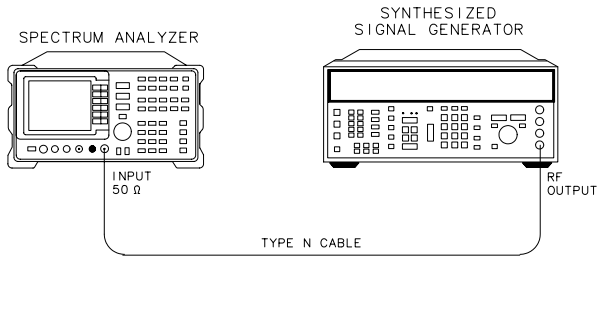

Equipment

Synthesized signal generator . . . . . Agilent 8663A

ManualsPlus.com

Cable

Type N, 183 cm (72 in.) . . . . . Agilent 11500A

Procedure

1. Connect the equipment as shown in Figure 10-20.
2. Set the Agilent 8663A controls as follows:

   CW frequency . . . . . 1.0 GHz

   Power level . . . . . –15 dBm

3. On the spectrum analyzer, press **PRESET**. Set the controls as follows:

   Center frequency . . . . . 1.0 GHz

   Center frequency step . . . . . 100 Hz

   Span . . . . . 10 kHz

   Reference level. . . . . –10 dBm

   Attenuation . . . . . 0 dB

4. Press **PEAK SEARCH, MKR, SIG TRK ON, SPAN,** 100, **Hz**. Wait for the completion of two sweeps in a 100 Hz span, then press **MKR, SIG TRK OFF, BW,** 10, **Hz**, **VIDEO BW,** 1, **Hz**.
5. Adjust the signal generator amplitude as necessary to place the peak of the signal at the spectrum analyzer reference level.
6. On the spectrum analyzer, press **SGL SWP**. Wait for the sweep to complete, then press **PEAK SEARCH, MKR**, **MKR NOISE ON, MARKER DELTA, AMPLITUDE,** 50, –**dBm, BW, VID AVG ON,** 5, **Hz**.
7. On the spectrum analyzer, press **FREQUENCY,** ⇑ **TRIG, SWEEP CONT, TRACE, CLEAR WRITE A**.
8. Wait until VAVG 5 is displayed above the graticule. Press **SGL SWP** and wait for the sweep to complete.
9. Record the Δ MKR amplitude in Table 10-29, column 2, as single sideband noise for +100 Hz offset.
10. On the spectrum analyzer, press **FREQUENCY**, ⇓, ⇓, **TRIG**, **SWEEP CONT, TRACE, CLEAR WRITE A**.
11. Wait until VAVG 5 is displayed above the graticule. Press **SGL SWP** and wait for the sweep to complete.
12. Record the Δ MKR amplitude in Table 10-29, column 2, as the single sideband noise for –100 Hz offset.
13. On the spectrum analyzer, press **FREQUENCY**, ⇑, **CF STEP**, 1, **kHz**.

ManualsPlus.com

14. Repeat steps 7 through 12 for a center frequency step of 1 kHz. Record the Δ MKR amplitudes in Table 10-29, column 2, as single sideband noise for +1 kHz and –1 kHz offsets.

15. On the spectrum analyzer, press **FREQUENCY,** ⇑, **CF STEP,** 10, **kHz**.

16. Repeat steps 7 through 12 for a center frequency step of 10 kHz. Record the Δ MKR amplitudes in Table 10-29, column 2, as single sideband noise for +10 kHz and –10 kHz offsets.

17. On the spectrum analyzer, press **FREQUENCY**, ⇑, **CF STEP,** 30, **kHz**.

18. Repeat steps 7 through 12 for a center frequency step of 30 kHz. Record the Δ MKR amplitudes in Table 10-29, column 2, as single sideband noise for +30 kHz and –30 kHz offsets.

19. On the spectrum analyzer, press **FREQUENCY**, ⇑, **CF STEP**, 100, **kHz**.

20. Repeat steps 7 through 12 for a center frequency step of 100 kHz. Record the Δ MKR amplitudes in Table 10-29, column 2, as single sideband noise for +100 kHz and –100 kHz offsets.

Table 10-29 Noise Sidebands

Offset (kHz)	Single Sideband Noise (dBc/Hz)	Measurement Uncertainty (dB)
+0.1		+1.22/–1.34
–0.1		+1.22/–1.34
+1		+1.22/–1.34
–1		+1.22/–1.34
+10		+1.22/–1.34
–10		+1.22/–1.34
+30		+1.22/–1.34
–30		+1.22/–1.34
+100		+1.22/–1.34
–100		+1.22/–1.34

ManualsPlus.com

19. Noise Sidebands

Instrument Under Test

8560E/EC, serial number prefix ≥3424A
Agilent 8561E/EC, serial number prefix ≥3424A
Agilent 8562E/EC
Agilent 8563E/EC, serial number prefix ≥3436A
Agilent 8564E/EC
Agilent 8565E/EC

Related Specification

Noise Sidebands

Related Adjustment

There is no related adjustment procedure for this performance test.

Description

The noise sidebands of a 1.0 GHz, –10 dBm signal are measured at offsets of 100 Hz, 1 kHz, 10 kHz, 30 kHz, and 100 kHz from the carrier. The noise marker and video averaging functions are used to average the noise sidebands at each offset.

Figure 10-21 Noise Sidebands Test Setup

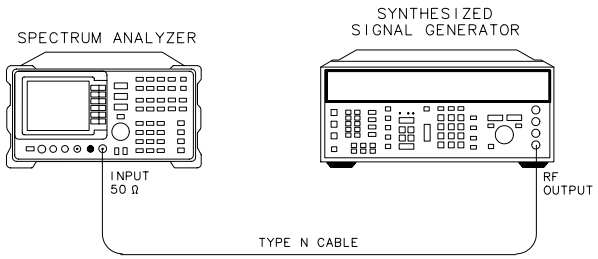

Equipment

Synthesized signal generator . . . . . Agilent 8663A

Adapter

Type N (f) to 2.4 mm (f) . . . . . Agilent 11903B

ManualsPlus.com

Cable

Type N, 183 cm (72 in.) . . . . . Agilent 11500A

Procedure

1. Connect the equipment as shown in Figure 10-21.
2. Set the Agilent 8663A controls as follows:

   CW frequency . . . . . .1.0 GHz

   Power level . . . . . .–15 dBm

3. On the spectrum analyzer, press **PRESET**. Set the controls as follows:

   Center frequency . . . . . .1.0 GHz

   Center frequency step . . . . . 100 Hz

   Span . . . . . 10 kHz

   Reference level . . . . . .–10 dBm

   Attenuation. . . . . .0 dB

4. Press **PEAK SEARCH, MKR**, **SIG TRK ON, SPAN,** 100, **Hz**. Wait for the completion of two sweeps in a 100 Hz span, then press **MKR**, **SIG TRK OFF, BW**, 10, **Hz**, **VIDEO BW**, 1, **Hz**.
5. Adjust the signal generator amplitude as necessary to place the peak of the signal at the spectrum analyzer reference level.
6. On the spectrum analyzer, press **SGL SWP**. Wait for the sweep to complete, then press **PEAK SEARCH**, **MKR, MKR NOISE ON, MARKER DELTA**, **AMPLITUDE,** 50, –**dBm**, **BW**, **VID AVG ON**, 5, **Hz**.
7. On the spectrum analyzer, press **FREQUENCY,** ⇑, **TRIG, SWEEP CONT, TRACE**, **CLEAR WRITE A**.
8. Wait until VAVG 5 is displayed above the graticule. Press **SGL SWP** and wait for the sweep to complete.
9. Record the Δ MKR amplitude in Table 10-30, column 2, as single sideband noise for +100 Hz offset.
10. On the spectrum analyzer, press **FREQUENCY,** ⇓, ⇓, **TRIG**, **SWEEP CONT, TRACE, CLEAR WRITE A**.
11. Wait until VAVG 5 is displayed above the graticule. Press **SGL SWP** and wait for the sweep to complete.
12. Record the Δ MKR amplitude in Table 10-30, column 2, as the single sideband noise for –100 Hz offset.
13. On the spectrum analyzer, press **FREQUENCY**, ⇑, **CF STEP,** 1, **kHz**.

ManualsPlus.com

14. Repeat steps 7 through 12 for a center frequency step of 1 kHz. Record the Δ MKR amplitudes in Table 10-30, column 2, as single sideband noise for +1 kHz and –1 kHz offsets.

15. On the spectrum analyzer, press **FREQUENCY,** ⇑, **CF STEP**, 10, **kHz**.

16. Repeat steps 7 through 12 for a center frequency step of 10 kHz. Record the Δ MKR amplitudes in Table 10-30, column 2, as single sideband noise for +10 kHz and –10 kHz offsets.

17. On the spectrum analyzer, press **FREQUENCY**, ⇑, **CF STEP**, 30, **kHz**.

18. Repeat steps 7 through 12 for a center frequency step of 30 kHz. Record the Δ MKR amplitudes in Table 10-30, column 2, as single sideband noise for +30 kHz and –30 kHz offsets.

19. On the spectrum analyzer, press **FREQUENCY,** ⇑, **CF STEP,** 97, **kHz**.

20. Set the spectrum analyzer controls as follows:

Span	10 kHz
Reference level	–10 dBm
Markers	off
Video average	off
Resolution bandwidth	3 kHz
Video bandwidth	100 Hz
Trigger	Continuous

21. Press **PEAK SEARCH**.

22. Adjust the signal generator amplitude as necessary to place the peak of the signal at the spectrum analyzer reference level.

23. On the spectrum analyzer, press **SGL SWP**. Wait for the sweep to complete, then press **PEAK SEARCH, MKR, MKR NOISE ON, MARKER DELTA**, **AMPLITUDE,** 50, –**dBm, BW, VID AVG ON,** 5, **Hz**.

24. Repeat steps 7 through 12 for a center frequency step of 100 kHz. Record the Δ MKR amplitudes in Table 10-30, column 2, as single sideband noise for +100 kHz and –100 kHz offsets.

ManualsPlus.com

Table 10-30 Noise Sidebands

Offset (kHz)	Single Sideband Noise (dBc/Hz)	Measurement Uncertainty (dB)
+0.1		+1.22/–1.34
–0.1		+1.22/–1.34
+1		+1.22/–1.34
–1		+1.22/–1.34
+10		+1.22/–1.34
–10		+1.22/–1.34
+30		+1.22/–1.34
–30		+1.22/–1.34
+100		+1.22/–1.34
–100		+1.22/–1.34

ManualsPlus.com

20. Image, Multiple, and Out-of-Range Responses: 8560E/EC

Instrument Under Test

8560E/EC

Related Specification

Image and Multiple Responses
Out-of-Range Responses

Related Adjustment

There is no related adjustment procedure for this performance test.

Description

Image, multiple, and out-of-range responses are tested by first applying a signal to the analyzer that is at the tuned frequency, and making a reference amplitude measurement. The source is then tuned to a frequency which causes either an image, multiple, or out-of-range response. The amplitude displayed on the spectrum analyzer is measured and recorded.

Figure 10-22 Image, Multiple, and Out-of-Range Responses Test Setup

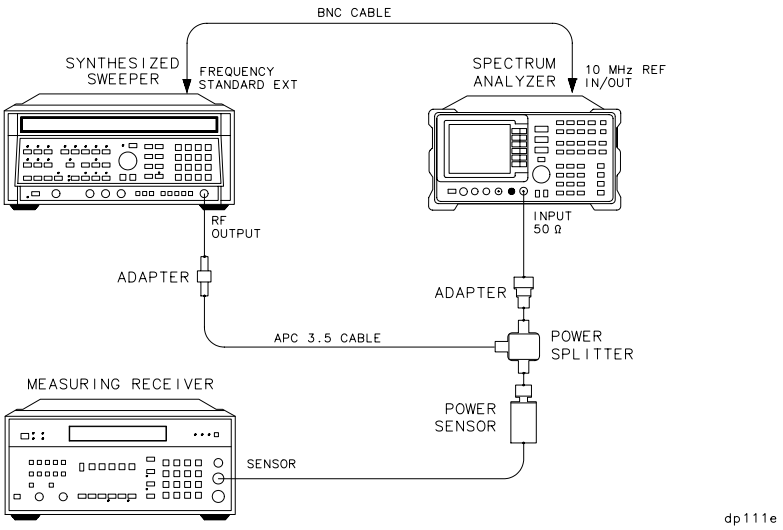

ManualsPlus.com

Equipment

Synthesized sweeper . . . . . Agilent 8340A/B

Measuring receiver . . . . . Agilent 8902A

Power sensor . . . . . Agilent 8485A

Power splitter . . . . . Agilent 11667B

Adapters

Type N (m) to APC 3.5 (m) 1250-1743

Cables

BNC, 122 cm (48 in) . . . . . Agilent 10503A

APC 3.5, 91 cm (36 in). 8120-4921

Procedure

1. Connect the equipment as shown in Figure 10-22, but do not connect the power sensor to the power splitter.
2. On the Agilent 8340A/B, press **INSTR PRESET**. Set the controls as follows:

   CW frequency . . . . . 2 GHz

   Power level . . . . . .–10 dBm

   Frequency standard switch (rear panel). . . . . .EXT
3. On the spectrum analyzer, press **PRESET**. Set the controls as follows:

   Center frequency . . . . . 2 GHz

   Span . . . . . 10 kHz

   Reference level . . . . . .–10 dBm

   Attenuation. . . . . .0 dB

   Resolution BW . . . . . 1 kHz
4. Zero and calibrate the Agilent 8902A and the Agilent 8485A. Enter the power sensor 2 GHz calibration factor into the Agilent 8902A. Connect the Agilent 8485A to the Agilent 11667B power splitter.
5. Adjust the Agilent 8340A/B power level to place the signal peak at the reference level.
6. Press **RATIO** on the Agilent 8902A.
7. On the spectrum analyzer, press **PEAK SEARCH**, **MKR→**,

ManualsPlus.com

MARKER→ REF LVL, SGL SWP, PEAK SEARCH, MARKER DELTA.

8. For each of the frequencies listed in Table 10-31, do the following:

   a. Set the Agilent 8340A/B to the listed CW key frequency.

   b. Enter the appropriate power sensor calibration factor into the Agilent 8902A.

   c. Set the Agilent 8340A/B power level for a 0 dB reading on the Agilent 8902A.

   d. On the spectrum analyzer, press **SGL SWP**. Wait for completion of the sweep before continuing.

   e. On the spectrum analyzer, press **PEAK SEARCH**, and record the Δ MKR amplitude in Table 10-31 as the response amplitude.

Table 10-31 Image, Multiple, and Out-of-Range Responses

8560E/EC Center Freq (GHz)	Agilent 8340A/B CW (MHz)	Response Amplitude (dBc)	Measurement Uncertainty (dB)
2.0	2021.4*		+0.82/–0.87
2.0	2621.4*		+0.82/–0.87
2.0	2321.4†		+0.82/–0.87
2.0	2600.0†		+0.82/–0.87
2.0	7910.7‡		+0.82/–0.87
2.0	9821.4‡		+0.82/–0.87

* Image response
‡ Out-of-range response
† Multiple response

ManualsPlus.com

21. Image, Multiple, Out-of-Band, and Out-of-Range Responses: Agilent 8561E/EC

Instrument Under Test

Agilent 8561E/EC

Related Specification

Image, Multiple, and Out-of-Band Responses
Out-of-Range Responses

Related Adjustment

SYTF Adjustment

Description

Image, multiple, out-of-band, and out-of-range responses are tested by first applying a signal to the analyzer that is at the tuned frequency, and making a reference amplitude measurement. The source is then tuned to a frequency which causes either an image, multiple, out-of-band, or out-of-range response. The amplitude displayed on the spectrum analyzer is measured and recorded.

Figure 10-23 Image, Multiple, Out-of-Band, and Out-of-Range Responses Test Setup

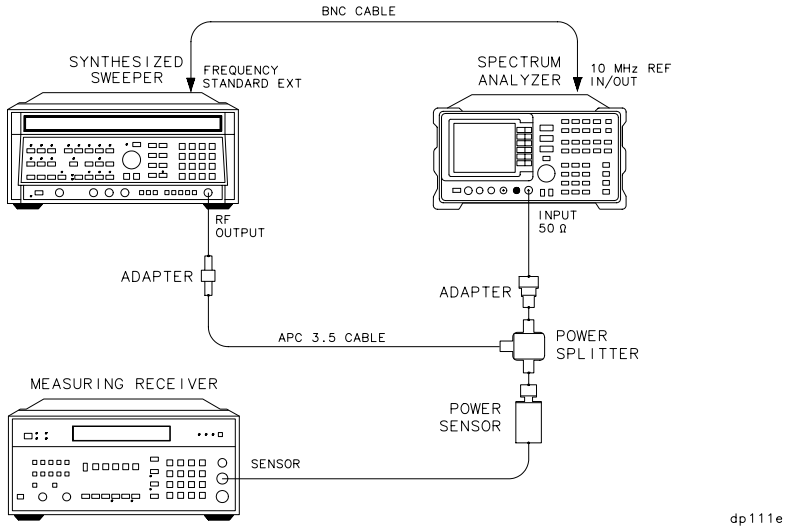

ManualsPlus.com

Equipment

Synthesized sweeper . . . . . .Agilent 8340A/B

Measuring receiver . . . . . Agilent 8902A

Power sensor. . . . . Agilent 8485A

Power splitter . . . . . Agilent 11667B

Adapter

Type N (m) to APC 3.5 (m). 1250-1743

Cables

BNC, 122 cm (48 in.) . . . . . Agilent 10503A

APC 3.5, 91 cm (36 in.). 8120-4921

Procedure

1. Connect the equipment as shown in Figure 10-23, but do not connect the power sensor to the power splitter.
2. On the Agilent 8340A/B, press **INSTR PRESET**. Set the controls as follows:

   CW frequency . . . . . .2 GHz

   Power level . . . . . –10 dBm

   Frequency standard switch (rear panel) . . . . . EXT
3. On the spectrum analyzer, press **PRESET**. Set the controls as follows:

   Center frequency . . . . . .2 GHz

   Span . . . . . 10 kHz

   Reference level. . . . . –10 dBm

   Attenuation . . . . . 0 dB

   Resolution BW. . . . . 1 kHz
4. Zero and calibrate the Agilent 8902A and the Agilent 8485A. Enter the power sensor 2 GHz calibration factor into the Agilent 8902A. Connect the Agilent 8485A to the Agilent 11667B power splitter.
5. Adjust the Agilent 8340A/B power level to place the signal peak at the reference level.
6. Press **RATIO** on the Agilent 8902A.
7. On the spectrum analyzer, press **PEAK SEARCH, MKR→**,

ManualsPlus.com

MARKER→ REF LVL, SGL SWP, PEAK SEARCH, MARKER DELTA.

8. For each of the frequencies listed in Table 10-32, do the following:
   a. Set the Agilent 8340A/B to the listed CW key frequency.
   b. Enter the appropriate power sensor calibration factor into the Agilent 8902A.
   c. Set the Agilent 8340A/B power level for a 0 dB reading on the Agilent 8902A.
   d. On the spectrum analyzer, press **SGL SWP**. Wait for completion of the sweep before continuing.
   e. On the spectrum analyzer, press **PEAK SEARCH**, and record the Δ MKR amplitude in Table 10-32 as the response amplitude.
9. On the spectrum analyzer, press **MARKER**, **MARKERS OFF, TRIG**, **SWEEP CONT**.
10. Press **RATIO** on the Agilent 8902A.

Band 1 Responses

11. On the spectrum analyzer, press **FREQUENCY, CENTER FREQUENCY,** 4, **GHz**.
12. On the Agilent 8340A/B, set CW to 4 GHz and POWER LEVEL to –10 dBm.
13. Enter the power sensor 4 GHz calibration factor into the Agilent 8902A.
14. On the spectrum analyzer, press **AUX CTRL, INTERNAL MIXER**, **PRESEL AUTO PK**. Wait for the peaking message to disappear, then press **MARKER, MARKERS OFF**.
15. Repeat steps 5 through 9 for the Agilent 8340A/B frequencies listed in Table 10-32 for Band 1.

ManualsPlus.com

Table 10-32 Image, Multiple, and Out-of-Range Responses

Band	Agilent 8561E/EC Center Freq (GHz)	Agilent 8340A/B CW (MHz)	Response Amplitude (dBc)	Measurement Uncertainty (dB)
0	2.0	2021.4*		+0.82/–1.01
	2.0	2621.4*		+0.82/–1.01
	2.0	2321.4†		+0.82/–1.01
	2.0	2600.0†		+0.82/–1.01
	2.0	5600.0‡		+0.82/–1.01
	2.0	6221.4‡		+0.82/–1.01
	2.0	7910.7§		+0.82/–1.01
	2.0	9821.4§		+0.82/–1.01
1	4.0	4021.4*		+0.82/–1.01
	4.0	4621.4*		+0.82/–1.01
	4.0	4321.4†		+0.82/–1.01
	4.0	4600.0†		+0.82/–1.01
	4.0	289.3‡		+0.82/–1.01
	4.0	8310.7§		+0.82/–1.01
	4.0	8932.1§		+0.82/–1.01

* Image response
† Multiple response
‡ Out-of-band response
§ Out-of-range response

ManualsPlus.com

22. Image, Multiple, and Out-of-Band Responses: Agilent 8562E/EC

Instrument Under Test

Agilent 8562E/EC

Related Specification

Image, Multiple, and Out-of-Band Responses

Related Adjustment

RYTHM Adjustment

Description

Image, multiple, and out-of-band responses are tested in all frequency bands. A signal is applied to the signal analyzer INPUT 50 Ω, then a reference amplitude measurement is made. The signal source is then tuned to a frequency which causes either an image, multiple, or out-of-band response. The amplitude displayed on the spectrum analyzer is measured and recorded.

Figure 10-24 Image, Multiple, and Out-of-Band Responses Test Setup

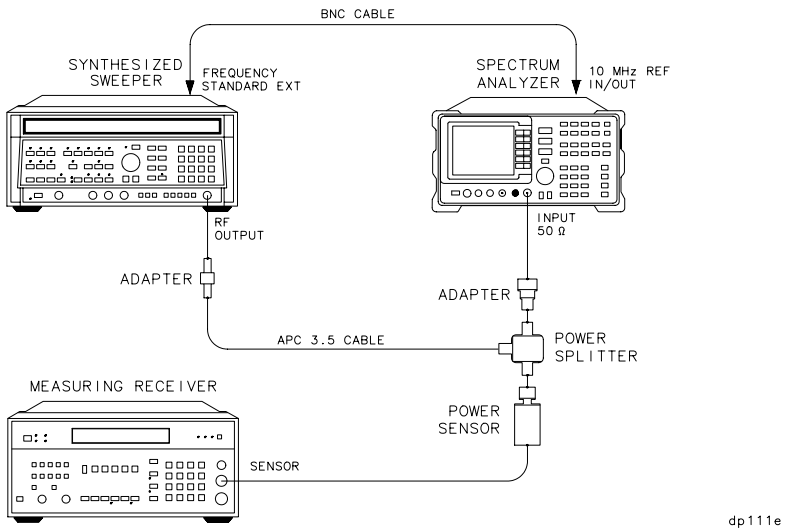

Equipment

Synthesized sweeper . . . . . Agilent 8340A/B

ManualsPlus.com

Measuring receiver . . . . . Agilent 8902A

Power sensor. . . . . Agilent 8485A

Power splitter . . . . . .Agilent 11667A/B

Adapter

Type N (m) to APC 3.5 (m). 1250-1743

Cables

BNC, 122 cm (48 in.) . . . . . Agilent 10503A

APC 3.5, 91 cm (36 in.). 8120-4921

Procedure

Band 0

1. Connect the equipment as shown in Figure 10-24, but do not connect the power sensor to the power splitter.
2. On the Agilent 8340A/B, press **INSTR PRESET**. Set the controls as follows:

   CW frequency . . . . . .2 GHz

   Power level . . . . . –10 dBm

   Frequency standard switch (rear panel) . . . . . EXT
3. On the spectrum analyzer, press **PRESET, RECALL, MORE 1 OF 2**, **FACTORY PRSEL PK**. Set the controls as follows:

   Center frequency . . . . . .2 GHz

   Span . . . . . 10 kHz

   Reference level. . . . . –10 dBm

   Attenuation . . . . . 0 dB

   Resolution BW. . . . . 1 kHz
4. Zero and calibrate the Agilent 8902A and the Agilent 8485A. Enter the power sensor 2 GHz calibration factor into the Agilent 8902A. Connect the Agilent 8485A to the Agilent 11667A/B power splitter.
5. Adjust the Agilent 8340A/B power level to place the signal peak at the reference level.
6. Press **RATIO** on the Agilent 8902A.

ManualsPlus.com

7. On the spectrum analyzer, press **PEAK SEARCH, MKR →, MKR → REF LVL, SGL SWP, PEAK SEARCH, MARKER DELTA**.
8. For each of the frequencies listed in Table 10-33 for Band 0, do the following:
   a. Set the Agilent 8340A/B to the listed CW frequency.
   b. Enter the appropriate power sensor calibration factor into the Agilent 8902A.
   c. Set the Agilent 8340A/B power level for a 0 dB reading on the Agilent 8902A.
   d. On the spectrum analyzer, press **SGL SWP**. Wait for completion of the sweep before continuing. Press **PEAK SEARCH**, and record the Δ MKR amplitude in Table 10-33 as the response amplitude.
9. On the spectrum analyzer, press **MKR**, **MARKERS OFF**, **TRIG, SWEEP CONT**.
10. Press **RATIO** on the Agilent 8902A.

Band 1

11. On the spectrum analyzer, press **FREQUENCY**, **CENTER FREQ,** 4, **GHz**.
12. On the Agilent 8340A/B, set the CW to 4 GHz and POWER LEVEL to –10 dBm.
13. Enter the power sensor 4 GHz calibration factor into the Agilent 8902A.
14. On the spectrum analyzer, press **PEAK SEARCH**, **AMPLITUDE, MORE 1 OF 3**, **MORE 2 OF 3, PRESEL AUTO PK**. Wait for the PEAKING! message to disappear. Press **MKR, MARKERS OFF**.
15. Repeat steps 5 through 8 for the Agilent 8340A/B frequencies listed in Table 24, on page 652 for Band 1.
16. On the spectrum analyzer, press **MKR**, **MARKERS OFF, TRIG, SWEEP CONT**.
17. Press **RATIO** on the Agilent 8902A.

Band 2

18. On the spectrum analyzer, press **FREQUENCY**, **CENTER FREQ,** 9, **GHz**.
19. On the Agilent 8340A/B, set the CW to 9 GHz and POWER LEVEL to –10 dBm.
20. Enter the power sensor 9 GHz calibration factor into the Agilent 8902A.

ManualsPlus.com

21. On the spectrum analyzer, press **PEAK SEARCH**, **AMPLITUDE, MORE 1 OF 3, MORE 2 OF 3, PRESEL AUTO PK**. Wait for the PEAKING! message to disappear. Press **MKR, MARKERS OFF**.

22. Repeat steps 5 through 8 for the Agilent 8340A/B frequencies listed in Table 24, on page 652 for Band 2.

23. On the spectrum analyzer, press **MKR, MARKERS OFF, TRIG, SWEEP CONT**.

24. Press **RATIO** on the Agilent 8902A.

Table 10-33 Image, Multiple, and Out-of-Band Responses

Band	Agilent 8563E/EC Center Freq (GHz)	Agilent 8340A/B CW (MHz)	Response Amplitude (dBc)	Measurement Uncertainty (dB)
0	2.0	2021.4*		+0.82/–1.01
	2.0	2621.4*		+0.82/–1.01
	2.0	2321.4†		+0.82/–1.01
	2.0	2600.0†		+0.82/–1.01
	2.0	7910.7‡		+0.82/–1.01
	2.0	9821.4‡		+0.82/–1.01
1	4.0	4021.4*		+0.82/–1.01
	4.0	4621.4*		+0.82/–1.01
	4.0	4321.4†		+0.82/–1.01
	4.0	4600.0†		+0.82/–1.01
	4.0	8310.7‡		+0.82/–1.01
	4.0	8932.1‡		+0.82/–1.01
2	9.0	9021.4*		+0.82/–1.01
	9.0	9621.4*		+0.82/–1.01
	9.0	9321.4†		+0.82/–1.01
	9.0	9600.0†		+0.82/–1.01
	9.0	4344.65‡		+0.82/–1.01
	9.0	4966.05‡		+0.82/–1.01

* Image response
† Multiple response
‡ Out-of-band response

ManualsPlus.com

23. Image, Multiple, and Out-of-Band Responses: Agilent 8563E/EC

Instrument Under Test

Agilent 8563E/EC

Related Specification

Image, Multiple, and Out-of-Band Responses

Related Adjustment

RYTHM Adjustment

Description

Image, multiple, and out-of-band responses are tested in all frequency bands. A signal is applied to the signal analyzer INPUT 50 Ω, then a reference amplitude measurement is made. The signal source is then tuned to a frequency which causes either an image, multiple, or out-of-band response. The amplitude displayed on the spectrum analyzer is measured and recorded.

Figure 10-25 Image, Multiple, and Out-of-Band Responses Test Setup

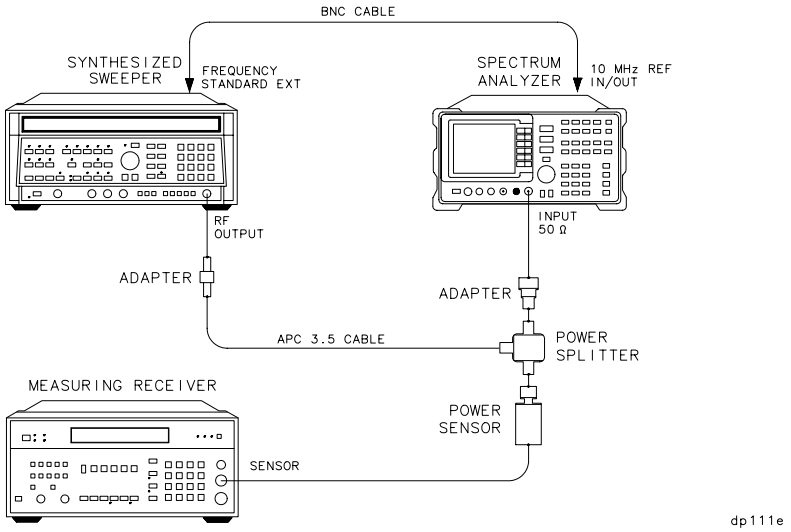

Equipment

Synthesized sweeper . . . . . Agilent 8340A/B

ManualsPlus.com

Measuring receiver . . . . . Agilent 8902A

Power sensor. . . . . Agilent 8485A

Power splitter . . . . . Agilent 11667B

Adapter

Type N (m) to APC 3.5 (m). 1250-1743

Cables

BNC, 122 cm (48 in.) . . . . . Agilent 10503A

APC 3.5, 91 cm (36 in.). 8120-4921

Procedure

Band 0

1. Connect the equipment as shown in Figure 10-25, but do not connect the power sensor to the power splitter.
2. On the Agilent 8340A/B, press **INSTR PRESET**. Set the controls as follows:

   CW frequency . . . . . .2 GHz

   Power level . . . . . –10 dBm

   Frequency standard switch (rear panel) . . . . . EXT
3. On the spectrum analyzer, press **PRESET, RECALL, MORE 1 OF 2**, **FACTORY PRSEL PK**. Set the controls as follows:

   Center frequency . . . . . .2 GHz

   Span . . . . . 10 kHz

   Reference level. . . . . –10 dBm

   Attenuation . . . . . 0 dB

   Resolution BW. . . . . 1 kHz
4. Zero and calibrate the Agilent 8902A and the Agilent 8485A. Enter the power sensor 2 GHz calibration factor into the Agilent 8902A. Connect the Agilent 8485A to the Agilent 11667B power splitter.
5. Adjust the Agilent 8340A/B power level to place the signal peak at the reference level.
6. Press **RATIO** on the Agilent 8902A.

ManualsPlus.com

7. On the spectrum analyzer, press **PEAK SEARCH, MKR →, MKR → REF LVL**, **SGL SWP**, **PEAK SEARCH, MARKER DELTA**.
8. For each of the frequencies listed in Table 10-34 for Band 0, do the following:
   a. Set the Agilent 8340A/B to the listed CW frequency.
   b. Enter the appropriate power sensor calibration factor into the Agilent 8902A.
   c. Set the Agilent 8340A/B power level for a 0 dB reading on the Agilent 8902A.
   d. On the spectrum analyzer, press **SGL SWP**. Wait for completion of the sweep before continuing. Press **PEAK SEARCH**, and record the Δ MKR amplitude in Table 10-34 as the response amplitude.
9. On the spectrum analyzer, press **MKR, MARKERS OFF, TRIG, SWEEP CONT**.
10. Press **RATIO** on the Agilent 8902A.

Band 1

11. On the spectrum analyzer, press **FREQUENCY**, **CENTER FREQ**, 4, **GHz**.
12. On the Agilent 8340A/B, set the CW to 4 GHz and POWER LEVEL to –10 dBm.
13. Enter the power sensor 4 GHz calibration factor into the Agilent 8902A.
14. On the spectrum analyzer, press **PEAK SEARCH, AMPLITUDE, MORE 1 OF 3, MORE 2 OF 3, PRESEL AUTO PK**. Wait for the PEAKING! message to disappear. Press **MKR, MARKERS OFF**.
15. Repeat steps 5 through 8 for the Agilent 8340A/B frequencies listed in Table 10-34 for Band 1.
16. On the spectrum analyzer, press **MKR**, **MARKERS OFF**, **TRIG, SWEEP CONT**.
17. Press **RATIO** on the Agilent 8902A.

Displayed Average Noise, Band 2

18. On the spectrum analyzer, press **FREQUENCY**, **CENTER FREQ,** 9, **GHz**.
19. On the Agilent 8340A/B, set the CW to 9 GHz and POWER LEVEL to –10 dBm.
20. Enter the power sensor 9 GHz calibration factor into the Agilent 8902A.

ManualsPlus.com

21. On the spectrum analyzer, press **PEAK SEARCH, AMPLITUDE, MORE 1 OF 3, MORE 2 OF 3, PRESEL AUTO PK**. Wait for the PEAKING! message to disappear. Press **MKR, MARKERS OFF**.
22. Repeat steps 5 through 8 for the Agilent 8340A/B frequencies listed in <Undefined Cross-Reference> for Band 2.
23. On the spectrum analyzer, press **MKR, MARKERS OFF, TRIG, SWEEP CONT**.
24. Press **RATIO** on the Agilent 8902A.

Band 3

25. On the spectrum analyzer, press **FREQUENCY**, **CENTER FREQ**, 15, **GHz**.
26. On the Agilent 8340A/B, set the CW to 15 GHz and POWER LEVEL to –10 dBm.
27. Enter the power sensor 15 GHz calibration factor into the Agilent 8902A.
28. On the spectrum analyzer, press **PEAK SEARCH**, **AMPLITUDE, MORE 1 OF 3, MORE 2 OF 3**, **PRESEL AUTO PK**. Wait for the PEAKING! message to disappear. Press **MKR, MARKERS OFF**.
29. Repeat steps 5 through 8 for the Agilent 8340A/B frequencies listed in <Undefined Cross-Reference> for Band 3 for 15 GHz center frequency.
30. On the spectrum analyzer, press **MKR**, **MARKERS OFF, TRIG, SWEEP CONT**.
31. Press **RATIO** on the Agilent 8902A.
32. On the spectrum analyzer, press **FREQUENCY**,**CENTER FREQ,** 20, **GHz**.
33. On the Agilent 8340A, set the CW to 20 GHz and POWER LEVEL to –10 dBm.
34. Enter the power sensor 20 GHz calibration factor into the Agilent 8902A.
35. On the spectrum analyzer, press **PEAK SEARCH, AMPLITUDE, MORE 1 OF 3**, **MORE 2 OF 3, PRESEL AUTO PK**. Wait for the PEAKING! message to disappear. Press **MKR**, **MARKERS OFF**.
36. Repeat steps 5 through 8 for the Agilent 8340A/B frequencies listed in Table 10-34 for Band 3 for 20 GHz center frequency.

ManualsPlus.com

Table 10-34 Image, Multiple, and Out-of-Band Responses

Band	Agilent 8563E/EC Center Freq (GHz)	Agilent 8340A/B CW (MHz)	Response Amplitude (dBc)	Measurement Uncertainty (dB)
0	2.0	2021.4*		+0.82/–1.01
	2.0	2621.4*		+0.82/–1.01
	2.0	2321.4†		+0.82/–1.01
	2.0	2600.0†		+0.82/–1.01
	2.0	7910.7‡		+0.82/–1.01
	2.0	9821.4‡		+0.82/–1.01
1	4.0	4021.4*		+0.82/–1.01
	4.0	4621.4*		+0.82/–1.01
	4.0	4321.4†		+0.82/–1.01
	4.0	4600.0†		+0.82/–1.01
	4.0	8310.7‡		+0.82/–1.01
	4.0	8932.1‡		+0.82/–1.01
2	9.0	9021.4*		+0.82/–1.01
	9.0	9621.4*		+0.82/–1.01
	9.0	9321.4†		+0.82/–1.01
	9.0	9600.0†		+0.82/–1.01
	9.0	18310.7‡		+0.82/–1.01
	9.0	18932.1‡		+0.82/–1.01

ManualsPlus.com

Table 10-34 Image, Multiple, and Out-of-Band Responses (Continued)

Band	Agilent 8563E/EC Center Freq (GHz)	Agilent 8340A/B CW (MHz)	Response Amplitude (dBc)	Measurement Uncertainty (dB)
3	15.0	15021.400*		+0.82/–1.08
	15.0	15621.400*		+0.82/–1.08
	15.0	22655.350†		+0.82/–1.08
	15.0	23276.750†		+0.82/–1.08
	15.0	7344.650‡		+0.82/–1.08
	15.0	7966.050‡		+0.82/–1.08
3	20.0	20021.400*		+0.82/–1.08
	20.0	20621.400*		+0.82/–1.08
	20.0	15543.725†		+0.82/–1.08
	20.0	25699.075†		+0.82/–1.08
	20.0	9844.650‡		+0.82/–1.08
	20.0	10466.050‡		+0.82/–1.08

* Image response
† Multiple response
‡ Out-of-band response

ManualsPlus.com

24. Image, Multiple, and Out-of-Band Responses: Agilent 8564E/EC

Instrument Under Test

Agilent 8564E/EC

Related Specification

Image, Multiple, and Out-of-Band Responses

Related Adjustment

RYTHM Adjustment, SBTX Adjustment

Description

Image, multiple, and out-of-band responses are tested in all frequency bands. A signal is applied to the signal analyzer INPUT 50 Ω, then a reference amplitude measurement is made. The signal source is then tuned to a frequency which causes either an image, multiple, or out-of-band response. The amplitude displayed on the spectrum analyzer is measured and recorded.

Figure 10-26 Image, Multiple, and Out-of-Band Responses Test Setup

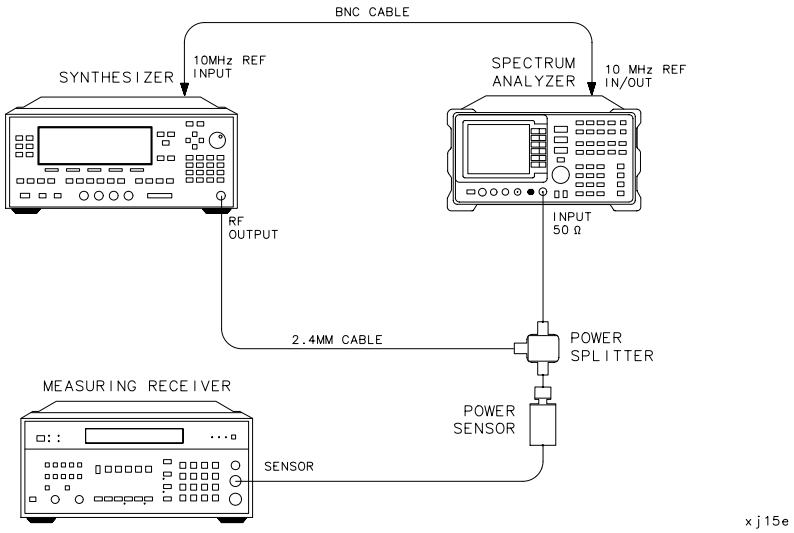

Equipment

Synthesized sweeper . . . . . Agilent 83650A

ManualsPlus.com

Measuring receiver . . . . . Agilent 8902A

Power sensor. . . . . Agilent 8487A

Power splitter . . . . . Agilent 11667C

Cables

BNC, 122 cm (48 in.) . . . . . Agilent 10503A

2.4 mm, 91 cm (36 in.) 8120-6164

Procedure

Band 0

1. Connect the equipment as shown in Figure 10-26, but do not connect the power sensor to the power splitter.
2. On the Agilent 83650A, press **PRESET**. Set the controls as follows:

   CW frequency . . . . . .2 GHz

   Power level . . . . . –10 dBm
3. On the spectrum analyzer, press **PRESET**, **RECALL, MORE 1 OF 2**, **FACTORY PRSEL PK**. Set the controls as follows:

   Center frequency . . . . . .2 GHz

   Span . . . . . 10 kHz

   Reference level. . . . . –10 dBm

   Attenuation . . . . . 0 dB

   Resolution BW. . . . . 1 kHz

   Video bandwidth . . . . . 100 Hz
4. Zero and calibrate the Agilent 8902A and the Agilent 8487A. Enter the power sensor 2 GHz calibration factor into the Agilent 8902A. Connect the Agilent 8487A to the Agilent 11667C power splitter.
5. Adjust the Agilent 83650A power level to place the signal peak at the reference level.
6. Press **RATIO** on the Agilent 8902A.
7. On the spectrum analyzer, press **PEAK SEARCH, MKR →**, **MKR → REF LVL, SGL SWP, PEAK SEARCH, MARKER DELTA**.

ManualsPlus.com

8. For each of the frequencies listed in Table 10-35 for Band 0, do the following:
   a. Set the Agilent 83650A to the listed CW frequency.
   b. Enter the appropriate power sensor calibration factor into the Agilent 8902A.
   c. Set the Agilent 83650A power level for a 0 dB reading on the Agilent 8902A.
   d. On the spectrum analyzer, press **SGL SWP**. Wait for completion of the sweep before continuing. Press **PEAK SEARCH**, and record the Δ MKR amplitude in Table 10-35 as the response amplitude.
9. On the spectrum analyzer, press **MKR, MARKERS OFF, TRIG, SWEEP CONT**.
10. Press **RATIO** on the Agilent 8902A.

Band 1

11. On the spectrum analyzer, press **FREQUENCY**, **CENTER FREQ**, 4, **GHz**.
12. On the Agilent 83650A, set the CW to 4 GHz and POWER LEVEL to –10 dBm.
13. Enter the power sensor 4 GHz calibration factor into the Agilent 8902A.
14. On the spectrum analyzer, press **PEAK SEARCH**, **AMPLITUDE, MORE 1 OF 3, MORE 2 OF 3**, **PRESEL AUTO PK**. Wait for the PEAKING! message to disappear. Press **MKR, MARKERS OFF**.
15. Repeat steps 5 through 8 for the Agilent 83650A frequencies listed in <Undefined Cross-Reference> for Band 1.
16. On the spectrum analyzer, press **MKR**, **MARKERS OFF**, **TRIG, SWEEP CONT**.
17. Press **RATIO** on the Agilent 8902A.

Band 2

18. On the spectrum analyzer, press **FREQUENCY, CENTER FREQ,** 9, **GHz**.
19. On the Agilent 83650A, set the CW to 9 GHz and POWER LEVEL to –10 dBm.
20. Enter the power sensor 9 GHz calibration factor into the Agilent 8902A.
21. On the spectrum analyzer, press **PEAK SEARCH**, **AMPLITUDE**, **MORE 1 OF 3**, **MORE 2 OF 3, PRESEL AUTO PK**. Wait for the PEAKING!

ManualsPlus.com

message to disappear. Press **MKR, MARKERS OFF**.

a. Repeat steps 5 through 8 for the Agilent 83650A frequencies listed in Table 10-35 for Band 2.

22. On the spectrum analyzer, press **MKR, MARKERS OFF, TRIG**, **SWEEP CONT**.

23. Press **RATIO** on the Agilent 8902A.

Band 3

24. On the spectrum analyzer, press **FREQUENCY**, **CENTER FREQ,** 15, **GHz**.

25. On the Agilent 83650A, set the CW to 15 GHz and POWER LEVEL to –10 dBm.

26. Enter the power sensor 15 GHz calibration factor into the Agilent 8902A.

27. On the spectrum analyzer, press **PEAK SEARCH**, **AMPLITUDE**, **MORE 1 OF 3**, **MORE 2 OF 3, PRESEL AUTO PK**. Wait for the `PEAKING!` message to disappear. Press **MKR, MARKERS OFF**.

28. Repeat steps 5 through 8 for the Agilent 83650A frequencies listed in <Undefined Cross-Reference> for Band 3 for 15 GHz center frequency.

29. On the spectrum analyzer, press **MKR**, **MARKERS OFF TRIG SWEEP CONT**.

30. Press **RATIO** on the Agilent 8902A.

31. On the spectrum analyzer, press **FREQUENCY, CENTER FREQ,** 20, **GHz**.

32. On the Agilent 83650A, set the CW to 20 GHz and POWER LEVEL to –10 dBm.

33. Enter the power sensor 20 GHz calibration factor into the Agilent 8902A.

34. On the spectrum analyzer, press **PEAK SEARCH**, **AMPLITUDE**, **MORE 1 OF 3, MORE 2 OF 3, PRESEL AUTO PK**. Wait for the `PEAKING!` message to disappear. Press **MKR, MARKERS OFF**.

35. Repeat steps 5 through 8 for the Agilent 83650A frequencies listed in Table 10-35 for Band 3 for 20 GHz center frequency.

Band 4

36. On the spectrum analyzer, press **FREQUENCY**, **CENTER FREQ**,

ManualsPlus.com

29, **GHz**.

37. On the Agilent 83650A, set the CW to 29 GHz and POWER LEVEL to –20 dBm.

38. Enter the power sensor 29 GHz calibration factor into the Agilent 8902A.

39. On the spectrum analyzer, press **PEAK SEARCH, AMPLITUDE**, –20, **dBm**, **ATTEN**, 10, **dB**, **MORE 1 OF 3, MORE 2 OF 3, PRESEL AUTO PK**. Wait for the PEAKING! message to disappear. Press **MKR, MARKERS OFF**.

40. Repeat steps 5 through 8 for the Agilent 83650A frequencies listed in Table 10-35 for Band 4 with 29 GHz center frequency.

41. On the spectrum analyzer, press **MKR**, **MARKERS OFF, TRIG**, **SWEEP CONT**.

Band 5

42. Press **RATIO** on the Agilent 8902A.

43. On the spectrum analyzer, press **FREQUENCY, CENTER FREQ**, 35, **GHz**.

44. On the Agilent 83650A, set the CW to 35 GHz and POWER LEVEL to –10 dBm.

45. Enter the power sensor 35 GHz calibration factor into the Agilent 8902A.

46. On the spectrum analyzer, press **PEAK SEARCH, AMPLITUDE**, **MORE 1 OF 3**, **MORE 2 OF 3**, **PRESEL AUTO PK**. Wait for the PEAKING! message to disappear. Press **MKR**, **MARKERS OFF**.

47. Repeat steps 5 through 8 for the Agilent 83650A frequencies listed in Table 10-35 for Band 5 for 35 GHz center frequency.

ManualsPlus.com

Table 10-35 Image, Multiple, and Out-of-Band Responses

Band	8564E/EC Center Freq (GHz)	Agilent 8340A/B CW (MHz)	Response Amplitude (dBc)	Measurement Uncertainty (dB)
0	2.0	2021.4*		+0.83/–0.88
	2.0	2621.4*		+0.83/–0.88
	2.0	2321.4†		+0.83/–0.88
	2.0	2600.0†		+0.83/–0.88
	2.0	7910.7‡		+0.83/–0.88
	2.0	9821.4‡		+0.83/–0.88
1	4.0	4021.4*		+0.83/–0.88
	4.0	4621.4*		+0.83/–0.88
	4.0	4321.4†		+0.83/–0.88
	4.0	4600.0†		+0.83/–0.88
	4.0	8310.7‡		+0.83/–0.88
	4.0	8932.1‡		+0.83/–0.88
2	9.0	9021.4*		+0.83/–0.88
	9.0	9621.4*		+0.83/–0.88
	9.0	9321.4†		+0.83/–0.88
	9.0	9600.0†		+0.83/–0.88
	9.0	18310.7‡		+0.83/–0.88
	9.0	18932.1‡		+0.83/–0.88

ManualsPlus.com

Table 10-35 Image, Multiple, and Out-of-Band Responses (Continued)

Band	8564E/EC Center Freq (GHz)	Agilent 8340A/B CW (MHz)	Response Amplitude (dBc)	Measurement Uncertainty (dB)
3	15.0	15021.400*		+0.85/–0.91
	15.0	15621.400*		+0.85/–0.91
	15.0	22655.350†		+0.85/–0.91
	15.0	23276.750†		+0.85/–0.91
	15.0	7344.650‡		+0.85/–0.91
	15.0	7966.050‡		+0.85/–0.91
3	20.0	20021.400*		+0.85/–0.91
	20.0	20621.400*		+0.85/–0.91
	20.0	15543.725†		+0.85/–0.91
	20.0	25699.075†		+0.85/–0.91
	20.0	9844.650‡		+0.85/–0.91
	20.0	10466.050‡		+0.85/–0.91
4	29.0	28378.600*		+0.88/–0.96
	29.0	23978.600*		+0.88/–0.96
	29.0	24450.925†		+0.88/–0.96
	29.0	28700.000†		+0.88/–0.96
	29.0	16455.350‡		+0.88/–0.96
	29.0	35272.325‡		+0.88/–0.96

ManualsPlus.com

Table 10-35 Image, Multiple, and Out-of-Band Responses (Continued)

Band	8564E/EC Center Freq (GHz)	Agilent 8340A/B CW (MHz)	Response Amplitude (dBc)	Measurement Uncertainty (dB)
5	35.0	35021.400*		+0.88/–0.96
	35.0	35621.400*		+0.88/–0.96
	35.0	33093.725†		+0.88/–0.96
	35.0	35321.400†		+0.88/–0.96
	35.0	8774.538‡		+0.88/–0.96
	35.0	15544.650‡		+0.88/–0.96

* Image response
† Multiple response
‡ Out-of-band response

ManualsPlus.com

25. Image, Multiple, and Out-of-Band Responses: Agilent 8565E/EC

Instrument Under Test

Agilent 8565E/EC

Related Specification

Image, Multiple, and Out-of-Band Responses

Related Adjustment

RYTHM Adjustment, SBTX Adjustment

Description

Image, multiple, and out-of-band responses are tested in all frequency bands. A signal is applied to the signal analyzer INPUT 50 Ω, then a reference amplitude measurement is made. The signal source is then tuned to a frequency which causes either an image, multiple, or out-of-band response. The amplitude displayed on the spectrum analyzer is measured and recorded.

Figure 10-27 Image, Multiple, and Out-of-Band Responses Test Setup

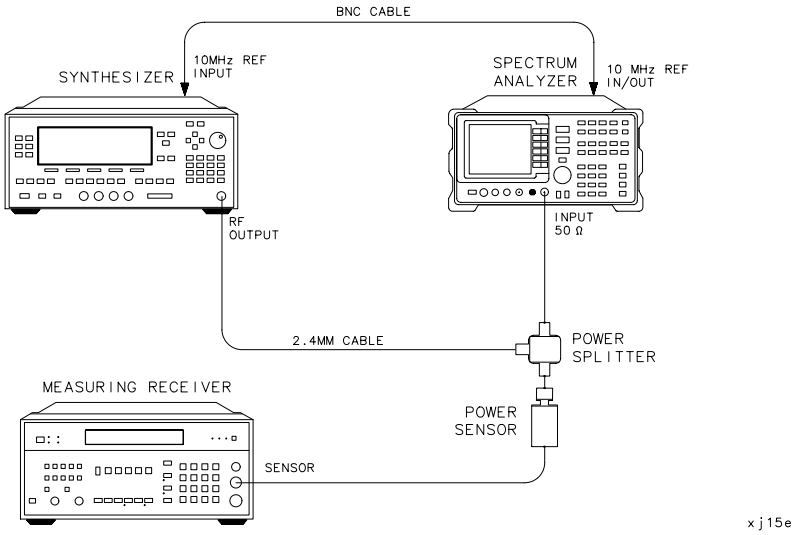

Equipment

Synthesized sweeper . . . . . Agilent 83650A

Measuring receiver . . . . . Agilent 8902A

ManualsPlus.com

Power sensor . . . . . Agilent 8487A

Power splitter . . . . . Agilent 11667C

Cables

BNC, 122 cm (48 in.) . . . . . Agilent 10503A

2.4 mm, 91 cm (36 in.) 8120-6164

Procedure

Band 0

1. Connect the equipment as shown in Figure 10-27, but do not connect the power sensor to the power splitter.
2. On the Agilent 83650A, press **PRESET**. Set the controls as follows:

   CW frequency . . . . . 2 GHz

   Power level . . . . . –10 dBm
3. On the spectrum analyzer, press **PRESET, RECALL, MORE 1 OF 2, FACTORY PRSEL PK**. Set the controls as follows:

   Center frequency . . . . . 2 GHz

   Span . . . . . 10 kHz

   Reference level. . . . . –10 dBm

   Attenuation . . . . . 0 dB

   Resolution BW . . . . . 1 kHz

   Video bandwidth . . . . . 100 Hz
4. Zero and calibrate the Agilent 8902A and the Agilent 8487A. Enter the power sensor 2 GHz calibration factor into the Agilent 8902A. Connect the Agilent 8487A to the Agilent 11667C power splitter.
5. Adjust the Agilent 83650A power level to place the signal peak at the reference level.
6. Press **RATIO** on the Agilent 8902A.
7. On the spectrum analyzer, press **PEAK SEARCH**, **MKR →**, **MKR → REF LVL, SGL SWP, PEAK SEARCH, MARKER DELTA**.
8. For each of the frequencies listed in Table 10-36 for Band 0, do the following:

   a. Set the Agilent 83650A to the listed CW frequency.

ManualsPlus.com

b. Enter the appropriate power sensor calibration factor into the Agilent 8902A.

c. Set the Agilent 83650A power level for a 0 dB reading on the Agilent 8902A.

d. On the spectrum analyzer, press **SGL SWP**. Wait for completion of the sweep before continuing. Press **PEAK SEARCH**, and record the Δ MKR amplitude in Table 10-36 as the response amplitude.

9. On the spectrum analyzer, press **MKR, MARKERS OFF, TRIG**, **SWEEP CONT**.

10. Press **RATIO** on the Agilent 8902A.

Band 1

11. On the spectrum analyzer, press **FREQUENCY, CENTER FREQ**, 4, **GHz**.

12. On the Agilent 83650A, set the CW to 4 GHz and POWER LEVEL to –10 dBm.

13. Enter the power sensor 4 GHz calibration factor into the Agilent 8902A.

14. On the spectrum analyzer, press **PEAK SEARCH**, **AMPLITUDE**, **MORE 1 OF 3, MORE 2 OF 3, PRESEL AUTO PK**. Wait for the PEAKING! message to disappear. Press **MKR, MARKERS OFF**.

15. Repeat steps 5 through 8 for the Agilent 83650A frequencies listed in Table 54, on page 672 for Band 1.

16. On the spectrum analyzer, press **MKR, MARKERS OFF**, **TRIG**, **SWEEP CONT**.

17. Press **RATIO** on the Agilent 8902A.

Band 2

18. On the spectrum analyzer, press **FREQUENCY**, **CENTER FREQ,** 9, **GHz**.

19. On the Agilent 83650A, set the CW to 9 GHz and POWER LEVEL to –10 dBm.

20. Enter the power sensor 9 GHz calibration factor into the Agilent 8902A.

21. On the spectrum analyzer, press **PEAK SEARCH**, **AMPLITUDE**, **MORE 1 OF 3**, **MORE 2 OF 3, PRESEL AUTO PK**. Wait for the PEAKING! message to disappear. Press **MKR, MARKERS OFF**.

22. Repeat steps 5 through 8 for the Agilent 83650A frequencies listed in Table 54, on page 672 for Band 2.

ManualsPlus.com

23. On the spectrum analyzer, press **MKR, MARKERS OFF**, **TRIG**, **SWEEP CONT**.
24. Press **RATIO** on the Agilent 8902A.

Band 3

25. On the spectrum analyzer, press **FREQUENCY**, **CENTER FREQ**, 15, **GHz**.
26. On the Agilent 83650A, set the CW to 15 GHz and POWER LEVEL to –10 dBm.
27. Enter the power sensor 15 GHz calibration factor into the Agilent 8902A.
28. On the spectrum analyzer, press **PEAK SEARCH, AMPLITUDE**, **MORE 1 OF 3**, **MORE 2 OF 3, PRESEL AUTO PK**. Wait for the PEAKING! message to disappear. Press **MKR, MARKERS OFF**.
29. Repeat steps 5 through 8 for the Agilent 83650A frequencies listed in Table 10-36 for Band 3 for 15 GHz center frequency.
30. On the spectrum analyzer, press **MKR, MARKERS OFF, TRIG**, **SWEEP CONT**.
31. Press **RATIO** on the Agilent 8902A.
32. On the spectrum analyzer, press **FREQUENCY**, **CENTER FREQ**, 20, **GHz**.
33. On the Agilent 83650A, set the CW to 20 GHz and POWER LEVEL to –10 dBm.
34. Enter the power sensor 20 GHz calibration factor into the Agilent 8902A.
35. On the spectrum analyzer, press **PEAK SEARCH**, **AMPLITUDE**, **MORE 1 OF 3, MORE 2 OF 3, PRESEL AUTO PK**. Wait for the PEAKING! message to disappear. Press **MKR**, **MARKERS OFF**.
36. Repeat steps 5 through 8 for the Agilent 83650A frequencies listed in Table 10-36 for Band 3 for 20 GHz center frequency.

Band 4

37. On the spectrum analyzer, press **FREQUENCY**, **CENTER FREQ**, 29, **GHz**.
38. On the Agilent 83650A, set the CW to 29 GHz and POWER LEVEL to –20 dBm.
39. Enter the power sensor 29 GHz calibration factor into the

ManualsPlus.com

Agilent 8902A.

40. On the spectrum analyzer, press **PEAK SEARCH**, **AMPLITUDE**, –20, **dBm**, **ATTEN**, 10, **dB**, **MORE 1 OF 3, MORE 2 OF 3, PRESEL AUTO PK**. Wait for the PEAKING! message to disappear. Press **MKR, MARKERS OFF**.

41. Repeat steps 5 through 8 for the Agilent 83650A frequencies listed in Table 10-36 for Band 4.

42. On the spectrum analyzer, press **MKR**, **MARKERS OFF, TRIG**, **SWEEP CONT**.

Band 5

43. Press **RATIO** on the Agilent 8902A.

44. On the spectrum analyzer, press **FREQUENCY, CENTER FREQ**, 35, **GHz**.

45. On the Agilent 83650A, set the CW to 35 GHz and POWER LEVEL to –10 dBm.

46. Enter the power sensor 35 GHz calibration factor into the Agilent 8902A.

47. On the spectrum analyzer, press **PEAK SEARCH, AMPLITUDE**, **MORE 1 OF 3, MORE 2 OF 3, PRESEL AUTO PK**. Wait for the PEAKING! message to disappear. Press **MKR**, **MARKERS OFF**.

48. Repeat steps 5 through 8 for the Agilent 83650A frequencies listed in Table 10-36 for Band 5 for 35 GHz center frequency.

49. Press **RATIO** on the Agilent 8902A.

50. On the spectrum analyzer, press **FREQUENCY**, **CENTER FREQ**, 45, **GHz**.

51. On the Agilent 83650A, set the CW to 45 GHz and POWER LEVEL to –10 dBm.

52. Enter the power sensor 45 GHz calibration factor into the Agilent 8902A.

53. On the spectrum analyzer, press **PEAK SEARCH**, **AMPLITUDE**, **MORE 1 OF 3, MORE 2 OF 3**, **PRESEL AUTO PK**. Wait for the PEAKING! message to disappear. Press **MKR, MARKERS OFF**.

54. Repeat steps 5 through 8 for the Agilent 83650A frequencies listed in Table 10-36 for Band 5 for 45 GHz center frequency.

ManualsPlus.com

Table 10-36 Image, Multiple, and Out-of-Band Responses

Band	Agilent 8565E/EC Center Freq (GHz)	Agilent 8340A/B CW (MHz)	Response Amplitude (dBc)	Measurement Uncertainty (dB)
0	2.0	2021.4*		+0.83/–0.88
	2.0	2621.4*		+0.83/–0.88
	2.0	2321.4†		+0.83/–0.88
	2.0	2600.0†		+0.83/–0.88
	2.0	7910.7‡		+0.83/–0.88
	2.0	9821.4‡		+0.83/–0.88
1	4.0	4021.4*		+0.83/–0.88
	4.0	4621.4*		+0.83/–0.88
	4.0	4321.4†		+0.83/–0.88
	4.0	4600.0†		+0.83/–0.88
	4.0	8310.7‡		+0.83/–0.88
	4.0	8932.1‡		+0.83/–0.88
2	9.0	9021.4*		+0.83/–0.88
	9.0	9621.4*		+0.83/–0.88
	9.0	9321.4†		+0.83/–0.88
	9.0	9600.0†		+0.83/–0.88
	9.0	18310.7‡		+0.83/–0.88
	9.0	18932.1‡		+0.83/–0.88

ManualsPlus.com

Table 10-36 Image, Multiple, and Out-of-Band Responses (Continued)

Band	Agilent 8565E/EC Center Freq (GHz)	Agilent 8340A/B CW (MHz)	Response Amplitude (dBc)	Measurement Uncertainty (dB)
3	15.0	15021.400*		+0.85/–0.91
	15.0	15621.400*		+0.85/–0.91
	15.0	22655.350†		+0.85/–0.91
	15.0	23276.750†		+0.85/–0.91
	15.0	7344.650‡		+0.85/–0.91
	15.0	7966.050‡		+0.85/–0.91
3	20.0	20021.400*		+0.85/–0.91
	20.0	20621.400*		+0.85/–0.91
	20.0	15543.725†		+0.85/–0.91
	20.0	25699.075†		+0.85/–0.91
	20.0	9844.650‡		+0.85/–0.91
	20.0	10466.050‡		+0.85/–0.91
4	29.0	28378.600*		+0.88/–0.96
	29.0	23978.600*		+0.88/–0.96
	29.0	24450.925†		+0.88/–0.96
	29.0	28700.000†		+0.88/–0.96
	29.0	16455.350‡		+0.88/–0.96
	29.0	35272.325‡		+0.88/–0.96

ManualsPlus.com

Table 10-36 Image, Multiple, and Out-of-Band Responses (Continued)

Band	Agilent 8565E/EC Center Freq (GHz)	Agilent 8340A/B CW (MHz)	Response Amplitude (dBc)	Measurement Uncertainty (dB)
5	35.0	35021.400*		+0.88/–0.96
	35.0	35621.400*		+0.88/–0.96
	35.0	33093.725†		+0.88/–0.96
	35.0	35321.400†		+0.88/–0.96
	35.0	8774.538‡		+0.88/–0.96
	35.0	15544.650‡		+0.88/–0.96
5	45.0	45021.400*		+0.94/–1.07
	45.0	45621.400*		+0.94/–1.07
	45.0	34479.888†		+0.94/–1.07
	45.0	40593.725†		+0.94/–1.07
	45.0	8316.975‡		+0.94/–1.07
	45.0	20544.650‡		+0.94/–1.07

* Image response
† Multiple response
‡ Out-of-band response

ManualsPlus.com

26. Frequency Readout/Frequency Count Marker Accuracy: 8560E/EC

Instrument Under Test

8560E/EC

Related Specification

Frequency Readout Accuracy
Frequency Count Marker Accuracy

Related Adjustment

YTO Adjustment
10 MHz Frequency Reference Adjustment

Description

The accuracy of the spectrum analyzer frequency readout/frequency count marker is tested with an input signal of known frequency. The spectrum analyzer provides the frequency reference for the synthesized sweeper, thus eliminating the (frequency readout × frequency readout accuracy) term. Performing the appropriate 10 MHz Reference Output Accuracy test satisfies checking the effect of this term.

Figure 10-28 Frequency Readout/Frequency Count Marker Accuracy Test Setup

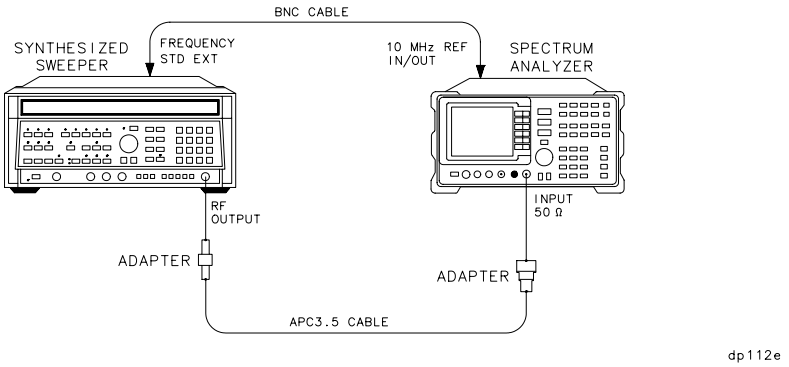

Equipment

Synthesized sweeper . . . . . Agilent 8340A/B

ManualsPlus.com

Adapters

Type N (m) to APC 3.5 (f). 1250-1744

APC 3.5 (f) to APC 3.5 (f) 5061-5311

Cables

APC 3.5, 91 cm (36 in) 8120-4921

BNC, 122 cm (48 in) . . . . . Agilent 10503A

Procedure

1. Connect the equipment as shown in Figure 10-28. The spectrum analyzer provides the frequency reference for the synthesized sweeper.

Frequency Readout Accuracy

2. On the Agilent 8340A/B, press **INSTR PRESET**. Set the controls as follows:

   CW frequency . . . . . 1.5 GHz

   Power level . . . . . –10 dBm

   Frequency standard switch (rear panel) . . . . . EXT

3. On the spectrum analyzer, press **PRESET**. Set the controls as follows:

   Center frequency . . . . . 1.5 GHz

   Span . . . . . 1 MHz

4. On the spectrum analyzer, press **PEAK SEARCH**.
5. Record the MKR frequency in Table 10-37 as the marker reading.
6. Repeat steps 4 and 5 for all frequency and span combinations listed in Table 10-37.

Frequency Count Marker Accuracy

7. On the spectrum analyzer press **SPAN,** 1, **MHz**, **FREQ COUNT**, **COUNTER RES,** 1, **Hz**.
8. Key in the Agilent 8340A/B CW frequencies and the spectrum analyzer center frequencies as indicated in Table 10-38. For the pair of settings, press **PEAK SEARCH** on the spectrum analyzer, and record the MKR frequency at each point, in Table 10-38.

ManualsPlus.com

Table 10-37 Frequency Readout Accuracy

Agilent 8340A/B Frequency (GHz)	8560E/EC		Marker Reading (GHz)	Measurement Uncertainty (Hz)
	Span	Center Freq		
1.5	1 MHz	1.5 GHz		±1
1.5	10 MHz	1.5 GHz		±1
1.5	20 MHz	1.5 GHz		±1
1.5	50 MHz	1.5 GHz		±1
1.5	100 MHz	1.5 GHz		±1
1.5	1 GHz	1.5 GHz		±1

Table 10-38 Frequency Count Marker Accuracy

Agilent 8340A/B Frequency (GHz)	8560E/EC Frequency (GHz)	Marker Frequency (GHz)	Measurement Uncertainty (Hz)
1.5	1.5		±1

ManualsPlus.com

27. Frequency Readout/Frequency Count Marker Accuracy: Agilent 8561E/EC

Instrument Under Test

Agilent 8561E/EC

Related Specification

Frequency Readout Accuracy
Frequency Count Marker Accuracy

Related Adjustment

YTO Adjustment
10 MHz Frequency Reference Adjustment

Description

The accuracy of the spectrum analyzer frequency readout/frequency count marker is tested with an input signal of known frequency. The spectrum analyzer provides the frequency reference for the synthesized sweeper, thus eliminating the (frequency readout × frequency readout accuracy) term. Performing the appropriate 10 MHz Reference Output Accuracy test satisfies checking the effect of this term.

Figure 10-29 Frequency Readout/Frequency Count Marker Accuracy Test Setup

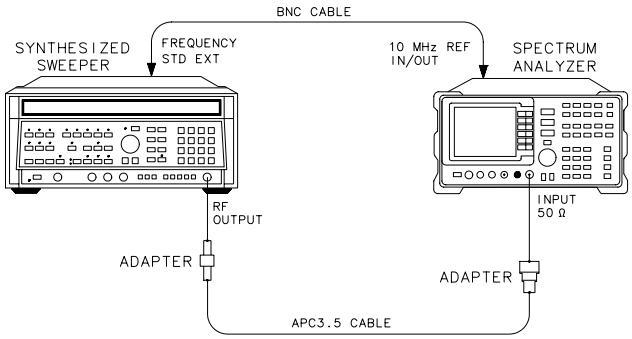

Equipment

Synthesized sweeper . . . . . .Agilent 8340A/B

ManualsPlus.com

Adapters

Type N (m) to APC 3.5 (f) 1250-1744

APC 3.5 (f) to APC 3.5 (f) 5061-5311

Cables

APC 3.5, 91 cm (36 in.) 8120-4921

BNC, 122 cm (48 in.) . . . . . Agilent 10503A

Procedure

1. Connect the equipment as shown in Figure 10-29. The spectrum analyzer provides the frequency reference for the synthesized sweeper.

Frequency Readout Accuracy

2. On the Agilent 8340A/B, press **INSTR PRESET**. Set the controls as follows:

   CW frequency . . . . . .1.5 GHz

   Power level . . . . . .–10 dBm

   Frequency standard switch (rear panel). . . . . .EXT

3. On the spectrum analyzer, press **PRESET**. Set the controls as follows:

   Center frequency . . . . . .1.5 GHz

   Span . . . . . .1 MHz

4. On the spectrum analyzer, press **PEAK SEARCH**.
5. Record the MKR frequency in Table 10-39 as the marker reading.
6. Repeat steps 4 and 5 for all frequency and span combinations listed in Table 10-39.

Frequency Count Marker Accuracy

7. On the spectrum analyzer press **SPAN,** 1, **MHz**, **FREQ COUNT**, **COUNTER RES**, 1, **Hz**.
8. Key in the Agilent 8340A/B CW frequencies and the spectrum analyzer center frequencies as indicated in Table 10-40. For the pair of settings, press **PEAK SEARCH** on the spectrum analyzer, and record the MKR frequency at each point, in Table 10-40.

ManualsPlus.com

Table 10-39 Frequency Readout Accuracy

Agilent 8340A/B Frequency (GHz)	Agilent 8561E/EC		Marker Reading (GHz)	Measurement Uncertainty (Hz)
	Span	Center Freq		
1.5	1 MHz	1.5 GHz		±1
1.5	10 MHz	1.5 GHz		±1
1.5	20 MHz	1.5 GHz		±1
1.5	50 MHz	1.5 GHz		±1
1.5	100 MHz	1.5 GHz		±1
1.5	1 GHz	1.5 GHz		±1
4.0	1 MHz	4 GHz		±1
4.0	10 MHz	4 GHz		±1
4.0	20 MHz	4 GHz		±1
4.0	50 MHz	4 GHz		±1
4.0	100 MHz	4 GHz		±1
4.0	1 GHz	4 GHz		±1

Table 10-40 Frequency Count Marker Accuracy

Agilent 8340A/B Frequency (GHz)	Agilent 8561E/EC Frequency (GHz)	Marker Frequency (GHz)	Measurement Uncertainty (Hz)
1.5	1.5		±1
4.0	4.0		±1

ManualsPlus.com

28. Frequency Readout Accuracy/Frequency Count Marker Accuracy: Agilent 8562E/EC

Instrument Under Test

Agilent 8562E/EC

Related Specification

Frequency Readout Accuracy
Frequency Count Marker Accuracy

Related Adjustment

YTO Adjustment
10 MHz Frequency Reference Adjustment

Description

The accuracy of the spectrum analyzer frequency readout/frequency count marker is tested with an input signal of known frequency. The spectrum analyzer provides the frequency reference for the synthesized sweeper, thus eliminating the (frequency readout × frequency reference accuracy) term. Performing the appropriate 10 MHz Reference Output Accuracy test in this chapter satisfies checking the effect of this term.

Figure 10-30 Frequency Readout Accuracy/Frequency Count Marker Accuracy Test Setup

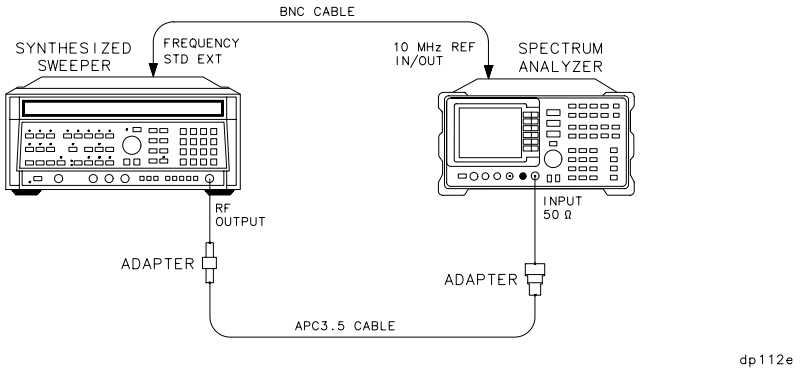

Equipment

Synthesized sweeper . . . . . Agilent 8340A/B

ManualsPlus.com

Adapter

Type N (m) to APC 3.5 (f). 1250-1744

Cables

APC 3.5, 91 cm (36 in.). 8120-4921

BNC, 122 cm (48 in.) . . . . . Agilent 10503A

Procedure

1. Connect the equipment as shown in Figure 10-30.

Frequency Readout Accuracy

2. On the 8340A, Press **INSTR PRESET**. Set the controls as follows:

   CW frequency . . . . . 1.5 GHz

   Power level . . . . . –10 dBm

   Frequency standard switch (REAR PANEL). . . . . EXT

3. On the spectrum analyzer, press **PRESET**. Set the controls as follows:

   Center frequency . . . . . 1.5 GHz

   Span . . . . . 1 MHz

4. On the spectrum analyzer, press **RECALL, MORE 1 OF 2, FACTORY PRSEL PK**.
5. On the spectrum analyzer, press **PEAK SEARCH**.
6. Record the MKR frequency in Table 10-41 as the marker reading.
7. Repeat steps 5 and 6 for all frequency and span combinations listed in Table 10-41. Peak the spectrum analyzer preselector after tuning the analyzer center frequency and the Agilent 8340A/B **CW** to frequencies of 4 GHz and above.

Frequency Count Marker Accuracy

8. On the spectrum analyzer, press **SPAN**, 1, **MHz**, **FREQ COUNT**, **COUNTER RES,** 1, **Hz**.
9. Key in the Agilent 8340A/B CW frequencies and the spectrum analyzer center frequencies as indicated in Table 10-42. Press **PEAK SEARCH**, and record the MKR frequency in Table 10-42.

ManualsPlus.com

Table 10-41 Frequency Readout Accuracy

Agilent 8340A/B Frequency (GHz)	Agilent 8563E/EC		Marker Reading (GHz)	Measurement Uncertainty (Hz)
	Span	Center Freq		
1.5	1 MHz	1.5 GHz		±1
1.5	10 MHz	1.5 GHz		±1
1.5	20 MHz	1.5 GHz		±1
1.5	50 MHz	1.5 GHz		±1
1.5	100 MHz	1.5 GHz		±1
1.5	1 GHz	1.5 GHz		±1
4.0	1 MHz	4 GHz		±1
4.0	10 MHz	4 GHz		±1
4.0	20 MHz	4 GHz		±1
4.0	50 MHz	4 GHz		±1
4.0	100 MHz	4 GHz		±1
4.0	1 GHz	4 GHz		±1
9.0	1 MHz	9.0 GHz		±2
9.0	10 MHz	9.0 GHz		±2
9.0	20 MHz	9.0 GHz		±2
9.0	50 MHz	9.0 GHz		±2
9.0	100 MHz	9.0 GHz		±2
9.0	1 GHz	9.0 GHz		±2

Table 10-42 Frequency Count Marker Accuracy

Agilent 8340A/B Frequency (GHz)	Agilent 8563E/EC Frequency (GHz)	Marker Frequency	Measurement Uncertainty (Hz)
1.5	1.5		±1
4.0	4.0		±1
9.0	9.0		±2

ManualsPlus.com

29. Frequency Readout Accuracy/Frequency Count Marker Accuracy: Agilent 8563E/EC

Instrument Under Test

Agilent 8563E/EC

Related Specification

Frequency Readout Accuracy
Frequency Count Marker Accuracy

Related Adjustment

YTO Adjustment
10 MHz Frequency Reference Adjustment

Description

The accuracy of the spectrum analyzer frequency readout/frequency count marker is tested with an input signal of known frequency. The spectrum analyzer provides the frequency reference for the synthesized sweeper, thus eliminating the (frequency readout × frequency reference accuracy) term. Performing the appropriate 10 MHz Reference Output Accuracy test in this chapter satisfies checking the effect of this term.

Figure 10-31 Frequency Readout Accuracy/Frequency Count Marker Accuracy Test Setup

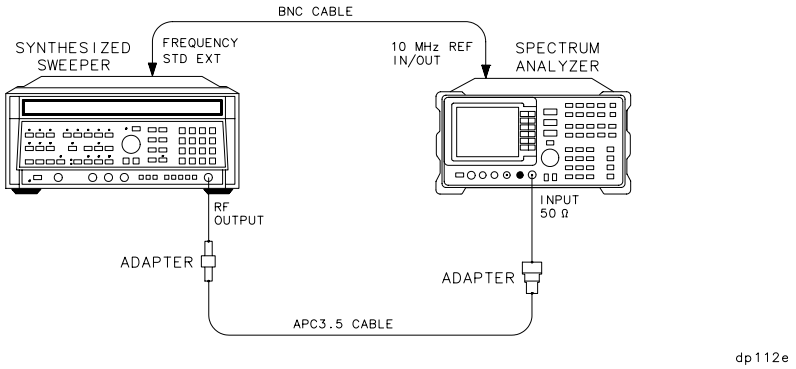

Equipment

Synthesized sweeper . . . . . .Agilent 8340A/B

ManualsPlus.com

Adapter

Type N (m) to APC 3.5 (f) 1250-1744

Cables

APC 3.5, 91 cm (36 in.) 8120-4921

BNC, 122 cm (48 in.) . . . . . Agilent 10503A

Procedure

1. Connect the equipment as shown in Figure 10-31.

Frequency Readout Accuracy

2. On the 8340A, Press **INSTR PRESET**. Set the controls as follows:

   CW frequency . . . . . .1.5 GHz

   Power level . . . . . .–10 dBm

   Frequency standard switch (REAR PANEL) . . . . . .EXT

3. On the spectrum analyzer, press **PRESET**. Set the controls as follows:

   Center frequency . . . . . .1.5 GHz

   Span . . . . . .1 MHz

4. On the spectrum analyzer, press **RECALL**, **MORE 1 OF 2, FACTORY PRSEL PK**.
5. On the spectrum analyzer, press **PEAK SEARCH**.
6. Record the MKR frequency in Table 10-43 as the marker reading.
7. Repeat steps 5 and 6 for all frequency and span combinations listed in Table 10-43. Peak the spectrum analyzer preselector after tuning the analyzer center frequency and the Agilent 8340A/B **CW** to frequencies of 4 GHz and above.

Frequency Count Marker Accuracy

8. On the spectrum analyzer, press **SPAN,** 1, **MHz**, **FREQ COUNT**, **COUNTER RES**, 1, **Hz**.
9. Key in the Agilent 8340A/B CW frequencies and the spectrum analyzer center frequencies as indicated in Table 10-44. Press **PEAK SEARCH**, and record the MKR frequency in Table 10-44.

ManualsPlus.com

Table 10-43 Frequency Readout Accuracy

Agilent 8340A/B Frequency (GHz)	Agilent 8563E/EC		Marker Reading (GHz)	Measurement Uncertainty (Hz)
	Span	Center Freq		
1.5	1 MHz	1.5 GHz		±1
1.5	10 MHz	1.5 GHz		±1
1.5	20 MHz	1.5 GHz		±1
1.5	50 MHz	1.5 GHz		±1
1.5	100 MHz	1.5 GHz		±1
1.5	1 GHz	1.5 GHz		±1
4.0	1 MHz	4 GHz		±1
4.0	10 MHz	4 GHz		±1
4.0	20 MHz	4 GHz		±1
4.0	50 MHz	4 GHz		±1
4.0	100 MHz	4 GHz		±1
4.0	1 GHz	4 GHz		±1
9.0	1 MHz	9.0 GHz		±2
9.0	10 MHz	9.0 GHz		±2
9.0	20 MHz	9.0 GHz		±2
9.0	50 MHz	9.0 GHz		±2
9.0	100 MHz	9.0 GHz		±2
9.0	1 GHz	9.0 GHz		±2
16.0	1 MHz	16.0 GHz		±3
16.0	10 MHz	16.0 GHz		±3
16.0	20 MHz	16.0 GHz		±3
16.0	50 MHz	16.0 GHz		±3
16.0	100 MHz	16.0 GHz		±3
16.0	1 GHz	16.0 GHz		±3
21.0	1 MHz	21.0 GHz		±4
21.0	10 MHz	21.0 GHz		±4
21.0	20 MHz	21.0 GHz		±4
21.0	50 MHz	21.0 GHz		±4
21.0	100 MHz	21.0 GHz		±4
21.0	1 GHz	21.0 GHz		±4

ManualsPlus.com

Table 10-44 Frequency Count Marker Accuracy

Agilent 8340A/B Frequency (GHz)	Agilent 8563E/EC Frequency (GHz)	Marker Frequency	Measurement Uncertainty (Hz)
1.5	1.5		±1
4.0	4.0		±1
9.0	9.0		±2
16.0	16.0		±3
21.0	21.0		±4

ManualsPlus.com

30. Frequency Readout Accuracy/Frequency Count Marker Accuracy: Agilent 8564E/EC

Instrument Under Test

Agilent 8564E/EC

Related Specification

Frequency Readout Accuracy
Frequency Count Marker Accuracy

Related Adjustment

YTO Adjustment
10 MHz Frequency Reference Adjustment

Description

The accuracy of the spectrum analyzer frequency readout/frequency count marker is tested with an input signal of known frequency. The spectrum analyzer provides the frequency reference for the synthesized sweeper, thus eliminating the (frequency readout × frequency reference accuracy) term. Performing the appropriate 10 MHz Reference Output Accuracy test in this chapter satisfies checking the effect of this term.

Figure 10-32 Frequency Readout Accuracy/Frequency Count Marker Accuracy Test Setup

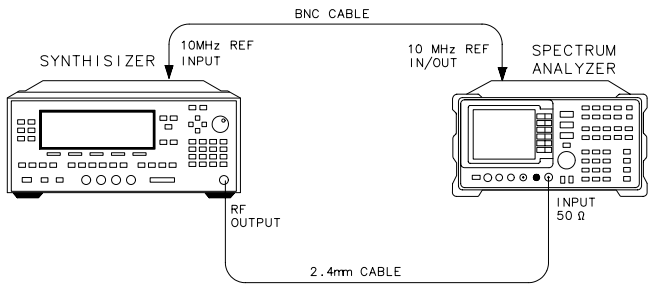

xj17e

Equipment

Synthesized sweeper . . . . . Agilent 83650A

ManualsPlus.com

Adapter

2.4 mm (f) to 2.4 mm (f). . . . . Agilent 11900B

Cables

2.4 mm, 91 cm (36 in.). 8120-6164

BNC, 122 cm (48 in.) . . . . . Agilent 10503A

Procedure

1. Connect the equipment as shown in Figure 10-32.

Frequency Readout Accuracy

2. On the 83650A, Press **PRESET**. Set the controls as follows:

   CW frequency . . . . . .1.5 GHz

   Power level . . . . . .–10 dBm

3. On the spectrum analyzer, press **PRESET**. Set the controls as follows:

   Center frequency . . . . . .1.5 GHz

   Span . . . . . 1 MHz

4. On the spectrum analyzer, press **RECALL, MORE 1 OF 2, FACTORY PRSEL PK**.
5. On the spectrum analyzer, press **PEAK SEARCH**.
6. Record the MKR frequency in Table 10-45 as the marker reading.
7. Repeat steps 5 and 6 for all frequency and span combinations listed in Table 10-45. Peak the spectrum analyzer preselector after tuning the analyzer center frequency and the Agilent 83650A **CW** to frequencies of 4 GHz and above.

Frequency Count Marker Accuracy

8. On the spectrum analyzer, press **SPAN**, 1, **MHz**, **FREQ COUNT**, **COUNTER RES,** 1, **Hz**.
9. Key in the Agilent 83650A CW frequencies and the spectrum analyzer center frequencies as indicated in Table 10-46. Press **PEAK SEARCH**, and record the MKR frequency in Table 10-46.

ManualsPlus.com

Table 10-45 Frequency Readout Accuracy

Agilent 8340A/B Frequency (GHz)	Agilent 8564E/EC		Marker Reading (GHz)	Measurement Uncertainty (Hz)
	Span	Center Freq		
1.5	1 MHz	1.5 GHz		±1
1.5	10 MHz	1.5 GHz		±1
1.5	20 MHz	1.5 GHz		±1
1.5	50 MHz	1.5 GHz		±1
1.5	100 MHz	1.5 GHz		±1
1.5	1 GHz	1.5 GHz		±1
4.0	1 MHz	4 GHz		±1
4.0	10 MHz	4 GHz		±1
4.0	20 MHz	4 GHz		±1
4.0	50 MHz	4 GHz		±1
4.0	100 MHz	4 GHz		±1
4.0	1 GHz	4 GHz		±1
9.0	1 MHz	9.0 GHz		±2
9.0	10 MHz	9.0 GHz		±2
9.0	20 MHz	9.0 GHz		±2
9.0	50 MHz	9.0 GHz		±2
9.0	100 MHz	9.0 GHz		±2
9.0	1 GHz	9.0 GHz		±2
16.0	1 MHz	16.0 GHz		±3
16.0	10 MHz	16.0 GHz		±3
16.0	20 MHz	16.0 GHz		±3
16.0	50 MHz	16.0 GHz		±3
16.0	100 MHz	16.0 GHz		±3
16.0	1 GHz	16.0 GHz		±3
21.0	1 MHz	21.0 GHz		±4
21.0	10 MHz	21.0 GHz		±4
21.0	20 MHz	21.0 GHz		±4

ManualsPlus.com

Table 10-45 Frequency Readout Accuracy (Continued)

Agilent 8340A/B Frequency (GHz)	Agilent 8564E/EC		Marker Reading (GHz)	Measurement Uncertainty (Hz)
	Span	Center Freq		
21.0	50 MHz	21.0 GHz		±4
21.0	100 MHz	21.0 GHz		±4
21.0	1 GHz	21.0 GHz		±4
29.0	1 MHz	29.0 GHz		±6
29.0	10 MHz	29.0 GHz		±6
29.0	20 MHz	29.0 GHz		±6
29.0	50 MHz	29.0 GHz		±6
29.0	100 MHz	29.0 GHz		±6
29.0	1 GHz	29.0 GHz		±6
35.0	1 MHz	35.0 GHz		±6
35.0	10 MHz	35.0 GHz		±6
35.0	20 MHz	35.0 GHz		±6
35.0	50 MHz	35.0 GHz		±6
35.0	100 MHz	35.0 GHz		±6
35.0	1 GHz	35.0 GHz		±6

Table 10-46 Frequency Count Marker Accuracy

Agilent 8340A/B Frequency (GHz)	Agielnt 8564E/EC Frequency (GHz)	Marker Frequency	Measurement Uncertainty (Hz)
1.5	1.5		±1
4.0	4.0		±1
9.0	9.0		±2
16.0	16.0		±3
21.0	21.0		±4
29.0	29.0		±6
35.0	35.0		±6

ManualsPlus.com

31. Frequency Readout Accuracy/Frequency Count& Marker Accuracy: Agilent 8565E/EC

Instrument Under Test

Agilent 8565E/EC

Related Specification

Frequency Readout Accuracy
Frequency Count Marker Accuracy

Related Adjustment

YTO Adjustment
10 MHz Frequency Reference Adjustment

Description

The accuracy of the spectrum analyzer frequency readout/frequency count marker is tested with an input signal of known frequency. The spectrum analyzer provides the frequency reference for the synthesized sweeper, thus eliminating the (frequency readout × frequency reference accuracy) term. Performing the appropriate 10 MHz Reference Output Accuracy test in this chapter satisfies checking the effect of this term.

Figure 10-33 Frequency Readout Accuracy/Frequency Count Marker Accuracy Test Setup

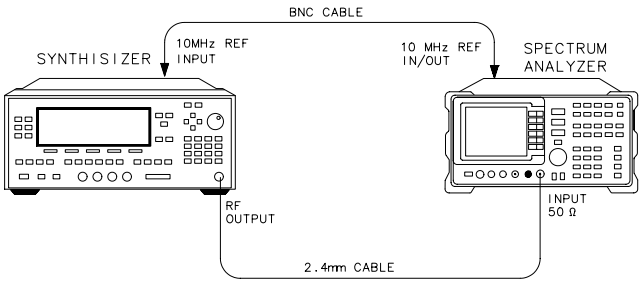

xj17e

Equipment

Synthesized sweeper . . . . . Agilent 83650A

ManualsPlus.com

Adapter

2.4 mm (f) to 2.4 mm (f). . . . . Agilent 11900B

Cables

2.4 mm, 91 cm (36 in.). 8120-6164

BNC, 122 cm (48 in.) . . . . . Agilent 10503A

Procedure

1. Connect the equipment as shown in Figure 10-33.

Frequency Readout Accuracy

2. On the 83650A, Press **PRESET**. Set the controls as follows:

   CW frequency . . . . . .1.5 GHz

   Power level . . . . . .–10 dBm

3. On the spectrum analyzer, press **PRESET**. Set the controls as follows:

   Center frequency . . . . . .1.5 GHz

   Span . . . . . 1 MHz

4. On the spectrum analyzer, press **RECALL, MORE 1 OF 2, FACTORY PRSEL PK**.
5. On the spectrum analyzer, press **PEAK SEARCH**.
6. Record the MKR frequency in Table 10-47 as the marker reading.
7. Repeat steps 5 and 6 for all frequency and span combinations listed in Table 10-47. Peak the spectrum analyzer preselector after tuning the analyzer center frequency and the Agilent 83650A **CW** to frequencies of 4 GHz and above.

Frequency Count Marker Accuracy

8. On the spectrum analyzer, press **SPAN,** 1, **MHz**, **FREQ COUNT**, **COUNTER RES,** 1, **Hz**.
9. Key in the Agilent 83650A CW frequencies and the spectrum analyzer center frequencies as indicated in Table 10-48. Press **PEAK SEARCH**, and record the MKR frequency in Table 10-48.

ManualsPlus.com

Table 10-47 Frequency Readout Accuracy

Agilent 8340A/B Frequency (GHz)	Agilent 8565E/EC		Marker Reading (GHz)	Measurement Uncertainty (Hz)
	Span	Center Freq		
1.5	1 MHz	1.5 GHz		±1
1.5	10 MHz	1.5 GHz		±1
1.5	20 MHz	1.5 GHz		±1
1.5	50 MHz	1.5 GHz		±1
1.5	100 MHz	1.5 GHz		±1
1.5	1 GHz	1.5 GHz		±1
4.0	1 MHz	4 GHz		±1
4.0	10 MHz	4 GHz		±1
4.0	20 MHz	4 GHz		±1
4.0	50 MHz	4 GHz		±1
4.0	100 MHz	4 GHz		±1
4.0	1 GHz	4 GHz		±1
9.0	1 MHz	9.0 GHz		±2
9.0	10 MHz	9.0 GHz		±2
9.0	20 MHz	9.0 GHz		±2
9.0	50 MHz	9.0 GHz		±2
9.0	100 MHz	9.0 GHz		±2
9.0	1 GHz	9.0 GHz		±2
16.0	1 MHz	16.0 GHz		±3
16.0	10 MHz	16.0 GHz		±3
16.0	20 MHz	16.0 GHz		±3
16.0	50 MHz	16.0 GHz		±3
16.0	100 MHz	16.0 GHz		±3
16.0	1 GHz	16.0 GHz		±3
21.0	1 MHz	21.0 GHz		±4
21.0	10 MHz	21.0 GHz		±4
21.0	20 MHz	21.0 GHz		±4
21.0	50 MHz	21.0 GHz		±4

ManualsPlus.com

Table 10-47 Frequency Readout Accuracy (Continued)

Agilent 8340A/B Frequency (GHz)	Agilent 8565E/EC		Marker Reading (GHz)	Measurement Uncertainty (Hz)
	Span	Center Freq		
21.0	100 MHz	21.0 GHz		±4
21.0	1 GHz	21.0 GHz		±4
29.0	1 MHz	29.0 GHz		±6
29.0	10 MHz	29.0 GHz		±6
29.0	20 MHz	29.0 GHz		±6
29.0	50 MHz	29.0 GHz		±6
29.0	100 MHz	29.0 GHz		±6
29.0	1 GHz	29.0 GHz		±6
35.0	1 MHz	35.0 GHz		±6
35.0	10 MHz	35.0 GHz		±6
35.0	20 MHz	35.0 GHz		±6
35.0	50 MHz	35.0 GHz		±6
35.0	100 MHz	35.0 GHz		±6
35.0	1 GHz	35.0 GHz		±6
45.0	1 MHz	45.0 GHz		±8
45.0	10 MHz	45.0 GHz		±8
45.0	20 MHz	45.0 GHz		±8
45.0	50 MHz	45.0 GHz		±8
45.0	100 MHz	45.0 GHz		±8
45.0	1 GHz	45.0 GHz		±8

ManualsPlus.com

Table 10-48 Frequency Count Marker Accuracy

Agilent 8340A/B Frequency (GHz)	Agielnt 8565E/EC Frequency (GHz)	Marker Frequency	Measurement Uncertainty (Hz)
1.5	1.5		±1
4.0	4.0		±1
9.0	9.0		±2
16.0	16.0		±3
21.0	21.0		±4
29.0	29.0		±6
35.0	35.0		±6
45.0	45.0		±8

ManualsPlus.com

32. Pulse Digitization Uncertainty

Instrument Under Test

All 8560 E-Series and EC-Series

Related Specification

Pulse Digitization Uncertainty

Related Adjustment

There is no related adjustment procedure for this performance test.

Description

This test measures the ability of the spectrum analyzer analog-to-digital circuitry to respond to pulsed RF signals. The synthesized sweeper is phase-locked to the spectrum analyzer 10 MHz reference. The only log scale tested is 5 dB/DIV, because this is the worst case. Linear scale is also tested.

Figure 10-34 Pulse Digitization Uncertainty Test Setup

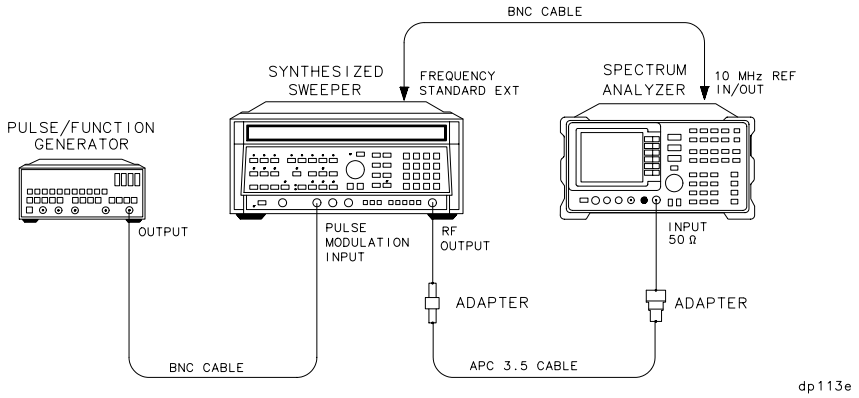

Equipment

Synthesized sweeper . . . . . Agilent 8340A/B

Pulse/function generator. . . . . Agilent 8116A

Adapters

Type N (m) to APC 3.5 (f) 1250-1744

APC 3.5 (f) to APC 3.5 (f) 5061-5311

ManualsPlus.com

Type N (f) to 2.4 mm (f) . . . . . Agilent 11903B

(*for Agilent 8564E/EC and Agilent 8565E/EC*)

Cables

BNC, 122 cm (48 in.) *(2 required)* . . . . . Agilent 10503A

APC 3.5, 91 cm (36 in.). 8120-4921

Procedure

1. Connect the equipment as shown in Figure 10-34.
2. On the Agilent 8340A/B, press **INSTR PRESET**. Set the controls as follows:

   CW frequency . . . . . 2500 MHz

   Modulation. . . . . .PULSE

   Power level . . . . . .–15 dB

   RF output. . . . . on

   Leveling . . . . . Internal

   Frequency standard switch (rear panel) . . . . . EXT

3. Set the Agilent 8116A controls as follows:

   Function. . . . . Pulse

   Frequency . . . . . 144 kHz

   Pulse width . . . . . 200 ns

   Amplitude . . . . . .5.0 V

   Offset . . . . . .0.0 V

   Mode. . . . . .Normal

   CTRL . . . . . .off

4. On the spectrum analyzer, press **PRESET**, **TRACE, MORE 1 OF 3**, **DETECTOR MODES, DETECTOR POS PEAK**. Set the controls as follows:

   Center frequency. . . . . 2500 MHz

   Span . . . . . 0 Hz

   Reference level. . . . . –10 dBm

   Resolution BW. . . . . 1 MHz

   Video BW . . . . . 3 MHz

ManualsPlus.com

Sweep time . . . . . 50 ms

dB/division . . . . . .5 dB

5. On the Agilent 8116A, use the RANGE switch to set FREQ to 144 kHz.
6. On the spectrum analyzer, press **SGL SWP, PEAK SEARCH**. In Table 10-49, record the marker amplitude reading as the maximum level for 144 kHz PRF.
7. Press **MKR**. Using the RPG knob, move the marker until it is at the lowest point on the trace. In Table 10-49, record the marker amplitude reading as the minimum level for 144 kHz PRF.
8. On the Agilent 8116A, use the RANGE switch to set FREQ to 14.4 kHz.
9. On the spectrum analyzer, press **SGL SWP**, **SGL SWP**, **PEAK SEARCH**. In Table 10-49, record the marker amplitude reading as the maximum level for 14.4 kHz PRF.
10. Press **MKR**. Using the RPG knob, move the marker until it is at the lowest point on the trace. In Table 10-49, record the marker amplitude reading as the minimum level for 14.4 kHz PRF.
11. On the spectrum analyzer, press **AMPLITUDE**, **LINEAR**, **TRIG**, **SWEEP CONT, AMPLITUDE, REF LVL**. Adjust the reference level to place the trace one division below the top of the screen. Note the reference level setting in Table 10-49.
12. Repeat steps 5 through 10 for the linear scale.
13. On the spectrum analyzer, press **BW, RES BW,** 2, **MHz**. Press **AMPLITUDE, LOG dB/DIV,** 5, **dB**, **TRIG, SWEEP CONT**, **AMPLITUDE, REF LVL,** –10, **dBm**.
14. Repeat steps 5 through 12.
15. For each row of entries in Table 10-49 for the Log 5 dB/DIV scale, subtract the lowest Min. marker amplitude reading from the highest maximum marker amplitude reading. Record the result as the PDU (pulse digitization uncertainty).
16. For each row of entries in Table 10-49 for the linear scale, calculate the PDU as a percentage of reference level using the equation below.

PDU = 100 × [(highest max. marker amplitude – lowest min. marker amplitude) /reference level setting]

ManualsPlus.com

Table 10-49 Pulse Digitization Uncertainty

Res BW	Scale	Marker Amplitude Readings				PDU	Ref Level
		144 kHz PRF		14.4 kHz PRF			
		Max.	Min.	Max.	Min.		
1 MHz	Log 5 dB/DIV	dBm	dBm	dBm	dBm	dB	N/A
1 MHz	Linear	mV	mV	mV	mV	%	mV
2 MHz	Log 5 dB/DIV	dBm	dBm	dBm	dBm	dB	N/A
2 MHz	Linear	mV	mV	mV	mV	%	mV

ManualsPlus.com

33. Second Harmonic Distortion: Agilent 8560E/EC

Instrument Under Test

8560E/EC

Related Specification

Second Harmonic Distortion

Related Adjustment

There is no related adjustment procedure for this performance test.

Description

A synthesizer/level generator and low-pass filter provide the signal for measuring second harmonic distortion. The low-pass filter eliminates any harmonic distortion originating at the signal source. The synthesizer is phase-locked to the spectrum analyzer 10 MHz reference. This test is performed at an input frequency of 40 MHz.

Figure 10-35 Second Harmonic Distortion Test Setup

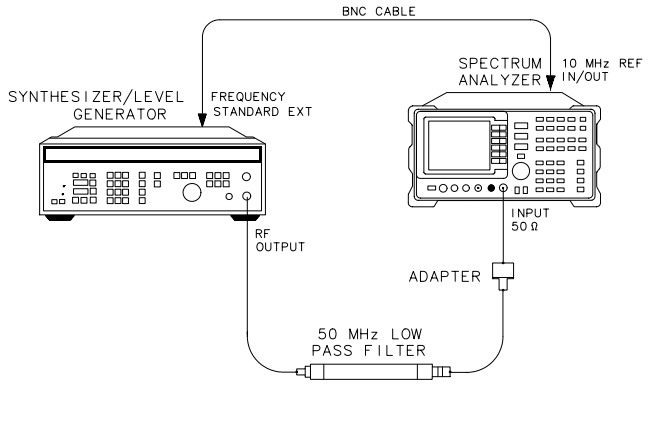

Equipment

Synthesizer/level generator . . . . . Agilent 3335A

50 MHz low-pass filter 0955-0306

Adapter

ManualsPlus.com

Type N (m) to BNC (f) *(2 required)* 1250-1476

Cable

BNC, 122 cm (48 in) *(2 required)*. . . . . Agilent 10503A

Procedure

1. Connect the equipment as shown in Figure 10-35. The spectrum analyzer provides the frequency reference for the synthesizer.
2. Set the Agilent 3335A controls as follows:

   Frequency . . . . . 40 MHz

   Amplitude. . . . . –30 dBm

   Amplitude increment . . . . . .0.05 dB

   Output . . . . . 50 Ω
3. On the spectrum analyzer, press **PRESET**. Set the controls as follows:

   Center frequency. . . . . 40 MHz

   Span . . . . . 1 kHz

   Reference level. . . . . –30 dBm
4. On the spectrum analyzer, press **PEAK SEARCH**. On the Agilent 3335A adjust the output power level for a spectrum analyzer marker amplitude reading of –30 dBm ±0.17 dB.
5. On the spectrum analyzer, press **SGL SWP**. Wait for the completion of the sweep, then press **PEAK SEARCH**, **MKR→**, **MARKER → CF STEP**.
6. Press **MKR, MARKER DELTA**, **FREQUENCY,** ⇑, **SGL SWP**.
7. After the spectrum analyzer completes a new sweep, press **PEAK SEARCH**. Record the Δ MKR amplitude reading as the Second Harmonic Distortion.

   Second harmonic distortion:_____ dBc

   (Measurement uncertainty: +1.87/–2.28 dB)

ManualsPlus.com

34. Second Harmonic Distortion: Agilent 8561E/EC

Instrument Under Test

Agilent 8561E/EC

Related Specification

Second Harmonic Distortion

Related Adjustment

There is no related adjustment procedure for this performance test.

Description

A synthesizer/level-generator (or synthesized sweeper) and low-pass filter provide the signal for measuring second harmonic distortion. The low-pass filter eliminates any harmonic distortion originating at the signal source. The spectrum analyzer frequency response is calibrated out for the >1.45 GHz test. The synthesizer (or synthesized sweeper) is phase-locked to the spectrum analyzer 10 MHz reference.

Figure 10-36 Second Harmonic Distortion Test Setup, Band 0

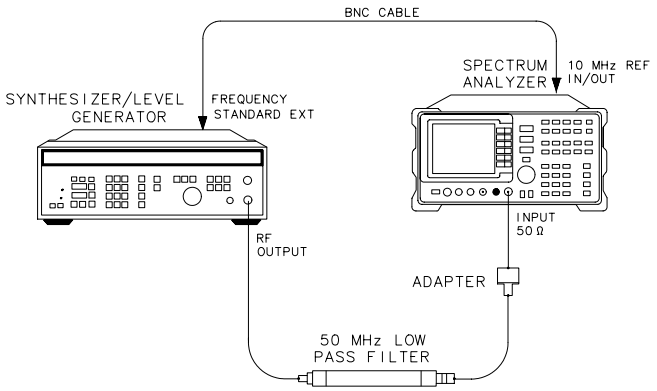

ManualsPlus.com

Figure 10-37 Second Harmonic Distortion Test Setup, Band 1

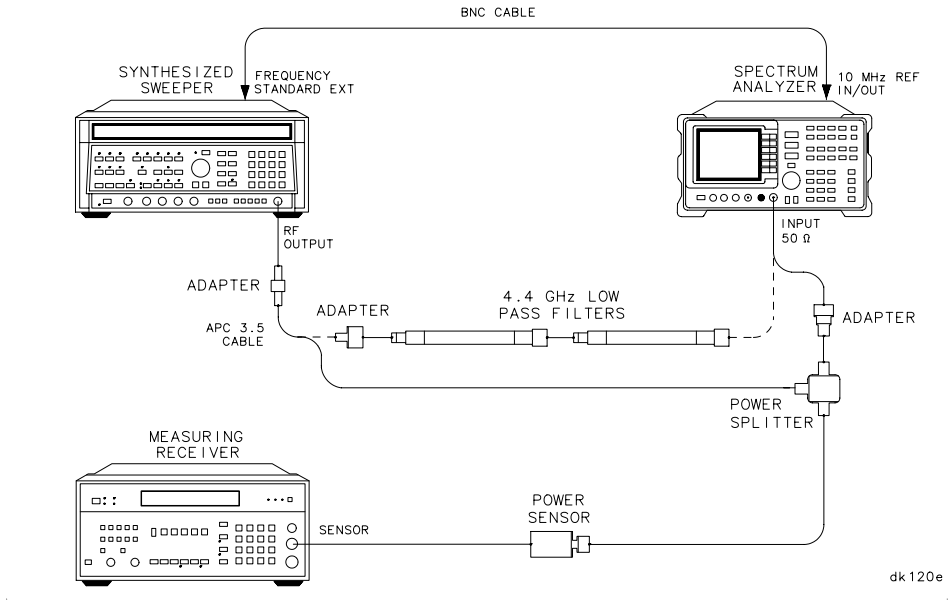

Equipment

Synthesized sweeper . . . . . Agilent 8340A/B

Synthesizer/level generator . . . . . Agilent 3335A

Measuring receiver . . . . . Agilent 8902A

Power sensor. . . . . Agilent 8485A

50 MHz low-pass filter 0955-0306

4.4 GHz low-pass filter *(2 required)* . . . . . Agilent 11689A

Power splitter . . . . . Agilent 11667B

Adapters

Type N (m) to BNC (f) *(2 required)* 1250-1476

Type N (m) to SMA (f) 1250-1250

Type N (f) to APC 3.5 (f). 1250-1745

Type N (m) to APC 3.5 (m). 1250-1743

APC 3.5 (f) to APC 3.5 (f) 5061-5311

Cables

BNC, 122 cm (48 in.) *(2 required)* . . . . . Agilent 10503A

APC 3.5, 91 cm (36 in.). 8120-4921

ManualsPlus.com

Procedure

Second Harmonic Distortion, <1.45 GHz

1. Connect the equipment as shown in Figure 10-36, using the 50 MHz low-pass filter. The spectrum analyzer provides the frequency reference for the synthesizer.
2. Set the Agilent 3335A controls as follows:

   Frequency . . . . . 40 MHz

   Amplitude . . . . . –30 dBm

   Amplitude increment . . . . . 0.05 dB

   Output. . . . . 50 Ω

3. On the spectrum analyzer, press **PRESET**. Set the controls as follows:

   Center frequency . . . . . 40 MHz

   Span . . . . . 1 kHz

   Reference level . . . . . –30 dBm

4. On the spectrum analyzer, press **PEAK SEARCH**. On the Agilent 3335A adjust the output power level for a spectrum analyzer marker amplitude reading of –30 dBm ±0.17 dB.
5. On the spectrum analyzer, press **SGL SWP**. Wait for the completion of the sweep, then press **PEAK SEARCH**, **MKR→**, **MARKER → CF STEP**.
6. Press **MKR, MARKER DELTA, FREQUENCY, ⇑**, **SGL SWP**.
7. After the spectrum analyzer completes a new sweep, press **PEAK SEARCH**. Record the Δ MKR amplitude reading as the second harmonic distortion (<1.45 GHz).

   Second harmonic distortion (<1.45 GHz):_____ dBc

Second Harmonic Distortion, >1.45 GHz

8. Zero and calibrate the Agilent 8485A in LOG mode (readout in dBm). Enter the power sensor 3 GHz calibration factor into the Agilent 8902A.
9. Connect the equipment as shown in Figure 10-37, without the filters in place.
10. On the spectrum analyzer, set the controls as follows:

    Center frequency . . . . . 2.95 GHz

ManualsPlus.com

Center frequency step . . . . . 2.95 GHz

Reference level. . . . . 0 dBm

Span . . . . . 10 kHz

Resolution BW. . . . . 300 Hz

11. On the Agilent 8340A/B, set the controls as follows:

    CW frequency . . . . . 2.95 GHz

    Power level . . . . . –10 dBm

12. On the spectrum analyzer, press **TRIG, SWEEP CONT, MKR, MARKERS OFF, PEAK SEARCH**.

13. Press **AMPLITUDE**, **MORE 1 OF 3, MORE 2 OF 3, PRESEL AUTO PK**. Wait for the PEAKING message to disappear before continuing to the next step.

14. On the Agilent 8340A/B, adjust the power level for a spectrum analyzer MKR reading of –5 dBm.

15. On the Agilent 8902A, press **RATIO**. Enter the power sensor 6 GHz calibration factor into the Agilent 8902A.

16. Set the Agilent 8340A/B CW to 5.9 GHz.

17. On the spectrum analyzer, press **FREQUENCY**, ⇑, **PEAK SEARCH**.

18. Press **AMPLITUDE, MORE 1 OF 3, MORE 2 OF 3, PRESEL AUTO PK**. Wait for the PEAKING message to disappear before continuing to the next step.

19. On the Agilent 8340A/B, adjust the power level for a spectrum analyzer MKR reading of –5 dBm.

20. Record the Agilent 8902A reading here, as the frequency response error:

    Frequency response error: _____ dB

21. Connect the equipment as shown in Figure 10-37, with the filter in place.

22. On the Agilent 8340A/B, set the controls as follows:

    CW frequency . . . . . 2.95 GHz

    Power level . . . . . –5 dBm

23. On the spectrum analyzer, press **MKR, MARKERS OFF, FREQUENCY,** ⇓, **PEAK SEARCH**.

24. On the Agilent 8340A/B, adjust the power level for a spectrum analyzer marker amplitude reading of 0 dBm.

ManualsPlus.com

25. On the spectrum analyzer, press **SGL SWP, SGL SWP, PEAK SEARCH, MARKER DELTA**, **FREQUENCY,** ⇑.

26. Press **AMPLITUDE,** 30, –**dBm, SGL SWP** then wait for the completion of a new sweep.

27. Press **PEAK SEARCH**. Record the Δ MKR amplitude reading here:

Δ MKR amplitude reading: _____ dBc

28. Algebraically add the frequency response error recorded in step 20 to the Δ MKR amplitude reading in step 27. Record the result here, as the second harmonic distortion (>1.45 GHz).

Second harmonic
distortion (>1.45 GHz): _____ dBc

ManualsPlus.com

35. Second Harmonic Distortion: Agilent 8562E/EC, Agilent 8563E/EC, Agilent 8564E/EC, Agilent 8565E/EC

Instrument Under Test

Agilent 8562E/EC
Agilent 8563E/EC
Agilent 8564E/EC
Agilent 8565E/EC

Related Specification

Second Harmonic Distortion

Related Adjustment

There is no related adjustment procedure for this performance test.

Description

A synthesized sweeper and low-pass filter provide the signal for measuring second harmonic distortion. The low-pass filter eliminates any harmonic distortion originating at the signal source. The spectrum analyzer frequency response is calibrated out for the >1.45 GHz tests. The synthesized sweeper is phase-locked to the spectrum analyzer 10 MHz reference.

Figure 10-38 Second Harmonic Distortion Test Setup, <1.45 GHz

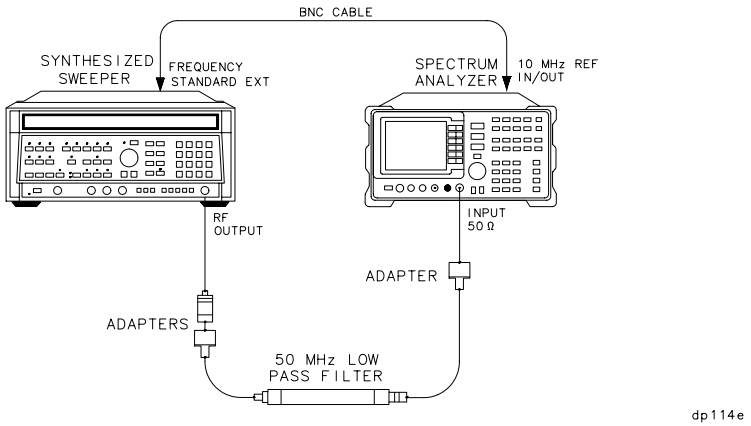

ManualsPlus.com

Figure 10-39 Second Harmonic Distortion Test Setup, >1.45 GHz

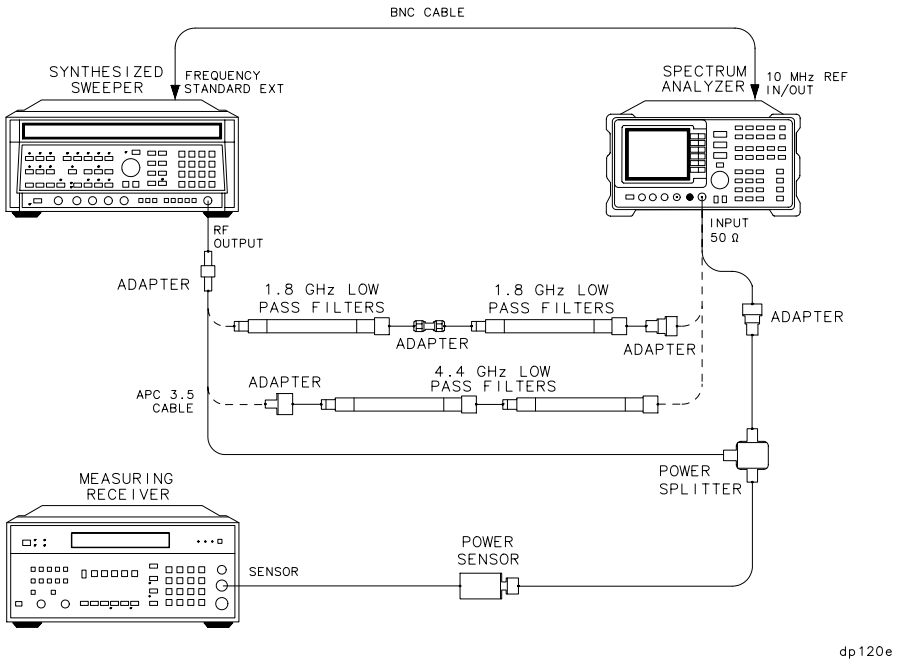

Equipment

Synthesized sweeper . . . . . Agilent 8340A/B

Measuring receiver . . . . . Agilent 8902A

Power sensor . . . . . Agilent 8485A

1.8 GHz low-pass filter *(2 required)* 0960-0159

50 MHz low-pass filter 0955-0306

4.4 GHz low-pass filter *(2 required)* . . . . . Agilent 11689A

Power splitter . . . . . Agilent 11667B

Adapters

Type N (m) to BNC (f) *(2 required)*. 1250-1476

Type N (m) to SMA (f). 1250-1250

Type N (f) to APC 3.5 (f) 1250-1745

Type N (m) to APC 3.5 (m) 1250-1743

APC 3.5 (f) to APC 3.5 (f) 5061-5311

SMA (m) to SMA (m). 1250-1159

ManualsPlus.com

Type N (f) to 2.4 mm (f) . . . . . Agilent 11903B

(*for Agilent 8564E/EC and Agilent 8565E/EC*)

APC 3.5 (m) to 2.4 mm (f) . . . . . Agilent 11901D

(*for Agilent 8564E/EC and Agilent 8565E/EC*)

Cables

BNC, 122 cm (48 in.) *(2 required)* . . . . . Agilent 10503A

APC 3.5, 91 cm (36 in.). 8120-4921

Procedure

Distortion, <1.45 GHz

1. Connect the equipment as shown in Figure 10-38, using the 50 MHz low-pass filter and BNC cable. The spectrum analyzer provides the frequency reference for the synthesized sweeper.
2. On the Agilent 8340A/B, set the controls as follows:

   CW frequency . . . . . 39 MHz

   Power level . . . . . –30 dBm

   Power step . . . . . .0.05 dB

   RF power . . . . . on

   Frequency standard switch (Rear Panel). . . . . EXT
3. On the spectrum analyzer, press **PRESET**. Set the controls as follows:

   Center frequency . . . . . 39 MHz

   Span . . . . . 1 kHz

   Reference level. . . . . –30 dBm
4. On the spectrum analyzer, press **PEAK SEARCH**. On the Agilent 8340A/B, adjust the power level for a spectrum analyzer marker amplitude reading of –30 dBm ±0.17 dB.
5. On the spectrum analyzer, press **SGL SWP** and wait for the sweep to complete. Press **PEAK SEARCH, MARKER →**, **MARKER → CF STEP** then **MKR**, **MARKER DELTA**, **FREQUENCY**, ⇑.
6. Press **SGL SWP**.

ManualsPlus.com

7. After the spectrum analyzer completes a new sweep, press **PEAK SEARCH**. Record the Δ MKR reading here:

Second harmonic distortion (<1.45 GHz):_____ dBc

Frequency Response Characterization, 1.5 GHz

8. Zero and calibrate the Agilent 8902A/Agilent 8485A combination in LOG mode (readout in dBm). Enter the power sensor 1.5 GHz calibration factor into the Agilent 8902A.
9. Connect the equipment as shown in Figure 10-39, without the filters in place.
10. On the spectrum analyzer, set the controls as follows:

    Center frequency . . . . . .1.5 GHz

    Center frequency step . . . . . .1.5 GHz

    Reference level . . . . . 0 dBm

    Span . . . . . 10 kHz

    Resolution BW . . . . . 1 kHz

11. On the Agilent 8340A/B, set the controls as follows:

    CW frequency . . . . . .1.5 GHz

    Power level . . . . . .–10 dBm

12. On the spectrum analyzer, press **TRIG, SWEEP CONT, MKR, MARKERS OFF, PEAK SEARCH**.
13. On the Agilent 8340A/B, adjust the power level for a spectrum analyzer MKR reading of –5 dBm.
14. On the Agilent 8902, press **RATIO**. Enter the power sensor 3 GHz calibration factor into the Agilent 8902A.
15. Set the Agilent 8340A/B CW to 3 GHz.
16. On the spectrum analyzer, press **FREQUENCY, ⇑, PEAK SEARCH**.
17. Press **AUX CTRL, INTERNAL MIXER, PRESEL AUTO PK**. Wait for the `PEAKING!` message to disappear before continuing to the next step.
18. On the Agilent 8340A/B, adjust the power level for a spectrum analyzer MKR reading of –5 dBm.
19. Record the Agilent 8902A reading here, as the frequency response error (1.5 GHz):

Frequency response error (1.5 GHz): _____ dB

ManualsPlus.com

Frequency Response Characterization, 2.95 GHz

20. Press **RATIO** on the Agilent 8902A.
21. On the spectrum analyzer, set the controls as follows:

    Center frequency . . . . . 2.95 GHz

    Center frequency step . . . . . 2.95 GHz

22. On the Agilent 8340A/B, set the controls as follows:

    CW frequency . . . . . 2.95 GHz

    Power level . . . . . –10 dBm

23. On the spectrum analyzer, press **PEAK SEARCH**.
24. Press **AUX CTRL**, **INTERNAL MIXER**, **PRESEL AUTO PK**. Wait for the `PEAKING!` message to disappear before continuing to the next step.
25. On the Agilent 8340A/B, adjust the power level for a spectrum analyzer MKR reading of –5 dBm.
26. On the Agilent 8902, press **RATIO**. Enter the power sensor 6 GHz calibration factor into the Agilent 8902A.
27. Set the Agilent 8340A/B CW to 5.9 GHz.
28. On the spectrum analyzer, press **FREQUENCY**, ⇑, **PEAK SEARCH**.
29. Press **AUX CTRL, INTERNAL MIXER, PRESEL AUTO PK**. Wait for the `PEAKING!` message to disappear before continuing to the next step.
30. On the Agilent 8340A/B, adjust the power level for a spectrum analyzer MKR reading of –5 dBm.
31. Record the Agilent 8902A reading here, as the frequency response error (2.95 GHz):

    Frequency response error (2.95 GHz): _____ dB

Distortion, 1.45 GHz to 2.0 GHz

32. Connect the equipment as shown in Figure 10-39, with the 1.8 GHz filters in place.
33. On the Agilent 8340A/B, set the controls as follows:

    CW frequency . . . . . 1.5 GHz

    Power level . . . . . –5 dBm

ManualsPlus.com

34. Set the spectrum analyzer as follows:

    Center frequency . . . . . .1.5 GHz

    Center frequency step . . . . . .1.5 GHz

    Span . . . . . 1 kHz

    Resolution BW . . . . . AUTO

    Markers. . . . . off

35. Press **PEAK SEARCH** on the spectrum analyzer.

36. On the Agilent 8340A/B, adjust the power level for a spectrum analyzer marker amplitude reading of 0 dBm.

37. On the spectrum analyzer, press **SGL SWP, PEAK SEARCH, MARKER DELTA, FREQUENCY,** ⇑.

38. Press **AMPLITUDE** 30 –**dBm SGL SWP**.

39. Wait for completion of a new sweep, then press **PEAK SEARCH**. Record the Δ MKR amplitude reading here:

    Δ MKR amplitude reading: _____ dBc

40. Algebraically add the frequency response error (1.5 GHz) recorded in step 19 to the Δ MKR amplitude reading in step 39. Record the result here, as the second harmonic distortion (1.5 GHz).

    Second harmonic distortion (1.5 GHz): _____ dBc

41. On the spectrum analyzer, press **TRIG**, **SWEEP CONT, AMPLITUDE**, 0, **dBm**.

Distortion, >2.0 GHz

42. Connect the equipment as shown in Figure 10-39, with the 4.4 GHz filters in place.

43. On the Agilent 8340A/B, set the controls as follows:

    CW frequency . . . . . .2.95 GHz

    Power level . . . . . –5 dBm

44. On the spectrum analyzer, press **MKR**, **MARKERS OFF, FREQUENCY,** 2.95, **GHz**, **CF STEP,** 2.95, **GHz**, **PEAK SEARCH**.

45. On the Agilent 8340A/B, adjust the power level for a spectrum analyzer marker amplitude reading of 0 dBm.

46. On the spectrum analyzer, press **SGL SWP**, **PEAK SEARCH**, **MARKER DELTA, FREQUENCY,** ⇑.

ManualsPlus.com

47. Press **AMPLITUDE,** 30, –**dBm, SGL SWP**.

48. Wait for completion of a new sweep, then press **PEAK SEARCH**. Record the Δ MKR amplitude reading here:

Δ MKR amplitude reading:_____ dBc

49. Algebraically add the frequency response error recorded in step 31 to the Δ MKR amplitude reading in step 49. Record the result here, as the second harmonic distortion (>2.0 GHz).

Second harmonic distortion (>2.0 GHz): _____ dBc

ManualsPlus.com

36. Frequency Response: 8560E/EC

Instrument Under Test

8560E/EC

Related Specification

Relative Frequency Response
Absolute Frequency Response

Related Adjustment

Frequency Response Adjustment
LO Distribution Amplifier Adjustment

Description

The output of the synthesized sweeper is fed through a power splitter to a power sensor, then to the spectrum analyzer. The synthesized sweeper power level is adjusted at 300 MHz to place the displayed signal at the spectrum analyzer center horizontal graticule line. The measuring receiver, used as a power meter, is placed in ratio mode. At each new synthesized sweeper frequency and spectrum analyzer center frequency, the sweeper power level is adjusted to place the signal at the center horizontal graticule line. The measuring receiver displays the inverse of the frequency response relative to the calibrator.

Figure 10-40 Frequency Response Test Setup, 50 MHz to 2.9 GHz

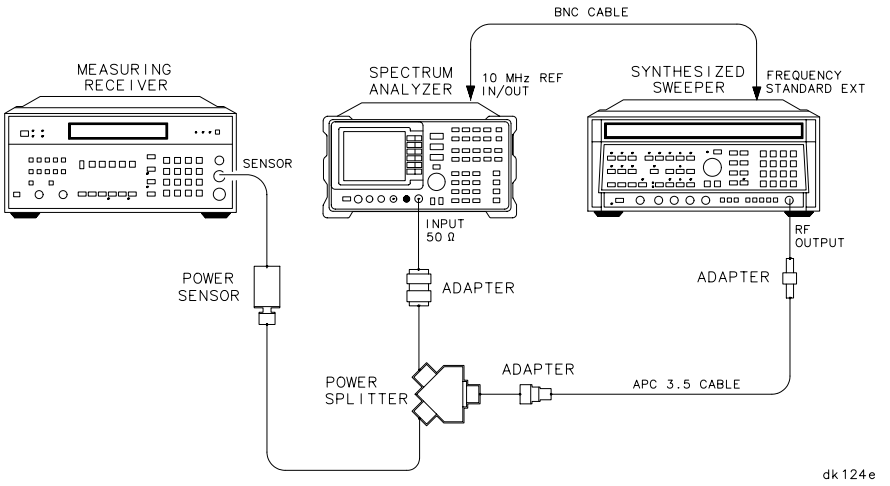

ManualsPlus.com

Figure 10-41 Frequency Response Test Setup, <50 MHz

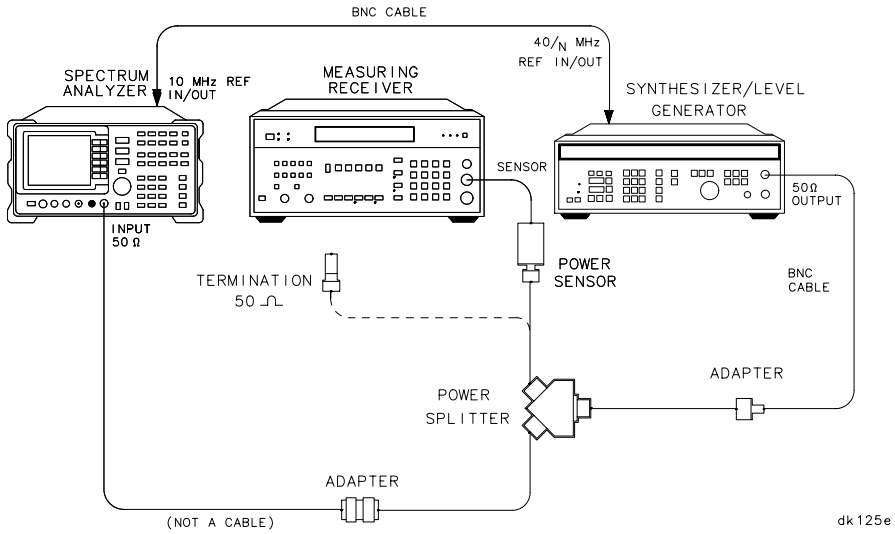

Equipment

Measuring receiver . . . . . Agilent 8902A

Synthesized sweeper . . . . . .Agilent 8340A/B

Synthesizer/level generator . . . . . Agilent 3335A

Power sensor. . . . . Agilent 8482A

Power splitter . . . . . Agilent 11667A

Coaxial 50 Ω termination . . . . . Agilent 908A

Adapters

APC 3.5 (f) to APC 3.5 (f) 5061-5311

Type N (m) to type N (m) 1250-1475

Type N (m) to BNC (f) 1250-1476

Type N (m) to APC 3.5 (f). 1250-1744

Cables

BNC, 122 cm (48 in) *(2 required)*. . . . . Agilent 10503A

APC 3.5, 91 cm (36 in) 8120-4921

ManualsPlus.com

Procedure

1. Zero and calibrate the Agilent 8902A and the Agilent 8482A in log mode, as described in the Agilent 8902A Operation Manual. Enter the power sensor 300 MHz calibration factor into the Agilent 8902A.
2. Connect the equipment as shown in Figure 10-40.
3. On the Agilent 8340A/B, press **INSTR PRESET**. Set the controls as follows:

   CW frequency . . . . . 300 MHz

   Frequency step . . . . . 100 MHz

   Power level . . . . . –4 dBm

   Frequency standard switch (rear panel) . . . . . EXT
4. On the spectrum analyzer, press **PRESET**. Set the controls as follows:

   Center frequency . . . . . 300 MHz

   Center frequency step . . . . . 100 MHz

   Span . . . . . 0 Hz

   Reference level . . . . . –5 dBm

   dB/division . . . . . 1 dB

   Resolution BW . . . . . 300 kHz
5. On the spectrum analyzer, press **MKR**.
6. On the Agilent 8340A/B, adjust the power level for a MKR amplitude of –10 dBm ±0.05 dB.
7. Press **RATIO** on the Agilent 8902A.

DC Coupled Frequency Response (≥50 MHz)

8. On the spectrum analyzer, press **AMPLITUDE, MORE 1 OF 3**, **COUPLING DC**.
9. Set the Agilent 8340A/B CW to 50 MHz.
10. On the spectrum analyzer, press **FREQUENCY**, **CENTER FREQ**, 50, **MHz**.
11. On the Agilent 8340A/B, adjust the power level for a spectrum analyzer MKR amplitude reading of –10 dBm ±0.05 dB.

ManualsPlus.com

12. Record the negative of the power ratio displayed on the Agilent 8902A in Table 10-50, column 2. Record the power ratio here exactly as it is displayed on the Agilent 8902A:

Agilent 8902A reading at 50 MHz: _____ dB

13. Set the Agilent 8340A/B CW to 100 MHz.

14. On the spectrum analyzer, press **FREQUENCY, CENTER FREQ**, 100, **MHz**.

15. On the Agilent 8340A/B, adjust the power level for a spectrum analyzer MKR amplitude reading of –10 dBm ±0.05 dB.

16. Record the negative of the power ratio displayed on the Agilent 8902A, in Table 10-50, column 2.

17. On the Agilent 8340A/B, press **CW** ⇑.

18. On the spectrum analyzer, press **FREQUENCY**, ⇑, to step through the remaining frequencies listed in Table 10-50. At each new frequency, repeat steps 15 through 17, entering the power sensor calibration factors into the Agilent 8902A as indicated in Table 10-50.

AC Coupled Frequency Response (≥50 MHz)

19. On the spectrum analyzer, press **AMPLITUDE, MORE 1 OF 3**, **COUPLING AC**.

20. Set the Agilent 8340A/B CW to 50 MHz.

21. On the spectrum analyzer, press **FREQUENCY, CENTER FREQ**, 50, **MHz**.

22. On the Agilent 8340A/B, adjust the power level for a spectrum analyzer MKR amplitude reading of –10 dBm ±0.05 dB.

23. Record the negative of the power ratio displayed on the Agilent 8902A, in Table 10-51, column 2. Record the power ratio here exactly as it is displayed on the Agilent 8902A:

Agilent 8902A reading at 50 MHz: _____ dB

24. Set the Agilent 8340A/B CW to 100 MHz.

25. On the spectrum analyzer, press **FREQUENCY**, **CENTER FREQ**, 100, **MHz**.

26. On the Agilent 8340A/B, adjust the power level for a spectrum analyzer MKR amplitude reading of –10 dBm ±0.05 dB.

27. Record the negative of the power ratio displayed on the Agilent 8902A, in Table 10-51, column 2.

ManualsPlus.com

28. On the Agilent 8340A/B, press **CW,** ⇑

29. On the spectrum analyzer, press **FREQUENCY**, ⇑ to step through the remaining frequencies listed in Table 10-51. At each new frequency, repeat steps 26 through 28, entering the power sensor calibration factors into the Agilent 8902A as indicated in Table 10-51.

DC Coupled Frequency Response (<50 MHz)

30. Connect the equipment as shown in Figure 10-40 with the power sensor connected to the power splitter.

31. On the spectrum analyzer, press **AMPLITUDE MORE 1 OF 3 COUPLING DC**. Set the controls as follows:

    Center frequency . . . . . 50 MHz

    Span . . . . . 100 Hz

    Resolution BW . . . . . 10 Hz

    Marker . . . . . off

    Video BW . . . . . 1 Hz

32. On the Agilent 3335A, set the controls as follows:

    Frequency . . . . . 50 MHz

    Amplitude . . . . . –4 dBm

    Output. . . . . 50 Ω

    Amplitude increment . . . . . 0.01 dB

33. Enter the power sensor 50 MHz calibration factor into the Agilent 8902A.

34. Adjust the Agilent 3335A amplitude until the Agilent 8902A display reads the same value as recorded in step 12. Record the Agilent 3335A amplitude here, and in Table 10-52:

    Agilent 3335A amplitude (50 MHz):_____ dBm

35. Replace the Agilent 8482A power sensor with the Agilent 908A 50 Ω termination.

36. On the spectrum analyzer, press **PEAK SEARCH, MARKER DELTA**.

37. Set the spectrum analyzer CENTER FREQ and the Agilent 3335A frequency to the frequencies listed in Table 10-52. At each frequency press **PEAK SEARCH** on the spectrum analyzer and adjust the Agilent 3335A amplitude for a Δ MKR amplitude reading of 0.00 ±0.05 dB. Record the Agilent 3335A amplitude setting in Table 10-52, column 2, as the Agilent 3335A amplitude.

ManualsPlus.com

38. For each of the frequencies listed in Table 10-52, subtract the Agilent 3335A amplitude reading (column 2) from the Agilent 3335A amplitude (50 MHz) recorded in step 36. Record the results as the response relative to 50 MHz in Table 10-52, column 3.

39. Add to each of the response relative to 50 MHz entries in Table 10-52 the Agilent 8902A reading for 50 MHz listed in Table 10-50. Use the value from Table 10-52 for the ac coupled frequency. Record the results as the response relative to 300 MHz, in Table 10-52, column 4.

AC Coupled Frequency Response (<50 MHz)

40. Connect the equipment as shown in Figure 10-40 with the power sensor connected to the power splitter.

41. On the spectrum analyzer, press **AMPLITUDE, MORE 1 OF 3, COUPLING AC**.

42. Set the controls as follows:

Center frequency . . . . . 50 MHz

Span . . . . . 100 Hz

Resolution BW . . . . . 10 Hz

Marker . . . . . off

Video BW . . . . . 1 Hz

43. On the Agilent 3335A, set the controls as follows:

Frequency . . . . . 50 MHz

Amplitude . . . . . –4 dBm

Output . . . . . 50 Ω

44. Enter the power sensor 50 MHz calibration factor into the Agilent 8902A.

45. Adjust the Agilent 3335A AMPTD until the Agilent 8902A display reads the same value as recorded in step 23. Record the Agilent 3335A amplitude here and in Table 10-53:

Agilent 3335A amplitude (50 MHz):_____ dB

46. Replace the Agilent 8482A power sensor with the Agilent 908A 50 Ω termination.

47. On the spectrum analyzer, press **PEAK SEARCH**, **MARKER DELTA**.

48. Set the spectrum analyzer center frequency and the Agilent 3335A frequency to the frequencies listed in Table 10-53. At each frequency,

ManualsPlus.com

press **PEAK SEARCH** on the spectrum analyzer, and adjust the Agilent 3335A amplitude for a Δ MKR amplitude reading of 0.00 ±0.05 dB. Record the Agilent 3335A amplitude setting in Table 10-53, column 2, as the Agilent 3335A amplitude.

49. For each of the frequencies listed in Table 10-53, subtract the Agilent 3335A amplitude reading (column 2) from the Agilent 3335A amplitude (50 MHz) recorded in step 46. Record the results as the response relative to 50 MHz in Table 10-53, column 3.

50. Add to each of the response relative to 50 MHz entries in Table 10-53 the Agilent 8902A reading for 50 MHz listed in Table 10-50. Record the results as the response relative to 300 MHz, in Table 10-53, column 4.

51. Press **PRESET** on the spectrum analyzer.

Test Results

52. Record dc coupled frequency response results below:

a. Enter the most positive number from Table 10-52, column 4. _____ dB

b. Enter the most positive number from Table 10-50, column 2. _____ dB

c. Of (a) and (b), enter whichever number is *more* positive. _____ dB

d. Enter the most negative number from Table 10-52, column 4. _____ dB

e. Enter the most negative number from Table 10-50, column 2. _____ dB

f. Of (d) and (e), enter whichever number is *more* negative. _____ dB

g. Subtract (f) from (c). _____ dB

53. Record ac coupled frequency response results below:

a. Enter the most positive number from Table 10-53, column 4. _____ dB

b. Enter the most positive number from Table 10-51, column 2. _____ dB

c. Of (a) and (b), enter whichever number is *more* positive. _____ dB

d. Enter the most negative number from Table 10-53, column 4. _____ dB

ManualsPlus.com

e. Enter the most negative number from Table 10-51, column 2. _____ dB

f. Of (d) and (e), enter whichever number is *more* negative. _____ dB

g. Subtract (f) from (c). _____ dB

54. This step applies only to spectrum analyzers with serial number prefixes 3632A and later. Record the dc coupled frequency response results over the 100 MHz to 2.9 GHz range:

a. Enter the most positive number from Table 10-50, column 2, for center frequencies between 100 MHz and 2.9 GHz. _____ dB

b. Enter the most negative number from Table 10-50, column 2, for center frequencies between 100 MHz and 2.9 GHz. _____ dB

c. Subtract (b) from (a). _____ dB

ManualsPlus.com

Table 10-50 DC Coupled Frequency Response (≥50 MHz)

Column 1 Frequency (MHz)	Column 2 Agilent 8902A Reading (dB)	Column 3 Cal Factor Frequency (GHz)	Column 4 Measurement Uncertainty (dB)
50		0.050	+0.32/–0.34
100		0.050	+0.32/–0.34
200		0.30	+0.32/–0.34
300		0.30	+0.32/–0.34
400		0.30	+0.32/–0.34
500		0.30	+0.32/–0.34
600		0.30	+0.32/–0.34
700		1.0	+0.32/–0.34
800		1.0	+0.32/–0.34
900		1.0	+0.32/–0.34
1000		1.0	+0.32/–0.34
1100		1.0	+0.32/–0.34
1200		1.0	+0.32/–0.34
1300		1.0	+0.32/–0.34
1400		1.0	+0.32/–0.34
1500		2.0	+0.32/–0.34
1600		2.0	+0.32/–0.34
1700		2.0	+0.32/–0.34
1800		2.0	+0.32/–0.34
1900		2.0	+0.32/–0.34
2000		2.0	+0.32/–0.34
2100		2.0	+0.32/–0.34
2200		2.0	+0.32/–0.34
2300		2.0	+0.32/–0.34
2400		2.0	+0.32/–0.34
2500		3.0	+0.32/–0.34
2600		3.0	+0.32/–0.34
2700		3.0	+0.32/–0.34
2800		3.0	+0.32/–0.34
2900		3.0	+0.32/–0.34

ManualsPlus.com

Table 10-51 AC Coupled Frequency Response (≥50 MHz)

Column 1 Frequency (MHz)	Column 2 Agilent 8902A Reading (dB)	Column 3 Cal Factor Frequency (GHz)	Column 4 Measurement Uncertainty (dB)
50		0.050	+0.32/–0.34
100		0.050	+0.32/–0.34
200		0.30	+0.32/–0.34
300		0.30	+0.32/–0.34
400		0.30	+0.32/–0.34
500		0.30	+0.32/–0.34
600		0.30	+0.32/–0.34
700		1.0	+0.32/–0.34
800		1.0	+0.32/–0.34
900		1.0	+0.32/–0.34
1000		1.0	+0.32/–0.34
1100		1.0	+0.32/–0.34
1200		1.0	+0.32/–0.34
1300		1.0	+0.32/–0.34
1400		1.0	+0.32/–0.34
1500		2.0	+0.32/–0.34
1600		2.0	+0.32/–0.34
1700		2.0	+0.32/–0.34
1800		2.0	+0.32/–0.34
1900		2.0	+0.32/–0.34
2000		2.0	+0.32/–0.34
2100		2.0	+0.32/–0.34
2200		2.0	+0.32/–0.34
2300		2.0	+0.32/–0.34
2400		2.0	+0.32/–0.34
2500		3.0	+0.32/–0.34
2600		3.0	+0.32/–0.34
2700		3.0	+0.32/–0.34
2800		3.0	+0.32/–0.34
2900		3.0	+0.32/–0.34

ManualsPlus.com

Table 10-52 DC Coupled Frequency Response (<50 MHz)

Column 1 Frequency	Column 2 Agilent 3335A AMPLITUDE (dBm)	Column 3 Response Relative to 50 MHz	Column 4 Response Relative to 300 MHz	Column 5 Measurement Uncertainty (dB)
50 MHz		0 (Ref)		+0.27/–0.28
20 MHz				+0.27/–0.28
10 MHz				+0.27/–0.28
1 MHz				+0.27/–0.28
100 kHz				+0.27/–0.28
10 kHz				+0.27/–0.28
1 kHz				+0.27/–0.28
500 Hz				+0.27/–0.28
200 Hz				+0.27/–0.28

Table 10-53 AC Coupled Frequency Response (<50 MHz)

Column 1 Frequency	Column 2 Agilent 3335A AMPLITUDE (dBm)	Column 3 Response Relative to 50 MHz	Column 4 Response Relative to 300 MHz	Column 5 Measurement Uncertainty (dB)
50 MHz		0 (Ref)		+0.27/–0.28
20 MHz				+0.27/–0.28
10 MHz				+0.27/–0.28
5 MHz				+0.27/–0.28
1 MHz				+0.27/–0.28
500 kHz				+0.27/–0.28
100 kHz				+0.27/–0.28

ManualsPlus.com

37. Frequency Response: Agilent 8561E/EC

Instrument Under Test

Agilent 8561E/EC

Related Specification

Relative Frequency Response
Absolute Frequency Response
Band Switching Uncertainty

Related Adjustment

Frequency Response Adjustment
LO Distribution Amplifier Adjustment

Description

The output of a synthesized sweeper is fed through a power splitter to a power sensor, then to the spectrum analyzer. The synthesized sweeper power level is adjusted at 300 MHz to place the displayed signal at the spectrum analyzer center horizontal graticule line. The measuring receiver, used as a power meter, is placed in ratio mode. At each new synthesized sweeper frequency and spectrum analyzer center frequency, the sweeper power level is adjusted to place the signal at the center horizontal graticule line. The measuring receiver displays the inverse of the frequency response relative to the calibrator.

Figure 10-42 Frequency Response Test Setup, 50 MHz to 6.5 GHz

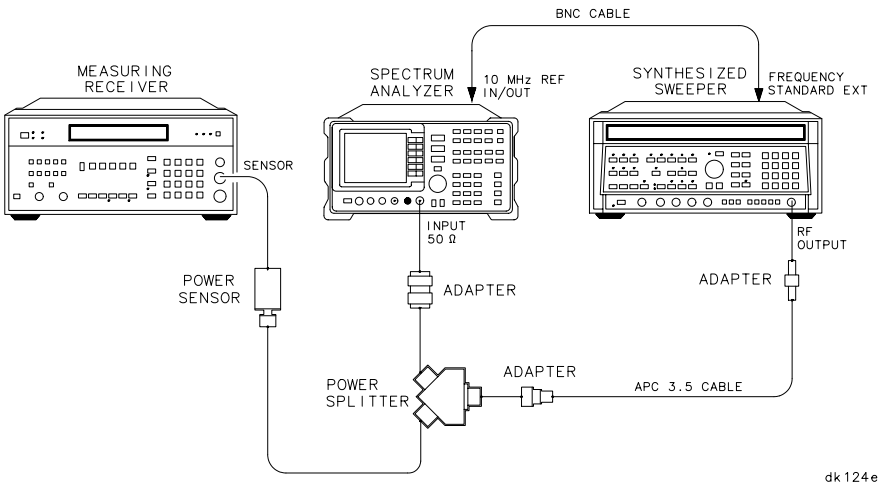

ManualsPlus.com

Figure 10-43 Frequency Response Test Setup, <50 MHz

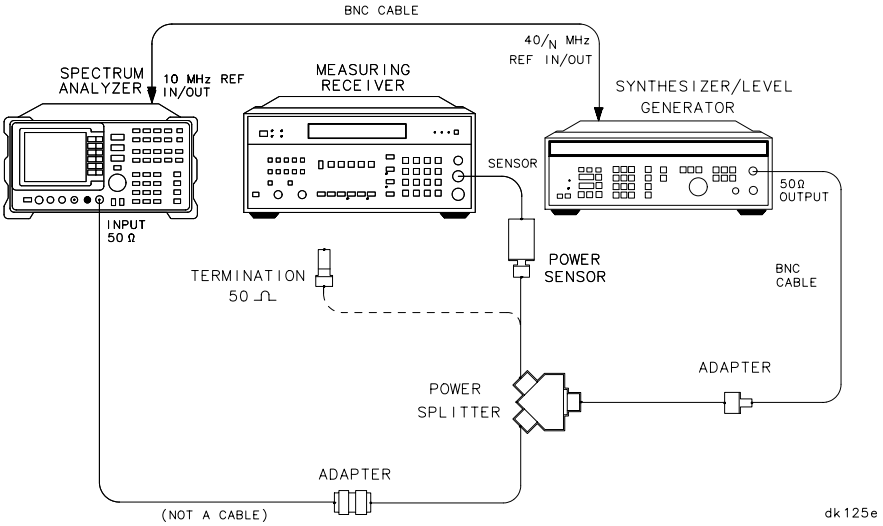

Equipment

Measuring receiver . . . . . Agilent 8902A

Synthesized sweeper . . . . . Agilent 8340A/B

Synthesizer/level generator . . . . . Agilent 3335A

Power sensor . . . . . Agilent 8481A

Power splitter . . . . . Agilent 11667A

Coaxial 50 Ω termination . . . . . Agilent 908A

Adapters

APC 3.5 (f) to APC 3.5 (f) 5061-5311

Type N (m) to type N (m) 1250-1475

Type N (m) to BNC (f) 1250-1476

Type N (f) to APC 3.5 (f) 1250-1744

Cables

BNC, 122 cm (48 in.) *(2 required)*. . . . . Agilent 10503A

APC 3.5, 91 cm (36 in.) 8120-4921

ManualsPlus.com

Procedure

1. Zero and calibrate the Agilent 8902A and the Agilent 8481A in log mode, as described in the Agilent 8902A Operation Manual. Enter the power sensor 300 MHz calibration factor into the Agilent 8902A.
2. Connect the equipment as shown in Figure 10-42.
3. On the Agilent 8340A/B, press **INSTR PRESET**. Set the controls as follows:

   CW frequency . . . . . 300 MHz

   Frequency step . . . . . 100 MHz

   Power level . . . . . –4 dBm

   Frequency standard switch (rear panel) . . . . . EXT

4. On the spectrum analyzer, press **PRESET**. Set the controls as follows:

   Center frequency . . . . . 300 MHz

   Center frequency step . . . . . 100 MHz

   Span . . . . . 0 Hz

   Reference level. . . . . –5 dBm

   dB/division . . . . . 1 dB

   Resolution BW . . . . . 300 kHz

5. On the spectrum analyzer, press **MKR**.
6. On the Agilent 8340A/B, adjust the power level for a MKR amplitude of –10 dBm ±0.05 dB.
7. Press **RATIO** on the Agilent 8902A.

DC Coupled Frequency Response, Band 0 (≥50 MHz)

8. On the spectrum analyzer, press **AMPLITUDE, MORE 1 OF 3, COUPLING DC**.
9. Set the Agilent 8340A/B CW to 50 MHz.
10. On the spectrum analyzer, press **FREQUENCY**, **CENTER FREQ**, 50, **MHz**.
11. On the Agilent 8340A/B, adjust the power level for a spectrum analyzer MKR amplitude reading of –10 dBm ±0.05 dB.
12. Record the negative of the power ratio displayed on the

ManualsPlus.com

Agilent 8902A in Table 10-54, column 2. Record the power ratio here:

Agilent 8902A reading at 50 MHz (dc coupled): _____ dB

13. Set the Agilent 8340A/B CW to 150 MHz.
14. On the spectrum analyzer, press **FREQUENCY, CENTER FREQ**, 150, **MHz**.
15. On the Agilent 8340A/B, adjust the power level for a spectrum analyzer MKR amplitude reading of –10 dBm ±0.05 dB.
16. Record the negative of the power ratio displayed on the Agilent 8902A, in Table 10-54, column 2.
17. On the Agilent 8340A/B, press **CW,** ⇑.
18. On the spectrum analyzer, press **FREQUENCY** ⇓ to step through the remaining frequencies listed in Table 10-54. At each new frequency, repeat steps 15 through 17, entering the power sensor calibration factors into the Agilent 8902A as indicated in Table 10-54.

NOTE It will be necessary to enter the last synthesizer sweeper and spectrum analyzer frequency, 2.9 GHz, manually; the step functions will set the frequency to 2.95 GHz.

DC Coupled Frequency Response, Band 1

19. On the spectrum analyzer, press **FREQUENCY,** 2.95, **GHz**.
20. Set the Agilent 8340A/B CW to 2.95 GHz.
21. On the spectrum analyzer, press **AUX CTRL, INTERNAL MIXER**, **PRESEL AUTO PK**. Wait for the `PEAKING` message to disappear.
22. On the Agilent 8340A/B adjust the power level for a spectrum analyzer MKR amplitude reading of –10 dBm ±0.05 dB.
23. Record the negative of the power ratio displayed on the Agilent 8902A in Table 10-55, column 2.
24. Press **CW**, ⇑ on the Agilent 8340A/B.
25. On the spectrum analyzer, press **FREQUENCY,** ⇑ to step through the remaining frequencies listed in Table 10-55. At each new frequency, repeat steps 21 through 24, entering the power sensor calibration factors into the Agilent 8902A as indicated in Table 10-55.

NOTE It will be necessary to enter the last synthesizer sweeper and spectrum analyzer frequency, 6.5 GHz, manually; the step functions will set the frequency to 6.55 GHz.

ManualsPlus.com

AC Coupled Frequency Response, Band 0 (≥50 MHz)

26. Enter the power sensor 50 MHz calibration factor into the Agilent 8902A.
27. On the spectrum analyzer, press **AMPLITUDE, MORE 1 OF 3**, **COUPLING AC**.
28. Set the Agilent 8340A/B CW to 50 MHz.
29. On the spectrum analyzer, press **FREQUENCY, CENTER FREQ**, 50, **MHz**.
30. On the Agilent 8340A/B, adjust the power level for a spectrum analyzer MKR amplitude reading of –10 dBm ±0.05 dB.
31. Record the negative of the power ratio displayed on the Agilent 8902A, in Table 10-56, column 2. Record the power ratio below:

    Agilent 8902A reading at 50 MHz (ac coupled): _____ dB

32. Set the Agilent 8340A/B CW to 150 MHz.
33. On the spectrum analyzer, press **FREQUENCY, CENTER FREQ**, 150, **MHz**.
34. On the Agilent 8340A/B, adjust the power level for a spectrum analyzer MKR amplitude reading of –10 dBm ±0.05 dB.
35. Record the negative of the power ratio displayed on the Agilent 8902A, in Table 10-56, column 2.
36. On the Agilent 8340A/B, press **CW**, ⇑.
37. On the spectrum analyzer, press **FREQUENCY**, ⇑ to step through the remaining frequencies listed in Table 10-56. At each new frequency, repeat steps 34 through 36, entering the power sensor calibration factors into the Agilent 8902A as indicated in Table 10-56.

NOTE It is necessary to enter the last synthesized sweeper and spectrum analyzer frequency, (2.9 GHz) manually. The step functions will set the frequency to 2.95 GHz.

AC Coupled Frequency Response, Band 1

38. On the spectrum analyzer, press **FREQUENCY,** 2.95, **GHz**.
39. Set the Agilent 8340A/B CW to 2.95 GHz.
40. On the spectrum analyzer, press **AUX CTRL**, **INTERNAL MIXER**, **PRESEL AUTO PK**. Wait for the PEAKING message to disappear.

ManualsPlus.com

41. On the Agilent 8340A/B adjust the power level for a spectrum analyzer MKR amplitude reading of –10 dBm ±0.05 dB.

42. Record the negative of the power ratio displayed on the Agilent 8902A in Table 10-57, column 2.

43. Press **CW** ⇑ on the Agilent 8340A/B.

44. On the spectrum analyzer, press **FREQUENCY,** ⇑ to step through the remaining frequencies listed in Table 10-57. At each new frequency, repeat steps 40 through 43, entering the power sensor calibration factors into the Agilent 8902A as indicated in Table 10-57.

NOTE It will be necessary to enter the last synthesizer sweeper and spectrum analyzer frequency, 6.5 GHz, manually; the step functions will set the frequency to 6.55 GHz.

DC Coupled Frequency Response (<50 MHz)

45. Connect the equipment as shown in Figure 10-43 with the power sensor still connected to the power splitter.

46. On the spectrum analyzer, press **AMPLITUDE, MORE 1 OF 3**, **COUPLING DC**. Set the controls as follows:

Center frequency . . . . . 50 MHz

Span . . . . . 100 Hz

Resolution BW . . . . . 10 Hz

Marker . . . . . off

Video BW . . . . . 1 Hz

47. On the Agilent 3335A, set the controls as follows:

Frequency . . . . . 50 MHz

Amplitude . . . . . –4 dBm

Amplitude increment . . . . . 0.01 dB

48. Enter the power sensor 50 MHz calibration factor into the Agilent 8902A.

49. Adjust the Agilent 3335A amplitude until the Agilent 8902A display reads the same value as recorded in step 12. Record the Agilent 3335A amplitude here, and in Table 10-58:

Agilent 3335A amplitude (50 MHz):_____ dBm

50. Replace the Agilent 8481A power sensor with the Agilent 908A 50 Ω termination and adapter.

ManualsPlus.com

51. On the spectrum analyzer, press **PEAK SEARCH, MARKER DELTA**.

52. Set the spectrum analyzer center frequency and the Agilent 3335A frequency to the frequencies listed in Table 10-58. At each frequency press **PEAK SEARCH** on the spectrum analyzer and adjust the Agilent 3335A amplitude for a Δ MKR amplitude reading of 0.00 ±0.05 dB. Record the Agilent 3335A amplitude setting in Table 10-58, column 2, as the Agilent 3335A amplitude.

53. For each of the frequencies listed in Table 10-58, subtract the Agilent 3335A amplitude reading (column 2) from the Agilent 3335A amplitude (50 MHz) recorded in step 49. Record the results as the response relative to 50 MHz in Table 10-58, column 3.

54. Add to each of the response relative to 50 MHz entries in Table 10-58 the Agilent 8902A reading for 50 MHz listed in Table 10-54. Use the value from Table 10-58 for the ac coupled frequency. Record the results as the response relative to 300 MHz, in Table 10-58, column 4.

AC Coupled Frequency Response (<50 MHz)

55. On the spectrum analyzer, press **AMPLITUDE, MORE 1 OF 3**, **COUPLING AC**.

56. Set the controls as follows:

Center frequency . . . . . 50 MHz

Span . . . . . 100 Hz

Resolution BW . . . . . 10 Hz

Marker . . . . . off

Video BW . . . . . 1 Hz

57. On the Agilent 3335A, set the controls as follows:

Frequency . . . . . 50 MHz

Amplitude . . . . . –4 dBm

Amplitude increment . . . . . 0.01 dB

58. Enter the power sensor 50 MHz calibration factor into the Agilent 8902A. Replace the 50 Ω termination with the power sensor.

59. Adjust the Agilent 3335A amplitude until the Agilent 8902A display reads the same value as recorded in step 31. Record the Agilent 3335A amplitude here and in Table 10-59:

Agilent 3335A amplitude (50 MHz):_____ dB

ManualsPlus.com

60. Replace the Agilent 8481A power sensor with the Agilent 908A 50 Ω termination and adapter.

61. On the spectrum analyzer, press **PEAK SEARCH, MARKER DELTA**.

62. Set the spectrum analyzer center frequency and the Agilent 3335A frequency to the values listed in Table 10-59. At each frequency, press **PEAK SEARCH** on the spectrum analyzer, and adjust the Agilent 3335A amplitude for a Δ MKR amplitude reading of 0.00 ±0.05 dB. Record the Agilent 3335A amplitude setting in Table 10-59, column 2, as the Agilent 3335A Amplitude.

63. For each of the frequencies listed in Table 10-59, subtract the Agilent 3335A Amplitude Reading (column 2) from the Agilent 3335A Amplitude (50 MHz) recorded in step 59. Record the results as the response relative to 50 MHz in Table 10-59, column 3.

64. Add to each of the response relative to 50 MHz entries in Table 10-59 the Agilent 8902A reading for 50 MHz listed in Table 10-56. Record the results as the response relative to 300 MHz, in Table 10-59, column 4.

65. Press **PRESET** on the spectrum analyzer.

Test Results

66. Enter the results of the dc coupled frequency response, Band 0, below:

a. Enter the most positive number from Table 10-58, column 4.	_____	dB
b. Enter the most positive number from Table 10-54, column 2.	_____	dB
c. Of (a) and (b), enter whichever number is *more* positive.	_____	dB
d. Enter the most negative number from Table 10-58, column 4.	_____	dB
e. Enter the most negative number from Table 10-54, column 2.	_____	dB
f. Of (c) and (d), enter whichever number is *more* negative.	_____	dB
g. Subtract (f) from (c).	_____	dB

67. Enter the results of the dc coupled frequency response, Band 1,

ManualsPlus.com

below:

a. Enter the most positive number from Table 10-55, column 2. _____ dB

b. Enter the most negative number from Table 10-55, column 2. _____ dB

c. Subtract (b) from (a). _____ dB

68. Enter the results of the ac coupled frequency response, Band 0, below:

a. Enter the most positive number from Table 10-59, column 4. _____ dB

b. Enter the most positive number from Table 10-56, column 2. _____ dB

c. Of (a) and (b), enter whichever number is *more* positive. _____ dB

d. Enter the most negative number from Table 10-59, column 4. _____ dB

e. Enter the most negative number from Table 10-56, column 2. _____ dB

f. Of (d) and (e), enter whichever number is *more* negative. _____ dB

g. Subtract (f) from (c). _____ dB

69. Enter the results of the ac coupled frequency response, Band 1, below:

a. Enter the most positive number from Table 10-57, column 2. _____ dB

b. Enter the most positive number from Table 10-57, column 2. _____ dB

c. Enter the most negative number from Table 10-57, column 2. _____ dB

d. Subtract (b) from (a). _____ dB

Band Switching Uncertainty

70. Band 0 to Band 1 results (dc coupled):

a. Enter the value recorded in step 66 (c): _____ dB

b. Enter the value recorded in step 67 (b): _____ dB

ManualsPlus.com

c. Computetheabsolutevalueofthedifferencebetweenthesetwoentries. dB

71. Band 1 to Band 0 results (dc coupled):

a. Enter the value recorded in step 66 (f): _____ dB

b. Enter the value recorded in step 67 (a): _____ dB

c. Compute the absolute value of the difference between these two entries in dB.

72. Band 0 to Band 1 results (ac coupled):

a. Enter the value recorded in step 68 (c): _____ dB

b. Enter the value recorded in step 69 (b): _____ dB

c. Compute the absolute value of the difference between these two entries in dB.

73. Band 1 to Band 0 results (ac coupled):

a. Enter the value recorded in step 68 (f): _____ dB

b. Enter the value recorded in step 69 (a): _____ dB

c. Compute the absolute value of the difference between these two entries in dB.

ManualsPlus.com

Table 10-54 DC Coupled Frequency Response (50 MHz to 2.9 GHz)

Column 1 Frequency (MHz)	Column 2 Agilent 8902A Reading (dB)	Column 3 Cal Factor Frequency (GHz)	Column 4 Measurement Uncertainty (dB)
50		0.050	+0.32/–0.34
150		0.010	+0.32/–0.34
250		0.30	+0.32/–0.34
350		0.30	+0.32/–0.34
450		0.30	+0.32/–0.34
550		0.30	+0.32/–0.34
650		0.30	+0.32/–0.34
750		1.0	+0.32/–0.34
850		1.0	+0.32/–0.34
950		1.0	+0.32/–0.34
1050		1.0	+0.32/–0.34
1150		1.0	+0.32/–0.34
1250		1.0	+0.32/–0.34
1350		1.0	+0.32/–0.34
1450		1.0	+0.32/–0.34
1550		2.0	+0.32/–0.34
1650		2.0	+0.32/–0.34
1750		2.0	+0.32/–0.34
1850		2.0	+0.32/–0.34
1950		2.0	+0.32/–0.34
2050		2.0	+0.32/–0.34
2150		2.0	+0.32/–0.34
2250		2.0	+0.32/–0.34
2350		2.0	+0.32/–0.34
2450		2.0	+0.32/–0.34
2550		3.0	+0.32/–0.34
2650		3.0	+0.32/–0.34
2750		3.0	+0.32/–0.34
2850		3.0	+0.32/–0.34
2900		3.0	+0.32/–0.34

ManualsPlus.com

Table 10-55 DC Coupled Frequency Response (2.9 GHz to 6.5 GHz)

Column 1 Frequency (GHz)	Column 2 Agilent 8902A Reading (dB)	Column 3 Cal Factor Frequency (GHz)	Column 4 Measurement Uncertainty (dB)
2.95		3.0	+0.44/–0.49
3.05		3.0	+0.44/–0.49
3.15		3.0	+0.44/–0.49
3.25		3.0	+0.44/–0.49
3.35		3.0	+0.44/–0.49
3.45		3.0	+0.44/–0.49
3.55		4.0	+0.44/–0.49
3.65		4.0	+0.44/–0.49
3.75		4.0	+0.44/–0.49
3.85		4.0	+0.44/–0.49
3.95		4.0	+0.44/–0.49
4.05		4.0	+0.44/–0.49
4.15		4.0	+0.44/–0.49
4.25		4.0	+0.44/–0.49
4.35		4.0	+0.44/–0.49
4.45		4.0	+0.44/–0.49
4.55		5.0	+0.44/–0.49
4.65		5.0	+0.44/–0.49
4.75		5.0	+0.44/–0.49
4.85		5.0	+0.44/–0.49
4.95		5.0	+0.44/–0.49
5.05		5.0	+0.44/–0.49
5.15		5.0	+0.44/–0.49
5.25		5.0	+0.44/–0.49
5.35		5.0	+0.44/–0.49
5.45		5.0	+0.44/–0.49
5.55		6.0	+0.44/–0.49
5.65		6.0	+0.44/–0.49
5.75		6.0	+0.44/–0.49
5.85		6.0	+0.44/–0.49
5.95		6.0	+0.44/–0.49
6.05		6.0	+0.44/–0.49
6.15		6.0	+0.44/–0.49
6.25		6.0	+0.44/–0.49
6.35		6.0	+0.44/–0.49
6.45		6.0	+0.44/–0.49
6.50		6.0	+0.44/–0.49

ManualsPlus.com

Table 10-56 AC Coupled Frequency Response (50 MHz to 2.9 GHz)

Column 1 Frequency (MHz)	Column 2 Agilent 8902A Reading (dB)	Column 3 Cal Factor Frequency (GHz)	Column 4 Measurement Uncertainty (dB)
50		0.050	+0.32/–0.34
150		0.010	+0.32/–0.34
250		0.30	+0.32/–0.34
350		0.30	+0.32/–0.34
450		0.30	+0.32/–0.34
550		0.30	+0.32/–0.34
650		0.30	+0.32/–0.34
750		1.0	+0.32/–0.34
850		1.0	+0.32/–0.34
950		1.0	+0.32/–0.34
1050		1.0	+0.32/–0.34
1150		1.0	+0.32/–0.34
1250		1.0	+0.32/–0.34
1350		1.0	+0.32/–0.34
1450		1.0	+0.32/–0.34
1550		2.0	+0.32/–0.34
1650		2.0	+0.32/–0.34
1750		2.0	+0.32/–0.34
1850		2.0	+0.32/–0.34
1950		2.0	+0.32/–0.34
2050		2.0	+0.32/–0.34
2150		2.0	+0.32/–0.34
2250		2.0	+0.32/–0.34
2350		2.0	+0.32/–0.34
2450		2.0	+0.32/–0.34
2550		3.0	+0.32/–0.34
2650		3.0	+0.32/–0.34
2750		3.0	+0.32/–0.34
2850		3.0	+0.32/–0.34
2900		3.0	+0.32/–0.34

ManualsPlus.com

Table 10-57 AC Coupled Frequency Response (2.9 GHz to 6.5 GHz)

Column 1 Frequency (GHz)	Column 2 Agilent 8902A Reading (dB)	Column 3 Cal Factor Frequency (GHz)	Column 4 Measurement Uncertainty (dB)
2.95		3.0	+0.44/–0.49
3.05		3.0	+0.44/–0.49
3.15		3.0	+0.44/–0.49
3.25		3.0	+0.44/–0.49
3.35		3.0	+0.44/–0.49
3.45		3.0	+0.44/–0.49
3.55		4.0	+0.44/–0.49
3.65		4.0	+0.44/–0.49
3.75		4.0	+0.44/–0.49
3.85		4.0	+0.44/–0.49
3.95		4.0	+0.44/–0.49
4.05		4.0	+0.44/–0.49
4.15		4.0	+0.44/–0.49
4.25		4.0	+0.44/–0.49
4.35		4.0	+0.44/–0.49
4.45		4.0	+0.44/–0.49
4.55		4.0	+0.44/–0.49
4.65		5.0	+0.44/–0.49
4.75		5.0	+0.44/–0.49
4.85		5.0	+0.44/–0.49
4.95		5.0	+0.44/–0.49
5.05		5.0	+0.44/–0.49
5.15		5.0	+0.44/–0.49
5.25		5.0	+0.44/–0.49
5.35		5.0	+0.44/–0.49
5.45		5.0	+0.44/–0.49
5.55		6.0	+0.44/–0.49
5.65		6.0	+0.44/–0.49
5.75		6.0	+0.44/–0.49
5.85		6.0	+0.44/–0.49
5.95		6.0	+0.44/–0.49
6.05		6.0	+0.44/–0.49
6.15		6.0	+0.44/–0.49
6.25		6.0	+0.44/–0.49
6.35		6.0	+0.44/–0.49
6.45		6.0	+0.44/–0.49
6.50		6.0	+0.44/–0.49

ManualsPlus.com

Table 10-58 DC Coupled Frequency Response (<50 MHz)

Column 1 Frequency	Column 2 Agilent 3335A Amplitude (dBm)	Column 3 Response Relative to 50 MHz	Column 4 Response Relative to 300 MHz	Column 5 Measurement Uncertainty (dB)
50 MHz		0 (Ref.)		+0.27/–0.28
20 MHz				+0.27/–0.28
10 MHz				+0.27/–0.28
1 MHz				+0.27/–0.28
100 kHz				+0.27/–0.28
10 kHz				+0.27/–0.28
1 kHz				+0.27/–0.28
500 Hz				+0.27/–0.28
200 Hz				+0.27/–0.28

Table 10-59 AC Coupled Frequency Response (<50 MHz)

Column 1 Frequency	Column 2 Agilent 3335A Amplitude (dBm)	Column 3 Response Relative to 50 MHz	Column 4 Response Relative to 300 MHz	Column 5 Measurement Uncertainty (dB)
50 MHz		0 (Ref.)		+0.27/–0.28
20 MHz				+0.27/–0.28
10 MHz				+0.27/–0.28
5 MHz				+0.27/–0.28
1 MHz				+0.27/–0.28
500 kHz				+0.27/–0.28
100 kHz				+0.27/–0.28

ManualsPlus.com

38. Frequency Response: Agilent 8562E/EC

Instrument Under Test

Agilent 8562E/EC

Related Specification

Relative Frequency Response
Absolute Frequency Response
Band Switching Uncertainty

Related Adjustment

Frequency Response Adjustment
LO Distribution Amplifier Adjustment

Description

The output of a synthesized sweeper is fed through a power splitter to a power sensor, then to the spectrum analyzer. The synthesized sweeper power level is adjusted at 300 MHz to place the displayed signal at the spectrum analyzer center horizontal graticule line. The measuring receiver, used as a power meter, is placed in ratio mode. At each new synthesized sweeper frequency and spectrum analyzer center frequency, the sweeper power level is adjusted to place the signal at the center horizontal graticule line. The measuring receiver displays the inverse of the frequency response relative to the calibrator.

Figure 10-44 Frequency Response Test Setup, 50 MHz to 6.5 GHz

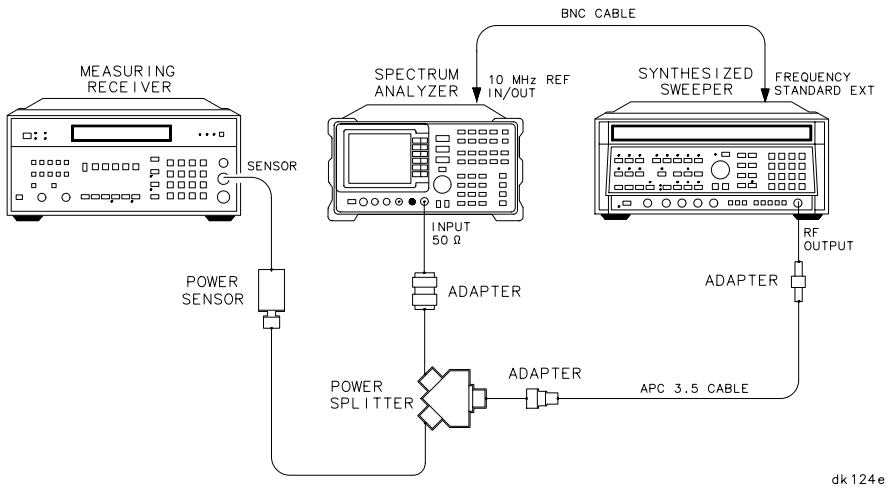

ManualsPlus.com

Figure 10-45 Frequency Response Test Setup, <50 MHz

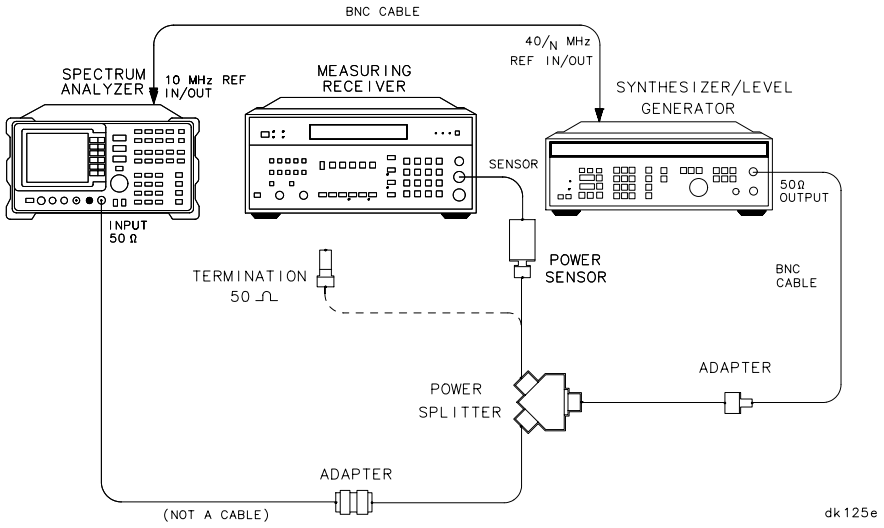

Equipment

Measuring receiver . . . . . Agilent 8902A

Synthesized sweeper . . . . . .Agilent 8340A/B

Synthesizer/level generator. . . . . Agilent 3335A

Power sensor. . . . . Agilent 8481A

Power splitter . . . . . .Agilent 11667A/B

Coaxial 50 Ω termination . . . . . Agilent 908A

Adapters

APC 3.5 (f) to APC 3.5 (f). 5061-5311

Type N (m) to type N (m). 1250-1475

Type N (m) to BNC (f) 1250-1476

Type N (f) to APC 3.5 (f). 1250-1744

Cables

BNC, 122 cm (48 in.) *(2 required)* . . . . . Agilent 10503A

Procedure

1. Zero and calibrate the Agilent 8902A and the Agilent 8481A in log mode, as described in the Agilent 8902A Operation Manual. Enter the power sensor 300 MHz calibration factor into the Agilent 8902A.

ManualsPlus.com

2. Connect the equipment as shown in Figure 10-44.
3. On the Agilent 8340A/B, press **INSTR PRESET**. Set the controls as follows:

   CW frequency . . . . . 300 MHz

   Frequency step . . . . . 100 MHz

   Power level . . . . . –4 dBm

   Frequency standard switch (rear panel). . . . . EXT

4. On the spectrum analyzer, press **PRESET**. Set the controls as follows:

   Center frequency . . . . . 300 MHz

   Center frequency step . . . . . 100 MHz

   Span . . . . . 0 Hz

   Reference level . . . . . –5 dBm

   dB/division . . . . . 1 dB

   Resolution BW . . . . . 300 kHz

   Coupling . . . . . dc

5. On the spectrum analyzer, press **MKR**.
6. On the Agilent 8340A/B, adjust the power level for a MKR amplitude of –10 dBm ±0.05 dB.
7. Press **RATIO** on the Agilent 8902A.

DC Coupled Frequency Response, Band 0 (≥50 MHz)

8. Set the Agilent 8340A/B CW to 50 MHz.
9. On the spectrum analyzer, press **FREQUENCY, CENTER FREQ**, 50, **MHz**.
10. On the Agilent 8340A/B, adjust the power level for a spectrum analyzer MKR amplitude reading of –10 dBm ±0.05 dB.
11. Record the negative of the power ratio displayed on the Agilent 8902A in Table 10-60, column 2. Record the power ratio here:

    Agilent 8902A reading at 50 MHz (dc coupled): _____ dB

12. Set the Agilent 8340A/B CW to 150 MHz.
13. On the spectrum analyzer, press **FREQUENCY, CENTER FREQ**, 150, **MHz**.

ManualsPlus.com

14. On the Agilent 8340A/B, adjust the power level for a spectrum analyzer MKR amplitude reading of –10 dBm ±0.05 dB.
15. Record the negative of the power ratio displayed on the Agilent 8902A, in Table 10-60, column 2.
16. On the Agilent 8340A/B, press **CW,** ⇑.
17. On the spectrum analyzer, press **FREQUENCY**, ⇑ to step through the remaining frequencies listed in Table 10-60. At each new frequency, repeat steps 14 through 16, entering the power sensor calibration factors into the Agilent 8902A as indicated in Table 10-60.

NOTE It is necessary to enter the last synthesized sweeper and spectrum analyzer frequency, (2.9 GHz) manually. The step functions will set the frequency to 2.95 GHz.

DC Coupled Frequency Response, Band 1

18. On the spectrum analyzer, press **FREQUENCY,** 2.95, **GHz**.
19. Set the Agilent 8340A/B CW to 2.95 GHz.
20. On the spectrum analyzer, press **AUX CTRL, INTERNAL MIXER, PRESEL AUTO PK**. Wait for the PEAKING message to disappear.
21. On the Agilent 8340A/B adjust the power level for a spectrum analyzer MKR amplitude reading of –10 dBm ±0.05 dB.
22. Record the negative of the power ratio displayed on the Agilent 8902A in Table 10-61, column 2.
23. Press **CW** ⇓ on the Agilent 8340A/B.
24. On the spectrum analyzer, press **FREQUENCY**, ⇑ to step through the remaining frequencies listed in Table 10-61. At each new frequency, repeat steps 20 through 23, entering the power sensor calibration factors into the Agilent 8902A as indicated in Table 10-61.

NOTE It will be necessary to enter the last synthesizer sweeper and spectrum analyzer frequency, 6.5 GHz, manually; the step functions will set the frequency to 6.55 GHz.

DC Coupled Frequency Response, Band 2

25. On the spectrum analyzer, press **FREQUENCY,** 6.5, **GHz**, **CF STEP**, 200, **MHz**.
26. Set the Agilent 8340A/B CW to 6.5 GHz and the FREQ STEP to 200 MHz.

ManualsPlus.com

27. Press **AUX CTRL, INTERNAL MIXER, PRESEL AUTO PEAK**. Wait for the `PEAKING!` message to disappear.

28. On the Agilent 8340A/B, adjust the power level for a spectrum analyzer MKR amplitude reading of –10 dBm ±0.05 dB.

29. Record the negative of the power ratio displayed on the Agilent 8902A in Table 10-62 as the Agilent 8902A reading.

30. On the Agilent 8340A/B, press **CW,** ⇑.

31. On the spectrum analyzer, press **FREQUENCY**, ⇑ to step through the remaining frequencies listed in Table 10-62. At each new frequency, repeat steps 27 through 29, entering the power sensor calibration factors indicated in Table 10-62 into the Agilent 8902A.

AC Coupled Frequency Response, Band 0 (≥50 MHz)

32. Enter the power sensor 50 MHz calibration factor into the Agilent 8902A.

33. On the spectrum analyzer, press **AMPLITUDE, MORE 1 OF 3**, **COUPLING AC**.

34. Set the Agilent 8340A/B to 300 MHz, CW.

35. On the spectrum analyzer, press **FREQUENCY**, **CENTER FREQ**, 300, **MHz**. Press **MKR**.

36. On the Agilent 8340A/B, adjust the power level for a MKR amplitude of –10 dBm ±0.05 dB.

37. Press **RATIO** on the Agilent 8902A.

38. Set the Agilent 8340A/B CW to 50 MHz.

39. On the spectrum analyzer, press **FREQUENCY, CENTER FREQ**, 50, **MHz**.

40. On the Agilent 8340A/B, adjust the power level for a spectrum analyzer MKR amplitude reading of –10 dBm ±0.05 dB.

41. Record the negative of the power ratio displayed on the Agilent 8902A, in Table 10-63, column 2. Record the power ratio below:

Agilent 8902A reading at 50 MHz (ac coupled): _____ dB

42. Set the Agilent 8340A/B CW to 150 MHz.

43. On the spectrum analyzer, press **FREQUENCY**, **CENTER FREQ**, 150, **MHz**.

44. On the Agilent 8340A/B, adjust the power level for a spectrum analyzer MKR amplitude reading of –10 dBm ±0.05 dB.

ManualsPlus.com

45. Record the negative of the power ratio displayed on the Agilent 8902A, in Table 10-63, column 2.

46. On the Agilent 8340A/B, press **CW,** ⇑.

47. On the spectrum analyzer, press **FREQUENCY,** ⇑ to step through the remaining frequencies listed in Table 10-63. At each new frequency, repeat steps 44 through 46, entering the power sensor calibration factors into the Agilent 8902A as indicated in Table 10-63.

NOTE It will be necessary to enter the last synthesizer sweeper and spectrum analyzer frequency, 2.9 GHz, manually; the step functions will set the frequency to 2.95 GHz.

AC Coupled Frequency Response, Band 1

48. On the spectrum analyzer, press **FREQUENCY,** 2.95, **GHz**.

49. Set the Agilent 8340A/B CW to 2.95 GHz.

50. On the spectrum analyzer, press **AUX CTRL, INTERNAL MIXER**, **PRESEL AUTO PK**. Wait for the PEAKING message to disappear.

51. On the Agilent 8340A/B adjust the power level for a spectrum analyzer MKR amplitude reading of –10 dBm ±0.05 dB.

52. Record the negative of the power ratio displayed on the Agilent 8902A in Table 10-64, column 2.

53. Press **CW,** ⇑ on the Agilent 8340A/B.

54. On the spectrum analyzer, press **FREQUENCY**, ⇑ to step through the remaining frequencies listed in Table 10-64. At each new frequency, repeat steps 50 through 53, entering the power sensor calibration factors into the Agilent 8902A as indicated in Table 10-64.

NOTE It will be necessary to enter the last synthesizer sweeper and spectrum analyzer frequency, 6.5 GHz, manually; the step functions will set the frequency to 6.55 GHz.

AC Coupled Frequency Response, Band 2

55. On the spectrum analyzer, press **FREQUENCY**, 6.5, **GHz**, **CF STEP**, 200, **MHz**.

56. Set the Agilent 8340A/B CW to 6.5 GHz and the FREQ STEP to 200 MHz.

57. Press **AUX CTRL, INTERNAL MIXER**, **PRESEL AUTO PEAK**. Wait for the PEAKING! message to disappear.

ManualsPlus.com

58. On the Agilent 8340A/B, adjust the power level for a spectrum analyzer MKR amplitude reading of –10 dBm ±0.05 dB.

59. Record the negative of the power ratio displayed on the Agilent 8902A in Table 10-65 as the Agilent 8902A reading.

60. On the Agilent 8340A/B, press **CW**, ⇑.

61. On the spectrum analyzer, press **FREQUENCY**, ⇑ to step through the remaining frequencies listed in Table 10-65. At each new frequency, repeat steps 57 through 60, entering the power sensor calibration factors indicated in Table 10-65 into the Agilent 8902A.

DC Coupled Frequency Response (<50 MHz)

62. Connect the equipment as shown in Figure 10-45 with the power sensor still connected to the power splitter.

63. On the spectrum analyzer, press **AMPLITUDE**, **MORE 1 OF 3**, **COUPLING DC**. Set the controls as follows:

    Center frequency . . . . . 50 MHz

    Span . . . . . 100 Hz

    Resolution BW . . . . . 10 Hz

    Marker . . . . . off

    Video BW . . . . . 1 Hz

64. On the Agilent 3335A, set the controls as follows:

    Frequency . . . . . 50 MHz

    Amplitude . . . . . –4 dBm

    Amplitude increment . . . . . 0.01 dB

65. Enter the power sensor 50 MHz calibration factor into the Agilent 8902A.

66. Adjust the Agilent 3335A amplitude until the Agilent 8902A display reads the same value as recorded in step 11. Record the Agilent 3335A amplitude here, and in Table 10-66:

    Agilent 3335A amplitude (50 MHz):_____ dBm

67. Replace the Agilent 8481A power sensor with the Agilent 908A 50 Ω termination and adapter.

68. On the spectrum analyzer, press **PEAK SEARCH, MARKER DELTA**.

ManualsPlus.com

69. Set the spectrum analyzer center frequency and the Agilent 3335A frequency to the frequencies listed in Table 10-66. At each frequency press **PEAK SEARCH** on the spectrum analyzer and adjust the Agilent 3335A amplitude for a Δ MKR amplitude reading of 0.00 ±0.05 dB. Record the Agilent 3335A amplitude setting in Table 10-66, column 2, as the Agilent 3335A amplitude.

70. For each of the frequencies listed in Table 10-66, subtract the Agilent 3335A amplitude reading (column 2) from the Agilent 3335A amplitude (50 MHz) recorded in step 66. Record the results as the response relative to 50 MHz in Table 10-66, column 3.

71. Add to each of the response relative to 50 MHz entries in Table 10-66 the Agilent 8902A reading for 50 MHz listed in Table 10-60. Use the value from Table 10-66 for the ac coupled frequency. Record the results as the response relative to 300 MHz, in Table 10-66, column 4.

AC Coupled Frequency Response (<50 MHz)

72. On the spectrum analyzer, press **AMPLITUDE MORE 1 OF 3 COUPLING AC**.

73. Set the controls as follows:

Center frequency . . . . . 50 MHz

Span . . . . . 100 Hz

Resolution BW . . . . . 10 Hz

Marker . . . . . off

Video BW . . . . . 1 Hz

74. On the Agilent 3335A, set the controls as follows:

Frequency . . . . . 50 MHz

Amplitude . . . . . –4 dBm

Amplitude increment . . . . . 0.01 dB

75. Enter the power sensor 50 MHz calibration factor into the Agilent 8902A. Replace the 50 Ω termination with the power sensor.

76. Adjust the Agilent 3335A amplitude until the Agilent 8902A display reads the same value as recorded in step 29. Record the Agilent 3335A amplitude here and in Table 10-67:

Agilent 3335A amplitude (50 MHz):_____ dB

77. Replace the Agilent 8481A power sensor with the Agilent 908A 50 Ω termination and adapter.

ManualsPlus.com

78. On the spectrum analyzer, press **PEAK SEARCH, MARKER DELTA**.

79. Set the spectrum analyzer center frequency and the Agilent 3335A frequency to the values listed in Table 10-67. At each frequency, press **PEAK SEARCH** on the spectrum analyzer, and adjust the Agilent 3335A amplitude for a Δ MKR amplitude reading of 0.00 ±0.05 dB. Record the Agilent 3335A amplitude setting in Table 10-67, column 2, as the Agilent 3335A Amplitude.

80. For each of the frequencies listed in Table 10-67, subtract the Agilent 3335A Amplitude Reading (column 2) from the Agilent 3335A Amplitude (50 MHz) recorded in step 76. Record the results as the response relative to 50 MHz in Table 10-67, column 3.

81. Add to each of the response relative to 50 MHz entries in Table 10-67 the Agilent 8902A reading for 50 MHz listed in Table 10-63. Record the results as the response relative to 300 MHz, in Table 10-67, column 4.

82. Press **PRESET** on the spectrum analyzer.

Test Results

83. Enter the results of the dc coupled frequency response, Band 0, below:

a. Enter the most positive number from Table 10-66, column 4. _____ dB

b. Enter the most positive number from Table 10-60, column 2. _____ dB

c. Of (a) and (b), enter whichever number is *more* positive. _____ dB

d. Enter the most negative number from Table 10-66, column 4. _____ dB

e. Enter the most negative number from Table 10-60, column 2. _____ dB

f. Of (c) and (d), enter whichever number is *more* negative. _____ dB

g. Subtract (f) from (c). _____ dB

84. Enter the results of the dc coupled frequency response, Band 1, below:

a. Enter the most positive number from Table 10-61, column 2. _____ dB

ManualsPlus.com

b. Enter the most negative number from Table 10-61, column 2. _____ dB

c. Subtract (b) from (a). _____ dB

85. Enter the results of the dc coupled frequency response, Band 2, below:

a. Enter the most positive number from Table 10-62, column 2. _____ dB

b. Enter the most negative number from Table 10-62, column 2. _____ dB

c. Subtract (b) from (a). _____ dB

86. Enter the results of the ac coupled frequency response, Band 0, below:

a. Enter the most positive number from Table 10-67, column 4. _____ dB

b. Enter the most positive number from Table 10-63, column 2. _____ dB

c. Of (a) and (b), enter whichever number is *more* positive. _____ dB

d. Enter the most negative number from Table 10-67, column 4. _____ dB

e. Enter the most negative number from Table 10-63, column 2. _____ dB

f. Of (d) and (e), enter whichever number is *more* negative. _____ dB

g. Subtract (f) from (c). _____ dB

87. Enter the results of the ac coupled frequency response, Band 1, below:

a. Enter the most positive number from Table 10-64, column 2. _____ dB

b. Enter the most positive number from Table 10-64, column 2. _____ dB

c. Enter the most negative number from Table 10-64, column 2. _____ dB

d. Subtract (b) from (a). _____ dB

ManualsPlus.com

88. Enter the results of the ac coupled frequency response, Band 2, below:

a. Enter the most positive number from Table 10-65, column 2. _____ dB

b. Enter the most negative number from Table 10-65, column 2. _____ dB

c. Subtract (b) from (a). _____ dB

Frequency Response, Band 0, 100 MHz to 2.3 GHz

89. Enter the results of the dc coupled frequency response, Band 0, for the frequency range 100 MHz to 2.3 GHz:

a. Enter the most positive number from Table 10-60, column 2, for center frequencies between 100 MHz and 2.3 GHz. _____ dB

b. Enter the most negative number from Table 10-60, column 2, for center frequencies between 100 MHz and 2.3 GHz. _____ dB

c. Subtract (b) from (a). _____ dB

Band Switching Uncertainty DC Coupled

90. In the top row of Table 10-68, enter the values recorded in the indicated steps. For example, if step 85 (a) has a value of 1.22 dB, enter “1.22 dB” in the top row of the Band 2 column.

91. In the left column of Table 10-68, enter the values recorded in the indicated steps. For example, if step 85 (b) has a value of –0.95 dB, enter “–0.95 dB” in the left column of the Band 2 row.

92. Compute the other entries in Table 10-68 by taking the absolute value of the difference between the values in the left column and the top row.

Band Switching Uncertainty AC Coupled

93. In the top row of Table 10-69, enter the values recorded in the indicated steps. For example, if step 88 (a) has a value of 1.22 dB, enter “1.22 dB” in the top row of the Band 2 column.

94. In the left column of Table 10-69, enter the values recorded in the indicated steps. For example, if step 88 (b) has a value of –0.95 dB, enter “–0.95 dB” in the left column of the Band 2 row.

ManualsPlus.com

95. Compute the other entries in Table 10-69 by taking the absolute value of the difference between the values in the left column and the top row.

ManualsPlus.com

Table 10-60 DC Coupled Frequency Response, Band 0 (50 MHz to 2.9 GHz)

Column 1 Frequency (MHz)	Column 2 Agilent 8902A Reading (dB)	Column 3 Cal Factor Frequency (GHz)	Column 4 Measurement Uncertainty (dB)
50		0.050	+0.32/–0.34
150		0.010	+0.32/–0.34
250		0.30	+0.32/–0.34
350		0.30	+0.32/–0.34
450		0.30	+0.32/–0.34
550		0.30	+0.32/–0.34
650		0.30	+0.32/–0.34
750		1.0	+0.32/–0.34
850		1.0	+0.32/–0.34
950		1.0	+0.32/–0.34
1050		1.0	+0.32/–0.34
1150		1.0	+0.32/–0.34
1250		1.0	+0.32/–0.34
1350		1.0	+0.32/–0.34
1450		1.0	+0.32/–0.34
1550		2.0	+0.32/–0.34
1650		2.0	+0.32/–0.34
1750		2.0	+0.32/–0.34
1850		2.0	+0.32/–0.34
1950		2.0	+0.32/–0.34
2050		2.0	+0.32/–0.34
2150		2.0	+0.32/–0.34
2250		2.0	+0.32/–0.34
2350		2.0	+0.32/–0.34
2450		2.0	+0.32/–0.34
2550		3.0	+0.32/–0.34
2650		3.0	+0.32/–0.34
2750		3.0	+0.32/–0.34
2850		3.0	+0.32/–0.34
2900		3.0	+0.32/–0.34

ManualsPlus.com

Table 10-61 DC Coupled Frequency Response, Band 1 (2.9 GHz to 6.5 GHz)

Column 1 Frequency (GHz)	Column 2 Agilent 8902A Reading (dB)	Column 3 Cal Factor Frequency (GHz)	Column 4 Measurement Uncertainty (dB)
2.95		3.0	+0.44/–0.49
3.05		3.0	+0.44/–0.49
3.15		3.0	+0.44/–0.49
3.25		3.0	+0.44/–0.49
3.35		3.0	+0.44/–0.49
3.45		3.0	+0.44/–0.49
3.55		4.0	+0.44/–0.49
3.65		4.0	+0.44/–0.49
3.75		4.0	+0.44/–0.49
3.85		4.0	+0.44/–0.49
3.95		4.0	+0.44/–0.49
4.05		4.0	+0.44/–0.49
4.15		4.0	+0.44/–0.49
4.25		4.0	+0.44/–0.49
4.35		4.0	+0.44/–0.49
4.45		4.0	+0.44/–0.49
4.55		5.0	+0.44/–0.49
4.65		5.0	+0.44/–0.49
4.75		5.0	+0.44/–0.49
4.85		5.0	+0.44/–0.49
4.95		5.0	+0.44/–0.49
5.05		5.0	+0.44/–0.49
5.15		5.0	+0.44/–0.49
5.25		5.0	+0.44/–0.49
5.35		5.0	+0.44/–0.49
5.45		5.0	+0.44/–0.49
5.55		6.0	+0.44/–0.49
5.65		6.0	+0.44/–0.49
5.75		6.0	+0.44/–0.49
5.85		6.0	+0.44/–0.49
5.95		6.0	+0.44/–0.49
6.05		6.0	+0.44/–0.49
6.15		6.0	+0.44/–0.49
6.25		6.0	+0.44/–0.49
6.35		6.0	+0.44/–0.49
6.45		6.0	+0.44/–0.49
6.50		6.0	+0.44/–0.49

ManualsPlus.com

Table 10-62 DC Coupled Frequency Response, Band 2

Column 1 Frequency (GHz)	Column 2 Agilent 8902A Reading (dB)	Column 3 Cal Factor Frequency (GHz)	Column 4 Measurement Uncertainty (dB)
6.5		6.0	+0.45/–0.50 dB
6.7		7.0	+0.45/–0.50 dB
6.9		7.0	+0.45/–0.50 dB
7.1		7.0	+0.45/–0.50 dB
7.3		7.0	+0.45/–0.50 dB
7.5		7.0	+0.45/–0.50 dB
7.7		8.0	+0.45/–0.50 dB
7.9		8.0	+0.45/–0.50 dB
8.1		8.0	+0.45/–0.50 dB
8.3		8.0	+0.45/–0.50 dB
8.5		8.0	+0.45/–0.50 dB
8.7		9.0	+0.45/–0.50 dB
8.9		9.0	+0.45/–0.50 dB
9.1		9.0	+0.45/–0.50 dB
9.3		9.0	+0.45/–0.50 dB
9.5		9.0	+0.45/–0.50 dB
9.7		10.0	+0.45/–0.50 dB
9.9		10.0	+0.45/–0.50 dB
10.1		10.0	+0.45/–0.50 dB
10.3		10.0	+0.45/–0.50 dB
10.5		10.0	+0.45/–0.50 dB
10.7		11.0	+0.45/–0.50 dB
10.9		11.0	+0.45/–0.50 dB
11.1		11.0	+0.45/–0.50 dB
11.3		11.0	+0.45/–0.50 dB
11.5		11.0	+0.45/–0.50 dB
11.7		12.0	+0.45/–0.50 dB
11.9		12.0	+0.45/–0.50 dB
12.1		12.0	+0.45/–0.50 dB
12.3		12.0	+0.45/–0.50 dB
12.5		12.0	+0.45/–0.50 dB
12.7		13.0	+0.45/–0.50 dB
12.9		13.0	+0.45/–0.50 dB
13.1		13.0	+0.45/–0.50 dB
13.2		13.0	+0.45/–0.50 dB

ManualsPlus.com

Table 10-63 AC Coupled Frequency Response, Band 0 (50 MHz to 2.9 GHz)

Column 1 Frequency (MHz)	Column 2 HP 8902A Reading (dB)	Column 3 Cal Factor Frequency (GHz)	Column 4 Measurement Uncertainty (dB)
50		0.050	+0.32/–0.34
150		0.010	+0.32/–0.34
250		0.30	+0.32/–0.34
350		0.30	+0.32/–0.34
450		0.30	+0.32/–0.34
550		0.30	+0.32/–0.34
650		0.30	+0.32/–0.34
750		1.0	+0.32/–0.34
850		1.0	+0.32/–0.34
950		1.0	+0.32/–0.34
1050		1.0	+0.32/–0.34
1150		1.0	+0.32/–0.34
1250		1.0	+0.32/–0.34
1350		1.0	+0.32/–0.34
1450		1.0	+0.32/–0.34
1550		2.0	+0.32/–0.34
1650		2.0	+0.32/–0.34
1750		2.0	+0.32/–0.34
1850		2.0	+0.32/–0.34
1950		2.0	+0.32/–0.34
2050		2.0	+0.32/–0.34
2150		2.0	+0.32/–0.34
2250		2.0	+0.32/–0.34
2350		2.0	+0.32/–0.34
2450		2.0	+0.32/–0.34
2550		3.0	+0.32/–0.34
2650		3.0	+0.32/–0.34
2750		3.0	+0.32/–0.34
2850		3.0	+0.32/–0.34
2900		3.0	+0.32/–0.34

ManualsPlus.com

Table 10-64 AC Coupled Frequency Response, Band 1 (2.9 GHz to 6.5 GHz)

Column 1 Frequency (GHz)	Column 2 HP 8902A Reading (dB)	Column 3 Cal Factor Frequency (GHz)	Column 4 Measurement Uncertainty (dB)
2.95		3.0	+0.44/–0.49
3.05		3.0	+0.44/–0.49
3.15		3.0	+0.44/–0.49
3.25		3.0	+0.44/–0.49
3.35		3.0	+0.44/–0.49
3.45		3.0	+0.44/–0.49
3.55		4.0	+0.44/–0.49
3.65		4.0	+0.44/–0.49
3.75		4.0	+0.44/–0.49
3.85		4.0	+0.44/–0.49
3.95		4.0	+0.44/–0.49
4.05		4.0	+0.44/–0.49
4.15		4.0	+0.44/–0.49
4.25		4.0	+0.44/–0.49
4.35		4.0	+0.44/–0.49
4.45		4.0	+0.44/–0.49
4.55		4.0	+0.44/–0.49
4.65		5.0	+0.44/–0.49
4.75		5.0	+0.44/–0.49
4.85		5.0	+0.44/–0.49
4.95		5.0	+0.44/–0.49
5.05		5.0	+0.44/–0.49
5.15		5.0	+0.44/–0.49
5.25		5.0	+0.44/–0.49
5.35		5.0	+0.44/–0.49
5.45		5.0	+0.44/–0.49
5.55		6.0	+0.44/–0.49
5.65		6.0	+0.44/–0.49
5.75		6.0	+0.44/–0.49
5.85		6.0	+0.44/–0.49
5.95		6.0	+0.44/–0.49
6.05		6.0	+0.44/–0.49
6.15		6.0	+0.44/–0.49
6.25		6.0	+0.44/–0.49
6.35		6.0	+0.44/–0.49
6.45		6.0	+0.44/–0.49
6.50		6.0	+0.44/–0.49

ManualsPlus.com

Table 10-65 AC Coupled Frequency Response, Band 2

Column 1 Frequency (GHz)	Column 2 HP 8902A Reading (dB)	Column 3 Cal Factor Frequency (GHz)	Column 4 Measurement Uncertainty (dB)
6.5		6.0	+0.45/–0.50 dB
6.7		7.0	+0.45/–0.50 dB
6.9		7.0	+0.45/–0.50 dB
7.1		7.0	+0.45/–0.50 dB
7.3		7.0	+0.45/–0.50 dB
7.5		7.0	+0.45/–0.50 dB
7.7		8.0	+0.45/–0.50 dB
7.9		8.0	+0.45/–0.50 dB
8.1		8.0	+0.45/–0.50 dB
8.3		8.0	+0.45/–0.50 dB
8.5		8.0	+0.45/–0.50 dB
8.7		9.0	+0.45/–0.50 dB
8.9		9.0	+0.45/–0.50 dB
9.1		9.0	+0.45/–0.50 dB
9.3		9.0	+0.45/–0.50 dB
9.5		9.0	+0.45/–0.50 dB
9.7		10.0	+0.45/–0.50 dB
9.9		10.0	+0.45/–0.50 dB
10.1		10.0	+0.45/–0.50 dB
10.3		10.0	+0.45/–0.50 dB
10.5		10.0	+0.45/–0.50 dB
10.7		11.0	+0.45/–0.50 dB
10.9		11.0	+0.45/–0.50 dB
11.1		11.0	+0.45/–0.50 dB
11.3		11.0	+0.45/–0.50 dB
11.5		11.0	+0.45/–0.50 dB
11.7		12.0	+0.45/–0.50 dB
11.9		12.0	+0.45/–0.50 dB
12.1		12.0	+0.45/–0.50 dB
12.3		12.0	+0.45/–0.50 dB
12.5		12.0	+0.45/–0.50 dB
12.7		13.0	+0.45/–0.50 dB
12.9		13.0	+0.45/–0.50 dB
13.1		13.0	+0.45/–0.50 dB
13.2		13.0	+0.45/–0.50 dB

ManualsPlus.com

Table 10-66 DC Coupled Frequency Response (<50 MHz), Band 0

Column 1 Frequency	Column 2 Agilent 3335A Amplitude (dBm)	Column 3 Response Relative to 50 MHz	Column 4 Response Relative to 300 MHz	Column 5 Measurement Uncertainty (dB)
50 MHz		0 (Ref.)		+0.27/–0.28
20 MHz				+0.27/–0.28
10 MHz				+0.27/–0.28
1 MHz				+0.27/–0.28
100 kHz				+0.27/–0.28
10 kHz				+0.27/–0.28
1 kHz				+0.27/–0.28
500 Hz				+0.27/–0.28
200 Hz				+0.27/–0.28

Table 10-67 AC Coupled Frequency Response (<50 MHz), Band 0

Column 1 Frequency	Column 2 Agilent 3335A Amplitude (dBm)	Column 3 Response Relative to 50 MHz	Column 4 Response Relative to 300 MHz	Column 5 Measurement Uncertainty (dB)
50 MHz		0 (Ref.)		+0.27/–0.28
20 MHz				+0.27/–0.28
10 MHz				+0.27/–0.28
5 MHz				+0.27/–0.28
1 MHz				+0.27/–0.28
500 kHz				+0.27/–0.28
100 kHz				+0.27/–0.28

ManualsPlus.com

Table 10-68 Band Switching Uncertainty DC Coupled

	Band 0 Step 83 (c) _____	Band 1 Step 84 (a) _____	Band 2 Step 85 (a) _____
Band 0 Step 83 (f) _____	N/A	_____	_____
Band 1 Step 84 (b) _____	_____	N/A	_____
Band 2 Step 85 (b) _____	_____	_____	N/A

Table 10-69 Band Switching Uncertainty AC Coupled

	Band 0 Step 86 (c) _____	Band 1 Step 87 (a) _____	Band 2 Step 88 (a) _____
Band 0 Step 86 (f) _____	N/A	_____	_____
Band 1 Step 87 (b) _____	_____	N/A	_____
Band 2 Step 88 (b) _____	_____	_____	N/A

ManualsPlus.com

39. Frequency Response: Agilent 8563E/EC

Instrument Under Test

Agilent 8563E/EC

Related Specification

Relative Frequency Response
Absolute Frequency Response
Band Switching Uncertainty

Related Adjustment

RYTHM Adjustment
Frequency Response Adjustment
LO Distribution Amplifier Adjustment

Description

The output of the synthesized sweeper is fed through a power splitter to a power sensor, then to the spectrum analyzer. The synthesized sweeper power level is adjusted at 300 MHz to place the displayed signal at the center horizontal graticule line of the spectrum analyzer. The measuring receiver, used as a power meter, is placed in RATIO mode. At each new synthesized sweeper frequency and spectrum analyzer center frequency, the sweeper power level is adjusted to place the signal at the center horizontal graticule line. The measuring receiver displays the inverse of the frequency response relative to the calibrator.

Equipment

Measuring receiver . . . . . Agilent 8902A

Synthesized sweeper . . . . . Agilent 8340A/B

Synthesizer/level generator . . . . . Agilent 3335A

Power sensor . . . . . Agilent 8485A

Power splitter . . . . . Agilent 11667B

Coaxial 50 Ω termination . . . . . Agilent 909D

Adapters

Type N (m)-to-APC 3.5 (m) *(2 required)*. 1250-1743

Type N (f)-to-BNC (m). 1250-1476

ManualsPlus.com

APC 3.5 (f)-to-APC 3.5 (f). 5061-5311

Cables

BNC, 122 cm (48 in.) . . . . . Agilent 10503A

APC 3.5, 91 cm (36 in.). 8120-4921

Figure 10-46 Frequency Response Test Setup, 50 MHz to 26.5 GHz

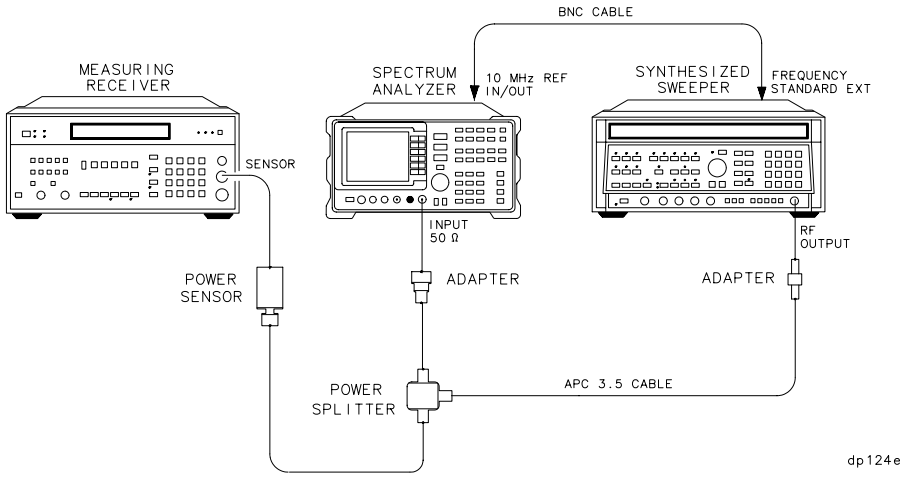

Figure 10-47 Frequency Response Test Setup, <50 MHz

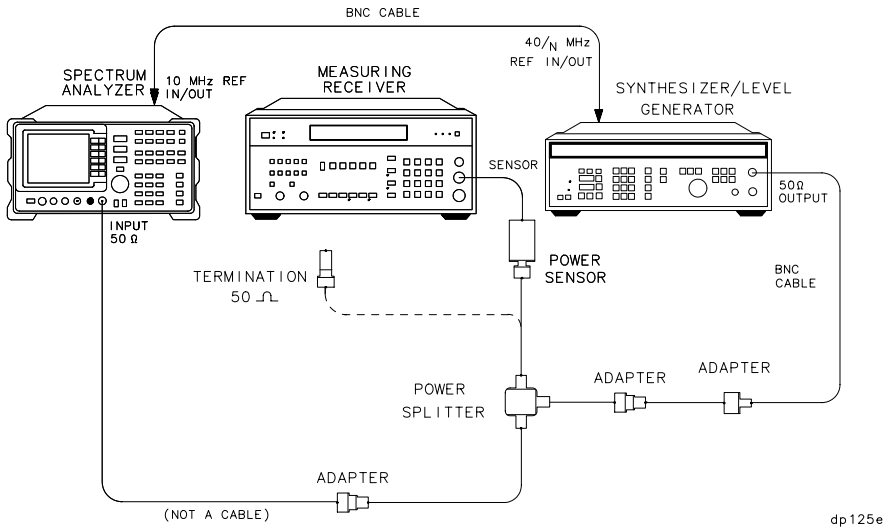

Procedure

1. Zero and calibrate the Agilent 8902A and the Agilent 8485A in LOG mode, as described in the Agilent 8902A Operation Manual. Enter the power sensor 300 MHz calibration factor into the Agilent 8902A.
2. Connect the equipment as shown in Figure 10-46.

ManualsPlus.com

3. On the Agilent 8340A/B, press **INSTR PRESET**. Set the controls as follows:

   CW frequency . . . . . 300 MHz

   Frequency step . . . . . 100 MHz

   Power level . . . . . –4 dBm

   Frequency standard switch (rear panel). . . . . EXT

4. On the spectrum analyzer, press **PRESET**. Press **RECALL**, **MORE 1 OF 2, FACTORY PRSEL PK**. Set the spectrum analyzer controls as follows:

   Center frequency . . . . . 300 MHz

   Center frequency step . . . . . 100 MHz

   Span . . . . . 0 Hz

   Reference level . . . . . –5 dBm

   dB/division . . . . . 1 dB

   Resolution BW . . . . . 300 kHz

5. On the spectrum analyzer, press **MKR**.
6. On the Agilent 8340A/B, adjust the power level for a MKR amplitude of –10 dBm ±0.05 dB.
7. Press **RATIO** on the Agilent 8902A.

Frequency Response, Band 0 (≥50 MHz)

8. Set the Agilent 8340A/B CW to 50 MHz.
9. On the spectrum analyzer, press **FREQUENCY, CENTER FREQ**, 50, **MHz**.
10. On the Agilent 8340A/B, adjust the power level for a spectrum analyzer MKR amplitude reading of –10 dBm ±0.05 dB.
11. Record the negative of the power ratio displayed on the Agilent 8902A in Table 10-70, column 2. Record the power ratio here:

    Agilent 8902A reading at 50 MHz_____ dB

12. Set the Agilent 8340A/B CW to 150 MHz.
13. On the spectrum analyzer, press **FREQUENCY, CENTER FREQ**, 150, **MHz**.
14. On the Agilent 8340A/B, adjust the power level for a spectrum analyzer MKR amplitude reading of –10 dBm ±0.05 dB.

ManualsPlus.com

15. Record the negative of the power ratio displayed on the Agilent 8902A, in Table 10-70, column 2.
16. On the Agilent 8340A/B, press **CW,** ⇑.
17. On the spectrum analyzer, press **FREQUENCY**, ⇑ to step through the remaining frequencies listed in Table 10-70. At each new frequency, repeat steps 14 through 16, entering the power sensor calibration factors indicated in Table 10-70 into the Agilent 8902A.

NOTE It will be necessary to enter the last synthesized sweeper and spectrum analyzer frequency, 2.9 GHz, manually; the step functions will set the frequency to 2.95 GHz.

Frequency Response, Band 1

18. On the spectrum analyzer, press **FREQUENCY,** 2.95, **GHz**.
19. Set the Agilent 8340A/B CW to 2.95 GHz.
20. Press **AUX CTRL, INTERNAL MIXER, PRESEL AUTO PEAK**. Wait for the `PEAKING!` message to disappear.
21. On the Agilent 8340A/B, adjust the power level for a spectrum analyzer MKR amplitude reading of –10 dBm ±0.05 dB.
22. Record the negative of the power ratio displayed on the Agilent 8902A in Table 10-71, column 2.
23. On the Agilent 8340A/B, press **CW**, ⇑.
24. On the spectrum analyzer, press **FREQUENCY**, ⇑⇓ to step through the remaining frequencies listed in Table 10-71. At each new frequency, repeat steps 20 through 23, entering the power sensor calibration factors indicated in Table 10-71 into the Agilent 8902A.

Frequency Response, Band 2

25. On the spectrum analyzer, press **FREQUENCY,** 6.5, **GHz**, **CF STEP**, 200, **MHz**.
26. Set the Agilent 8340A/B CW to 6.5 GHz and the FREQ STEP to 200 MHz.
27. Press **AUX CTRL, INTERNAL MIXER, PRESEL AUTO PEAK**. Wait for the `PEAKING!` message to disappear.
28. On the Agilent 8340A/B, adjust the power level for a spectrum analyzer MKR amplitude reading of –10 dBm ±0.05 dB.
29. Record the negative of the power ratio displayed on the Agilent 8902A in Table 10-72 as the Agilent 8902A reading.

ManualsPlus.com

30. On the Agilent 8340A/B, press **CW,** ⇑.

31. On the spectrum analyzer, press **FREQUENCY**, ⇑ to step through the remaining frequencies listed in Table 10-72. At each new frequency, repeat steps 27 through 29, entering the power sensor calibration factors indicated in Table 10-72 into the Agilent 8902A.

NOTE It will be necessary to enter the last synthesized sweeper and spectrum analyzer frequency, 13.2 GHz, manually; the step functions will set the frequency to 13.3 GHz.

Frequency Response, Band 3

32. On the spectrum analyzer, press **FREQUENCY,** 13.25, **GHz**.

33. Set the Agilent 8340A/B CW to 13.25 GHz.

34. Press **AUX CTRL**, **INTERNAL MIXER, PRESEL AUTO PEAK**. Wait for the `PEAKING!` message to disappear.

35. On the Agilent 8340A/B, adjust the power level for a spectrum analyzer MKR amplitude reading of –10 dBm ±0.05 dB.

36. Record the negative of the power ratio displayed on the Agilent 8902A in Table 10-73 as the Agilent 8902A reading.

37. Set the Agilent 8340A/B CW and spectrum analyzer CENTER FREQ to 13.3 GHz. Repeat steps 34 through 36.

38. On the Agilent 83650A, press **CW,** ⇑.

39. On the spectrum analyzer, press **FREQUENCY**, ⇑ to step through the remaining frequencies listed in Table 10-73. At each new frequency, repeat steps 34 through 39, skipping step 37, entering the power sensor calibration factors indicated in Table 10-73 into the Agilent 8902A.

Frequency Response, Band 0 (<50 MHz)

40. Set the spectrum analyzer controls as follows:

Center frequency . . . . . 50 MHz

Span . . . . . 100 Hz

Resolution BW . . . . . 10 Hz

Marker . . . . . off

41. Connect the equipment as shown in Figure 10-47 with the power sensor connected to the power splitter.

ManualsPlus.com

42. On the Agilent 3335A, set the controls as follows:

    Frequency . . . . . 50 MHz

    Amplitude. . . . . –4 dBm

    Amplitude increment . . . . . .0.01 dB

43. Enter the power sensor 50 MHz calibration factor into the Agilent 8902A.

44. Adjust the Agilent 3335A AMPLITUDE until the Agilent 8902A display reads the same value as recorded in step 11. Record the Agilent 3335A amplitude here, and in Table 10-74:

    Agilent 3335A amplitude (50 MHz):_____ dBm

45. Replace the Agilent 8485A power sensor with the Agilent 909D 50 Ω termination.

46. On the spectrum analyzer, press **PEAK SEARCH, MARKER DELTA**.

47. Set the spectrum analyzer CENTER FREQ and the Agilent 3335A FREQUENCY to the frequencies listed in Table 10-74. Test at frequencies less than 9 kHz only if the analyzer is equipped with Option 006. At each frequency, adjust the Agilent 3335A amplitude for a Δ MKR amplitude reading of 0.00 ±0.05 dB. Record the Agilent 3335A amplitude setting in Table 10-67, column 2, as the Agilent 3335A amplitude.

48. For each of the frequencies listed in Table 10-74, subtract the Agilent 3335A amplitude reading (column 2) from the Agilent 3335A amplitude (50 MHz) recorded in step 44. Record the results as the response relative to 50 MHz in Table 10-74, column 3.

49. Add to each of the “response relative to 50 MHz” entries in Table 10-74 the Agilent 8902A reading for 50 MHz listed in Table 10-70. Record the results as the response relative to 300 MHz, in Table 10-74, column 4.

ManualsPlus.com

Test Results

50. Frequency Response, Band 0

a. Enter the most positive number from Table 10-74, column 4. _____ dB

b. Enter the most positive number from Table 10-70, column 2. _____ dB

c. Of (a) and (b), enter whichever number is *more* positive. _____ dB

d. Enter the most negative number from Table 10-74, column 4. _____ dB

e. Enter the most negative number from Table 10-70, column 2. _____ dB

f. Of (d) and (e), enter whichever number is *more* negative. _____ dB

g. Subtract (f) from (c). _____ dB

51. Frequency Response, Band 1

a. Enter the most positive number from Table 10-71, column 2. _____ dB

b. Enter the most negative number from Table 10-71, column 2. _____ dB

c. Subtract (b) from (a). _____ dB

52. Frequency Response, Band 2

a. Enter the most positive number from Table 10-72, column 2. _____ dB

b. Enter the most negative number from Table 10-72, column 2. _____ dB

c. Subtract (b) from (a). _____ dB

ManualsPlus.com

53. Frequency Response, Band 3, 13.2 GHz to 22 GHz

a. Enter the most positive number from Table 10-73, column 2 for center frequencies less than or equal to 22 GHz. _____ dB

b. Enter the most negative number from Table 10-73, column 2 for center frequencies less than or equal to 22 GHz. _____ dB

c. Subtract (b) from (a). _____ dB

54. Frequency Response, Band 3, 22 GHz to 26.5 GHz

a. Enter the most positive number from Table 10-73, column 2 for center frequencies greater than 22 GHz. _____ dB

b. Enter the most negative number from Table 10-73, column 2 for center frequencies greater than 22 GHz. _____ dB

c. Subtract (b) from (a). _____ dB

Frequency Response, Band 0, 100 MHz to 2.0 GHz

55. This step applies only to spectrum analyzers with serial number prefix 3645A or later. Enter the results of the frequency response, Band 0, for the frequency range 100 MHz to 2.0 GHz:

a. Enter the most positive number from Table 10-70, column 2, for center frequencies between 100 MHz and 2.0 GHz. _____ dB

b. Enter the most negative number from Table 10-70, column 2, for center frequencies between 100 MHz and 2.0 GHz. _____ dB

c. Subtract (b) from (a). _____ dB

56. Frequency Response, Band 3, 13.2 GHz to 26.5 GHz

a. Enter the most positive number from 53 (a) and 54 (a). _____ dB

b. Enter the most negative number from 53 (b) and 54 (b). _____ dB

ManualsPlus.com

Band Switching Uncertainty

57. In the top row of Table 10-75, enter the values recorded in the indicated steps. For example, if step 53 (a) has a value of 1.22 dB, enter “1.22 dB” in the top row of the Band 3 column.
58. In the left column of Table 10-75, enter the values recorded in the indicated steps. For example, if step 52 (b) has a value of –0.95 dB, enter “–0.95 dB” in the left column of the Band 2 row.
59. Compute the other entries in Table 10-75 by taking the absolute value of the difference between the values in the left column and the top row.

ManualsPlus.com

Table 10-70 Frequency Response, Band 0 (≥50 MHz)

Column 1 Frequency (MHz)	Column 2 Agilent 8902A Reading (dB)	Column 3 Cal Factor Frequency (GHz)	Column 4 Measurement Uncertainty (dB)
50		0.05	+0.32/–0.34
150		0.05	+0.32/–0.34
250		0.05	+0.32/–0.34
350		0.05	+0.32/–0.34
450		0.05	+0.32/–0.34
550		0.05	+0.32/–0.34
650		0.05	+0.32/–0.34
750		0.05	+0.32/–0.34
850		0.05	+0.32/–0.34
950		0.05	+0.32/–0.34
1050		0.05	+0.32/–0.34
1150		2.0	+0.32/–0.34
1250		2.0	+0.32/–0.34
1350		2.0	+0.32/–0.34
1450		2.0	+0.32/–0.34
1550		2.0	+0.32/–0.34
1650		2.0	+0.32/–0.34
1750		2.0	+0.32/–0.34
1850		2.0	+0.32/–0.34
1950		2.0	+0.32/–0.34
2050		2.0	+0.32/–0.34
2150		2.0	+0.32/–0.34
2250		2.0	+0.32/–0.34
2350		2.0	+0.32/–0.34
2450		2.0	+0.32/–0.34
2550		3.0	+0.32/–0.34
2650		3.0	+0.32/–0.34
2750		3.0	+0.32/–0.34
2850		3.0	+0.32/–0.34
2900		3.0	+0.32/–0.34

ManualsPlus.com

Table 10-71 Frequency Response, Band 1

Column 1 Frequency (GHz)	Column 2 Agilent 8902A Reading (dB)	Column 3 Cal Factor Frequency (GHz)	Column 4 Measurement Uncertainty (dB)
2.95		3.0	+0.44/–0.49
3.05		3.0	+0.44/–0.49
3.15		3.0	+0.44/–0.49
3.25		3.0	+0.44/–0.49
3.35		3.0	+0.44/–0.49
3.45		3.0	+0.44/–0.49
3.55		4.0	+0.44/–0.49
3.65		4.0	+0.44/–0.49
3.75		4.0	+0.44/–0.49
3.85		4.0	+0.44/–0.49
3.95		4.0	+0.44/–0.49
4.05		4.0	+0.44/–0.49
4.15		4.0	+0.44/–0.49
4.25		4.0	+0.44/–0.49
4.35		4.0	+0.44/–0.49
4.45		4.0	+0.44/–0.49
4.55		5.0	+0.44/–0.49
4.65		5.0	+0.44/–0.49
4.75		5.0	+0.44/–0.49
4.85		5.0	+0.44/–0.49
4.95		5.0	+0.44/–0.49
5.05		5.0	+0.44/–0.49
5.15		5.0	+0.44/–0.49
5.25		5.0	+0.44/–0.49
5.35		5.0	+0.44/–0.49
5.45		5.0	+0.44/–0.49
5.55		6.0	+0.44/–0.49
5.65		6.0	+0.44/–0.49
5.75		6.0	+0.44/–0.49
5.85		6.0	+0.44/–0.49
5.95		6.0	+0.44/–0.49
6.05		6.0	+0.44/–0.49
6.15		6.0	+0.44/–0.49
6.25		6.0	+0.44/–0.49
6.35		6.0	+0.44/–0.49
6.45		6.0	+0.44/–0.49

ManualsPlus.com

Table 10-72 Frequency Response, Band 2

Column 1 Frequency (GHz)	Column 2 Agilent 8902A Reading (dB)	Column 3 Cal Factor Frequency (GHz)	Column 4 Measurement Uncertainty (dB)
6.5		6.0	+0.45/–0.50 dB
6.7		7.0	+0.45/–0.50 dB
6.9		7.0	+0.45/–0.50 dB
7.1		7.0	+0.45/–0.50 dB
7.3		7.0	+0.45/–0.50 dB
7.5		7.0	+0.45/–0.50 dB
7.7		8.0	+0.45/–0.50 dB
7.9		8.0	+0.45/–0.50 dB
8.1		8.0	+0.45/–0.50 dB
8.3		8.0	+0.45/–0.50 dB
8.5		8.0	+0.45/–0.50 dB
8.7		9.0	+0.45/–0.50 dB
8.9		9.0	+0.45/–0.50 dB
9.1		9.0	+0.45/–0.50 dB
9.3		9.0	+0.45/–0.50 dB
9.5		9.0	+0.45/–0.50 dB
9.7		10.0	+0.45/–0.50 dB
9.9		10.0	+0.45/–0.50 dB
10.1		10.0	+0.45/–0.50 dB
10.3		10.0	+0.45/–0.50 dB
10.5		10.0	+0.45/–0.50 dB
10.7		11.0	+0.45/–0.50 dB
10.9		11.0	+0.45/–0.50 dB
11.1		11.0	+0.45/–0.50 dB
11.3		11.0	+0.45/–0.50 dB
11.5		11.0	+0.45/–0.50 dB
11.7		12.0	+0.45/–0.50 dB
11.9		12.0	+0.45/–0.50 dB
12.1		12.0	+0.45/–0.50 dB
12.3		12.0	+0.45/–0.50 dB
12.5		12.0	+0.45/–0.50 dB
12.7		13.0	+0.45/–0.50 dB
12.9		13.0	+0.45/–0.50 dB
13.1		13.0	+0.45/–0.50 dB
13.2		13.0	+0.45/–0.50 dB

ManualsPlus.com

Table 10-73 Frequency Response, Band 3

Column 1 Frequency (GHz)	Column 2 Agilent 8902A Reading (dB)	Column 3 Cal Factor Frequency (GHz)	Column 4 Measurement Uncertainty (dB)
13.25		13.0	+0.46/–0.51 dB
13.3		13.0	+0.46/–0.51 dB
13.5		13.0	+0.46/–0.51 dB
13.7		14.0	+0.46/–0.51 dB
13.9		14.0	+0.46/–0.51 dB
14.1		14.0	+0.46/–0.51 dB
14.3		14.0	+0.46/–0.51 dB
14.5		14.0	+0.46/–0.51 dB
14.7		15.0	+0.46/–0.51 dB
14.9		15.0	+0.46/–0.51 dB
15.1		15.0	+0.46/–0.51 dB
15.3		15.0	+0.46/–0.51 dB
15.5		15.0	+0.46/–0.51 dB
15.7		16.0	+0.46/–0.51 dB
15.9		16.0	+0.46/–0.51 dB
16.1		16.0	+0.46/–0.51 dB
16.3		16.0	+0.46/–0.51 dB
16.5		16.0	+0.46/–0.51 dB
16.7		17.0	+0.46/–0.51 dB
16.9		17.0	+0.46/–0.51 dB
17.1		17.0	+0.46/–0.51 dB
17.3		17.0	+0.46/–0.51 dB
17.5		17.0	+0.46/–0.51 dB
17.7		18.0	+0.46/–0.51 dB
17.9		18.0	+0.46/–0.51 dB
18.1		18.0	+0.46/–0.51 dB
18.3		18.0	+0.46/–0.51 dB
18.5		18.0	+0.46/–0.51 dB
18.7		19.0	+0.46/–0.51 dB
18.9		19.0	+0.46/–0.51 dB
19.1		19.0	+0.46/–0.51 dB
19.3		19.0	+0.46/–0.51 dB
19.5		19.0	+0.46/–0.51 dB
19.7		20.0	+0.46/–0.51 dB
19.9		20.0	+0.51/–0.58

ManualsPlus.com

Table 10-73 Frequency Response, Band 3 (Continued)

Column 1 Frequency (GHz)	Column 2 Agilent 8902A Reading (dB)	Column 3 Cal Factor Frequency (GHz)	Column 4 Measurement Uncertainty (dB)
20.1		20.0	+0.51/–0.58
20.3		20.5	+0.51/–0.58
20.5		20.5	+0.51/–0.58
20.7		20.5	+0.51/–0.58
20.9		21.0	+0.51/–0.58
21.1		21.0	+0.51/–0.58
21.3		21.5	+0.51/–0.58
21.5		21.5	+0.51/–0.58
21.7		21.5	+0.51/–0.58
21.9		22.0	+0.51/–0.58
22.1		22.0	+0.51/–0.58
22.3		22.5	+0.51/–0.58
22.5		22.5	+0.51/–0.58
22.7		22.5	+0.51/–0.58
22.9		23.0	+0.51/–0.58
23.1		23.0	+0.51/–0.58
23.3		23.5	+0.51/–0.58
23.5		23.5	+0.51/–0.58
23.7		23.5	+0.51/–0.58
23.9		24.0	+0.51/–0.58
24.1		24.0	+0.51/–0.58
24.3		24.5	+0.51/–0.58
24.5		24.5	+0.51/–0.58
24.7		24.5	+0.51/–0.58
24.9		25.0	+0.51/–0.58
25.1		25.0	+0.51/–0.58
25.3		25.5	+0.51/–0.58
25.5		25.5	+0.51/–0.58
25.7		25.5	+0.51/–0.58
25.9		26.0	+0.51/–0.58
26.1		26.0	+0.51/–0.58
26.3		26.5	+0.51/–0.58
26.5		26.5	+0.51/–0.58

ManualsPlus.com

Table 10-74 Frequency Response, Band 0 (<50 MHz)

Column 1 Frequency	Column 2 Agilent 3335A Amplitude (dBm)	Column 3 Response Relative to 50 MHz	Column 4 Response Relative to 300 MHz	Column 5 Measurement Uncertainty (dB)
50 MHz		0 (Ref.)		+0.27/–0.28
20 MHz				+0.27/–0.28
10 MHz				+0.27/–0.28
1 MHz				+0.27/–0.28
100 kHz				+0.27/–0.28
9 kHz				+0.27/–0.28
1 kHz*				+0.27/–0.28
500 Hz*				+0.27/–0.28
200 Hz*				+0.27/–0.28
*These measurements apply only to analyzers equipped with Option 006.				

Table 10-75 Band Switching Uncertainty

	Band 0 Step 50 (c) _____	Band 1 Step 51 (a) _____	Band 2 Step 52 (a) _____	Band 3 <22 GHz Step 53 (a) _____	Band 3 >22 GHz Step 54 (a) _____
Band 0 Step 50 (f) _____	N/A	_____	_____	_____	_____
Band 1 Step 51 (b) _____	_____	N/A	_____	_____	_____
Band 2 Step 52 (b) _____	_____	_____	N/A	_____	_____

ManualsPlus.com

Table 10-75 Band Switching Uncertainty

	Band 0 Step 50 (c) _____	**Band 1 Step 51 (a)** _____	**Band 2 Step 52 (a)** _____	**Band 3 <22 GHz Step 53 (a)** _____	**Band 3 >22 GHz Step 54 (a)** _____
Band 3 <22 GHz Step 53 (b) _____	_____	_____	_____	N/A	_____
Band 3 >22 GHz Step 54 (b) _____	_____	_____	_____	_____	N/A

ManualsPlus.com

40. Frequency Response: Agilent 8564E/EC

Instrument Under Test

Agilent 8564E/EC

Related Specification

Relative Frequency Response
Absolute Frequency Response
Band Switching Uncertainty

Related Adjustment

RYTHM Adjustment
Frequency Response Adjustment
LO Distribution Amplifier Adjustment
SBTX Adjustment

Description

The output of the synthesized sweeper is fed through a power splitter to a power sensor, then to the spectrum analyzer. The synthesized sweeper power level is adjusted at 300 MHz to place the displayed signal at the center horizontal graticule line of the spectrum analyzer. The measuring receiver, used as a power meter, is placed in RATIO mode. At each new synthesized sweeper frequency and spectrum analyzer center frequency, the sweeper power level is adjusted to place the signal at the center horizontal graticule line. The measuring receiver displays the inverse of the frequency response relative to the calibrator.

Equipment

Measuring receiver . . . . . Agilent 8902A

Synthesized sweeper . . . . . Agilent 83650A

Synthesizer/level generator . . . . . Agilent 3335A

Power sensor . . . . . Agilent 8487A

Power splitter . . . . . Agilent 11667C

Coaxial 50 Ω termination . . . . . Agilent 85138B

ManualsPlus.com

Adapters

Type N (f) to 2.4 mm (m) . . . . . Agilent 11903C

Type N (m) to BNC (f) 1250-1476

Cables

BNC, 122 cm (48 in.) *(2 required)* . . . . . Agilent 10503A

2.4 mm, 91 cm (36 in.) 8120-6164

Figure 10-48 Frequency Response Test Setup, 50 MHz to 40 GHz

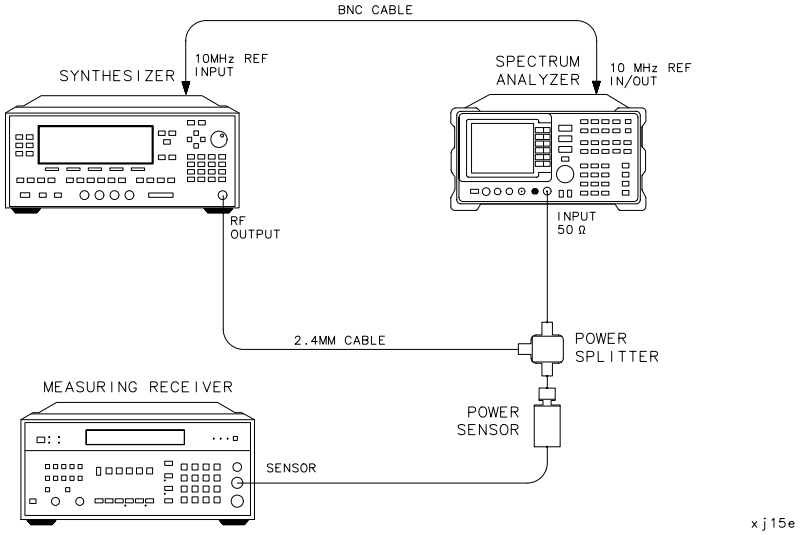

Figure 10-49 Frequency Response Test Setup, <50 MHz

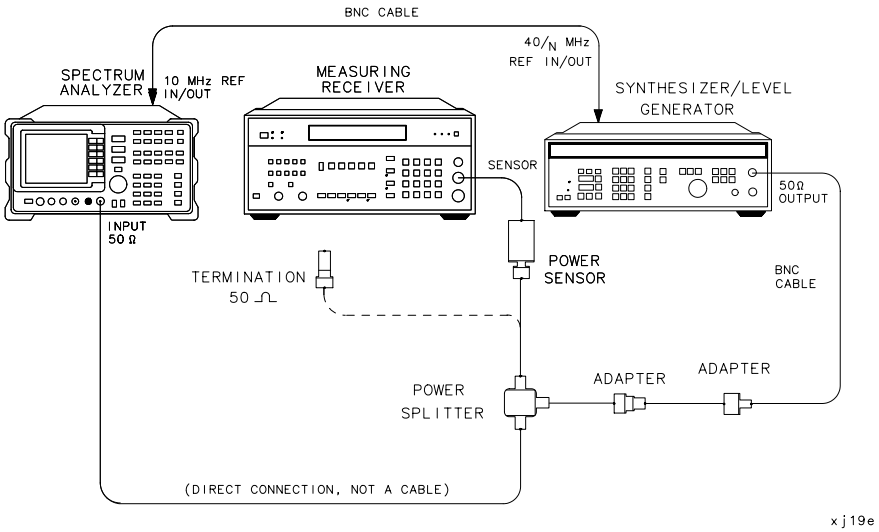

ManualsPlus.com

Procedure

1. Zero and calibrate the Agilent 8902A and the Agilent 8487A in LOG mode, as described in the Agilent 8902A Operation Manual. Enter the power sensor 300 MHz calibration factor into the Agilent 8902A.
2. Connect the equipment as shown in Figure 10-48.
3. On the Agilent 83650A, press **PRESET**. Set the controls as follows:

   CW frequency . . . . . 300 MHz

   Frequency step . . . . . 100 MHz

   Power level . . . . . –4 dBm

4. On the spectrum analyzer, press **PRESET**. Press **RECALL, MORE 1 OF 2, FACTORY PRSEL PK**. Set the spectrum analyzer controls as follows:

   Center frequency . . . . . 300 MHz

   Center frequency step . . . . . 100 MHz

   Span . . . . . 0 Hz

   Reference level . . . . . –5 dBm

   dB/division . . . . . 1 dB

   Resolution BW . . . . . 300 kHz

5. On the spectrum analyzer, press **MKR**.
6. On the Agilent 83650A, adjust the power level for a MKR amplitude of –10 dBm ±0.05 dB.
7. Press **RATIO** on the Agilent 8902A.

Frequency Response, Band 0 (≥50 MHz)

8. Set the Agilent 83650A CW to 50 MHz.
9. On the spectrum analyzer, press **FREQUENCY, CENTER FREQ**, 50, **MHz**.
10. On the Agilent 83650A, adjust the power level for a spectrum analyzer MKR amplitude reading of –10 dBm ±0.05 dB.
11. Record the negative of the power ratio displayed on the Agilent 8902A in Table 10-76, column 2. Record the power ratio here:

    Agilent 8902A reading at 50 MHz_____ dB

12. Set the Agilent 83650A CW to 150 MHz.

ManualsPlus.com

13. On the spectrum analyzer, press **FREQUENCY**, **CENTER FREQ**, 150, **MHz**.
14. On the Agilent 83650A, adjust the power level for a spectrum analyzer MKR amplitude reading of –10 dBm ±0.05 dB.
15. Record the negative of the power ratio displayed on the Agilent 8902A, in Table 10-76, column 2.
16. On the Agilent 83650A, press **CW,** ⇑.
17. On the spectrum analyzer, press **FREQUENCY**, ⇑ to step through the remaining frequencies listed in Table 10-76. At each new frequency, repeat steps 14 through 16, entering the power sensor calibration factors indicated in Table 10-76 into the Agilent 8902A.

NOTE It will be necessary to enter the last synthesized sweeper and spectrum analyzer frequency, 2.9 GHz, manually; the step functions will set the frequency to 2.95 GHz.

Frequency Response, Band 1

18. On the spectrum analyzer, press **FREQUENCY,** 2.95, **GHz**.
19. Set the Agilent 83650A CW to 2.95 GHz.
20. Press **AUX CTRL, INTERNAL MIXER, PRESEL AUTO PEAK**. Wait for the `PEAKING!` message to disappear.
21. On the Agilent 83650A, adjust the power level for a spectrum analyzer MKR amplitude reading of –10 dBm ±0.05 dB.
22. Record the negative of the power ratio displayed on the Agilent 8902A in Table 10-77, column 2.
23. On the Agilent 83650A, press **CW,** ⇑.
24. On the spectrum analyzer, press **FREQUENCY,** ⇑ to step through the remaining frequencies listed in Table 10-77. At each new frequency, repeat steps 20 through 23, entering the power sensor calibration factors indicated in Table 10-77 into the Agilent 8902A.

Frequency Response, Band 2

25. On the spectrum analyzer, press **FREQUENCY,** 6.5, **GHz**, **CF STEP**, 200, **MHz**.
26. Set the Agilent 83650A CW to 6.5 GHz and the FREQ STEP to 200 MHz.
27. Press **AUX CTRL**, **INTERNAL MIXER, PRESEL AUTO PEAK**. Wait for the `PEAKING!` message to disappear.

ManualsPlus.com

28. On the Agilent 83650A, adjust the power level for a spectrum analyzer MKR amplitude reading of –10 dBm ±0.05 dB.
29. Record the negative of the power ratio displayed on the Agilent 8902A in Table 10-78 as the Agilent 8902A reading.
30. On the Agilent 83650A, press **CW,** ⇑.
31. On the spectrum analyzer, press **FREQUENCY,** ⇑⇓ to step through the remaining frequencies listed in Table 10-78. At each new frequency, repeat steps 27 through 29, entering the power sensor calibration factors indicated in Table 10-78 into the Agilent 8902A.

NOTE It will be necessary to enter the last synthesized sweeper and spectrum analyzer frequency, 13.2 GHz, manually; the step functions will set the frequency to 13.3 GHz.

Frequency Response, Band 3

32. On the spectrum analyzer, press **FREQUENCY,** 13.25, **GHz**.
33. Set the Agilent 83650A CW to 13.25 GHz.
34. Press **AUX CTRL**, **INTERNAL MIXER**, **PRESEL AUTO PEAK**. Wait for the `PEAKING!` message to disappear.
35. On the Agilent 83650A, adjust the power level for a spectrum analyzer MKR amplitude reading of –10 dBm ±0.05 dB.
36. Record the negative of the power ratio displayed on the Agilent 8902A in Table 10-79 as the Agilent 8902A reading.
37. Set the Agilent 83650A CW and spectrum analyzer CENTER FREQ to 13.4 GHz. Repeat steps 34 through 36.
38. On the Agilent 83650A, press **CW**, ⇑.
39. On the spectrum analyzer, press **FREQUENCY,** ⇑ to step through the remaining frequencies listed in Table 10-79. At each new frequency, repeat steps 34 through 39, skipping step 37, entering the power sensor calibration factors indicated in Table 10-79 into the Agilent 8902A.

Frequency Response, Band 4

40. On the spectrum analyzer, press **FREQUENCY,** 26.9, **GHz**, **CF STEP**, 300, **MHz**.
41. Set the Agilent 83650A CW to 26.9 GHz and the FREQ STEP to 300 MHz.
42. Press **AUX CTRL, INTERNAL MIXER**, **PRESEL AUTO PEAK**. Wait for the

ManualsPlus.com

PEAKING! message to disappear.

43. On the Agilent 83650A, adjust the power level for a spectrum analyzer MKR amplitude reading of –10 dBm ±0.05 dB.

44. Record the negative of the power ratio displayed on the Agilent 8902A in Table 10-80 as the Agilent 8902A reading.

45. On the Agilent 83650A, press **CW,** ⇑.

46. On the spectrum analyzer, press **FREQUENCY,** ⇑ to step through the remaining frequencies listed in Table 10-80. At each new frequency, repeat steps 42 through 45, entering the power sensor calibration factors indicated in Table 10-80 into the Agilent 8902A.

Frequency Response, Band 5

47. On the spectrum analyzer, press **FREQUENCY,** 31.2, GHz, **CF STEP**, 400, **MHz**.

48. Set the Agilent 83650A CW to 31.20 GHz and the FREQ STEP to 400 MHz.

49. Press **AUX CTRL**, **INTERNAL MIXER, PRESEL AUTO PEAK**. Wait for the PEAKING! message to disappear.

50. On the Agilent 83650A, adjust the power level for a spectrum analyzer MKR amplitude reading of –10 dBm ±0.05 dB.

51. Record the negative of the power ratio displayed on the Agilent 8902A in Table 10-81 as the Agilent 8902A reading.

52. On the Agilent 83650A, press **CW,** ⇑.

53. On the spectrum analyzer, press **FREQUENCY**, ⇑.

54. On the spectrum analyzer, press **FREQUENCY,** ⇑ to step through the remaining frequencies listed in Table 10-81. At each new frequency, repeat steps 49 through 53, entering the power sensor calibration factors indicated in Table 10-81 into the Agilent 8902A.

Frequency Response, Band 0 (<50 MHz)

55. Set the spectrum analyzer controls as follows:

Center frequency . . . . . 50 MHz

Span . . . . . 100 Hz

Resolution BW . . . . . 10 Hz

Marker . . . . . off

56. Connect the equipment as shown in Figure 10-49 with the power

ManualsPlus.com

sensor connected to the power splitter.

57. On the Agilent 3335A, set the controls as follows:

    Frequency . . . . . 50 MHz

    Amplitude . . . . . –4 dBm

    Amplitude increment . . . . . 0.01 dB

58. Enter the power sensor 50 MHz calibration factor into the Agilent 8902A.

59. Adjust the Agilent 3335A AMPLITUDE until the Agilent 8902A display reads the same value as recorded in step 11. Record the Agilent 3335A amplitude here, and in Table 10-82:

    Agilent 3335A amplitude (50 MHz):_____ dBm

60. Replace the Agilent 8487A power sensor with the Agilent 85138B 50 Ω termination.

61. On the spectrum analyzer, press **PEAK SEARCH, MARKER DELTA**.

62. Set the spectrum analyzer CENTER FREQ and the Agilent 3335A FREQUENCY to the frequencies listed in Table 10-82. Test at frequencies less than 9 kHz only if the analyzer is equipped with Option 006. At each frequency, adjust the Agilent 3335A amplitude for a Δ MKR amplitude reading of 0.00 ±0.05 dB. Record the Agilent 3335A amplitude setting in Table 10-82, column 2, as the Agilent 3335A amplitude.

63. For each of the frequencies listed in Table 10-82, subtract the Agilent 3335A amplitude reading (column 2) from the Agilent 3335A amplitude (50 MHz) recorded in step 59. Record the results as the response relative to 50 MHz in Table 10-82, column 3.

64. Add to each of the “response relative to 50 MHz” entries in Table 10-82 the Agilent 8902A reading for 50 MHz listed in Table 10-76. Record the results as the response relative to 300 MHz, in Table 10-82, column 4.

ManualsPlus.com

Test Results

65. Frequency Response, Band 0

a. Enter the most positive number from Table 10-82, column 4. _____ dB

b. Enter the most positive number from Table 10-76, column 2. _____ dB

c. Of (a) and (b), enter whichever number is *more* positive. _____ dB

d. Enter the most negative number from Table 10-82, column 4. _____ dB

e. Enter the most negative number from Table 10-76, column 2. _____ dB

f. Of (d) and (e), enter whichever number is *more* negative. _____ dB

g. Subtract (f) from (c). _____ dB

66. Frequency Response, Band 1

a. Enter the most positive number from Table 10-77, column 2. _____ dB

b. Enter the most negative number from Table 10-77, column 2. _____ dB

c. Subtract (b) from (a). _____ dB

67. Frequency Response, Band 2

a. Enter the most positive number from Table 10-78, column 2. _____ dB

b. Enter the most negative number from Table 10-78, column 2. _____ dB

c. Subtract (b) from (a). _____ dB

ManualsPlus.com

68. Frequency Response, Band 3, 13.2 GHz to 22 GHz

a. Enter the most positive number from Table 10-79, column 2 for center frequencies less than or equal to 22 GHz. _____ dB

b. Enter the most negative number from Table 10-79, column 2 for center frequencies less than or equal to 22 GHz. _____ dB

c. Subtract (b) from (a). _____ dB

69. Frequency Response, Band 3, 22 GHz to 26.8 GHz

a. Enter the most positive number from Table 10-79, column 2 for center frequencies greater than 22 GHz. _____ dB

b. Enter the most negative number from Table 10-79, column 2 for center frequencies greater than 22 GHz. _____ dB

c. Subtract (b) from (a). _____ dB

70. Frequency Response, Band 3, 13.2 GHz to 26.8 GHz

a. Enter the most positive number from 69 (a) and 70 (a). _____ dB

b. Enter the most negative number from 69 (b) and 70 (b). _____ dB

71. Frequency Response, Band 4

a. Enter the most positive number from Table 10-80, column 2. _____ dB

b. Enter the most negative number from Table 10-80, column 2. _____ dB

c. Subtract (b) from (a). _____ dB

72. Frequency Response, Band 5

a. Enter the most positive number from Table 10-81, column 2. _____ dB

b. Enter the most negative number from Table 10-81, column 2. _____ dB

c. Subtract (b) from (a). _____ dB

ManualsPlus.com

Frequency Response, Band 0, 100 MHz to 2.0 GHz

73. This step applies only to spectrum analyzers with serial number prefix 3641A or later. Enter the results of the frequency response, Band 0, for the frequency range 100 MHz to 2.0 GHz:

a. Enter the most positive number from Table 10-76, column 2, for center frequencies between 100 MHz and 2.0 GHz. _____ dB

b. Enter the most negative number from Table 10-76, column 2, for center frequencies between 100 MHz and 2.0 GHz. _____ dB

c. Subtract (b) from (a). _____ dB

Band Switching Uncertainty

74. In the top row of Table 10-83, enter the values recorded in the indicated steps. For example, if step 68 (a) has a value of 1.22 dB, enter “1.22 dB” in the top row of the Band 3 column.

75. In the left column of Table 10-83, enter the values recorded in the indicated steps. For example, if step 67 (b) has a value of –0.95 dB, enter “–0.95 dB” in the left column of the Band 2 row.

76. Compute the other entries in Table 10-83 by taking the absolute value of the difference between the values in the left column and the top row.

ManualsPlus.com

Table 10-76 Frequency Response, Band 0 (≥50 MHz)

Column 1 Frequency (MHz)	Column 2 Agilent 8902A Reading (dB)	Column 3 Cal Factor Frequency (GHz)	Column 4 Measurement Uncertainty (dB)
50		0.05	+0.37/–0.41
150		0.05	+0.37/–0.41
250		0.05	+0.37/–0.41
350		0.05	+0.37/–0.41
450		0.05	+0.37/–0.41
550		0.05	+0.37/–0.41
650		0.05	+0.37/–0.41
750		0.05	+0.37/–0.41
850		0.05	+0.37/–0.41
950		0.05	+0.37/–0.41
1050		0.05	+0.37/–0.41
1150		2.0	+0.37/–0.41
1250		2.0	+0.37/–0.41
1350		2.0	+0.37/–0.41
1450		2.0	+0.37/–0.41
1550		2.0	+0.37/–0.41
1650		2.0	+0.37/–0.41
1750		2.0	+0.37/–0.41
1850		2.0	+0.37/–0.41
1950		2.0	+0.37/–0.41
2050		2.0	+0.37/–0.41
2150		2.0	+0.37/–0.41
2250		2.0	+0.37/–0.41
2350		2.0	+0.37/–0.41
2450		2.0	+0.37/–0.41
2550		2.0	+0.37/–0.41
2650		2.0	+0.37/–0.41
2750		2.0	+0.37/–0.41
2850		2.0	+0.37/–0.41
2900		2.0	+0.37/–0.41

ManualsPlus.com

Table 10-77 Frequency Response, Band 1

Column 1 Frequency (GHz)	Column 2 Agilent 8902A Reading (dB)	Column 3 Cal Factor Frequency (GHz)	Column 4 Measurement Uncertainty (dB)
2.95		2.0	+0.49/–0.55
3.05		4.0	+0.49/–0.55
3.15		4.0	+0.49/–0.55
3.25		4.0	+0.49/–0.55
3.35		4.0	+0.49/–0.55
3.45		4.0	+0.49/–0.55
3.55		4.0	+0.49/–0.55
3.65		4.0	+0.49/–0.55
3.75		4.0	+0.49/–0.55
3.85		4.0	+0.49/–0.55
3.95		4.0	+0.49/–0.55
4.05		4.0	+0.49/–0.55
4.15		4.0	+0.49/–0.55
4.25		4.0	+0.49/–0.55
4.35		4.0	+0.49/–0.55
4.45		4.0	+0.49/–0.55
4.55		4.0	+0.49/–0.55
4.65		4.0	+0.49/–0.55
4.75		4.0	+0.49/–0.55
4.85		4.0	+0.49/–0.55
4.95		4.0	+0.49/–0.55
5.05		6.0	+0.49/–0.55
5.15		6.0	+0.49/–0.55
5.25		6.0	+0.49/–0.55
5.35		6.0	+0.49/–0.55
5.45		6.0	+0.49/–0.55
5.55		6.0	+0.49/–0.55
5.65		6.0	+0.49/–0.55
5.75		6.0	+0.49/–0.55
5.85		6.0	+0.49/–0.55
5.95		6.0	+0.49/–0.55
6.05		6.0	+0.49/–0.55
6.15		6.0	+0.49/–0.55
6.25		6.0	+0.49/–0.55
6.35		6.0	+0.49/–0.55
6.45		6.0	+0.49/–0.55

ManualsPlus.com

Table 10-78 Frequency Response, Band 2

Column 1 Frequency (GHz)	Column 2 Agilent 8902A Reading (dB)	Column 3 Cal Factor Frequency (GHz)	Column 4 Measurement Uncertainty (dB)
6.5		6.0	+0.49/–0.56
6.7		6.0	+0.49/–0.56
6.9		6.0	+0.49/–0.56
7.1		8.0	+0.49/–0.56
7.3		8.0	+0.49/–0.56
7.5		8.0	+0.49/–0.56
7.7		8.0	+0.49/–0.56
7.9		8.0	+0.49/–0.56
8.1		8.0	+0.49/–0.56
8.3		8.0	+0.49/–0.56
8.5		8.0	+0.49/–0.56
8.7		8.0	+0.49/–0.56
8.9		8.0	+0.49/–0.56
9.1		10.0	+0.49/–0.56
9.3		10.0	+0.49/–0.56
9.5		10.0	+0.49/–0.56
9.7		10.0	+0.49/–0.56
9.9		10.0	+0.49/–0.56
10.1		10.0	+0.49/–0.56
10.3		10.0	+0.49/–0.56
10.5		10.0	+0.49/–0.56
10.7		10.0	+0.49/–0.56
10.9		10.0	+0.49/–0.56
11.1		12.0	+0.49/–0.56
11.3		12.0	+0.49/–0.56
11.5		12.0	+0.49/–0.56
11.7		12.0	+0.49/–0.56
11.9		12.0	+0.49/–0.56
12.1		12.0	+0.49/–0.56
12.3		12.0	+0.49/–0.56
12.5		12.0	+0.49/–0.56
12.7		12.0	+0.49/–0.56
12.9		12.0	+0.49/–0.56
13.1		14.0	+0.49/–0.56
13.2		14.0	+0.49/–0.56

ManualsPlus.com

Table 10-79 Frequency Response, Band 3

Column 1 Frequency (GHz)	Column 2 Agilent 8902A Reading (dB)	Column 3 Cal Factor Frequency (GHz)	Column 4 Measurement Uncertainty (dB)
13.25		14.0	+0.53/–0.60
13.4		14.0	+0.53/–0.60
13.6		14.0	+0.53/–0.60
13.8		14.0	+0.53/–0.60
14.0		14.0	+0.53/–0.60
14.2		14.0	+0.53/–0.60
14.4		14.0	+0.53/–0.60
14.6		14.0	+0.53/–0.60
14.8		14.0	+0.53/–0.60
15.0		14.0	+0.53/–0.60
15.2		16.0	+0.53/–0.60
15.4		16.0	+0.53/–0.60
15.6		16.0	+0.53/–0.60
15.8		16.0	+0.53/–0.60
16.0		16.0	+0.53/–0.60
16.2		16.0	+0.53/–0.60
16.4		16.0	+0.53/–0.60
16.6		16.0	+0.53/–0.60
16.8		16.0	+0.53/–0.60
17.0		16.0	+0.53/–0.60
17.2		18.0	+0.53/–0.60
17.4		18.0	+0.53/–0.60
17.6		18.0	+0.53/–0.60
17.8		18.0	+0.53/–0.60
18.0		18.0	+0.53/–0.60
18.2		18.0	+0.53/–0.60
18.4		18.0	+0.53/–0.60
18.6		18.0	+0.53/–0.60
18.8		18.0	+0.53/–0.60
19.0		18.0	+0.53/–0.60
19.2		20.0	+0.53/–0.60
19.4		20.0	+0.53/–0.60
19.6		20.0	+0.53/–0.60
19.8		20.0	+0.53/–0.60
20.0		20.0	+0.53/–0.60
20.2		20.0	+0.53/–0.60
20.4		20.0	+0.53/–0.60

ManualsPlus.com

Table 10-79 Frequency Response, Band 3 (Continued)

Column 1 Frequency (GHz)	Column 2 Agilent 8902A Reading (dB)	Column 3 Cal Factor Frequency (GHz)	Column 4 Measurement Uncertainty (dB)
20.6		20.0	+0.53/–0.60
20.8		20.0	+0.53/–0.60
21.0		20.0	+0.53/–0.60
21.2		21.0	+0.53/–0.60
21.4		21.0	+0.53/–0.60
21.6		21.0	+0.53/–0.60
21.8		21.0	+0.53/–0.60
22.0		22.0	+0.53/–0.60
22.2		22.0	+0.53/–0.60
22.4		22.0	+0.53/–0.60
22.6		22.0	+0.53/–0.60
22.8		22.0	+0.53/–0.60
23.0		22.0	+0.53/–0.60
23.2		24.0	+0.53/–0.60
23.4		24.0	+0.53/–0.60
23.6		24.0	+0.53/–0.60
23.8		24.0	+0.53/–0.60
24.0		24.0	+0.53/–0.60
24.2		24.0	+0.53/–0.60
24.4		24.0	+0.53/–0.60
24.6		24.0	+0.53/–0.60
24.8		24.0	+0.53/–0.60
25.0		24.0	+0.53/–0.60
25.2		26.0	+0.53/–0.60
25.4		26.0	+0.53/–0.60
25.6		26.0	+0.53/–0.60
25.8		26.0	+0.53/–0.60
26.0		26.0	+0.53/–0.60
26.2		26.0	+0.53/–0.60
26.4		26.5	+0.53/–0.60
26.6		26.5	+0.53/–0.60
26.8		27.0	+0.53/–0.60

ManualsPlus.com

Table 10-80 Frequency Response, Band 4

Column 1 Frequency (GHz)	Column 2 Agilent 8902A Reading (dB)	Column 3 Cal Factor Frequency (GHz)	Column 4 Measurement Uncertainty (dB)
26.9		27.0	+0.74/–0.89
27.2		27.0	+0.74/–0.89
27.5		28.0	+0.74/–0.89
27.8		28.0	+0.74/–0.89
28.1		28.0	+0.74/–0.89
28.4		28.0	+0.74/–0.89
28.7		29.0	+0.74/–0.89
29.0		29.0	+0.74/–0.89
29.3		29.0	+0.74/–0.89
29.6		30.0	+0.74/–0.89
29.9		30.0	+0.74/–0.89
30.2		30.0	+0.74/–0.89
30.5		31.0	+0.74/–0.89
30.8		31.0	+0.74/–0.89
31.1		31.0	+0.74/–0.89

ManualsPlus.com

Table 10-81 Frequency Response, Band 5

Column 1 Frequency (GHz)	Column 2 Agilent 8902A Reading (dB)	Column 3 Cal Factor Frequency (GHz)	Column 4 Measurement Uncertainty (dB)
31.2		31.0	+0.74/–0.89
31.6		32.0	+0.74/–0.89
32.0		32.0	+0.74/–0.89
32.4		32.0	+0.74/–0.89
32.8		33.0	+0.74/–0.89
33.2		33.0	+0.74/–0.89
33.6		34.0	+0.74/–0.89
34.0		34.0	+0.74/–0.89
34.4		34.0	+0.74/–0.89
34.8		35.0	+0.74/–0.89
35.2		35.0	+0.74/–0.89
35.6		36.0	+0.74/–0.89
36.0		36.0	+0.74/–0.89
36.4		36.0	+0.74/–0.89
36.8		37.0	+0.74/–0.89
37.2		37.0	+0.74/–0.89
37.6		38.0	+0.74/–0.89
38.0		38.0	+0.74/–0.89
38.4		38.0	+0.74/–0.89
38.8		39.0	+0.74/–0.89
39.2		39.0	+0.74/–0.89
39.6		40.0	+0.74/–0.89
40.0		40.0	+0.74/–0.89

ManualsPlus.com

Table 10-82 Frequency Response, Band 0 (<50 MHz)

Column 1 Frequency	Column 2 Agilent 3335A Amplitude (dBm)	Column 3 Response Relative to 50 MHz	Column 4 Response Relative to 300 MHz	Column 5 Measurement Uncertainty (dB)
50 MHz		0 (Ref.)		+0.27/–0.28
20 MHz				+0.27/–0.28
10 MHz				+0.27/–0.28
1 MHz				+0.27/–0.28
100 kHz				+0.27/–0.28
9 kHz				+0.27/–0.28
1 kHz*				+0.27/–0.28
500 Hz*				+0.27/–0.28
200 Hz*				+0.27/–0.28
*These measurements apply only to analyzers equipped with Option 006.				

ManualsPlus.com

Table 10-83 Band Switching Uncertainty

	Band 0 Step 65c _____	**Band 1 Step 66** _____	**Band 2 Step 67a** _____	**Band 3 <22 GHz Step 68a** _____	**Band 3 >22 GHz Step 69a** _____	**Band 4 Step 71a** _____	**Band 5 Step 72a** _____
Band 0 Step 65f _____	N/A	_____	_____	_____	_____	_____	_____
Band 1 Step 66b _____	_____	N/A	_____	_____	_____	_____	_____
Band 2 Step 67b _____	_____	_____	N/A	_____	_____	_____	_____
Band 3 <22 GHz Step 68b _____	_____	_____	_____	N/A	_____	_____	_____
Band 3 >22 GHz Step 69b _____	_____	_____	_____	_____	N/A	_____	_____
Band 4 Step 71b _____	_____	_____	_____	_____	_____	N/A	_____
Band 5 Step 72b _____	_____	_____	_____	_____	_____	_____	N/A

ManualsPlus.com

41. Frequency Response: Agilent 8565E/EC

Instrument Under Test

Agilent 8565E/EC

Related Specification

Relative Frequency Response
Absolute Frequency Response
Band Switching Uncertainty

Related Adjustment

RYTHM Adjustment
Frequency Response Adjustment
LO Distribution Amplifier Adjustment
SBTX Adjustment

Description

The output of the synthesized sweeper is fed through a power splitter to a power sensor, then to the spectrum analyzer. The synthesized sweeper power level is adjusted at 300 MHz to place the displayed signal at the center horizontal graticule line of the spectrum analyzer. The measuring receiver, used as a power meter, is placed in RATIO mode. At each new synthesized sweeper frequency and spectrum analyzer center frequency, the sweeper power level is adjusted to place the signal at the center horizontal graticule line. The measuring receiver displays the inverse of the frequency response relative to the calibrator.

Equipment

Measuring receiver . . . . . Agilent 8902A

Synthesized sweeper . . . . . Agilent 83650A

Synthesizer/level generator . . . . . Agilent 3335A

Power sensor. . . . . Agilent 8487A

Power splitter . . . . . Agilent 11667C

Coaxial 50 Ω termination . . . . . Agilent 85138B

ManualsPlus.com

Adapters

Type N (f) to 2.4 mm (m). . . . . Agilent 11903C

Type N (m) to BNC (f). 1250-1476

Cables

BNC, 122 cm (48 in.) *(2 required)*. . . . . Agilent 10503A

2.4 mm, 91 cm (36 in.). 8120-6164

Figure 10-50 Frequency Response Test Setup, 50 MHz to 50 GHz

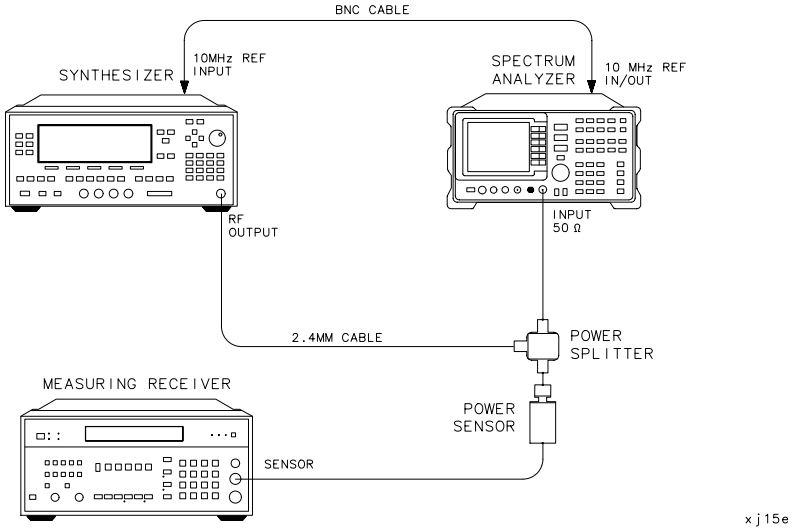

Figure 10-51 Frequency Response Test Setup, <50 MHz

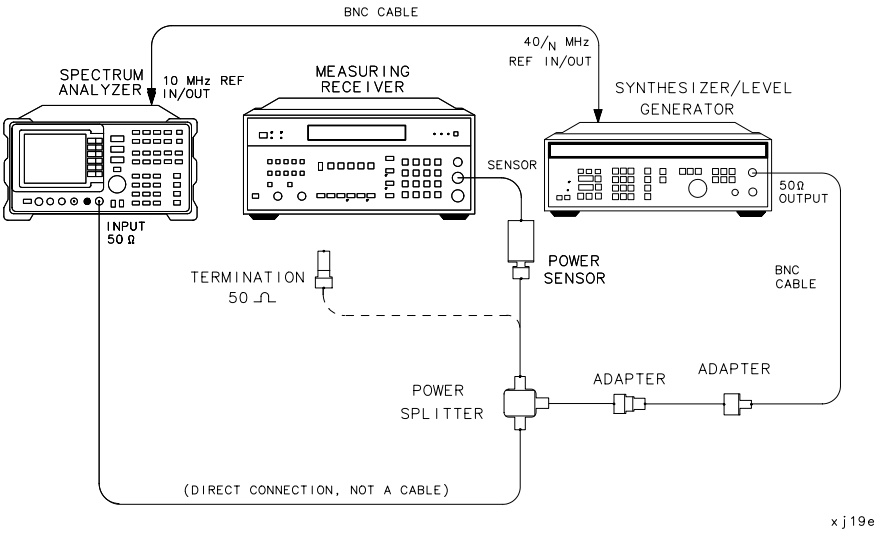

ManualsPlus.com

Procedure

1. Zero and calibrate the Agilent 8902A and the Agilent 8487A in LOG mode, as described in the Agilent 8902A Operation Manual. Enter the power sensor 300 MHz calibration factor into the Agilent 8902A.
2. Connect the equipment as shown in Figure 10-50.
3. On the Agilent 83650A, press **PRESET**. Set the controls as follows:

   CW frequency . . . . . 300 MHz

   Frequency step . . . . . 100 MHz

   Power level . . . . . –4 dBm

4. On the spectrum analyzer, press **PRESET**. Press **RECALL**, **MORE 1 OF 2**, **FACTORY PRSEL PK**. Set the spectrum analyzer controls as follows:

   Center frequency . . . . . 300 MHz

   Center frequency step . . . . . 100 MHz

   Span . . . . . 0 Hz

   Reference level. . . . . –5 dBm

   dB/division . . . . . 1 dB

   Resolution BW . . . . . 300 kHz

5. On the spectrum analyzer, press **MKR**.
6. On the Agilent 83650A, adjust the power level for a MKR amplitude of –10 dBm ±0.05 dB.
7. Press **RATIO** on the Agilent 8902A.

Frequency Response, Band 0 (≥50 MHz)

8. Set the Agilent 83650A CW to 50 MHz.
9. On the spectrum analyzer, press **FREQUENCY**, **CENTER FREQ**, 50, **MHz**.
10. On the Agilent 83650A, adjust the power level for a spectrum analyzer MKR amplitude reading of –10 dBm ±0.05 dB.
11. Record the negative of the power ratio displayed on the Agilent 8902A in Table 10-84, column 2. Record the power ratio here:

    Agilent 8902A reading at 50 MHz _____ dB

12. Set the Agilent 83650A CW to 150 MHz.

ManualsPlus.com

13. On the spectrum analyzer, press **FREQUENCY, CENTER FREQ**, 150, **MHz**.
14. On the Agilent 83650A, adjust the power level for a spectrum analyzer MKR amplitude reading of –10 dBm ±0.05 dB.
15. Record the negative of the power ratio displayed on the Agilent 8902A, in Table 10-84, column 2.
16. On the Agilent 83650A, press **CW**, ⇑.
17. On the spectrum analyzer, press **FREQUENCY,** ⇑ to step through the remaining frequencies listed in Table 10-84. At each new frequency, repeat steps 14 through 16, entering the power sensor calibration factors indicated in Table 10-84 into the Agilent 8902A.

NOTE It will be necessary to enter the last synthesized sweeper and spectrum analyzer frequency, 2.9 GHz, manually; the step functions will set the frequency to 2.95 GHz.

Frequency Response, Band 1

18. On the spectrum analyzer, press **FREQUENCY**, 2.95, **GHz**.
19. Set the Agilent 83650A CW to 2.95 GHz.
20. Press **AUX CTRL**, **INTERNAL MIXER, PRESEL AUTO PEAK**. Wait for the `PEAKING!` message to disappear.
21. On the Agilent 83650A, adjust the power level for a spectrum analyzer MKR amplitude reading of –10 dBm ±0.05 dB.
22. Record the negative of the power ratio displayed on the Agilent 8902A in Table 10-85, column 2.
23. On the Agilent 83650A, press **CW,** ⇑.
24. On the spectrum analyzer, press **FREQUENCY,** ⇑ to step through the remaining frequencies listed in Table 10-85. At each new frequency, repeat steps 20 through 23, entering the power sensor calibration factors indicated in Table 10-85 into the Agilent 8902A.

Frequency Response, Band 2

25. On the spectrum analyzer, press **FREQUENCY,** 6.5, **GHz**, **CF STEP**, 200, **MHz**.
26. Set the Agilent 83650A CW to 6.5 GHz and the FREQ STEP to 200 MHz.
27. Press **AUX CTRL**, **INTERNAL MIXER, PRESEL AUTO PEAK**. Wait for the `PEAKING!` message to disappear.

ManualsPlus.com

28. On the Agilent 83650A, adjust the power level for a spectrum analyzer MKR amplitude reading of –10 dBm ±0.05 dB.
29. Record the negative of the power ratio displayed on the Agilent 8902A in Table 10-86 as the Agilent 8902A reading.
30. On the Agilent 83650A, press **CW**, ⇑.
31. On the spectrum analyzer, press **FREQUENCY,** ⇑ to step through the remaining frequencies listed in Table 10-86. At each new frequency, repeat steps 27 through 29, entering the power sensor calibration factors indicated in Table 10-86 into the Agilent 8902A.

NOTE It will be necessary to enter the last synthesized sweeper and spectrum analyzer frequency, 13.2 GHz, manually; the step functions will set the frequency to 13.3 GHz.

Frequency Response, Band 3

32. On the spectrum analyzer, press **FREQUENCY,** 13.25, **GHz**.
33. Set the Agilent 83650A CW to 13.25 GHz.
34. Press **AUX CTRL, INTERNAL MIXER**, **PRESEL AUTO PEAK**. Wait for the `PEAKING!` message to disappear.
35. On the Agilent 83650A, adjust the power level for a spectrum analyzer MKR amplitude reading of –10 dBm ±0.05 dB.
36. Record the negative of the power ratio displayed on the Agilent 8902A in Table 10-87 as the Agilent 8902A reading.
37. Set the Agilent 83650A CW and spectrum analyzer CENTER FREQ to 13.4 GHz. Repeat steps 34 through 36.
38. On the Agilent 83650A, press **CW,** ⇑.
39. On the spectrum analyzer, press **FREQUENCY,** ⇑ to step through the remaining frequencies listed in Table 10-87. At each new frequency, repeat steps 34 through 39, skipping step 37, entering the power sensor calibration factors indicated in Table 10-87 into the Agilent 8902A.

Frequency Response, Band 4

40. On the spectrum analyzer, press **FREQUENCY**, 26.9, **GHz**, **CF STEP**, 300, **MHz**.
41. Set the Agilent 83650A CW to 26.9 GHz and the FREQ STEP to 300 MHz.
42. Press **AUX CTRL, INTERNAL MIXER, PRESEL AUTO PEAK**. Wait for the

ManualsPlus.com

PEAKING! message to disappear.

43. On the Agilent 83650A, adjust the power level for a spectrum analyzer MKR amplitude reading of –10 dBm±0.05 dB.

44. Record the negative of the power ratio displayed on the Agilent 8902A in Table 10-88 as the Agilent 8902A reading.

45. On the Agilent 83650A, press **CW**, ⇑.

46. On the spectrum analyzer, press **FREQUENCY,** ⇑ to step through the remaining frequencies listed in Table 10-88. At each new frequency, repeat steps 42 through 45, entering the power sensor calibration factors indicated in Table 10-88 into the Agilent 8902A.

Frequency Response, Band 5

47. On the spectrum analyzer, press **FREQUENCY**, 31.2, **GHz**, **CF STEP**, 400, **MHz**.

48. Set the Agilent 83650A CW to 31.20 GHz and the FREQ STEP to 400 MHz.

49. Press **AUX CTRL, INTERNAL MIXER**, **PRESEL AUTO PEAK**. Wait for the PEAKING! message to disappear.

50. On the Agilent 83650A, adjust the power level for a spectrum analyzer MKR amplitude reading of –10 dBm ±0.05 dB.

51. Record the negative of the power ratio displayed on the Agilent 8902A in Table 10-89 as the Agilent 8902A reading.

52. On the Agilent 83650A, press **CW,** ⇑.

53. On the spectrum analyzer, press **FREQUENCY,** ⇑.

54. On the spectrum analyzer, press **FREQUENCY,** ⇑ to step through the remaining frequencies listed in Table 10-89. At each new frequency, repeat steps 49 through 53, entering the power sensor calibration factors indicated in Table 10-89 into the Agilent 8902A.

Frequency Response, Band 0 (<50 MHz)

55. Set the spectrum analyzer controls as follows:

Center frequency . . . . . 50 MHz

Span . . . . . 100 Hz

Resolution BW . . . . . 10 Hz

Marker . . . . . off

56. Connect the equipment as shown in Figure 10-51 with the power

ManualsPlus.com

sensor connected to the power splitter.

57. On the Agilent 3335A, set the controls as follows:

    Frequency . . . . . 50 MHz

    Amplitude . . . . . –4 dBm

    Amplitude increment . . . . . .0.01 dB

58. Enter the power sensor 50 MHz calibration factor into the Agilent 8902A.

59. Adjust the Agilent 3335A AMPLITUDE until the Agilent 8902A display reads the same value as recorded in step 11. Record the Agilent 3335A amplitude here, and in Table 10-90:

    Agilent 3335A amplitude (50 MHz):_____ dBm

60. Replace the Agilent 8487A power sensor with the Agilent 85138B 50 Ω termination.

61. On the spectrum analyzer, press **PEAK SEARCH**, **MARKER DELTA**.

62. Set the spectrum analyzer CENTER FREQ and the Agilent 3335A FREQUENCY to the frequencies listed in Table 10-90. Test at frequencies less than 9 kHz only if the analyzer is equipped with Option 006. At each frequency, adjust the Agilent 3335A amplitude for a Δ MKR amplitude reading of 0.00 ±0.05 dB. Record the Agilent 3335A amplitude setting in Table 10-90, column 2, as the Agilent 3335A amplitude.

63. For each of the frequencies listed in Table 10-90, subtract the Agilent 3335A amplitude reading (column 2) from the Agilent 3335A amplitude (50 MHz) recorded in step 59. Record the results as the response relative to 50 MHz in Table 10-90, column 3.

64. Add to each of the “response relative to 50 MHz” entries in Table 10-90 the Agilent 8902A reading for 50 MHz listed in Table 10-84. Record the results as the response relative to 300 MHz, in Table 10-90, column 4.

ManualsPlus.com

Test Results

65. Frequency Response, Band 0

a. Enter the most positive number from Table 10-90, column 4. _____ dB

b. Enter the most positive number from Table 10-84, column 2. _____ dB

c. Of (a) and (b), enter whichever number is *more* positive. _____ dB

d. Enter the most negative number from Table 10-90, column 4. _____ dB

e. Enter the most negative number from Table 10-84, column 2. _____ dB

f. Of (d) and (e), enter whichever number is *more* negative. _____ dB

g. Subtract (f) from (c). _____ dB

66. Frequency Response, Band 1

a. Enter the most positive number from Table 10-85, column 2. _____ dB

b. Enter the most negative number from Table 10-85, column 2. _____ dB

c. Subtract (b) from (a). _____ dB

67. Frequency Response, Band 2

a. Enter the most positive number from Table 10-86, column 2. _____ dB

b. Enter the most negative number from Table 10-86, column 2. _____ dB

c. Subtract (b) from (a). _____ dB

ManualsPlus.com

68. Frequency Response, Band 3, 13.2 GHz to 22 GHz

a. Enter the most positive number from Table 10-87, column 2 for center frequencies less than or equal to 22 GHz. _____ dB

b. Enter the most negative number from Table 10-87, column 2 for center frequencies less than or equal to 22 GHz. _____ dB

c. Subtract (b) from (a). _____ dB

69. Frequency Response, Band 3, 22 GHz to 26.8 GHz

a. Enter the most positive number from Table 10-87, column 2 for center frequencies greater than 22 GHz. _____ dB

b. Enter the most negative number from Table 10-87, column 2 for center frequencies greater than 22 GHz. _____ dB

c. Subtract (b) from (a). _____ dB

70. Frequency Response, Band 3, 13.2 GHz to 26.8 GHz

a. Enter the most positive number from 69 (a) and 70 (a). _____ dB

b. Enter the most negative number from 69 (b) and 70 (b). _____ dB

71. Frequency Response, Band 4

a. Enter the most positive number from Table 10-88, column 2. _____ dB

b. Enter the most negative number from Table 10-88, column 2. _____ dB

c. Subtract (b) from (a). _____ dB

72. Frequency Response, Band 5

a. Enter the most positive number from Table 10-89, column 2. _____ dB

b. Enter the most negative number from Table 10-89, column 2. _____ dB

c. Subtract (b) from (a). _____ dB

ManualsPlus.com

Frequency Response, Band 0, 100 MHz to 2.0 GHz

73. This step applies only to spectrum analyzers with serial number prefix 3641A or later. Enter the results of the frequency response, Band 0, for the frequency range 100 MHz to 2.0 GHz:

a. Enter the most positive number from Table 10-84, column 2, for center frequencies between 100 MHz and 2.0 GHz. _____ dB

b. Enter the most negative number from Table 10-84, column 2, for center frequencies between 100 MHz and 2.0 GHz. _____ dB

c. Subtract (b) from (a). _____ dB

Band Switching Uncertainty

74. In the top row of Table 10-91, enter the values recorded in the indicated steps. For example, if step 68 (a) has a value of 1.22 dB, enter “1.22 dB” in the top row of the Band 3 column.

75. In the left column of Table 10-91, enter the values recorded in the indicated steps. For example, if step 67 (b) has a value of –0.95 dB, enter “–0.95 dB” in the left column of the Band 2 row.

76. Compute the other entries in Table 10-91 by taking the absolute value of the difference between the values in the left column and the top row.

ManualsPlus.com

Table 10-84 Frequency Response, Band 0 (≥50 MHz)

Column 1 Frequency (MHz)	Column 2 Agilent 8902A Reading (dB)	Column 3 Cal Factor Frequency (GHz)	Column 4 Measurement Uncertainty (dB)
50		0.05	+0.37/–0.41
150		0.05	+0.37/–0.41
250		0.05	+0.37/–0.41
350		0.05	+0.37/–0.41
450		0.05	+0.37/–0.41
550		0.05	+0.37/–0.41
650		0.05	+0.37/–0.41
750		0.05	+0.37/–0.41
850		0.05	+0.37/–0.41
950		0.05	+0.37/–0.41
1050		0.05	+0.37/–0.41
1150		2.0	+0.37/–0.41
1250		2.0	+0.37/–0.41
1350		2.0	+0.37/–0.41
1450		2.0	+0.37/–0.41
1550		2.0	+0.37/–0.41
1650		2.0	+0.37/–0.41
1750		2.0	+0.37/–0.41
1850		2.0	+0.37/–0.41
1950		2.0	+0.37/–0.41
2050		2.0	+0.37/–0.41
2150		2.0	+0.37/–0.41
2250		2.0	+0.37/–0.41
2350		2.0	+0.37/–0.41
2450		2.0	+0.37/–0.41
2550		2.0	+0.37/–0.41
2650		2.0	+0.37/–0.41
2750		2.0	+0.37/–0.41
2850		2.0	+0.37/–0.41
2900		2.0	+0.37/–0.41

ManualsPlus.com

Table 10-85 Frequency Response, Band 1

Column 1 Frequency (GHz)	Column 2 Agilent 8902A Reading (dB)	Column 3 Cal Factor Frequency (GHz)	Column 4 Measurement Uncertainty (dB)
2.95		2.0	+0.49/–0.55
3.05		4.0	+0.49/–0.55
3.15		4.0	+0.49/–0.55
3.25		4.0	+0.49/–0.55
3.35		4.0	+0.49/–0.55
3.45		4.0	+0.49/–0.55
3.55		4.0	+0.49/–0.55
3.65		4.0	+0.49/–0.55
3.75		4.0	+0.49/–0.55
3.85		4.0	+0.49/–0.55
3.95		4.0	+0.49/–0.55
4.05		4.0	+0.49/–0.55
4.15		4.0	+0.49/–0.55
4.25		4.0	+0.49/–0.55
4.35		4.0	+0.49/–0.55
4.45		4.0	+0.49/–0.55
4.55		4.0	+0.49/–0.55
4.65		4.0	+0.49/–0.55
4.75		4.0	+0.49/–0.55
4.85		4.0	+0.49/–0.55
4.95		4.0	+0.49/–0.55
5.05		6.0	+0.49/–0.55
5.15		6.0	+0.49/–0.55
5.25		6.0	+0.49/–0.55
5.35		6.0	+0.49/–0.55
5.45		6.0	+0.49/–0.55
5.55		6.0	+0.49/–0.55
5.65		6.0	+0.49/–0.55
5.75		6.0	+0.49/–0.55
5.85		6.0	+0.49/–0.55
5.95		6.0	+0.49/–0.55
6.05		6.0	+0.49/–0.55
6.15		6.0	+0.49/–0.55
6.25		6.0	+0.49/–0.55
6.35		6.0	+0.49/–0.55
6.45		6.0	+0.49/–0.55

ManualsPlus.com

Table 10-86 Frequency Response, Band 2

Column 1 Frequency (GHz)	Column 2 Agilent 8902A Reading (dB)	Column 3 Cal Factor Frequency (GHz)	Column 4 Measurement Uncertainty (dB)
6.5		6.0	+0.49/–0.56
6.7		6.0	+0.49/–0.56
6.9		6.0	+0.49/–0.56
7.1		8.0	+0.49/–0.56
7.3		8.0	+0.49/–0.56
7.5		8.0	+0.49/–0.56
7.7		8.0	+0.49/–0.56
7.9		8.0	+0.49/–0.56
8.1		8.0	+0.49/–0.56
8.3		8.0	+0.49/–0.56
8.5		8.0	+0.49/–0.56
8.7		8.0	+0.49/–0.56
8.9		8.0	+0.49/–0.56
9.1		10.0	+0.49/–0.56
9.3		10.0	+0.49/–0.56
9.5		10.0	+0.49/–0.56
9.7		10.0	+0.49/–0.56
9.9		10.0	+0.49/–0.56
10.1		10.0	+0.49/–0.56
10.3		10.0	+0.49/–0.56
10.5		10.0	+0.49/–0.56
10.7		10.0	+0.49/–0.56
10.9		10.0	+0.49/–0.56
11.1		12.0	+0.49/–0.56
11.3		12.0	+0.49/–0.56
11.5		12.0	+0.49/–0.56
11.7		12.0	+0.49/–0.56
11.9		12.0	+0.49/–0.56
12.1		12.0	+0.49/–0.56
12.3		12.0	+0.49/–0.56
12.5		12.0	+0.49/–0.56
12.7		12.0	+0.49/–0.56
12.9		12.0	+0.49/–0.56
13.1		14.0	+0.49/–0.56
13.2		14.0	+0.49/–0.56

ManualsPlus.com

Table 10-87 Frequency Response, Band 3

Column 1 Frequency (GHz)	Column 2 Agilent 8902A Reading (dB)	Column 3 Cal Factor Frequency (GHz)	Column 4 Measurement Uncertainty (dB)
13.25		14.0	+0.53/–0.60
13.4		14.0	+0.53/–0.60
13.6		14.0	+0.53/–0.60
13.8		14.0	+0.53/–0.60
14.0		14.0	+0.53/–0.60
14.2		14.0	+0.53/–0.60
14.4		14.0	+0.53/–0.60
14.6		14.0	+0.53/–0.60
14.8		14.0	+0.53/–0.60
15.0		14.0	+0.53/–0.60
15.2		16.0	+0.53/–0.60
15.4		16.0	+0.53/–0.60
15.6		16.0	+0.53/–0.60
15.8		16.0	+0.53/–0.60
16.0		16.0	+0.53/–0.60
16.2		16.0	+0.53/–0.60
16.4		16.0	+0.53/–0.60
16.6		16.0	+0.53/–0.60
16.8		16.0	+0.53/–0.60
17.0		16.0	+0.53/–0.60
17.2		18.0	+0.53/–0.60
17.4		18.0	+0.53/–0.60
17.6		18.0	+0.53/–0.60
17.8		18.0	+0.53/–0.60
18.0		18.0	+0.53/–0.60
18.2		18.0	+0.53/–0.60
18.4		18.0	+0.53/–0.60
18.6		18.0	+0.53/–0.60
18.8		18.0	+0.53/–0.60
19.0		18.0	+0.53/–0.60
19.2		20.0	+0.53/–0.60
19.4		20.0	+0.53/–0.60
19.6		20.0	+0.53/–0.60
19.8		20.0	+0.53/–0.60
20.0		20.0	+0.53/–0.60
20.2		20.0	+0.53/–0.60
20.4		20.0	+0.53/–0.60

ManualsPlus.com

Table 10-87 Frequency Response, Band 3 (Continued)

Column 1 Frequency (GHz)	Column 2 Agilent 8902A Reading (dB)	Column 3 Cal Factor Frequency (GHz)	Column 4 Measurement Uncertainty (dB)
20.6		20.0	+0.53/–0.60
20.8		20.0	+0.53/–0.60
21.0		20.0	+0.53/–0.60
21.2		21.0	+0.53/–0.60
21.4		21.0	+0.53/–0.60
21.6		21.0	+0.53/–0.60
21.8		21.0	+0.53/–0.60
22.0		22.0	+0.53/–0.60
22.2		22.0	+0.53/–0.60
22.4		22.0	+0.53/–0.60
22.6		22.0	+0.53/–0.60
22.8		22.0	+0.53/–0.60
23.0		22.0	+0.53/–0.60
23.2		24.0	+0.53/–0.60
23.4		24.0	+0.53/–0.60
23.6		24.0	+0.53/–0.60
23.8		24.0	+0.53/–0.60
24.0		24.0	+0.53/–0.60
24.2		24.0	+0.53/–0.60
24.4		24.0	+0.53/–0.60
24.6		24.0	+0.53/–0.60
24.8		24.0	+0.53/–0.60
25.0		24.0	+0.53/–0.60
25.2		26.0	+0.53/–0.60
25.4		26.0	+0.53/–0.60
25.6		26.0	+0.53/–0.60
25.8		26.0	+0.53/–0.60
26.0		26.0	+0.53/–0.60
26.2		26.0	+0.53/–0.60
26.4		26.5	+0.53/–0.60
26.6		26.5	+0.53/–0.60
26.8		27.0	+0.53/–0.60

ManualsPlus.com

Table 10-88 Frequency Response, Band 4

Column 1 Frequency (GHz)	Column 2 Agilent 8902A Reading (dB)	Column 3 Cal Factor Frequency (GHz)	Column 4 Measurement Uncertainty (dB)
26.9		27.0	+0.74/–0.89
27.2		27.0	+0.74/–0.89
27.5		28.0	+0.74/–0.89
27.8		28.0	+0.74/–0.89
28.1		28.0	+0.74/–0.89
28.4		28.0	+0.74/–0.89
28.7		29.0	+0.74/–0.89
29.0		29.0	+0.74/–0.89
29.3		29.0	+0.74/–0.89
29.6		30.0	+0.74/–0.89
29.9		30.0	+0.74/–0.89
30.2		30.0	+0.74/–0.89
30.5		31.0	+0.74/–0.89
30.8		31.0	+0.74/–0.89
31.1		31.0	+0.74/–0.89

ManualsPlus.com

Table 10-89 Frequency Response, Band 5

Column 1 Frequency (GHz)	Column 2 Agilent 8902A Reading (dB)	Column 3 Cal Factor Frequency (GHz)	Column 4 Measurement Uncertainty (dB)
31.2		31.0	+0.74/–0.89
31.6		32.0	+0.74/–0.89
32.0		32.0	+0.74/–0.89
32.4		32.0	+0.74/–0.89
32.8		33.0	+0.74/–0.89
33.2		33.0	+0.74/–0.89
33.6		34.0	+0.74/–0.89
34.0		34.0	+0.74/–0.89
34.4		34.0	+0.74/–0.89
34.8		35.0	+0.74/–0.89
35.2		35.0	+0.74/–0.89
35.6		36.0	+0.74/–0.89
36.0		36.0	+0.74/–0.89
36.4		36.0	+0.74/–0.89
36.8		37.0	+0.74/–0.89
37.2		37.0	+0.74/–0.89
37.6		38.0	+0.74/–0.89
38.0		38.0	+0.74/–0.89
38.4		38.0	+0.74/–0.89
38.8		39.0	+0.74/–0.89
39.2		39.0	+0.74/–0.89
39.6		40.0	+0.74/–0.89
40.0		40.0	+0.74/–0.89
40.4		40.0	+0.74/–0.89
40.8		41.0	+0.74/–0.89
41.2		41.0	+0.74/–0.89
41.6		42.0	+0.74/–0.89

ManualsPlus.com

Table 10-89 Frequency Response, Band 5 (Continued)

Column 1 Frequency (GHz)	Column 2 Agilent 8902A Reading (dB)	Column 3 Cal Factor Frequency (GHz)	Column 4 Measurement Uncertainty (dB)
42.0		42.0	+0.74/–0.89
42.4		42.0	+0.91/–1.16
42.8		43.0	+0.91/–1.16
43.2		43.0	+0.91/–1.16
43.6		44.0	+0.91/–1.16
44.0		44.0	+0.91/–1.16
44.4		44.0	+0.91/–1.16
44.8		45.0	+0.91/–1.16
45.2		45.0	+0.91/–1.16
45.6		46.0	+0.91/–1.16
46.0		46.0	+0.91/–1.16
46.4		46.0	+0.91/–1.16
46.8		47.0	+0.91/–1.16
47.2		47.0	+0.91/–1.16
47.6		48.0	+0.91/–1.16
48.0		48.0	+0.91/–1.16
48.4		48.0	+0.91/–1.16
48.8		49.0	+0.91/–1.16
49.2		49.0	+0.91/–1.16
49.6		50.0	+0.91/–1.16
50.0		50.0	+0.91/–1.16

ManualsPlus.com

Table 10-90 Frequency Response, Band 0 (<50 MHz)

Column 1 Frequency	Column 2 Agilent 3335A Amplitude (dBm)	Column 3 Response Relative to 50 MHz	Column 4 Response Relative to 300 MHz	Column 5 Measurement Uncertainty (dB)
50 MHz		0 (Ref.)		+0.27/–0.28
20 MHz				+0.27/–0.28
10 MHz				+0.27/–0.28
1 MHz				+0.27/–0.28
100 kHz				+0.27/–0.28
9 kHz				+0.27/–0.28
1 kHz*				+0.27/–0.28
500 Hz*				+0.27/–0.28
200 Hz*				+0.27/–0.28
*These measurements apply only to analyzers equipped with Option 006.				

ManualsPlus.com

Table 10-91 Band Switching Uncertainty

	Band 0 Step 65c _____	**Band 1 Step 66a** _____	**Band 2 Step 67a** _____	**Band 3 <22 GHz Step 68a** _____	**Band 3 >22 GHz Step 69a** _____	**Band 4 Step 71a** _____	**Band 5 Step 72a** _____
Band 0 Step 65f _____	N/A	_____	_____	_____	_____	_____	_____
Band 1 Step 66b _____	_____	N/A	_____	_____	_____	_____	_____
Band 2 Step 67b _____	_____	_____	N/A	_____	_____	_____	_____
Band 3 <22 GHz Step 68b _____	_____	_____	_____	N/A	_____	_____	_____
Band 3 >22 GHz Step 69b _____	_____	_____	_____	_____	N/A	_____	_____
Band 4 Step 71b _____	_____	_____	_____	_____	_____	N/A	_____
Band 5 Step 72b _____	_____	_____	_____	_____	_____	_____	N/A

ManualsPlus.com

42. Frequency Span Accuracy

Instrument Under Test

8560 E-Series and EC-Series

Related Specification

Frequency Span Accuracy

Related Adjustment

YTO Adjustment

Description

The spectrum analyzer CAL OUTPUT and a synthesized sweeper provide two input signals of known frequencies to the input of the spectrum analyzer. The synthesized sweeper signal is locked to the spectrum analyzer. The marker functions are used to measure the separation between the two signals. The percent error between the measured frequency separation and the span is calculated and recorded.

Figure 10-52 Frequency Span Accuracy Test Setup

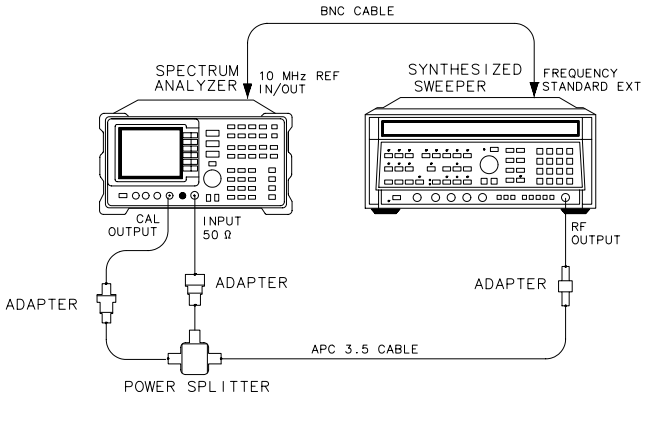

Equipment

Synthesized sweeper . . . . . .Agilent 8340A/B

Power splitter . . . . . Agilent 11667B

ManualsPlus.com

Adapters

Type N (m) to APC 3.5 (m) 1250-1743

APC 3.5 (f) to APC 3.5 (f) 5061-5311

BNC (f) to SMA (m). 1250-1200

Type N (f) to 2.4 mm (m). . . . . Agilent 11903B

(for Agilent 8564E/EC and Agilent 8565E/EC)

Cables

BNC, 122 cm (48 in.) *(2 required)*. . . . . Agilent 10503A

APC 3.5, 91 cm (36 in.) 8120-4921

Procedure

1. Connect the equipment as shown in Figure 10-52. The spectrum analyzer provides the frequency reference for the synthesized sweeper.
2. Press **INSTR PRESET** on the synthesized sweeper, then set the controls as follows:

   CW frequency . . . . . 300.0008 MHz

   Power level . . . . . .–15 dBm

   RF power. . . . . on

   Frequency standard switch (rear panel). . . . . .EXT

3. Press **PRESET** on the spectrum analyzer, then set the controls as follows:

   Center frequency . . . . . 300.0004 MHz

   Span . . . . . 1 kHz

   Reference level . . . . . .–10 dBm

4. On the spectrum analyzer, press **SGL SWP** and wait for the completion of a new sweep, then press **PEAK SEARCH**, **MARKER DELTA, NEXT PEAK**. The active and anchor markers should be on the signals near the second and tenth graticule lines (the left most graticule is the first graticule line on the display).
5. Record the Δ MKR frequency displayed on the spectrum analyzer in Table 10-92.
6. Calculate the span accuracy as shown below and record the result in Table 10-92.

ManualsPlus.com

Span accuracy = 100 × (ΔMKR frequency – (0.8 × SPAN))/ (0.8 × Span)

7. On the spectrum analyzer, press **MKR, MARKERS OFF**.
8. Repeat steps 4 through 7 for the remaining spectrum analyzer SPAN and CENTER FREQ and Agilent 8340A/B CW settings listed in Table 10-92.

Table 10-92 Frequency Span Accuracy

Agilent 8340A/B Frequency (MHz)	Spectrum Analyzer Center Frequency (MHz)	Spectrum Analyzer Span	Δ MKR Frequency	Span Accuracy (%)	Measurement Uncertainty (%)
300.0008	300.0004	1 kHz			±0.24
300.0016	300.0008	2 kHz			±0.24
300.004	300.002	5 kHz			±0.24
300.008	300.004	10 kHz			±0.24
300.016	300.008	20 kHz			±0.24
300.04	300.02	50 kHz			±0.24
300.08	300.04	100 kHz			±0.24
300.16	300.08	200 kHz			±0.24
300.4	300.2	500 kHz			±0.24
300.8	300.4	1 MHz			±0.24
301.6	300.8	2 MHz			±0.24
304.0	302.0	5 MHz			±0.24
308.0	304.0	10 MHz			±0.24
316.0	308.0	20 MHz			±0.24
340.0	320.0	50 MHz			±0.24
380.0	340.0	100 MHz			±0.24
460.0	380.0	200 MHz			±0.24
700.0	500.0	500 MHz			±0.24
1100.0	700.0	1 GHz			±0.24
1900.0	1100.0	2 GHz			±0.24

ManualsPlus.com

43. Third Order Intermodulation Distortion: 8560E/EC

Instrument Under Test

8560E/EC

Related Specification

Third Order Intermodulation Distortion

Related Adjustment

1st LO Distribution Amplifier Adjustment

Description

Two synthesized sources provide the signals required for measuring third order intermodulation distortion. A filter is used to attenuate the second harmonic of the signal closest to the distortion product being measured. The spectrum analyzer provides the 10 MHz reference for the synthesized sources.

Figure 10-53 Third Order Intermodulation Test Setup

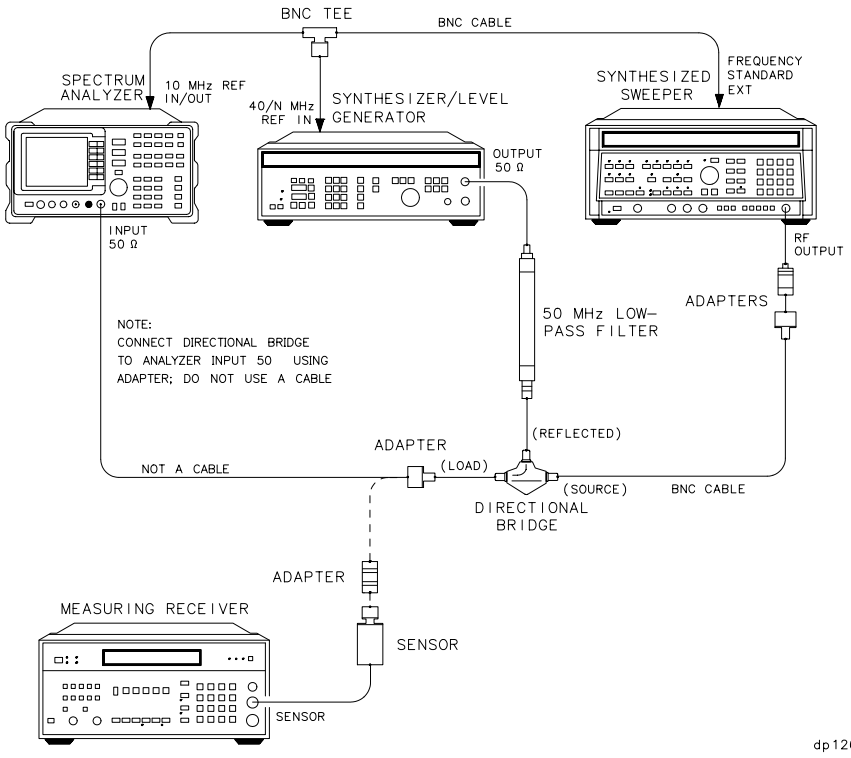

ManualsPlus.com

Equipment

Synthesizer/level generator . . . . . Agilent 3335A

Synthesized sweeper . . . . . .Agilent 8340A/B

Measuring receiver . . . . . Agilent 8902A

Power sensor. . . . . Agilent 8482A

Directional bridge. . . . . Agilent 8721A

50 MHz low-pass filter 0955-0306

Adapters

Type N (f) to APC 3.5 (f). 1250-1745

Type N (m) to BNC (m) 1250-1473

Type N (f) to type N (f). 1250-1472

BNC tee (m) (f) (f). 1250-0781

Cable

BNC, 122 cm (48 in.) *(4 required)* . . . . . Agilent 10503A

Procedure

1. Connect the equipment as shown in Figure 10-53, but do not connect the directional bridge to the spectrum analyzer.
2. Set the Agilent 3335A as follows:

   Frequency . . . . . 45 MHz

   Amplitude. . . . . .–14 dB

   Amplitude increment . . . . . .0.05 dB

   Output . . . . . 50 Ω

3. Press **PRESET** on the Agilent 8340A/B and set the controls as follows:

   CW frequency . . . . . .45.05 MHz

   Power level . . . . . .–110 dBm

   Modulation. . . . . .off

   RF power . . . . . .off

   Frequency standard switch (rear panel) . . . . . EXT

ManualsPlus.com

4. On the Agilent 8902A, set the controls as follows:

   FUNCTION . . . . . RF POWER

   LOG/LIN . . . . . LOG

5. Press **PRESET** on the spectrum analyzer. Set the controls as follows:

   Center frequency . . . . . 45.0 MHz

   Center frequency step . . . . . 50 kHz

   Span . . . . . 1 kHz

   Reference level . . . . . –20 dBm

   Resolution BW . . . . . 10 Hz

6. Zero the Agilent 8902A/Agilent 8482A combination and calibrate the Agilent 8482A at 50 MHz as described in the Agilent 8902A Operation Manual.

7. Connect the power sensor to the output of the directional bridge using an adapter; do not use a cable.

8. Press **AMPLITUDE** on the Agilent 3335A and use the INCR keys to adjust the amplitude for a –20 dBm ±0.1 dB reading on the Agilent 8902A display.

9. Disconnect the power sensor from the directional bridge. Connect the directional bridge directly to the spectrum analyzer input using an adapter, not a cable.

10. On the spectrum analyzer, press **PEAK SEARCH, MKR →**, **MARKER → REF LVL**. Wait for completion of a new sweep. Press **MKR, MARKER DELTA**, **FREQUENCY, ⇑**.

11. On the Agilent 8340A/B, press **RF, ON**, **POWER LEVEL,** –14, **dBm**.

12. On the spectrum analyzer, press **PEAK SEARCH**.

13. On the Agilent 8340A/B, adjust the power level for a ΔMKR amplitude reading of 0 dB ±0.17 dB on the spectrum analyzer.

14. On the spectrum analyzer, press **MKR, MARKER NORMAL**, **PEAK SEARCH, MARKER DELTA**, **FREQUENCY, ⇓**, **⇓**. Wait for completion of a new sweep. Press **PEAK SEARCH**.

15. Record the spectrum analyzer ΔMKR amplitude reading below as the lower product suppression.

    Lower product suppression _____ dBc

16. On the Agilent 3335A, press **FREQUENCY**, 45.05, **MHz**.

17. On the Agilent 8340A/B, press **CW,** 45, **MHz**.

ManualsPlus.com

18. On the spectrum analyzer, press **FREQUENCY,** ⇓, ⇓, ⇓. Wait for completion of a new sweep. Press **PEAK SEARCH**.

19. Record the spectrum analyzer ΔMKR amplitude reading below as the upper product suppression.

Upper product suppression _____ dBc

20. Between the upper and lower product suppressions recorded in steps 15 and 19 above, record the more positive suppression as the third order intermodulation distortion.

Third order intermodulation distortion_____ dBc

ManualsPlus.com

44. Third Order Intermodulation Distortion: Agilent 8561E/EC

Instrument Under Test

Agilent 8561E/EC

Related Specification

Third Order Intermodulation Distortion

Related Adjustment

1st LO Distribution Amplifier Adjustment

Description

Two synthesized sources provide the signals required for measuring third order intermodulation distortion. In the 30 Hz to 2.9 GHz band, a filter is used to attenuate the second harmonic of the signal closest to the distortion product being measured. A filter is not necessary in the preselected band. The spectrum analyzer provides the 10 MHz reference for the synthesized sources.

Figure 10-54 Third Order Intermodulation Test Setup (<2.9 GHz)

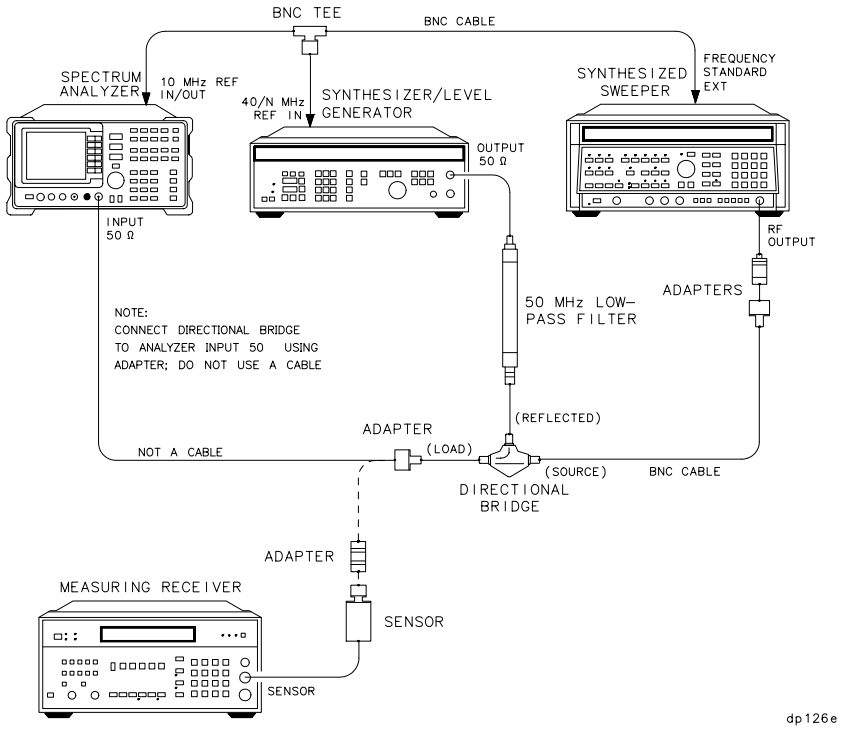

ManualsPlus.com

Figure 10-55 Third Order Intermodulation Test Setup (>2.9 GHz)

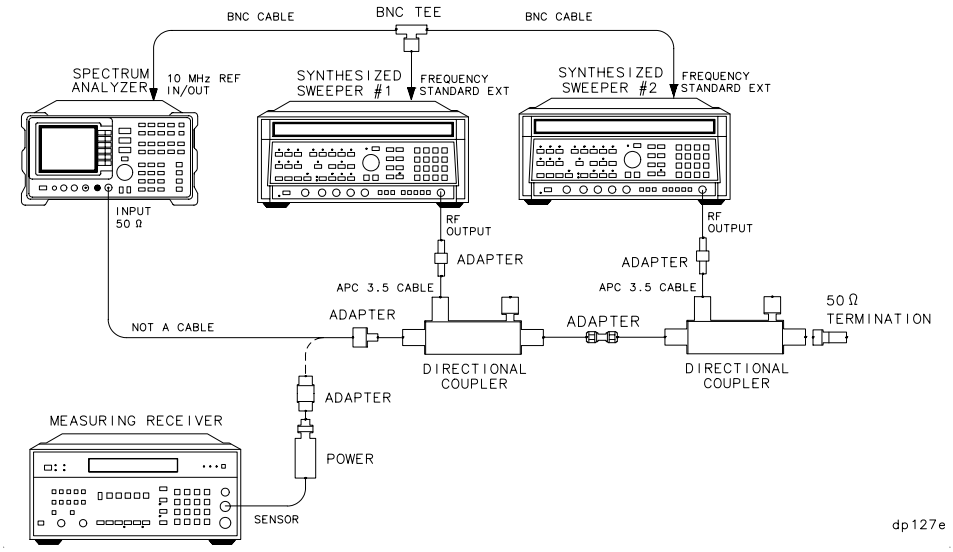

Equipment

Synthesizer/level generator . . . . . Agilent 3335A

Synthesized sweeper *(2 required)* . . . . . .Agilent 8340A/B

Measuring receiver . . . . . Agilent 8902A

Power sensor. . . . . Agilent 8481A

Directional bridge. . . . . Agilent 8721A

Directional coupler *(2 required)*. 0955-0098

50 MHz low-pass filter 0955-0306

50 Ω SMA termination. 1810-0118

Adapters

Type N (f) to APC 3.5 (f). 1250-1745

Type N (m) to BNC (m) 1250-1473

Type N (f) to type N (f). 1250-1472

Type N (m) to APC 3.5 (m). 1250-1743

APC 3.5 (f) to APC 3.5 (f) *(2 required)*. 5061-5311

SMA (m) to SMA (m) 1250-1159

BNC tee (m) (f) (f). 1250-0781

ManualsPlus.com

Cables

BNC, 122 cm (48 in.) *(4 required)*. . . . . Agilent 10503A

APC 3.5, 91 cm (36 in.) *(2 required)* 8120-4291

Procedure

Third Order Intermodulation (<2.9 GHz)

1. Connect the equipment as shown in Figure 10-54, but do not connect the directional bridge to the spectrum analyzer.
2. Set the Agilent 3335A controls as follows:

   Frequency . . . . . .45 MHz

   Amplitude . . . . . –14 dB

   Amplitude increment . . . . . 0.05 dB

   Output. . . . . 50 Ω
3. Press **INSTR PRESET** on the Agilent 8340A/B and set the controls as follows:

   CW frequency . . . . . 45.05 MHz

   Power level . . . . . .–110 dBm

   Modulation . . . . . off

   RF power. . . . . off

   Frequency standard switch (rear panel). . . . . .EXT
4. On the Agilent 8902A, set the controls as follows:

   Function . . . . . RF power

   Log/linear . . . . . Log
5. Press **PRESET** on the spectrum analyzer. Set the controls as follows:

   Center frequency . . . . . 45.0 MHz

   Center frequency step . . . . . 50 kHz

   Span . . . . . 1 kHz

   Reference level . . . . . .–20 dBm

   Resolution BW . . . . . 10 Hz
6. Zero the Agilent 8902A/Agilent 8482A combination and calibrate the Agilent 8482A at 50 MHz as described in the Agilent 8902A Operation Manual.

ManualsPlus.com

7. Connect the power sensor to the output of the directional bridge using an adapter; do not use a cable.
8. Press **AMPLITUDE** on the Agilent 3335A and use the INCR keys to adjust the amplitude for a –20 dBm ±0.1 dB reading on the Agilent 8902A display.
9. Disconnect the power sensor from the directional bridge. Connect the directional bridge directly to the spectrum analyzer input using an adapter, not a cable.
10. On the spectrum analyzer, press **PEAK SEARCH, MKR** →, **MARKER** → **REF LVL**. Wait for completion of a new sweep. Press **MKR, MARKER DELTA**, **FREQUENCY,** ⇑.
11. On the Agilent 8340A/B, press **RF, ON**, **POWER LEVEL,** –14, **dBm**.
12. On the spectrum analyzer, press **PEAK SEARCH**.
13. On the Agilent 8340A/B, adjust the power level for a ΔMKR amplitude reading of 0 dB ±0.17 dB on the spectrum analyzer.
14. On the spectrum analyzer, press **MKR, MARKER NORMAL**, **PEAK SEARCH, MARKER DELTA, FREQUENCY**, ⇓, ⇓. Wait for completion of a new sweep. Press **PEAK SEARCH**.
15. Record the spectrum analyzer ΔMKR amplitude reading below as the lower product suppression.

    Lower product suppression_____ dBc

16. On the Agilent 3335A, press **FREQUENCY,** 45.05, **MHz**.
17. On the Agilent 8340A/B, press **CW,** 45, **MHz**.
18. On the spectrum analyzer, press **FREQUENCY**, ⇑, ⇑, ⇑. Wait for completion of a new sweep. Press **PEAK SEARCH**.
19. Record the spectrum analyzer ΔMKR amplitude reading below as the upper product suppression.

    Upper product suppression _____ dBc

20. Between the upper and lower product suppressions recorded in steps 15 and 19 above, record the more positive suppression as the third order intermodulation distortion.

    Third order
    intermodulation distortion _____ dBc

ManualsPlus.com

Third Order Intermodulation (>2.9 GHz)

21. Connect the equipment as shown in Figure 10-55, but do not connect the directional coupler to the spectrum analyzer. The spectrum analyzer provides the 10 MHz reference to the synthesized sweepers.

22. On each Agilent 8340A/B, press **INSTR PRESET**. Set the controls as follows:

    Power level . . . . . 0 dBm

    Modulation . . . . . off

    RF power. . . . . off

    Frequency standard switch (Rear Panel) . . . . . .EXT

23. On Agilent 8340A/B #1, press **CW,** 5, **GHz**.

24. On Agilent 8340A/B #2, press, **CW,** 5.00005, **GHz**.

25. Enter the power sensor 5 GHz calibration factor into the Agilent 8902A.

26. On the spectrum analyzer, press **PRESET, RECALL, MORE 1 OF 2**, **FACTORY PRSEL PK**. Set the controls as follows:

    Center frequency . . . . . .5.0 GHz

    Reference level . . . . . .–15 dBm

    Span . . . . . 10 kHz

    Center frequency step . . . . . 50 kHz

    Resolution BW . . . . . 300 Hz

    Video average . . . . . off

27. Connect the power sensor to the directional coupler using an adapter; do not use a cable.

28. On Agilent 8340A/B #1, press **RF** ON **POWER LEVEL**. Adjust the power level for a –15 dBm ±0.1 dB reading on the Agilent 8902A display.

29. Disconnect the power sensor from the directional coupler. Connect the directional coupler to the spectrum analyzer INPUT 50 Ω using an adapter. Do not use a cable.

30. On the spectrum analyzer, press **PEAK SEARCH**, **AMPLITUDE**, **MORE 1 OF 3, MORE 2 OF 3, PRESEL AUTO PK**. Wait for the PEAKING message to disappear. Press **SPAN,** 1, **kHz**, **BW**, 10, **Hz**.

31. On the spectrum analyzer, press **PEAK SEARCH**, **MKR** →,

ManualsPlus.com

MARKER → **REF LVL**. Wait for completion of a new sweep. Press **MKR, MARKER DELTA**, **FREQUENCY,** ⇑.

32. On Agilent 8340A/B #2, press **RF, ON**, **POWER LEVEL**.

33. On the spectrum analyzer, press **PEAK SEARCH**.

34. On Agilent 8340A/B #2, adjust the power level for a ΔMKR amplitude reading of 0.0 dB ±0.17 dB on the spectrum analyzer.

35. On the spectrum analyzer, press **MKR, MARKER NORMAL**, **PEAK SEARCH**, **MARKER DELTA, FREQUENCY,** ⇑. Press **BW, VID AVG ON,** 5, **Hz**, **TRACE, CLEAR WRITE A**. Wait until VAVG 5 is displayed above the graticule.

36. Press **SGL SWP** and wait for completion of a new sweep. Press **PEAK SEARCH**. Record the spectrum analyzer ΔMKR amplitude reading below as the upper product suppression.

Upper product suppression _____ dBc

37. On the spectrum analyzer, press **FREQUENCY,** ⇓, ⇓, ⇓. Press **TRIG, SWEEP CONT, TRACE, CLEAR WRITE A**. Wait until VAVG 5 is displayed above the graticule.

38. Press **SGL SWP** and wait for completion of a new sweep. Press **PEAK SEARCH**. Record the spectrum analyzer ΔMKR amplitude reading below as the lower product suppression.

Lower product suppression_____ dBc

39. Between the upper and lower product suppressions recorded in steps 36 and 38 above, record the more positive suppression as the uncorrected third order intermodulation distortion.

Uncorrected third order
intermodulation distortion _____ dBc

40. The uncorrected third order intermodulation distortion represents the distortion with –25 dBm at the input mixer. The distortion products with –30 dBm at the input mixer will be 10 dB lower than the distortion products measured. Subtract 10 dB from the uncorrected third order intermodulation distortion and record the result as the corrected third order intermodulation distortion.

Corrected third order
intermodulation distortion _____ dBc

ManualsPlus.com

45. Third Order Intermodulation Distortion: Agilent 8562E/EC, 8563E/EC

Instrument Under Test

Agilent 8562E/EC
Agilent 8563E/EC

Related Specification

Third Order Intermodulation Distortion

Related Adjustment

1st LO Distribution Amplifier Adjustment

Description

Two synthesized sources provide the signals required for measuring third order intermodulation distortion. In the 30 Hz to 2.9 GHz band, a filter is used to attenuate the second harmonic of the signal closest to the distortion product being measured. A filter is not necessary in the preselected bands. The spectrum analyzer provides the 10 MHz reference for the synthesized sources.

ManualsPlus.com

Figure 10-56 Third Order Intermodulation Test Setup (50 Hz to 2.9 GHz)

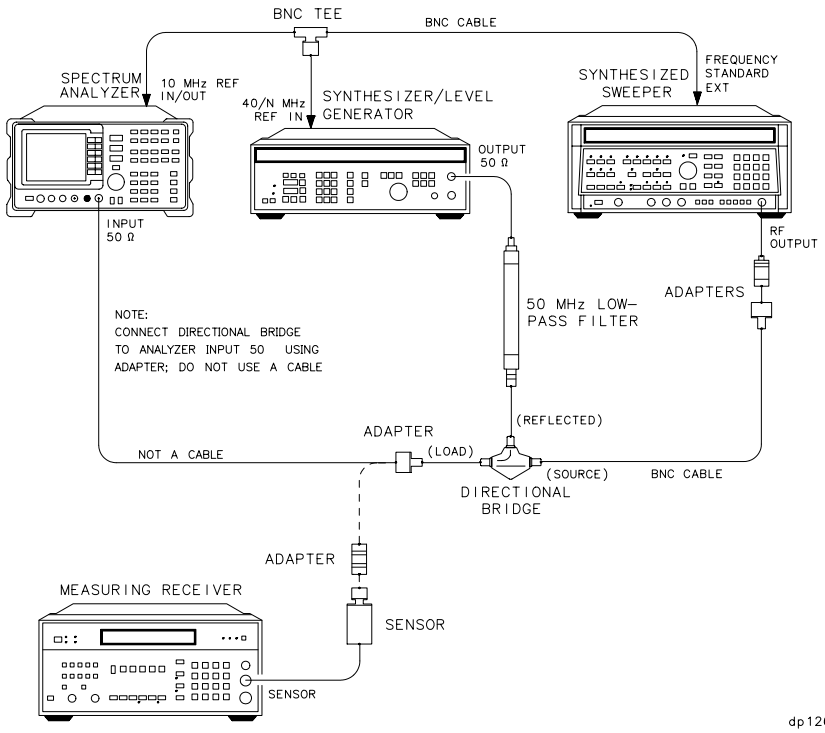

Figure 10-57 Third Order Intermodulation Test Setup (2.75 GHz to 6.5 GHz)

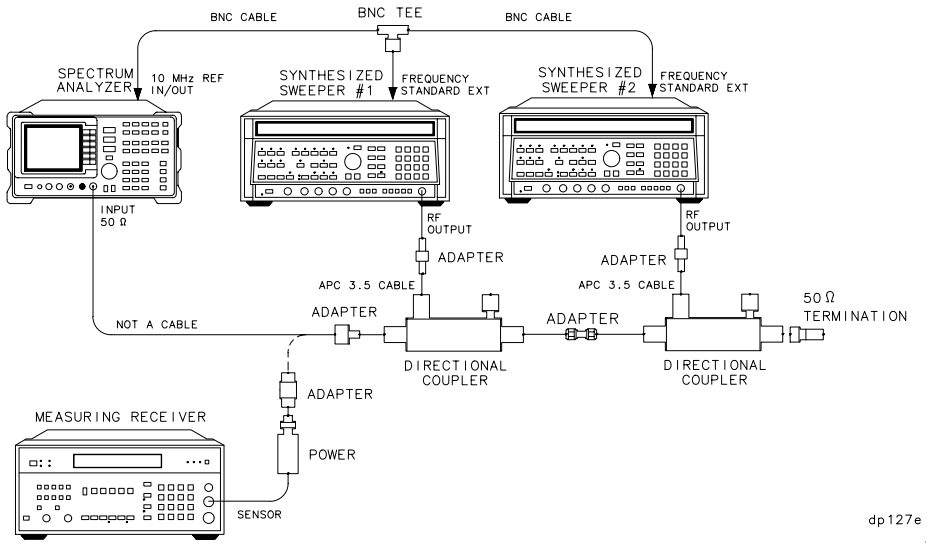

Equipment

Synthesizer/level generator . . . . . Agilent 3335A

Synthesized sweeper *(2 required)* . . . . . .Agilent 8340A/B

Measuring receiver . . . . . Agilent 8902A

ManualsPlus.com

Power sensor . . . . . Agilent 8481A

Directional bridge . . . . . Agilent 8721A

Directional coupler *(2 required)* 0955-0098

50 MHz low-pass filter 0955-0306

50 Ω SMA termination 1810-0118

Adapters

Type N (f) to APC 3.5 (f) 1250-1745

Type N (m) to BNC (m) 1250-1473

Type N (f) to type N (f) 1250-1472

Type N (m) to APC 3.5 (m) 1250-1743

APC 3.5 (f) to APC 3.5 (f) *(2 required)* 5061-5311

SMA (m) to SMA (m) 1250-1159

BNC tee (m) (f) (f) 1250-0781

Cables

BNC, 122 cm (48 in.) *(4 required)* . . . . . Agilent 10503A

APC 3.5, 91 cm (36 in.) *(2 required)* 8120-4291

Procedure

Third Order Intermodulation (< 2.9 GHz)

1. Connect the equipment as shown in Figure 10-56, but do not connect the directional bridge to the spectrum analyzer.
2. Set the Agilent 3335A controls as follows:

   Frequency . . . . . 45 MHz

   Amplitude . . . . . –14 dBm

   Amplitude increment . . . . . 0.05 dB

   Output . . . . . 50 Ω
3. Press **INSTR PRESET** on the Agilent 8340A/B and set the controls as follows:

   CW frequency . . . . . 45.05 MHz

ManualsPlus.com

Power level . . . . . –110 dBm

Modulation . . . . . off

RF power . . . . . off

Frequency standard switch (rear panel) . . . . . EXT

4. On the Agilent 8902A, set the controls as follows:

   Function . . . . . RF power

   Log/linear . . . . . Log

5. Press **PRESET** on the spectrum analyzer. Set the controls as follows:

   Center frequency . . . . . 45.0 MHz

   Center frequency step . . . . . 50 kHz

   Span . . . . . 1 kHz

   Reference level . . . . . –20 dBm

   Resolution BW . . . . . 10 Hz

6. Zero the Agilent 8902A/Agilent 8481A combination and calibrate the Agilent 8481A at 50 MHz as described in the Agilent 8902A Operation Manual.

7. Connect the power sensor to the output of the directional bridge using an adapter; do not use a cable.

8. Press **AMPLITUDE** on the Agilent 3335A and use the INCR keys to adjust the amplitude for a –20 dBm ±0.1 dB reading on the Agilent 8902A display.

9. Disconnect the power sensor from the directional bridge. Connect the directional bridge directly to the spectrum analyzer input using an adapter, not a cable.

10. On the spectrum analyzer, press **PEAK SEARCH, MKR** →, **MARKER** → **REF LVL**. Wait for completion of a new sweep. Press **MKR, MARKER DELTA**, **FREQUENCY,** ⇑.

11. On the Agilent 8340A/B, press **RF**, **ON**, **POWER LEVEL,** –14, **dBm**.

12. On the spectrum analyzer, press **PEAK SEARCH**.

13. On the Agilent 8340A/B, adjust the power level for a ΔMKR amplitude reading of 0 dB ±0.17 dB on the spectrum analyzer.

14. On the spectrum analyzer, press **MKR, MARKER NORMAL**, **PEAK SEARCH, MARKER DELTA, FREQUENCY**, ⇓, ⇓. Wait for completion of a new sweep. Press **PEAK SEARCH**.

ManualsPlus.com

15. Record the spectrum analyzer ΔMKR amplitude reading below as the lower product suppression.

Lower product suppression_____ dBc

16. On the Agilent 3335A, press **FREQUENCY,** 45.05, **MHz**.

17. On the Agilent 8340A/B, press **CW,** 45, **MHz**.

18. On the spectrum analyzer, press **FREQUENCY,** ⇑, ⇑, ⇑. Wait for completion of a new sweep. Press **PEAK SEARCH**.

19. Record the spectrum analyzer ΔMKR amplitude reading below as the upper product suppression.

Upper product suppression_____ dBc

20. Between the upper and lower product suppressions recorded in steps 15 and 19 above, record the more positive suppression as the third order intermodulation distortion at 45 MHz.

Third order
intermodulation distortion, 45 MHz_____ dBc

Third Order Intermodulation (2.9 GHz to 6.46 GHz)

21. Connect the equipment as shown in Figure 10-57, but do not connect the directional coupler to the spectrum analyzer. The spectrum analyzer provides the 10 MHz reference to the synthesized sweepers.

22. On each Agilent 8340A/B, press **INSTR PRESET**. Set the controls as follows:

Power level . . . . . 0 dBm

Modulation . . . . . off

RF power. . . . . off

Frequency standard switch (Rear Panel) . . . . . .EXT

23. On Agilent 8340A/B #1, press **CW,** 5, **GHz**.

24. On Agilent 8340A/B #2, press **CW,** 5.00005, **GHz**.

25. Enter the power sensor 5 GHz calibration factor into the Agilent 8902A.

26. On the spectrum analyzer, press **PRESET**, **RECALL, MORE 1 OF 2**, **FACTORY PRSEL PK**. Set the controls as follows:

Center frequency . . . . . .5.0 GHz

ManualsPlus.com

Reference level. . . . . –15 dBm

Span . . . . . 10 kHz

Center frequency step . . . . . 50 kHz

Resolution BW. . . . . 300 Hz

Video average . . . . . off

27. Connect the power sensor to the directional coupler using an adapter; do not use a cable.

28. On Agilent 8340A/B #1, press **RF**, **ON**, **POWER LEVEL**. Adjust the power level for a –15 dBm ±0.1 dB reading on the Agilent 8902A display.

29. Disconnect the power sensor from the directional coupler. Connect the directional coupler to the spectrum analyzer INPUT 50 Ω using an adapter. Do not use a cable.

30. On the spectrum analyzer, press **PEAK SEARCH, AMPLITUDE**, **MORE 1 OF 3**, **MORE 2 OF 3, PRESEL AUTO PK**. Wait for the PEAKING message to disappear. Press **SPAN**, 1, **kHz**, **BW**, 10, **Hz**.

31. On the spectrum analyzer, press **PEAK SEARCH, MKR** →, **MARKER** → **REF LVL**. Wait for completion of a new sweep. Press **MKR, MARKER DELTA, FREQUENCY,** ⇑.

32. On Agilent 8340A/B #2, press **RF, ON**, **POWER LEVEL**.

33. On the spectrum analyzer, press **PEAK SEARCH**.

34. On Agilent 8340A/B #2, adjust the power level for a ΔMKR amplitude reading of 0.0 dB ±0.17 dB on the spectrum analyzer.

35. On the spectrum analyzer, press **MKR**, **MARKER NORMAL**, **PEAK SEARCH**, **MARKER DELTA, FREQUENCY,** ⇑. Press **BW**, **VID AVG ON**, 5, **Hz**, **TRACE**, **CLEAR WRITE A**. Wait until VAVG 5 is displayed above the graticule.

36. Press **SGL SWP** and wait for completion of a new sweep. Press **PEAK SEARCH**. Record the spectrum analyzer ΔMKR amplitude reading below as the upper product suppression.

Upper product suppression _____ dBc

37. On the spectrum analyzer, press **FREQUENCY,** ⇓, ⇓, ⇓. Press **TRIG, SWEEP CONT**, **TRACE, CLEAR WRITE A**. Wait until VAVG 5 is displayed above the graticule.

38. Press **SGL SWP** and wait for completion of a new sweep. Press **PEAK SEARCH**. Record the spectrum analyzer ΔMKR amplitude

ManualsPlus.com

reading below as the lower product suppression.

Lower product suppression _____ dBc

39. Between the upper and lower product suppressions recorded in steps 36 and 38 above, record the more positive suppression as the uncorrected third order intermodulation distortion.

Uncorrected third order
intermodulation distortion _____ dBc

40. The uncorrected third order intermodulation distortion represents the distortion with –25 dBm at the input mixer. The distortion products with –30 dBm at the input mixer will be 10 dB lower than the distortion products measured. Subtract 10 dB from the uncorrected third order intermodulation distortion and record the result as the third order intermodulation distortion at 5 GHz.

Third order
intermodulation distortion, 5 GHz _____ dBc

Third Order Intermodulation (>6.46 GHz)

41. On Agilent 8340A/B #1, press **CW,** 8, **GHz**, **POWER LEVEL,** 0, **dBm, RF, OFF**.

42. On Agilent 8340A/B #2, press **CW,** 8.00005, **GHz**, **POWER LEVEL,** 0, **dBm**, **RF, OFF**.

43. Enter the power sensor 8 GHz calibration factor into the Agilent 8902A.

44. On the spectrum analyzer, press **PRESET, RECALL, MORE 1 OF 2**, **FACTORY PRSEL PK**. Set the controls as follows:

Center frequency . . . . . .8.0 GHz

Reference level . . . . . .–15 dBm

Span . . . . . 10 kHz

Center frequency step . . . . . 50 kHz

Resolution BW . . . . . 300 Hz

Video average . . . . . off

45. Disconnect the directional coupler from the spectrum analyzer. Connect the power sensor to the directional coupler using an adapter; do not use a cable.

46. On Agilent 8340A/B #1, press **RF, ON**, **POWER LEVEL**. Adjust the power level for a –15 dBm ±0.1 dB reading on the Agilent 8902A

ManualsPlus.com

display.

47. Disconnect the power sensor from the directional coupler. Connect the directional coupler to the spectrum analyzer INPUT 50 Ω using an adapter. Do not use a cable.

48. On the spectrum analyzer, press **PEAK SEARCH**, **AMPLITUDE**, **MORE 1 OF 3, MORE 2 OF 3, PRESEL AUTO PK**. Wait for the PEAKING message to disappear. Press **SPAN,** 1, **kHz BW,** 10, **Hz**.

49. On the spectrum analyzer, press **PEAK SEARCH, MKR** →, **MARKER** → **REF LVL**. Wait for completion of a new sweep. Press **MKR, MARKER DELTA, FREQUENCY,** ⇑.

50. On Agilent 8340A/B #2, press **RF, ON**, **POWER LEVEL**.

51. On the spectrum analyzer, press **PEAK SEARCH**.

52. On Agilent 8340A/B #2, adjust the power level for a ΔMKR amplitude reading of 0.0 dB ±0.17 dB on the spectrum analyzer.

53. On the spectrum analyzer, press **MKR**, **MARKER NORMAL**, **PEAK SEARCH, MARKER DELTA**, **FREQUENCY,** ⇑. Press **BW**, **VID AVG ON,** 5, **Hz**, **TRACE, CLEAR WRITE A**. Wait until VAVG 5 is displayed above the graticule.

54. Press **SGL SWP** and wait for completion of a new sweep. Press **PEAK SEARCH**. Record the spectrum analyzer ΔMKR amplitude reading below as the upper product suppression.

Upper product suppression _____ dBc

55. On the spectrum analyzer, press **FREQUENCY,** ⇓, ⇓, ⇓. Press **TRIG**, **SWEEP CONT, TRACE**, **CLEAR WRITE A**. Wait until VAVG 5 is displayed above the graticule.

56. Press **SGL SWP** and wait for completion of a new sweep. Press **PEAK SEARCH**. Record the spectrum analyzer ΔMKR amplitude reading below as the lower product suppression.

Lower product suppression_____ dBc

57. Between the upper and lower product suppressions recorded in steps 53 and 56 above, record the more positive suppression as the uncorrected third order intermodulation distortion.

Uncorrected third order
intermodulation distortion _____ dBc

58. Subtract 10 dB from the uncorrected third order intermodulation distortion and record the result as the third order intermodulation

ManualsPlus.com

distortion at 8 GHz.

Third order
intermodulation distortion, 8 GHz _____ dBc

ManualsPlus.com

46. Third Order Intermodulation Distortion: Agilent 8564E/EC, 8565E/EC

Instrument Under Test

Agilent 8564E/EC
Agilent 8565E/EC

Related Specification

Third Order Intermodulation Distortion

Related Adjustment

1st LO Distribution Amplifier Adjustment

Description

Two synthesized sources provide the signals required for measuring third order intermodulation distortion. In the 30 Hz to 2.9 GHz band, a filter is used to attenuate the second harmonic of the signal closest to the distortion product being measured. A filter is not necessary in the preselected bands. The spectrum analyzer provides the 10 MHz reference for the synthesized sources.

Figure 10-58 Third Order Intermodulation Test Setup (50 Hz to 2.9 GHz)

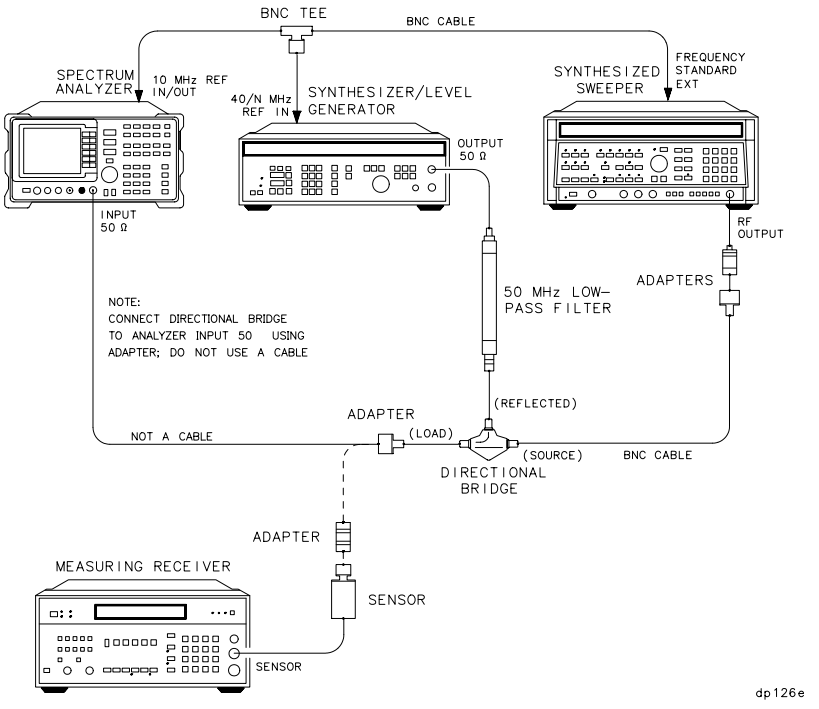

ManualsPlus.com

Figure 10-59 Third Order Intermodulation Test Setup (2.75 GHz to 6.5 GHz)

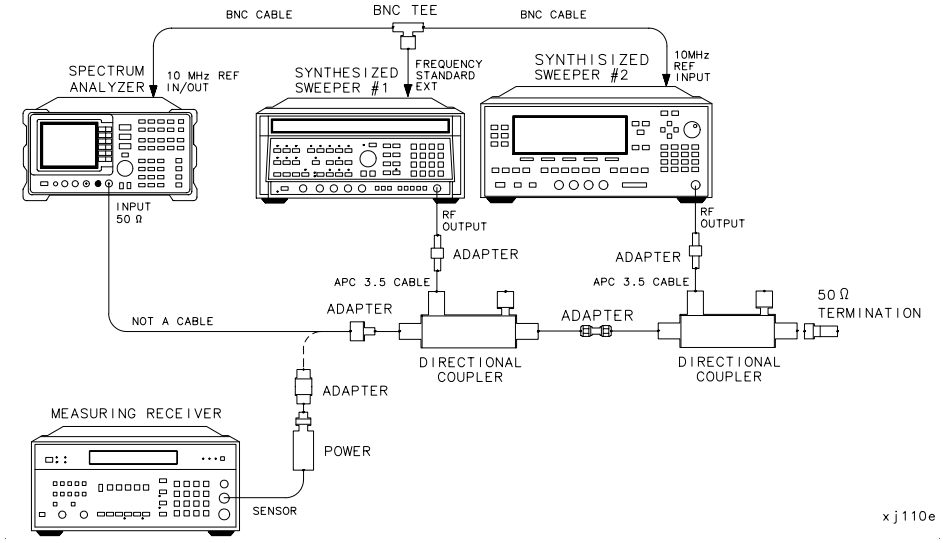

Equipment

Synthesizer/level generator . . . . . Agilent 3335A

Synthesized sweeper #1 . . . . . Agilent 8340A/B

Synthesized sweeper #2 . . . . . Agilent 83650A

Measuring receiver . . . . . Agilent 8902A

Power sensor . . . . . Agilent 8481A

Directional bridge . . . . . Agilent 8721A

Directional coupler *(2 required)* 0955-0098

50 MHz low-pass filter 0955-0306

50 Ω SMA termination 1810-0118

Adapters

Type N (f) to APC 3.5 (f) 1250-1745

Type N (m) to BNC (m) 1250-1473

Type N (f) to type N (f) 1250-1472

Type N (m) to APC 3.5 (m) 1250-1743

APC 3.5 (f) to APC 3.5 (f) 5061-5311

SMA (m) to SMA (m) 1250-1159

BNC tee (m) (f) (f) 1250-0781

APC 3.5 (f) to 2.4 mm (f) . . . . . Agilent 11901B

ManualsPlus.com

Cables

BNC, 122 cm (48 in.) *(4 required)* . . . . . Agilent 10503A

APC 3.5, 91 cm (36 in.) *(2 required)* 8120-4291

Procedure

Third Order Intermodulation (< 2.9 GHz)

1. Connect the equipment as shown in Figure 10-58, but do not connect the directional bridge to the spectrum analyzer.
2. Set the Agilent 3335A controls as follows:

   Frequency . . . . . 45 MHz

   Amplitude . . . . . –14 dBm

   Amplitude increment . . . . . 0.05 dB

   Output . . . . . 50 Ω
3. Press **INSTR PRESET** on the Agilent 8340A/B and set the controls as follows:

   CW frequency . . . . . 45.05 MHz

   Power level . . . . . –110 dBm

   Modulation . . . . . off

   RF power . . . . . off

   Frequency standard switch (rear panel) . . . . . EXT
4. On the Agilent 8902A, set the controls as follows:

   Function . . . . . RF power

   Log/linear . . . . . Log
5. Press **PRESET** on the spectrum analyzer. Set the controls as follows:

   Center frequency . . . . . 45.0 MHz

   Center frequency step . . . . . 50 kHz

   Span . . . . . 1 kHz

   Reference level . . . . . –20 dBm

   Resolution BW . . . . . 10 Hz

ManualsPlus.com

6. Zero the Agilent 8902A/Agilent 8485A combination and calibrate the Agilent 8481A at 50 MHz as described in the Agilent 8902A Operation Manual.
7. Connect the power sensor to the output of the directional bridge using an adapter; do not use a cable.
8. Press **AMPLITUDE** on the Agilent 3335A and use the INCR keys to adjust the amplitude for a –20 dBm ±0.1 dB reading on the Agilent 8902A display.
9. Disconnect the power sensor from the directional bridge. Connect the directional bridge directly to the spectrum analyzer input using an adapter, not a cable.
10. On the spectrum analyzer, press **PEAK SEARCH**, **MKR** →, **MARKER** → **REF LVL**. Wait for completion of a new sweep. Press **MKR, MARKER DELTA**, **FREQUENCY**, ⇑.
11. On the Agilent 8340A/B, press **RF**, **ON**, **POWER LEVEL**, –14, **dBm**.
12. On the spectrum analyzer, press **PEAK SEARCH**.
13. On the Agilent 8340A/B, adjust the power level for a ΔMKR amplitude reading of 0 dB ±0.17 dB on the spectrum analyzer.
14. On the spectrum analyzer, press **MKR**, **MARKER NORMAL**, **PEAK SEARCH, MARKER DELTA**, **FREQUENCY**, ⇓, ⇓. Wait for completion of a new sweep. Press **PEAK SEARCH**.
15. Record the spectrum analyzer ΔMKR amplitude reading below as the lower product suppression.

    Lower product suppression_____ dBc

16. On the Agilent 3335A, press **FREQUENCY,** 45.05, **MHz**.
17. On the Agilent 8340A/B, press **CW,** 45, **MHz**.
18. On the spectrum analyzer, press **FREQUENCY**, ⇑, ⇑, ⇑. Wait for completion of a new sweep. Press **PEAK SEARCH**.
19. Record the spectrum analyzer ΔMKR amplitude reading below as the upper product suppression.

    Upper product suppression_____ dBc

20. Between the upper and lower product suppressions recorded in steps 15 and 19 above, record the more positive suppression as the third order intermodulation distortion at 45 MHz.

    Third order
    intermodulation distortion, 45 MHz_____ dBc

ManualsPlus.com

Third Order Intermodulation (2.9 GHz to 6.46 GHz)

21. Connect the equipment as shown in Figure 10-59, but do not connect the directional coupler to the spectrum analyzer. The spectrum analyzer provides the 10 MHz reference to the synthesized sweepers.

22. On the Agilent 8340A/B, press **INSTR PRESET**. Set the controls as follows:

    Power level. . . . . 0 dBm

    Modulation. . . . . .off

    RF power . . . . . .off

    Frequency standard switch (Rear Panel). . . . . EXT

23. On the Agilent 83650A, press **PRESET**. Set the controls as follows:

    Power level. . . . . 0 dBm

    Modulation. . . . . .off

    RF power . . . . . .off

24. On the Agilent 8340A/B, press **CW**, 5, **GHz**.

25. On the Agilent 83650A, press **CW**, 5.00005, **GHz**.

26. Enter the power sensor 5 GHz calibration factor into the Agilent 8902A.

27. On the spectrum analyzer, press **PRESET, RECALL**, **MORE 1 OF 2**, **FACTORY PRSEL PK**. Set the controls as follows:

    Center frequency . . . . . 5.0 GHz

    Reference level. . . . . –15 dBm

    Span . . . . . 10 kHz

    Center frequency step . . . . . 50 kHz

    Resolution BW. . . . . 300 Hz

    Video average . . . . . .off

28. Connect the power sensor to the directional coupler using an adapter; do not use a cable.

29. On the Agilent 8340A/B, press **RF, ON**, **POWER LEVEL**. Adjust the power level for a –15 dBm ±0.1 dB reading on the Agilent 8902A display.

30. Disconnect the power sensor from the directional coupler. Connect the directional coupler to the spectrum analyzer INPUT 50 Ω using

ManualsPlus.com

an adapter. Do not use a cable.

31. On the spectrum analyzer, press **PEAK SEARCH**, **AMPLITUDE**, **MORE 1 OF 3**, **MORE 2 OF 3**, **PRESEL AUTO PK**. Wait for the PEAKING message to disappear. Press **SPAN**, 1, **kHz**, **BW**, 10, **Hz**.

32. On the spectrum analyzer, press **PEAK SEARCH**, **MKR →**, **MARKER → REF LVL**. Wait for completion of a new sweep. Press **MKR, MARKER DELTA**, **FREQUENCY, ⇑**.

33. On the Agilent 83650A, press **RF, ON**, **POWER LEVEL**.

34. On the spectrum analyzer, press **PEAK SEARCH**.

35. On the Agilent 83650A, adjust the power level for a ΔMKR amplitude reading of 0.0 dB ±0.17 dB on the spectrum analyzer.

36. On the spectrum analyzer, press **MKR, MARKER NORMAL**, **PEAK SEARCH, MARKER DELTA, FREQUENCY, ⇑**. Press **BW**, **VID AVG ON**, 5, **Hz**, **TRACE, CLEAR WRITE A**. Wait until VAVG 5 is displayed above the graticule.

37. Press **SGL SWP** and wait for completion of a new sweep. Press **PEAK SEARCH**. Record the spectrum analyzer ΔMKR amplitude reading below as the upper product suppression.

Upper product suppression_____ dBc

38. On the spectrum analyzer, press **FREQUENCY, ⇑**, ⇑, ⇑. Press **TRIG**, **SWEEP CONT, TRACE, CLEAR WRITE A**. Wait until VAVG 5 is displayed above the graticule.

39. Press **SGL SWP** and wait for completion of a new sweep. Press **PEAK SEARCH**. Record the spectrum analyzer ΔMKR amplitude reading below as the lower product suppression.

Lower product suppression_____ dBc

40. Between the upper and lower product suppressions recorded in steps 36 and 38 above, record the more positive suppression as the uncorrected third order intermodulation distortion.

Uncorrected third order
intermodulation distortion _____ dBc

41. The uncorrected third order intermodulation distortion represents the distortion with –25 dBm at the input mixer. The distortion products with –30 dBm at the input mixer will be 10 dB lower than the distortion products measured. Subtract 10 dB from the uncorrected third order intermodulation distortion and record the

ManualsPlus.com

result as the third order intermodulation distortion at 5 GHz.

Third order
intermodulation distortion, 5 GHz _____ dBc

Third Order Intermodulation (>6.46 GHz)

42. On the Agilent 8340A/B, press **CW**, 8, **GHz**, **POWER LEVEL**, 0, **dBm**, **RF, OFF**.
43. On the Agilent 83650A, press **CW,** 8.00005, **GHz**, **POWER LEVEL**, 0, **dBm**, **RF, OFF**.
44. Enter the power sensor 8 GHz calibration factor into the Agilent 8902A.
45. On the spectrum analyzer, press **PRESET, RECALL**, **MORE 1 OF 2**, **FACTORY PRSEL PK**. Set the controls as follows:

    Center frequency . . . . . 8.0 GHz

    Reference level. . . . . –15 dBm

    Span . . . . . 10 kHz

    Center frequency step . . . . . 50 kHz

    Resolution BW. . . . . 300 Hz

    Video average . . . . . off

46. Disconnect the directional coupler from the spectrum analyzer. Connect the power sensor to the directional coupler using an adapter; do not use a cable.
47. On the HP 8340A/B, press **RF, ON**, **POWER LEVEL**. Adjust the power level for a –15 dBm ±0.1 dB reading on the Agilent 8902A display.
48. Disconnect the power sensor from the directional coupler. Connect the directional coupler to the spectrum analyzer INPUT 50 Ω using an adapter. Do not use a cable.
49. On the spectrum analyzer, press **PEAK SEARCH, AMPLITUDE**, **MORE 1 OF 3, MORE 2 OF 3, PRESEL AUTO PK**. Wait for the PEAKING message to disappear. Press **SPAN,** 1, **kHz**, **BW**, 10, **Hz**.
50. On the spectrum analyzer, press **PEAK SEARCH, MKR** →, **MARKER** → **REF LVL**. Wait for completion of a new sweep. Press **MKR, MARKER DELTA**, **FREQUENCY,** ⇑.
51. On the Agilent 83650A, press **RF, ON**, **POWER LEVEL**.
52. On the spectrum analyzer, press **PEAK SEARCH**.
53. On the Agilent 83650A, adjust the power level for a ΔMKR

ManualsPlus.com

amplitude reading of 0.0 dB ±0.17 dB on the spectrum analyzer.

54. On the spectrum analyzer, press **MKR**, **MARKER NORMAL**, **PEAK SEARCH**, **MARKER DELTA**, **FREQUENCY**, ⇑. Press **BW**, **VID AVG ON,** 5, **Hz**, **TRACE, CLEAR WRITE A**. Wait until VAVG 5 is displayed above the graticule.

55. Press **SGL SWP** and wait for completion of a new sweep. Press **PEAK SEARCH**. Record the spectrum analyzer ΔMKR amplitude reading below as the upper product suppression.

Upper product suppression_____ dBc

56. On the spectrum analyzer, press **FREQUENCY,** ⇓, ⇓, ⇓. Press **TRIG**, **SWEEP CONT, TRACE, CLEAR WRITE A**. Wait until VAVG 5 is displayed above the graticule.

57. Press **SGL SWP** and wait for completion of a new sweep. Press **PEAK SEARCH**. Record the spectrum analyzer ΔMKR amplitude reading below as the lower product suppression.

Lower product suppression_____ dBc

58. Between the upper and lower product suppressions recorded in steps 53 and 56 above, record the more positive suppression as the uncorrected third order intermodulation distortion.

Uncorrected third order
intermodulation distortion _____ dBc

59. Subtract 10 dB from the uncorrected third order intermodulation distortion and record the result as the third order intermodulation distortion at 8 GHz.

Third order
intermodulation distortion, 8 GHz _____ dBc

ManualsPlus.com

47. Gain Compression: 8560E/EC

Instrument Under Test

8560E/EC

Related Specification

Gain Compression

Related Adjustment

There is no related adjustment procedure for this performance test.

Description

This test measures the analyzer gain compression using two signals that are 3 MHz apart. First the test places a –30 dBm signal at the input of the spectrum analyzer (the analyzer reference level is also set to –30 dBm). Then a +5 dBm signal is input to the analyzer, over-driving its input. The decrease in the first signal amplitude (gain compression) caused by the second signal is the measured gain compression.

Figure 10-60 Gain Compression Test Setup

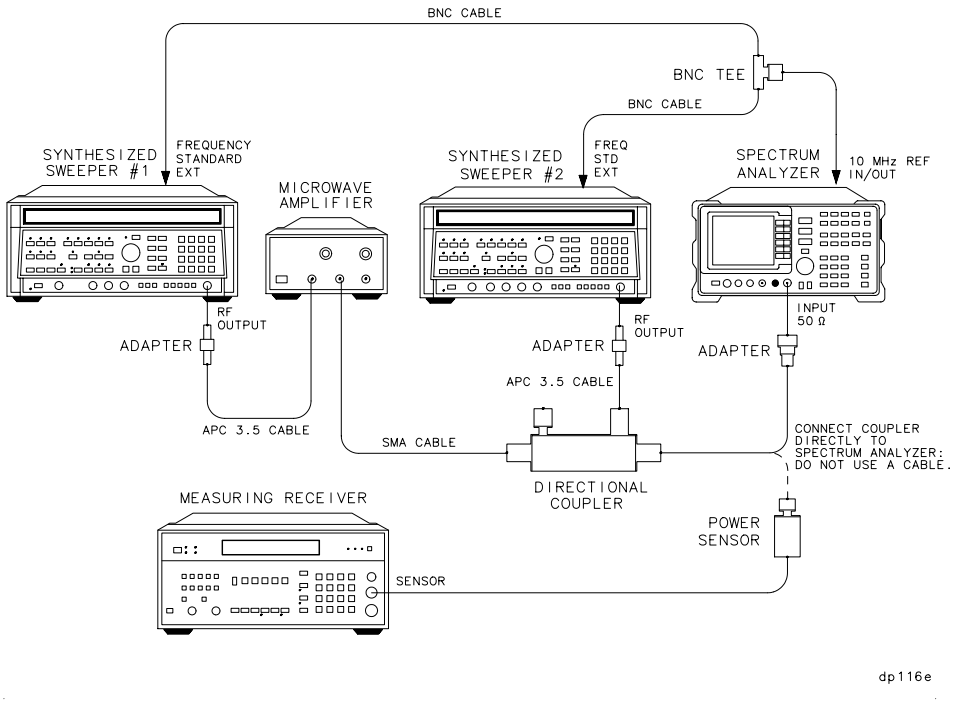

ManualsPlus.com

Equipment

Synthesized sweeper *(2 required)*. . . . . Agilent 8340A/B

Measuring receiver . . . . . Agilent 8902A

Amplifier . . . . . Agilent 11975A

Power sensor . . . . . Agilent 8485A

Directional coupler 0955-0098

Adapters

APC 3.5 (f) to APC 3.5 (f) *(2 required)* 5061-5311

Type N (m) to APC 3.5 (m) 1250-1743

BNC tee (m) (f) (f) 1250-0781

Cables

BNC, 122 cm (48 in) *(2 required)* . . . . . Agilent 10503A

APC 3.5, 91 cm (36 in) *(3 required)* 8120-4921

Procedure

1. Zero the Agilent 8902A and calibrate the Agilent 8485A power sensor as described in the Agilent 8902A Operation Manual. Enter the power sensor 2 GHz calibration factor into the Agilent 8902A.
2. Connect the equipment as shown in Figure 10-60, with the output of the directional coupler connected to the Agilent 8485A power sensor.
3. On Agilent 8340A/B #2, press **INSTR PRESET**. Set the controls as follows:

   CW frequency . . . . . .2.0 GHz

   Power level . . . . . .–24 dBm

   Frequency standard switch (rear panel). . . . . .EXT
4. On Agilent 8340A/B #1, press **INSTR PRESET**. Set the controls as follows:

   CW frequency . . . . . .2.003 GHz

   Power level . . . . . .+8 dBm

   Frequency standard switch (rear panel). . . . . .EXT
5. On the spectrum analyzer, press **PRESET**, then set the controls as follows:

ManualsPlus.com

Center frequency . . . . . 2.0 GHz

Reference level. . . . . –30 dBm

Span . . . . . 10 MHz

Resolution BW . . . . . 300 kHz

Log dB/division . . . . . 1 dB

6. Adjust the Agilent 11975A output power level for a +5 dBm ±0.01 dB reading on the Agilent 8902A display.
7. On Agilent 8340A/B #1, adjust the power level to –80 dBm.
8. Remove the power sensor from the directional coupler. Connect the directional coupler to the spectrum analyzer INPUT 50 Ω using an adapter. Do not use a cable.
9. On Agilent 8340A/B #2, adjust the power level for a signal 1 dB below the spectrum analyzer reference level.
10. On the spectrum analyzer, press **PEAK SEARCH**, **MARKER DELTA**.
11. On Agilent 8340A/B #1, set the power level to +8 dBm.
12. On the spectrum analyzer, press **PEAK SEARCH, NEXT PEAK**. The active marker should be on the lower amplitude signal, not on the signal that is off the top of the screen. If it is not on the lower amplitude signal, reposition the marker to this peak, using the front-panel function knob. Read the Δ MKR amplitude and record the value below:

Gain compression: _____ dB

(Measurement uncertainty: ±0.19 dB)

ManualsPlus.com

48. Gain Compression: Agilent 8561E/EC

Instrument Under Test

Agilent 8561E/EC

Related Specification

Gain Compression

Related Adjustment

There is no related adjustment procedure for this performance test.

Description

This test measures the analyzer gain compression using two signals that are 3 MHz apart. First the test places a –30 dBm signal at the input of the spectrum analyzer (the analyzer reference level is also set to –30 dBm). Then a +5 dBm signal is input to the analyzer, overdriving its input. The decrease in the first signal amplitude (gain compression) caused by the second signal is the measured gain compression.

Figure 10-61 Gain Compression Test Setup

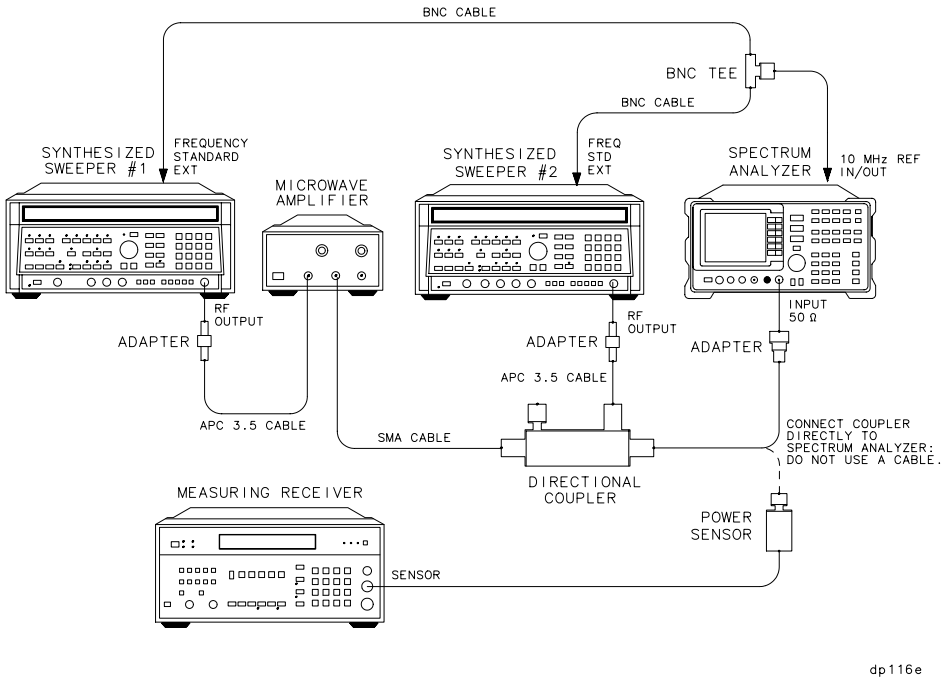

ManualsPlus.com

Equipment

Synthesized sweeper *(2 required)* . . . . . .Agilent 8340A/B

Measuring receiver . . . . . Agilent 8902A

Amplifier. . . . . Agilent 11975A

Power sensor. . . . . Agilent 8485A

Directional coupler. 0955-0098

Adapters

APC 3.5 (f) to APC 3.5 (f) *(2 required)*. 5061-5311

Type N (m) to APC 3.5 (m). 1250-1743

BNC tee (m) (f) (f). 1250-0781

Cables

BNC, 122 cm (48 in.) *(2 required)* . . . . . Agilent 10503A

APC 3.5, 91 cm (36 in.) *(3 required)* 8120-4921

Procedure

Gain Compression, Band 0 (<2.9 GHz)

1. Zero the Agilent 8902A and calibrate the Agilent 8485A power sensor as described in the Agilent 8902A Operation Manual. Enter the power sensor 2 GHz calibration factor into the Agilent 8902A.
2. Connect the equipment as shown in Figure 10-61, with the output of the directional coupler connected to the Agilent 8485A power sensor.
3. On Agilent 8340A/B #2, press **INSTR PRESET**. Set the controls as follows:

   CW frequency . . . . . 2.0 GHz

   Power level . . . . . –24 dBm

   Frequency standard switch (rear panel) . . . . . EXT
4. On Agilent 8340A/B #1, press **INSTR PRESET**. Set the controls as follows:

   CW frequency . . . . . 2.003 GHz

   Power level. . . . . +8 dBm

ManualsPlus.com

Frequency standard switch (rear panel) . . . . . EXT

5. On the spectrum analyzer, press **PRESET**.
6. Set the controls as follows:

   Center frequency . . . . . 2.0 GHz

   Reference level . . . . . –30 dBm

   Span . . . . . 10 MHz

   Resolution BW . . . . . 300 kHz

   Log dB/division . . . . . 1 dB

7. Adjust the Agilent 11975A Output Power Level for a +5 dBm ±0.01 dB reading on the Agilent 8902A display.
8. On Agilent 8340A/B #1, adjust the power level to –80 dBm.
9. Remove the power sensor from the directional coupler. Connect the directional coupler to the spectrum analyzer INPUT 50 Ω using an adapter. Do not use a cable.
10. On Agilent 8340A/B #2, adjust the power level for a signal 1 dB below the spectrum analyzer reference level.
11. On the spectrum analyzer, press **PEAK SEARCH, MARKER DELTA**.
12. On Agilent 8340A/B #1, set the power level to +8 dBm.
13. On the spectrum analyzer, press **PEAK SEARCH, NEXT PEAK**. The active marker should be on the lower amplitude signal, not on the signal that is off the top of the screen. If it is not on the lower amplitude signal, reposition the marker to this peak, using the front-panel function knob. Read the Δ MKR amplitude. Record the Δ MKR amplitude in Table 10-93 as gain compression for Band 0.

Gain Compression, Band 1 (>2.9 GHz)

14. Set the spectrum analyzer, Agilent 8340A/B #1, and Agilent 8340A/B #2 to the frequencies indicated in Table 10-93 for Band 1.
15. Set the amplitude of Agilent 8340A/B #2 to –24 dBm.
16. Enter the power sensor calibration factor, for the selected spectrum analyzer center frequency, into the Agilent 8902A.
17. Disconnect the directional coupler from the spectrum analyzer; reconnect it to the power sensor.
18. Adjust the Agilent 11975A output power level for a +7 dBm ±0.01 dB reading on the Agilent 8902A display.

ManualsPlus.com

19. On the Agilent 8340A/B #1, set the power level to –80 dBm.
20. Reconnect the directional coupler to the spectrum analyzer INPUT 50 Ω connector.
21. On the Agilent 8340A/B #2, adjust the power level to bring the signal 1 dB (one division) below the spectrum analyzer reference level.
22. On the spectrum analyzer, press **MKR, MARKERS OFF, PEAK SEARCH**.
23. Press **AUX CTRL, INTERNAL MIXER, PRESEL AUTO PK**. Wait for the PEAKING message to disappear, then press **PEAK SEARCH**, **MARKER DELTA**.
24. On the Agilent 8340A/B #1, set the power level to +8 dBm.
25. On the spectrum analyzer, press **PEAK SEARCH**, **NEXT PEAK**. The active marker should be on the peak of the lower amplitude signal. If it is not, reposition the marker to the lower peak, using the knob. Read the Δ MKR amplitude. Record the Δ MKR reading in Table 10-93 as Gain Compression for Band 1.

Table 10-93 Gain Compression

Band	Spectrum Analyzer Center Freq (GHz)	Agilent 8340A/B #1 CW (GHz)	Agilent 8340A/B #2 CW (GHz)	Gain Compression (dB)	Measurement Uncertainty (dB)
0	2.0	2.003	2.0		±0.19
1	4.0	4.003	4.0		±0.22

ManualsPlus.com

49. Gain Compression: Agilent 8562E/EC, Agilent 8563E/EC

Instrument Under Test

Agilent 8562E/EC
Agilent 8563E/EC

Related Specification

Gain Compression

Related Adjustment

There is no related adjustment procedure for this performance test.

Description

This test measures the analyzer gain compression using two signals that are 3 MHz apart. First the test places a –30 dBm signal at the input of the spectrum analyzer (the analyzer reference level is also set to –30 dBm). Then the specified signal level is input to the analyzer, overdriving its input. The decrease in the first signal amplitude (gain compression) caused by the second signal is the measured gain compression.

ManualsPlus.com

Figure 10-62 Gain Compression Test Setup

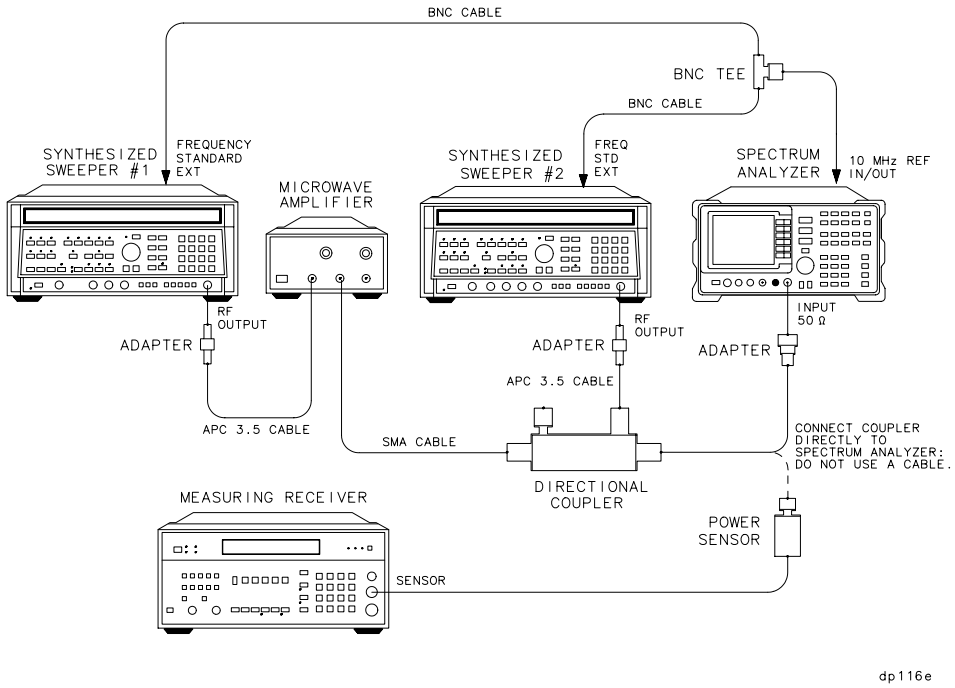

Equipment

Synthesized sweeper *(2 required)* . . . . . .Agilent 8340A/B

Measuring receiver . . . . . Agilent 8902A

Amplifier. . . . . Agilent 11975A

Power sensor. . . . . Agilent 8485A

Directional coupler. 0955-0098

Adapters

APC 3.5 (f) to APC 3.5 (f) *(2 required)*. 5061-5311

Type N (m) to APC 3.5 (m). 1250-1743

BNC tee (m) (f) (f). 1250-0781

Cables

BNC, 122 cm (48 in.) *(2 required)* . . . . . Agilent 10503A

APC 3.5, 91 cm (36 in.) *(2 required)* 8120-4921

SMA, 91 cm (36 in.) 8120-1578

ManualsPlus.com

Procedure

Band 0 (<2.9 GHz)

1. Zero the Agilent 8902A and calibrate the Agilent 8485A power sensor as described in the Agilent 8902A Operation Manual. Enter the power sensor 2 GHz calibration factor into the Agilent 8902A.
2. Connect the equipment as shown in Figure 10-62, with the output of the directional coupler connected to the Agilent 8485A power sensor.
3. On Agilent 8340A/B #2, press **INSTR PRESET**. Set the controls as follows:

   CW frequency . . . . . .2.0 GHz

   Power level . . . . . .–24 dBm

   Frequency standard switch (rear panel). . . . . .EXT
4. On Agilent 8340A/B #1, press **INSTR PRESET**. Set the controls as follows:

   CW frequency . . . . . .2.003 GHz

   Power level . . . . . .+8 dBm

   Frequency standard switch (rear panel). . . . . .EXT
5. On the spectrum analyzer, press **PRESET**.
6. Set the controls as follows:

   Center frequency . . . . . .2.0 GHz

   Reference level . . . . . .–30 dBm

   Span . . . . . .10 MHz

   Resolution BW . . . . . 300 kHz

   Log dB/division . . . . . .1 dB
7. Adjust the Agilent 11975A output power level for a +5 dBm ±0.01 dB reading on the Agilent 8902A display.
8. On Agilent 8340A/B #1, adjust the power level to –80 dBm.
9. Remove the power sensor from the directional coupler. Connect the directional coupler to the spectrum analyzer INPUT 50 Ω using an adapter. **Do not** use a cable.
10. On Agilent 8340A/B #2, adjust the power level for a signal 1 dB below the spectrum analyzer reference level.
11. On the spectrum analyzer, press **PEAK SEARCH**, **MARKER DELTA**.

ManualsPlus.com

12. On Agilent 8340A/B #1, set the power level to +8 dBm.
13. On the spectrum analyzer, press **PEAK SEARCH**, **NEXT PEAK**. The active marker should be on the lower amplitude signal, not on the signal that is off the top of the screen. If it is not on the lower amplitude signal, reposition the marker to this peak, using the front-panel function knob. Read the Δ MKR amplitude. Record the Δ MKR amplitude in Table 10-94 as gain compression, Band 0.

Gain Compression, Band 1 (2.9 GHz to 6.46 GHz)

14. Set the spectrum analyzer, Agilent 8340A/B #1 and Agilent 8340A/B #2 to the frequencies indicated in Table 10-94 for Band 1.
15. Set the amplitude of Agilent 8340A/B #2 to –24 dBm.
16. Enter the Agilent 8485A calibration factor, for the selected spectrum analyzer center frequency, into the Agilent 8902A.
17. Disconnect the directional coupler from the spectrum analyzer, and reconnect it to the Agilent 8485A power sensor.
18. Adjust the Agilent 11975A output power level for a +10 dBm ±.01 dB reading on the Agilent 8902A display.
19. On Agilent 8340A/B #1, set the power level to –80 dBm.
20. Reconnect the directional coupler to the spectrum analyzer INPUT 50 Ω. Turn the spectrum analyzer markers off.
21. On Agilent 8340A/B #2, adjust the power level to bring the signal 1 dB (one division) below the spectrum analyzer reference level.
22. On the spectrum analyzer, press **PEAK SEARCH**.
23. Press **AUX CTRL**, **INTERNAL MIXER, PRESEL AUTO PK**. Wait for the `PEAKING!` message to disappear, then press **PEAK SEARCH**, **MARKER DELTA**.
24. On Agilent 8340A/B #1, set the power level to +8 dBm.
25. On the spectrum analyzer, press **PEAK SEARCH, NEXT PEAK**. The active marker should be on the peak of the lower amplitude signal. If it is not, reposition the marker to this peak, using the front-panel function knob. Read the Δ MKR amplitude. Record the Δ MKR reading in Table 10-94 as gain compression, Band 1.

Gain Compression, Band 2 (>6.46 GHz)

26. Set the spectrum analyzer, Agilent 8340A/B #1 and Agilent 8340A/B #2 to the frequencies indicated in Table 10-94 for Band 2.
27. Set the amplitude of Agilent 8340A/B #2 to –24 dBm.

ManualsPlus.com

28. Enter the Agilent 8485A calibration factor, for the selected spectrum analyzer center frequency, into the Agilent 8902A.
29. Disconnect the directional coupler from the spectrum analyzer, and reconnect it to the Agilent 8485A power sensor.
30. Adjust the Agilent 11975A output power level for a +7 dBm ±0.01 dB reading on the Agilent 8902A display.
31. On Agilent 8340A/B #1, set the power level to –80 dBm.
32. Reconnect the directional coupler to the spectrum analyzer INPUT 50 Ω. Turn the spectrum analyzer markers off.
33. On Agilent 8340A/B #2, adjust the power level to bring the signal 1 dB (one division) below the spectrum analyzer reference level.
34. On the spectrum analyzer, press **PEAK SEARCH**.
35. Press **AUX CTRL**, **INTERNAL MIXER, PRESEL AUTO PK**. Wait for the `PEAKING!` message to disappear, then press **PEAK SEARCH**, **MARKER DELTA**.
36. On Agilent 8340A/B #1, set the power level to +8 dBm.
37. On the spectrum analyzer, press **PEAK SEARCH**, **NEXT PEAK**. The active marker should be on the peak of the lower amplitude signal. If it is not, reposition the marker to this peak, using the front-panel function knob. Read the Δ MKR amplitude. Record the Δ MKR reading in Table 10-94 as gain compression, Band 2.

Table 10-94 Gain Compression

Band	Spectrum Analyzer Center Freq (GHz)	Agilent 8340A/B #1 CW (GHz)	Agilent 8340A/B #2 CW (GHz)	Gain Compression (dB)	Measurement Uncertainty (dB)
0	2.0	2.003	2.0		±0.19
1	4.0	4.003	4.0		±0.22
2	7.0	7.003	7.0		±0.22

ManualsPlus.com

50. Gain Compression: Agilent 8564E/EC, Agilent 8565E/EC

Instrument Under Test

Agilent 8564E/EC
Agilent 8565E/EC

Related Specification

Gain Compression

Related Adjustment

There is no related adjustment procedure for this performance test.

Description

This test measures the analyzer gain compression using two signals that are 3 MHz apart. First the test places a –30 dBm signal at the input of the spectrum analyzer (the analyzer reference level is also set to –30 dBm). Then the specified signal level is input to the analyzer, overdriving its input. The decrease in the first signal amplitude (gain compression) caused by the second signal is the measured gain compression.

ManualsPlus.com

Figure 10-63 Gain Compression Test Setup

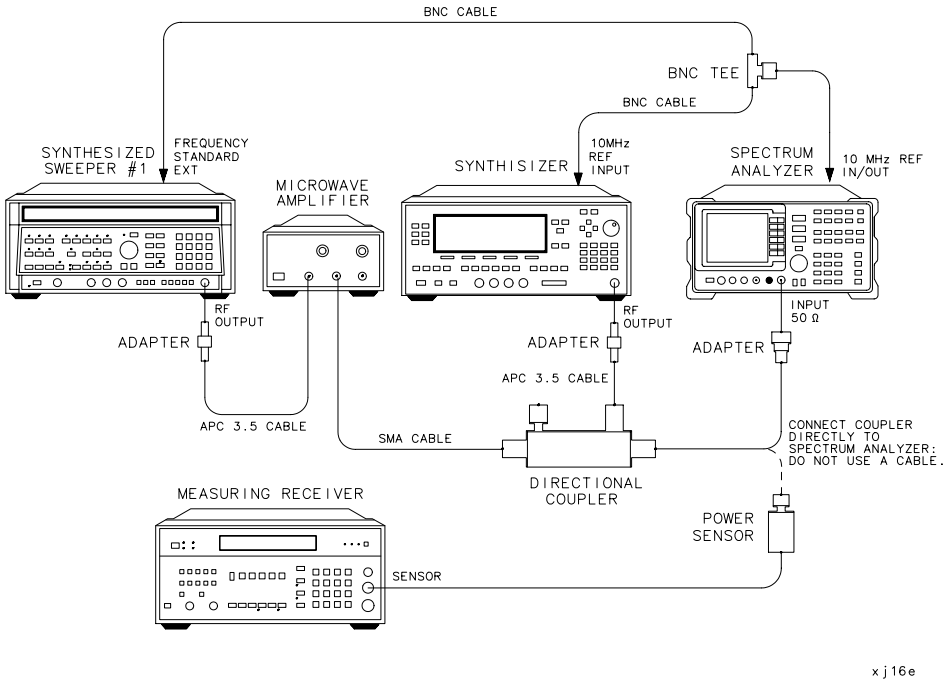

Equipment

Synthesized sweeper #1 . . . . . Agilent 8340A/B

Synthesized sweeper #2 . . . . . Agilent 83650A

Measuring receiver . . . . . Agilent 8902A

Amplifier . . . . . Agilent 11975A

Power sensor . . . . . Agilent 8485A

Directional coupler 0955-0098

Adapters

APC 3.5 (f) to APC 3.5 (f) 5061-5311

Type N (m) to APC 3.5 (m) 1250-1743

BNC tee (m) (f) (f) 1250-0781

APC 3.5 (f) to 2.4 mm (f) . . . . . Agilent 11901B

Cables

BNC, 122 cm (48 in.) *(2 required)*. . . . . Agilent 10503A

APC 3.5, 91 cm (36 in.) *(2 required)* 8120-4921

ManualsPlus.com

SMA, 91 cm (36 in.) 8120-1578

Procedure

Band 0 (<2.9 GHz)

1. Zero the Agilent 8902A and calibrate the Agilent 8485A power sensor as described in the Agilent 8902A Operation Manual. Enter the power sensor 2 GHz calibration factor into the Agilent 8902A.
2. Connect the equipment as shown in Figure 10-63, with the output of the directional coupler connected to the Agilent 8485A power sensor.
3. On the Agilent 83650A, press **PRESET**. Set the controls as follows:

   CW frequency . . . . . 2.0 GHz

   Power level . . . . . –24 dBm
4. On the Agilent 8340A/B, press **INSTR PRESET**. Set the controls as follows:

   CW frequency . . . . . 2.003 GHz

   Power level. . . . . +8 dBm

   Frequency standard switch (rear panel) . . . . . EXT
5. On the spectrum analyzer, press **PRESET**.
6. Set the controls as follows:

   Center frequency . . . . . 2.0 GHz

   Reference level. . . . . –30 dBm

   Span . . . . . 10 MHz

   Resolution BW . . . . . 300 kHz

   Log dB/division . . . . . 1 dB
7. Adjust the Agilent 11975A output power level for a +5 dBm ±0.01 dB reading on the Agilent 8902A display.
8. On the Agilent 8340A/B, adjust the power level to –80 dBm.
9. Remove the power sensor from the directional coupler. Connect the directional coupler to the spectrum analyzer INPUT 50 Ω using an adapter. **Do not** use a cable.
10. On Agilent 83650A, adjust the power level for a signal 1 dB below the spectrum analyzer reference level.
11. On the spectrum analyzer, press **PEAK SEARCH, MARKER DELTA**.

ManualsPlus.com

12. On the Agilent 8340A/B, set the power level to +8 dBm.
13. On the spectrum analyzer, press **PEAK SEARCH, NEXT PEAK**. The active marker should be on the lower amplitude signal, not on the signal that is off the top of the screen. If it is not on the lower amplitude signal, reposition the marker to this peak, using the front-panel function knob. Read the Δ MKR amplitude. Record the Δ MKR amplitude in Table 10-95 as gain compression, Band 0.

Gain Compression, Band 1 (2.9 GHz to 6.46 GHz)

14. Set the spectrum analyzer, Agilent 8340A/B #1 and Agilent 8340A/B #2 to the frequencies indicated in Table 10-95 for Band 1.
15. Set the amplitude of Agilent 8340A/B #2 to –24 dBm.
16. Enter the Agilent 8485A calibration factor, for the selected spectrum analyzer center frequency, into the Agilent 8902A.
17. Disconnect the directional coupler from the spectrum analyzer, and reconnect it to the Agilent 8485A power sensor.
18. Adjust the Agilent 11975A output power level for a +10 dBm ±.01 dB reading on the Agilent 8902A display.
19. On the Agilent 8340A/B, set the power level to –80 dBm.
20. Reconnect the directional coupler to the spectrum analyzer INPUT 50 Ω. Turn the spectrum analyzer markers off.
21. On Agilent 83650A, adjust the power level to bring the signal 1 dB (one division) below the spectrum analyzer reference level.
22. On the spectrum analyzer, press **PEAK SEARCH**.
23. Press **AUX CTRL, INTERNAL MIXER, PRESEL AUTO PK**. Wait for the `PEAKING!` message to disappear, then press **PEAK SEARCH**, **MARKER DELTA**.
24. On the Agilent 8340A/B, set the power level to +8 dBm.
25. On the spectrum analyzer, press **PEAK SEARCH**, **NEXT PEAK**. The active marker should be on the peak of the lower amplitude signal. If it is not, reposition the marker to this peak, using the front-panel function knob. Read the Δ MKR amplitude. Record the Δ MKR reading in Table 10-95 as gain compression, Band 1.

Gain Compression, Band 2 (>6.46 GHz)

26. Set the spectrum analyzer, Agilent 8340A/B and Agilent 83650A to the frequencies indicated in Table 10-95 for Band 2.
27. Set the amplitude of Agilent 8340A/B #2 to –24 dBm.

ManualsPlus.com

28. Enter the Agilent 8485A calibration factor, for the selected spectrum analyzer center frequency, into the Agilent 8902A.
29. Disconnect the directional coupler from the spectrum analyzer, and reconnect it to the Agilent 8485A power sensor.
30. Adjust the Agilent 11975A output power level for a +7 dBm ±0.01 dB reading on the Agilent 8902A display.
31. On the Agilent 8340A/B, set the power level to –80 dBm.
32. Reconnect the directional coupler to the spectrum analyzer INPUT 50 Ω. Turn the spectrum analyzer markers off.
33. On the Agilent 83650A, adjust the power level to bring the signal 1 dB (one division) below the spectrum analyzer reference level.
34. On the spectrum analyzer, press **PEAK SEARCH**.
35. Press **AUX CTRL**, **INTERNAL MIXER, PRESEL AUTO PK**. Wait for the `PEAKING!` message to disappear, then press **PEAK SEARCH**, **MARKER DELTA**.
36. On the Agilent 8340A/B, set the power level to +8 dBm.
37. On the spectrum analyzer, press **PEAK SEARCH, NEXT PEAK**. The active marker should be on the peak of the lower amplitude signal. If it is not, reposition the marker to this peak, using the front-panel function knob. Read the Δ MKR amplitude. Record the Δ MKR reading in Table 10-95 as gain compression, Band 2.

Table 10-95 Gain Compression

Band	Spectrum Analyzer Center Freq (GHz)	Agilent 8340A/B CW (GHz)	Agilent 83650A CW (GHz)	Gain Compression (dB)	Measurement Uncertainty (dB)
0	2.0	2.003	2.0		±0.19
1	4.0	4.003	4.0		±0.22
2	7.0	7.003	7.0		±0.22

ManualsPlus.com

51. 1ST LO OUTPUT Amplitude: 8560E/EC

Instrument Under Test

8560E/EC

Related Specification

1ST LO OUTPUT Amplitude Accuracy

Related Adjustment

First LO Distribution Amplifier Adjustment

Description

1ST LO OUTPUT power is measured with a power meter. For spectrum analyzers without Option 002, the spectrum analyzer is placed in external mixing mode and harmonic-locked to N = 6. This allows for the maximum tuning range of the 1st LO. For spectrum analyzers with Option 002, internal mixing mode must be used. This limits the lowest 1st LO frequency which can be set.

Figure 10-64 1ST LO OUTPUT Amplitude Test Setup

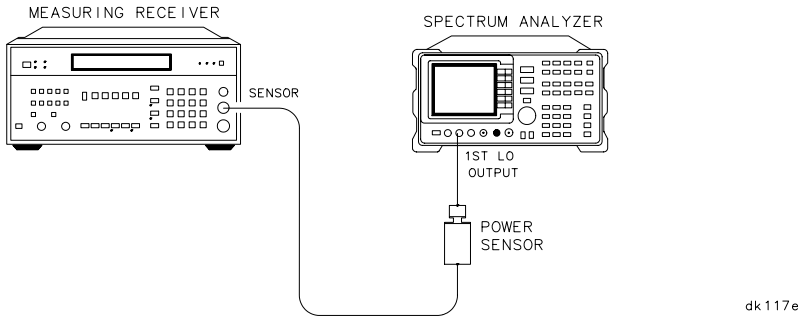

Equipment

Measuring receiver . . . . . Agilent 8902A

Power sensor . . . . . Agilent 8485A

Procedure

1. Zero the Agilent 8902A and calibrate the Agilent 8485A power sensor at 50 MHz as described in the Agilent 8902A Operation Manual. Enter the power sensor 3 GHz calibration factor into the Agilent 8902A. Set the Agilent 8902A for dBm output (LOG display).

ManualsPlus.com

2. Connect the equipment as shown in Figure 10-64.

1ST LO OUTPUT Power, Non-Option 002 Analyzers

Perform steps 3 through 5 only on analyzers that *do not* have Option 002.

3. On the spectrum analyzer, press **PRESET**, **CONFIG**, and **EXT MXR UNPR**. Set the controls as follows:

   Mixing . . . . . .External

   Lock harmonic . . . . . #6

   Center frequency . . . . . .18 GHz

   Center frequency step . . . . . 1200 MHz

   Resolution BW . . . . . 2 MHz

   Span . . . . . 0 Hz

4. Read the RF power displayed on the Agilent 8902A, and record it as the 3.000 GHz entry in <Undefined Cross-Reference>, for the 1ST LO OUTPUT power.

5. On the spectrum analyzer, use **FREQUENCY CENTER FREQ** and ⇓ to step the 1st LO frequency in 200 MHz increments (center frequency in 1200 MHz steps). Enter the appropriate power sensor calibration factor into the Agilent 8902A. At each step, record the power level displayed on the Agilent 8902A in Table 10-96.

1ST LO OUTPUT Power, Option 002 Analyzers

Perform steps 6 through 9 only if an Option 002 Analyzer is being tested.

6. On the spectrum analyzer, press **PRESET**. Set the controls as follows:

   Center frequency . . . . . 100 MHz

   Center frequency step . . . . . 200 MHz

   Resolution BW . . . . . 2 MHz

   Span . . . . . 0 Hz

7. Enter the power sensor 4 GHz calibration factor into the Agilent 8902A.

8. Read the RF power displayed on the Agilent 8902A and record it as the 4.000 GHz entry in Table 10-96 as the 1ST LO OUTPUT power.

ManualsPlus.com

9. On the spectrum analyzer, press **FREQUENCY, CENTER FREQ,** ⇑ to step the center frequency and 1st LO frequency in 200 MHz increments. Enter the appropriate power sensor calibration factor into the Agilent 8902A. At each step, record the power level displayed on the Agilent 8902A in Table 10-96.

1ST LO OUTPUT Power Test Results

10. Record the maximum 1ST LO OUTPUT power here:

Maximum 1ST LO OUTPUT power: _____ dB

11. Record the minimum 1ST LO OUTPUT power here:

Minimum 1ST LO OUTPUT power: _____ dB

ManualsPlus.com

Table 10-96 1ST LO OUTPUT Amplitude

1ST LO FREQ* (GHz)	CENTER FREQ Setting Non-Option 002 (GHz)	CENTER FREQ Setting Option 002 (GHz)	CAL Factor Frequency (GHz)	1ST LO OUTPUT Power (dBm)	Measurement Uncertainty (dB)
3.0	18	N/A	3.0		±0.18
3.2	19.2	N/A	3.0		±0.18
3.4	20.4	N/A	3.0		±0.18
3.6	21.6	N/A	4.0		±0.18
3.8	22.8	N/A	4.0		±0.18
4.0	24.0	100	4.0		±0.18
4.2	25.2	300	4.0		±0.18
4.4	26.4	500	4.0		±0.18
4.6	27.6	700	5.0		±0.18
4.8	28.8	900	5.0		±0.18
5.0	30.0	1100	5.0		±0.18
5.2	31.2	1300	5.0		±0.18
5.4	32.4	1500	5.0		±0.18
5.6	33.6	1700	6.0		±0.18
5.8	34.8	1900	6.0		±0.18
6.0	36.0	2100	6.0		±0.18
6.2	37.2	2300	6.0		±0.18
6.4	38.4	2500	6.0		±0.18
6.6	39.6	2700	7.0		±0.18
6.8	40.0	2900	7.0		±0.18
* Nominal. Actual 1st LO frequency is within 60 MHz of this frequency.					

ManualsPlus.com

52. 1ST LO OUTPUT Amplitude: Agilent 8561E/EC, Agilent 8562E/EC, Agilent 8563E/EC, Agilent 8564E/EC, Agilent8565E/EC

Instrument Under Test

Agilent 8561E/EC
Agilent 8562E/EC
Agilent 8563E/EC
Agilent 8564E/EC
Agilent 8565E/EC

Related Specification

1ST LO OUTPUT Amplitude Accuracy

Related Adjustment

Switched LO Distribution Amplifier Adjustment

Description

1ST LO OUTPUT power is measured with a power meter. The spectrum analyzer is placed in external mixing mode and harmonic-locked to N = 6. This allows the broadest tuning range of the 1st LO.

Figure 10-65 1ST LO OUTPUT Amplitude Test Setup

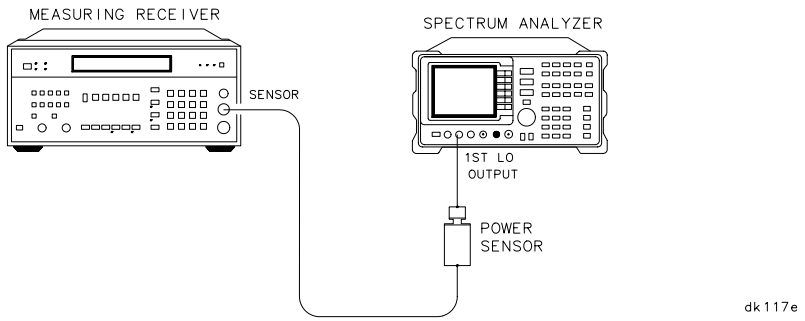

Equipment

Measuring receiver . . . . . Agilent 8902A

Power sensor . . . . . Agilent 8485A

ManualsPlus.com

Procedure

1. Zero the Agilent 8902A and calibrate the Agilent 8485A power sensor at 50 MHz as described in the Agilent 8902A Operation Manual. Enter the power sensor 3 GHz calibration factor into the Agilent 8902A. Set the Agilent 8902A for dBm output (LOG display).
2. Connect the equipment as shown in Figure 10-65.
3. On the spectrum analyzer, press **PRESET**, **CONFIG EXT, MXR UNPR, SPAN, ZERO SPAN**. Set the controls as follows:

   Mixing . . . . . .External

   Lock harmonic . . . . . #6

   Center frequency . . . . . .18 GHz

   Center frequency step . . . . . 1200 MHz

   Resolution BW . . . . . 1 MHz

   Span . . . . . 0 Hz
4. Read the RF power displayed on the Agilent 8902A, and record it as the 3.000 GHz entry in Table 10-97, column 5.
5. On the spectrum analyzer, use **FREQUENCY**, **CENTER FREQUENCY**, and ⇓ to step the 1st LO frequency in 200 MHz steps (center frequency in 1200 MHz steps). Enter the appropriate power sensor calibration factor into the Agilent 8902A. At each step, record the power level displayed on the Agilent 8902A in Table 10-97.
6. Record the maximum 1ST LO OUTPUT power here:

   Maximum 1ST LO OUTPUT power: _____ dB
7. Record the minimum 1ST LO OUTPUT power here:

   Minimum 1ST LO OUTPUT power: _____ dB

ManualsPlus.com

Table 10-97 1ST LO Output Amplitude

1ST LO Freq* (GHz)	Center Freq (N=6) (GHz)	CAL Factor Frequency (GHz)	1ST LO Output Power Actual (dBm)	Measurement Uncertainty (dB)
3.0	18	3.0		±0.18
3.2	19.2	3.0		±0.18
3.4	20.4	3.0		±0.18
3.6	21.6	4.0		±0.18
3.8	22.8	4.0		±0.18
4.0	24.0	4.0		±0.18
4.2	25.2	4.0		±0.18
4.4	26.4	4.0		±0.18
4.6	27.6	5.0		±0.18
4.8	28.8	5.0		±0.18
5.0	30.0	5.0		±0.18
5.2	31.2	5.0		±0.18
5.4	32.4	5.0		±0.18
5.6	33.6	6.0		±0.18
5.8	34.8	6.0		±0.18
6.0	36.0	6.0		±0.18
6.2	37.2	6.0		±0.18
6.4	38.4	6.0		±0.18
6.6	39.6	7.0		±0.18
6.8	40.0	7.0		±0.18

* Nominal. Actual 1st LO frequency is within 60 MHz of this frequency.

ManualsPlus.com

53. Sweep Time Accuracy

Instrument Under Test

All 8560 E-Series and EC-Series

Related Specification

Sweep Time Accuracy (SPAN = 0 Hz)

Related Adjustment

Display Adjustments (Fast Zero Span Adjustments)

Description

For sweep times less than 30 ms, an amplitude-modulated signal is displayed on the spectrum analyzer in zero span, and the frequency of the modulating signal (triangle wave) is adjusted to space the peaks evenly across the display. The frequency of the modulating signal is counted and the actual sweep time is calculated and compared to the specification.

For sweep times of 30 ms to 100 seconds, the time interval of the BLKG/GATE OUTPUT low state is measured. This time interval corresponds to the sweep time. The measured sweep time is compared to the specification.

Figure 10-66 Sweep Time Accuracy Test Setup

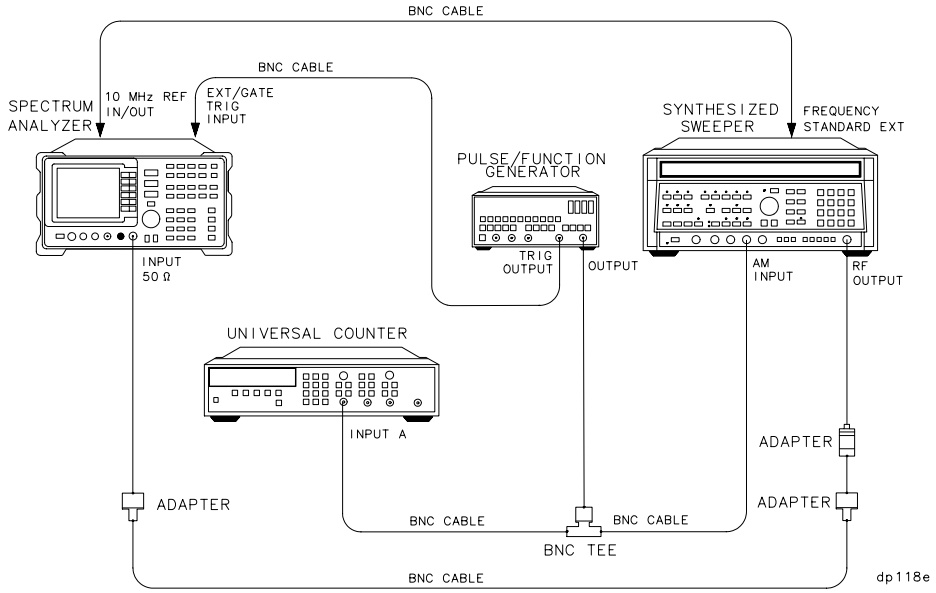

ManualsPlus.com

Equipment

Synthesized sweeper . . . . . Agilent 8340A/B

Universal counter . . . . . Agilent 5334A/B

Pulse/function generator. . . . . Agilent 8116A

Adapters

Type N (f) to APC 3.5 (f) 1250-1745

Type N (m) to BNC (f) *(2 required)*. 1250-1476

BNC tee (m) (f) (f) 1250-0781

Type N (f) to 2.4 mm (f). . . . . Agilent 11903B

(for Agilent 8564E/EC and Agilent 8565E/EC)

Cable

BNC, 122 cm (48 in.) *(5 required)*. . . . . Agilent 10503A

Procedure

Sweeptimes ≤20 ms (E-Series, Non-Option 007)

NOTE Skip steps 1 through 13 when testing an EC-Series instrument or an E-Series, Option 007. After connecting the equipment, continue with step 14.

1. Connect the equipment as shown in Figure 10-66.
2. Connect the BNC cable from the Agilent 8116A TRIG OUTPUT connected to the spectrum analyzer EXT/GATE TRIG INPUT.
3. On the spectrum analyzer, press **PRESET**. Set the controls as follows:

   Center frequency . . . . . 300 MHz

   Span . . . . . 0 Hz

   Sweep time . . . . . 50 µs

   Scale . . . . . Linear

   Resolution BW . . . . . 2 MHz

4. Set the Agilent 5334A/B as follows:

   Function/data . . . . . Frequency A

   Input A

ManualsPlus.com

×10 . . . . . off

AC . . . . . off

50 Ω Z . . . . . on

Automatic trigger . . . . . off

100 kHz filter A . . . . . off

Sensitivity . . . . . off

5. On the Agilent 5334A/B, press **READ LEVELS** once. Adjust the INPUT A LEVEL/SENS control until the number on the left side of the display reads 0.00 ±0.10. Press **READ LEVELS, READ LEVELS**, **READ LEVELS**.

6. If the LED next to the INPUT A LEVEL/SENS control is not flashing, press **SENS** (the LED inside the SENS key should now be lit). Adjust the LEVEL/SENS control until the LED next to the INPUT A LEVEL/SENS control begins to flash.

7. On the Agilent 8340A/B, press **INSTR PRESET**. Set the controls as follows:

CW frequency . . . . . 300 MHz

Power level . . . . . –5 dBm

Modulation . . . . . AM

8. On the spectrum analyzer, press **TRIG EXTERNAL**.

9. On the Agilent 8116A, set the controls as follows:

Mode . . . . . Normal

Frequency . . . . . 200 kHz

Duty cycle 50%

Amplitude . . . . . 500 mV

Offset . . . . . 0 V

Function . . . . . Triangle

Disable . . . . . Off

10. Adjust the Agilent 8116A frequency for 10 cycles evenly spaced relative to the vertical graticule lines on the analyzer. For example, if the peak of the first cycle is 0.2 divisions to the right of the first graticule line, the peak of the tenth cycle should be set 0.2 divisions to the right of the tenth graticule line.

11. Read the frequency displayed on the Agilent 5334A/B. Calculate the measured sweep time using the equation below. Record the result as the measured sweep time in Table 10-98, for the 50 µs sweep time

ManualsPlus.com

setting.

Measured sweep time = 10/Agilent 5334A/B frequency reading

12. Repeat steps 9 through 11 for sweep times between 100 µs and 20 ms, as listed in Table 10-98. Set the initial Agilent 8116A frequency according to this equation:

    Initial Agilent 8116A frequency = 10/sweep time setting

13. Disconnect the BNC cable between the Agilent 5334A/B and the Agilent 8116A.

Sweeptimes ≥30 ms

14. Connect a BNC cable from the BLKG/GATE OUTPUT on the spectrum analyzer to INPUT A of the Agilent 5334A/B.

15. Set the spectrum analyzer as follows, then press **TRIG, FREE RUN**, **SWEEP**, 30, **ms**.

    Center frequency . . . . . 300 MHz

    Span . . . . . 0 Hz

    Scale . . . . . Linear

    Resolution BW . . . . . 2 MHz

16. Turn the power to the universal counter off and back on. Press **COM A**, **TI A → B**. Set the controls as follows:

    Automatic Trigger . . . . . off

    100 kHz filter A . . . . . on

    Sense . . . . . off

17. Set the universal counter controls as follows:

    Input A

    ×10 . . . . . off

    AC . . . . . off

    50 Ω Z . . . . . off

    Slope . . . . . on

    Trigger level/sense . . . . . Fully CCW

    Input B

    ×10 . . . . . off

    AC . . . . . off

    50 Ω Z . . . . . off

ManualsPlus.com

Slope. . . . . .off

Trigger level/sense . . . . . .Fully CCW

18. Rotate the INPUT A trigger level/sense control clockwise until the LED next to the control begins to flash.

19. Rotate the INPUT B trigger level/sense control clockwise until the LED next to the control begins to flash.

20. Perform the following steps for the remaining sweep time settings listed in the first column of Table 10-98 for sweep time settings ≥30 ms:

    a. Set the spectrum analyzer to the sweep time indicated.

    b. Press **SGL SWP** on the spectrum analyzer and wait for the completion of a new sweep.

    c. Record the Agilent 5334A/B reading as the measured sweep time in the second column of Table 10-98.

NOTE It might be necessary to readjust the LEVEL/SENS controls slightly for a stable display.

ManualsPlus.com

Table 10-98 Sweep Time Accuracy

Sweep Time Setting	Measured Sweep Time	Measurement Uncertainty
50 µs		±750 ns
100 µs		±1.5 µs
200 µs		±3.0 µs
500 µs		±7.5 µs
1 ms		±15 µs
2 ms		±30 µs
5 ms		±75 µs
10 ms		±150 µs
20 ms		±300 µs
30 ms		±209 ns
50 ms		±281 ns
100 ms		±461 ns
200 ms		±821 ns
500 ms		±1.901 µs
1 s		±3.7 µs
2 s		±7.3 µs
5 s		±18.1 µs
10 s		±36.1 µs
20 s		±72.1 µs
50 s		±180.1 µs
100 s		±360.1 µs

ManualsPlus.com

54. Residual Responses: 8560E/EC

Instrument Under Test

8560E/EC

Related Specification

Residual Responses

Related Adjustment

There is no related adjustment for this performance test.

Description

This test checks for residual responses. Any response located above the display line is measured in a narrow frequency span and resolution bandwidth. The spectrum analyzer INPUT 50 Ω is terminated in 50 Ω

Equipment

Coaxial 50 Ω termination Agilent 909D

Adapters

Type N (m) to APC 3.5 (f)1250-1744

Type N (m) to BNC (f)1250-1476

Type N (f) to APC 3.5 (f)1250-1745

Cable

BNC, 122 cm (48 in.) Agilent 10503A

ManualsPlus.com

Procedure

1. On the spectrum analyzer, press **PRESET**. Set the controls as follows:

   Center frequency . . . . . 300 MHz

   Span . . . . . 10 kHz

   Resolution BW . . . . . 300 Hz

   Reference level . . . . . –10 dBm

   Attenuation. . . . . 0 dB

2. On the spectrum analyzer, connect a BNC cable between CAL OUTPUT and INPUT 50 Ω. Press **PEAK SEARCH**, **CAL, REF LEVEL ADJ**. Use the data entry knob or the step keys to change the REF LEVEL CAL value until the marker amplitude reads –10.00 dBm ±0.17 dB.

Residual Responses

3. Remove the BNC cable and adapter from INPUT 50 Ω. Install the type N-to-APC 3.5 adapter and 50 Ω termination on INPUT 50 Ω. Press **PRESET**. Set the controls as follows:

   Center frequency . . . . . 15.2 MHz

   Span . . . . . 30 MHz

   Center frequency step . . . . . 28.5 MHz

   Reference level . . . . . –50 dBm

   Attenuation. . . . . 0 dB

   Resolution BW . . . . . 10 kHz

   Trigger . . . . . Single

   Display line . . . . . –90 dBm

4. Press **SGL SWP** to trigger a sweep. The noise level should be at least 6 dB below the display line. If it is not, it will be necessary to reduce SPAN and RES BW to reduce the noise level. If SPAN is reduced, reduce CF STEP to no more than 95% of SPAN.

5. If a residual is suspected, press **SGL SWP** again. A residual response will persist, but a noise peak will not. Make a note of the frequency and amplitude of any responses above the display line.

ManualsPlus.com

6. If a response is marginal, verify the response amplitude as follows:
   a. Press **SAVE**, **SAVE STATE, STATE 0**.
   b. Press **MKR**. Place the marker on the peak of the response in question.
   c. Press **MKR** → and **MARKER** → **CF**.
   d. Press **SPAN**, ⇓, ⇓, ⇓, ⇓, **TRIG, SWEEP CONT**, **PEAK SEARCH, MARKER** → **CF**.
   e. Press **BW, RES BW, AUTO**.
   f. Continue to reduce SPAN until a RES BW of 300 Hz is reached. If the response is a synthesis-related residual, it might disappear as SPAN is reduced. If this is the case, measure the amplitude with the narrowest span possible and a 300 Hz RES BW.
7. Check for residuals up to 2.9 GHz, following steps 4 through 6. To change the center frequency, press **FREQUENCY**, **CENTER FREQ**, ⇑.

ManualsPlus.com

55. Residual Responses: Agilent 8561E/EC

Instrument Under Test

Agilent 8561E/EC

Related Specification

Residual Responses

Related Adjustment

There is no related adjustment for this performance test.

Description

This test checks for residual responses from 200 kHz to 6.5 GHz. Any response located above the display line is measured in a narrow frequency span and resolution bandwidth. The spectrum analyzer INPUT 50 Ω is terminated in 50 Ω.

Equipment

Coaxial 50 Ω termination . . . . . Agilent 909D

Adapters

Type N (m) to APC 3.5 (f) 1250-1744

Type N (m) to BNC (f) 1250-1476

Type N (f) to APC 3.5 (f) 1250-1745

Cable

BNC, 122 cm (48 in.) . . . . . Agilent 10503A

ManualsPlus.com

Procedure

1. On the spectrum analyzer, press **PRESET**. Set the controls as follows:

   Center frequency . . . . . 300 MHz

   Span . . . . . 10 kHz

   Resolution BW . . . . . 300 Hz

   Reference level . . . . . –10 dBm

   Attenuation . . . . . 0 dB

2. On the spectrum analyzer, connect a BNC cable between CAL OUTPUT and INPUT 50 Ω. Press **PEAK SEARCH, CAL, REF LEVEL ADJ**. Use the data entry knob or the step keys to change the REF LEVEL CAL value until the marker amplitude reads –10.00 dBm ±0.17 dB.

   Residual Responses, Band 0

3. Remove the BNC cable and adapter from INPUT 50 Ω. Install the type N-to-APC 3.5 adapter and 50 Ω termination on INPUT 50 Ω. Press **PRESET**. Set the controls as follows:

   Center frequency . . . . . 15.2 MHz

   Span . . . . . 30 MHz

   Center frequency step . . . . . 28.5 MHz

   Reference level . . . . . –50 dBm

   Attenuation . . . . . 0 dB

   Resolution BW . . . . . 10 kHz

   Trigger . . . . . Single

   Display line . . . . . –90 dBm

4. Press **SGL SWP** to trigger a sweep. The noise level should be at least 6 dB below the display line. If it is not, it will be necessary to reduce SPAN and RES BW to reduce the noise level. If SPAN is reduced, reduce CF STEP to no more than 95% of SPAN.

5. If a residual is suspected, press **SGL SWP** again. A residual response will persist, but a noise peak will not. Make a note of the frequency and amplitude of any responses above the display line.

ManualsPlus.com

6. If a response is marginal, verify the response amplitude as follows:
   a. Press **SAVE, SAVE STATE, STATE 0**.
   b. Press **MKR**. Place the marker on the peak of the response in question.
   c. Press **MKR** → and **MARKER** → **CF**.
   d. Press **SPAN,** ⇓, ⇓, ⇓, ⇓, **TRIG**, **SWEEP CONT, PEAK SEARCH, MARKER** → **CF**.
   e. Press **BW, RES BW AUTO**.
   f. Continue to reduce SPAN until a RES BW of 300 Hz is reached. If the response is a synthesis-related residual, it might disappear as SPAN is reduced. If this is the case, measure the amplitude with the narrowest span possible and a 300 Hz RES BW.
7. Check for residuals up to 2.9 GHz, following steps 4 through 6. To change the center frequency, press **FREQUENCY, CENTER FREQ,** ⇑.

Residual Responses, Band 1

8. On the spectrum analyzer, press **FREQUENCY, CENTER FREQ**, 2.915, **GHz**.
9. Check for residuals from 2.9 GHz to 6.5 GHz, following steps 4 though 6. To change the center frequency, press **CENTER FREQ,** ⇑.

ManualsPlus.com

56. Residual Responses: Agilent 8562E/EC, Agilent 8563E/EC, Agilent 8564E/EC, Agilent 8565E/EC

Instrument Under Test

Agilent 8562E/EC
Agilent 8563E/EC
Agilent 8564E/EC
Agilent 8565E/EC

Related Specification

Residual Responses

Related Adjustment

There is no related adjustment for this performance test.

Description

This test checks for residual responses in Bands 0 and 1 (N = 1). Any response located above the display line is measured in a narrow frequency span and resolution bandwidth. The spectrum analyzer INPUT 50 Ω is terminated in 50 Ω.

Equipment

Coaxial 50 Ω termination . . . . . Agilent 909D

(Agilent Agilent 8563E/EC only)

Coaxial 50 Ω termination . . . . . Agilent 85138B

(Agilent 8564E/EC or 8565E/EC only)

Adapters

Type N (m) to APC 3.5 (f). 1250-1744

(Agilent 8563E/EC only)

Type N (m) to BNC (f) 1250-1476

Type N (f) to 2.4 mm (f) . . . . . Agilent 11903B

(Agilent 8564E/EC or 8565E/EC only)

ManualsPlus.com

Cable

BNC, 122 cm (48 in.) . . . . . Agilent 10503A

Procedure

1. On the spectrum analyzer, press **PRESET**. Set the controls as follows:

   Center frequency . . . . . 300 MHz

   Span . . . . . 10 kHz

   Resolution BW . . . . . 300 Hz

   Reference level . . . . . –10 dBm

   Attenuation. . . . . 0 dB

2. On the spectrum analyzer, connect a BNC cable between CAL OUTPUT and INPUT 50 Ω. Press **PEAK SEARCH**, **CAL**, **REF LEVEL ADJ**. Use the data entry knob or the step keys to change the REF LEVEL CAL value until the marker amplitude reads –10.00 dBm ±0.17 dB.

Residual Responses, Band 0

3. Remove the BNC cable and adapter from INPUT 50 Ω. Install the 50 Ω termination on INPUT 50 Ω, using an adapter if necessary. Press **PRESET**. Set the controls as follows:

   Center frequency . . . . . 15.2 MHz

   Center frequency step . . . . . 28.5 MHz

   Span . . . . . 30 MHz

   Reference level . . . . . –50 dBm

   Attenuation. . . . . 0 dB

   Resolution BW . . . . . 10 kHz

   Trigger . . . . . Single

   Display line . . . . . –90 dBm

4. Press **SGL SWP** to trigger a sweep. The noise level should be at least 6 dB below the display line. If it is not, it will be necessary to reduce SPAN and RES BW to reduce the noise level. If SPAN is reduced, reduce CF STEP to no more than 95% of SPAN.

5. If a residual is suspected, press **SGL SWP** again. A residual response will persist, but a noise peak will not. Make a note of the frequency and amplitude of any responses above the display line.

ManualsPlus.com

6. If a response is marginal, verify the response amplitude as follows:
   a. Press **SAVE, SAVE STATE, STATE 0**.
   b. Press **MKR**. Place the marker on the peak of the response in question.
   c. Press **MKR** → and **MARKER** → **CF**.
   d. Press **SPAN,** ⇓, ⇓, ⇓, ⇓, **TRIG, SWEEP CONT, PEAK SEARCH, MARKER** → **CF**.
   e. Press **BW, RES BW AUTO**.
   f. Continue to reduce SPAN until a RES BW of 300 Hz is reached. If the response is a synthesis-related residual, it might disappear as SPAN is reduced. If this is the case, measure the amplitude with the narrowest span possible and a 300 Hz RES BW.
7. Check for residuals up to 2.9 GHz, following steps 4 through 6. To change the center frequency, press **FREQUENCY, CENTER FREQ,** ⇑.

Residual Responses, Band 1

8. On the spectrum analyzer, press **FREQUENCY**, **CENTER FREQ**, 2.915, **GHz**.
9. Check for residuals from 2.9 GHz to 6.46 GHz, following steps 4 though 6. To change the center frequency, press **CENTER FREQ,** ⇑.

ManualsPlus.com

57. IF INPUT Amplitude Accuracy

Instrument Under Test

All 8560 E-Series and EC-Series

NOTE Option 002 and Option 327 do not have external mixer capability, so the IF input test should not be included for instruments with either of these two options.

Related Specification

IF INPUT Amplitude Accuracy

Related Adjustment

External Mixer Amplitude Adjustment

Description

The user-loaded conversion losses for K-band are recorded and reset to 30 dB. A 310.7 MHz signal is applied to the IF INPUT. The power level of the source is adjusted for a signal at the reference level. The power applied to the spectrum analyzer is measured with a power meter. The previously recorded conversion losses are reentered.

Figure 10-67 IF Input Amplitude Test Setup

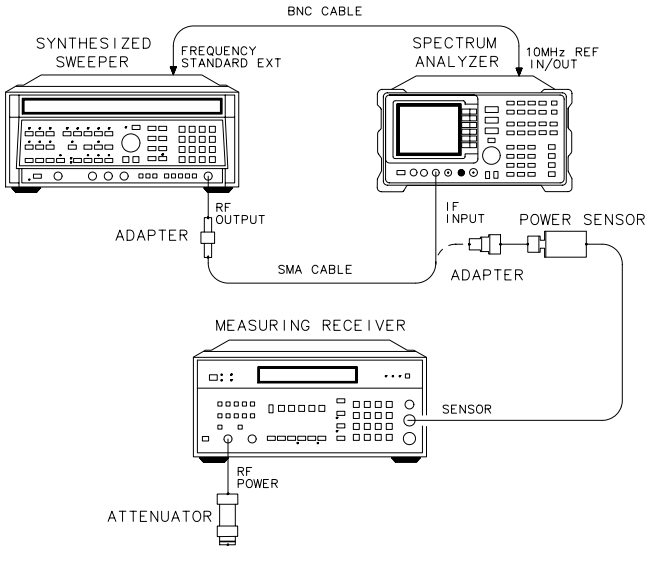

ManualsPlus.com

Equipment

Synthesized sweeper . . . . . .Agilent 8340A/B

Measuring receiver . . . . . Agilent 8902A

Power sensor. . . . . Agilent 8484A

50 MHz reference attenuator . . . . . Agilent 11708A

(supplied with Agilent 8484A)

Adapters

Type N (f) to SMA (f) 1250-1772

APC 3.5 (f) to APC 3.5 (f). 5061-5311

Cables

BNC, 122 cm (48 in.) . . . . . Agilent 10503A

SMA, 61 cm (24 in.) 8120-1578

Procedure

1. Connect the equipment as shown in Figure 10-67. The spectrum analyzer provides the frequency reference for the Agilent 8340A/B.
2. On the spectrum analyzer, press **PRESET, CONFIG, EXT MXR UNPR,** then press **AMPLITUDE, LOG dB/DIV,** 1, **dB**. Press **MKR, AUX CTRL, EXTERNAL MIXER**. Press **SPAN, ZERO SPAN**, then **AUX CTRL, EXTERNAL MIXER, AMPTD CORRECT, CNV LOSS VS FREQ**.
3. Note the conversion loss displayed in the active function block. Use ⇑ and ⇓ to step through the conversion losses for the other frequencies. If all conversion losses are 30.0 dB, proceed to step 9.
4. Press **CNV LOSS VS FREQ**.
5. Record the 18 GHz conversion loss in Table 10-99.
6. Enter a conversion loss of 30 dB.
7. Press ⇓.
8. Repeat steps 5 through 7 for the remaining frequencies listed in Table 10-99.
9. On the Agilent 8340A/B, press **INSTR PRESET**.

   CW frequency . . . . . .310.7 MHz

   Power level . . . . . –30 dBm

ManualsPlus.com

10. Zero and calibrate the Agilent 8902A/8484A combination in log mode. Enter the power sensor 50 MHz calibration factor into the Agilent 8902A.
11. On the Agilent 8340A/B, adjust the power level until the marker amplitude reads 0 dBm ±0.05 dB.
12. Disconnect the SMA cable from the spectrum analyzer IF INPUT, and connect the cable, through an adapter, to the power sensor.
13. Read the power displayed on the Agilent 8902A. Record the value here:

IF INPUT amplitude:_____ dBm

NOTE The following steps should be performed only if it is necessary to change the conversion loss values found in step 5.

14. On the spectrum analyzer, press **CNV LOSS VS FREQ**.
15. Enter the conversion loss at 18 GHz, as recorded in Table 10-99.
16. Press ⇑.
17. Repeat steps 15 and 16 for the remaining frequencies listed in Table 10-99.

Table 10-99 IF Input Amplitude Accuracy

Frequency (GHz)	Conversion Loss (dB)
18	
20	
22	
24	
26	
27	

ManualsPlus.com

58. Gate Delay Accuracy and Gate Length Accuracy

Instrument Under Test

All 8560 E-Series and EC-Series

Related Specifications

Gate Delay Accuracy
Gate Length Accuracy

Related Adjustment

There is no related adjustment for this performance test.

Description

The method used for measuring gate length times is determined by the length of the gate. Shorter gate-length times are measured with an oscilloscope and longer gate-length times are measured with a counter.

For shorter gate-length times, the output signal of a pulse generator is used to trigger the gate circuitry. To measure the gate delay, delta t markers are used. There is often up to 1 µs of jitter due to the 1 µs resolution of the gate delay clock. The “define measure” feature of the oscilloscope is used to measure and calculate the average length of the gate output automatically.

For longer gate-length times, a counter is used to measure the time period from the rising edge of the gate output to its falling edge. Measuring the gate length accuracy also verifies the gate delay accuracy since both the gate-length accuracy and gate delay accuracy are a function of the same spectrum analyzer CPU clock accuracy.

Figure 10-68 Gate Delay and Gate Length Accuracy Test Setup

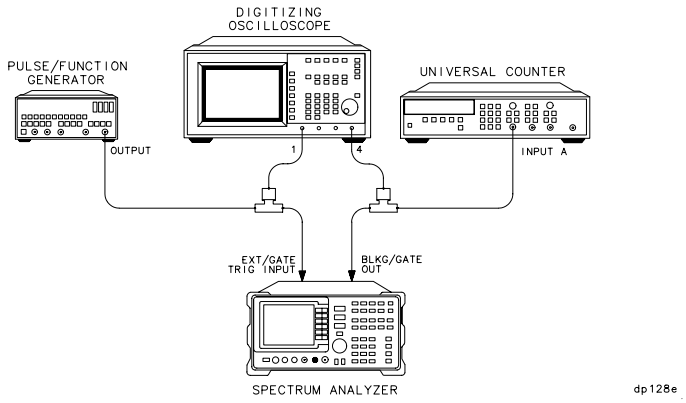

ManualsPlus.com

Equipment

Universal counter . . . . . Agilent 5334A/B

Pulse/function generator. . . . . Agilent 8116A

Digitizing oscilloscope . . . . . Agilent 54501A

Cable

BNC, 120 cm (48 in.) *(4 required)*. . . . . Agilent 10503A

Adapter

BNC tee (m) (f) (f) *(2 required)* 1250-0781

Procedure

Determine Small Gate Delay and Gate Length (jitter-term)

1. Connect the equipment as shown in Figure 10-68. Connect BNC Tees directly to the oscilloscope input to reduce “ringing.”
2. Press **PRESET** on the spectrum analyzer. Set the spectrum analyzer controls as follows:

   Span . . . . . 0 Hz

   Sweep time . . . . . 50 ms

   Gate. . . . . on

   Gate delay. . . . . 3 µs

   Gate length . . . . . 1 µs
3. Activate the square wave output on the pulse/function generator.
4. Set the pulse/function generator controls as follows:

   Mode . . . . . Normal

   Frequency . . . . . 100 Hz

   Duty cycle 50%

   HIL . . . . . 2.5 V

   LOL . . . . . 0.0 V

   Disable . . . . . off

ManualsPlus.com

5. Press the following keys on the oscilloscope:

   RECALL, **CLEAR**

   CLEAR DISPLAY

   DISPLAY

   off frame axes grid. . . . . highlight **grid**

   connect dots off on . . . . . highlight **on**

   TRIG

   source 1 2 3 4 . . . . . highlight **4**

   level. . . . . 2 V

   TIMEBASE

   TIMEBASE . . . . . 1 µs/div

   CHAN

   CHANNEL 1 2 3 4 off on

   highlight **CHANNEL 1 on**

   set V/div to 1 V and offset to 2 V

   highlight **CHANNEL 4 on**

   set V/div to 1 V and offset to 3 V

   DISPLAY

   DISPLAY norm avg env . . . . . highlight **env**

6. Press **CLEAR DISPLAY** on the oscilloscope. Wait for the trace to fill in as shown in Figure 10-69. Press **Δt ΔV, Δt markers off on** highlight **on**, **stop marker**, 0, **µs**.

Record Minimum and Maximum Gate Delay Values

7. On the oscilloscope, press **start marker**. Use the knob to position the start marker on the right-hand rising edge of the upper trace. See Figure 10-69.

8. Record the delta t marker reading as the MIN gate delay.

   MIN gate delay:_____ µs

ManualsPlus.com

Figure 10-69 Measuring MIN Gate Delay

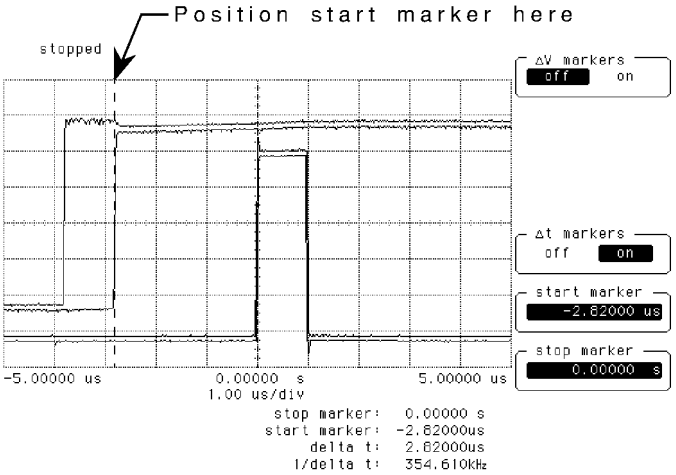

mingate

9. Use the oscilloscope knob to position the start marker on the left-hand rising edge of the upper trace. See Figure 10-70.

10. Record the delta t marker reading as the MAX gate delay.

MAX gate delay: _____ µs

Figure 10-70 Measuring MAX Gate Delay

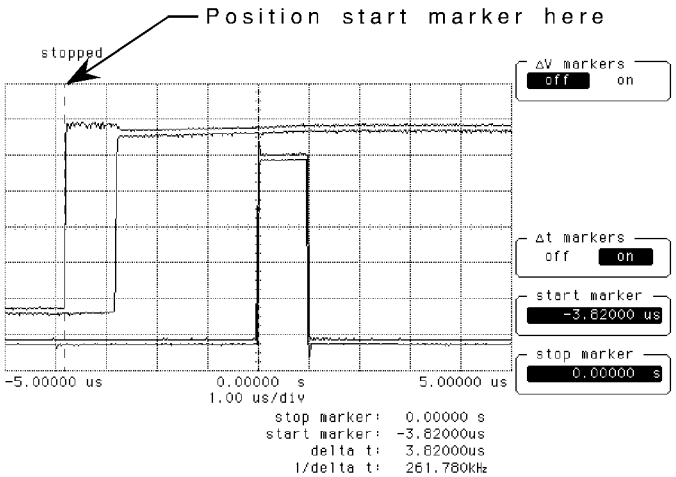

maxgate

ManualsPlus.com

Determine Small Gate Length

11. On the oscilloscope, press **DISPLAY** and **norm avg env** so that “norm” is highlighted. Then press **TIMEBASE, TIMEBASE**, 500, **ns, BLUE, +WIDTH**, 4 (measure pulse width on CHANNEL 4), **DEFINE MEAS, CONTINUOUS ON**. Press **statistics off on** so that “on” is highlighted.
12. Read the average +width (4) displayed on the oscilloscope in the bottom right-hand annotation area. See Figure 10-71.
13. Record the average +width (4) value as the 1 µs gate length.

1 µs gate length: _____ ns

Figure 10-71 Measuring Small Gate Length

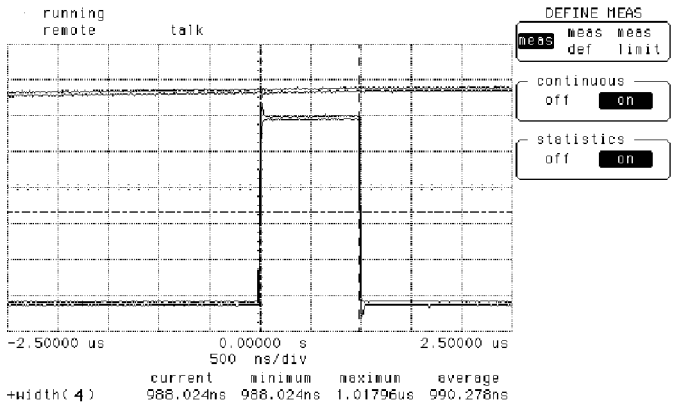

smllgate

Determine Large Gate Length (CPU Clock Accuracy Term)

14. Set the spectrum analyzer controls as follows:

    Sweep time . . . . . 150 ms

    Gate delay . . . . . 10 ms

    Gate length . . . . . 65 ms

15. Turn the power to the universal counter off and back on. Press **COM A**, **TI A → B**. Set the controls as follows:

    Automatic Trigger . . . . . Off

    100 kHz filter A . . . . . On

    Sense . . . . . Off

16. Set the universal counter controls as follows:

ManualsPlus.com

Input A

×10 . . . . . off

AC . . . . . off

50 Ω Z . . . . . off

Slope . . . . . off (rising edge)

Trigger level/sense . . . . . Fully CCW

Input B

× 10 . . . . . off

AC . . . . . off

50 Ω Z . . . . . off

Slope . . . . . on (falling edge)

Trigger level/sense . . . . . Fully CCW

17. Rotate the INPUT A trigger level/sense control clockwise until the LED next to the control begins to flash.

18. Rotate the INPUT B trigger level/sense control clockwise until the LED next to the control begins to flash.

19. Record the universal counter reading as the 65 ms gate length.

65 ms gate length:_____ ms

ManualsPlus.com

59. Delayed Sweep Accuracy

Instrument Under Test

All 8560 E-Series and EC-Series

Related Specification

Delayed Sweep Accuracy

Related Adjustments

There is no related adjustment for this performance test.

Description

A universal counter is used to measure the time interval between the rising edge of an external trigger input signal and the falling edge of the blanking output signal. The external trigger signal is a 1 Hz square wave. The measurement is made at several delayed sweep settings.

Figure 10-72 Delayed Sweep Accuracy Test Setup

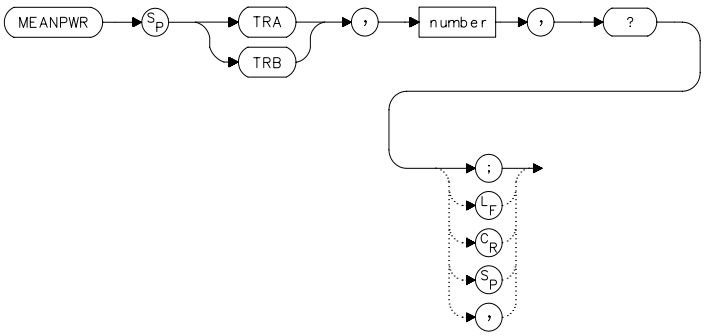

Equipment

Universal counter. . . . . .Agilent 5334A/B

Pulse/function generator . . . . . Agilent 8116A

Cable

BNC, 120 cm (48 in.) *(3 required)* . . . . . Agilent 10503A

ManualsPlus.com

Adapter

BNC tee (m) (f) (f) 1250-0781

Procedure

1. Connect the equipment as shown in Figure 10-72. Connect the BNC Tee directly to the universal counter input to reduce reflections.
2. Press **PRESET** on the spectrum analyzer. Set the spectrum analyzer controls as follows:

   Span . . . . . 0 Hz

   SWEEPTIME . . . . . 50 ms

   Delay sweep . . . . . on

   Delay sweep . . . . . 1 ms

   Trigger . . . . . External
3. Activate the square wave output on the pulse/function generator.
4. Set the pulse/function generator controls as follows:

   Mode . . . . . Normal

   Frequency . . . . . 1 Hz

   Duty cycle 50%

   HIL . . . . . 2.5 V

   LOL . . . . . 0.0 V
5. Turn the power to the universal counter off and back on. Press **TI A** → **B**. Set the controls as follows:

   Automatic Trigger . . . . . Off

   100 kHz filter A . . . . . On

   Sense . . . . . Off
6. Set the universal counter controls as follows:

   Input A

   ×10 . . . . . off

   AC . . . . . off

   50 Ω Z . . . . . off

   Slope . . . . . off (rising edge)

   Trigger level/sense . . . . . Fully CCW

ManualsPlus.com

Input B

× 10 . . . . . off

AC . . . . . off

50 Ω Z . . . . . off

Slope . . . . . .on (falling edge)

Trigger level/sense . . . . . .Fully CCW

7. Rotate the INPUT A trigger level/sense control clockwise until the LED next to the control begins to flash.
8. Rotate the INPUT B trigger level/sense control clockwise until the LED next to the control begins to flash.
9. Record the universal counter reading in Table 10-100 as the Delay for the 1 ms DELAY SWEEP setting.
10. Set the spectrum analyzer to each of the DELAY SWEEP settings in Table 10-100. Repeat step 10 for each DELAY SWEEP setting.

Table 10-100 Delayed Sweep Accuracy

DELAY SWEEP Setting (µs)	Delay (µs)	Measurement Uncertainty (ns)
1000		±114
2000		±124
5000		±154
10000		±204
20000		±304
50000		±604
65000		±754

ManualsPlus.com

60. Tracking Generator Level Flatness

Instrument Under Test

8560E/EC (Option 002)

Related Specification

Tracking Generator Level Flatness

Related Adjustment

There is no related adjustment for this performance test.

Description

The tracking generator RF OUT 50 Ω is connected to the spectrum analyzer INPUT 50 Ω. Tracking is adjusted at 300 MHz for a maximum signal level. A calibrated power sensor is then connected to the tracking generator output to measure the power level at 300 MHz. The measuring receiver is set to ratio mode so that future power level readings are dB relative to the power level at 300 MHz.

The tracking generator is stepped to several frequencies throughout its range. The output power difference relative to the power level at 300 MHz is measured at each frequency and recorded.

Figure 10-73 Tracking Generator Level Flatness Test Setup

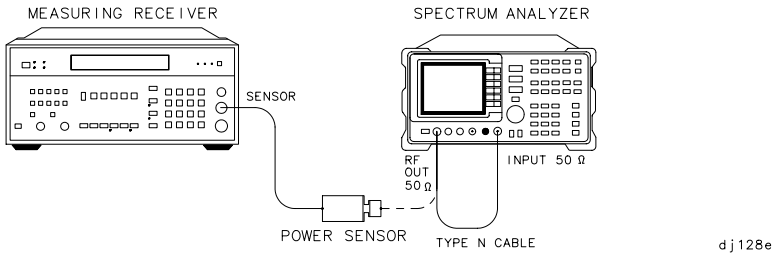

Equipment

Measuring receiver . . . . . Agilent 8902A

Power sensor . . . . . Agilent 8482A

Cable

Type N, 62 cm (24 in.) . . . . . Agilent 11500B/C

ManualsPlus.com

Procedure

1. Connect the type N cable between the spectrum analyzer RF OUT 50 Ω and INPUT 50 Ω connectors. See Figure 10-73.
2. Press **PRESET** on the spectrum analyzer and set the controls as follows:

   Center frequency . . . . . 300 MHz

   Center frequency step . . . . . 100 MHz

   Span . . . . . 0 Hz
3. On the spectrum analyzer, press **MKR**, **AUX CTRL,** and **TRACKING GENRATOR**. Press **SRC PWR ON,** 5, –**dBm**.
4. On the spectrum analyzer, press **MORE 1 OF 3**, **TRACKING PEAK**. Wait for the PEAKING message to disappear.
5. Zero and calibrate the measuring receiver and power sensor combination in log mode (for power level readouts in dBm). Enter the power sensor 300 MHz cal factor into the measuring receiver.
6. Remove the type-N cable from the RF OUT 50 Ω and connect the power sensor to the RF OUT 50 Ω.
7. On the spectrum analyzer, press **MORE 2 OF 3**, **MORE 3 OF 3**, 0, **dBm,** and **SGL SWP**.
8. Press RATIO on the measuring receiver. The measuring receiver will now readout power levels relative to the power level at 300 MHz.
9. Set the spectrum analyzer center frequency to 300 kHz. Press **SGL SWP**.
10. Enter the appropriate power sensor cal factor into the measuring receiver as indicated in Table 10-101.
11. Record the power level displayed on the measuring receiver as the flatness in Table 10-101.
12. Repeat steps 9 through 11 above to measure the flatness at each center frequency setting listed in Table 10-101. If desired, use ⇓ to tune to center frequencies above 100 MHz.
13. Record the most positive flatness reading in Table 10-101 as the maximum flatness.

    Maximum flatness:_____ dB

14. Record the most negative flatness reading in Table 10-101 as the minimum flatness.

    Minimum flatness: _____ dB

ManualsPlus.com

Table 10-101 Flatness Relative to 300 MHz

Center Frequency	Flatness (dB)	CAL Factor Frequency (MHz)	Measurement Uncertainty (dB)
300 kHz		0.3	+0.28/–0.28
500 kHz		0.3	+0.28/–0.28
1 MHz		1.0	+0.28/–0.28
2 MHz		3.0	+0.28/–0.28
5 MHz		3.0	+0.28/–0.28
10 MHz		10	±0.155
20 MHz		30	±0.155
50 MHz		50	±0.144
100 MHz		100	±0.161
200 MHz		300	±0.161
300 MHz		300	±0.161
400 MHz		300	±0.157
500 MHz		300	±0.157
600 MHz		300	±0.157
700 MHz		1000	±0.157
800 MHz		1000	±0.157
900 MHz		1000	±0.157
1000 MHz		1000	±0.157
1100 MHz		1000	±0.157
1200 MHz		1000	±0.157
1300 MHz		1000	±0.157
1400 MHz		1000	±0.157
1500 MHz		2000	±0.157
1600 MHz		2000	±0.157
1700 MHz		2000	±0.157
1800 MHz		2000	±0.157
1900 MHz		2000	±0.157
2000 MHz		2000	+0.41/–0.41

ManualsPlus.com

Table 10-101 Flatness Relative to 300 MHz (Continued)

Center Frequency	Flatness (dB)	CAL Factor Frequency (MHz)	Measurement Uncertainty (dB)
2100 MHz		2000	+0.41/–0.41
2200 MHz		2000	+0.41/–0.41
2300 MHz		2000	+0.41/–0.41
2400 MHz		2000	+0.41/–0.41
2500 MHz		3000	+0.41/–0.41
2600 MHz		3000	+0.41/–0.41
2700 MHz		3000	+0.41/–0.41
2800 MHz		3000	+0.41/–0.41
2900 MHz		3000	+0.41/–0.41

ManualsPlus.com

61. Absolute Amplitude and Vernier Accuracy

Instrument Under Test

8560E/EC (Option 002)

Related Specification

Absolute Amplitude Accuracy
Vernier Accuracy

Related Adjustment

Tracking Generator Power Level Adjustments

Description

The tracking generator RF OUT 50 Ω is connected to the spectrum analyzer INPUT 50 Ω. Tracking is adjusted at 300 MHz for a maximum signal level. A calibrated power sensor is then connected to the tracking generator output to measure the power level at 300 MHz.

The measuring receiver is set to ratio mode so that future power level readings are in dB relative to the power level at 300 MHz. The output power level setting is decreased in 1 dB steps and the power level is measured at each step. The difference between the ideal and actual power levels is calculated at each step. The step-to-step error is calculated as well.

Figure 10-74 Absolute Amplitude and Vernier Accuracy Test Setup

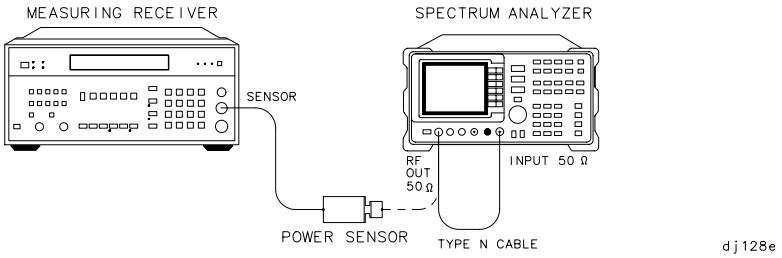

Equipment

Measuring receiver . . . . . Agilent 8902A

Power sensor . . . . . Agilent 8482A

ManualsPlus.com

Cable

Type N, 62 cm (24 in.) . . . . . .Agilent 11500B/C

Procedure

1. Connect the type N cable between the spectrum analyzer RF OUT 50 Ω and INPUT 50 Ω connectors. See Figure 10-74.
2. Press **PRESET** on the spectrum analyzer and set the controls as follows:

   Center frequency . . . . . 300 MHz

   Span . . . . . 0 Hz
3. On the spectrum analyzer, press **MKR, AUX CTRL,** and **TRACKING GENERATOR**. Press **SRC PWR ON**, 5, –**dBm**.
4. On the spectrum analyzer, press **MORE 1 OF 3, TRACKING PEAK**. Wait for the PEAKING message to disappear.
5. Zero and calibrate the measuring receiver and power sensor combination in log mode (for power level readouts in dBm). Enter the power sensor 300 MHz cal factor into the measuring receiver.
6. Remove the type-N cable from the RF OUT 50 Ω and connect the power sensor to the RF OUT 50 Ω
7. On the spectrum analyzer, press **MORE 2 OF 3, MORE 3OF 3**, 0, **dBm,** and **SGL SWP**.
8. Record the power level displayed on the measuring receiver as the absolute amplitude accuracy:

   Absolute amplitude accuracy: _____ dB

   (Measurement uncertainty: <±0.154 dB)
9. Press RATIO on the measuring receiver to make power level readouts relative to the power level just measured at the 0 dBm output power level setting.
10. Set the displayed TRK GEN RF POWER to the settings indicated in Table 10-102. Record the power level displayed on the measuring receiver for each of the settings.
11. Calculate the absolute vernier accuracy by subtracting the tracking generator RF power setting from the measured power level for each tracking generator RF power setting listed in Table 10-102.

    Absolute vernier accuracy = measured power level – TRK GEN RF POWER
12. Record the absolute vernier accuracy for the +1 dBm TRK GEN RF POWER setting as the corresponding step-to-step accuracy.

ManualsPlus.com

13. Calculate the step-to-step accuracy for the –1 dBm to –10 dBm TRK GEN RF POWER settings by subtracting the previous absolute vernier accuracy from the current absolute vernier accuracy.

14. Locate the most positive and most negative absolute vernier accuracy values in Table 10-102 and record them below:

Positive absolute vernier accuracy:_____ dB

Negative absolute vernier accuracy:_____ dB

15. Locate the most positive and most negative step-to-step accuracy values in Table 10-102 and record them below:

Positive step-to-step accuracy: _____ dB

Negative step-to-step accuracy: _____ dB

Table 10-102 Vernier Accuracy

TRK GEN RF POWER (dBm)	Measured Power Level (dB)	Absolute Vernier Accuracy (dB)	Step-to-Step Accuracy (dB)	Measurement Uncertainty (dB)
0	0 (Ref.)	0 (Ref.)	0 (Ref.)	0
+1				±0.033
0	0 (Ref.)	0 (Ref.)	0 (Ref.)	0
–1				±0.033
–2				±0.033
–3				±0.033
–4				±0.033
–5				±0.033
–6				±0.033
–7				±0.033
–8				±0.033
–9				±0.033
–10				±0.033

ManualsPlus.com

62. Maximum Leveled Output Power

Instrument Under Test

8560E/EC (Option 002)

Related Specification

Maximum Leveled Output Power

Related Adjustment

Tracking Generator Power Level Adjustments

Description

The tracking generator RF OUT 50 Ω is connected to the spectrum analyzer INPUT 50 Ω. Tracking is adjusted at 300 MHz for a maximum signal level.

The tracking generator is stepped to several frequencies throughout its range. At each frequency, the power level is increased until the output goes unleveled or until a setting of +2.8 dBm is reached. If the output has gone unleveled, the power is decreased just enough to make the output leveled again. The power level setting is recorded.

Figure 10-75 Maximum Leveled Output Power Test Setup

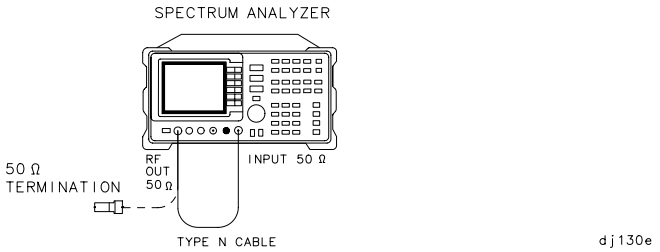

Equipment

50 Ω termination . . . . . Agilent 908A

Cable

Type N, 62 cm (24 in.) . . . . . .Agilent 11500B/C

ManualsPlus.com

Procedure

1. Connect the type-N cable between the spectrum analyzer RF OUT 50 Ω and INPUT 50 Ω connectors. See Figure 10-75.
2. Press **PRESET** on the spectrum analyzer and set the controls as follows:

   Center frequency . . . . . 300 MHz

   Span . . . . . 0 Hz
3. On the spectrum analyzer, press **MKR, AUX CTRL,** and **TRACKING GENERATOR**. Press **SRC PWR ON,** 5, –**dBm**.
4. On the spectrum analyzer, press **MORE 1 OF 3, TRACKING PEAK**. Wait for the `PEAKING` message to disappear.
5. Remove the type-N cable from the RF OUT 50 Ω and connect the 50 Ω termination to the RF OUT 50 Ω. See Figure 10-75.
6. On the spectrum analyzer, press **MORE 2 OF 3, MORE 3 OF 3,** 0, **dBm**.
7. Set the spectrum analyzer center frequency to 300 kHz, press **SGL SWP**.
8. Press **AUX CTRL, TRACKING GENERATOR**. Use the knob to increase the `TRK GEN RF POWER` setting until either the `ERR 900 TG UNLVL` message is displayed or the `TRK GEN RF POWER` setting reaches +2.8 dBm (the maximum power level setting).
9. If the `ERR 900 TG UNLVL` message is displayed, reduce the power level in 0.1 dB increments until it disappears.
10. Record the `TRK GEN RF POWER` value in Table 10-103 as the maximum leveled output power.
11. Set the `TRK GEN RF POWER` to 0 dBm.
12. Repeat steps 8 through 11 above for the remaining frequencies listed in Table 10-103.
13. Record below the lowest power level recorded in Table 10-103 under maximum leveled output power:

    Maximum leveled output power (min.):_____ dB

ManualsPlus.com

Table 10-103 Maximum Leveled Output Power

Center Frequency	Maximum Leveled Output Power (dBm)
300 kHz	
5 MHz	
50 MHz	
100 MHz	
300 MHz	
900 MHz	
1200 MHz	
1500 MHz	
2000 MHz	
2500 MHz	
2900 MHz	

ManualsPlus.com

63. Power Sweep Range

Instrument Under Test

8560E/EC (Option 002)

Related Specification

Power Sweep Range

Related Adjustment

Tracking Generator Power Level Adjustments

Description

The tracking generator RF OUT 50 Ω is connected to the spectrum analyzer INPUT 50 Ω through a power splitter. The tracking generator is adjusted at 300 MHz for a maximum signal level. A measuring receiver is connected to the other output of the power splitter. The tracking generator is set to do a power sweep from –10 dBm to +1 dBm.

The markers are used to measure the displayed amplitude at the beginning and end of the sweep. The power sweep is then turned off and the tracking generator power level is adjusted to bring the displayed amplitude equal to the amplitude level at the start of the sweep. This power level is measured on the measuring receiver and recorded. The tracking generator power level is adjusted to bring the displayed amplitude equal to the amplitude level at the end of the sweep. This power level is measured and recorded. The difference between the two measured power levels is calculated and recorded.

Figure 10-76 Power Sweep Range Test Setup

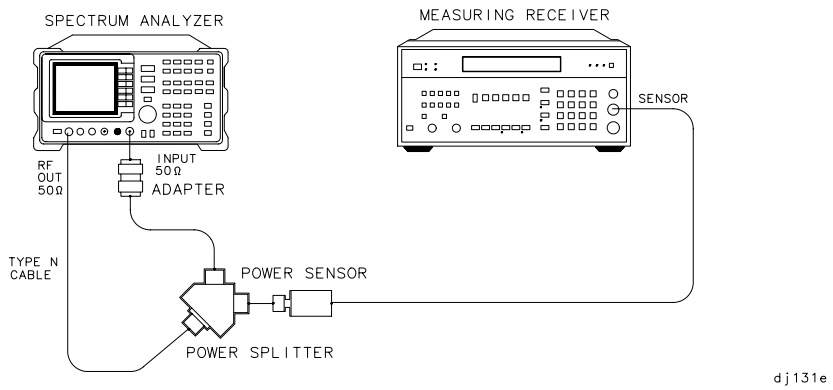

ManualsPlus.com

Equipment

Measuring receiver . . . . . Agilent 8902A

Power sensor. . . . . Agilent 8482A

Power splitter . . . . . Agilent 11667A

Adapter

Type N (m) to type N (m). 1250-1475

Cable

Type N, 62 cm (24 in.) . . . . . .Agilent 11500B/C

Procedure

1. Connect the equipment as shown in Figure 10-76. Do not connect the power sensor to the power splitter at this time.
2. Press **PRESET** on the spectrum analyzer and set the controls as follows:

   Center frequency . . . . . 300 MHz

   Span . . . . . 0 Hz
3. On the spectrum analyzer, press **MKR, AUX CTRL,** and **TRACKING GENERATOR**. Press **SRC PWR ON**, 5, –**dBm**.
4. On the spectrum analyzer, press **MORE 1 OF 3**, **TRACKING PEAK**. Wait for the PEAKING message to disappear.
5. Zero and calibrate the measuring receiver and power sensor combination in log mode (for power level readouts in dBm). Enter the power sensor 300 MHz cal factor into the measuring receiver. Connect the power sensor to the power splitter as shown in Figure 10-76.
6. On the spectrum analyzer, press **MORE 2 OF 3, MORE 3 OF 3,** 10, –**dBm**, **MORE 1 OF 3, MORE 2 OF 3**, then press **PWR SWP ON**, 11, **dB**. Press **AMPLITUDE, LOG dB/DIV,** 2, **dB, REF LVL**. Adjust the reference level to bring the peak of the displayed ramp (along the right most graticule) one division below the reference level.
7. Press **MKR**. Use the knob to place the marker at the left most graticule line. The marker should read 0 s. Press **MARKER DELTA**.
8. Press **AUX CTRL, TRACKING GENERATOR, MORE 1 OF 3, MORE 2 OF 3**, then **PWR SWP OFF**. The Δ MKR should read 0 dB ±0.1 dB. If not, press **MORE 3 OF 3** and adjust the power level until the marker reads 0 dB ±0.1 dB. Press **SGL SWP**.

ManualsPlus.com

9. Record the power level displayed on the measuring receiver.

Start power level: _____ dBm

10. Press **TRIG, SWEEP CONT, AUX CTRL, TRACKING GENERATOR**, **MORE 1 OF 3, MORE 2 OF 3,** and **PWR SWP ON**.

11. Press **MKR**, **MARKER NORMAL**. Use the knob to place the marker at the right most graticule line. The marker should read 50 msec. Press **MARKER DELTA**.

12. Press **AUX CTRL, TRACKING GENERATOR, MORE 1 OF 3, MORE 2 OF 3, PWR SWP OFF**, then **MORE 3 OF 3**. Adjust the power level until the Δ MKR reads 0 dB ±0.1 dB.

13. Record the power level displayed on the measuring receiver.

Stop power level _____ : dBm

14. Subtract the start power level (from step 9) from the stop power level (step 13) and record the result as the power sweep range.

Power sweep range: _____ dB

(Measurement uncertainty: ±0.049 dB)

ManualsPlus.com

64. RF-Power-Off Residuals

Instrument Under Test

8560E/EC (Option 002)

Related Specification

Tracking Generator Residuals

Related Adjustment

There is no related adjustment for this performance test.

Description

The tracking generator RF OUT 50 Ω is connected to the spectrum analyzer INPUT 50 Ω. Tracking is adjusted at 300 MHz for a maximum signal level. The tracking generator output is then connected to the input of an 8566A/B spectrum analyzer and the tracking generator is turned off. Several sweeps are taken on the 8566A/B over different frequency spans and the highest displayed residual is measured in each span. The amplitude of the highest residual is recorded.

Figure 10-77 RF-Power-Off Residuals Test Setup

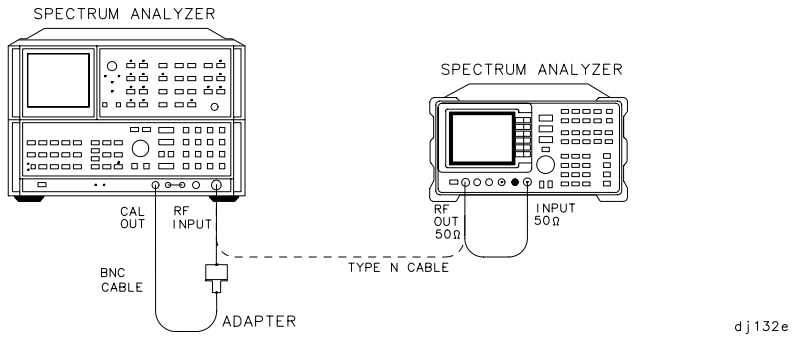

Equipment

Microwave spectrum analyzer. . . . . .Agilent 8566A/B

Adapter

Type N (m) to BNC (f) 1250-1476

Cables

ManualsPlus.com

Type N, 62 cm (24 in.) . . . . . Agilent 11500B/C

BNC, 23 cm (9 in.) . . . . . Agilent 10502A

Procedure

1. Connect the type N cable between the spectrum analyzer RF OUT 50 Ω and INPUT 50 Ω connectors. See Figure 10-77.
2. Press **PRESET** on the spectrum analyzer and set the controls as follows:

   Center frequency . . . . . 300 MHz

   Span . . . . . 0 Hz
3. On the spectrum analyzer, press **MKR, AUX CTRL,** and **TRACKING GENERATOR**. Press **SRC PWR ON,** 5, –**dBm**.
4. On the 8560E/EC spectrum analyzer, press **MORE 1 OF 3**, **TRACKING PEAK**. Wait for the PEAKING message to disappear.
5. On the 8560E/EC, press **MORE 2 OF 3**, **MORE 3 OF 3, SRC PWR OFF, FREQUENCY**, 300, **kHz**, **SGL SWP**.

NOTE It is only necessary to perform step 6 if more than 2 hours have elapsed since front-panel calibration of the Agilent 8566A/B spectrum analyzer has been performed.

6. After the Agilent 8566A/B has warmed up for at least 30 minutes, perform a front-panel calibration as follows:
   a. Connect a BNC cable between the CAL OUTPUT and RF INPUT.
   b. Press **2** – **22 GHz, INSTR PRESET**, **RECALL,** 8. Adjust AMPTD CAL for a marker amplitude reading of –10 dBm.
   c. Press **RECALL** 9. Adjust FREQ ZERO for a maximum amplitude response.
   d. Press **SHIFT, FREQUENCY SPAN** to start the 30 second internal error correction routine.
7. Connect the type-N cable from the tracking generator RF OUT 50 Ω to the Agilent 8566A/B RF INPUT. See Figure 10-77.
8. Set the Agilent 8566A/B REFERENCE LEVEL to –20 dBm.
9. Set the Agilent 8566A/B START FREQUENCY, STOP FREQUENCY, and RES BW as indicated in the first row of Table 10-104.
10. Press **SINGLE** and wait for the sweep to finish. Press **PEAK SEARCH**.
11. If the marker is on a suspected residual response, as opposed to a noise peak, press **SINGLE** again and wait for the sweep to finish. A

ManualsPlus.com

residual response persists on successive sweeps, but a noise peak does not.

NOTE If the Agilent 8566A/B marker frequency is greater than or equal to 2.5 GHz, press **PRESEL PEAK** and wait for the PEAKING message to disappear before recording the marker amplitude.

12. Record the marker amplitude and frequency reading in Table 10-104 as the residual amplitude and frequency.
13. Repeat steps 9 through 12 for the remaining Agilent 8566A/B START FREQUENCY, STOP FREQUENCY, and RES BW settings in Table 10-104.
14. Locate the residual response in Table 10-104 with the highest amplitude. Record the amplitude and frequency of this residual below:

Residual response amplitude: _____ dBm

Residual response frequency:_____ MHz

Table 10-104 RF-Power-Off Residual Responses

Agilent 8566A/B Settings			Residual Response		Measurement Uncertainty (dB)
Start Frequency	**Stop Frequency**	**RES BW**	**Amplitude (dBm)**	**Frequency (MHz)**	
300 kHz	1 MHz	3 kHz			+1.33/–1.56
1 MHz	100 MHz	10 kHz			+1.33/–1.56
100 MHz	500 MHz	10 kHz			+1.33/–1.56
500 MHz	1000 MHz	10 kHz			+1.33/–1.56
1000 MHz	1500 MHz	10 kHz			+1.33/–1.56
1500 MHz	2000 MHz	10 kHz			+1.33/–1.56
2000 MHz	2500 MHz	10 kHz			+1.33/–1.56
2500 MHz	2900 MHz	10 kHz			+2.02/–2.50

ManualsPlus.com

65. Harmonic Spurious Outputs

Instrument Under Test

8560E/EC (Option 002)

Related Specification

Harmonic Spurious Outputs

Related Adjustment

There is no related adjustment for this performance test.

Description

The tracking generator RF OUT 50 Ω is connected to the spectrum analyzer INPUT 50 Ω. Tracking is adjusted at 300 MHz for a maximum signal level. The tracking generator output is then connected to the input of an Agilent 8566A/B spectrum analyzer. The tracking generator is tuned to several frequencies and the amplitude of the second and third harmonics relative to the fundamental are measured at each frequency.

Figure 10-78 Harmonic Spurious Outputs Test Setup

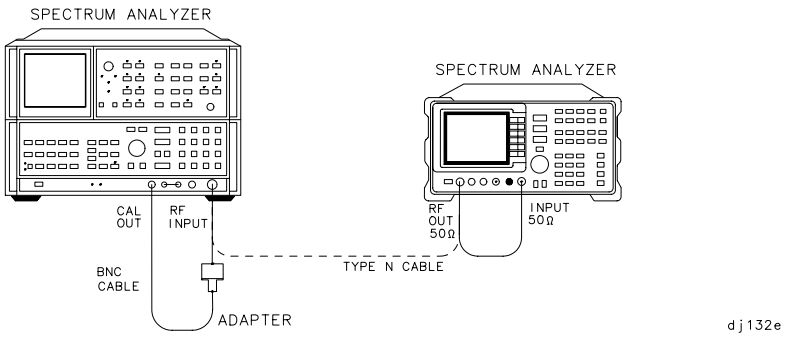

Equipment

Microwave spectrum analyzer . . . . . Agilent 8566A/B

Adapter

Type N (m) to BNC (f) 1250-1476

ManualsPlus.com

Cables

Type N, 62 cm (24 in.) . . . . . .Agilent 11500B/C

BNC, 23 cm (9 in.) . . . . . Agilent 10502A

Procedure

1. Connect the type N cable between the spectrum analyzer RF OUT 50 Ω and INPUT 50 Ω connectors. See Figure 10-78.
2. Press **PRESET** on the spectrum analyzer and set the controls as follows:

   Center frequency . . . . . 300 MHz

   Span . . . . . 0 Hz
3. On the spectrum analyzer, press **MKR**, **AUX CTRL**, and **TRACKING GENERATOR**. Press **SRC PWR ON**, 5, –**dBm**.
4. On the 8560E/EC spectrum analyzer, press **MORE 1 OF 3**, **TRACKING PEAK**. Wait for the PEAKING message to disappear.
5. On the 8560E/EC, press **MORE 2 OF 3, MORE 3 OF 3**, 1, **+dBm**, **FREQUENCY**, 300, **kHz**, **SGL SWP**.

NOTE It is only necessary to perform step 6 if more than 2 hours have elapsed since front-panel calibration of the Agilent 8566A/B spectrum analyzer has been performed.

6. After the Agilent 8566A/B has warmed up for at least 30 minutes, perform a front-panel calibration as follows:
   a. Connect a BNC cable between the CAL OUTPUT and RF INPUT.
   b. Press **2 – 22 GHz, INSTR PRESET**, **RECALL,** 8. Adjust AMPTD CAL for a marker amplitude reading of –10 dBm.
   c. Press **RECALL,** 9. Adjust FREQ ZERO for a maximum amplitude response.
   d. Press **SHIFT**, **FREQUENCY SPAN** to start the 30 second internal error correction routine.
7. Connect the type N cable from the tracking generator RF OUT 50 Ω to the Agilent 8566A/B RF INPUT. See Figure 10-78.
8. Set the Agilent 8566A/B controls as follows:

   Center frequency . . . . . 300 kHz

   Span . . . . . 100 kHz

ManualsPlus.com

Reference level . . . . . +5 dBm

Resolution BW . . . . . 3 kHz

9. On the Agilent 8566A/B, perform the following:

   a. Press **PEAK SEARCH**, **SIGNAL TRACK** (ON). Wait until the peaked signal peak is centered on the display.

   b. If the marker frequency is less than 2.5 GHz, press **PEAK SEARCH, MKR/→STEP SIZE,** and **MARKER \Δ**.

   c. If the marker frequency is greater than 2.5 GHz, press **PEAK SEARCH, PRESEL PEAK**, then wait for the PEAKING message to disappear. Press **MKR → CF STEP** and **MARKER DELTA**.

   d. Press **CENTER FREQUENCY,** ⇑ to tune to the second harmonic. If the center frequency is greater than 2 GHz, press ⇑, **SHIFT**, **CONT, CENTER FREQUENCY,** ⇓. Press **PEAK SEARCH**. If the center frequency is greater than 2.5 GHz, press **PRESEL PEAK**, wait for the PEAKING message to disappear. Record the marker amplitude reading in Table 10-105 as the 2nd harmonic level for the 300 kHz tracking generator output frequency.

      - *If the tracking generator output frequency is less than 1 GHz, skip step 9e and continue with step 9f.*

   e. Press **CENTER FREQUENCY,** ⇑ to tune to the third harmonic. If the center frequency is greater than 2 GHz, press ⇑, **SHIFT, CONT**, **CENTER FRQUENCY,** ⇓. Press **PEAK SEARCH**. If the center frequency is greater than 2.5 GHz, press **PRESEL PEAK**, wait for the PEAKING message to disappear. Record the marker amplitude reading in Table 10-105 as the 3rd Harmonic Level for the 300 kHz tracking generator output frequency.

   f. Press **MARKER**, **MARKERS OFF**.

10. Repeat step 8 and 9 for the remaining tracking generator output frequencies listed in Table 10-105. Note that the 8560E/EC center frequency is the same as the tracking generator output frequency.

11. Locate the most positive 2nd harmonic response level in Table 10-105 and record the value here:

    2nd harmonic response level: _____ dBc

12. Locate the most positive 3rd harmonic response level in Table 10-105 and record the value here:

    3rd harmonic response level: _____ dBc

ManualsPlus.com

Table 10-105 Harmonic Spurious Responses

Tracking Generator Frequency	2nd Harmonic Response Level (dBc)	3rd Harmonic Response Level (dBc)	Measurement Uncertainty (dB)
300 kHz			+1.55/–1.80
100 MHz			+1.55/–1.80
300 MHz			+1.55/–1.80
1 GHz		N/A	+1.55/–1.80
1.4 GHz		N/A	+3.45/–4.01

ManualsPlus.com

66. Non-Harmonic Spurious Outputs

Instrument Under Test

8560E/EC (Option 002)

Related Specification

Non-Harmonic Spurious Outputs

Related Adjustment

There is no related adjustment for this performance test.

Description

The tracking generator RF OUT 50 Ω is connected to the spectrum analyzer INPUT 50 Ω. Tracking is adjusted at 300 MHz for a maximum signal level. The tracking generator output is then connected to the input of an Agilent 8566A/B spectrum analyzer. The tracking generator is tuned to several output frequencies.

At each output frequency, several sweeps are taken on the Agilent 8566A/B over different frequency spans. The highest displayed spurious response is measured in each span. Responses at the fundamental of the tracking generator output frequency or their harmonics are ignored. The amplitude of the highest spurious response is recorded.

Figure 10-79 Non-Harmonic Spurious Responses Test Setup

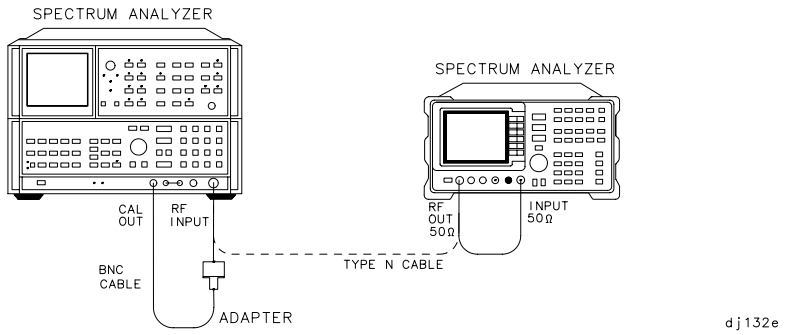

Equipment

Microwave spectrum analyzer . . . . . Agilent 8566A/B

ManualsPlus.com

Adapter

Type N (m) to BNC (f) 1250-1476

Cables

Type N, 62 cm (24 in.) . . . . . Agilent 11500B/C

BNC, 23 cm (9 in.) . . . . . Agilent 10502A

Procedure

1. Connect the type-N cable between the spectrum analyzer RF OUT 50 Ω and INPUT 50 Ω connectors. See Figure 10-79.
2. Press **PRESET** on the spectrum analyzer and set the controls as follows:

   Center frequency . . . . . 300 MHz

   Span . . . . . 0 Hz
3. On the spectrum analyzer, press **MKR**, **AUX CTRL,** and **TRACKING GENERATOR**. Press **SRC PWR ON,** 5, –**dBm**.
4. On the 8560E/EC spectrum analyzer, press **MORE 1 OF 3**, **TRACKING PEAK**. Wait for the PEAKING message to disappear.
5. On the 8560E/EC, press **MORE 2 OF 3**, **MORE 3 OF 3**, 1, **+dBm**, **FREQUENCY**, 300, **kHz**, **SGL SWP**.

NOTE It is only necessary to perform step 6 if more than 2 hours have elapsed since front-panel calibration of the Agilent 8566A/B spectrum analyzer has been performed.

6. After the Agilent 8566A/B has warmed up for at least 30 minutes, perform a front-panel calibration as follows:
   a. Connect a BNC cable between the CAL OUTPUT and RF INPUT.
   b. Press **2 – 22 GHz**, **INSTR PRESET**, **RECALL,** 8. Adjust AMPTD CAL for a marker amplitude reading of –10 dBm.
   c. Press **RECALL,** 9. Adjust FREQ ZERO for a maximum amplitude response.
   d. Press **SHIFT**, **FREQUENCY SPAN** to start the 30 second internal error correction routine.
   e. After the correction routine is completed, press **SHIFT**, **START FREQ** to use the error correction factors just calculated.
7. Connect the type-N cable from the tracking generator RF OUT 50 Ω to the Agilent 8566A/B RF INPUT. See Figure 10-79.

ManualsPlus.com

Measure Fundamental Amplitudes

8. Set the 8560E/EC center frequency to the fundamental frequency listed in Table 10-106.
9. Set the Agilent 8566A/B controls as follows:

   Reference level . . . . . +5 dBm

   Attenuator . . . . . .20 dB

   Span . . . . . 100 kHz
10. Set the Agilent 8566A/B center frequency to the fundamental frequency listed in Table 10-106.
11. Press **PEAK SEARCH** on the Agilent 8566A/B. If the marker frequency is greater than 2.5 GHz, press **PRESEL PEAK**, wait for the PEAKING message to disappear. Press **MKR** → **REF LVL**. Wait for the sweep to complete.
12. Record the marker amplitude reading in Table 10-106 as the fundamental amplitude.
13. Repeat step 8 through 12 for the remaining fundamental frequencies listed in Table 10-106.

Measuring Non-Harmonic Responses

14. On the 8560E/EC, set the center frequency to 300 kHz.
15. Set the Agilent 8566A/B START FREQ, STOP FREQ, and RES BW to the settings indicated in the first rows of Table 10-106.
16. Press **SINGLE** on the Agilent 8566A/B and wait for the sweep to finish. Press **PEAK SEARCH**. If the marker frequency is greater than 2.5 GHz, on the Agilent 8566A/B press **PRESEL PEAK** and wait for the PEAKING message to disappear.
17. Use the following steps to verify that the marked signal is not the fundamental or a harmonic of the fundamental:

    a. Divide the marker frequency by the fundamental frequency (the 8560E/EC center frequency).

       As an example: If the marker frequency = 880 kHz
       If the fundamental frequency = 300 kHz
       Result: 880 kHz/300 kHz = 2.933

    b. Round the result to the nearest whole number.

       Following the above example: round 2.933 to 3

ManualsPlus.com

c. Multiply the fundamental frequency by the rounded number.

   3 × 300 kHz = 900 kHz

d. Calculate the difference between the marker frequency and the result in step c.

   Step c result = 900 kHz Marker frequency = 880 kHz The difference = 20 kHz

e. Due to Agilent 8566A/B span accuracy uncertainties, the marker frequency may not equal the actual frequency. Given the marker frequency, verify whether the difference calculated in step d is within appropriate tolerance:

   Marker frequencies < 5 MHz, tolerance = ±200 kHz
   Marker frequencies < 55 MHz, tolerance = ±750 kHz
   Marker frequencies > 55 MHz, tolerance = ±10 MHz

f. Ignore this response *if* the difference in step d is within the indicated tolerance; the signal in question is the fundamental signal (if the number in step b = 1) or a harmonic of the fundamental (if the number in step b > 1).

18. Verify that the marked signal is a true response and not a random noise peak. Do so by pressing **SINGLE** to trigger a new sweep, then press **PEAK SEARCH**. A true response remains at the same frequency and amplitude for successive sweeps, noise peaks do not.

19. If the marked signal is either the fundamental, a harmonic of the fundamental (refer to step 17), or a noise peak (refer to step 18), move the marker to the next highest signal by pressing **SHIFT** then **PEAK SEARCH**. Continue with step 17. Record this difference as the non-harmonic response amplitude for the appropriate 8560E/EC center frequency and Agilent 8566A/B start and stop frequency settings in Table 10-106.

20. If the marked signal is not the fundamental or a harmonic of the fundamental (refer to step 17) and is a true response (refer to step 18), calculate the difference between the marked signal amplitude and the fundamental amplitude listed in Table 10-106.

    If the fundamental frequency = 300 kHz
    And the signal fundamental amplitude = +1.2 dBm
    If the marker amplitude = –30 dBm
    The result = –32 dBc

21. Record this difference as the non-harmonic response amplitude for the appropriate 8560E/EC center frequency and Agilent 8566A/B start and stop frequency settings in Table 10-107.

    Non-harmonic amplitude = marker amplitude – fundamental amplitude

ManualsPlus.com

22. If a true non-harmonic spurious response is not found, record NOISE as the non-harmonic response amplitude for the appropriate 8560E/EC center frequency and Agilent 8566A/B start and stop frequency settings in Table 10-107.

23. Repeat steps 16 through 21 for the remaining Agilent 8566A/B START FREQ, STOP FREQ and RES BW settings and 8560E/EC center frequency.

24. Repeat steps 15 through 22 with the 8560E/EC center frequency set to 1.5 GHz.

25. Repeat steps 15 through 22 with the 8560E/EC center frequency set to 2.9 GHz.

26. Locate the most positive non-harmonic response amplitude in Table 10-107 for Agilent 8566A/B stop frequency settings ≤2000 MHz and record the value here:

Non-harmonic
response amplitude (≤2000 MHz):_____ dBc

27. Locate the most positive non-harmonic response amplitude for Agilent 8566A/B start frequency settings ≥2000 MHz in Table 10-107 and record the value here:

Non-harmonic
response amplitude (≥2000 MHz):_____ dBc

ManualsPlus.com

Table 10-106 Fundamental Response Amplitudes

Fundamental Frequency	Fundamental Amplitude (dBm)
300 kHz	
1.5 GHz	
2.9 GHz	

Table 10-107 Non-Harmonic Spurious Responses

Agilent 8566A/B Settings			Non-Harmonic Response Amplitude (dBc)			Measurement Uncertainty (dB)
Start Frequency (MHz)	Stop Frequency (MHz)	RES BW	@ 300 kHz Center Freq	@ 1.5 GHz Center Freq	@ 2.9 GHz Center Freq	
0.3	5.0	30 kHz				+1.55/–1.80
5.0	55	100 kHz				+1.55/–1.80
55	1240	1 MHz				+1.55/–1.80
1240	2000	1 MHz				+1.55/–1.80
2000	2900	1 MHz				+3.48/–4.01

ManualsPlus.com

67. LO Feedthrough Amplitude

Instrument Under Test

8560E/EC (Option 002)

Related Specification

Tracking Generator LO Feedthrough

Related Adjustment

There is no related adjustment for this performance test.

Description

The tracking generator RF OUT 50 Ω is connected to the spectrum analyzer INPUT 50 Ω. Tracking is adjusted at 300 MHz for a maximum signal level. The tracking generator output is then connected to the input of an Agilent 8566A/B spectrum analyzer. The tracking generator is tuned to several output frequencies and the LO feedthrough is measured at the frequency extremes of the LO.

Figure 10-80 LO Feedthrough Amplitude Test Setup

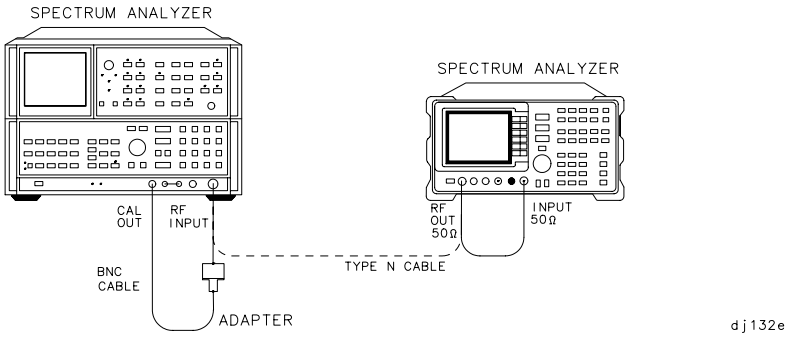

Equipment

Microwave spectrum analyzer . . . . . Agilent 8566A/B

Adapter

Type N (m) to BNC (f) 1250-1476

ManualsPlus.com

Cables

Type N, 62 cm (24 in.) . . . . . .Agilent 11500B/C

BNC, 23 cm (9 in.) . . . . . Agilent 10502A

Procedure

1. Connect the type N cable between the spectrum analyzer RF OUT 50 Ω and INPUT 50 Ω connectors. See Figure 10-80.
2. Press **PRESET** on the spectrum analyzer and set the controls as follows:

   Center frequency . . . . . 300 MHz

   Span . . . . . 0 Hz
3. On the spectrum analyzer, press **MKR**, **AUX CTRL**, and **TRACKING GENERATOR**. Press **SRC PWR ON,** 5, –**dBm**.
4. On the 8560E/EC spectrum analyzer, press **MORE 1 OF 3**, **TRACKING PEAK**. Wait for the PEAKING message to disappear.
5. On the 8560E/EC, press **MORE 2 OF 3**, **MORE 3 OF 3,** 1, **+dBm**, **FREQUENCY**, 300, **kHz**, **SGL SWP**.

NOTE It is only necessary to perform step 6 if more than 2 hours have elapsed since front-panel calibration of the Agilent 8566A/B spectrum analyzer has been performed.

6. After the Agilent 8566A/B has warmed up for at least 30 minutes, perform a front-panel calibration as follows:
   a. Connect a BNC cable between the CAL OUTPUT and RF INPUT.
   b. Press **2** – **22 GHz, INSTR PRESET**, **RECALL,** 8. Adjust AMPTD CAL for a marker amplitude reading of –10 dBm.
   c. Press **RECALL,** 9. Adjust FREQ ZERO for a maximum amplitude response.
   d. Press **SHIFT**, **FREQUENCY SPAN** to start the 30 second internal error correction routine.
   e. After the correction routine is completed, press **SHIFT**, **START FREQ** to use the error correction factors just calculated.
7. Connect the type-N cable from the tracking generator RF OUT 50 Ω to the Agilent 8566A/B RF INPUT. See Figure 10-80.

ManualsPlus.com

8. Set the Agilent 8566A/B controls as follows:

   Center frequency . . . . . .3.911 GHz

   Span . . . . . 100 kHz

   Reference level . . . . . 0 dBm

   Resolution BW . . . . . 1 kHz

9. On the Agilent 8566A/B, press **PEAK SEARCH**, **SIGNAL TRACK** (ON). Wait for the signal to be displayed at center screen.

10. On the Agilent 8566A/B, press **PEAK SEARCH, PRESEL PEAK**. Wait for the `PEAKING` message to disappear.

11. Record the Agilent 8566A/B marker amplitude reading below:

    LO feedthrough (at 3.911 GHz): _____ dBm

    (Measurement uncertainty: +2.02/–2.50 dB)

12. Set the 8560E/EC center frequency to 2.9 GHz.

13. Set the Agilent 8566A/B center frequency to 6.8107 GHz.

14. On the Agilent 8566A/B, press **PEAK SEARCH**, **SIGNAL TRACK** (ON). Wait for the signal to be displayed at center screen.

15. On the Agilent 8566A/B, press **PEAK SEARCH, PRESEL PEAK**. Wait for the `PEAKING` message to disappear.

16. Record the Agilent 8566A/B marker amplitude reading below:

    LO feedthrough (at 6.8107 GHz): _____ dBm

    (Measurement uncertainty: +2.10/–2.67 dB)

ManualsPlus.com

68. Tracking Generator Feedthrough

Instrument Under Test

8560E/EC (Option 002)

Related Specification

Tracking Generator Feedthrough

Related Adjustment

There is no related adjustment for this performance test.

Description

The tracking generator RF OUT 50 Ω is connected to the spectrum analyzer INPUT 50 Ω. Tracking is adjusted at 300 MHz for a maximum signal level. The tracking generator output is then terminated in 50 Ω and set for +1 dBm output power (maximum leveled output power). The INPUT 50 Ω of the spectrum analyzer s terminated as well. The analyzer displayed average noise level is measured at several frequency ranges.

Figure 10-81 Tracking Generator Feedthrough Test Setup

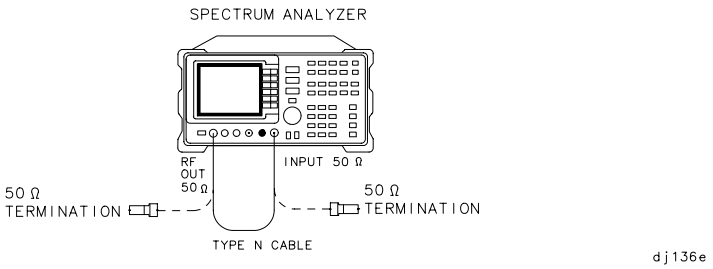

Equipment

50 Ω termination *(2 required)* . . . . . Agilent 908A

Adapter

Type N (m) to BNC (f) 1250-1476

ManualsPlus.com

Cables

Type N, 62 cm (24 in.) . . . . . Agilent 11500B/C

BNC, 23 cm (9 in.) . . . . . Agilent 10502A

Procedure

1. Connect the type N cable between the spectrum analyzer RF OUT 50 Ω and INPUT 50 Ω connectors. See Figure 10-81.
2. Press **PRESET** on the spectrum analyzer and set the controls as follows:

   Center frequency . . . . . 300 MHz

   Span . . . . . 0 Hz
3. On the spectrum analyzer, press **MKR, AUX CTRL,** and **TRACKING GENERATOR**. Press **SRC PWR ON,** 5, –**dBm**.
4. On the 8560E/EC spectrum analyzer, press **MORE 1 OF 3**, **TRACKING PEAK**. Wait for the PEAKING message to disappear.
5. Connect the analyzer CAL OUTPUT to the INPUT 50 Ω, then set the controls as follows:

   Reference level . . . . . –10 dBm

   Attenuator . . . . . 0 dB

   Resolution BW . . . . . 300 Hz

   Video BW . . . . . 1 Hz
6. Press **MKR, CAL, REF LVL ADJ**.
7. Use the knob or step keys to set the REF LEVEL ADJ # value to a marker amplitude reading of –10.00 dBm ±0.17 dB.
8. Connect one Agilent 908A 50 Ω termination to the 8560E/EC INPUT 50 Ω connector and another to the tracking generator RF OUT 50 Ω.
9. Press **AUX CTRL, TRACKING GENERATOR,** 1, **+dBm**.
10. Set the spectrum analyzer controls as follows:

    Center frequency . . . . . 300 kHz

    Frequency offset. . . . . –10 kHz

    Span . . . . . 0 Hz

    Reference level . . . . . –50 dBm

ManualsPlus.com

Markers . . . . . off

Resolution BW . . . . . 300 Hz

Video BW . . . . . 1 Hz

NOTE A –10 kHz offset is added to avoid known residual responses.

11. Press **SGL SWP** and wait for the sweep to finish. Press **MKR**, then record the MKR amplitude reading in Table 10-108 for the tracking generator 300 kHz output frequency.

12. Repeat step 11 for the remaining tracking generator output frequencies listed in Table 10-108.

13. In Table 10-108, locate the most positive noise level amplitude for the 300 kHz to 1 MHz frequency range. Record this amplitude here:

    TG feedthrough, 300 kHz to 1 MHz: _____ dBm

14. In Table 10-108, locate the most positive noise level amplitude for the 1 MHz to 2.0 GHz frequency range. Record this amplitude here:

    TG feedthrough, 1 MHz to 2.0 GHz:_____ dBm

15. In Table 10-108, locate the most positive noise level amplitude for the 2.0 GHz to 2.9 GHz frequency range. Record this amplitude here:

    TG feedthrough, 2.0 GHz to 2.9 GHz: _____ dBm

Table 10-108 Tracking Generator Feedthrough Amplitude

Frequency Range	Tracking Generator Output Frequency	Noise Level Amplitude (dBm)	Measurement Uncertainty (dB)
300 kHz to 1 MHz	300 kHz		+1.24/–1.37
	400 kHz		+1.24/–1.37
	500 kHz		+1.24/–1.37
	600 kHz		+1.24/–1.37
	700 kHz		+1.24/–1.37
	800 kHz		+1.24/–1.37
	900 kHz		+1.24/–1.37
	1 MHz		+1.24/–1.37

ManualsPlus.com

Table 10-108 Tracking Generator Feedthrough Amplitude (Continued)

Frequency Range	Tracking Generator Output Frequency	Noise Level Amplitude (dBm)	Measurement Uncertainty (dB)
1 MHz to 2.0 GHz	1.01 MHz		+1.24/–1.37
	2 MHz		+1.24/–1.37
	5 MHz		+1.24/–1.37
	10 MHz		+1.24/–1.37
	20 MHz		+1.24/–1.37
	50 MHz		+1.24/–1.37
	100 MHz		+1.24/–1.37
	300 MHz		+1.24/–1.37
	500 MHz		+1.24/–1.37
	700 MHz		+1.24/–1.37
	900 MHz		+1.24/–1.37
	1100 MHz		+1.24/–1.37
	1300 MHz		+1.24/–1.37
	1500 MHz		+1.24/–1.37
	1700 MHz		+1.24/–1.37
	1900 MHz		+1.24/–1.37
	2000 MHz		+1.24/–1.37
2.0 GHz to 2.9 GHz	2001 MHz		+1.24/–1.37
	2100 MHz		+1.24/–1.37
	2300 MHz		+1.24/–1.37
	2500 MHz		+1.24/–1.37
	2700 MHz		+1.24/–1.37
	2800 MHz		+1.24/–1.37
	2900 MHz		+1.24/–1.37

ManualsPlus.com

69. Frequency Tracking Range

Instrument Under Test

8560E/EC (Option 002)

Related Characteristic

None

Related Adjustment

Tracking Oscillator Range Adjustment

Description

The tracking generator RF OUT 50 Ω is connected to the spectrum analyzer INPUT 50 Ω through a power splitter. Tracking is adjusted at 300 MHz for a maximum signal level.

The coarse and fine tracking adjustments are set to their maximum values and the frequency is recorded, then compared with the first frequency measurement. The tracking adjustments are set to their minimum values and the frequency recorded then compared with the first frequency measurement.

If the frequency tracking range is not greater than ±5 kHz, it is necessary to perform the Tracking Oscillator Range Adjustment. Refer to *Agilent Technologies 8560E/EC Spectrum Analyzer Service Guide*.

Figure 10-82 Frequency Tracking Range Test Setup

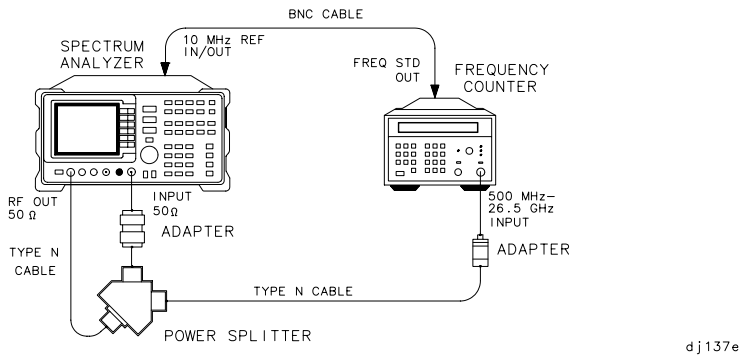

Equipment

Frequency counter . . . . . Agilent 5343A

Power splitter . . . . . Agilent 11667A

ManualsPlus.com

Adapter

Type N (m) to type N (m) 1250-1745

Cables

Type N, 62 cm (24 in.) *(2 required)*. . . . . Agilent 11500B/C

BNC, 122 cm (48 in.) . . . . . Agilent 10503A

Procedure

1. Connect the equipment as shown in Figure 10-82. The frequency counter provides the frequency reference for the spectrum analyzer.
2. Press **PRESET** on the spectrum analyzer and set the controls as follows:

   Center frequency . . . . . .500 MHz

   Span . . . . . 0 Hz
3. On the spectrum analyzer, press **MKR, AUX CTRL, REAR PANEL, 10 MHz EXT** to place the spectrum analyzer in external frequency reference mode. Press **PREV MENU, TRACKING GENERATOR, SRC PWR ON,** 0, **dBm, MORE 1 OF 3**.
4. On the spectrum analyzer, press **TRACKING PEAK** and wait for the `PEAKING` message to disappear.
5. Set the frequency counter controls as follows:

   Sample rate. . . . . Midrange

   10 Hz – 500 MHz or

   500 MHz – 26.5 GHz Switch . . . . . 500 MHz – 26.5 GHz

   Resolution . . . . . 1 Hz
6. Wait for the counter to gate two or three times, then record the counter reading below as the peaked frequency:

   Peaked frequency: _____ MHz
7. On the spectrum analyzer, press **MAN TRK ADJ,** 255, **Hz**. Rotate the knob clockwise until the `FINE TRACK ADJ` value reads #255.
8. Wait for the counter to gate two or three times, then record the counter reading below as the minimum frequency.

   Minimum frequency: _____ MHz

ManualsPlus.com

9. On the spectrum analyzer, press **MAN TRK ADJ,** 0, **Hz**. Rotate the knob counterclockwise until the `FINE TRACK ADJ` value reads #0.

10. Wait for the counter to gate two or three times, then record the counter reading below as the maximum frequency.

Maximum frequency: _____ MHz

11. Subtract the minimum frequency from the peaked frequency and record the result as the negative frequency variation. The variation should be greater than 5 kHz. Perform the Tracking Oscillator Range Adjustment if the variation is less than 5 kHz.

Negative frequency variation: _____ kHz

12. Subtract the maximum frequency from the peaked frequency and record the result as the positive frequency variation. The variation should be greater than 5 kHz. Perform the Tracking Oscillator Range Adjustment if the variation is less than 5 kHz.

Positive frequency variation: _____ kHz

ManualsPlus.com

70. Tracking Generator Frequency Accuracy

Instrument Under Test

8560E/EC (Option 002)

Related Specification

Tracking Generator Frequency Readout Accuracy

Related Adjustment

10 MHz Frequency Reference Adjustment
YTO Adjustments

Description

The tracking generator RF OUT 50 Ω is connected to the spectrum analyzer INPUT 50 Ω through a power splitter. Tracking is adjusted at 300 MHz for a maximum signal level. The other power splitter output is connected to a frequency counter. The displayed counter frequency is recorded. This process is repeated at several output frequencies.

The effect of the (frequency × frequency reference error) term is eliminated by locking the spectrum analyzer to the frequency counter 10 MHz reference. The 5% of SPAN setting term is also eliminated by setting the SPAN to zero. These terms may be eliminated for the purpose of this test since these are measured in the 10 MHz Reference Accuracy and Frequency Span Accuracy tests.

The remaining term is a function of the tracking adjustment and cannot be eliminated. It is the effect of this term which is verified in this test.

Figure 10-83 Tracking Generator Frequency Accuracy Test Setup

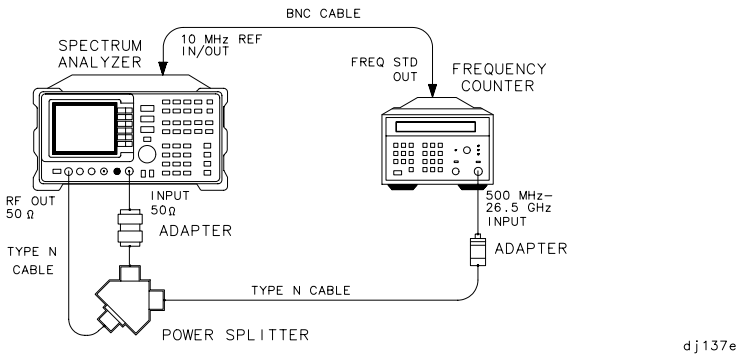

ManualsPlus.com

Equipment

Frequency counter . . . . . Agilent 5343A

Power splitter . . . . . Agilent 11667A

Adapters

Type N (m) to type N (m) 1250-1475

Type N (f) to APC 3.5 (f) 1250-1745

Cables

Type N, 62 cm (24 in.) *(2 required)* . . . . . Agilent 11500B/C

BNC, 122 cm (48 in.) . . . . . Agilent 10503A

Procedure

1. Connect the equipment as shown in Figure 10-83.
2. Press **PRESET** on the spectrum analyzer and set the controls as follows:

   Center frequency . . . . . 500 MHz

   Span . . . . . 0 Hz
3. On the spectrum analyzer, press **MKR**, **AUX CTRL, REAR PANEL**, **10 MHz EXT** to place the spectrum analyzer in external frequency reference mode. Press **PREV MENU, TRACKING GENERATOR**, **SRC PWR ON,** 0, **dBm**.
4. On the spectrum analyzer, press **AUX CTR**, **TRACKING GENERATOR**, **MORE 1 OF 3, TRACKING PEAK** and wait for the PEAKING message to disappear.
5. Set the frequency counter controls as follows:

   Sample rate . . . . . Midrange

   10 Hz – 500 MHz or

   500 MHz – 26.5 GHz Switch . . . . . 500 MHz – 26.5 GHz

   Resolution . . . . . 1 Hz
6. Wait for the counter to gate two or three times, then record the counter reading in Table 10-109 for the 500 MHz center frequency setting.
7. Repeat steps 4 through 6 for the remaining center frequency settings in Table 10-108.

ManualsPlus.com

8. Subtract the center frequency value from the measured frequency for each center frequency setting in Table 10-108 and record the result as the frequency error.

9. Locate in Table 10-108 the greatest frequency error, treating negative frequency errors as if they were positive. For example, if the frequency errors are –240, +110, –80, and +142 Hz, the greatest frequency error would be –240 Hz. Record the greatest frequency error below:

Frequency error: _____ Hz

Table 10-109 Frequency Accuracy

CENTER FREQ Setting (MHz)	Measured Frequency (MHz)	Frequency Error (Hz)	Measurement Uncertainty (Hz)
500			±1.0
1000			±1.0
1500			±1.0
2000			±1.0
2500			±1.0
2900			±1.0

ManualsPlus.com

ManualsPlus.com

11 8560E/EC Performance Test Record

ManualsPlus.com

Test Record

Table 11-1 8560E/EC Performance Test Record

Agilent Technologies
Address: _____
_____

Report No. _____

Date _____

Select model: 8560E ___ 8560EC ___
Serial No. _____
Firmware Revision _____

Options _____

Customer _____
Ambient temperature _____ °C
Power mains line frequency _____ Hz (nominal)

Tested by _____
Relative humidity_____ %

Test Equipment Used

Description	Model No.	Trace No.	Cal Due Date
Microwave Spectrum Analyzer (8560E/EC Opt. 002 only)	_____	_____	_____
Synthesized Sweeper #1	_____	_____	_____
Synthesized Sweeper #2	_____	_____	_____
Synthesized Signal Generator	_____	_____	_____
Synthesizer/Level Generator	_____	_____	_____
Measuring Receiver	_____	_____	_____
RF Power Sensor	_____	_____	_____
Low-Power Power Sensor	_____	_____	_____
Pulse/Function Generator	_____	_____	_____
Microwave Frequency Counter	_____	_____	_____
Oscilloscope	_____	_____	_____
Frequency Counter	_____	_____	_____
Universal Frequency Counter	_____	_____	_____
Amplifier	_____	_____	_____
Frequency Standard	_____	_____	_____
Power Splitter	_____	_____	_____
50 MHz Low-Pass Filter	_____	_____	_____
50 Ω Termination	_____	_____	_____
20 dB Fixed Attenuator	_____	_____	_____
10 dB Fixed Attenuator	_____	_____	_____
10 dB Step Attenuator	_____	_____	_____
1 dB Step Attenuator	_____	_____	_____
Digital Voltmeter	_____	_____	_____
Function Generator	_____	_____	_____

Notes/Comments: _____
_____
_____

ManualsPlus.com

Table 11-2 Performance Test Record (2 of 22)

Agilent Technologies

Select model: 8560E ___ 8560EC ___ Report No. _____

Serial No. _____ Date _____

Test Description	Results			Measurement Uncertainty
	Minimum	Measured	Maximum	
1. 10 MHz Reference Output Accuracy (Non-Option 103)				
5-minute Warm-up Error (0 °C to +55 °C)	-1×10^{-7}	_____	$+1 \times 10^{-7}$	$\pm 2.004 \times 10^{-9}$
5-minute Warm-up Error (–10 °C to 0 °C)	-1×10^{-6}	_____	$+1 \times 10^{-6}$	$\pm 2.004 \times 10^{-9}$
15-minute Warm-up Error	-1×10^{-8}	_____	$+1 \times 10^{-8}$	$\pm 2.003 \times 10^{-9}$
2. 10 MHz Reference Output Accuracy (Option 103) Calibrator Frequency	299.9988 MHz	_____	300.0012 MHz	±55.75 Hz
3. Fast Sweep Time Accuracy (EC-Series or E-Series, Option 007)	299.700 MHz	_____	300.300 MHz	±55.75 Hz
4. Calibrator Amplitude Accuracy Calibrator Amplitude	–10.30 dBm	_____	+9.70 dB	±0.12 dB
5. Displayed Average Noise Level Non-Option 103:				
30 Hz		_____	–90 dBm	+1.24/–1.37 dB
100 Hz		_____	–90 dBm	+1.24/–1.37 dB
1 kHz		_____	–105 dBm	+1.24/–1.37 dB
10 kHz		_____	–120 dBm	+1.24/–1.37 dB
100 kHz		_____	–120 dBm	+1.24/–1.37 dB
1 MHz to 10 MHz		_____	–140 dBm	+1.24/–1.37 dB
10 MHz to 2.9 GHz				
Serial Prefix <3632A		_____	–145 dBm	+1.24/–1.37 dB
Serial Prefix ≥3632A		_____	–151 dBm	+1.24/–1.37 dB
Option H13		_____	–151 dBm	+1.24/–1.37 dB

Table 11-3 Performance Test Record (3 of 22)

Agilent Technologies

Select model: 8560E ___ 8560EC ___ Report No. _____

ManualsPlus.com

Table 11-3 Performance Test Record (3 of 22)

Serial No. _____ Date _____

Test Description	Results			Measurement Uncertainty
	Minimum	Measured	Maximum	
5. DANL (continued)				
Option 103:				
30 Hz		_____	–80 dBm	+1.24/–1.37 dB
100 Hz		_____	–80 dBm	+1.24/–1.37 dB
1 kHz		_____	–95 dBm	+1.24/–1.37 dB
10 kHz		_____	–110 dBm	+1.24/–1.37 dB
100 kHz		_____	–110 dBm	+1.24/–1.37 dB
1 MHz to 10 MHz		_____	–130 dBm	+1.24/–1.37 dB
10 MHz to 2.9 GHz		_____		
Serial Prefix <3632A		_____	–135 dBm	+1.24/–1.37 dB
Serial prefix ≥3632A		_____	–141 dBm	+1.24/–1.37 dB
Option H13		_____	–141 dBm	+1.24/–1.37 dB
11. Resolution Bandwidth Switching and IF Alignment Uncertainty				
2 MHz RES BW	–0.5 dB	_____	+0.5 dB	±0.10 dB
1 MHz RES BW	–0.5 dB	_____	+0.5 dB	±0.10 dB
100 kHz RES BW	–0.5 dB	_____	+0.5 dB	±0.10 dB
30 kHz RES BW	–0.5 dB	_____	+0.5 dB	±0.10 dB
10 kHz RES BW	–0.5 dB	_____	+0.5 dB	±0.10 dB
3 kHz RES BW	–0.5 dB	_____	+0.5 dB	±0.10 dB
1 kHz RES BW	–0.5 dB	_____	+0.5 dB	±0.10 dB
300 Hz RES BW	–1.0 dB	_____	+1.0 dB	±0.10 dB
100 Hz RES BW	–0.5 dB	_____	+0.5 dB	±0.10 dB
30 Hz RES BW	–0.5 dB	_____	+0.5 dB	±0.10 dB
10 Hz RES BW	–0.5 dB	_____	+0.5 dB	±0.10 dB
3 Hz RES BW*	–0.5 dB	_____	+0.5 dB	±0.10 dB
1 Hz RES BW*	–0.5 dB	_____	+0.5 dB	±0.10 dB

* 3 Hz and 1 Hz RES BW not available with Option 103.

ManualsPlus.com

Table 11-4 Performance Test Record (4 of 22)

Agilent Technologies

Select model: 8560E ___ 8560EC ___ Report No. _____

Serial No. _____ Date _____

Test Description	Results			Measurement Uncertainty
	Minimum	Measured	Maximum	
12. Resolution Bandwidth Accuracy and Selectivity				
3 dB Bandwidth Accuracy				
2 MHz RES BW	–25%	_____	+50%	±1.33%
1 MHz RES BW	–25%	_____	+25%	±1.33%
300 kHz RES BW	–10%	_____	+10%	±1.33%
100 kHz RES BW	–10%	_____	+10%	±1.33%
30 kHz RES BW	–10%	_____	+10%	±1.33%
10 kHz RES BW	–10%	_____	+10%	±1.33%
3 kHz RES BW	–10%	_____	+10%	±1.33%
1 kHz RES BW	–10%	_____	+10%	±1.33%
300 Hz RES BW	–10%	_____	+10%	±1.33%
Selectivity				
2 MHz RES BW		_____	15:1	±2.80%
1 MHz RES BW		_____	15:1	±2.80%
300 kHz RES BW		_____	15:1	±2.80%
100 kHz RES BW		_____	15:1	±2.80%
30 kHz RES BW		_____	15:1	±2.80%
10 kHz RES BW		_____	15:1	±2.80%
3 kHz RES BW		_____	15:1	±2.80%
1 kHz RES BW		_____	15:1	±2.80%
300 Hz RES BW		_____	15:1	±2.80%
13. Input Attenuator Switching Uncertainty				
Cumulative, 50 MHz				
20 dB ATTEN	–0.6 dB	_____	+0.6 dB	±0.12 dB
30 dB ATTEN	–1.2 dB	_____	+1.2 dB	±0.12 dB
40 dB ATTEN	–1.8 dB	_____	+1.8 dB	±0.12 dB
50 dB ATTEN	–1.8 dB	_____	+1.8 dB	±0.14 dB

ManualsPlus.com

Table 11-5 Performance Test Record (5 of 22)

Agilent Technologies

Select model: 8560E ___ 8560EC ___ Report No. _____

Serial No. _____ Date _____

Test Description	Results			Measurement Uncertainty
	Minimum	Measured	Maximum	
13. Input Attenuator Switching Uncertainty (continued)				
Cumulative, 50 MHz (cont'd)				
60 dB ATTEN	–1.8 dB	_____	+1.8 dB	±0.14 dB
70 dB ATTEN	–1.8 dB	_____	+1.8 dB	±0.14 dB
Incremental, 50 MHz				
20 dB ATTEN	–0.6 dB	_____	+0.6 dB	±0.12 dB
30 dB ATTEN	–0.6 dB	_____	+0.6 dB	±0.12 dB
40 dB ATTEN	–0.6 dB	_____	+0.6 dB	±0.12 dB
50 dB ATTEN	–0.6 dB	_____	+0.6 dB	±0.14 dB
60 dB ATTEN	–0.6 dB	_____	+0.6 dB	±0.14 dB
70 dB ATTEN	–0.6 dB	_____	+0.6 dB	±0.14 dB
Cumulative, 2.9 GHz				
20 dB ATTEN	–0.6 dB	_____	+0.6 dB	±0.23 dB
30 dB ATTEN	–1.2 dB	_____	+1.2 dB	±0.23 dB
40 dB ATTEN	–1.8 dB	_____	+1.8 dB	±0.23 dB
50 dB ATTEN	–1.8 dB	_____	+1.8 dB	±0.23 dB
60 dB ATTEN	–1.8 dB	_____	+1.8 dB	+0.24/–0.25 dB
70 dB ATTEN	–1.8 dB	_____	+1.8 dB	+0.24/–0.25 dB
Incremental, 2.9 GHz				
20 dB ATTEN	–0.6 dB	_____	+0.6 dB	±0.23 dB
30 dB ATTEN	–0.6 dB	_____	+0.6 dB	±0.23 dB
40 dB ATTEN	–0.6 dB	_____	+0.6 dB	±0.23 dB
50 dB ATTEN	–0.6 dB	_____	+0.6 dB	±0.23 dB
60 dB ATTEN	–0.6 dB	_____	+0.6 dB	+0.24/–0.25 dB
70 dB ATTEN	–0.6 dB	_____	+0.6 dB	+0.24/–0.25 dB

ManualsPlus.com

Table 11-6 Performance Test Record (6 of 22)

Agilent Technologies

Select model: 8560E ___ 8560EC ___ Report No. _____

Serial No. _____ Date _____

Test Description	Results			Measurement Uncertainty
	Minimum	Measured	Maximum	
15. IF Gain Uncertainty				
LOG, 10 dB steps				
–10 dBm REF LVL	–1.0 dB	_____	+1.0 dB	±0.11 dB
–20 dBm REF LVL	–1.0 dB	_____	+1.0 dB	±0.11 dB
–30 dBm REF LVL	–1.0 dB	_____	+1.0 dB	±0.11 dB
–40 dBm REF LVL	–1.0 dB	_____	+1.0 dB	±0.11 dB
–50 dBm REF LVL	–1.0 dB	_____	+1.0 dB	±0.11 dB
–60 dBm REF LVL	–1.0 dB	_____	+1.0 dB	±0.12 dB
–70 dBm REF LVL	–1.0 dB	_____	+1.0 dB	±0.12 dB
–80 dBm REF LVL	–1.0 dB	_____	+1.0 dB	±0.12 dB
LOG, 1 dB steps				
–1 dBm REF LVL	–1.0 dB	_____	+1.0 dB	±0.11 dB
–2 dBm REF LVL	–1.0 dB	_____	+1.0 dB	±0.11 dB
–3 dBm REF LVL	–1.0 dB	_____	+1.0 dB	±0.11 dB
–4 dBm REF LVL	–1.0 dB	_____	+1.0 dB	±0.11 dB
–5 dBm REF LVL	–1.0 dB	_____	+1.0 dB	±0.11 dB
–6 dBm REF LVL	–1.0 dB	_____	+1.0 dB	±0.11 dB
–7 dBm REF LVL	–1.0 dB	_____	+1.0 dB	±0.11 dB
–8 dBm REF LVL	–1.0 dB	_____	+1.0 dB	±0.11 dB
–9 dBm REF LVL	–1.0 dB	_____	+1.0 dB	±0.11 dB
–10 dBm REF LVL	–1.0 dB	_____	+1.0 dB	±0.11 dB
–11 dBm REF LVL	–1.0 dB	_____	+1.0 dB	±0.11 dB
–12 dBm REF LVL	–1.0 dB	_____	+1.0 dB	±0.11 dB
LINEAR, 10 dB steps				
–10 dBm REF LVL	–1.0 dB	_____	+1.0 dB	±0.11 dB
–20 dBm REF LVL	–1.0 dB	_____	+1.0 dB	±0.11 dB
–30 dBm REF LVL	–1.0 dB	_____	+1.0 dB	±0.11 dB
–40 dBm REF LVL	–1.0 dB	_____	+1.0 dB	±0.11 dB

ManualsPlus.com

Table 11-7 Performance Test Record (7 of 22)

Agilent Technologies

Select model: 8560E ___ 8560EC ___ Report No. _____

Serial No. _____ Date _____

Test Description	Results			Measurement Uncertainty
	Minimum	Measured	Maximum	
15. IF Gain Uncertainty (continued)				
LINEAR, 10 dB steps (cont'd)				
–50 dBm REF LVL	–1.0 dB	_____	+1.0 dB	±0.11 dB
–60 dBm REF LVL	–1.0 dB	_____	+1.0 dB	±0.12 dB
–70 dBm REF LVL	–1.0 dB	_____	+1.0 dB	±0.12 dB
–80 dBm REF LVL	–1.0 dB	_____	+1.0 dB	±0.12 dB
16. Scale Fidelity				
Cumulative, 10 dB/Div,				
RES BW ≥300 Hz				
–6 dB from REF LVL	–0.60 dB	_____	+0.60 dB	±0.24 dB
–12 dB from REF LVL	–0.85 dB	_____	+0.85 dB	±0.24 dB
–18 dB from REF LVL	–0.85 dB	_____	+0.85 dB	±0.24 dB
–24 dB from REF LVL	–0.85 dB	_____	+0.85 dB	±0.24 dB
–30 dB from REF LVL	–0.85 dB	_____	+0.85 dB	±0.24 dB
–36 dB from REF LVL	–0.85 dB	_____	+0.85 dB	±0.24 dB
–42 dB from REF LVL	–0.85 dB	_____	+0.85 dB	±0.24 dB
–48 dB from REF LVL	–0.85 dB	_____	+0.85 dB	±0.24 dB
–54 dB from REF LVL	–0.85 dB	_____	+0.85 dB	±0.24 dB
–60 dB from REF LVL	–0.85 dB	_____	+0.85 dB	+0.25/–0.26 dB
–66 dB from REF LVL	–0.85 dB	_____	+0.85 dB	+0.25/–0.26 dB
–72 dB from REF LVL	–0.85 dB	_____	+0.85 dB	+0.25/–0.26 dB
–78 dB from REF LVL	–0.85 dB	_____	+0.85 dB	+0.25/–0.26 dB
–84 dB from REF LVL	–0.85 dB	_____	+0.85 dB	+0.25/–0.26 dB
–90 dB from REF LVL	–0.85 dB	_____	+0.85 dB	+0.25/–0.26 dB

ManualsPlus.com

Table 11-8 Performance Test Record (8 of 22)

Agilent Technologies

Select model: 8560E ___ 8560EC ___ Report No. _____

Serial No. _____ Date _____

Test Description	Results			Measurement Uncertainty
	Minimum	Measured	Maximum	
16. Scale Fidelity (continued)				
Incremental, 10 dB/Div,				
RES BW ≥300 Hz				
–12 dB from REF LVL	–0.10 dB	_____	+0.10 dB	±0.04 dB
–18 dB from REF LVL	–0.10 dB	_____	+0.10 dB	±0.04 dB
–24 dB from REF LVL	–0.10 dB	_____	+0.10 dB	±0.04 dB
–30 dB from REF LVL	–0.10 dB	_____	+0.10 dB	±0.04 dB
–36 dB from REF LVL	–0.10 dB	_____	+0.10 dB	±0.04 dB
–42 dB from REF LVL	–0.10 dB	_____	+0.10 dB	±0.04 dB
–48 dB from REF LVL	–0.10 dB	_____	+0.10 dB	±0.04 dB
–54 dB from REF LVL	–0.10 dB	_____	+0.10 dB	±0.04 dB
–60 dB from REF LVL	–0.10 dB	_____	+0.10 dB	±0.04 dB
–66 dB from REF LVL	–0.10 dB	_____	+0.10 dB	±0.04 dB
–72 dB from REF LVL	–0.10 dB	_____	+0.10 dB	±0.05 dB
–78 dB from REF LVL	–0.10 dB	_____	+0.10 dB	±0.05 dB
–84 dB from REF LVL	–0.10 dB	_____	+0.10 dB	±0.05 dB
–90 dB from REF LVL	–0.10 dB	_____	+0.10 dB	±0.05 dB
Cumulative, 10 dB/Div,				
RES BW ≤100 Hz				
–6 dB from REF LVL	–0.60 dB	_____	+0.60 dB	±0.24 dB
–12 dB from REF LVL	–0.85 dB	_____	+0.85 dB	±0.24 dB
–18 dB from REF LVL	–0.85 dB	_____	+0.85 dB	±0.24 dB
–24 dB from REF LVL	–0.85 dB	_____	+0.85 dB	±0.24 dB
–30 dB from REF LVL	–0.85 dB	_____	+0.85 dB	±0.24 dB
–36 dB from REF LVL	–0.85 dB	_____	+0.85 dB	±0.24 dB
–42 dB from REF LVL	–0.85 dB	_____	+0.85 dB	±0.24 dB
–48 dB from REF LVL	–0.85 dB	_____	+0.85 dB	±0.24 dB
–54 dB from REF LVL	–0.85 dB	_____	+0.85 dB	±0.24 dB

ManualsPlus.com

Table 11-9 Performance Test Record (9 of 22)

Agilent Technologies

Select model: 8560E ___ 8560EC ___ Report No. _____

Serial No. _____ Date _____

Test Description	Results			Measurement Uncertainty
	Minimum	Measured	Maximum	
16. Scale Fidelity (continued)				
Cumulative, 10 dB/Div,				
RES BW ≤100 Hz (cont')				
–60 dB from REF LVL	–0.85 dB	_____	+0.85 dB	+0.25/–0.26 dB
–66 dB from REF LVL	–0.85 dB	_____	+0.85 dB	+0.25/–0.26 dB
–72 dB from REF LVL	–0.85 dB	_____	+0.85 dB	+0.25/–0.26 dB
–78 dB from REF LVL	–0.85 dB	_____	+0.85 dB	+0.25/–0.26 dB
–84 dB from REF LVL	–0.85 dB	_____	+0.85 dB	+0.25/–0.26 dB
–90 dB from REF LVL	–0.85 dB	_____	+0.85 dB	+0.25/–0.26 dB
–94 dB from REF LVL	–1.50 dB	_____	+1.50 dB	+0.25/–0.26 dB
–98 dB from REF LVL	–1.50 dB	_____	+1.50 dB	+0.25/–0.26 dB
Incremental, 10 dB/Div,				
RES BW ≤100 Hz				
–12 dB from REF LVL	–0.20 dB	_____	+0.20 dB	±0.04 dB
–18 dB from REF LVL	–0.20 dB	_____	+0.20 dB	±0.04 dB
–24 dB from REF LVL	–0.20 dB	_____	+0.20 dB	±0.04 dB
–30 dB from REF LVL	–0.20 dB	_____	+0.20 dB	±0.04 dB
–36 dB from REF LVL	–0.20 dB	_____	+0.20 dB	±0.04 dB
–42 dB from REF LVL	–0.20 dB	_____	+0.20 dB	±0.04 dB
–48 dB from REF LVL	–0.20 dB	_____	+0.20 dB	±0.04 dB
–54 dB from REF LVL	–0.20 dB	_____	+0.20 dB	±0.04 dB
–60 dB from REF LVL	–0.20 dB	_____	+0.20 dB	±0.04 dB
–66 dB from REF LVL	–0.20 dB	_____	+0.20 dB	±0.04 dB
–72 dB from REF LVL	–0.20 dB	_____	+0.20 dB	±0.05 dB
–78 dB from REF LVL	–0.20 dB	_____	+0.20 dB	±0.05 dB
–84 dB from REF LVL	–0.20 dB	_____	+0.20 dB	±0.05 dB
–90 dB from REF LVL	–0.20 dB	_____	+0.20 dB	±0.05 dB

ManualsPlus.com

Table 11-10 Performance Test Record (10 of 22)

Agilent Technologies

Select model: 8560E ___ 8560EC ___ Report No. _____

Serial No. _____ Date _____

Test Description	Results			Measurement Uncertainty
	Minimum	Measured	Maximum	
16. Scale Fidelity (continued)				
Cumulative, 2 dB/Div				
–2 dB from REF LVL	–0.20 dB	_____	+0.20 dB	±0.053 dB
–4 dB from REF LVL	–0.40 dB	_____	+0.40 dB	±0.053 dB
–6 dB from REF LVL	–0.60 dB	_____	+0.60 dB	±0.053 dB
–8 dB from REF LVL	–0.80 dB	_____	+0.80 dB	±0.053 dB
–10 dB from REF LVL	–0.85 dB	_____	+0.85 dB	±0.053 dB
–12 dB from REF LVL	–0.85 dB	_____	+0.85 dB	±0.053 dB
–14 dB from REF LVL	–0.85 dB	_____	+0.85 dB	±0.053 dB
–16 dB from REF LVL	–0.85 dB	_____	+0.85 dB	±0.053 dB
–18 dB from REF LVL	–0.85 dB	_____	+0.85 dB	±0.053 dB
Incremental, 2 dB/Div				
–2 dB from REF LVL	–0.10 dB	_____	+0.10 dB	±0.04 dB
–4 dB from REF LVL	–0.10 dB	_____	+0.10 dB	±0.04 dB
–6 dB from REF LVL	–0.10 dB	_____	+0.10 dB	±0.04 dB
–8 dB from REF LVL	–0.10 dB	_____	+0.10 dB	±0.04 dB
–10 dB from REF LVL	–0.10 dB	_____	+0.10 dB	±0.04 dB
–12 dB from REF LVL	–0.10 dB	_____	+0.10 dB	±0.04 dB
–14 dB from REF LVL	–0.10 dB	_____	+0.10 dB	±0.04 dB
–16 dB from REF LVL	–0.10 dB	_____	+0.10 dB	±0.04 dB
–18 dB from REF LVL	–0.10 dB	_____	+0.10 dB	±0.04 dB
Linear				
–2 dB from REF LVL	–2.33 dB	_____	–1.68 dB	±0.04 dB
–4 dB from REF LVL	–4.42 dB	_____	–3.60 dB	±0.04 dB
–6 dB from REF LVL	–6.54 dB	_____	–5.50 dB	±0.04 dB
–8 dB from REF LVL	–8.68 dB	_____	–7.37 dB	±0.04 dB
–10 dB from REF LVL	–10.87 dB	_____	–9.21 dB	±0.04 dB
–12 dB from REF LVL	–13.10 dB	_____	–11.02 dB	±0.04 dB

ManualsPlus.com

Table 11-11 Performance Test Record (11 of 22)

Agilent Technologies

Select model: 8560E ___ 8560EC ___ Report No. _____

Serial No. _____ Date _____

Test Description	Results			Measurement Uncertainty
	Minimum	Measured	Maximum	
16. Scale Fidelity (continued)				
Cumulative, 2 dB/Div (cont')				
–14 dB from REF LVL	–15.42 dB	_____	–12.78 dB	±0.033 dB
–16 dB from REF LVL	–17.82 dB	_____	–14.49 dB	±0.033 dB
–18 dB from REF LVL	–20.36 dB	_____	–16.14 dB	±0.033 dB
17. Residual FM				
Non-Option 103		_____	1 Hz	±0.2 Hz
Option 103		_____	10 Hz	±0.8 Hz
19. Noise Sidebands				
Non-Option 103				
+100 Hz offset (serial prefix <3424A)		_____	–80 dBc/Hz	+1.22/–1.34 dB
+100 Hz offset (serial prefix ≥3424A)		_____	–88 dBc/Hz	+1.22/–1.34 dB
–100 Hz offset (serial prefix <3424A)		_____	–80 dBc/Hz	+1.22/–1.34 dB
–100 Hz offset (serial prefix ≥3424A)		_____	–88 dBc/Hz	+1.22/–1.34 dB
+1 kHz offset		_____	–97 dBc/Hz	+1.22/–1.34 dB
–1 kHz offset		_____	–97 dBc/Hz	+1.22/–1.34 dB
+10 kHz offset		_____	–113 dBc/Hz	+1.22/–1.34 dB
–10 kHz offset		_____	–113 dBc/Hz	+1.22/–1.34 dB
+30 kHz offset		_____	–113 dBc/Hz	+1.22/–1.34 dB
–30 kHz offset		_____	–113 dBc/Hz	+1.22/–1.34 dB
+100 kHz offset (serial prefix <3424A)		_____	–113 dBc/Hz	+1.22/–1.34 dB
+100 kHz offset (serial prefix ≥3424A)		_____	–117 dBc/Hz	+1.22/–1.34 dB
–100 kHz offset (serial prefix <3424A)		_____	–113 dBc/Hz	+1.22/–1.34 dB

ManualsPlus.com

Table 11-12 Performance Test Record (12 of 22)

Agilent Technologies

Select model: 8560E ___ 8560EC ___ Report No. _____

Serial No. _____ Date _____

Test Description	Results			Measurement Uncertainty
	Minimum	Measured	Maximum	
19. Noise Sidebands (continued)				
Non-Option 103 (cont'd)				
–100 kHz offset (serial prefix ≥3424A)		_____	–117 dBc/Hz	+1.22/–1.34 dB
Option 103				
+100 Hz offset		_____	–70 dBc/Hz	+1.22/–1.34 dB
–100 Hz offset		_____	–70 dBc/Hz	+1.22/–1.34 dB
+1 kHz offset		_____	–90 dBc/Hz	+1.22/–1.34 dB
–1 kHz offset		_____	–90 dBc/Hz	+1.22/–1.34 dB
+10 kHz offset		_____	–113 dBc/Hz	+1.22/–1.34 dB
–10 kHz offset		_____	–113 dBc/Hz	+1.22/–1.34 dB
+30 kHz offset		_____	–113 dBc/Hz	+1.22/–1.34 dB
–30 kHz offset		_____	–113 dBc/Hz	+1.22/–1.34 dB
+100 kHz offset (serial prefix <3424A)		_____	–113 dBc/Hz	+1.22/–1.34 dB
+100 kHz offset (serial prefix ≥3424A)		_____	–117 dBc/Hz	+1.22/–1.34 dB
–100 kHz offset (serial prefix <3424A)		_____	–113 dBc/Hz	+1.22/–1.34 dB
–100 kHz offset (serial prefix ≥3424A)		_____	–117 dBc/Hz	+1.22/–1.34 dB
20. Image, Multiple, and Out-of-Range Responses				
2 GHz CENTER FREQ				
2021.4 MHz		_____	–80 dBc	+0.8/–1.0 dB
2621.4 MHz		_____	–80 dBc	+0.8/–1.0 dB
2321.4 MHz		_____	–80 dBc	+0.8/–1.0 dB
2600.0 MHz		_____	–80 dBc	+0.8/–1.0 dB
7910.7 MHz		_____	–80 dBc	+0.8/–1.0 dB

ManualsPlus.com

Table 11-13 Performance Test Record (13 of 22)

Agilent Technologies

Select model: 8560E ___ 8560EC ___ Report No. _____

Serial No. _____ Date _____

Test Description	Results			Measurement Uncertainty
	Minimum	Measured	Maximum	
20. Image, Multiple, and Out-of-Range Responses (continued)				
2 GHz CENTER FREQ (cont'd)				
9821.4 MHz		_____	–80 dBc	+0.8/–1.0 dB
4 GHz CENTER FREQ				
4021.4 MHz		_____	–80 dBc	+0.8/–1.0 dB
4621.4 MHz		_____	–80 dBc	+0.8/–1.0 dB
4321.4 MHz		_____	–80 dBc	+0.8/–1.0 dB
4600.0 MHz		_____	–80 dBc	+0.8/–1.0 dB
289.3 MHz		_____	–80 dBc	+0.8/–1.0 dB
8310.7 MHz		_____	–80 dBc	+0.8/–1.0 dB
8932.1 MHz		_____	–80 dBc	+0.8/–1.0 dB
26. Frequency Readout Accuracy and Frequency Count Marker Accuracy				
Frequency Readout Accuracy:				
1.5 GHz CENTER FREQ				
1 MHz SPAN	1.499988 GHz	_____	1.500012 GHz	±1 Hz
10 MHz SPAN	1.49948 GHz	_____	1.50052 GHz	±1 Hz
20 MHz SPAN	1.49895 GHz	_____	1.50105 GHz	±1 Hz
50 MHz SPAN	1.49745 GHz	_____	1.50255 GHz	±1 Hz
100 MHz SPAN	1.4948 GHz	_____	1.5052 GHz	±1 Hz
1 GHz SPAN	1.450 GHz	_____	1.550 GHz	±1 Hz
Frequency Count Marker Accuracy:				
1.5 GHz CENTER FREQ	1.499999997 GHz	_____	1.500000003 GHz	±1 Hz

ManualsPlus.com

Table 11-14 Performance Test Record (14 of 22)

Agilent Technologies

Select model: 8560E ___ 8560EC ___ Report No. _____

Serial No. _____ Date _____

Test Description	Results			Measurement Uncertainty
	Minimum	Measured	Maximum	
32. Pulse Digitization Uncertainty				
LOG 5dB/Div				
1 MHz RES BW		_____	1.25 dB	±0.15 dB
2 MHz RES BW		_____	3.0 dB	+0.43/–0.44 dB
LINEAR				
1 MHz RES BW		_____	4%	±0.31%
2 MHz RES BW		_____	12%	±0.65%
33. Second Harmonic Distortion (SHD)				
Serial Prefix < 3632A		_____	–72 dBc	+1.87/–2.28 dB
Serial Prefix ≥ 3632A		_____	–79 dBc	+1.87/–2.28 dB
Option H13		_____	–79 dBc	+1.87/–2.28 dB
36. Frequency Response				
dc coupled				
Maximum Positive Response		_____	+1.5 dB	+0.32/–0.34 dB
Maximum Negative Response	–1.5 dB	_____		+0.32/–0.34 dB
Peak-to-Peak Response		_____	2.0 dB	+0.32/–0.34 dB
ac coupled				
Maximum Positive Response		_____	+1.7 dB	+0.44/–0.49 dB
Maximum Negative Response	–1.7 dB	_____		+0.44/–0.49 dB
Peak-to-Peak Response		_____	2.8 dB	+0.44/–0.49 dB
dc coupled, 100 MHz to 2.9 GHz				
(serial prefix ≥3628A)				
Peak-to-Peak Response		_____	1.4 dB	+0.32/–0.34 dB

ManualsPlus.com

Table 11-15 Performance Test Record (15 of 22)

Agilent Technologies

Select model: 8560E ___ 8560EC ___ Report No. _____

Serial No. _____ Date _____

Test Description	Results			Measurement Uncertainty
	Minimum	Measured	Maximum	
42. Frequency Span Accuracy				
1 kHz SPAN	–1 %	_____	+1 %	±0.24 %
2 kHz SPAN	–1 %	_____	+1 %	±0.24 %
5 kHz SPAN	–1 %	_____	+1 %	±0.24 %
10 kHz SPAN	–1 %	_____	+1 %	±0.24 %
20 kHz SPAN	–1 %	_____	+1 %	±0.24 %
50 kHz SPAN	–1 %	_____	+1 %	±0.24 %
100 kHz SPAN	–1 %	_____	+1 %	±0.24 %
200 kHz SPAN	–1 %	_____	+1 %	±0.24 %
500 kHz SPAN	–1 %	_____	+1 %	±0.24 %
1 MHz SPAN	–1 %	_____	+1 %	±0.24 %
2 MHz SPAN	–1 %	_____	+1 %	±0.24 %
5 MHz SPAN	–5 %	_____	+5 %	±0.24 %
10 MHz SPAN	–5 %	_____	+5 %	±0.24 %
20 MHz SPAN	–5 %	_____	+5 %	±0.24 %
50 MHz SPAN	–5 %	_____	+5 %	±0.24 %
100 MHz SPAN	–5 %	_____	+5 %	±0.24 %
200 MHz SPAN	–5 %	_____	+5 %	±0.24 %
500 MHz SPAN	–5 %	_____	+5 %	±0.24 %
43. Third Order Intermodulation Distortion				
TOI Distortion				
Serial Prefix <3632A		_____	–78 dBc	+1.41/–1.43 dB
Serial Prefix ≥3632A		_____	–82 dBc	+1.41/–1.43 dB
Option H13		_____	–82 dBc	+1.41/–1.43 dB
47. Gain Compression				
Gain Compression		_____	1 dB	±0.19 dB

ManualsPlus.com

Table 11-16 Performance Test Record (16 of 22)

Agilent Technologies

Select model: 8560E ___ 8560EC ___ Report No. _____

Serial No. _____ Date _____

Test Description	Results			Measurement Uncertainty
	Minimum	Measured	Maximum	
51. 1ST LO OUTPUT Amplitude				
Non-Option 002:				
Maximum 1ST LO OUTPUT AMPLITUDE		_____	+18.5 dBm	±0.18 dB
Minimum 1ST LO OUTPUT AMPLITUDE	+14.5 dBm	_____		±0.18 dB
Option 002:				
Maximum 1ST LO OUTPUT AMPLITUDE		_____	+17.5 dBm	±0.18 dB
Minimum 1ST LO OUTPUT AMPLITUDE	+11.5 dBm	_____		±0.18 dB
53. Sweep Time Accuracy				
50 µs SWEEP TIME†	42.5 µs	_____	57.5 µs	±750 ns
100 µs SWEEP TIME†	85.0 µs	_____	115 µs	±1.5 µs
200 µs SWEEP TIME†	170 µs	_____	230 µs	±3.0 µs
500 µs SWEEP TIME†	425 µs	_____	575 µs	±7.5 µs
1 ms SWEEP TIME†	850 µs	_____	1.15 ms	±15 µs
2 ms SWEEP TIME†	1.70 ms	_____	2.30 ms	±30 µs
5 ms SWEEP TIME†	4.25 ms	_____	5.75 ms	±75 µs
10 ms SWEEP TIME†	8.50 ms	_____	11.5 ms	±150 µs
20 ms SWEEP TIME†	17.0 ms	_____	23.0 ms	±300 µs
30 ms SWEEP TIME	29.7 ms	_____	30.3 ms	±209 ns

† These entries apply only to E-Series spectrum analyzers without Option 007.

ManualsPlus.com

Table 11-17 Performance Test Record (17 of 22)

Agilent Technologies

Select model: 8560E ___ 8560EC ___ Report No. _____

Serial No. _____ Date _____

Test Description	Results			Measurement Uncertainty
	Minimum	Measured	Maximum	
53. Sweep Time Accuracy (continued)				
50 ms SWEEP TIME	49.5 ms	_____	50.5 ms	±281 ns
100 ms SWEEP TIME	99.0 ms	_____	101.0 ms	±461 ns
200 ms SWEEP TIME	198.0 ms	_____	202.0 ms	±821 ns
500 ms SWEEP TIME	495.0 ms	_____	505.0 ms	±1.901 µs
1 s SWEEP TIME	990.0 ms	_____	1.010 s	±3.7 µs
2 s SWEEP TIME	1.980 s	_____	2.020 s	±7.3 µs
5 s SWEEP TIME	4.950 s	_____	5.050 s	±18.1 µs
10 s SWEEP TIME	9.900 s	_____	10.10 s	±36.1 µs
20 s SWEEP TIME	19.80 s	_____	20.20 s	±72.1 µs
50 s SWEEP TIME	49.50 s	_____	50.50 s	±180.1 µs
100 s SWEEP TIME	99.00 s	_____	101.0 s	±360.1 µs
54. Residual Responses				
200 kHz to 2.9 GHz		_____	–90 dBm	+1.24/–1.37 dB
57. IF INPUT Amplitude Accuracy				
(Non-Option 002 and non-Option 327 only)				
IF INPUT Amplitude	–31.5 dBm	_____	–28.5 dBm	+0.40/–0.44 dB
58. Gate Delay Accuracy and Gate Length Accuracy				
Serial prefix <3310A				
20 °C to 30 °C:				
MIN Gate Delay	1.9985 µs	_____	4.0015 µs	±21 ns
MAX Gate Delay	1.9985 µs	_____	4.0015 µs	±21 ns
1 µs Gate Length	799.5 ns	_____	1200.5 ns	±11 ns
65 ms Gate Length	64.967 ms	_____	65.033 ms	±752 ns

ManualsPlus.com

Table 11-18 Performance Test Record (18 of 22)

Agilent Technologies

Select model: 8560E ___ 8560EC ___ Report No. _____

Serial No. _____ Date _____

Test Description	Results			Measurement Uncertainty
	Minimum	Measured	Maximum	
58. Gate Delay Accuracy and Gate Length Accuracy (continued)				
Serial prefix <3310A (cont'd)				
–10 °C to 55 °C:				
MIN Gate Delay	1.9964 µs	_____	4.0036 µs	±21 ns
MAX Gate Delay	1.9964 µs	_____	4.0036 µs	±21 ns
1 µs Gate Length	798.8 ns	_____	1201.2 ns	±11 ns
65 ms Gate Length	64.922 ms	_____	65.078 ms	±752 ns
Serial prefix ≥3310A				
MIN Gate Delay	2.0000 µs	_____	4.0000 µs	±21 ns
MAX Gate Delay	2.0000 µs	_____	4.0000 µs	±21 ns
1 µs Gate Length	0.0000 ns	_____	2.0000 µs	±11 ns
65 ms Gate Length	64.999 ms	_____	65.001 ms	±752 ns
59. Delayed Sweep Accuracy				
Serial Prefix <3310A				
20 °C to 30 °C:				
1000 µs	998.5 µs	_____	1001.5 µs	±114 ns
2000 µs	1998 µs	_____	2002 µs	±124 ns
5000 µs	4996.5 µs	_____	5003.5 µs	±154 ns
10000 µs	9994 µs	_____	10006 µs	±204 ns
20000 µs	19989 µs	_____	20011 µs	±304 ns
50000 µs	49974 µs	_____	50026 µs	±604 ns
65000 µs	64966.5 µs	_____	65033.5 µs	±754 ns
–10 °C to 55 °C:				
1000 µs	997.8 µs	_____	1002.2 µs	±114 ns
2000 µs	1996.6 µs	_____	2003.4 µs	±124 ns
5000 µs	4993 µs	_____	5007 µs	±154 ns

ManualsPlus.com

Table 11-19 Performance Test Record (19 of 22)

Agilent Technologies

Select model: 8560E ___ 8560EC ___ Report No. _____

Serial No. _____ Date _____

Test Description	Results			Measurement Uncertainty
	Minimum	Measured	Maximum	
59. Delayed Sweep Accuracy (continued)				
Serial Prefix <3310A (cont'd)				
–10 °C to 55 °C: (cont'd)				
10000 µs	9987 µs	_____	10013 µs	±204 ns
20000 µs	19975 µs	_____	20025 µs	±304 ns
50000 µs	49939 µs	_____	50061 µs	±604 ns
65000 µs	64922 µs	_____	65078 µs	±754 ns
Serial Prefix ≥3310A				
1000 µs	999 µs	_____	1001 µs	±114 ns
2000 µs	1999 µs	_____	2001 µs	±124 ns
5000 µs	4999 µs	_____	5001 µs	±154 ns
10000 µs	9999 µs	_____	10001 µs	±204 ns
20000 µs	19999 µs	_____	20001 µs	±304 ns
50000 µs	49999 µs	_____	50001 µs	±604 ns
65000 µs	64999 µs	_____	65001 µs	±754 ns
60. Tracking Generator Level Flatness (Option 002)				
Maximum Flatness		_____	+2.0 dB	±0.414 dB
Minimum Flatness	–2.0 dB	_____		±0.414 dB
61. Tracking Generator Absolute Amplitude and Vernier Accuracy (Option 002)				
Absolute Amplitude Accuracy	–0.75 dB	_____	+0.75 dB	±0.154 dB
Positive Absolute Vernier Accuracy		_____	+0.5 dB	±0.033 dB

ManualsPlus.com

Table 11-20 Performance Test Record (20 of 22)

Agilent Technologies

Select model: 8560E ___ 8560EC ___ Report No. _____

Serial No. _____ Date _____

Test Description	Results			Measurement Uncertainty
	Minimum	Measured	Maximum	
61. Tracking Generator Absolute Amplitude and Vernier Accuracy (Option 002) (continued)				
Negative Absolute				
Vernier Accuracy	–0.5 dB	_____		±0.033 dB
Positive Step-to-Step				
Vernier Accuracy		_____	+0.2 dB	±0.033 dB
Negative Step-to-Step				
Vernier Accuracy	–0.2 dB	_____		±0.033 dB
62. Tracking Generator Maximum Levelled Output Power (Option 002)				
Max Leveled Output				
Power	+1.0 dBm	_____		±0.0 dB
63. Tracking Generator Power Sweep Range (Option 002)				
Power Sweep Range	10 dB	_____		±0.049 dB
64. Tracking Generator RF-Power-Off Residuals (Option 002)				
Residual Response				
Amplitude				
if < 2.5 GHz		_____	–78 dBm	+1.33/–1.56 dB
if > 2.5 GHz		_____	–78 dBm	+2.02/–2.50 dB
Residual Response				
Frequency		_____	(MHz)	

ManualsPlus.com

Table 11-21 Performance Test Record (21 of 22)

Agilent Technologies

Select model: 8560E ___ 8560EC ___ Report No. _____

Serial No. _____ Date _____

Test Description	Results			Measurement Uncertainty
	Minimum	Measured	Maximum	
65. Tracking Generator Harmonic Spurious Outputs (Option 002)				
2nd Harmonic Response Level		_____	–25 dBc	+1.55/–1.80 dB
3rd Harmonic Response Level		_____	–25 dBc	+1.55/–1.80 dB
66. Tracking Generator Non-Harmonic Spurious Outputs (Option 002)				
Non-Harmonic Response Amplitude (<=2000 MHz)		_____	–27 dBc	+1.55/–1.80 dB
Non-Harmonic Response Amplitude (>2000 MHz)		_____	–23 dBc	+3.48/–4.01 dB
67. Tracking Generator LO Feedthrough Amplitude (Option 002)				
LO Feedthrough at 3.911 GHz		_____	–16 dBm	+2.02/–2.50 dB
LO Feedthrough at 6.8107 GHz		_____	–16 dBm	+2.10/–2.67 dB
68. Tracking Generator Feedthrough (Option 002)				
300 kHz to 1 MHz		_____	–95 dBm	+1.24/–1.37 dB
1 MHz to 2 GHz		_____	–115 dBm	+1.24/–1.37 dB
2 GHz to 2.9 GHz		_____	–110 dBm	+1.24/–1.37 dB

ManualsPlus.com

Table 11-22 Performance Test Record (22 of 22)

Agilent Technologies Company

Select model: 8560E ___ 8560EC ___ Report No. _____

Serial No. _____ Date _____

Test Description	Results			Measurement Uncertainty
	Minimum	Measured	Maximum	
69. Tracking Generator Frequency Tracking Range (Option 002)				
Negative Frequency Variation		_____	–5 kHz	±1 Hz
Positive Frequency Variation	+5 kHz	_____		±1 Hz
70. Tracking Generator Frequency Accuracy (Option 002)				
Frequency Error	–295 Hz	_____	+295 Hz	±1 Hz

ManualsPlus.com

ManualsPlus.com

12 8561E/EC Performance Test Record

ManualsPlus.com

Test Record

Table 12-1 8561E/EC Performance Test Record

Agilent Technologies
Address:
_____
_____
_____

Report No. _____

Date _____
(e.g. 10 SEP 1989)

Select model: 8561E ___ 8561EC ___
Serial No. _____
Firmware Revision _____

Options _____

Customer _____
Ambient temperature _____ °C
Power mains line frequency _____ Hz (nominal)

Tested by _____
Relative humidity_____%

Test Equipment Used

Description	Model No.	Trace No.	Cal Due Date
Synthesized Sweeper #1			
Synthesized Sweeper #2			
Synthesized Signal Generator			
Synthesizer/Level Generator			
Frequency Standard			
Measuring Receiver			
RF Power Sensor			
Low-Power Power Sensor			
Microwave Power Sensor			
Pulse/Function Generator			
Microwave Frequency Counter			
Universal Frequency Counter			
Oscilloscope			
Amplifier			
Power Splitter			
4.4 GHz Low-Pass Filter			
50 MHz Low-Pass Filter			
50 Ω Termination			
20 dB Fixed Attenuator			
10 dB Fixed Attenuator			
10 dB Step Attenuator			
1 dB Step Attenuator			
Digital Voltmeter			
Function Generator			

Notes/Comments: _____
_____
_____

ManualsPlus.com

Table 12-2 Performance Test Record (2 of 20)

Agilent Technologies

Select model: 8561E ___ 8561EC ___ Report No. _____

Serial No. _____ Date _____

Test Description	Results			Measurement Uncertainty
	Minimum	Measured	Maximum	
1. 10 MHz Reference Output Accuracy (Non-Option 103)				
5-minute Warm-up Error (0 °C to +55 °C)	-1×10^{-7}	_____	$+1 \times 10^{-7}$	$\pm 2.004 \times 10^{-9}$
5-minute Warm-up Error (–10 °C to 0 °C)	-1×10^{-6}	_____	$+1 \times 10^{-6}$	$\pm 2.004 \times 10^{-9}$
15-minute Warm-up Error	-1×10^{-8}	_____	$+1 \times 10^{-8}$	$\pm 2.003 \times 10^{-9}$
2. 10 MHz Reference Output Accuracy (Option 103)				
Calibrator Frequency	299.9988 MHz	_____	300.0012 MHz	±55.75 Hz
3. Fast Sweep Time Accuracy (EC-Series or E-Series with Option 007)	299.700 MHz	_____	300.300 MHz	±55.75 Hz
4. Calibrator Amplitude Accuracy				
Calibrator Amplitude	–10.30 dBm	_____	+9.70 dB	±0.12 dB
6. Displayed Average Noise Level				
Non-Option 103:				
30 Hz		_____	–90 dBm	+1.24/–1.37 dB
100 Hz		_____	–90 dBm	+1.24/–1.37 dB
1 kHz		_____	–105 dBm	+1.24/–1.37 dB
10 kHz		_____	–120 dBm	+1.24/–1.37 dB
100 kHz		_____	–120 dBm	+1.24/–1.37 dB
1 MHz to 10 MHz		_____	–140 dBm	+1.24/–1.37 dB
10 MHz to 2.9 GHz		_____	–145 dBm	+1.24/–1.37 dB

ManualsPlus.com

Table 12-3 Performance Test Record (3 of 20)

Agilent Technologies

Select model: 8561E ___ 8561EC ___ Report No. _____

Serial No. _____ Date _____

Test Description	Results			Measurement Uncertainty
	Minimum	Measured	Maximum	
6. DANL (continued)				
Option 103:				
30 Hz		_____	–80 dBm	+1.24/–1.37 dB
100 Hz		_____	–80 dBm	+1.24/–1.37 dB
1 kHz		_____	–95 dBm	+1.24/–1.37 dB
10 kHz		_____	–110 dBm	+1.24/–1.37 dB
100 kHz		_____	–110 dBm	+1.24/–1.37 dB
1 MHz to 10 MHz		_____	–130 dBm	+1.24/–1.37 dB
10 MHz to 2.9 GHz		_____	–135 dBm	+1.24/–1.37 dB
11. Resolution Bandwidth Switching and IF Alignment Uncertainty				
2 MHz RES BW	–0.5 dB	_____	+0.5 dB	±0.10 dB
1 MHz RES BW	–0.5 dB	_____	+0.5 dB	±0.10 dB
100 kHz RES BW	–0.5 dB	_____	+0.5 dB	±0.10 dB
30 kHz RES BW	–0.5 dB	_____	+0.5 dB	±0.10 dB
10 kHz RES BW	–0.5 dB	_____	+0.5 dB	±0.10 dB
3 kHz RES BW	–0.5 dB	_____	+0.5 dB	±0.10 dB
1 kHz RES BW	–0.5 dB	_____	+0.5 dB	±0.10 dB
300 Hz RES BW	–1.0 dB	_____	+1.0 dB	±0.10 dB
100 Hz RES BW	–0.5 dB	_____	+0.5 dB	±0.10 dB
30 Hz RES BW	–0.5 dB	_____	+0.5 dB	±0.10 dB
10 Hz RES BW	–0.5 dB	_____	+0.5 dB	±0.10 dB
3 Hz RES BW*	–0.5 dB	_____	+0.5 dB	±0.10 dB
1 Hz RES BW*	–0.5 dB	_____	+0.5 dB	±0.10 dB

* 3 Hz and 1 Hz RES BW not available with Option 103.

ManualsPlus.com

Table 12-4 Performance Test Record (4 of 20)

Agilent Technologies

Select model: 8561E ___ 8561EC ___ Report No. _____

Serial No. _____ Date _____

Test Description	Results			Measurement Uncertainty
	Minimum	Measured	Maximum	
12. Resolution Bandwidth Accuracy and Selectivity				
3 dB Bandwidth Accuracy				
2 MHz RES BW	–25%	_____	+50%	±1.33%
1 MHz RES BW	–25%	_____	+25%	±1.33%
300 kHz RES BW	–10%	_____	+10%	±1.33%
100 kHz RES BW	–10%	_____	+10%	±1.33%
30 kHz RES BW	–10%	_____	+10%	±1.33%
10 kHz RES BW	–10%	_____	+10%	±1.33%
3 kHz RES BW	–10%	_____	+10%	±1.33%
1 kHz RES BW	–10%	_____	+10%	±1.33%
300 Hz RES BW	–10%	_____	+10%	±1.33%
Selectivity				
2 MHz RES BW		_____	15:1	±2.80%
1 MHz RES BW		_____	15:1	±2.80%
300 kHz RES BW		_____	15:1	±2.80%
100 kHz RES BW		_____	15:1	±2.80%
30 kHz RES BW		_____	15:1	±2.80%
10 kHz RES BW		_____	15:1	±2.80%
3 kHz RES BW		_____	15:1	±2.80%
1 kHz RES BW		_____	15:1	±2.80%
300 Hz RES BW		_____	15:1	±2.80%
13. Input Attenuator Switching Uncertainty				
Cumulative, 50 MHz				
20 dB ATTEN	–0.6 dB	_____	+0.6 dB	±0.12 dB
30 dB ATTEN	–1.2 dB	_____	+1.2 dB	±0.12 dB
40 dB ATTEN	–1.8 dB	_____	+1.8 dB	±0.12 dB
50 dB ATTEN	–1.8 dB	_____	+1.8 dB	±0.14 dB

ManualsPlus.com

Table 12-5 Performance Test Record (5 of 20)

Agilent Technologies

Select model: 8561E ___ 8561EC ___ Report No. _____

Serial No. _____ Date _____

Test Description	Results			Measurement Uncertainty
	Minimum	Measured	Maximum	
13. Input Attenuator Switching Uncertainty (continued)				
Cumulative, 50 MHz (cont'd)				
60 dB ATTEN	–1.8 dB	_____	+1.8 dB	±0.14 dB
70 dB ATTEN	–1.8 dB	_____	+1.8 dB	±0.14 dB
Incremental, 50 MHz				
20 dB ATTEN	–0.6 dB	_____	+0.6 dB	±0.12 dB
30 dB ATTEN	–0.6 dB	_____	+0.6 dB	±0.12 dB
40 dB ATTEN	–0.6 dB	_____	+0.6 dB	±0.12 dB
50 dB ATTEN	–0.6 dB	_____	+0.6 dB	±0.14 dB
60 dB ATTEN	–0.6 dB	_____	+0.6 dB	±0.14 dB
70 dB ATTEN	–0.6 dB	_____	+0.6 dB	±0.14 dB
Cumulative, 2.9 GHz				
20 dB ATTEN	–0.6 dB	_____	+0.6 dB	±0.23 dB
30 dB ATTEN	–1.2 dB	_____	+1.2 dB	±0.23 dB
40 dB ATTEN	–1.8 dB	_____	+1.8 dB	±0.23 dB
50 dB ATTEN	–1.8 dB	_____	+1.8 dB	±0.23 dB
60 dB ATTEN	–1.8 dB	_____	+1.8 dB	+0.24/–0.25 dB
70 dB ATTEN	–1.8 dB	_____	+1.8 dB	+0.24/–0.25 dB
Incremental, 2.9 GHz				
20 dB ATTEN	–0.6 dB	_____	+0.6 dB	±0.23 dB
30 dB ATTEN	–0.6 dB	_____	+0.6 dB	±0.23 dB
40 dB ATTEN	–0.6 dB	_____	+0.6 dB	±0.23 dB
50 dB ATTEN	–0.6 dB	_____	+0.6 dB	±0.23 dB
60 dB ATTEN	–0.6 dB	_____	+0.6 dB	+0.24/–0.25 dB
70 dB ATTEN	–0.6 dB	_____	+0.6 dB	+0.24/–0.25 dB

ManualsPlus.com

Table 12-6 Performance Test Record (6 of 20)

Agilent Technologies

Select model: 8561E ___ 8561EC ___ Report No. _____

Serial No. _____ Date _____

Test Description	Results			Measurement Uncertainty
	Minimum	Measured	Maximum	
15. IF Gain Uncertainty				
LOG, 10 dB steps				
–10 dBm REF LVL	–1.0 dB	_____	+1.0 dB	±0.11 dB
–20 dBm REF LVL	–1.0 dB	_____	+1.0 dB	±0.11 dB
–30 dBm REF LVL	–1.0 dB	_____	+1.0 dB	±0.11 dB
–40 dBm REF LVL	–1.0 dB	_____	+1.0 dB	±0.11 dB
–50 dBm REF LVL	–1.0 dB	_____	+1.0 dB	±0.11 dB
–60 dBm REF LVL	–1.0 dB	_____	+1.0 dB	±0.12 dB
–70 dBm REF LVL	–1.0 dB	_____	+1.0 dB	±0.12 dB
–80 dBm REF LVL	–1.0 dB	_____	+1.0 dB	±0.12 dB
LOG, 1 dB steps				
–1 dBm REF LVL	–1.0 dB	_____	+1.0 dB	±0.11 dB
–2 dBm REF LVL	–1.0 dB	_____	+1.0 dB	±0.11 dB
–3 dBm REF LVL	–1.0 dB	_____	+1.0 dB	±0.11 dB
–4 dBm REF LVL	–1.0 dB	_____	+1.0 dB	±0.11 dB
–5 dBm REF LVL	–1.0 dB	_____	+1.0 dB	±0.11 dB
–6 dBm REF LVL	–1.0 dB	_____	+1.0 dB	±0.11 dB
–7 dBm REF LVL	–1.0 dB	_____	+1.0 dB	±0.11 dB
–8 dBm REF LVL	–1.0 dB	_____	+1.0 dB	±0.11 dB
–9 dBm REF LVL	–1.0 dB	_____	+1.0 dB	±0.11 dB
–10 dBm REF LVL	–1.0 dB	_____	+1.0 dB	±0.11 dB
–11 dBm REF LVL	–1.0 dB	_____	+1.0 dB	±0.11 dB
–12 dBm REF LVL	–1.0 dB	_____	+1.0 dB	±0.11 dB
LINEAR, 10 dB steps				
–10 dBm REF LVL	–1.0 dB	_____	+1.0 dB	±0.11 dB
–20 dBm REF LVL	–1.0 dB	_____	+1.0 dB	±0.11 dB
–30 dBm REF LVL	–1.0 dB	_____	+1.0 dB	±0.11 dB
–40 dBm REF LVL	–1.0 dB	_____	+1.0 dB	±0.11 dB

ManualsPlus.com

Table 12-7 Performance Test Record (7 of 20)

Agilent Technologies

Select model: 8561E ___ 8561EC ___ Report No. _____

Serial No. _____ Date _____

Test Description	Results			Measurement Uncertainty
	Minimum	Measured	Maximum	
15. IF Gain Uncertainty (continued)				
LINEAR, 10 dB steps (cont'd)				
–50 dBm REF LVL	–1.0 dB	_____	+1.0 dB	±0.11 dB
–60 dBm REF LVL	–1.0 dB	_____	+1.0 dB	±0.12 dB
–70 dBm REF LVL	–1.0 dB	_____	+1.0 dB	±0.12 dB
–80 dBm REF LVL	–1.0 dB	_____	+1.0 dB	±0.12 dB
16. Scale Fidelity				
Cumulative, 10 dB/Div,				
RES BW ≥300 Hz				
–6 dB from REF LVL	–0.60 dB	_____	+0.60 dB	±0.24 dB
–12 dB from REF LVL	–0.85 dB	_____	+0.85 dB	±0.24 dB
–18 dB from REF LVL	–0.85 dB	_____	+0.85 dB	±0.24 dB
–24 dB from REF LVL	–0.85 dB	_____	+0.85 dB	±0.24 dB
–30 dB from REF LVL	–0.85 dB	_____	+0.85 dB	±0.24 dB
–36 dB from REF LVL	–0.85 dB	_____	+0.85 dB	±0.24 dB
–42 dB from REF LVL	–0.85 dB	_____	+0.85 dB	±0.24 dB
–48 dB from REF LVL	–0.85 dB	_____	+0.85 dB	±0.24 dB
–54 dB from REF LVL	–0.85 dB	_____	+0.85 dB	±0.24 dB
–60 dB from REF LVL	–0.85 dB	_____	+0.85 dB	+0.25/–0.26 dB
–66 dB from REF LVL	–0.85 dB	_____	+0.85 dB	+0.25/–0.26 dB
–72 dB from REF LVL	–0.85 dB	_____	+0.85 dB	+0.25/–0.26 dB
–78 dB from REF LVL	–0.85 dB	_____	+0.85 dB	+0.25/–0.26 dB
–84 dB from REF LVL	–0.85 dB	_____	+0.85 dB	+0.25/–0.26 dB
–90 dB from REF LVL	–0.85 dB	_____	+0.85 dB	+0.25/–0.26 dB

ManualsPlus.com

Table 12-8 Performance Test Record (8 of 20)

Agilent Technologies

Select model: 8561E ___ 8561EC ___ Report No. _____

Serial No. _____ Date _____

Test Description	Results			Measurement Uncertainty
	Minimum	Measured	Maximum	
16. Scale Fidelity (continued)				
Incremental, 10 dB/Div,				
RES BW ≥300 Hz				
–12 dB from REF LVL	–0.10 dB	_____	+0.10 dB	±0.04 dB
–18 dB from REF LVL	–0.10 dB	_____	+0.10 dB	±0.04 dB
–24 dB from REF LVL	–0.10 dB	_____	+0.10 dB	±0.04 dB
–30 dB from REF LVL	–0.10 dB	_____	+0.10 dB	±0.04 dB
–36 dB from REF LVL	–0.10 dB	_____	+0.10 dB	±0.04 dB
–42 dB from REF LVL	–0.10 dB	_____	+0.10 dB	±0.04 dB
–48 dB from REF LVL	–0.10 dB	_____	+0.10 dB	±0.04 dB
–54 dB from REF LVL	–0.10 dB	_____	+0.10 dB	±0.04 dB
–60 dB from REF LVL	–0.10 dB	_____	+0.10 dB	±0.04 dB
–66 dB from REF LVL	–0.10 dB	_____	+0.10 dB	±0.04 dB
–72 dB from REF LVL	–0.10 dB	_____	+0.10 dB	±0.05 dB
–78 dB from REF LVL	–0.10 dB	_____	+0.10 dB	±0.05 dB
–84 dB from REF LVL	–0.10 dB	_____	+0.10 dB	±0.05 dB
–90 dB from REF LVL	–0.10 dB	_____	+0.10 dB	±0.05 dB
Cumulative, 10 dB/Div,				
RES BW ≤100 Hz				
–6 dB from REF LVL	–0.60 dB	_____	+0.60 dB	±0.24 dB
–12 dB from REF LVL	–0.85 dB	_____	+0.85 dB	±0.24 dB
–18 dB from REF LVL	–0.85 dB	_____	+0.85 dB	±0.24 dB
–24 dB from REF LVL	–0.85 dB	_____	+0.85 dB	±0.24 dB
–30 dB from REF LVL	–0.85 dB	_____	+0.85 dB	±0.24 dB
–36 dB from REF LVL	–0.85 dB	_____	+0.85 dB	±0.24 dB
–42 dB from REF LVL	–0.85 dB	_____	+0.85 dB	±0.24 dB
–48 dB from REF LVL	–0.85 dB	_____	+0.85 dB	±0.24 dB
–54 dB from REF LVL	–0.85 dB	_____	+0.85 dB	±0.24 dB

ManualsPlus.com

Table 12-9 Performance Test Record (9 of 20)

Agilent Technologies

Select model: 8561E ___ 8561EC ___ Report No. _____

Serial No. _____ Date _____

Test Description	Results			Measurement Uncertainty
	Minimum	Measured	Maximum	
16. Scale Fidelity (continued)				
Cumulative, 10 dB/Div,				
RES BW ≤100 Hz (cont')				
–60 dB from REF LVL	–0.85 dB	_____	+0.85 dB	+0.25/–0.26 dB
–66 dB from REF LVL	–0.85 dB	_____	+0.85 dB	+0.25/–0.26 dB
–72 dB from REF LVL	–0.85 dB	_____	+0.85 dB	+0.25/–0.26 dB
–78 dB from REF LVL	–0.85 dB	_____	+0.85 dB	+0.25/–0.26 dB
–84 dB from REF LVL	–0.85 dB	_____	+0.85 dB	+0.25/–0.26 dB
–90 dB from REF LVL	–0.85 dB	_____	+0.85 dB	+0.25/–0.26 dB
–94 dB from REF LVL	–1.50 dB	_____	+1.50 dB	+0.25/–0.26 dB
–98 dB from REF LVL	–1.50 dB	_____	+1.50 dB	+0.25/–0.26 dB
Incremental, 10 dB/Div,				
RES BW ≤100 Hz				
–12 dB from REF LVL	–0.20 dB	_____	+0.20 dB	±0.04 dB
–18 dB from REF LVL	–0.20 dB	_____	+0.20 dB	±0.04 dB
–24 dB from REF LVL	–0.20 dB	_____	+0.20 dB	±0.04 dB
–30 dB from REF LVL	–0.20 dB	_____	+0.20 dB	±0.04 dB
–36 dB from REF LVL	–0.20 dB	_____	+0.20 dB	±0.04 dB
–42 dB from REF LVL	–0.20 dB	_____	+0.20 dB	±0.04 dB
–48 dB from REF LVL	–0.20 dB	_____	+0.20 dB	±0.04 dB
–54 dB from REF LVL	–0.20 dB	_____	+0.20 dB	±0.04 dB
–60 dB from REF LVL	–0.20 dB	_____	+0.20 dB	±0.04 dB
–66 dB from REF LVL	–0.20 dB	_____	+0.20 dB	±0.04 dB
–72 dB from REF LVL	–0.20 dB	_____	+0.20 dB	±0.05 dB
–78 dB from REF LVL	–0.20 dB	_____	+0.20 dB	±0.05 dB
–84 dB from REF LVL	–0.20 dB	_____	+0.20 dB	±0.05 dB
–90 dB from REF LVL	–0.20 dB	_____	+0.20 dB	±0.05 dB

ManualsPlus.com

Table 12-10 Performance Test Record (10 of 20)

Agilent Technologies

Select model: 8561E ___ 8561EC ___ Report No. _____

Serial No. _____ Date _____

Test Description	Results			Measurement Uncertainty
	Minimum	Measured	Maximum	
16. Scale Fidelity (continued)				
Cumulative, 2 dB/Div				
–2 dB from REF LVL	–0.20 dB	_____	+0.20 dB	±0.053 dB
–4 dB from REF LVL	–0.40 dB	_____	+0.40 dB	±0.053 dB
–6 dB from REF LVL	–0.60 dB	_____	+0.60 dB	±0.053 dB
–8 dB from REF LVL	–0.80 dB	_____	+0.80 dB	±0.053 dB
–10 dB from REF LVL	–0.85 dB	_____	+0.85 dB	±0.053 dB
–12 dB from REF LVL	–0.85 dB	_____	+0.85 dB	±0.053 dB
–14 dB from REF LVL	–0.85 dB	_____	+0.85 dB	±0.053 dB
–16 dB from REF LVL	–0.85 dB	_____	+0.85 dB	±0.053 dB
–18 dB from REF LVL	–0.85 dB	_____	+0.85 dB	±0.053 dB
Incremental, 2 dB/Div				
–2 dB from REF LVL	–0.10 dB	_____	+0.10 dB	±0.04 dB
–4 dB from REF LVL	–0.10 dB	_____	+0.10 dB	±0.04 dB
–6 dB from REF LVL	–0.10 dB	_____	+0.10 dB	±0.04 dB
–8 dB from REF LVL	–0.10 dB	_____	+0.10 dB	±0.04 dB
–10 dB from REF LVL	–0.10 dB	_____	+0.10 dB	±0.04 dB
–12 dB from REF LVL	–0.10 dB	_____	+0.10 dB	±0.04 dB
–14 dB from REF LVL	–0.10 dB	_____	+0.10 dB	±0.04 dB
–16 dB from REF LVL	–0.10 dB	_____	+0.10 dB	±0.04 dB
–18 dB from REF LVL	–0.10 dB	_____	+0.10 dB	±0.04 dB
Linear				
–2 dB from REF LVL	–2.33 dB	_____	–1.68 dB	±0.04 dB
–4 dB from REF LVL	–4.42 dB	_____	–3.60 dB	±0.04 dB
–6 dB from REF LVL	–6.54 dB	_____	–5.50 dB	±0.04 dB
–8 dB from REF LVL	–8.68 dB	_____	–7.37 dB	±0.04 dB
–10 dB from REF LVL	–10.87 dB	_____	–9.21 dB	±0.04 dB
–12 dB from REF LVL	–13.10 dB	_____	–11.02 dB	±0.04 dB

ManualsPlus.com

Table 12-11 Performance Test Record (11 of 20)

Agilent Technologies

Select model: 8561E ___ 8561EC ___ Report No. _____

Serial No. _____ Date _____

Test Description	Results			Measurement Uncertainty
	Minimum	Measured	Maximum	
16. Scale Fidelity (continued)				
Cumulative, 2 dB/Div (cont')				
–14 dB from REF LVL	–15.42 dB	_____	–12.78 dB	±0.04 dB
–16 dB from REF LVL	–17.82 dB	_____	–14.49 dB	±0.04 dB
–18 dB from REF LVL	–20.36 dB	_____	–16.14 dB	±0.04 dB
17. Residual FM				
Non-Option 103		_____	1 Hz	±0.2 Hz
Option 103		_____	10 Hz	±0.8 Hz
19. Noise Sidebands				
Non-Option 103				
+100 Hz offset (serial prefix <3424A)		_____	–80 dBc/Hz	+1.22/–1.34 dB
+100 Hz offset (serial prefix ≥3424A)		_____	–88 dBc/Hz	+1.22/–1.34 dB
–100 Hz offset (serial prefix <3424A)		_____	–80 dBc/Hz	+1.22/–1.34 dB
–100 Hz offset (serial prefix ≥3424A)		_____	–88 dBc/Hz	+1.22/–1.34 dB
+1 kHz offset		_____	–97 dBc/Hz	+1.22/–1.34 dB
–1 kHz offset		_____	–97 dBc/Hz	+1.22/–1.34 dB
+10 kHz offset		_____	–113 dBc/Hz	+1.22/–1.34 dB
–10 kHz offset		_____	–113 dBc/Hz	+1.22/–1.34 dB
+30 kHz offset		_____	–113 dBc/Hz	+1.22/–1.34 dB
–30 kHz offset		_____	–113 dBc/Hz	+1.22/–1.34 dB
+100 kHz offset (serial prefix <3424A)		_____	–113 dBc/Hz	+1.22/–1.34 dB
+100 kHz offset (serial prefix ≥3424A)		_____	–117 dBc/Hz	+1.22/–1.34 dB
–100 kHz offset (serial prefix <3424A)		_____	–113 dBc/Hz	+1.22/–1.34 dB

ManualsPlus.com

Table 12-12 Performance Test Record (12 of 20)

Agilent Technologies

Select model: 8561E ___ 8561EC ___ Report No. _____

Serial No. _____ Date _____

Test Description	Results			Measurement Uncertainty
	Minimum	Measured	Maximum	
19. Noise Sidebands (continued)				
Non-Option 103 (cont'd)				
–100 kHz offset (serial prefix ≥3424A)		_____	–117 dBc/Hz	+1.22/–1.34 dB
Option 103				
+100 Hz offset		_____	–70 dBc/Hz	+1.22/–1.34 dB
–100 Hz offset		_____	–70 dBc/Hz	+1.22/–1.34 dB
+1 kHz offset		_____	–90 dBc/Hz	+1.22/–1.34 dB
–1 kHz offset		_____	–90 dBc/Hz	+1.22/–1.34 dB
+10 kHz offset		_____	–113 dBc/Hz	+1.22/–1.34 dB
–10 kHz offset		_____	–113 dBc/Hz	+1.22/–1.34 dB
+30 kHz offset		_____	–113 dBc/Hz	+1.22/–1.34 dB
–30 kHz offset		_____	–113 dBc/Hz	+1.22/–1.34 dB
+100 kHz offset (serial prefix <3424A)		_____	–113 dBc/Hz	+1.22/–1.34 dB
+100 kHz offset (serial prefix ≥3424A)		_____	–117 dBc/Hz	+1.22/–1.34 dB
–100 kHz offset (serial prefix <3424A)		_____	–113 dBc/Hz	+1.22/–1.34 dB
–100 kHz offset (serial prefix ≥3424A)		_____	–117 dBc/Hz	+1.22/–1.34 dB
20. Image, Multiple, and Out-of-Range Responses				
2 GHz CENTER FREQ				
2021.4 MHz		_____	–80 dBc	+0.8/–1.0 dB
2621.4 MHz		_____	–80 dBc	+0.8/–1.0 dB
2321.4 MHz		_____	–80 dBc	+0.8/–1.0 dB
2600.0 MHz		_____	–80 dBc	+0.8/–1.0 dB
5600.0 MHz		_____	–80 dBc	+0.8/–1.0 dB

ManualsPlus.com

Table 12-13 Performance Test Record (13 of 20)

Agilent Technologies

Select model: 8561E ___ 8561EC ___ Report No. _____

Serial No. _____ Date _____

Test Description	Results			Measurement Uncertainty
	Minimum	Measured	Maximum	
20. Image, Multiple, and Out-of-Range Responses (continued)				
2 GHz CENTER FREQ (cont'd)				
6221.4 MHz		_____	–80 dBc	+0.8/–1.0 dB
7910.7 MHz		_____	–80 dBc	+0.8/–1.0 dB
9821.4 MHz		_____	–80 dBc	+0.8/–1.0 dB
4 GHz CENTER FREQ				
4021.4 MHz		_____	–80 dBc	+0.8/–1.0 dB
4621.4 MHz		_____	–80 dBc	+0.8/–1.0 dB
4321.4 MHz		_____	–80 dBc	+0.8/–1.0 dB
4600.0 MHz		_____	–80 dBc	+0.8/–1.0 dB
8310.7 MHz		_____	–80 dBc	+0.8/–1.0 dB
289.3 MHz		_____	–80 dBc	+0.8/–1.0 dB
8932.1 MHz		_____	–80 dBc	+0.8/–1.0 dB
26. Frequency Readout Accuracy and Frequency Count Marker Accuracy				
Frequency Readout Accuracy:				
1.5 GHz CENTER FREQ				
1 MHz SPAN	1.499988 GHz	_____	1.500012 GHz	±1 Hz
10 MHz SPAN	1.49948 GHz	_____	1.50052 GHz	±1 Hz
20 MHz SPAN	1.49895 GHz	_____	1.50105 GHz	±1 Hz
50 MHz SPAN	1.49745 GHz	_____	1.50255 GHz	±1 Hz
100 MHz SPAN	1.4948 GHz	_____	1.5052 GHz	±1 Hz
1 GHz SPAN	1.450 GHz	_____	1.550 GHz	±1 Hz

ManualsPlus.com

Table 12-14 Performance Test Record (14 of 20)

Agilent Technologies

Select model: 8561E ___ 8561EC ___ Report No. _____

Serial No. _____ Date _____

Test Description	Results			Measurement Uncertainty
	Minimum	Measured	Maximum	
26. Frequency Readout Accuracy and Frequency Count Marker Accuracy (continued)				
Frequency Readout Accuracy:				
4.0 GHz CENTER FREQ				
1 MHz SPAN	3.999988 GHz	_____	4.000012 GHz	±1 Hz
10 MHz SPAN	3.99948 GHz	_____	4.00052 GHz	±1 Hz
20 MHz SPAN	3.99895 GHz	_____	4.00105 GHz	±1 Hz
50 MHz SPAN	3.99745 GHz	_____	4.00255 GHz	±1 Hz
100 MHz SPAN	3.9948 GHz	_____	4.0052 GHz	±1 Hz
1 GHz SPAN	3.950 GHz	_____	4.050 GHz	±1 Hz
Frequency Count Marker Accuracy:				
1.5 GHz CENTER FREQ	1.499999997 GHz	_____	1.500000003 GHz	±1 Hz
4.0 GHz CENTER FREQ	3.999999997 GHz	_____	4.000000003 GHz	±1 Hz
32. Pulse Digitization Uncertainty				
LOG 5dB/Div				
1 MHz RES BW		_____	1.25 dB	±0.15 dB
2 MHz RES BW		_____	3.0 dB	+0.43/–0.44 dB
LINEAR				
1 MHz RES BW		_____	4%	±0.31%
2 MHz RES BW		_____	12%	±0.65%
34. Second Harmonic Distortion (SHD)				
SHD (< 1.45 GHz)		_____	–72 dBc	+1.87/–2.28 dB
SHD (> 1.45 GHz)		_____	–79 dBc	+1.87/–2.28 dB

ManualsPlus.com

Table 12-15 Performance Test Record (15 of 20)

Agilent Technologies

Select model: 8561E ___ 8561EC ___ Report No. _____

Serial No. _____ Date _____

Test Description	Results			Measurement Uncertainty
	Minimum	Measured	Maximum	
37. Frequency Response				
Band 0, dc coupled				
Maximum Positive Response		_____	+1.75 dB	+0.32/–0.34 dB
Maximum Negative Response	–1.75 dB	_____		+0.32/–0.34 dB
Peak-to-Peak Response		_____	2.0 dB	+0.32/–0.34 dB
Band 1, dc coupled				
Maximum Positive Response		_____	+2.5 dB	+0.44/–0.49 dB
Maximum Negative Response	–2.5 dB	_____		+0.44/–0.49 dB
Peak-to-Peak Response		_____	3.0 dB	+0.44/–0.49 dB
Band 0, ac coupled				
Maximum Positive Response		_____	+1.9 dB	+0.45/–0.50 dB
Maximum Negative Response	–1.9 dB	_____		+0.45/–0.50 dB
Peak-to-Peak Response		_____	2.2 dB	+0.45/–0.50 dB
Band 1, ac coupled				
Maximum Positive Response		_____	+3.0 dB	+0.51/–0.58 dB
Maximum Negative Response	–3.0 dB	_____		+0.51/–0.58 dB
Peak-to-Peak Response		_____	4.0 dB	+0.51/–0.58 dB
Band Switching Uncertainty:				
dc coupled:				
Band 0 to Band 1		_____	3.5 dB	+0.76/–0.83 dB
Band 1 to Band 0		_____	3.5 dB	+0.77/–0.84 dB

ManualsPlus.com

Table 12-16 Performance Test Record (16 of 20)

Agilent Technologies

Select model: 8561E ___ 8561EC ___ Report No. _____

Serial No. _____ Date _____

Test Description	Results			Measurement Uncertainty
	Minimum	Measured	Maximum	
37. Frequency Response (continued)				
Band Switching Uncertainty: (cont')				
ac coupled:				
Band 0 to Band 1		_____	4.1 dB	+0.76/–0.83 dB
Band 1 to Band 0		_____	4.1 dB	+0.77/–0.84 dB
42. Frequency Span Accuracy				
1 kHz SPAN	–1 %	_____	+1 %	±0.24 %
2 kHz SPAN	–1 %	_____	+1 %	±0.24 %
5 kHz SPAN	–1 %	_____	+1 %	±0.24 %
10 kHz SPAN	–1 %	_____	+1 %	±0.24 %
20 kHz SPAN	–1 %	_____	+1 %	±0.24 %
50 kHz SPAN	–1 %	_____	+1 %	±0.24 %
100 kHz SPAN	–1 %	_____	+1 %	±0.24 %
200 kHz SPAN	–1 %	_____	+1 %	±0.24 %
500 kHz SPAN	–1 %	_____	+1 %	±0.24 %
1 MHz SPAN	–1 %	_____	+1 %	±0.24 %
2 MHz SPAN	–1 %	_____	+1 %	±0.24 %
5 MHz SPAN	–5 %	_____	+5 %	±0.24 %
10 MHz SPAN	–5 %	_____	+5 %	±0.24 %
20 MHz SPAN	–5 %	_____	+5 %	±0.24 %
50 MHz SPAN	–5 %	_____	+5 %	±0.24 %
100 MHz SPAN	–5 %	_____	+5 %	±0.24 %
200 MHz SPAN	–5 %	_____	+5 %	±0.24 %
500 MHz SPAN	–5 %	_____	+5 %	±0.24 %

ManualsPlus.com

Table 12-17 Performance Test Record (17 of 20)

Agilent Technologies

Select model: 8561E ___ 8561EC ___ Report No. _____

Serial No. _____ Date _____

Test Description	Results			Measurement Uncertainty
	Minimum	Measured	Maximum	
44. Third Order Intermodulation Distortion				
TOI Distortion, 45 MHz		_____	–78 dBc	+1.41/–1.43 dB
TOI Distortion, 5 GHz		_____	–90 dBc	+2.04/–2.12 dB
48. Gain Compression				
Gain Compression, 2 GHz		_____	1 dB	±0.19 dB
Gain Compression, 4 GHz		_____	1 dB	±0.22 dB
52. 1ST LO OUTPUT Amplitude				
Maximum 1ST LO OUTPUT AMPLITUDE		_____	+18.5 dBm	±0.18 dB
Minimum 1ST LO OUTPUT AMPLITUDE	+14.5 dBm	_____		±0.18 dB
53. Sweep Time Accuracy				
50 µs SWEEP TIME†	42.5 µs	_____	57.5 µs	±750 ns
100 µs SWEEP TIME†	85.0 µs	_____	115 µs	±1.5 µs
200 µs SWEEP TIME†	170 µs	_____	230 µs	±3.0 µs
500 µs SWEEP TIME†	425 µs	_____	575 µs	±7.5 µs
1 ms SWEEP TIME†	850 µs	_____	1.15 ms	±15 µs
2 ms SWEEP TIME†	1.70 ms	_____	2.30 ms	±30 µs
5 ms SWEEP TIME†	4.25 ms	_____	5.75 ms	±75 µs
10 ms SWEEP TIME†	8.50 ms	_____	11.5 ms	±150 µs
20 ms SWEEP TIME†	17.0 ms	_____	23.0 ms	±300 µs
30 ms SWEEP TIME	29.7 ms	_____	30.3 ms	±209 ns
50 ms SWEEP TIME	49.5 ms	_____	50.5 ms	±281 ns

† These entries apply only to E-Series spectrum analyzers without Option 007.

ManualsPlus.com

Table 12-18 Performance Test Record (18 of 20)

Agilent Technologies

Select model: 8561E ___ 8561EC ___ Report No. _____

Serial No. _____ Date _____

Test Description	Results			Measurement Uncertainty
	Minimum	Measured	Maximum	
53. Sweep Time Accuracy (continued)				
100 ms SWEEP TIME	99.0 ms	_____	101.0 ms	±461 ns
200 ms SWEEP TIME	198.0 ms	_____	202.0 ms	±821 ns
500 ms SWEEP TIME	495.0 ms	_____	505.0 ms	±1.901 µs
1 s SWEEP TIME	990.0 ms	_____	1.010 s	±3.7 µs
2 s SWEEP TIME	1.980 s	_____	2.020 s	±7.3 µs
5 s SWEEP TIME	4.950 s	_____	5.050 s	±18.1 µs
10 s SWEEP TIME	9.900 s	_____	10.10 s	±36.1 µs
20 s SWEEP TIME	19.80 s	_____	20.20 s	±72.1 µs
50 s SWEEP TIME	49.50 s	_____	50.50 s	±180.1 µs
100 s SWEEP TIME	99.00 s	_____	101.0 s	±360.1 µs
55. Residual Responses				
200 kHz to 2.9 GHz		_____	–90 dBm	+1.24/–1.37 dB
2.9 GHz to 6.5 GHz		_____	–90 dBm	+1.24/–1.37 dB
57. IF INPUT Amplitude Accuracy				
IF INPUT Amplitude	–31.5 dBm	_____	–28.5 dBm	+0.40/–0.44 dB
58. Gate Delay Accuracy and Gate Length Accuracy				
Serial prefix <3310A				
20 °C to 30 °C:				
MIN Gate Delay	1.9985 µs	_____	4.0015 µs	±21 ns
MAX Gate Delay	1.9985 µs	_____	4.0015 µs	±21 ns
1 µs Gate Length	799.5 ns	_____	1200.5 ns	±11 ns
65 ms Gate Length	64.967 ms	_____	65.033 ms	±752 ns

ManualsPlus.com

Table 12-19 Performance Test Record (19 of 20)

Agilent Technologies

Select model: 8561E/EC Report No. _____

Serial No. _____ Date _____

Test Description	Results			Measurement Uncertainty
	Minimum	Measured	Maximum	
58. Gate Delay Accuracy and Gate Length Accuracy (continued)				
Serial prefix <3310A (cont'd)				
–10 °C to 55 °C:				
MIN Gate Delay	1.9964 µs	_____	4.0036 µs	±21 ns
MAX Gate Delay	1.9964 µs	_____	4.0036 µs	±21 ns
1 µs Gate Length	798.8 ns	_____	1201.2 ns	±11 ns
65 ms Gate Length	64.922 ms	_____	65.078 ms	±752 ns
Serial prefix ≥3310A				
MIN Gate Delay	2.0000 µs	_____	4.0000 µs	±21 ns
MAX Gate Delay	2.0000 µs	_____	4.0000 µs	±21 ns
1 µs Gate Length	0.0000 ns	_____	2.0000 µs	±11 ns
65 ms Gate Length	64.999 ms	_____	65.001 ms	±752 ns
59. Delayed Sweep Accuracy				
Serial Prefix <3310A				
20 °C to 30 °C:				
1000 µs	998.5 µs	_____	1001.5 µs	±114 ns
2000 µs	1998 µs	_____	2002 µs	±124 ns
5000 µs	4996.5 µs	_____	5003.5 µs	±154 ns
10000 µs	9994 µs	_____	10006 µs	±204 ns
20000 µs	19989 µs	_____	20011 µs	±304 ns
50000 µs	49974 µs	_____	50026 µs	±604 ns
65000 µs	64966.5 µs	_____	65033.5 µs	±754 ns

ManualsPlus.com

Table 12-20 Performance Test Record (20 of 20)

Agilent Technologies

Select model: 8561E ___ 8561EC ___ Report No. _____

Serial No. _____ Date _____

Test Description	Results			Measurement Uncertainty
	Minimum	Measured	Maximum	
59. Delayed Sweep Accuracy (continued)				
Serial Prefix <3310A (cont'd)				
–10 °C to 55 °C:				
1000 µs	997.8 µs	_____	1002.2 µs	±114 ns
2000 µs	1996.6 µs	_____	2003.4 µs	±124 ns
5000 µs	4993 µs	_____	5007 µs	±154 ns
10000 µs	9987 µs	_____	10013 µs	±204 ns
20000 µs	19975 µs	_____	20025 µs	±304 ns
50000 µs	49939 µs	_____	50061 µs	±604 ns
65000 µs	64922 µs	_____	65078 µs	±754 ns
Serial Prefix ≥3310A				
1000 µs	999 µs	_____	1001 µs	±114 ns
2000 µs	1999 µs	_____	2001 µs	±124 ns
5000 µs	4999 µs	_____	5001 µs	±154 ns
10000 µs	9999 µs	_____	10001 µs	±204 ns
20000 µs	19999 µs	_____	20001 µs	±304 ns
50000 µs	49999 µs	_____	50001 µs	±604 ns
65000 µs	64999 µs	_____	65001 µs	±754 ns

ManualsPlus.com

ManualsPlus.com

13 8562E/EC Performance Test Record

ManualsPlus.com

Test Record

Table 13-1 8562E/EC Performance Test Record

Agilent Technologies
Address:
_____
_____

Report No. _____
Date _____
(e.g. 10 SEP 1989)

Select model: 8562E ___ 8562EC ___
Serial No. _____
Firmware Revision _____

Options _____

Customer _____

Tested by _____

Ambient temperature _____ °C
Relative humidity_____%
Power mains line frequency _____ Hz (nominal)

Test Equipment Used

Description	Model No.	Trace No.	Cal Due Date
Synthesized Sweeper #1			
Synthesized Sweeper #2			
Synthesized Signal Generator			
Synthesizer/Level Generator			
Frequency Standard			
Measuring Receiver			
RF Power Sensor			
Low-Power Power Sensor			
Microwave Power Sensor			
Pulse/Function Generator			
Microwave Frequency Counter			
Universal Frequency Counter			
Oscilloscope			
Amplifier			
Power Splitter			
1.8 GHz Low-Pass Filter			
4.4 GHz Low-Pass Filter			
50 MHz Low-Pass Filter			
50 Ω Termination			
20 dB Fixed Attenuator			
10 dB Fixed Attenuator			
10 dB Step Attenuator			
20 dB Step Attenuator			
DVM			
Function Generator			

Notes/Comments: _____
_____

ManualsPlus.com

Table 13-2 Performance Test Record (2 of 20)

Agilent Technologies

Select model: 8562E ___ 8562EC ___ Report No. _____

Serial No. _____ Date _____

Test Description	Results			Measurement Uncertainty
	Minimum	Measured	Maximum	
1. 10 MHz Reference Output Accuracy (Non-Option 103)				
5-minute Warm-up Error (0 °C to +55 °C)	-1×10^{-7}	_____	$+1 \times 10^{-7}$	$\pm 2.004 \times 10^{-9}$
5-minute Warm-up Error (–10 °C to 0 °C)	-1×10^{-6}	_____	$+1 \times 10^{-6}$	$\pm 2.004 \times 10^{-9}$
15-minute Warm-up Error	-1×10^{-8}	_____	$+1 \times 10^{-8}$	$\pm 2.003 \times 10^{-9}$
2. 10 MHz Reference Output Accuracy (Option 103)				
Calibrator Frequency	299.9988 MHz	_____	300.0012 MHz	±55.75 Hz
3. Fast Sweep Time Accuracy				
EC-Series and E-Series with Option 007	299.700 MHz	_____	300.300 MHz	±55.75 Hz
4. Calibrator Amplitude Accuracy				
Calibrator Amplitude	–10.30 dBm	_____	+9.70 dB	±0.12 dB
7. Displayed Average Noise Level				
Non-Option 103:				
30 Hz		_____	–90 dBm	+1.24/–1.37 dB
1 kHz		_____	–105 dBm	+1.24/–1.37 dB
10 kHz		_____	–120 dBm	+1.24/–1.37 dB
100 kHz		_____	–120 dBm	+1.24/–1.37 dB
1 MHz to 10 MHz		_____	–140 dBm	+1.24/–1.37 dB
10 MHz to 2.9 GHz		_____	–151 dBm	+1.24/–1.37 dB
2.9 GHz to 6.46 GHz		_____	–148 dBm	+1.24/–1.37 dB
6.46 GHz to 13.2 GHz		_____	–145 dBm	+1.24/–1.37 dB

ManualsPlus.com

Table 13-3 Performance Test Record (3 of 20)

Agilent Technologies

Select model: 8562E ___ 8562EC ___ Report No. _____

Serial No. _____ Date _____

Test Description	Results			Measurement Uncertainty
	Minimum	Measured	Maximum	
7. DANL (continued)				
Option 103:				
30 Hz		_____	–80 dBm	+1.24/–1.37 dB
1 kHz		_____	–95 dBm	+1.24/–1.37 dB
10 kHz		_____	–110 dBm	+1.24/–1.37 dB
100 kHz		_____	–110 dBm	+1.24/–1.37 dB
1 MHz to 10 MHz		_____	–130 dBm	+1.24/–1.37 dB
10 MHz to 2.9 GHz		_____	–141 dBm	+1.24/–1.37 dB
2.9 GHz to 6.46 GHz		_____	–138 dBm	+1.24/–1.37 dB
6.46 GHz to 13.2 GHz		_____	–135 dBm	+1.24/–1.37 dB
11. Resolution Bandwidth Switching and IF Alignment Uncertainty				
2 MHz RES BW	–0.5 dB	_____	+0.5 dB	±0.10 dB
1 MHz RES BW	–0.5 dB	_____	+0.5 dB	±0.10 dB
100 kHz RES BW	–0.5 dB	_____	+0.5 dB	±0.10 dB
30 kHz RES BW	–0.5 dB	_____	+0.5 dB	±0.10 dB
10 kHz RES BW	–0.5 dB	_____	+0.5 dB	±0.10 dB
3 kHz RES BW	–0.5 dB	_____	+0.5 dB	±0.10 dB
1 kHz RES BW	–0.5 dB	_____	+0.5 dB	±0.10 dB
300 Hz RES BW	–1.0 dB	_____	+1.0 dB	±0.10 dB
100 Hz RES BW	–0.5 dB	_____	+0.5 dB	±0.10 dB
30 Hz RES BW	–0.5 dB	_____	+0.5 dB	±0.10 dB
10 Hz RES BW	–0.5 dB	_____	+0.5 dB	±0.10 dB
3 Hz RES BW*	–0.5 dB	_____	+0.5 dB	±0.10 dB
1 Hz RES BW*	–0.5 dB	_____	+0.5 dB	±0.10 dB

* 3 Hz and 1 Hz RES BW not available with Option 103.

ManualsPlus.com

Table 13-4 Performance Test Record (4 of 20)

Agilent Technologies

Select model: 8562E ___ 8562EC ___ Report No. _____

Serial No. _____ Date _____

Test Description	Results			Measurement Uncertainty
	Minimum	Measured	Maximum	
12. Resolution Bandwidth Accuracy and Selectivity				
3 dB Bandwidth Accuracy				
2 MHz RES BW	–25%	_____	+50%	±1.33%
1 MHz RES BW	–25%	_____	+25%	±1.33%
300 kHz RES BW	–10%	_____	+10%	±1.33%
100 kHz RES BW	–10%	_____	+10%	±1.33%
30 kHz RES BW	–10%	_____	+10%	±1.33%
10 kHz RES BW	–10%	_____	+10%	±1.33%
3 kHz RES BW	–10%	_____	+10%	±1.33%
1 kHz RES BW	–10%	_____	+10%	±1.33%
300 Hz RES BW	–10%	_____	+10%	±1.33%
Selectivity				
2 MHz RES BW		_____	15:1	±2.8%
1 MHz RES BW		_____	15:1	±2.8%
300 kHz RES BW		_____	15:1	±2.8%
100 kHz RES BW		_____	15:1	±2.8%
30 kHz RES BW		_____	15:1	±2.8%
10 kHz RES BW		_____	15:1	±2.8%
3 kHz RES BW		_____	15:1	±2.8%
1 kHz RES BW		_____	15:1	±2.8%
300 Hz RES BW		_____	15:1	±2.8%
13. Input Attenuator Switching Uncertainty				
Cumulative, 50 MHz				
20 dB ATTEN	–0.6 dB	_____	+0.6 dB	±0.12 dB
30 dB ATTEN	–1.2 dB	_____	+1.2 dB	±0.12 dB
40 dB ATTEN	–1.8 dB	_____	+1.8 dB	±0.12 dB
50 dB ATTEN	–1.8 dB	_____	+1.8 dB	±0.14 dB

ManualsPlus.com

Table 13-5 Performance Test Record (5 of 20)

Agilent Technologies

Select model: 8562E ___ 8562EC ___ Report No. _____

Serial No. _____ Date _____

Test Description	Results			Measurement Uncertainty
	Minimum	Measured	Maximum	
13. Input Attenuator Switching Uncertainty (continued)				
Cumulative, 50 MHz (cont'd)				
60 dB ATTEN	–1.8 dB	_____	+1.8 dB	±0.14 dB
70 dB ATTEN	–1.8 dB	_____	+1.8 dB	±0.14 dB
Incremental, 50 MHz				
20 dB ATTEN	–0.6 dB	_____	+0.6 dB	±0.12 dB
30 dB ATTEN	–0.6 dB	_____	+0.6 dB	±0.12 dB
40 dB ATTEN	–0.6 dB	_____	+0.6 dB	±0.12 dB
50 dB ATTEN	–0.6 dB	_____	+0.6 dB	±0.14 dB
60 dB ATTEN	–0.6 dB	_____	+0.6 dB	±0.14 dB
70 dB ATTEN	–0.6 dB	_____	+0.6 dB	±0.14 dB
Cumulative, 2.9 GHz				
20 dB ATTEN	–0.6 dB	_____	+0.6 dB	±0.23 dB
30 dB ATTEN	–1.2 dB	_____	+1.2 dB	±0.23 dB
40 dB ATTEN	–1.8 dB	_____	+1.8 dB	±0.23 dB
50 dB ATTEN	–1.8 dB	_____	+1.8 dB	±0.23 dB
60 dB ATTEN	–1.8 dB	_____	+1.8 dB	+0.24/–0.25 dB
70 dB ATTEN	–1.8 dB	_____	+1.8 dB	+0.24/–0.25 dB
Incremental, 2.9 GHz				
20 dB ATTEN	–0.6 dB	_____	+0.6 dB	±0.23 dB
30 dB ATTEN	–0.6 dB	_____	+0.6 dB	±0.23 dB
40 dB ATTEN	–0.6 dB	_____	+0.6 dB	±0.23 dB
50 dB ATTEN	–0.6 dB	_____	+0.6 dB	±0.23 dB
60 dB ATTEN	–0.6 dB	_____	+0.6 dB	+0.24/–0.25 dB
70 dB ATTEN	–0.6 dB	_____	+0.6 dB	+0.24/–0.25 dB

ManualsPlus.com

Table 13-6 Performance Test Record (6 of 20)

Agilent Technologies

Select model: 8562E ___ 8562EC ___ Report No. _____

Serial No. _____ Date _____

Test Description	Results			Measurement Uncertainty
	Minimum	Measured	Maximum	
15. IF Gain Uncertainty				
LOG, 10 dB steps				
–10 dBm REF LVL	–1.0 dB	_____	+1.0 dB	±0.11 dB
–20 dBm REF LVL	–1.0 dB	_____	+1.0 dB	±0.11 dB
–30 dBm REF LVL	–1.0 dB	_____	+1.0 dB	±0.11 dB
–40 dBm REF LVL	–1.0 dB	_____	+1.0 dB	±0.11 dB
–50 dBm REF LVL	–1.0 dB	_____	+1.0 dB	±0.11 dB
–60 dBm REF LVL	–1.0 dB	_____	+1.0 dB	±0.12 dB
–70 dBm REF LVL	–1.0 dB	_____	+1.0 dB	±0.12 dB
–80 dBm REF LVL	–1.0 dB	_____	+1.0 dB	±0.12 dB
LOG, 1 dB steps				
–1 dBm REF LVL	–1.0 dB	_____	+1.0 dB	±0.11 dB
–2 dBm REF LVL	–1.0 dB	_____	+1.0 dB	±0.11 dB
–3 dBm REF LVL	–1.0 dB	_____	+1.0 dB	±0.11 dB
–4 dBm REF LVL	–1.0 dB	_____	+1.0 dB	±0.11 dB
–5 dBm REF LVL	–1.0 dB	_____	+1.0 dB	±0.11 dB
–6 dBm REF LVL	–1.0 dB	_____	+1.0 dB	±0.11 dB
–7 dBm REF LVL	–1.0 dB	_____	+1.0 dB	±0.11 dB
–8 dBm REF LVL	–1.0 dB	_____	+1.0 dB	±0.11 dB
–9 dBm REF LVL	–1.0 dB	_____	+1.0 dB	±0.11 dB
–10 dBm REF LVL	–1.0 dB	_____	+1.0 dB	±0.11 dB
–11 dBm REF LVL	–1.0 dB	_____	+1.0 dB	±0.11 dB
–12 dBm REF LVL	–1.0 dB	_____	+1.0 dB	±0.11 dB
LINEAR, 10 dB steps				
–10 dBm REF LVL	–1.0 dB	_____	+1.0 dB	±0.11 dB
–20 dBm REF LVL	–1.0 dB	_____	+1.0 dB	±0.11 dB
–30 dBm REF LVL	–1.0 dB	_____	+1.0 dB	±0.11 dB
–40 dBm REF LVL	–1.0 dB	_____	+1.0 dB	±0.11 dB

ManualsPlus.com

Table 13-7 Performance Test Record (7 of 20)

Agilent Technologies

Select model: 8562E ___ 8562EC ___ Report No. _____

Serial No. _____ Date _____

Test Description	Results			Measurement Uncertainty
	Minimum	Measured	Maximum	
15. IF Gain Uncertainty (continued)				
LINEAR, 10 dB steps (cont'd)				
–50 dBm REF LVL	–1.0 dB	_____	+1.0 dB	±0.11 dB
–60 dBm REF LVL	–1.0 dB	_____	+1.0 dB	±0.12 dB
–70 dBm REF LVL	–1.0 dB	_____	+1.0 dB	±0.12 dB
–80 dBm REF LVL	–1.0 dB	_____	+1.0 dB	±0.12 dB
16. Scale Fidelity				
Cumulative, 10 dB/Div,				
RES BW ≥300 Hz				
–6 dB from REF LVL	–0.60 dB	_____	+0.60 dB	±0.24 dB
–12 dB from REF LVL	–0.85 dB	_____	+0.85 dB	±0.24 dB
–18 dB from REF LVL	–0.85 dB	_____	+0.85 dB	±0.24 dB
–24 dB from REF LVL	–0.85 dB	_____	+0.85 dB	±0.24 dB
–30 dB from REF LVL	–0.85 dB	_____	+0.85 dB	±0.24 dB
–36 dB from REF LVL	–0.85 dB	_____	+0.85 dB	±0.24 dB
–42 dB from REF LVL	–0.85 dB	_____	+0.85 dB	±0.24 dB
–48 dB from REF LVL	–0.85 dB	_____	+0.85 dB	±0.24 dB
–54 dB from REF LVL	–0.85 dB	_____	+0.85 dB	±0.24 dB
–60 dB from REF LVL	–0.85 dB	_____	+0.85 dB	+0.25/–0.26 dB
–66 dB from REF LVL	–0.85 dB	_____	+0.85 dB	+0.25/–0.26 dB
–72 dB from REF LVL	–0.85 dB	_____	+0.85 dB	+0.25/–0.26 dB
–78 dB from REF LVL	–0.85 dB	_____	+0.85 dB	+0.25/–0.26 dB
–84 dB from REF LVL	–0.85 dB	_____	+0.85 dB	+0.25/–0.26 dB
–90 dB from REF LVL	–0.85 dB	_____	+0.85 dB	+0.25/–0.26 dB

ManualsPlus.com

Table 13-8 Performance Test Record (8 of 20)

Agilent Technologies

Select model: 8562E ___ 8562EC ___ Report No. _____

Serial No. _____ Date _____

Test Description	Results			Measurement Uncertainty
	Minimum	Measured	Maximum	
16. Scale Fidelity (continued)				
Incremental, 10 dB/Div,				
RES BW ≥300 Hz				
–12 dB from REF LVL	–0.10 dB	_____	+0.10 dB	±0.04 dB
–18 dB from REF LVL	–0.10 dB	_____	+0.10 dB	±0.04 dB
–24 dB from REF LVL	–0.10 dB	_____	+0.10 dB	±0.04 dB
–30 dB from REF LVL	–0.10 dB	_____	+0.10 dB	±0.04 dB
–36 dB from REF LVL	–0.10 dB	_____	+0.10 dB	±0.04 dB
–42 dB from REF LVL	–0.10 dB	_____	+0.10 dB	±0.04 dB
–48 dB from REF LVL	–0.10 dB	_____	+0.10 dB	±0.04 dB
–54 dB from REF LVL	–0.10 dB	_____	+0.10 dB	±0.04 dB
–60 dB from REF LVL	–0.10 dB	_____	+0.10 dB	±0.04 dB
–66 dB from REF LVL	–0.10 dB	_____	+0.10 dB	±0.04 dB
–72 dB from REF LVL	–0.10 dB	_____	+0.10 dB	±0.05 dB
–78 dB from REF LVL	–0.10 dB	_____	+0.10 dB	±0.05 dB
–84 dB from REF LVL	–0.10 dB	_____	+0.10 dB	±0.05 dB
–90 dB from REF LVL	–0.10 dB	_____	+0.10 dB	±0.05 dB
Cumulative, 10 dB/Div,				
RES BW ≤100 Hz				
–6 dB from REF LVL	–0.60 dB	_____	+0.60 dB	±0.24 dB
–12 dB from REF LVL	–0.85 dB	_____	+0.85 dB	±0.24 dB
–18 dB from REF LVL	–0.85 dB	_____	+0.85 dB	±0.24 dB
–24 dB from REF LVL	–0.85 dB	_____	+0.85 dB	±0.24 dB
–30 dB from REF LVL	–0.85 dB	_____	+0.85 dB	±0.24 dB
–36 dB from REF LVL	–0.85 dB	_____	+0.85 dB	±0.24 dB
–42 dB from REF LVL	–0.85 dB	_____	+0.85 dB	±0.24 dB
–48 dB from REF LVL	–0.85 dB	_____	+0.85 dB	±0.24 dB
–54 dB from REF LVL	–0.85 dB	_____	+0.85 dB	±0.24 dB

ManualsPlus.com

Table 13-9 Performance Test Record (9 of 20)

Agilent Technologies

Select model: 8562E ___ 8562EC ___ Report No. _____

Serial No. _____ Date _____

Test Description	Results			Measurement Uncertainty
	Minimum	Measured	Maximum	
16. Scale Fidelity (continued)				
Cumulative, 10 dB/Div,				
RES BW ≤100 Hz (cont'd)				
–60 dB from REF LVL	–0.85 dB	_____	+0.85 dB	+0.25/–0.26 dB
–66 dB from REF LVL	–0.85 dB	_____	+0.85 dB	+0.25/–0.26 dB
–72 dB from REF LVL	–0.85 dB	_____	+0.85 dB	+0.25/–0.26 dB
–78 dB from REF LVL	–0.85 dB	_____	+0.85 dB	+0.25/–0.26 dB
–84 dB from REF LVL	–0.85 dB	_____	+0.85 dB	+0.25/–0.26 dB
–90 dB from REF LVL	–0.85 dB	_____	+0.85 dB	+0.25/–0.26 dB
–94 dB from REF LVL	–1.50 dB	_____	+1.50 dB	+0.25/–0.26 dB
–98 dB from REF LVL	–1.50 dB	_____	+1.50 dB	+0.25/–0.26 dB
Incremental, 10 dB/Div,				
RES BW ≤100 Hz				
–12 dB from REF LVL	–0.20 dB	_____	+0.20 dB	±0.04 dB
–18 dB from REF LVL	–0.20 dB	_____	+0.20 dB	±0.04 dB
–24 dB from REF LVL	–0.20 dB	_____	+0.20 dB	±0.04 dB
–30 dB from REF LVL	–0.20 dB	_____	+0.20 dB	±0.04 dB
–36 dB from REF LVL	–0.20 dB	_____	+0.20 dB	±0.04 dB
–42 dB from REF LVL	–0.20 dB	_____	+0.20 dB	±0.04 dB
–48 dB from REF LVL	–0.20 dB	_____	+0.20 dB	±0.04 dB
–54 dB from REF LVL	–0.20 dB	_____	+0.20 dB	±0.04 dB
–60 dB from REF LVL	–0.20 dB	_____	+0.20 dB	±0.04 dB
–66 dB from REF LVL	–0.20 dB	_____	+0.20 dB	±0.04 dB
–72 dB from REF LVL	–0.20 dB	_____	+0.20 dB	±0.05 dB
–78 dB from REF LVL	–0.20 dB	_____	+0.20 dB	±0.05 dB
–84 dB from REF LVL	–0.20 dB	_____	+0.20 dB	±0.05 dB
–90 dB from REF LVL	–0.20 dB	_____	+0.20 dB	±0.05 dB

ManualsPlus.com

Table 13-10 Performance Test Record (10 of 20)

Agilent Technologies

Select model: 8562E ___ 8562EC ___ Report No. _____

Serial No. _____ Date _____

Test Description	Results			Measurement Uncertainty
	Minimum	Measured	Maximum	
16. Scale Fidelity (continued)				
Cumulative, 2 dB/Div				
–2 dB from REF LVL	–0.20 dB	_____	+0.20 dB	±0.053 dB
–4 dB from REF LVL	–0.40 dB	_____	+0.40 dB	±0.053 dB
–6 dB from REF LVL	–0.60 dB	_____	+0.60 dB	±0.053 dB
–8 dB from REF LVL	–0.80 dB	_____	+0.80 dB	±0.053 dB
–10 dB from REF LVL	–0.85 dB	_____	+0.85 dB	±0.053 dB
–12 dB from REF LVL	–0.85 dB	_____	+0.85 dB	±0.053 dB
–14 dB from REF LVL	–0.85 dB	_____	+0.85 dB	±0.053 dB
–16 dB from REF LVL	–0.85 dB	_____	+0.85 dB	±0.053 dB
–18 dB from REF LVL	–0.85 dB	_____	+0.85 dB	±0.053 dB
Incremental, 2 dB/Div				
–2 dB from REF LVL	–0.10 dB	_____	+0.10 dB	±0.04 dB
–4 dB from REF LVL	–0.10 dB	_____	+0.10 dB	±0.04 dB
–6 dB from REF LVL	–0.10 dB	_____	+0.10 dB	±0.04 dB
–8 dB from REF LVL	–0.10 dB	_____	+0.10 dB	±0.04 dB
–10 dB from REF LVL	–0.10 dB	_____	+0.10 dB	±0.04 dB
–12 dB from REF LVL	–0.10 dB	_____	+0.10 dB	±0.04 dB
–14 dB from REF LVL	–0.10 dB	_____	+0.10 dB	±0.04 dB
–16 dB from REF LVL	–0.10 dB	_____	+0.10 dB	±0.04 dB
–18 dB from REF LVL	–0.10 dB	_____	+0.10 dB	±0.04 dB
Linear				
–2 dB from REF LVL	–2.33 dB	_____	–1.68 dB	±0.04 dB
–4 dB from REF LVL	–4.42 dB	_____	–3.60 dB	±0.04 dB
–6 dB from REF LVL	–6.54 dB	_____	–5.50 dB	±0.04 dB
–8 dB from REF LVL	–8.68 dB	_____	–7.37 dB	±0.04 dB
–10 dB from REF LVL	–10.87 dB	_____	–9.21 dB	±0.04 dB
–12 dB from REF LVL	–13.10 dB	_____	–11.02 dB	±0.04 dB

ManualsPlus.com

Table 13-11 Performance Test Record (11 of 20)

Agilent Technologies

Select model: 8562E ___ 8562EC ___ Report No. _____

Serial No. _____ Date _____

Test Description	Results			Measurement Uncertainty
	Minimum	Measured	Maximum	
16. Scale Fidelity (continued)				
Cumulative, 2 dB/Div (cont'd)				
–14 dB from REF LVL	–15.42 dB	_____	–12.78 dB	±0.033 dB
–16 dB from REF LVL	–17.82 dB	_____	–14.49 dB	±0.033 dB
–18 dB from REF LVL	–20.36 dB	_____	–16.14 dB	±0.033 dB
17. Residual FM				
Non-Option 103		_____	1 Hz	±0.2 Hz
Option 103		_____	10 Hz	±0.8 Hz
19. Noise Sidebands				
Non-Option 103				
+100 Hz offset		_____	–88 dBc/Hz	+1.22/–1.34 dB
–100 Hz offset		_____	–88 dBc/Hz	+1.22/–1.34 dB
+1 kHz offset		_____	–97 dBc/Hz	+1.22/–1.34 dB
–1 kHz offset		_____	–97 dBc/Hz	+1.22/–1.34 dB
+10 kHz offset		_____	–113 dBc/Hz	+1.22/–1.34 dB
–10 kHz offset		_____	–113 dBc/Hz	+1.22/–1.34 dB
+30 kHz offset		_____	–113 dBc/Hz	+1.22/–1.34 dB
–30 kHz offset		_____	–113 dBc/Hz	+1.22/–1.34 dB
+100 kHz offset		_____	–117 dBc/Hz	+1.22/–1.34 dB
–100 kHz offset		_____	–117 dBc/Hz	+1.22/–1.34 dB
–1 kHz offset		_____	–97 dBc/Hz	+1.22/–1.34 dB
+10 kHz offset		_____	–113 dBc/Hz	+1.22/–1.34 dB
–10 kHz offset		_____	–113 dBc/Hz	+1.22/–1.34 dB
+30 kHz offset		_____	–113 dBc/Hz	+1.22/–1.34 dB
–30 kHz offset		_____	–113 dBc/Hz	+1.22/–1.34 dB

ManualsPlus.com

Table 13-12 Performance Test Record (12 of 20)

Agilent Technologies

Select model: 8562E ___ 8562EC ___ Report No. _____

Serial No. _____ Date _____

Test Description	Results			Measurement Uncertainty
	Minimum	Measured	Maximum	
19. Noise Sidebands (continued)				
Option 103				
+100 Hz offset		_____	–70 dBc/Hz	+1.22/–1.34 dB
–100 Hz offset		_____	–70 dBc/Hz	+1.22/–1.34 dB
+1 kHz offset		_____	–90 dBc/Hz	+1.22/–1.34 dB
–1 kHz offset		_____	–90 dBc/Hz	+1.22/–1.34 dB
+10 kHz offset		_____	–113 dBc/Hz	+1.22/–1.34 dB
–10 kHz offset		_____	–113 dBc/Hz	+1.22/–1.34 dB
+30 kHz offset		_____	–113 dBc/Hz	+1.22/–1.34 dB
–30 kHz offset		_____	–113 dBc/Hz	+1.22/–1.34 dB
+100 kHz offset		_____	–117 dBc/Hz	+1.22/–1.34 dB
–100 kHz offset		_____	–117 dBc/Hz	+1.22/–1.34 dB
22. Image, Multiple, and Out-of-Range Responses				
2 GHz CENTER FREQ				
2021.4 MHz		_____	–80 dBc	+0.8/–1.0 dB
2621.4 MHz		_____	–80 dBc	+0.8/–1.0 dB
2321.4 MHz		_____	–80 dBc	+0.8/–1.0 dB
2600.0 MHz		_____	–80 dBc	+0.8/–1.0 dB
7910.7 MHz		_____	–80 dBc	+0.8/–1.0 dB
9821.4 MHz		_____	–80 dBc	+0.8/–1.0 dB
4 GHz CENTER FREQ				
4021.4 MHz		_____	–80 dBc	+0.8/–1.0 dB
4621.4 MHz		_____	–80 dBc	+0.8/–1.0 dB
4321.4 MHz		_____	–80 dBc	+0.8/–1.0 dB
4600.0 MHz		_____	–80 dBc	+0.8/–1.0 dB
8310.7 MHz		_____	–80 dBc	+0.8/–1.0 dB
8932.1 MHz		_____	–80 dBc	+0.8/–1.0 dB

ManualsPlus.com

Table 13-13 Performance Test Record (13 of 20)

Agilent Technologies

Select model: 8562E ___ 8562EC ___ Report No. _____

Serial No. _____ Date _____

Test Description	Results			Measurement Uncertainty
	Minimum	Measured	Maximum	
22. Image, Multiple, and Out-of-Range Responses (continued)				
9 GHz CENTER FREQ				
9021.4 MHz		_____	–80 dBc	+0.8/–1.0 dB
9621.4 MHz		_____	–80 dBc	+0.8/–1.0 dB
9321.4 MHz		_____	–80 dBc	+0.8/–1.0 dB
9600.0 MHz		_____	–80 dBc	+0.8/–1.0 dB
4344.65 MHz		_____	–80 dBc	+0.8/–1.0 dB
4966.05 MHz		_____	–80 dBc	+0.8/–1.0 dB
28. Frequency Readout Accuracy and Frequency Count Marker Accuracy				
Frequency Readout Accuracy:				
1.5 GHz CENTER FREQ				
1 MHz SPAN	1.499988 GHz	_____	1.500012 GHz	±1 Hz
10 MHz SPAN	1.49948 GHz	_____	1.50052 GHz	±1 Hz
20 MHz SPAN	1.49895 GHz	_____	1.50105 GHz	±1 Hz
50 MHz SPAN	1.49745 GHz	_____	1.50255 GHz	±1 Hz
100 MHz SPAN	1.4948 GHz	_____	1.5052 GHz	±1 Hz
1 GHz SPAN	1.450 GHz	_____	1.550 GHz	±1 Hz
4.0 GHz CENTER FREQ				
1 MHz SPAN	3.999988 GHz	_____	4.000012 GHz	±1 Hz
10 MHz SPAN	3.99948 GHz	_____	4.00052 GHz	±1 Hz
20 MHz SPAN	3.99895 GHz	_____	4.00105 GHz	±1 Hz
50 MHz SPAN	3.99745 GHz	_____	4.00255 GHz	±1 Hz
100 MHz SPAN	3.9948 GHz	_____	4.0052 GHz	±1 Hz
1 GHz SPAN	3.950 GHz	_____	4.050 GHz	±1 Hz

ManualsPlus.com

Table 13-14 Performance Test Record (14 of 20)

Agilent Technologies

Select model: 8562E ___ 8562EC ___ Report No. _____

Serial No. _____ Date _____

Test Description	Results			Measurement Uncertainty
	Minimum	Measured	Maximum	
28. Frequency Readout Accuracy and Frequency Count Marker Accuracy (continued)				
Frequency Readout Accuracy: (cont'd)				
9.0 GHz CENTER FREQ				
1 MHz SPAN	8.999988GHz	_____	9.000012GHz	±2 Hz
10 MHz SPAN	8.99948 GHz	_____	9.00052 GHz	±2 Hz
20 MHz SPAN	8.99895 GHz	_____	9.00105 GHz	±2 Hz
50 MHz SPAN	8.99745 GHz	_____	9.00255 GHz	±2 Hz
100 MHz SPAN	8.9948 GHz	_____	9.0052 GHz	±2 Hz
1 GHz SPAN	8.950 GHz	_____	9.050 GHz	±2 Hz
Frequency Count Marker Accuracy:				
1.5 GHz CENTER FREQ	1.499999997 GHz	_____	1.500000003 GHz	±1 Hz
4.0 GHz CENTER FREQ	3.999999997 GHz	_____	4.000000003 GHz	±1 Hz
9.0 GHz CENTER FREQ	8.999999995 GHz	_____	9.000000005 GHz	±2 Hz
32. Pulse Digitization Uncertainty				
LOG 5dB/Div				
1 MHz RES BW		_____	1.25 dB	±0.15 dB
2 MHz RES BW		_____	3.0 dB	+0.43/–0.44 dB
LINEAR				
1 MHz RES BW		_____	4%	±0.31%
2 MHz RES BW		_____	12%	±0.65%

ManualsPlus.com

Table 13-15 Performance Test Record (15 of 20)

Agilent Technologies

Select model: 8562E ___ 8562EC ___ Report No. _____

Serial No. _____ Date _____

Test Description	Results			Measurement Uncertainty
	Minimum	Measured	Maximum	
35. Second Harmonic Distortion (SHD)				
SHD (< 1.45 GHz)		_____	–79 dBc	+1.87/–2.28 dB
SHD (1.5 GHz)		_____	–85 dBc	+2.32/–2.66 dB
SHD (> 2.0 GHz)		_____	–100 dBc	+2.32/–2.66 dB
38. Frequency Response				
Band 0, dc coupled				
Maximum Positive Response		_____	–1.80 dB	+0.32/–0.34 dB
Maximum Negative Response	+1.80 dB	_____		+0.32/–0.34 dB
Peak-to-Peak Response		_____	2.5 dB	+0.32/–0.34 dB
Band 1, dc coupled				
Maximum Positive Response		_____	+2.5 dB	+0.44/–0.49 dB
Maximum Negative Response	–2.5 dB	_____		+0.44/–0.49 dB
Peak-to-Peak Response		_____	3.0 dB	+0.44/–0.49 dB
Band 2, dc coupled				
Maximum Positive Response		_____	+2.9 dB	+0.45/–0.50 dB
Maximum Negative Response	–2.9 dB	_____		+0.45/–0.50 dB
Peak-to-Peak Response		_____	4.4 dB	+0.45/–0.50 dB
Band 0, ac coupled				
Maximum Positive Response		_____	+1.9 dB	+0.32/–0.34 dB
Maximum Negative Response	–1.9 dB	_____		+0.32/–0.34 dB
Peak-to-Peak Response		_____	2.5 dB	+0.32/–0.34 dB

ManualsPlus.com

Table 13-16 Performance Test Record (16 of 20)

Agilent Technologies

Select model: 8562E ___ 8562EC ___ Report No. _____

Serial No. _____ Date _____

Test Description	Results			Measurement Uncertainty
	Minimum	Measured	Maximum	
38. Frequency Response (continued)				
Band 1, ac coupled				
Maximum Positive Response		_____	+3.0 dB	+0.44/–0.49 dB
Maximum Negative Response	–3.0 dB	_____		+0.44/–0.49 dB
Peak-to-Peak Response		_____	4.0 dB	+0.44/–0.49 dB
Band 2, ac coupled				
Maximum Positive Response		_____	+3.0 dB	+0.45/–0.50 dB
Maximum Negative Response	–3.0 dB	_____		+0.45/–0.50 dB
Peak-to-Peak Response		_____	4.4 dB	+0.45/–0.50 dB
Band 0, dc coupled, 100 MHz to 2.3 GHz				
Peak-to-Peak Response		_____	1.8 dB	+0.32/–0.34 dB
Band Switching Uncertainty:				
dc coupled				
Band 0 to Band 1		_____	3.75 dB	+0.76/–0.83 dB
Band 0 to Band 2		_____	4.45 dB	+0.77/–0.84 dB
Band 1 to Band 2		_____	4.7 dB	+0.89/–0.99 dB
ac coupled				
Band 0 to Band 1		_____	4.25 dB	+0.76/–0.83 dB
Band 0 to Band 2		_____	4.45 dB	+0.77/–0.84 dB
Band 1 to Band 2		_____	5.2 dB	+0.89/–0.99 dB

ManualsPlus.com

Table 13-17 Performance Test Record (17 of 20)

Agilent Technologies

Select model: 8562E ___ 8562EC ___ Report No. _____

Serial No. _____ Date _____

Test Description	Results			Measurement Uncertainty
	Minimum	Measured	Maximum	
42. Frequency Span Accuracy				
1 kHz SPAN	–1 %	_____	+1 %	±0.24 %
2 kHz SPAN	–1 %	_____	+1 %	±0.24 %
5 kHz SPAN	–1 %	_____	+1 %	±0.24 %
10 kHz SPAN	–1 %	_____	+1 %	±0.24 %
20 kHz SPAN	–1 %	_____	+1 %	±0.24 %
50 kHz SPAN	–1 %	_____	+1 %	±0.24 %
100 kHz SPAN	–1 %	_____	+1 %	±0.24 %
200 kHz SPAN	–1 %	_____	+1 %	±0.24 %
500 kHz SPAN	–1 %	_____	+1 %	±0.24 %
1 MHz SPAN	–1 %	_____	+1 %	±0.24 %
2 MHz SPAN	–1 %	_____	+1 %	±0.24 %
5 MHz SPAN	–5 %	_____	+5 %	±0.24 %
10 MHz SPAN	–5 %	_____	+5 %	±0.24 %
20 MHz SPAN	–5 %	_____	+5 %	±0.24 %
50 MHz SPAN	–5 %	_____	+5 %	±0.24 %
100 MHz SPAN	–5 %	_____	+5 %	±0.24 %
200 MHz SPAN	–5 %	_____	+5 %	±0.24 %
500 MHz SPAN	–5 %	_____	+5 %	±0.24 %
45. Third Order Intermodulation Distortion				
TOI Distortion, 45 MHz		_____	–82 dBc	+1.41/–1.43 dB
TOI Distortion, 5 GHz		_____	–90 dBc	+2.04/–2.12 dB
TOI Distortion, 8 GHz		_____	–75 dBc	+2.04/–2.12 dB
49. Gain Compression				
Gain Compression, 2 GHz		_____	1 dB	±0.19 dB
Gain Compression, 4 GHz		_____	1 dB	±0.22 dB
Gain Compression, 7 GHz		_____	1 dB	±0.22 dB

ManualsPlus.com

Table 13-18 Performance Test Record (18 of 20)

Agilent Technologies

Select model: 8562E ___ 8562EC ___ Report No. _____

Serial No. _____ Date _____

Test Description	Results			Measurement Uncertainty
	Minimum	Measured	Maximum	
52. 1ST LO OUTPUT Amplitude				
Maximum 1ST LO OUTPUT				
AMPLITUDE		_____	+18.5 dBm	±0.18 dB
Minimum 1ST LO OUTPUT				
AMPLITUDE	+14.5 dBm	_____		±0.18 dB
53. Sweep Time Accuracy				
50 µs SWEEP TIME†	42.5 µs	_____	57.5 µs	±750 ns
100 µs SWEEP TIME†	85.0 µs	_____	115 µs	±1.5 µs
200 µs SWEEP TIME†	170 µs	_____	230 µs	±3.0 µs
500 µs SWEEP TIME†	425 µs	_____	575 µs	±7.5 µs
1 ms SWEEP TIME†	850 µs	_____	1.15 ms	±15 µs
2 ms SWEEP TIME†	1.70 ms	_____	2.30 ms	±30 µs
5 ms SWEEP TIME†	4.25 ms	_____	5.75 ms	±75 µs
10 ms SWEEP TIME†	8.50 ms	_____	11.5 ms	±150 µs
20 ms SWEEP TIME†	17.0 ms	_____	23.0 ms	±300 µs
30 ms SWEEP TIME	29.7 ms	_____	30.3 ms	±209 ns
50 ms SWEEP TIME	49.5 ms	_____	50.5 ms	±281 ns
100 ms SWEEP TIME	99.0 ms	_____	101.0 ms	±461 ns
200 ms SWEEP TIME	198.0 ms	_____	202.0 ms	±821 ns

† These entries apply only to E-Series spectrum analyzers without Option 007.

ManualsPlus.com

Table 13-19 Performance Test Record (19 of 20)

Agilent Technologies

Select model: 8562E ___ 8562EC ___ Report No. _____

Serial No. _____ Date _____

Test Description	Results			Measurement Uncertainty
	Minimum	Measured	Maximum	
53. Sweep Time Accuracy (continued)				
500 ms SWEEP TIME	495.0 ms	_____	505.0 ms	±1.901 µs
1 s SWEEP TIME	990.0 ms	_____	1.010 s	±3.7 µs
2 s SWEEP TIME	1.980 s	_____	2.020 s	±7.3 µs
5 s SWEEP TIME	4.950 s	_____	5.050 s	±18.1 µs
10 s SWEEP TIME	9.900 s	_____	10.10 s	±36.1 µs
20 s SWEEP TIME	19.80 s	_____	20.20 s	±72.1 µs
50 s SWEEP TIME	49.50 s	_____	50.50 s	±180.1 µs
100 s SWEEP TIME	99.00 s	_____	101.0 s	±360.1 µs
56. Residual Responses				
200 kHz to 2.9 GHz		_____	–90 dBm	+1.24/–1.37 dB
2.9 GHz to 6.5 GHz		_____	–90 dBm	+1.24/–1.37 dB
57. IF INPUT Amplitude Accuracy (Non-Option 327 only)				
IF INPUT Amplitude	–31.5 dBm	_____	–28.5 dBm	+0.40/–0.44 dB
58. Gate Delay Accuracy and Gate Length Accuracy				
MIN Gate Delay	2.0000 µs	_____	4.0000 µs	±21 ns
MAX Gate Delay	2.0000 µs	_____	4.0000 µs	±21 ns
1 µs Gate Length	0.0000 ns	_____	2.0000 µs	±11 ns
65 ms Gate Length	64.999 ms	_____	65.001 ms	±752 ns

ManualsPlus.com

Table 13-20 Performance Test Record (20 of 20)

Agilent Technologies

Select model: 8562E ___ 8562EC ___ Report No. _____

Serial No. _____ Date _____

Test Description	Results			Measurement Uncertainty
	Minimum	Measured	Maximum	
59. Delayed Sweep Accuracy				
1000 µs	999 µs	_____	1001 µs	±114 ns
2000 µs	1999 µs	_____	2001 µs	±124 ns
5000 µs	4999 µs	_____	5001 µs	±154 ns
10000 µs	9999 µs	_____	10001 µs	±204 ns
20000 µs	19999 µs	_____	20001 µs	±304 ns
50000 µs	49999 µs	_____	50001 µs	±604 ns
65000 µs	64999 µs	_____	65001 µs	±754 ns

ManualsPlus.com

ManualsPlus.com

14 8563E/EC Performance Test Record

ManualsPlus.com

Test Record

Table 14-1 8563E/EC Performance Test Record

Agilent Technologies
Address:
_____
_____

Report No. _____
Date _____
(e.g. 10 SEP 1989)

Select model: 8563E ___ 8563EC___
Serial No. _____
Firmware Revision _____
Customer _____
Ambient temperature _____ °C
Power mains line frequency _____ Hz (nominal)

Options _____
Tested by _____
Relative humidity_____%

Test Equipment Used

Description	Model No.	Trace No.	Cal Due Date
Synthesized Sweeper #1			
Synthesized Sweeper #2			
Synthesized Signal Generator			
Synthesizer/Level Generator			
Frequency Standard			
Measuring Receiver			
RF Power Sensor			
Low-Power Power Sensor			
Microwave Power Sensor			
Pulse/Function Generator			
Microwave Frequency Counter			
Universal Frequency Counter			
Oscilloscope			
Amplifier			
Power Splitter			
1.8 GHz Low-Pass Filter			
4.4 GHz Low-Pass Filter			
50 MHz Low-Pass Filter			
50 Ω Termination			
20 dB Fixed Attenuator			
10 dB Fixed Attenuator			
1 dB Step Attenuator			
10 dB Step Attenuator			
DVM			
Function Generator			

Notes/Comments: _____
_____
_____

ManualsPlus.com

Table 14-2 Performance Test Record (2 of 23)

Agilent Technologies

Select model: 8563E ___ 8563EC___ Report No. _____

Serial No. _____ Date _____

Test Description	Results			Measurement Uncertainty
	Minimum	Measured	Maximum	
1. 10 MHz Reference Output Accuracy (Non-Option 103)				
5-minute Warm-up Error (0 °C to +55 °C)	-1×10^{-7}	_____	$+1 \times 10^{-7}$	$\pm 2.004 \times 10^{-9}$
5-minute Warm-up Error (–10 °C to 0 °C)	-1×10^{-6}	_____	$+1 \times 10^{-6}$	$\pm 2.004 \times 10^{-9}$
15-minute Warm-up Error	-1×10^{-8}	_____	$+1 \times 10^{-8}$	$\pm 2.003 \times 10^{-9}$
2. 10 MHz Reference Output Accuracy (Option 103)				
Calibrator Frequency	299.9988 MHz	_____	300.0012 MHz	±55.75 Hz
3. Fast Sweep Time Accuracy (EC-Series and E-Series with Option 007)	299.700 MHz	_____	300.300 MHz	±55.75 Hz
4. Calibrator Amplitude Accuracy				
Calibrator Amplitude	–10.30 dBm	_____	+9.70 dB	±0.12 dB
8. Displayed Average Noise Level				
Non-Option 103:				
30 Hz (Option 006)		_____	–90 dBm	+1.24/–1.37 dB
1 kHz (Option 006)		_____	–105 dBm	+1.24/–1.37 dB
10 kHz		_____	–120 dBm	+1.24/–1.37 dB
100 kHz		_____	–120 dBm	+1.24/–1.37 dB
1 MHz to 10 MHz		_____	–140 dBm	+1.24/–1.37 dB
10 MHz to 2.9 GHz				
serial prefix <3246A		_____	–145 dBm	+1.24/–1.37 dB
serial prefix 3246A to <3645A		_____	–144 dBm	+1.24/–1.37 dB
serial prefix ≥3645A		_____	–149 dBm	+1.24/–1.37 dB

ManualsPlus.com

Test Description	Results			Measurement Uncertainty
	Minimum	Measured	Maximum	
Option H13		_____	–149 dBm	+1.24/–1.37 dB

ManualsPlus.com

Test Description	Results			Measurement Uncertainty
	Minimum	Measured	Maximum	
8. DANL (continued)				
Non-Option 103: (cont'd)				
2.9 GHz to 6.46 GHz		_____	–148 dBm	+1.24/–1.37 dB
6.46 GHz to 13.2 GHz		_____	–145 dBm	+1.24/–1.37 dB
13.2 GHz to 22.0 GHz		_____	–140 dBm	+1.24/–1.37 dB
22.0 GHz to 26.5 GHz		_____	–139 dBm	+1.24/–1.37 dB
Option 103:				
30 Hz (Option 006)		_____	–80 dBm	+1.24/–1.37 dB
1 kHz (Option 006)		_____	–95 dBm	+1.24/–1.37 dB
10 kHz		_____	–110 dBm	+1.24/–1.37 dB
100 kHz		_____	–110 dBm	+1.24/–1.37 dB
1 MHz to 10 MHz		_____	–130 dBm	+1.24/–1.37 dB
10 MHz to 2.9 GHz				
serial prefix <3246A		_____	–135 dBm	+1.24/–1.37 dB
serial prefix 3246A to <3645A		_____	–134 dBm	+1.24/–1.37 dB
serial prefix ≥3645A		_____	–139 dBm	+1.24/–1.37 dB
Option H13		_____	–139 dBm	+1.24/–1.37 dB
2.9 GHz to 6.46 GHz		_____	–138 dBm	+1.24/–1.37 dB
6.46 GHz to 13.2 GHz		_____	–135 dBm	+1.24/–1.37 dB
13.2 GHz to 22.0 GHz		_____	–130 dBm	+1.24/–1.37 dB
22.0 GHz to 26.5 GHz		_____	–129 dBm	+1.24/–1.37 dB
11. Resolution Bandwidth Switching and IF Alignment Uncertainty				
2 MHz RES BW	–0.5 dB	_____	+0.5 dB	±0.10 dB
1 MHz RES BW	–0.5 dB	_____	+0.5 dB	±0.10 dB
100 kHz RES BW	–0.5 dB	_____	+0.5 dB	±0.10 dB
30 kHz RES BW	–0.5 dB	_____	+0.5 dB	±0.10 dB

ManualsPlus.com

Table 14-3 Performance Test Record (4 of 23)

Agilent Technologies

Select model: 8563E ___ 8563EC___ Report No. _____

Serial No. _____ Date _____

Test Description	Results			Measurement Uncertainty
	Minimum	Measured	Maximum	
11. Resolution Bandwidth Switching and IF Alignment Uncertainty (continued)				
10 kHz RES BW	–0.5 dB	_____	+0.5 dB	±0.10 dB
3 kHz RES BW	–0.5 dB	_____	+0.5 dB	±0.10 dB
1 kHz RES BW	–0.5 dB	_____	+0.5 dB	±0.10 dB
300 Hz RES BW	–1.0 dB	_____	+1.0 dB	±0.10 dB
100 Hz RES BW	–0.5 dB	_____	+0.5 dB	±0.10 dB
30 Hz RES BW	–0.5 dB	_____	+0.5 dB	±0.10 dB
10 Hz RES BW	–0.5 dB	_____	+0.5 dB	±0.10 dB
3 Hz RES BW*	–0.5 dB	_____	+0.5 dB	±0.10 dB
1 Hz RES BW*	–0.5 dB	_____	+0.5 dB	±0.10 dB
12. Resolution Bandwidth Accuracy and Selectivity				
3 dB Bandwidth Accuracy				
2 MHz RES BW	–25%	_____	+50%	±1.33%
1 MHz RES BW	–25%	_____	+25%	±1.33%
300 kHz RES BW	–10%	_____	+10%	±1.33%
100 kHz RES BW	–10%	_____	+10%	±1.33%
30 kHz RES BW	–10%	_____	+10%	±1.33%
10 kHz RES BW	–10%	_____	+10%	±1.33%
3 kHz RES BW	–10%	_____	+10%	±1.33%
1 kHz RES BW	–10%	_____	+10%	±1.33%
300 Hz RES BW	–10%	_____	+10%	±1.33%
Selectivity				
2 MHz RES BW		_____	15:1	±2.8%
1 MHz RES BW		_____	15:1	±2.8%
300 kHz RES BW		_____	15:1	±2.8%

* 3 Hz and 1 Hz RES BW not available with Option 103.

ManualsPlus.com

Table 14-4 Performance Test Record (5 of 23)

Agilent Technologies

Select model: 8563E ___ 8563EC___ Report No. _____

Serial No. _____ Date _____

Test Description	Results			Measurement Uncertainty
	Minimum	Measured	Maximum	
12. Resolution Bandwidth Accuracy and Selectivity (continued)				
Selectivity (cont'd)				
100 kHz RES BW		_____	15:1	±2.8%
30 kHz RES BW		_____	15:1	±2.8%
10 kHz RES BW		_____	15:1	±2.8%
3 kHz RES BW		_____	15:1	±2.8%
1 kHz RES BW		_____	15:1	±2.8%
300 Hz RES BW		_____	15:1	±2.8%
13. Input Attenuator Switching Uncertainty				
Cumulative, 50 MHz				
20 dB ATTEN	–0.6 dB	_____	+0.6 dB	±0.12 dB
30 dB ATTEN	–1.2 dB	_____	+1.2 dB	±0.12 dB
40 dB ATTEN	–1.8 dB	_____	+1.8 dB	±0.12 dB
50 dB ATTEN	–1.8 dB	_____	+1.8 dB	±0.14 dB
60 dB ATTEN	–1.8 dB	_____	+1.8 dB	±0.14 dB
70 dB ATTEN	–1.8 dB	_____	+1.8 dB	±0.14 dB
Incremental, 50 MHz				
20 dB ATTEN	–0.6 dB	_____	+0.6 dB	±0.12 dB
30 dB ATTEN	–0.6 dB	_____	+0.6 dB	±0.12 dB
40 dB ATTEN	–0.6 dB	_____	+0.6 dB	±0.12 dB
50 dB ATTEN	–0.6 dB	_____	+0.6 dB	±0.14 dB
60 dB ATTEN	–0.6 dB	_____	+0.6 dB	±0.14 dB
70 dB ATTEN	–0.6 dB	_____	+0.6 dB	±0.14 dB
Cumulative, 2.9 GHz				
20 dB ATTEN	–0.6 dB	_____	+0.6 dB	±0.23 dB
30 dB ATTEN	–1.2 dB	_____	+1.2 dB	±0.23 dB

ManualsPlus.com

Table 14-5 Performance Test Record (6 of 23)

Agilent Technologies

Select model: 8563E ___ 8563EC___ Report No. _____

Serial No. _____ Date _____

Test Description	Results			Measurement Uncertainty
	Minimum	Measured	Maximum	
13. Input Attenuator Switching Uncertainty (continued)				
Cumulative, 2.9 GHz (cont'd)				
40 dB ATTEN	–1.8 dB	_____	+1.8 dB	±0.23 dB
50 dB ATTEN	–1.8 dB	_____	+1.8 dB	±0.23 dB
60 dB ATTEN	–1.8 dB	_____	+1.8 dB	+0.24/–0.25 dB
70 dB ATTEN	–1.8 dB	_____	+1.8 dB	+0.24/–0.25 dB
Incremental, 2.9 GHz				
20 dB ATTEN	–0.6 dB	_____	+0.6 dB	±0.23 dB
30 dB ATTEN	–0.6 dB	_____	+0.6 dB	±0.23 dB
40 dB ATTEN	–0.6 dB	_____	+0.6 dB	±0.23 dB
50 dB ATTEN	–0.6 dB	_____	+0.6 dB	±0.23 dB
60 dB ATTEN	–0.6 dB	_____	+0.6 dB	+0.24/–0.25 dB
70 dB ATTEN	–0.6 dB	_____	+0.6 dB	+0.24/–0.25 dB
15. IF Gain Uncertainty				
LOG, 10 dB steps				
–10 dBm REF LVL	–1.0 dB	_____	+1.0 dB	±0.11 dB
–20 dBm REF LVL	–1.0 dB	_____	+1.0 dB	±0.11 dB
–30 dBm REF LVL	–1.0 dB	_____	+1.0 dB	±0.11 dB
–40 dBm REF LVL	–1.0 dB	_____	+1.0 dB	±0.11 dB
–50 dBm REF LVL	–1.0 dB	_____	+1.0 dB	±0.11 dB
–60 dBm REF LVL	–1.0 dB	_____	+1.0 dB	±0.12 dB
–70 dBm REF LVL	–1.0 dB	_____	+1.0 dB	±0.12 dB
–80 dBm REF LVL	–1.0 dB	_____	+1.0 dB	±0.12 dB
LOG, 1 dB steps				
–1 dBm REF LVL	–1.0 dB	_____	+1.0 dB	±0.11 dB
–2 dBm REF LVL	–1.0 dB	_____	+1.0 dB	±0.11 dB
–3 dBm REF LVL	–1.0 dB	_____	+1.0 dB	±0.11 dB

ManualsPlus.com

Table 14-6 Performance Test Record (7 of 23)

Agilent Technologies

Select model: 8563E ___ 8563EC___ Report No. _____

Serial No. _____ Date _____

Test Description	Results			Measurement Uncertainty
	Minimum	Measured	Maximum	
15. IF Gain Uncertainty (continued)				
LOG, 1 dB steps (cont'd)				
–4 dBm REF LVL	–1.0 dB	_____	+1.0 dB	±0.11 dB
–5 dBm REF LVL	–1.0 dB	_____	+1.0 dB	±0.11 dB
–6 dBm REF LVL	–1.0 dB	_____	+1.0 dB	±0.11 dB
–7 dBm REF LVL	–1.0 dB	_____	+1.0 dB	±0.11 dB
–8 dBm REF LVL	–1.0 dB	_____	+1.0 dB	±0.11 dB
–9 dBm REF LVL	–1.0 dB	_____	+1.0 dB	±0.11 dB
–10 dBm REF LVL	–1.0 dB	_____	+1.0 dB	±0.11 dB
–11 dBm REF LVL	–1.0 dB	_____	+1.0 dB	±0.11 dB
–12 dBm REF LVL	–1.0 dB	_____	+1.0 dB	±0.11 dB
LINEAR, 10 dB steps				
–10 dBm REF LVL	–1.0 dB	_____	+1.0 dB	±0.11 dB
–20 dBm REF LVL	–1.0 dB	_____	+1.0 dB	±0.11 dB
–30 dBm REF LVL	–1.0 dB	_____	+1.0 dB	±0.11 dB
–40 dBm REF LVL	–1.0 dB	_____	+1.0 dB	±0.11 dB
LINEAR, 10 dB steps (cont'd)				
–50 dBm REF LVL	–1.0 dB	_____	+1.0 dB	±0.11 dB
–60 dBm REF LVL	–1.0 dB	_____	+1.0 dB	±0.12 dB
–70 dBm REF LVL	–1.0 dB	_____	+1.0 dB	±0.12 dB
–80 dBm REF LVL	–1.0 dB	_____	+1.0 dB	±0.12 dB
16. Scale Fidelity				
Cumulative, 10 dB/Div,				
RES BW ≥300 Hz				
–6 dB from REF LVL	–0.60 dB	_____	+0.60 dB	±0.24 dB
–12 dB from REF LVL	–0.85 dB	_____	+0.85 dB	±0.24 dB
–18 dB from REF LVL	–0.85 dB	_____	+0.85 dB	±0.24 dB

ManualsPlus.com

Table 14-7 Performance Test Record (8 of 23)

Agilent Technologies

Select model: 8563E ___ 8563EC___ Report No. _____

Serial No. _____ Date _____

Test Description	Results			Measurement Uncertainty
	Minimum	Measured	Maximum	
16. Scale Fidelity (continued)				
Cumulative, 10 dB/Div, (cont'd)				
RES BW ≥300 Hz (cont'd)				
–24 dB from REF LVL	–0.85 dB	_____	+0.85 dB	±0.24 dB
–30 dB from REF LVL	–0.85 dB	_____	+0.85 dB	±0.24 dB
–36 dB from REF LVL	–0.85 dB	_____	+0.85 dB	±0.24 dB
–42 dB from REF LVL	–0.85 dB	_____	+0.85 dB	±0.24 dB
–48 dB from REF LVL	–0.85 dB	_____	+0.85 dB	±0.24 dB
–54 dB from REF LVL	–0.85 dB	_____	+0.85 dB	±0.24 dB
–60 dB from REF LVL	–0.85 dB	_____	+0.85 dB	+0.25/–0.26 dB
–66 dB from REF LVL	–0.85 dB	_____	+0.85 dB	+0.25/–0.26 dB
–72 dB from REF LVL	–0.85 dB	_____	+0.85 dB	+0.25/–0.26 dB
–78 dB from REF LVL	–0.85 dB	_____	+0.85 dB	+0.25/–0.26 dB
–84 dB from REF LVL	–0.85 dB	_____	+0.85 dB	+0.25/–0.26 dB
–90 dB from REF LVL	–0.85 dB	_____	+0.85 dB	+0.25/–0.26 dB
Incremental, 10 dB/Div,				
RES BW ≥300 Hz				
–12 dB from REF LVL	–0.10 dB	_____	+0.10 dB	±0.04 dB
–18 dB from REF LVL	–0.10 dB	_____	+0.10 dB	±0.04 dB
–24 dB from REF LVL	–0.10 dB	_____	+0.10 dB	±0.04 dB
–30 dB from REF LVL	–0.10 dB	_____	+0.10 dB	±0.04 dB
–36 dB from REF LVL	–0.10 dB	_____	+0.10 dB	±0.04 dB
–42 dB from REF LVL	–0.10 dB	_____	+0.10 dB	±0.04 dB
–48 dB from REF LVL	–0.10 dB	_____	+0.10 dB	±0.04 dB
–54 dB from REF LVL	–0.10 dB	_____	+0.10 dB	±0.04 dB
–60 dB from REF LVL	–0.10 dB	_____	+0.10 dB	±0.04 dB
–66 dB from REF LVL	–0.10 dB	_____	+0.10 dB	±0.04 dB
–72 dB from REF LVL	–0.10 dB	_____	+0.10 dB	±0.05 dB

ManualsPlus.com

Table 14-8 Performance Test Record (9 of 23)

Agilent Technologies

Select model: 8563E ___ 8563EC___ Report No. _____

Serial No. _____ Date _____

Test Description	Results			Measurement Uncertainty
	Minimum	Measured	Maximum	
16. Scale Fidelity (continued)				
Incremental, 10 dB/Div,				
RES BW ≥300 Hz (cont'd)				
–78 dB from REF LVL	–0.10 dB	_____	+0.10 dB	±0.05 dB
–84 dB from REF LVL	–0.10 dB	_____	+0.10 dB	±0.05 dB
–90 dB from REF LVL	–0.10 dB	_____	+0.10 dB	±0.05 dB
Cumulative, 10 dB/Div,				
RES BW ≤100 Hz				
–6 dB from REF LVL	–0.60 dB	_____	+0.60 dB	±0.24 dB
–12 dB from REF LVL	–0.85 dB	_____	+0.85 dB	±0.24 dB
–18 dB from REF LVL	–0.85 dB	_____	+0.85 dB	±0.24 dB
–24 dB from REF LVL	–0.85 dB	_____	+0.85 dB	±0.24 dB
–30 dB from REF LVL	–0.85 dB	_____	+0.85 dB	±0.24 dB
–36 dB from REF LVL	–0.85 dB	_____	+0.85 dB	±0.24 dB
–42 dB from REF LVL	–0.85 dB	_____	+0.85 dB	±0.24 dB
–48 dB from REF LVL	–0.85 dB	_____	+0.85 dB	±0.24 dB
–54 dB from REF LVL	–0.85 dB	_____	+0.85 dB	±0.24 dB
–60 dB from REF LVL	–0.85 dB	_____	+0.85 dB	+0.25/–0.26 dB
–66 dB from REF LVL	–0.85 dB	_____	+0.85 dB	+0.25/–0.26 dB
–72 dB from REF LVL	–0.85 dB	_____	+0.85 dB	+0.25/–0.26 dB
–78 dB from REF LVL	–0.85 dB	_____	+0.85 dB	+0.25/–0.26 dB
–84 dB from REF LVL	–0.85 dB	_____	+0.85 dB	+0.25/–0.26 dB
–90 dB from REF LVL	–0.85 dB	_____	+0.85 dB	+0.25/–0.26 dB
–94 dB from REF LVL	–1.50 dB	_____	+1.50 dB	+0.25/–0.26 dB
–98 dB from REF LVL	–1.50 dB	_____	+1.50 dB	+0.25/–0.26 dB

ManualsPlus.com

Table 14-9 Performance Test Record (10 of 23)

Agilent Technologies

Select model: 8563E ___ 8563EC___ Report No. _____

Serial No. _____ Date _____

Test Description	Results			Measurement Uncertainty
	Minimum	Measured	Maximum	
16. Scale Fidelity (continued)				
Incremental, 10 dB/Div,				
RES BW ≤100 Hz				
–12 dB from REF LVL	–0.20 dB	_____	+0.20 dB	±0.04 dB
–18 dB from REF LVL	–0.20 dB	_____	+0.20 dB	±0.04 dB
–24 dB from REF LVL	–0.20 dB	_____	+0.20 dB	±0.04 dB
–30 dB from REF LVL	–0.20 dB	_____	+0.20 dB	±0.04 dB
–36 dB from REF LVL	–0.20 dB	_____	+0.20 dB	±0.04 dB
–42 dB from REF LVL	–0.20 dB	_____	+0.20 dB	±0.04 dB
–48 dB from REF LVL	–0.20 dB	_____	+0.20 dB	±0.04 dB
–54 dB from REF LVL	–0.20 dB	_____	+0.20 dB	±0.04 dB
–60 dB from REF LVL	–0.20 dB	_____	+0.20 dB	±0.04 dB
–66 dB from REF LVL	–0.20 dB	_____	+0.20 dB	±0.04 dB
–72 dB from REF LVL	–0.20 dB	_____	+0.20 dB	±0.05 dB
–78 dB from REF LVL	–0.20 dB	_____	+0.20 dB	±0.05 dB
–84 dB from REF LVL	–0.20 dB	_____	+0.20 dB	±0.05 dB
–90 dB from REF LVL	–0.20 dB	_____	+0.20 dB	±0.05 dB
Cumulative, 2 dB/Div				
–2 dB from REF LVL	–0.20 dB	_____	+0.20 dB	±0.053 dB
–4 dB from REF LVL	–0.40 dB	_____	+0.40 dB	±0.053 dB
–6 dB from REF LVL	–0.60 dB	_____	+0.60 dB	±0.053 dB
–8 dB from REF LVL	–0.80 dB	_____	+0.80 dB	±0.053 dB
–10 dB from REF LVL	–0.85 dB	_____	+0.85 dB	±0.053 dB
–12 dB from REF LVL	–0.85 dB	_____	+0.85 dB	±0.053 dB
–14 dB from REF LVL	–0.85 dB	_____	+0.85 dB	±0.053 dB
–16 dB from REF LVL	–0.85 dB	_____	+0.85 dB	±0.053 dB
–18 dB from REF LVL	–0.85 dB	_____	+0.85 dB	±0.053 dB

ManualsPlus.com

Table 14-10 Performance Test Record (11 of 23)

Agilent Technologies

Select model: 8563E ___ 8563EC___ Report No. _____

Serial No. _____ Date _____

Test Description	Results			Measurement Uncertainty
	Minimum	Measured	Maximum	
16. Scale Fidelity (continued)				
Incremental, 2 dB/Div				
–2 dB from REF LVL	–0.10 dB	_____	+0.10 dB	±0.04 dB
–4 dB from REF LVL	–0.10 dB	_____	+0.10 dB	±0.04 dB
–6 dB from REF LVL	–0.10 dB	_____	+0.10 dB	±0.04 dB
–8 dB from REF LVL	–0.10 dB	_____	+0.10 dB	±0.04 dB
–10 dB from REF LVL	–0.10 dB	_____	+0.10 dB	±0.04 dB
–12 dB from REF LVL	–0.10 dB	_____	+0.10 dB	±0.04 dB
–14 dB from REF LVL	–0.10 dB	_____	+0.10 dB	±0.04 dB
–16 dB from REF LVL	–0.10 dB	_____	+0.10 dB	±0.04 dB
–18 dB from REF LVL	–0.10 dB	_____	+0.10 dB	±0.04 dB
Linear				
–2 dB from REF LVL	–2.33 dB	_____	–1.68 dB	±0.04 dB
–4 dB from REF LVL	–4.42 dB	_____	–3.60 dB	±0.04 dB
–6 dB from REF LVL	–6.54 dB	_____	–5.50 dB	±0.04 dB
–8 dB from REF LVL	–8.68 dB	_____	–7.37 dB	±0.04 dB
–10 dB from REF LVL	–10.87 dB	_____	–9.21 dB	±0.04 dB
–12 dB from REF LVL	–13.10 dB	_____	–11.02 dB	±0.04 dB
–14 dB from REF LVL	–15.42 dB	_____	–12.78 dB	±0.04 dB
–16 dB from REF LVL	–17.82 dB	_____	–14.49 dB	±0.04 dB
–18 dB from REF LVL	–20.36 dB	_____	–16.14 dB	±0.04 dB
17. Residual FM				
Non-Option 103		_____	1 Hz	±0.2 Hz
Option 103		_____	10 Hz	±0.8 Hz

ManualsPlus.com

Table 14-11 Performance Test Record (12 of 23)

Agilent Technologies

Select model: 8563E ___ 8563EC___ Report No. _____

Serial No. _____ Date _____

Test Description	Results			Measurement Uncertainty
	Minimum	Measured	Maximum	
19. Noise Sidebands				
Non-Option 103				
+100 Hz offset (serial prefix <3436A)		_____	–80 dBc/Hz	+1.22/–1.34 dB
+100 Hz offset (serial prefix ≥3436A)		_____	–88 dBc/Hz	+1.22/–1.34 dB
–100 Hz offset (serial prefix <3436A)		_____	–80 dBc/Hz	+1.22/–1.34 dB
–100 Hz offset (serial prefix ≥3436A)		_____	–88 dBc/Hz	+1.22/–1.34 dB
+1 kHz offset		_____	–97 dBc/Hz	+1.22/–1.34 dB
–1 kHz offset		_____	–97 dBc/Hz	+1.22/–1.34 dB
+10 kHz offset		_____	–113 dBc/Hz	+1.22/–1.34 dB
–10 kHz offset		_____	–113 dBc/Hz	+1.22/–1.34 dB
+30 kHz offset		_____	–113 dBc/Hz	+1.22/–1.34 dB
–30 kHz offset		_____	–113 dBc/Hz	+1.22/–1.34 dB
+100 kHz offset (serial prefix <3436A)		_____	–113 dBc/Hz	+1.22/–1.34 dB
+100 kHz offset (serial prefix ≥3436A)		_____	–117 dBc/Hz	+1.22/–1.34 dB
–100 kHz offset (serial prefix <3436A)		_____	–113 dBc/Hz	+1.22/–1.34 dB
–100 kHz offset (serial prefix ≥3436A)		_____	–117 dBc/Hz	+1.22/–1.34 dB
Option 103				
+100 Hz offset		_____	–70 dBc/Hz	+1.22/–1.34 dB
–100 Hz offset		_____	–70 dBc/Hz	+1.22/–1.34 dB
+1 kHz offset		_____	–90 dBc/Hz	+1.22/–1.34 dB
–1 kHz offset		_____	–90 dBc/Hz	+1.22/–1.34 dB
+10 kHz offset		_____	–113 dBc/Hz	+1.22/–1.34 dB
–10 kHz offset		_____	–113 dBc/Hz	+1.22/–1.34 dB

ManualsPlus.com

Table 14-12 Performance Test Record (13 of 23)

Agilent Technologies

Select model: 8563E ___ 8563EC___ Report No. _____

Serial No. _____ Date _____

Test Description	Results			Measurement Uncertainty
	Minimum	Measured	Maximum	
19. Noise Sidebands (continued)				
Option 103 (cont'd)				
+30 kHz offset		_____	–113 dBc/Hz	+1.22/–1.34 dB
–30 kHz offset		_____	–113 dBc/Hz	+1.22/–1.34 dB
+100 kHz offset (serial prefix <3436A)		_____	–113 dBc/Hz	+1.22/–1.34 dB
+100 kHz offset (serial prefix ≥3436A)		_____	–117 dBc/Hz	+1.22/–1.34 dB
–100 kHz offset (serial prefix <3436A)		_____	–113 dBc/Hz	+1.22/–1.34 dB
–100 kHz offset (serial prefix ≥3436A)		_____	–117 dBc/Hz	+1.22/–1.34 dB
23. Image, Multiple, and Out-of-Range Responses				
2 GHz CENTER FREQ				
2021.4 MHz		_____	–80 dBc	+0.8/–1.0 dB
2621.4 MHz		_____	–80 dBc	+0.8/–1.0 dB
2321.4 MHz		_____	–80 dBc	+0.8/–1.0 dB
2600.0 MHz		_____	–80 dBc	+0.8/–1.0 dB
7910.7 MHz		_____	–80 dBc	+0.8/–1.0 dB
9821.4 MHz		_____	–80 dBc	+0.8/–1.0 dB
4 GHz CENTER FREQ				
4021.4 MHz		_____	–80 dBc	+0.8/–1.0 dB
4621.4 MHz		_____	–80 dBc	+0.8/–1.0 dB
4321.4 MHz		_____	–80 dBc	+0.8/–1.0 dB
4600.0 MHz		_____	–80 dBc	+0.8/–1.0 dB
8310.7 MHz		_____	–80 dBc	+0.8/–1.0 dB
8932.1 MHz		_____	–80 dBc	+0.8/–1.0 dB

ManualsPlus.com

Table 14-13 Performance Test Record (14 of 23)

Agilent Technologies

Select model: 8563E ___ 8563EC___ Report No. _____

Serial No. _____ Date _____

Test Description	Results			Measurement Uncertainty
	Minimum	Measured	Maximum	
23. Image, Multiple, and Out-of-Range Responses (continued)				
9 GHz CENTER FREQ				
9021.4 MHz		_____	–80 dBc	+0.8/–1.0 dB
9621.4 MHz		_____	–80 dBc	+0.8/–1.0 dB
9321.4 MHz		_____	–80 dBc	+0.8/–1.0 dB
9600.0 MHz		_____	–80 dBc	+0.8/–1.0 dB
18310.7 MHz		_____	–80 dBc	+0.8/–1.0 dB
18932.1 MHz		_____	–80 dBc	+0.8/–1.0 dB
15 GHz CENTER FREQ				
15021.400 MHz		_____	–80 dBc	+0.9/–1.1 dB
15621.400 MHz		_____	–80 dBc	+0.9/–1.1 dB
22655.350 MHz		_____	–80 dBc	+0.9/–1.1 dB
23276.750 MHz		_____	–80 dBc	+0.9/–1.1 dB
7344.650 MHz		_____	–80 dBc	+0.9/–1.1 dB
7966.050 MHz		_____	–80 dBc	+0.9/–1.1 dB
20 GHz CENTER FREQ				
20021.400 MHz		_____	–80 dBc	+0.9/–1.1 dB
20621.400 MHz		_____	–80 dBc	+0.9/–1.1 dB
15543.725 MHz		_____	–80 dBc	+0.9/–1.1 dB
25699.075 MHz		_____	–80 dBc	+0.9/–1.1 dB
9844.650 MHz		_____	–80 dBc	+0.9/–1.1 dB
10466.050 MHz		_____	–80 dBc	+0.9/–1.1 dB

ManualsPlus.com

Table 14-14 Performance Test Record (15 of 23)

Agilent Technologies

Select model: 8563E ___ 8563EC___ Report No. _____

Serial No. _____ Date _____

Test Description	Results			Measurement Uncertainty
	Minimum	Measured	Maximum	
29. Frequency Readout Accuracy and Frequency Count Marker Accuracy				
Frequency Readout Accuracy:				
1.5 GHz CENTER FREQ				
1 MHz SPAN	1.499988GHz	_____	1.500012GHz	±1 Hz
10 MHz SPAN	1.49948 GHz	_____	1.50052 GHz	±1 Hz
20 MHz SPAN	1.49895 GHz	_____	1.50105 GHz	±1 Hz
50 MHz SPAN	1.49745 GHz	_____	1.50255 GHz	±1 Hz
100 MHz SPAN	1.4948 GHz	_____	1.5052 GHz	±1 Hz
1 GHz SPAN	1.450 GHz	_____	1.550 GHz	±1 Hz
4.0 GHz CENTER FREQ				
1 MHz SPAN	3.999988GHz	_____	4.000012GHz	±1 Hz
10 MHz SPAN	3.99948 GHz	_____	4.00052 GHz	±1 Hz
20 MHz SPAN	3.99895 GHz	_____	4.00105 GHz	±1 Hz
50 MHz SPAN	3.99745 GHz	_____	4.00255 GHz	±1 Hz
100 MHz SPAN	3.9948 GHz	_____	4.0052 GHz	±1 Hz
1 GHz SPAN	3.950 GHz	_____	4.050 GHz	±1 Hz
9.0 GHz CENTER FREQ				
1 MHz SPAN	8.999988GHz	_____	9.000012GHz	±2 Hz
10 MHz SPAN	8.99948 GHz	_____	9.00052 GHz	±2 Hz
20 MHz SPAN	8.99895 GHz	_____	9.00105 GHz	±2 Hz
50 MHz SPAN	8.99745 GHz	_____	9.00255 GHz	±2 Hz
100 MHz SPAN	8.9948 GHz	_____	9.0052 GHz	±2 Hz
1 GHz SPAN	8.950 GHz	_____	9.050 GHz	±2 Hz
16.0 GHz CENTER FREQ				
1 MHz SPAN	15.999988GHz	_____	16.000012GHz	±3 Hz
10 MHz SPAN	15.99948 GHz	_____	16.00052 GHz	±3 Hz

ManualsPlus.com

Table 14-15 Performance Test Record (16 of 23)

Agilent Technologies

Select model: 8563E ___ 8563EC___ Report No. _____

Serial No. _____ Date _____

Test Description	Results			Measurement Uncertainty
	Minimum	Measured	Maximum	
29. Frequency Readout Accuracy and Frequency Count Marker Accuracy (continued)				
Frequency Readout Accuracy: (cont'd)				
16.0 GHz CENTER FREQ (cont'd)				
20 MHz SPAN	15.99895 GHz	_____	16.00105 GHz	±3 Hz
50 MHz SPAN	15.99745 GHz	_____	16.00255 GHz	±3 Hz
100 MHz SPAN	15.9948 GHz	_____	16.0052 GHz	±3 Hz
1 GHz SPAN	15.950 GHz	_____	16.050 GHz	±3 Hz
21.0 GHz CENTER FREQ				
1 MHz SPAN	20.999988GHz	_____	21.000012GHz	±4 Hz
10 MHz SPAN	20.99948 GHz	_____	21.00052 GHz	±4 Hz
20 MHz SPAN	20.99895 GHz	_____	21.00105 GHz	±4 Hz
50 MHz SPAN	20.99745 GHz	_____	21.00255 GHz	±4 Hz
100 MHz SPAN	20.9948 GHz	_____	21.0052 GHz	±4 Hz
1 GHz SPAN	20.950 GHz	_____	21.050 GHz	±4 Hz
Frequency Count Marker Accuracy:				
1.5 GHz CENTER FREQ	1.499999997 GHz	_____	1.500000003 GHz	±1 Hz
4.0 GHz CENTER FREQ	3.999999997 GHz	_____	4.000000003 GHz	±1 Hz
9.0 GHz CENTER FREQ	8.999999995 GHz	_____	9.000000005 GHz	±2 Hz
16.0 GHz CENTER FREQ	15.999999991 GHz	_____	16.000000009 GHz	±3 Hz
21.0 GHz CENTER FREQ	20.999999991 GHz	_____	21.000000009 GHz	±4 Hz

ManualsPlus.com

Table 14-16 Performance Test Record (17 of 23)

Agilent Technologies

Select model: 8563E ___ 8563EC___ Report No. _____

Serial No. _____ Date _____

Test Description	Results			Measurement Uncertainty
	Minimum	Measured	Maximum	
32. Pulse Digitization Uncertainty				
LOG 5dB/Div				
1 MHz RES BW		_____	1.25 dB	±0.15 dB
2 MHz RES BW		_____	3.0 dB	+0.43/–0.44 dB
LINEAR				
1 MHz RES BW		_____	4%	±0.31%
2 MHz RES BW		_____	12%	±0.65%
35. Second Harmonic Distortion (SHD)				
SHD (< 1.45 GHz)				
Serial Prefix <3645A		_____	–72 dBc	+1.87/–2.28 dB
Serial Prefix ≥3645A		_____	–79 dBc	+1.87/–2.28 dB
Option H13		_____	–79 dBc	+1.87/–2.28 dB
SHD (1.5 GHz)		_____	–85 dBc	+2.32/–2.66 dB
SHD (> 2.0 GHz)		_____	–100 dBc	+2.32/–2.66 dB
39. Frequency Response				
Band 0, dc coupled				
Maximum Positive Response		_____	+1.8 dB	+0.32/–0.34 dB
Maximum Negative Response	–1.8 dB	_____		+0.32/–0.34 dB
Peak-to-Peak Response		_____	2.5 dB	+0.32/–0.34 dB
Band 1				
Maximum Positive Response		_____	+2.4 dB	+0.44/–0.49 dB
Maximum Negative Response	–2.4 dB	_____		+0.44/–0.49 dB
Peak-to-Peak Response		_____	3.0 dB	+0.44/–0.49 dB

ManualsPlus.com

Table 14-17 Performance Test Record (18 of 23)

Agilent Technologies

Select model: 8563E ___ 8563EC___ Report No. _____

Serial No. _____ Date _____

Test Description	Results			Measurement Uncertainty
	Minimum	Measured	Maximum	
39. Frequency Response (continued)				
Band 2				
Maximum Positive Response		_____	+2.9 dB	+0.45/–0.50 dB
Maximum Negative Response	–2.9 dB	_____		+0.45/–0.50 dB
Peak-to-Peak Response		_____	4.4 dB	+0.45/–0.50 dB
Band 3, < 22 GHz				
Maximum Positive Response		_____	+4.0 dB	+0.51/–0.58 dB
Maximum Negative Response	–4.0 dB	_____		+0.51/–0.58 dB
Peak-to-Peak Response		_____	5.0 dB	+0.51/–0.58 dB
Band 3, > 22 GHz				
Maximum Positive Response		_____	+4.0 dB	+0.51/–0.58 dB
Maximum Negative Response	–4.0 dB	_____		+0.51/–0.58 dB
Peak-to-Peak Response		_____	6.6 dB	+0.51/–0.58 dB
Band 0, 100 MHz to 2.0 GHz				
(serial prefix ≥3645A)				
Peak-to-Peak Response		_____	2.0 dB	+0.32/–0.34 dB
Band Switching Uncertainty:				
Band 0 to Band 1		_____	3.75 dB	+0.76/–0.83 dB
Band 0 to Band 2		_____	4.45 dB	+0.77/–0.84 dB
Band 0 to Band 3,<22GHz		_____	4.75 dB	+0.84/–0.92 dB
Band 0 to Band 3,>22GHz		_____	5.55 dB	+0.84/–0.92 dB
Band 1 to Band 2		_____	4.7 dB	+0.89/–0.99 dB
Band 1 to Band 3,<22GHz		_____	5.0 dB	+0.95/–1.07dB

ManualsPlus.com

Table 14-18 Performance Test Record (19 of 23)

Agilent Technologies

Select model: 8563E ___ 8563EC___ Report No. _____

Serial No. _____ Date _____

Test Description	Results			Measurement Uncertainty
	Minimum	Measured	Maximum	
39. Frequency Response (continued)				
Band Switching Uncertainty: (cont'd)				
Band 1 to Band 3,>22GHz		_____	5.8 dB	+0.95/–1.07dB
Band 2 to Band 3,<22GHz		_____	5.7 dB	+0.96/–1.08dB
Band 2 to Band 3,>22GHz		_____	6.5 dB	+0.96/–1.08dB
Band 3,< 22 GHz to Band 3,>22 GHz		_____	6.8 dB	+0.96/–1.08 dB
42. Frequency Span Accuracy				
1 kHz SPAN	–1 %	_____	+1 %	±0.24 %
2 kHz SPAN	–1 %	_____	+1 %	±0.24 %
5 kHz SPAN	–1 %	_____	+1 %	±0.24 %
10 kHz SPAN	–1 %	_____	+1 %	±0.24 %
20 kHz SPAN	–1 %	_____	+1 %	±0.24 %
50 kHz SPAN	–1 %	_____	+1 %	±0.24 %
100 kHz SPAN	–1 %	_____	+1 %	±0.24 %
200 kHz SPAN	–1 %	_____	+1 %	±0.24 %
500 kHz SPAN	–1 %	_____	+1 %	±0.24 %
1 MHz SPAN	–1 %	_____	+1 %	±0.24 %
2 MHz SPAN	–1 %	_____	+1 %	±0.24 %
5 MHz SPAN	–5 %	_____	+5 %	±0.24 %
10 MHz SPAN	–5 %	_____	+5 %	±0.24 %
20 MHz SPAN	–5 %	_____	+5 %	±0.24 %
50 MHz SPAN	–5 %	_____	+5 %	±0.24 %
100 MHz SPAN	–5 %	_____	+5 %	±0.24 %
200 MHz SPAN	–5 %	_____	+5 %	±0.24 %
500 MHz SPAN	–5 %	_____	+5 %	±0.24 %

ManualsPlus.com

Table 14-19 Performance Test Record (20 of 23)

Agilent Technologies

Select model: 8563E ___ 8563EC___ Report No. _____

Serial No. _____ Date _____

Test Description	Results			Measurement Uncertainty
	Minimum	Measured	Maximum	
45. Third Order Intermodulation Distortion				
TOI Distortion, 45 MHz				
Serial Prefix <3645A		_____	–78 dBc	+1.41/–1.43 dB
Serial Prefix ≥3645A		_____	–82 dBc	+1.41/–1.43 dB
Option H13		_____	–82 dBc	+1.41/–1.43 dB
TOI Distortion, 5 GHz		_____	–90 dBc	+2.04/–2.12 dB
TOI Distortion, 8 GHz		_____	–75 dBc	+2.04/–2.12 dB
49. Gain Compression				
Gain Compression, 2 GHz		_____	1 dB	±0.19 dB
Gain Compression, 4 GHz		_____	1 dB	±0.22 dB
Gain Compression, 7 GHz		_____	1 dB	±0.22 dB
52. 1ST LO OUTPUT Amplitude				
Maximum 1ST LO OUTPUT				
AMPLITUDE		_____	+18.5 dBm	±0.18 dB
Minimum 1ST LO OUTPUT				
AMPLITUDE	+14.5 dBm	_____		±0.18 dB
53. Sweep Time Accuracy				
50 µs SWEEP TIME†	42.5 µs	_____	57.5 µs	±750 ns
100 µs SWEEP TIME†	85.0 µs	_____	115 µs	±1.5 µs
200 µs SWEEP TIME†	170 µs	_____	230 µs	±3.0 µs
500 µs SWEEP TIME†	425 µs	_____	575 µs	±7.5 µs
1 ms SWEEP TIME†	850 µs	_____	1.15 ms	±15 µs
2 ms SWEEP TIME†	1.70 ms	_____	2.30 ms	±30 µs

† These entries apply only to E-Series spectrum analyzers without Option 007.

ManualsPlus.com

Table 14-20 Performance Test Record (21 of 23)

Agilent Technologies

Select model: 8563E ___ 8563EC___ Report No. _____

Serial No. _____ Date _____

Test Description	Results			Measurement Uncertainty
	Minimum	Measured	Maximum	
53. Sweep Time Accuracy (continued)				
5 ms SWEEP TIME†	4.25 ms	_____	5.75 ms	±75 µs
10 ms SWEEP TIME†	8.50 ms	_____	11.5 ms	±150 µs
20 ms SWEEP TIME†	17.0 ms	_____	23.0 ms	±300 µs
30 ms SWEEP TIME	29.7 ms	_____	30.3 ms	±209 ns
50 ms SWEEP TIME	49.5 ms	_____	50.5 ms	±281 ns
100 ms SWEEP TIME	99.0 ms	_____	101.0 ms	±461 ns
200 ms SWEEP TIME	198.0 ms	_____	202.0 ms	±821 ns
500 ms SWEEP TIME	495.0 ms	_____	505.0 ms	±1.901 µs
1 s SWEEP TIME	990.0 ms	_____	1.010 s	±3.7 µs
2 s SWEEP TIME	1.980 s	_____	2.020 s	±7.3 µs
5 s SWEEP TIME	4.950 s	_____	5.050 s	±18.1 µs
10 s SWEEP TIME	9.900 s	_____	10.10 s	±36.1 µs
20 s SWEEP TIME	19.80 s	_____	20.20 s	±72.1 µs
50 s SWEEP TIME	49.50 s	_____	50.50 s	±180.1 µs
100 s SWEEP TIME	99.00 s	_____	101.0 s	±360.1 µs
56. Residual Responses				
200 kHz to 2.9 GHz		_____	–90 dBm	+1.24/–1.37 dB
2.9 GHz to 6.5 GHz		_____	–90 dBm	+1.24/–1.37 dB
57. IF INPUT Amplitude Accuracy (Non-Option 327 only)				
IF INPUT Amplitude	–31.5 dBm	_____	–28.5 dBm	+0.40/–0.44 dB

† These entries apply only to E-Series spectrum analyzers without Option 007.

ManualsPlus.com

Table 14-21 Performance Test Record (22 of 23)

Agilent Technologies

Select model: 8563E ___ 8563EC___ Report No. _____

Serial No. _____ Date _____

Test Description	Results			Measurement Uncertainty
	Minimum	Measured	Maximum	
58. Gate Delay Accuracy and Gate Length Accuracy				
Serial prefix <3310A				
20 °C to 30 °C:				
MIN Gate Delay	1.9985 µs	_____	4.0015 µs	±21 ns
MAX Gate Delay	1.9985 µs	_____	4.0015 µs	±21 ns
1 µs Gate Length	799.5 ns	_____	1200.5 ns	±11 ns
65 ms Gate Length	64.967 ms	_____	65.033 ms	±752 ns
–10 °C to 55 °C:				
MIN Gate Delay	1.9964 µs	_____	4.0036 µs	±21 ns
MAX Gate Delay	1.9964 µs	_____	4.0036 µs	±21 ns
1 µs Gate Length	798.8 ns	_____	1201.2 ns	±11 ns
65 ms Gate Length	64.922 ms	_____	65.078 ms	±752 ns
Serial prefix ≥3310A				
MIN Gate Delay	2.0000 µs	_____	4.0000 µs	±21 ns
MAX Gate Delay	2.0000 µs	_____	4.0000 µs	±21 ns
1 µs Gate Length	0.0000 ns	_____	2.0000 µs	±11 ns
65 ms Gate Length	64.999 ms	_____	65.001 ms	±752 ns
59. Delayed Sweep Accuracy				
Serial Prefix <3310A				
20 °C to 30 °C:				
1000 µs	998.5 µs	_____	1001.5 µs	±114 ns
2000 µs	1998 µs	_____	2002 µs	±124 ns
5000 µs	4996.5 µs	_____	5003.5 µs	±154 ns
10000 µs	9994 µs	_____	10006 µs	±204 ns
20000 µs	19989 µs	_____	20011 µs	±304 ns
50000 µs	49974 µs	_____	50026 µs	±604 ns
65000 µs	64966.5 µs	_____	65033.5 µs	±754 ns

ManualsPlus.com

Table 14-22 Performance Test Record (23 of 23)

Agilent Technologies

Select model: 8563E ___ 8563EC___ Report No. _____

Serial No. _____ Date _____

Test Description	Results			Measurement Uncertainty
	Minimum	Measured	Maximum	
59. Delayed Sweep Accuracy (continued)				
Serial Prefix <3310A (cont'd)				
–10 °C to 55 °C:				
1000 µs	997.8 µs	_____	1002.2 µs	±114 ns
2000 µs	1996.6 µs	_____	2003.4 µs	±124 ns
5000 µs	4993 µs	_____	5007 µs	±154 ns
10000 µs	9987 µs	_____	10013 µs	±204 ns
20000 µs	19975 µs	_____	20025 µs	±304 ns
50000 µs	49939 µs	_____	50061 µs	±604 ns
65000 µs	64922 µs	_____	65078 µs	±754 ns
Serial Prefix ≥3310A				
1000 µs	999 µs	_____	1001 µs	±114 ns
2000 µs	1999 µs	_____	2001 µs	±124 ns
5000 µs	4999 µs	_____	5001 µs	±154 ns
10000 µs	9999 µs	_____	10001 µs	±204 ns
20000 µs	19999 µs	_____	20001 µs	±304 ns
50000 µs	49999 µs	_____	50001 µs	±604 ns
65000 µs	64999 µs	_____	65001 µs	±754 ns

ManualsPlus.com

ManualsPlus.com

15 8564E/EC Performance Test Record

ManualsPlus.com

Test Record

Table 15-1 8564E/EC Performance Test Record

Agilent Technologies
Address:
_____
_____

Report No. _____
Date _____
(e.g. 10 SEP 1989)

Select model: 8564E ___ 8564EC ___
Serial No. _____
Firmware Revision _____

Options _____

Customer _____
Ambient temperature _____ °C
Power mains line frequency _____ Hz (nominal)

Tested by _____
Relative humidity_____%

Test Equipment Used

Description	Model No.	Trace No.	Cal Due Date
Synthesized Sweeper #1			
Synthesized Sweeper #2			
Synthesized Signal Generator			
Synthesizer/Level Generator			
Frequency Standard			
Measuring Receiver			
RF Power Sensor			
Low-Power Power Sensor			
Microwave Power Sensor			
Millimeter Power Sensor			
Pulse/Function Generator			
Microwave Frequency Counter			
Universal Frequency Counter			
Oscilloscope			
Amplifier			
Power Splitter			
1.8 GHz Low-Pass Filter			
4.4 GHz Low-Pass Filter			
50 MHz Low-Pass Filter			
50 Ω Termination			
20 dB Fixed Attenuator			
10 dB Fixed Attenuator			
1 dB Step Attenuator			
10 dB Step Attenuator			
DVM			
Function Generator			

Notes/Comments: _____

ManualsPlus.com

Table 15-1 8564E/EC Performance Test Record

ManualsPlus.com

Table 15-2 Performance Test Record (2 of 27)

Agilent Technologies

Select model: 8564E ___ 8564EC ___ Report No. _____

Serial No. _____ Date _____

Test Description	Results			Measurement Uncertainty
	Minimum	Measured	Maximum	
1. 10 MHz Reference Output Accuracy (Non-Option 103)				
5-minute Warm-up Error	-1×10^{-7}	_____	$+1 \times 10^{-7}$	$\pm 2.004 \times 10^{-9}$
(0 °C to +55 °C)				
5-minute Warm-up Error	-1×10^{-6}	_____	$+1 \times 10^{-6}$	$\pm 2.004 \times 10^{-9}$
(–10 °C to 0 °C)				
15-minute Warm-up Error	-1×10^{-8}	_____	$+1 \times 10^{-8}$	$\pm 2.003 \times 10^{-9}$
2. 10 MHz Reference Output Accuracy (Option 103)				
Calibrator Frequency	299.9988 MHz	_____	300.0012 MHz	±55.75 Hz
3. Fast Sweep Time Accuracy				
(EC-Series and E-Series with Option 007)	299.700 MHz	_____	300.300 MHz	±55.75 Hz
4. Calibrator Amplitude Accuracy				
Calibrator Amplitude	–10.30 dBm	_____	+9.70 dB	±0.12 dB
9. Displayed Average Noise Level				
Non-Option 103:				
30 Hz (Option 006)		_____	–90 dBm	+1.24/–1.37 dB
1 kHz (Option 006)		_____	–105 dBm	+1.24/–1.37 dB
10 kHz		_____	–120 dBm	+1.24/–1.37 dB
100 kHz		_____	–120 dBm	+1.24/–1.37 dB
1 MHz to 10 MHz		_____	–140 dBm	+1.24/–1.37 dB
10 MHz to 2.9 GHz				
Serial Prefix <3641A		_____	–140 dBm	+1.24/–1.37 dB
Serial Prefix ≥3641A		_____	–145 dBm	+1.24/–1.37 dB
Option H13		_____	–145 dBm	+1.24/–1.37 dB
2.9 GHz to 6.46 GHz		_____	–147 dBm	+1.24/–1.37 dB

ManualsPlus.com

Test Description	Results			Measurement Uncertainty
	Minimum	Measured	Maximum	
6.46 GHz to 13.2 GHz		_____	–143 dBm	+1.24/–1.37 dB

ManualsPlus.com

Table 15-3 Performance Test Record (3 of 27)

Agilent Technologies

Select model: 8564E ___ 8564EC ___ Report No. _____

Serial No. _____ Date _____

Test Description	Results			Measurement Uncertainty
	Minimum	Measured	Maximum	
9. DANL (continued)				
13.2 GHz to 22.0 GHz		_____	–140 dBm	+1.24/–1.37 dB
22.0 GHz to 26.8 GHz		_____	–136 dBm	+1.24/–1.37 dB
26.8 GHz to 31.15 GHz		_____	–139 dBm	+1.24/–1.37 dB
31.15 GHz to 40 GHz		_____	–130 dBm	+1.24/–1.37 dB
Option 103:				
30 Hz (Option 006)		_____	–80 dBm	+1.24/–1.37 dB
1 kHz (Option 006)		_____	–95 dBm	+1.24/–1.37 dB
10 kHz		_____	–110 dBm	+1.24/–1.37 dB
100 kHz		_____	–110 dBm	+1.24/–1.37 dB
1 MHz to 10 MHz		_____	–130 dBm	+1.24/–1.37 dB
10 MHz to 2.9 GHz				
Serial Prefix <3641A		_____	–130 dBm	+1.24/–1.37 dB
Serial Prefix ≥3641A		_____	–135 dBm	+1.24/–1.37 dB
Option H13		_____	–135 dBm	+1.24/–1.37 dB
2.9 GHz to 6.46 GHz		_____	–137 dBm	+1.24/–1.37 dB
6.46 GHz to 13.2 GHz		_____	–133 dBm	+1.24/–1.37 dB
13.2 GHz to 22.0 GHz		_____	–130 dBm	+1.24/–1.37 dB
22.0 GHz to 26.8 GHz		_____	–126 dBm	+1.24/–1.37 dB
26.8 GHz to 31.15 GHz		_____	–129 dBm	+1.24/–1.37 dB
31.15 GHz to 40 GHz		_____	–120 dBm	+1.24/–1.37 dB
11. Resolution Bandwidth Switching and IF Alignment Uncertainty				
2 MHz RES BW	–0.5 dB	_____	+0.5 dB	±0.10 dB
1 MHz RES BW	–0.5 dB	_____	+0.5 dB	±0.10 dB
100 kHz RES BW	–0.5 dB	_____	+0.5 dB	±0.10 dB
30 kHz RES BW	–0.5 dB	_____	+0.5 dB	±0.10 dB

ManualsPlus.com

Table 15-4 Performance Test Record (4 of 27)

Agilent Technologies

Select model: 8564E ___ 8564EC ___ Report No. _____

Serial No. _____ Date _____

Test Description	Results			Measurement Uncertainty
	Minimum	Measured	Maximum	
11. Resolution Bandwidth Switching and IF Alignment Uncertainty (continued)				
10 kHz RES BW	–0.5 dB	_____	+0.5 dB	±0.10 dB
3 kHz RES BW	–0.5 dB	_____	+0.5 dB	±0.10 dB
1 kHz RES BW	–0.5 dB	_____	+0.5 dB	±0.10 dB
300 Hz RES BW	–1.0 dB	_____	+1.0 dB	±0.10 dB
100 Hz RES BW	–0.5 dB	_____	+0.5 dB	±0.10 dB
30 Hz RES BW	–0.5 dB	_____	+0.5 dB	±0.10 dB
10 Hz RES BW	–0.5 dB	_____	+0.5 dB	±0.10 dB
3 Hz RES BW*	–0.5 dB	_____	+0.5 dB	±0.10 dB
1 Hz RES BW*	–0.5 dB	_____	+0.5 dB	±0.10 dB
12. Resolution Bandwidth Accuracy and Selectivity				
3 dB Bandwidth Accuracy				
2 MHz RES BW	–25%	_____	+50%	±1.33%
1 MHz RES BW	–25%	_____	+25%	±1.33%
300 kHz RES BW	–10%	_____	+10%	±1.33%
100 kHz RES BW	–10%	_____	+10%	±1.33%
30 kHz RES BW	–10%	_____	+10%	±1.33%
10 kHz RES BW	–10%	_____	+10%	±1.33%
3 kHz RES BW	–10%	_____	+10%	±1.33%
1 kHz RES BW	–10%	_____	+10%	±1.33%
300 Hz RES BW	–10%	_____	+10%	±1.33%
Selectivity				
2 MHz RES BW		_____	15:1	±2.89%
1 MHz RES BW		_____	15:1	±2.89%
300 kHz RES BW		_____	15:1	±2.89%

* 3 Hz and 1 Hz RES BW not available with Option 103.

ManualsPlus.com

Table 15-5 Performance Test Record (5 of 27)

Agilent Technologies

Select model: 8564E ___ 8564EC ___ Report No. _____

Serial No. _____ Date _____

Test Description	Results			Measurement Uncertainty
	Minimum	Measured	Maximum	
12. Resolution Bandwidth Accuracy and Selectivity (continued)				
Selectivity (cont'd)				
100 kHz RES BW		_____	15:1	±2.89%
30 kHz RES BW		_____	15:1	±2.89%
10 kHz RES BW		_____	15:1	±2.89%
3 kHz RES BW		_____	15:1	±2.89%
1 kHz RES BW		_____	15:1	±2.89%
300 Hz RES BW		_____	15:1	±2.89%
14. Input Attenuator Switching Uncertainty				
Cumulative, 50 MHz				
20 dB ATTEN	–0.6 dB	_____	+0.6 dB	±0.12 dB
30 dB ATTEN	–1.2 dB	_____	+1.2 dB	±0.12 dB
40 dB ATTEN	–1.8 dB	_____	+1.8 dB	±0.12 dB
50 dB ATTEN	–1.8 dB	_____	+1.8 dB	±0.14 dB
60 dB ATTEN	–1.8 dB	_____	+1.8 dB	±0.14 dB
Incremental, 50 MHz				
20 dB ATTEN	–0.6 dB	_____	+0.6 dB	±0.12 dB
30 dB ATTEN	–0.6 dB	_____	+0.6 dB	±0.12 dB
40 dB ATTEN	–0.6 dB	_____	+0.6 dB	±0.12 dB
50 dB ATTEN	–0.6 dB	_____	+0.6 dB	±0.14 dB
60 dB ATTEN	–0.6 dB	_____	+0.6 dB	±0.14 dB
Cumulative, 2.9 GHz				
20 dB ATTEN	–0.6 dB	_____	+0.6 dB	±0.23 dB
30 dB ATTEN	–1.2 dB	_____	+1.2 dB	±0.23 dB

ManualsPlus.com

Table 15-6 Performance Test Record (6 of 27)

Agilent Technologies

Select model: 8564E ___ 8564EC ___ Report No. _____

Serial No. _____ Date _____

Test Description	Results			Measurement Uncertainty
	Minimum	Measured	Maximum	
14. Input Attenuator Switching Uncertainty (continued)				
Cumulative, 2.9 GHz (cont'd)				
40 dB ATTEN	–1.8 dB	_____	+1.8 dB	±0.23 dB
50 dB ATTEN	–1.8 dB	_____	+1.8 dB	±0.23 dB
60 dB ATTEN	–1.8 dB	_____	+1.8 dB	+0.24/–0.25 dB
Incremental, 2.9 GHz				
20 dB ATTEN	–0.6 dB	_____	+0.6 dB	±0.23 dB
30 dB ATTEN	–0.6 dB	_____	+0.6 dB	±0.23 dB
40 dB ATTEN	–0.6 dB	_____	+0.6 dB	±0.23 dB
50 dB ATTEN	–0.6 dB	_____	+0.6 dB	±0.23 dB
60 dB ATTEN	–0.6 dB	_____	+0.6 dB	+0.24/–0.25 dB
15. IF Gain Uncertainty				
LOG, 10 dB steps				
–10 dBm REF LVL	–1.0 dB	_____	+1.0 dB	±0.11 dB
–20 dBm REF LVL	–1.0 dB	_____	+1.0 dB	±0.11 dB
–30 dBm REF LVL	–1.0 dB	_____	+1.0 dB	±0.11 dB
–40 dBm REF LVL	–1.0 dB	_____	+1.0 dB	±0.11 dB
–50 dBm REF LVL	–1.0 dB	_____	+1.0 dB	±0.11 dB
–60 dBm REF LVL	–1.0 dB	_____	+1.0 dB	±0.12 dB
–70 dBm REF LVL	–1.0 dB	_____	+1.0 dB	±0.12 dB
–80 dBm REF LVL	–1.0 dB	_____	+1.0 dB	±0.12 dB
LOG, 1 dB steps				
–1 dBm REF LVL	–1.0 dB	_____	+1.0 dB	±0.11 dB
–2 dBm REF LVL	–1.0 dB	_____	+1.0 dB	±0.11 dB
–3 dBm REF LVL	–1.0 dB	_____	+1.0 dB	±0.11 dB

ManualsPlus.com

Table 15-7 Performance Test Record (7 of 27)

Agilent Technologies

Select model: 8564E ___ 8564EC ___ Report No. _____

Serial No. _____ Date _____

Test Description	Results			Measurement Uncertainty
	Minimum	Measured	Maximum	
15. IF Gain Uncertainty (continued)				
LOG, 1 dB steps (cont'd)				
–4 dBm REF LVL	–1.0 dB	_____	+1.0 dB	±0.11 dB
–5 dBm REF LVL	–1.0 dB	_____	+1.0 dB	±0.11 dB
–6 dBm REF LVL	–1.0 dB	_____	+1.0 dB	±0.11 dB
–7 dBm REF LVL	–1.0 dB	_____	+1.0 dB	±0.11 dB
–8 dBm REF LVL	–1.0 dB	_____	+1.0 dB	±0.11 dB
–9 dBm REF LVL	–1.0 dB	_____	+1.0 dB	±0.11 dB
–10 dBm REF LVL	–1.0 dB	_____	+1.0 dB	±0.11 dB
–11 dBm REF LVL	–1.0 dB	_____	+1.0 dB	±0.11 dB
–12 dBm REF LVL	–1.0 dB	_____	+1.0 dB	±0.11 dB
LINEAR, 10 dB steps				
–10 dBm REF LVL	–1.0 dB	_____	+1.0 dB	±0.11 dB
–20 dBm REF LVL	–1.0 dB	_____	+1.0 dB	±0.11 dB
–30 dBm REF LVL	–1.0 dB	_____	+1.0 dB	±0.11 dB
–40 dBm REF LVL	–1.0 dB	_____	+1.0 dB	±0.11 dB
–50 dBm REF LVL	–1.0 dB	_____	+1.0 dB	±0.11 dB
–60 dBm REF LVL	–1.0 dB	_____	+1.0 dB	±0.12 dB
–70 dBm REF LVL	–1.0 dB	_____	+1.0 dB	±0.12 dB
–80 dBm REF LVL	–1.0 dB	_____	+1.0 dB	±0.12 dB
16. Scale Fidelity				
Cumulative, 10 dB/Div,				
RES BW ≥300 Hz				
–6 dB from REF LVL	–0.60 dB	_____	+0.60 dB	±0.24 dB
–12 dB from REF LVL	–0.85 dB	_____	+0.85 dB	±0.24 dB
–18 dB from REF LVL	–0.85 dB	_____	+0.85 dB	±0.24 dB

ManualsPlus.com

Table 15-8 Performance Test Record (8 of 27)

Agilent Technologies

Select model: 8564E ___ 8564EC ___ Report No. _____

Serial No. _____ Date _____

Test Description	Results			Measurement Uncertainty
	Minimum	Measured	Maximum	
16. Scale Fidelity (continued)				
Cumulative, 10 dB/Div, (cont'd)				
RES BW ≥300 Hz (cont'd)				
–24 dB from REF LVL	–0.85 dB	_____	+0.85 dB	±0.24 dB
–30 dB from REF LVL	–0.85 dB	_____	+0.85 dB	±0.24 dB
–36 dB from REF LVL	–0.85 dB	_____	+0.85 dB	±0.24 dB
–42 dB from REF LVL	–0.85 dB	_____	+0.85 dB	±0.24 dB
–48 dB from REF LVL	–0.85 dB	_____	+0.85 dB	±0.24 dB
–54 dB from REF LVL	–0.85 dB	_____	+0.85 dB	±0.24 dB
–60 dB from REF LVL	–0.85 dB	_____	+0.85 dB	+0.25/–0.26 dB
–66 dB from REF LVL	–0.85 dB	_____	+0.85 dB	+0.25/–0.26 dB
–72 dB from REF LVL	–0.85 dB	_____	+0.85 dB	+0.25/–0.26 dB
–78 dB from REF LVL	–0.85 dB	_____	+0.85 dB	+0.25/–0.26 dB
–84 dB from REF LVL	–0.85 dB	_____	+0.85 dB	+0.25/–0.26 dB
–90 dB from REF LVL	–0.85 dB	_____	+0.85 dB	+0.25/–0.26 dB
Incremental, 10 dB/Div,				
RES BW ≥300 Hz				
–12 dB from REF LVL	–0.10 dB	_____	+0.10 dB	±0.04 dB
–18 dB from REF LVL	–0.10 dB	_____	+0.10 dB	±0.04 dB
–24 dB from REF LVL	–0.10 dB	_____	+0.10 dB	±0.04 dB
–30 dB from REF LVL	–0.10 dB	_____	+0.10 dB	±0.04 dB
–36 dB from REF LVL	–0.10 dB	_____	+0.10 dB	±0.04 dB
–42 dB from REF LVL	–0.10 dB	_____	+0.10 dB	±0.04 dB
–48 dB from REF LVL	–0.10 dB	_____	+0.10 dB	±0.04 dB
–54 dB from REF LVL	–0.10 dB	_____	+0.10 dB	±0.04 dB
–60 dB from REF LVL	–0.10 dB	_____	+0.10 dB	±0.04 dB
–66 dB from REF LVL	–0.10 dB	_____	+0.10 dB	±0.04 dB
–72 dB from REF LVL	–0.10 dB	_____	+0.10 dB	±0.05 dB

ManualsPlus.com

Table 15-9 Performance Test Record (9 of 27)

Agilent Technologies

Select model: 8564E ___ 8564EC ___ Report No. _____

Serial No. _____ Date _____

Test Description	Results			Measurement Uncertainty
	Minimum	Measured	Maximum	
16. Scale Fidelity (continued)				
Incremental, 10 dB/Div,				
RES BW ≥300 Hz (cont'd)				
–78 dB from REF LVL	–0.10 dB	_____	+0.10 dB	±0.05 dB
–84 dB from REF LVL	–0.10 dB	_____	+0.10 dB	±0.05 dB
–90 dB from REF LVL	–0.10 dB	_____	+0.10 dB	±0.05 dB
Cumulative, 10 dB/Div,				
RES BW ≤100 Hz				
–6 dB from REF LVL	–0.60 dB	_____	+0.60 dB	±0.24 dB
–12 dB from REF LVL	–0.85 dB	_____	+0.85 dB	±0.24 dB
–18 dB from REF LVL	–0.85 dB	_____	+0.85 dB	±0.24 dB
–24 dB from REF LVL	–0.85 dB	_____	+0.85 dB	±0.24 dB
–30 dB from REF LVL	–0.85 dB	_____	+0.85 dB	±0.24 dB
–36 dB from REF LVL	–0.85 dB	_____	+0.85 dB	±0.24 dB
–42 dB from REF LVL	–0.85 dB	_____	+0.85 dB	±0.24 dB
–48 dB from REF LVL	–0.85 dB	_____	+0.85 dB	±0.24 dB
–54 dB from REF LVL	–0.85 dB	_____	+0.85 dB	±0.24 dB
–60 dB from REF LVL	–0.85 dB	_____	+0.85 dB	+0.25/–0.26 dB
–66 dB from REF LVL	–0.85 dB	_____	+0.85 dB	+0.25/–0.26 dB
–72 dB from REF LVL	–0.85 dB	_____	+0.85 dB	+0.25/–0.26 dB
–78 dB from REF LVL	–0.85 dB	_____	+0.85 dB	+0.25/–0.26 dB
–84 dB from REF LVL	–0.85 dB	_____	+0.85 dB	+0.25/–0.26 dB
–90 dB from REF LVL	–0.85 dB	_____	+0.85 dB	+0.25/–0.26 dB
–94 dB from REF LVL	–1.50 dB	_____	+1.50 dB	+0.25/–0.26 dB
–98 dB from REF LVL	–1.50 dB	_____	+1.50 dB	+0.25/–0.26 dB

ManualsPlus.com

Table 15-10 Performance Test Record (10 of 27)

Agilent Technologies

Select model: 8564E ___ 8564EC ___ Report No. _____

Serial No. _____ Date _____

Test Description	Results			Measurement Uncertainty
	Minimum	Measured	Maximum	
16. Scale Fidelity (continued)				
Incremental, 10 dB/Div,				
RES BW ≤100 Hz				
–12 dB from REF LVL	–0.20 dB	_____	+0.20 dB	±0.04 dB
–18 dB from REF LVL	–0.20 dB	_____	+0.20 dB	±0.04 dB
–24 dB from REF LVL	–0.20 dB	_____	+0.20 dB	±0.04 dB
–30 dB from REF LVL	–0.20 dB	_____	+0.20 dB	±0.04 dB
–36 dB from REF LVL	–0.20 dB	_____	+0.20 dB	±0.04 dB
–42 dB from REF LVL	–0.20 dB	_____	+0.20 dB	±0.04 dB
–48 dB from REF LVL	–0.20 dB	_____	+0.20 dB	±0.04 dB
–54 dB from REF LVL	–0.20 dB	_____	+0.20 dB	±0.04 dB
–60 dB from REF LVL	–0.20 dB	_____	+0.20 dB	±0.04 dB
–66 dB from REF LVL	–0.20 dB	_____	+0.20 dB	±0.04 dB
–72 dB from REF LVL	–0.20 dB	_____	+0.20 dB	±0.05 dB
–78 dB from REF LVL	–0.20 dB	_____	+0.20 dB	±0.05 dB
–84 dB from REF LVL	–0.20 dB	_____	+0.20 dB	±0.05 dB
–90 dB from REF LVL	–0.20 dB	_____	+0.20 dB	±0.05 dB
Cumulative, 2 dB/Div				
–2 dB from REF LVL	–0.20 dB	_____	+0.20 dB	±0.053 dB
–4 dB from REF LVL	–0.40 dB	_____	+0.40 dB	±0.053 dB
–6 dB from REF LVL	–0.60 dB	_____	+0.60 dB	±0.053 dB
–8 dB from REF LVL	–0.80 dB	_____	+0.80 dB	±0.053 dB
–10 dB from REF LVL	–0.85 dB	_____	+0.85 dB	±0.053 dB
–12 dB from REF LVL	–0.85 dB	_____	+0.85 dB	±0.053 dB
–14 dB from REF LVL	–0.85 dB	_____	+0.85 dB	±0.053 dB
–16 dB from REF LVL	–0.85 dB	_____	+0.85 dB	±0.053 dB
–18 dB from REF LVL	–0.85 dB	_____	+0.85 dB	±0.053 dB

ManualsPlus.com

Table 15-11 Performance Test Record (11 of 27)

Agilent Technologies

Select model: 8564E ___ 8564EC ___ Report No. _____

Serial No. _____ Date _____

Test Description	Results			Measurement Uncertainty
	Minimum	Measured	Maximum	
16. Scale Fidelity (continued)				
Incremental, 2 dB/Div				
–2 dB from REF LVL	–0.10 dB	_____	+0.10 dB	±0.04 dB
–4 dB from REF LVL	–0.10 dB	_____	+0.10 dB	±0.04 dB
–6 dB from REF LVL	–0.10 dB	_____	+0.10 dB	±0.04 dB
–8 dB from REF LVL	–0.10 dB	_____	+0.10 dB	±0.04 dB
–10 dB from REF LVL	–0.10 dB	_____	+0.10 dB	±0.04 dB
–12 dB from REF LVL	–0.10 dB	_____	+0.10 dB	±0.04 dB
–14 dB from REF LVL	–0.10 dB	_____	+0.10 dB	±0.04 dB
–16 dB from REF LVL	–0.10 dB	_____	+0.10 dB	±0.04 dB
–18 dB from REF LVL	–0.10 dB	_____	+0.10 dB	±0.04 dB
Linear				
–2 dB from REF LVL	–2.33 dB	_____	–1.68 dB	±0.04 dB
–4 dB from REF LVL	–4.42 dB	_____	–3.60 dB	±0.04 dB
–6 dB from REF LVL	–6.54 dB	_____	–5.50 dB	±0.04 dB
–8 dB from REF LVL	–8.68 dB	_____	–7.37 dB	±0.04 dB
–10 dB from REF LVL	–10.87 dB	_____	–9.21 dB	±0.04 dB
–12 dB from REF LVL	–13.10 dB	_____	–11.02 dB	±0.04 dB
–14 dB from REF LVL	–15.42 dB	_____	–12.78 dB	±0.04 dB
–16 dB from REF LVL	–17.82 dB	_____	–14.49 dB	±0.04 dB
–18 dB from REF LVL	–20.36 dB	_____	–16.14 dB	±0.04 dB
17. Residual FM				
Non-Option 103		_____	1 Hz	±0.2 Hz
Option 103		_____	10 Hz	±0.8 Hz

ManualsPlus.com

Table 15-12 Performance Test Record (12 of 27)

Agilent Technologies

Select model: 8564E ___ 8564EC ___ Report No. _____

Serial No. _____ Date _____

Test Description	Results			Measurement Uncertainty
	Minimum	Measured	Maximum	
19. Noise Sidebands				
Non-Option 103				
+100 Hz offset (serial prefix <3510A)		_____	–80 dBc/Hz	+1.22/–1.34 dB
+100 Hz offset (serial prefix ≥3510A)		_____	–88 dBc/Hz	+1.22/–1.34 dB
–100 Hz offset (serial prefix <3510A)		_____	–80 dBc/Hz	+1.22/–1.34 dB
–100 Hz offset (serial prefix ≥3510A)		_____	–88 dBc/Hz	+1.22/–1.34 dB
+1 kHz offset		_____	–97 dBc/Hz	+1.22/–1.34 dB
–1 kHz offset		_____	–97 dBc/Hz	+1.22/–1.34 dB
+10 kHz offset		_____	–113 dBc/Hz	+1.22/–1.34 dB
–10 kHz offset		_____	–113 dBc/Hz	+1.22/–1.34 dB
+30 kHz offset		_____	N/A*	+1.22/–1.34 dB
–30 kHz offset		_____	N/A*	+1.22/–1.34 dB
+100 kHz offset (serial prefix <3510A)		_____	–116 dBc/Hz	+1.22/–1.34 dB
+100 kHz offset (serial prefix ≥3510A)		_____	–117 dBc/Hz	+1.22/–1.34 dB
–100 kHz offset (serial prefix <3510A)		_____	–116 dBc/Hz	+1.22/–1.34 dB
–100 kHz offset (serial prefix ≥3510A)		_____	–117 dBc/Hz	+1.22/–1.34 dB
Option 103				
+100 Hz offset		_____	–70 dBc/Hz	+1.22/–1.34 dB
–100 Hz offset		_____	–70 dBc/Hz	+1.22/–1.34 dB
+1 kHz offset		_____	–90 dBc/Hz	+1.22/–1.34 dB
–1 kHz offset		_____	–90 dBc/Hz	+1.22/–1.34 dB
+10 kHz offset		_____	–113 dBc/Hz	+1.22/–1.34 dB

* Noise sidebands are not specified at ±30 kHz offset; measurement is for characterization only.

ManualsPlus.com

Table 15-13 Performance Test Record (13 of 27)

Agilent Technologies

Select model: 8564E ___ 8564EC ___ Report No. _____

Serial No. _____ Date _____

Test Description	Results			Measurement Uncertainty
	Minimum	Measured	Maximum	
19. Noise Sidebands (continued)				
Option 103 (cont'd)				
–10 kHz offset		_____	–113 dBc/Hz	+1.22/–1.34 dB
+30 kHz offset		_____	N/A*	+1.22/–1.34 dB
–30 kHz offset		_____	N/A*	+1.22/–1.34 dB
+100 kHz offset (serial prefix <3510A)		_____	–116 dBc/Hz	+1.22/–1.34 dB
+100 kHz offset (serial prefix ≥3510A)		_____	–117 dBc/Hz	+1.22/–1.34 dB
–100 kHz offset (serial prefix <3510A)		_____	–116 dBc/Hz	+1.22/–1.34 dB
–100 kHz offset (serial prefix ≥3510A)		_____	–117 dBc/Hz	+1.22/–1.34 dB
24. Image, Multiple, and Out-of-Range Responses				
2 GHz CENTER FREQ				
2021.4 MHz		_____	–80 dBc	+0.8/–1.0 dB
2621.4 MHz		_____	–80 dBc	+0.8/–1.0 dB
2321.4 MHz		_____	–80 dBc	+0.8/–1.0 dB
2600.0 MHz		_____	–80 dBc	+0.8/–1.0 dB
7910.7 MHz		_____	–80 dBc	+0.8/–1.0 dB
9821.4 MHz		_____	–80 dBc	+0.8/–1.0 dB
4 GHz CENTER FREQ				
4021.4 MHz		_____	–80 dBc	+0.8/–1.0 dB
4621.4 MHz		_____	–80 dBc	+0.8/–1.0 dB
4321.4 MHz		_____	–80 dBc	+0.8/–1.0 dB
4600.0 MHz		_____	–80 dBc	+0.8/–1.0 dB

* Noise sidebands are not specified at ±30 kHz offset; measurement is for characterization only.

ManualsPlus.com

Table 15-14 Performance Test Record (14 of 27)

Agilent Technologies

Select model: 8564E ___ 8564EC ___ Report No. _____

Serial No. _____ Date _____

Test Description	Results			Measurement Uncertainty
	Minimum	Measured	Maximum	
24. Image, Multiple, and Out-of-Range Responses (continued)				
4 GHz CENTER FREQ (cont'd)				
8310.7 MHz		_____	–80 dBc	+0.8/–1.0 dB
8932.1 MHz		_____	–80 dBc	+0.8/–1.0 dB
9 GHz CENTER FREQ				
9021.4 MHz		_____	–80 dBc	+0.8/–1.0 dB
9621.4 MHz		_____	–80 dBc	+0.8/–1.0 dB
9321.4 MHz		_____	–80 dBc	+0.8/–1.0 dB
9600.0 MHz		_____	–80 dBc	+0.8/–1.0 dB
18310.7 MHz		_____	–80 dBc	+0.8/–1.0 dB
18932.1 MHz		_____	–80 dBc	+0.8/–1.0 dB
15 GHz CENTER FREQ				
15021.400 MHz		_____	–80 dBc	+0.9/–1.1 dB
15621.400 MHz		_____	–80 dBc	+0.9/–1.1 dB
22655.350 MHz		_____	–80 dBc	+0.9/–1.1 dB
23276.750 MHz		_____	–80 dBc	+0.9/–1.1 dB
7344.650 MHz		_____	–80 dBc	+0.9/–1.1 dB
7966.050 MHz		_____	–80 dBc	+0.9/–1.1 dB
20 GHz CENTER FREQ				
20021.400 MHz		_____	–80 dBc	+0.9/–1.1 dB
20621.400 MHz		_____	–80 dBc	+0.9/–1.1 dB
15543.725 MHz		_____	–80 dBc	+0.9/–1.1 dB
25699.075 MHz		_____	–80 dBc	+0.9/–1.1 dB
9844.650 MHz		_____	–80 dBc	+0.9/–1.1 dB
10466.050 MHz		_____	–80 dBc	+0.9/–1.1 dB

ManualsPlus.com

Table 15-15 Performance Test Record (15 of 27)

Agilent Technologies

Select model: 8564E ___ 8564EC ___ Report No. _____

Serial No. _____ Date _____

Test Description	Results			Measurement Uncertainty
	Minimum	Measured	Maximum	
24. Image, Multiple, and Out-of-Range Responses (continued)				
29 GHz CENTER FREQ				
28378.600 MHz		_____	–60 dBc	+0.88/–0.96 dB
28978.600 MHz		_____	–60 dBc	+0.88/–0.96 dB
24450.925 MHz		_____	–55 dBc	+0.88/–0.96 dB
28700.000 MHz		_____	–55 dBc	+0.88/–0.96 dB
16455.350 MHz		_____	–55 dBc	+0.88/–0.96 dB
35272.325 MHz		_____	–55 dBc	+0.88/–0.96 dB
35 GHz CENTER FREQ				
35021.400 MHz		_____	–60 dBc	+0.88/–0.96 dB
35621.400 MHz		_____	–60 dBc	+0.88/–0.96 dB
33093.725 MHz		_____	–55 dBc	+0.88/–0.96 dB
35321.400 MHz		_____	–55 dBc	+0.88/–0.96 dB
8744.538 MHz		_____	–55 dBc	+0.88/–0.96 dB
15544.650 MHz		_____	–55 dBc	+0.88/–0.96 dB
30. Frequency Readout Accuracy and Frequency Count Marker Accuracy				
Frequency Readout Accuracy:				
1.5 GHz CENTER FREQ				
1 MHz SPAN	1.499988GHz	_____	1.500012GHz	±1 Hz
10 MHz SPAN	1.49948 GHz	_____	1.50052 GHz	±1 Hz
20 MHz SPAN	1.49895 GHz	_____	1.50105 GHz	±1 Hz
50 MHz SPAN	1.49745 GHz	_____	1.50255 GHz	±1 Hz
100 MHz SPAN	1.4948 GHz	_____	1.5052 GHz	±1 Hz
1 GHz SPAN	1.450 GHz	_____	1.550 GHz	±1 Hz

ManualsPlus.com

Table 15-16 Performance Test Record (16 of 27)

Agilent Technologies

Select model: 8564E ___ 8564EC ___ Report No. _____

Serial No. _____ Date _____

Test Description	Results			Measurement Uncertainty
	Minimum	Measured	Maximum	
30. Frequency Readout Accuracy and Frequency Count Marker Accuracy (continued)				
Frequency Readout Accuracy: (cont'd)				
4.0 GHz CENTER FREQ				
1 MHz SPAN	3.999988GHz	_____	4.000012GHz	±1 Hz
10 MHz SPAN	3.99948 GHz	_____	4.00052 GHz	±1 Hz
20 MHz SPAN	3.99895 GHz	_____	4.00105 GHz	±1 Hz
50 MHz SPAN	3.99745 GHz	_____	4.00255 GHz	±1 Hz
100 MHz SPAN	3.9948 GHz	_____	4.0052 GHz	±1 Hz
1 GHz SPAN	3.950 GHz	_____	4.050 GHz	±1 Hz
9.0 GHz CENTER FREQ				
1 MHz SPAN	8.999988GHz	_____	9.000012GHz	±2 Hz
10 MHz SPAN	8.99948 GHz	_____	9.00052 GHz	±2 Hz
20 MHz SPAN	8.99895 GHz	_____	9.00105 GHz	±2 Hz
50 MHz SPAN	8.99745 GHz	_____	9.00255 GHz	±2 Hz
100 MHz SPAN	8.9948 GHz	_____	9.0052 GHz	±2 Hz
1 GHz SPAN	8.950 GHz	_____	9.050 GHz	±2 Hz
16.0 GHz CENTER FREQ				
1 MHz SPAN	15.999988GHz	_____	16.000012GHz	±3 Hz
10 MHz SPAN	15.99948 GHz	_____	16.00052 GHz	±3 Hz
20 MHz SPAN	15.99895 GHz	_____	16.00105 GHz	±3 Hz
50 MHz SPAN	15.99745 GHz	_____	16.00255 GHz	±3 Hz
100 MHz SPAN	15.9948 GHz	_____	16.0052 GHz	±3 Hz
1 GHz SPAN	15.950 GHz	_____	16.050 GHz	±3 Hz

ManualsPlus.com

Table 15-17 Performance Test Record (17 of 27)

Agilent Technologies

Select model: 8564E ___ 8564EC ___ Report No. _____

Serial No. _____ Date _____

Test Description	Results			Measurement Uncertainty
	Minimum	Measured	Maximum	
30. Frequency Readout Accuracy and Frequency Count Marker Accuracy (continued)				
Frequency Readout Accuracy: (cont'd)				
21.0 GHz CENTER FREQ				
1 MHz SPAN	20.999988GHz	_____	21.000012GHz	±4 Hz
10 MHz SPAN	20.99948 GHz	_____	21.00052 GHz	±4 Hz
20 MHz SPAN	20.99895 GHz	_____	21.00105 GHz	±4 Hz
50 MHz SPAN	20.99745 GHz	_____	21.00255 GHz	±4 Hz
100 MHz SPAN	20.9948 GHz	_____	21.0052 GHz	±4 Hz
1 GHz SPAN	20.950 GHz	_____	21.050 GHz	±4 Hz
29.0 GHz CENTER FREQ				
1 MHz SPAN	28.999988GHz	_____	29.000012GHz	±6 Hz
10 MHz SPAN	28.99948 GHz	_____	29.00052 GHz	±6 Hz
20 MHz SPAN	28.99895 GHz	_____	29.00105 GHz	±6 Hz
50 MHz SPAN	28.99745 GHz	_____	29.00255 GHz	±6 Hz
100 MHz SPAN	28.9948 GHz	_____	29.0052 GHz	±6 Hz
1 GHz SPAN	28.950 GHz	_____	29.050 GHz	±6 Hz
35.0 GHz CENTER FREQ				
1 MHz SPAN	34.999988GHz		35.000012 GHz	±6 Hz
10 MHz SPAN	34.99948 GHz		35.00052 GHz	±6 Hz
20 MHz SPAN	34.99895 GHz	_____	35.00105 GHz	±6 Hz
50 MHz SPAN	34.99745 GHz	_____	35.00255 GHz	±6 Hz
100 MHz SPAN	34.9948 GHz	_____	35.0052 GHz	±6 Hz
1 GHz SPAN	34.950 GHz	_____	35.050 GHz	±6 Hz

ManualsPlus.com

Table 15-18 Performance Test Record (18 of 27)

Agilent Technologies

Select model: 8564E ___ 8564EC ___ Report No. _____

Serial No. _____ Date _____

Test Description	Results			Measurement Uncertainty
	Minimum	Measured	Maximum	
30. Frequency Readout Accuracy and Frequency Count Marker Accuracy (continued)				
Frequency Count Marker Accuracy:				
1.5 GHz CENTER FREQ	1.499999997 GHz	_____	1.500000003 GHz	±1 Hz
4.0 GHz CENTER FREQ	3.999999997 GHz	_____	4.000000003 GHz	±1 Hz
9.0 GHz CENTER FREQ	8.999999995 GHz	_____	9.000000005 GHz	±2 Hz
16.0 GHz CENTER FREQ	15.999999991 GHz	_____	16.000000009 GHz	±3 Hz
21.0 GHz CENTER FREQ	20.999999991 GHz	_____	21.000000009 GHz	±4 Hz
29.0 GHz CENTER FREQ	29.999999991 GHz	_____	30.000000009 GHz	±6 Hz
35.0 GHz CENTER FREQ	34.999999983 GHz	_____	35.000000017 GHz	±6 Hz
32. Pulse Digitization Uncertainty				
LOG 5dB/Div				
1 MHz RES BW		_____	1.25 dB	±0.15 dB
2 MHz RES BW		_____	3.0 dB	+0.43/–0.44 dB
LINEAR				
1 MHz RES BW		_____	4%	±0.31%
2 MHz RES BW		_____	12%	±0.65%

ManualsPlus.com

Table 15-19 Performance Test Record (19 of 27)

Agilent Technologies

Select model: 8564E ___ 8564EC ___ Report No. _____

Serial No. _____ Date _____

Test Description	Results			Measurement Uncertainty
	Minimum	Measured	Maximum	
35. Second Harmonic Distortion (SHD)				
SHD (< 1.45 GHz)				
Serial Prefix <3641A		_____	–72 dBc	+1.87/–2.28 dB
Serial Prefix ≥3641A		_____	–79 dBc	+1.87/–2.28 dB
Option H13		_____	–79 dBc	+1.87/–2.28 dB
SHD (1.5 GHz)		_____	–85 dBc	+2.32/–2.66 dB
SHD (> 2.0 GHz)		_____	–100 dBc	+2.32/–2.66 dB
40. Frequency Response				
(Enter data for either the –10 °C to 55 °C or 20 °C to 30 °C temperature range)				
–10 °C to 55 °C				
Band 0				
Maximum Positive Response		_____	+1.5 dB	+0.37/–0.41 dB
Maximum Negative Response	–1.5 dB	_____		+0.37/–0.41 dB
Peak-to-Peak Response		_____	2.0 dB	+0.37/–0.41 dB
Band 1				
Maximum Positive Response		_____	+2.6 dB	+0.49/–0.55 dB
Maximum Negative Response	–2.6 dB	_____		+0.49/–0.55 dB
Peak-to-Peak Response		_____	3.4 dB	+0.49/–0.55 dB
Band 2				
Maximum Positive Response		_____	+3.0 dB	+0.49/–0.56 dB
Maximum Negative Response	–3.0 dB	_____		+0.49/–0.56 dB
Peak-to-Peak Response		_____	5.2 dB	+0.49/–0.56 dB

ManualsPlus.com

Table 15-20 Performance Test Record (20 of 27)

Agilent Technologies

Select model: 8564E ___ 8564EC ___ Report No. _____

Serial No. _____ Date _____

Test Description	Results			Measurement Uncertainty
	Minimum	Measured	Maximum	
40. Frequency Response (continued)				
–10 °C to 55 °C (cont'd)				
Band 3, < 22 GHz				
Maximum Positive Response		_____	+4.0 dB	+0.53/–0.60 dB
Maximum Negative Response	–4.0 dB	_____		+0.53/–0.60 dB
Peak-to-Peak Response		_____	5.0 dB	+0.53/–0.60 dB
Band 3, > 22 GHz				
Maximum Positive Response		_____	+4.5 dB	+0.53/–0.60 dB
Maximum Negative Response	–4.5 dB	_____		+0.53/–0.60 dB
Peak-to-Peak Response		_____	6.6 dB	+0.53/–0.60 dB
Band 4				
Maximum Positive Response		_____	+4.0 dB	+0.74/–0.89 dB
Maximum Negative Response	–4.0 dB	_____		+0.74/–0.89 dB
Peak-to-Peak Response		_____	6.2 dB	+0.74/–0.89 dB
Band 5				
Maximum Positive Response		_____	+4.0 dB	+0.74/–0.89 dB
Maximum Negative Response	–4.0 dB	_____		+0.74/–0.89 dB
Peak-to-Peak Response		_____	5.2 dB	+0.74/–0.89 dB
Band 0, 100 MHz to 2.0 GHz (serial prefix ≥3641A)				
Peak-to-Peak Response		_____	1.8 dB	+0.37/–0.41 dB

ManualsPlus.com

Table 15-21 Performance Test Record (21 of 27)

Agilent Technologies

Select model: 8564E ___ 8564EC ___ Report No. _____

Serial No. _____ Date _____

Test Description	Results			Measurement Uncertainty
	Minimum	Measured	Maximum	
40. Frequency Response (continued)				
–10 °C to 55 °C (cont'd)				
Band Switching Uncertainty:				
Band 0 to Band 1		_____	3.7 dB	+0.86/–0.96 dB
Band 0 to Band 2		_____	4.6 dB	+0.86/–0.97 dB
Band 0 to Band 3, <22GHz		_____	4.5 dB	+0.90/–1.01 dB
Band 0 to Band 3, >22GHz		_____	5.3 dB	+0.90/–1.01 dB
Band 0 to Band 4		_____	5.1 dB	+1.11/–1.30 dB
Band 0 to Band 5		_____	4.6 dB	+1.11/–1.30 dB
Band 1 to Band 2		_____	5.3 dB	+0.98/–1.11 dB
Band 1 to Band 3, <22GHz		_____	5.2 dB	+1.02/–1.15 dB
Band 1 to Band 3, >22GHz		_____	6.0 dB	+1.02/–1.15dB
Band 1 to Band 4		_____	5.8 dB	+1.23/–1.44 dB
Band 1 to Band 5		_____	5.3 dB	+1.23/–1.44 dB
Band 2 to Band 3, <22GHz		_____	6.1 dB	+1.02/–1.16 dB
Band 2 to Band 3, >22GHz		_____	6.9 dB	+1.02/–1.16 dB
Band 2 to Band 4		_____	6.7 dB	+1.23/–1.45 dB
Band 2 to Band 5		_____	6.2 dB	+1.23/–1.45 dB
Band 3, <22 GHz to Band 3, >22 GHz		_____	6.8 dB	+1.06/–1.20 dB
Band 3, <22 GHz to Band 4		_____	6.6 dB	+1.27/–1.49 dB
Band 3, <22 GHz to Band 5		_____	6.1 dB	+1.27/–1.49 dB
Band 3, >22 GHz to Band 4		_____	7.4 dB	+1.27/–1.49 dB
Band 3, >22 GHz to Band 5		_____	6.9 dB	+1.27/–1.49 dB
Band 4 to Band 5		_____	6.7 dB	+1.48/–1.78 dB

ManualsPlus.com

Table 15-22 Performance Test Record (22 of 27)

Agilent Technologies

Select model: 8564E ___ 8564EC ___ Report No. _____

Serial No. _____ Date _____

Test Description	Results			Measurement Uncertainty
	Minimum	Measured	Maximum	
40. Frequency Response (continued)				
–20 °C to 30 °C				
Band 0				
Maximum Positive Response		_____	+1.0 dB	+0.37/–0.41 dB
Maximum Negative Response	–1.0 dB	_____		+0.37/–0.41 dB
Peak-to-Peak Response		_____	1.6 dB	+0.37/–0.41 dB
Band 1				
Maximum Positive Response		_____	+1.8 dB	+0.49/–0.55 dB
Maximum Negative Response	–1.8 dB	_____		+0.49/–0.55 dB
Peak-to-Peak Response		_____	2.8 dB	+0.49/–0.55 dB
Band 2				
Maximum Positive Response		_____	+2.8 dB	+0.49/–0.56 dB
Maximum Negative Response	–2.8 dB	_____		+0.49/–0.56 dB
Peak-to-Peak Response		_____	4.4 dB	+0.49/–0.56 dB
Band 3, < 22 GHz				
Maximum Positive Response		_____	+3.5 dB	+0.53/–0.60 dB
Maximum Negative Response	–3.5 dB	_____		+0.53/–0.60 dB
Peak-to-Peak Response		_____	5.0 dB	+0.53/–0.60 dB

ManualsPlus.com

Table 15-23 Performance Test Record (23 of 27)

Agilent Technologies

Select model: 8564E ___ 8564EC ___ Report No. _____

Serial No. _____ Date _____

Test Description	Results			Measurement Uncertainty
	Minimum	Measured	Maximum	
40. Frequency Response (continued)				
–20 °C to 30 °C (cont'd)				
Band 3, > 22 GHz				
Maximum Positive Response		_____	+4.0 dB	+0.53/–0.60 dB
Maximum Negative Response	–4.0 dB	_____		+0.53/–0.60 dB
Peak-to-Peak Response		_____	4.4 dB	+0.53/–0.60 dB
Band 4				
Maximum Positive Response		_____	+3.0 dB	+0.74/–0.89 dB
Maximum Negative Response	–3.0 dB	_____		+0.74/–0.89 dB
Peak-to-Peak Response		_____	5.8 dB	+0.74/–0.89 dB
Band 5				
Maximum Positive Response		_____	+3.2 dB	+0.74/–0.89 dB
Maximum Negative Response	–3.2 dB	_____		+0.74/–0.89 dB
Peak-to-Peak Response		_____	4.8 dB	+0.74/–0.89 dB
Band 0, 100 MHz to 2.0 GHz (serial prefix ≥3641A)				
Peak-to-Peak Response		_____	1.6 dB	+0.37/–0.41 dB
Band Switching Uncertainty:				
Band 0 to Band 1		_____	3.2 dB	+0.86/–0.96 dB
Band 0 to Band 2		_____	4.0 dB	+0.86/–0.97 dB
Band 0 to Band 3, <22GHz		_____	4.3 dB	+0.90/–1.01 dB
Band 0 to Band 3, >22GHz		_____	4.0 dB	+0.90/–1.01 dB
Band 0 to Band 4		_____	4.7 dB	+1.11/–1.30 dB

ManualsPlus.com

Table 15-24 Performance Test Record (24 of 27)

Agilent Technologies

Select model: 8564E ___ 8564EC ___ Report No. _____

Serial No. _____ Date _____

Test Description	Results			Measurement Uncertainty
	Minimum	Measured	Maximum	
40. Frequency Response (continued)				
–20 °C to 30 °C (cont'd)				
Band Switching Uncertainty: (cont'd)				
Band 0 to Band 5		_____	4.2 dB	+1.11/–1.30 dB
Band 1 to Band 2		_____	4.6 dB	+0.98/–1.11 dB
Band 1 to Band 3, <22GHz		_____	4.9 dB	+1.02/–1.15 dB
Band 1 to Band 3, >22GHz		_____	4.6 dB	+1.02/–1.15dB
Band 1 to Band 4		_____	5.3 dB	+1.23/–1.44 dB
Band 1 to Band 5		_____	4.8 dB	+1.23/–1.44 dB
Band 2 to Band 3, <22GHz		_____	5.7 dB	+1.02/–1.16 dB
Band 2 to Band 3, >22GHz		_____	5.4 dB	+1.02/–1.16 dB
Band 2 to Band 4		_____	6.1 dB	+1.23/–1.45 dB
Band 2 to Band 5		_____	5.6 dB	+1.23/–1.45 dB
Band 3, <22 GHz to Band 3, >22 GHz		_____	5.7 dB	+1.06/–1.20 dB
Band 3, <22 GHz to Band 4		_____	6.4 dB	+1.27/–1.49 dB
Band 3, <22 GHz to Band 5		_____	5.9 dB	+1.27/–1.49 dB
Band 3, >22 GHz to Band 4		_____	6.1 dB	+1.27/–1.49 dB
Band 3, >22 GHz to Band 5		_____	5.6 dB	+1.27/–1.49 dB
Band 4 to Band 5		_____	6.3 dB	+1.48/–1.78 dB
42. Frequency Span Accuracy				
1 kHz SPAN	–1%	_____	+1%	±0.24%
2 kHz SPAN	–1%	_____	+1%	±0.24%
5 kHz SPAN	–1%	_____	+1%	±0.24%
10 kHz SPAN	–1%	_____	+1%	±0.24%
20 kHz SPAN	–1%	_____	+1%	±0.24%
50 kHz SPAN	–1%	_____	+1%	±0.24%

ManualsPlus.com

Table 15-25 Performance Test Record (25 of 27)

Agilent Technologies

Select model: 8564E ___ 8564EC ___ Report No. _____

Serial No. _____ Date _____

Test Description	Results			Measurement Uncertainty
	Minimum	Measured	Maximum	
42. Frequency Span Accuracy (continued)				
100 kHz SPAN	–1 %	_____	+1 %	±0.24 %
200 kHz SPAN	–1 %	_____	+1 %	±0.24 %
500 kHz SPAN	–1 %	_____	+1 %	±0.24 %
1 MHz SPAN	–1 %	_____	+1 %	±0.24 %
2 MHz SPAN	–1 %	_____	+1 %	±0.24 %
5 MHz SPAN	–5 %	_____	+5 %	±0.24 %
10 MHz SPAN	–5 %	_____	+5 %	±0.24 %
20 MHz SPAN	–5 %	_____	+5 %	±0.24 %
50 MHz SPAN	–5 %	_____	+5 %	±0.24 %
100 MHz SPAN	–5 %	_____	+5 %	±0.24 %
200 MHz SPAN	–5 %	_____	+5 %	±0.24 %
500 MHz SPAN	–5 %	_____	+5 %	±0.24 %
46. Third Order Intermodulation Distortion				
TOI Distortion, 45 MHz				
Serial Prefix <3641A		_____	–78 dBc	+1.41/–1.43 dB
Serial Prefix ≥3641A		_____	–82 dBc	+1.41/–1.43 dB
Option H13		_____	–82 dBc	+1.41/–1.43 dB
TOI Distortion, 5 GHz		_____	–90 dBc	+2.04/–2.12 dB
TOI Distortion, 8 GHz		_____	–75 dBc	+2.04/–2.12 dB
50. Gain Compression				
Gain Compression, 2 GHz		_____	1 dB	±0.19 dB
Gain Compression, 4 GHz		_____	1 dB	±0.22 dB
Gain Compression, 7 GHz		_____	1 dB	±0.22 dB

ManualsPlus.com

Table 15-26 Performance Test Record (26 of 27)

Agilent Technologies

Select model: 8564E ___ 8564EC ___ Report No. _____

Serial No. _____ Date _____

Test Description	Results			Measurement Uncertainty
	Minimum	Measured	Maximum	
52. 1ST LO OUTPUT Amplitude				
Maximum 1ST LO OUTPUT AMPLITUDE		_____	+18.5 dBm	±0.18 dB
Minimum 1ST LO OUTPUT AMPLITUDE	+14.5 dBm	_____		±0.18 dB
53. Sweep Time Accuracy				
50 µs SWEEP TIME†	42.5 µs	_____	57.5 µs	±750 ns
100 µs SWEEP TIME†	85.0 µs	_____	115 µs	±1.5 µs
200 µs SWEEP TIME†	170 µs	_____	230 µs	±3.0 µs
500 µs SWEEP TIME†	425 µs	_____	575 µs	±7.5 µs
1 ms SWEEP TIME†	850 µs	_____	1.15 ms	±15 µs
2 ms SWEEP TIME†	1.70 ms	_____	2.30 ms	±30 µs
5 ms SWEEP TIME†	4.25 ms	_____	5.75 ms	±75 µs
10 ms SWEEP TIME†	8.50 ms	_____	11.5 ms	±150 µs
20 ms SWEEP TIME†	17.0 ms	_____	23.0 ms	±300 µs
30 ms SWEEP TIME	29.7 ms	_____	30.3 ms	±209 ns
50 ms SWEEP TIME	49.5 ms	_____	50.5 ms	±281 ns
100 ms SWEEP TIME	99.0 ms	_____	101.0 ms	±461 ns
200 ms SWEEP TIME	198.0 ms	_____	202.0 ms	±821 ns
500 ms SWEEP TIME	495.0 ms	_____	505.0 ms	±1.901 µs
1 s SWEEP TIME	990.0 ms	_____	1.010 s	±3.7 µs
2 s SWEEP TIME	1.980 s	_____	2.020 s	±7.3 µs
5 s SWEEP TIME	4.950 s	_____	5.050 s	±18.1 µs
10 s SWEEP TIME	9.900 s	_____	10.10 s	±36.1 µs

† These entries apply only to E-Series spectrum analyzers without Option 007.

ManualsPlus.com

Table 15-27 Performance Test Record (27 of 27)

Agilent Technologies

Select model: 8564E ___ 8564EC ___ Report No. _____

Serial No. _____ Date _____

Test Description	Results			Measurement Uncertainty
	Minimum	Measured	Maximum	
53. Sweep Time Accuracy (continued)				
20 s SWEEP TIME	19.80 s	_____	20.20 s	±72.1 µs
50 s SWEEP TIME	49.50 s	_____	50.50 s	±180.1 µs
100 s SWEEP TIME	99.00 s	_____	101.0 s	±360.1 µs
56. Residual Responses				
200 kHz to 2.9 GHz		_____	–90 dBm	+1.24/–1.37 dB
2.9 GHz to 6.5 GHz		_____	–90 dBm	+1.24/–1.37 dB
57. IF INPUT Amplitude Accuracy (Non-Option 327 only)				
IF INPUT Amplitude	–31.5 dBm	_____	–28.5 dBm	+0.40/–0.44 dB
58. Gate Delay Accuracy and Gate Length Accuracy				
MIN Gate Delay	2.0000 µs	_____	4.0000 µs	±21 ns
MAX Gate Delay	2.0000 µs	_____	4.0000 µs	±21 ns
1 µs Gate Length	0.0000 ns	_____	2.0000 µs	±11 ns
65 ms Gate Length	64.999 ms	_____	65.001 ms	±752 ns
59. Delayed Sweep Accuracy				
1000 µs	999 µs	_____	1001 µs	±114 ns
2000 µs	1999 µs	_____	2001 µs	±124 ns
5000 µs	4999 µs	_____	5001 µs	±154 ns
10000 µs	9999 µs	_____	10001 µs	±204 ns
20000 µs	19999 µs	_____	20001 µs	±304 ns
50000 µs	49999 µs	_____	50001 µs	±604 ns
65000 µs	64999 µs	_____	65001 µs	±754 ns

ManualsPlus.com

16 8565E/EC Performance Test Record

ManualsPlus.com

Test Record

Table 16-1 8565E/EC Performance Test Record

Agilent Technologies
Address:
_____
_____

Report No. _____
Date _____
(e.g. 10 SEP 1989)

Select model: 8565E ___ 8565EC ___
Serial No. _____
Firmware Revision _____

Options _____

Customer _____

Tested by _____

Ambient temperature _____ °C
Relative humidity_____%
Power mains line frequency _____ Hz (nominal)

Test Equipment Used

Description	Model No.	Trace No.	Cal Due Date
Synthesized Sweeper #1			
Synthesized Sweeper #2			
Synthesized Signal Generator			
Synthesizer/Level Generator			
Frequency Standard			
Measuring Receiver			
RF Power Sensor			
Low-Power Power Sensor			
Microwave Power Sensor			
Millimeter Power Sensor			
Pulse/Function Generator			
Microwave Frequency Counter			
Universal Frequency Counter			
Oscilloscope			
Amplifier			
Power Splitter			
1.8 GHz Low-Pass Filter			
4.4 GHz Low-Pass Filter			
50 MHz Low-Pass Filter			
50 Ω Termination			
20 dB Fixed Attenuator			
10 dB Fixed Attenuator			
20 dB Fixed Attenuator			
1 dB Fixed Attenuator			
DVM			
Function Generator			

ManualsPlus.com

Table 16-1 8565E/EC Performance Test Record

Notes/Comments: _____

_____

ManualsPlus.com

Table 16-2 Performance Test Record (2 of 28)

Agilent Technologies

Select model: 8565E ___ 8565EC ___ Report No. _____

Serial No. _____ Date _____

Test Description	Results			Measurement Uncertainty
	Minimum	Measured	Maximum	
1. 10 MHz Reference Output Accuracy (Non-Option 103)				
5-minute Warm-up Error	-1×10^{-7}	_____	$+1 \times 10^{-7}$	$\pm 2.004 \times 10^{-9}$
(0 °C to +55 °C)				
5-minute Warm-up Error	-1×10^{-6}	_____	$+1 \times 10^{-6}$	$\pm 2.004 \times 10^{-9}$
(–10 °C to 0 °C)				
15-minute Warm-up Error	-1×10^{-8}	_____	$+1 \times 10^{-8}$	$\pm 2.003 \times 10^{-9}$
2. 10 MHz Reference Output Accuracy (Option 103)				
Calibrator Frequency	299.9988 MHz	_____	300.0012 MHz	±55.75 Hz
3. Fast Sweep Time Accuracy				
(EC-Series and E-Series with Option 007)	299.700 MHz	_____	300.300 MHz	±55.75 Hz
4. Calibrator Amplitude Accuracy				
Calibrator Amplitude	–10.30 dBm	_____	+9.70 dB	±0.12 dB
10. Displayed Average Noise Level				
Non-Option 103:				
30 Hz (Option 006)		_____	–90 dBm	+1.24/–1.37 dB
1 kHz (Option 006)		_____	–105 dBm	+1.24/–1.37 dB
10 kHz		_____	–120 dBm	+1.24/–1.37 dB
100 kHz		_____	–120 dBm	+1.24/–1.37 dB
1 MHz to 10 MHz		_____	–140 dBm	+1.24/–1.37 dB
10 MHz to 2.9 GHz				
Serial Prefix <3641A		_____	–140 dBm	+1.24/–1.37 dB
Serial Prefix ≥3641A		_____	–145 dBm	+1.24/–1.37 dB
Option H13		_____	–145 dBm	+1.24/–1.37 dB
2.9 GHz to 6.46 GHz		_____	–147 dBm	+1.24/–1.37 dB

ManualsPlus.com

Test Description	Results			Measurement Uncertainty
	Minimum	Measured	Maximum	
6.46 GHz to 13.2 GHz		_____	–143 dBm	+1.24/–1.37 dB

ManualsPlus.com

Table 16-3 Performance Test Record (3 of 28)

Agilent Technologies

Select model: 8565E ___ 8565EC ___ Report No. _____

Serial No. _____ Date _____

Test Description	Results			Measurement Uncertainty
	Minimum	Measured	Maximum	
10. DANL (continued)				
13.2 GHz to 22.0 GHz		_____	–140 dBm	+1.24/–1.37 dB
22.0 GHz to 26.8 GHz		_____	–136 dBm	+1.24/–1.37 dB
26.8 GHz to 31.15 GHz		_____	–139 dBm	+1.24/–1.37 dB
31.15 GHz to 40 GHz		_____	–130 dBm	+1.24/–1.37 dB
40 GHz to 50 GHz		_____	–127 dBm	+1.24/–1.37 dB
Option 103:				
30 Hz (Option 006)		_____	–80 dBm	+1.24/–1.37 dB
1 kHz (Option 006)		_____	–95 dBm	+1.24/–1.37 dB
10 kHz		_____	–110 dBm	+1.24/–1.37 dB
100 kHz		_____	–110 dBm	+1.24/–1.37 dB
1 MHz to 10 MHz		_____	–130 dBm	+1.24/–1.37 dB
10 MHz to 2.9 GHz				
Serial Prefix <3641A		_____	–130 dBm	+1.24/–1.37 dB
Serial Prefix ≥3641A		_____	–135 dBm	+1.24/–1.37 dB
Option H13		_____	–135 dBm	+1.24/–1.37 dB
2.9 GHz to 6.46 GHz		_____	–137 dBm	+1.24/–1.37 dB
6.46 GHz to 13.2 GHz		_____	–133 dBm	+1.24/–1.37 dB
13.2 GHz to 22.0 GHz		_____	–130 dBm	+1.24/–1.37 dB
22.0 GHz to 26.8 GHz		_____	–126 dBm	+1.24/–1.37 dB
26.8 GHz to 31.15 GHz		_____	–129 dBm	+1.24/–1.37 dB
31.15 GHz to 40 GHz		_____	–120 dBm	+1.24/–1.37 dB
40 GHz to 50 GHz		_____	–117 dBm	+1.24/–1.37 dB
11. Resolution Bandwidth Switching and IF Alignment Uncertainty				
2 MHz RES BW	–0.5 dB	_____	+0.5 dB	±0.10 dB
1 MHz RES BW	–0.5 dB	_____	+0.5 dB	±0.10 dB
100 kHz RES BW	–0.5 dB	_____	+0.5 dB	±0.10dB

ManualsPlus.com

Table 16-4 Performance Test Record (4 of 28)

Agilent Technologies

Select model: 8565E ___ 8565EC ___ Report No. _____

Serial No. _____ Date _____

Test Description	Results			Measurement Uncertainty
	Minimum	Measured	Maximum	
11. Resolution Bandwidth Switching and IF Alignment Uncertainty (continued)				
30 kHz RES BW	–0.5 dB	_____	+0.5 dB	±0.10 dB
10 kHz RES BW	–0.5 dB	_____	+0.5 dB	±0.10 dB
3 kHz RES BW	–0.5 dB	_____	+0.5 dB	±0.10 dB
1 kHz RES BW	–0.5 dB	_____	+0.5 dB	±0.10 dB
300 Hz RES BW	–1.0 dB	_____	+1.0 dB	±0.10 dB
100 Hz RES BW	–0.5 dB	_____	+0.5 dB	±0.10 dB
30 Hz RES BW	–0.5 dB	_____	+0.5 dB	±0.10 dB
10 Hz RES BW	–0.5 dB	_____	+0.5 dB	±0.10 dB
3 Hz RES BW*	–0.5 dB	_____	+0.5 dB	±0.10 dB
1 Hz RES BW*	–0.5 dB	_____	+0.5 dB	±0.10 dB
12. Resolution Bandwidth Accuracy and Selectivity				
3 dB Bandwidth Accuracy				
2 MHz RES BW	–25%	_____	+50%	±1.33%
1 MHz RES BW	–25%	_____	+25%	±1.33%
300 kHz RES BW	–10%	_____	+10%	±1.33%
100 kHz RES BW	–10%	_____	+10%	±1.33%
30 kHz RES BW	–10%	_____	+10%	±1.33%
10 kHz RES BW	–10%	_____	+10%	±1.33%
3 kHz RES BW	–10%	_____	+10%	±1.33%
1 kHz RES BW	–10%	_____	+10%	±1.33%
300 Hz RES BW	–10%	_____	+10%	±1.33%
Selectivity				
2 MHz RES BW		_____	15:1	±2.89%
1 MHz RES BW		_____	15:1	±2.89%

* 3 Hz and 1 Hz RES BW not available with Option 103.

ManualsPlus.com

Table 16-5 Performance Test Record (5 of 28)

Agilent Technologies

Select model: 8565E ___ 8565EC ___ Report No. _____

Serial No. _____ Date _____

Test Description	Results			Measurement Uncertainty
	Minimum	Measured	Maximum	
12. Resolution Bandwidth Accuracy and Selectivity (continued)				
Selectivity (cont'd)				
300 kHz RES BW		_____	15:1	±2.89%
100 kHz RES BW		_____	15:1	±2.89%
30 kHz RES BW		_____	15:1	±2.89%
10 kHz RES BW		_____	15:1	±2.89%
3 kHz RES BW		_____	15:1	±2.89%
1 kHz RES BW		_____	15:1	±2.89%
300 Hz RES BW		_____	15:1	±2.89%
14. Input Attenuator Switching Uncertainty				
Cumulative, 50 MHz				
20 dB ATTEN	–0.6 dB	_____	+0.6 dB	±0.12 dB
30 dB ATTEN	–1.2 dB	_____	+1.2 dB	±0.12 dB
40 dB ATTEN	–1.8 dB	_____	+1.8 dB	±0.12 dB
50 dB ATTEN	–1.8 dB	_____	+1.8 dB	±0.14 dB
60 dB ATTEN	–1.8 dB	_____	+1.8 dB	±0.14 dB
Incremental, 50 MHz				
20 dB ATTEN	–0.6 dB	_____	+0.6 dB	±0.12 dB
30 dB ATTEN	–0.6 dB	_____	+0.6 dB	±0.12 dB
40 dB ATTEN	–0.6 dB	_____	+0.6 dB	±0.12 dB
50 dB ATTEN	–0.6 dB	_____	+0.6 dB	±0.14 dB
60 dB ATTEN	–0.6 dB	_____	+0.6 dB	±0.14 dB
Cumulative, 2.9 GHz				
20 dB ATTEN	–0.6 dB	_____	+0.6 dB	±0.23 dB
30 dB ATTEN	–1.2 dB	_____	+1.2 dB	±0.23 dB

ManualsPlus.com

Table 16-6 Performance Test Record (6 of 28)

Agilent Technologies

Select model: 8565E ___ 8565EC ___ Report No. _____

Serial No. _____ Date _____

Test Description	Results			Measurement Uncertainty
	Minimum	Measured	Maximum	
14. Input Attenuator Switching Uncertainty (continued)				
Cumulative, 2.9 GHz (cont'd)				
40 dB ATTEN	–1.8 dB	_____	+1.8 dB	±0.23 dB
50 dB ATTEN	–1.8 dB	_____	+1.8 dB	±0.23 dB
60 dB ATTEN	–1.8 dB	_____	+1.8 dB	+0.24/–0.25 dB
Incremental, 2.9 GHz				
20 dB ATTEN	–0.6 dB	_____	+0.6 dB	±0.23 dB
30 dB ATTEN	–0.6 dB	_____	+0.6 dB	±0.23 dB
40 dB ATTEN	–0.6 dB	_____	+0.6 dB	±0.23 dB
50 dB ATTEN	–0.6 dB	_____	+0.6 dB	±0.23 dB
60 dB ATTEN	–0.6 dB	_____	+0.6 dB	+0.24/–0.25 dB
15. IF Gain Uncertainty				
LOG, 10 dB steps				
–10 dBm REF LVL	–1.0 dB	_____	+1.0 dB	±0.11 dB
–20 dBm REF LVL	–1.0 dB	_____	+1.0 dB	±0.11 dB
–30 dBm REF LVL	–1.0 dB	_____	+1.0 dB	±0.11 dB
–40 dBm REF LVL	–1.0 dB	_____	+1.0 dB	±0.11 dB
–50 dBm REF LVL	–1.0 dB	_____	+1.0 dB	±0.11 dB
–60 dBm REF LVL	–1.0 dB	_____	+1.0 dB	±0.12 dB
–70 dBm REF LVL	–1.0 dB	_____	+1.0 dB	±0.12 dB
–80 dBm REF LVL	–1.0 dB	_____	+1.0 dB	±0.12 dB
LOG, 1 dB steps				
–1 dBm REF LVL	–1.0 dB	_____	+1.0 dB	±0.11 dB
–2 dBm REF LVL	–1.0 dB	_____	+1.0 dB	±0.11 dB
–3 dBm REF LVL	–1.0 dB	_____	+1.0 dB	±0.11 dB

ManualsPlus.com

Table 16-7 Performance Test Record (7 of 28)

Agilent Technologies

Select model: 8565E ___ 8565EC ___ Report No. _____

Serial No. _____ Date _____

Test Description	Results			Measurement Uncertainty
	Minimum	Measured	Maximum	
15. IF Gain Uncertainty (continued)				
LOG, 1 dB steps (cont'd)				
–4 dBm REF LVL	–1.0 dB	_____	+1.0 dB	±0.11 dB
–5 dBm REF LVL	–1.0 dB	_____	+1.0 dB	±0.11 dB
–6 dBm REF LVL	–1.0 dB	_____	+1.0 dB	±0.11 dB
–7 dBm REF LVL	–1.0 dB	_____	+1.0 dB	±0.11 dB
–8 dBm REF LVL	–1.0 dB	_____	+1.0 dB	±0.11 dB
–9 dBm REF LVL	–1.0 dB	_____	+1.0 dB	±0.11 dB
–10 dBm REF LVL	–1.0 dB	_____	+1.0 dB	±0.11 dB
–11 dBm REF LVL	–1.0 dB	_____	+1.0 dB	±0.11 dB
–12 dBm REF LVL	–1.0 dB	_____	+1.0 dB	±0.11 dB
LINEAR, 10 dB steps				
–10 dBm REF LVL	–1.0 dB	_____	+1.0 dB	±0.11 dB
–20 dBm REF LVL	–1.0 dB	_____	+1.0 dB	±0.11 dB
–30 dBm REF LVL	–1.0 dB	_____	+1.0 dB	±0.11 dB
–40 dBm REF LVL	–1.0 dB	_____	+1.0 dB	±0.11 dB
–50 dBm REF LVL	–1.0 dB	_____	+1.0 dB	±0.11 dB
–60 dBm REF LVL	–1.0 dB	_____	+1.0 dB	±0.12 dB
–70 dBm REF LVL	–1.0 dB	_____	+1.0 dB	±0.12 dB
–80 dBm REF LVL	–1.0 dB	_____	+1.0 dB	±0.12 dB
16. Scale Fidelity				
Cumulative, 10 dB/Div,				
RES BW ≥300 Hz				
–6 dB from REF LVL	–0.60 dB	_____	+0.60 dB	±0.24 dB
–12 dB from REF LVL	–0.85 dB	_____	+0.85 dB	±0.24 dB
–18 dB from REF LVL	–0.85 dB	_____	+0.85 dB	±0.24 dB
–24 dB from REF LVL	–0.85 dB	_____	+0.85 dB	±0.24 dB

ManualsPlus.com

Table 16-8 Performance Test Record (8 of 28)

Agilent Technologies

Select model: 8565E ___ 8565EC ___ Report No. _____

Serial No. _____ Date _____

Test Description	Results			Measurement Uncertainty
	Minimum	Measured	Maximum	
16. Scale Fidelity (continued)				
Cumulative, 10 dB/Div, (cont'd)				
RES BW ≥300 Hz (cont'd)				
–30 dB from REF LVL	–0.85 dB	_____	+0.85 dB	±0.24 dB
–36 dB from REF LVL	–0.85 dB	_____	+0.85 dB	±0.24 dB
–42 dB from REF LVL	–0.85 dB	_____	+0.85 dB	±0.24 dB
–48 dB from REF LVL	–0.85 dB	_____	+0.85 dB	±0.24 dB
–54 dB from REF LVL	–0.85 dB	_____	+0.85 dB	±0.24 dB
–60 dB from REF LVL	–0.85 dB	_____	+0.85 dB	+0.25/–0.26 dB
–66 dB from REF LVL	–0.85 dB	_____	+0.85 dB	+0.25/–0.26 dB
–72 dB from REF LVL	–0.85 dB	_____	+0.85 dB	+0.25/–0.26 dB
–78 dB from REF LVL	–0.85 dB	_____	+0.85 dB	+0.25/–0.26 dB
–84 dB from REF LVL	–0.85 dB	_____	+0.85 dB	+0.25/–0.26 dB
–90 dB from REF LVL	–0.85 dB	_____	+0.85 dB	+0.25/–0.26 dB
Incremental, 10 dB/Div,				
RES BW ≥300 Hz				
–12 dB from REF LVL	–0.10 dB	_____	+0.10 dB	±0.04 dB
–18 dB from REF LVL	–0.10 dB	_____	+0.10 dB	±0.04 dB
–24 dB from REF LVL	–0.10 dB	_____	+0.10 dB	±0.04 dB
–30 dB from REF LVL	–0.10 dB	_____	+0.10 dB	±0.04 dB
–36 dB from REF LVL	–0.10 dB	_____	+0.10 dB	±0.04 dB
–42 dB from REF LVL	–0.10 dB	_____	+0.10 dB	±0.04 dB
–48 dB from REF LVL	–0.10 dB	_____	+0.10 dB	±0.04 dB
–54 dB from REF LVL	–0.10 dB	_____	+0.10 dB	±0.04 dB
–60 dB from REF LVL	–0.10 dB	_____	+0.10 dB	±0.04 dB
–66 dB from REF LVL	–0.10 dB	_____	+0.10 dB	±0.04 dB
–72 dB from REF LVL	–0.10 dB	_____	+0.10 dB	±0.05 dB

ManualsPlus.com

Table 16-9 Performance Test Record (9 of 28)

Agilent Technologies

Select model: 8565E ___ 8565EC ___ Report No. _____

Serial No. _____ Date _____

Test Description	Results			Measurement Uncertainty
	Minimum	Measured	Maximum	
16. Scale Fidelity (continued)				
Incremental, 10 dB/Div,				
RES BW ≥300 Hz (cont'd)				
–78 dB from REF LVL	–0.10 dB	_____	+0.10 dB	±0.05 dB
–84 dB from REF LVL	–0.10 dB	_____	+0.10 dB	±0.05 dB
–90 dB from REF LVL	–0.10 dB	_____	+0.10 dB	±0.05 dB
Cumulative, 10 dB/Div,				
RES BW ≤100 Hz				
–6 dB from REF LVL	–0.60 dB	_____	+0.60 dB	±0.24 dB
–12 dB from REF LVL	–0.85 dB	_____	+0.85 dB	±0.24 dB
–18 dB from REF LVL	–0.85 dB	_____	+0.85 dB	±0.24 dB
–24 dB from REF LVL	–0.85 dB	_____	+0.85 dB	±0.24 dB
–30 dB from REF LVL	–0.85 dB	_____	+0.85 dB	±0.24 dB
–36 dB from REF LVL	–0.85 dB	_____	+0.85 dB	±0.24 dB
–42 dB from REF LVL	–0.85 dB	_____	+0.85 dB	±0.24 dB
–48 dB from REF LVL	–0.85 dB	_____	+0.85 dB	±0.24 dB
–54 dB from REF LVL	–0.85 dB	_____	+0.85 dB	±0.24 dB
–60 dB from REF LVL	–0.85 dB	_____	+0.85 dB	+0.25/–0.26 dB
–66 dB from REF LVL	–0.85 dB	_____	+0.85 dB	+0.25/–0.26 dB
–72 dB from REF LVL	–0.85 dB	_____	+0.85 dB	+0.25/–0.26 dB
–78 dB from REF LVL	–0.85 dB	_____	+0.85 dB	+0.25/–0.26 dB
–84 dB from REF LVL	–0.85 dB	_____	+0.85 dB	+0.25/–0.26 dB
–90 dB from REF LVL	–0.85 dB	_____	+0.85 dB	+0.25/–0.26 dB
–94 dB from REF LVL	–1.50 dB	_____	+1.50 dB	+0.25/–0.26 dB
–98 dB from REF LVL	–1.50 dB	_____	+1.50 dB	+0.25/–0.26 dB

ManualsPlus.com

Table 16-10 Performance Test Record (10 of 28)

Agilent Technologies

Select model: 8565E ___ 8565EC ___ Report No. _____

Serial No. _____ Date _____

Test Description	Results			Measurement Uncertainty
	Minimum	Measured	Maximum	
16. Scale Fidelity (continued)				
Incremental, 10 dB/Div,				
RES BW ≤100 Hz				
–12 dB from REF LVL	–0.20 dB	_____	+0.20 dB	±0.04 dB
–18 dB from REF LVL	–0.20 dB	_____	+0.20 dB	±0.04 dB
–24 dB from REF LVL	–0.20 dB	_____	+0.20 dB	±0.04 dB
–30 dB from REF LVL	–0.20 dB	_____	+0.20 dB	±0.04 dB
–36 dB from REF LVL	–0.20 dB	_____	+0.20 dB	±0.04 dB
–42 dB from REF LVL	–0.20 dB	_____	+0.20 dB	±0.04 dB
–48 dB from REF LVL	–0.20 dB	_____	+0.20 dB	±0.04 dB
–54 dB from REF LVL	–0.20 dB	_____	+0.20 dB	±0.04 dB
–60 dB from REF LVL	–0.20 dB	_____	+0.20 dB	±0.04 dB
–66 dB from REF LVL	–0.20 dB	_____	+0.20 dB	±0.04 dB
–72 dB from REF LVL	–0.20 dB	_____	+0.20 dB	±0.05 dB
–78 dB from REF LVL	–0.20 dB	_____	+0.20 dB	±0.05 dB
–84 dB from REF LVL	–0.20 dB	_____	+0.20 dB	±0.05 dB
–90 dB from REF LVL	–0.20 dB	_____	+0.20 dB	±0.05 dB
Cumulative, 2 dB/Div				
–2 dB from REF LVL	–0.20 dB	_____	+0.20 dB	±0.053 dB
–4 dB from REF LVL	–0.40 dB	_____	+0.40 dB	±0.053 dB
–6 dB from REF LVL	–0.60 dB	_____	+0.60 dB	±0.053 dB
–8 dB from REF LVL	–0.80 dB	_____	+0.80 dB	±0.053 dB
–10 dB from REF LVL	–0.85 dB	_____	+0.85 dB	±0.053 dB
–12 dB from REF LVL	–0.85 dB	_____	+0.85 dB	±0.053 dB
–14 dB from REF LVL	–0.85 dB	_____	+0.85 dB	±0.053 dB
–16 dB from REF LVL	–0.85 dB	_____	+0.85 dB	±0.053 dB
–18 dB from REF LVL	–0.85 dB	_____	+0.85 dB	±0.053 dB

ManualsPlus.com

Table 16-11 Performance Test Record (11 of 28)

Agilent Technologies

Select model: 8565E ___ 8565EC ___ Report No. _____

Serial No. _____ Date _____

Test Description	Results			Measurement Uncertainty
	Minimum	Measured	Maximum	
16. Scale Fidelity (continued)				
Incremental, 2 dB/Div				
–2 dB from REF LVL	–0.10 dB	_____	+0.10 dB	±0.04 dB
–4 dB from REF LVL	–0.10 dB	_____	+0.10 dB	±0.04 dB
–6 dB from REF LVL	–0.10 dB	_____	+0.10 dB	±0.04 dB
–8 dB from REF LVL	–0.10 dB	_____	+0.10 dB	±0.04 dB
–10 dB from REF LVL	–0.10 dB	_____	+0.10 dB	±0.04 dB
–12 dB from REF LVL	–0.10 dB	_____	+0.10 dB	±0.04 dB
–14 dB from REF LVL	–0.10 dB	_____	+0.10 dB	±0.04 dB
–16 dB from REF LVL	–0.10 dB	_____	+0.10 dB	±0.04 dB
–18 dB from REF LVL	–0.10 dB	_____	+0.10 dB	±0.04 dB
Linear				
–2 dB from REF LVL	–2.33 dB	_____	–1.68 dB	±0.04 dB
–4 dB from REF LVL	–4.42 dB	_____	–3.60 dB	±0.04 dB
–6 dB from REF LVL	–6.54 dB	_____	–5.50 dB	±0.04 dB
–8 dB from REF LVL	–8.68 dB	_____	–7.37 dB	±0.04 dB
–10 dB from REF LVL	–10.87 dB	_____	–9.21 dB	±0.04 dB
–12 dB from REF LVL	–13.10 dB	_____	–11.02 dB	±0.04 dB
–14 dB from REF LVL	–15.42 dB	_____	–12.78 dB	±0.04 dB
–16 dB from REF LVL	–17.82 dB	_____	–14.49 dB	±0.04 dB
–18 dB from REF LVL	–20.36 dB	_____	–16.14 dB	±0.04 dB
17. Residual FM				
Non-Option 103		_____	1 Hz	±0.2 Hz
Option 103		_____	10 Hz	±0.8 Hz

ManualsPlus.com

Table 16-12 Performance Test Record (12 of 28)

Agilent Technologies

Select model: 8565E ___ 8565EC ___ Report No. _____

Serial No. _____ Date _____

Test Description	Results			Measurement Uncertainty
	Minimum	Measured	Maximum	
19. Noise Sidebands				
Non-Option 103				
+100 Hz offset (serial prefix <3510A)		_____	–80 dBc/Hz	+1.22/–1.34 dB
+100 Hz offset (serial prefix ≥3510A)		_____	–88 dBc/Hz	+1.22/–1.34 dB
–100 Hz offset (serial prefix <3510A)		_____	–80 dBc/Hz	+1.22/–1.34 dB
–100 Hz offset (serial prefix ≥3510A)		_____	–88 dBc/Hz	+1.22/–1.34 dB
+1 kHz offset		_____	–97 dBc/Hz	+1.22/–1.34 dB
–1 kHz offset		_____	–97 dBc/Hz	+1.22/–1.34 dB
+10 kHz offset		_____	–113 dBc/Hz	+1.22/–1.34 dB
–10 kHz offset		_____	–113 dBc/Hz	+1.22/–1.34 dB
+30 kHz offset		_____	N/A*	+1.22/–1.34 dB
–30 kHz offset		_____	N/A*	+1.22/–1.34 dB
+100 kHz offset (serial prefix <3510A)		_____	–116 dBc/Hz	+1.22/–1.34 dB
+100 kHz offset (serial prefix ≥3510A)		_____	–117 dBc/Hz	+1.22/–1.34 dB
–100 kHz offset (serial prefix <3510A)		_____	–116 dBc/Hz	+1.22/–1.34 dB
–100 kHz offset (serial prefix ≥3510A)		_____	–117 dBc/Hz	+1.22/–1.34 dB
Option 103				
+100 Hz offset		_____	–70 dBc/Hz	+1.22/–1.34 dB
–100 Hz offset		_____	–70 dBc/Hz	+1.22/–1.34 dB
+1 kHz offset		_____	–90 dBc/Hz	+1.22/–1.34 dB
–1 kHz offset		_____	–90 dBc/Hz	+1.22/–1.34 dB
+10 kHz offset		_____	–113 dBc/Hz	+1.22/–1.34 dB

* Noise sidebands are not specified at ±30 kHz offset; measurement is for characterization only.

ManualsPlus.com

Table 16-13 Performance Test Record (13 of 28)

Agilent Technologies

Select model: 8565E ___ 8565EC ___ Report No. _____

Serial No. _____ Date _____

Test Description	Results			Measurement Uncertainty
	Minimum	Measured	Maximum	
19. Noise Sidebands (continued)				
Option 103 (cont'd)				
–10 kHz offset		_____	–113 dBc/Hz	+1.22/–1.34 dB
+30 kHz offset		_____	N/A*	+1.22/–1.34 dB
–30 kHz offset		_____	N/A*	+1.22/–1.34 dB
+100 kHz offset (serial prefix <3510A)		_____	–116 dBc/Hz	+1.22/–1.34 dB
+100 kHz offset (serial prefix ≥3510A)		_____	–117 dBc/Hz	+1.22/–1.34 dB
–100 kHz offset (serial prefix <3510A)		_____	–116 dBc/Hz	+1.22/–1.34 dB
–100 kHz offset (serial prefix ≥3510A)		_____	–117 dBc/Hz	+1.22/–1.34 dB
25. Image, Multiple, and Out-of-Range Responses				
2 GHz CENTER FREQ				
2021.4 MHz		_____	–80 dBc	+0.8/–1.0 dB
2621.4 MHz		_____	–80 dBc	+0.8/–1.0 dB
2321.4 MHz		_____	–80 dBc	+0.8/–1.0 dB
2600.0 MHz		_____	–80 dBc	+0.8/–1.0 dB
7910.7 MHz		_____	–80 dBc	+0.8/–1.0 dB
9821.4 MHz		_____	–80 dBc	+0.8/–1.0 dB
4 GHz CENTER FREQ				
4021.4 MHz		_____	–80 dBc	+0.8/–1.0 dB
4621.4 MHz		_____	–80 dBc	+0.8/–1.0 dB
4321.4 MHz		_____	–80 dBc	+0.8/–1.0 dB
4600.0 MHz		_____	–80 dBc	+0.8/–1.0 dB

* Noise sidebands are not specified at ±30 kHz offset; measurement is for characterization only.

ManualsPlus.com

Table 16-14 Performance Test Record (14 of 28)

Agilent Technologies

Select model: 8565E ___ 8565EC ___ Report No. _____

Serial No. _____ Date _____

Test Description	Results			Measurement Uncertainty
	Minimum	Measured	Maximum	
25. Image, Multiple, and Out-of-Range Responses (continued)				
4 GHz CENTER FREQ (cont'd)				
8310.7 MHz		_____	–80 dBc	+0.8/–1.0 dB
8932.1 MHz		_____	–80 dBc	+0.8/–1.0 dB
9 GHz CENTER FREQ				
9021.4 MHz		_____	–80 dBc	+0.8/–1.0 dB
9621.4 MHz		_____	–80 dBc	+0.8/–1.0 dB
9321.4 MHz		_____	–80 dBc	+0.8/–1.0 dB
9600.0 MHz		_____	–80 dBc	+0.8/–1.0 dB
18310.7 MHz		_____	–80 dBc	+0.8/–1.0 dB
18932.1 MHz		_____	–80 dBc	+0.8/–1.0 dB
15 GHz CENTER FREQ				
15021.400 MHz		_____	–80 dBc	+0.9/–1.1 dB
15621.400 MHz		_____	–80 dBc	+0.9/–1.1 dB
22655.350 MHz		_____	–80 dBc	+0.9/–1.1 dB
23276.750 MHz		_____	–80 dBc	+0.9/–1.1 dB
7344.650 MHz		_____	–80 dBc	+0.9/–1.1 dB
7966.050 MHz		_____	–80 dBc	+0.9/–1.1 dB
20 GHz CENTER FREQ				
20021.400 MHz		_____	–80 dBc	+0.9/–1.1 dB
20621.400 MHz		_____	–80 dBc	+0.9/–1.1 dB
15543.725 MHz		_____	–80 dBc	+0.9/–1.1 dB
25699.075 MHz		_____	–80 dBc	+0.9/–1.1 dB
9844.650 MHz		_____	–80 dBc	+0.9/–1.1 dB
10466.050 MHz		_____	–80 dBc	+0.9/–1.1 dB

ManualsPlus.com

Table 16-15 Performance Test Record (15 of 28)

Agilent Technologies

Select model: 8565E ___ 8565EC ___ Report No. _____

Serial No. _____ Date _____

Test Description	Results			Measurement Uncertainty
	Minimum	Measured	Maximum	
25. Image, Multiple, and Out-of-Range Responses (continued)				
29 GHz CENTER FREQ				
28378.600 MHz		_____	–60 dBc	+0.88/–0.96 dB
28978.600 MHz		_____	–60 dBc	+0.88/–0.96 dB
24450.925 MHz		_____	–55 dBc	+0.88/–0.96 dB
28700.000 MHz		_____	–55 dBc	+0.88/–0.96 dB
16455.350 MHz		_____	–55 dBc	+0.88/–0.96 dB
35272.325 MHz		_____	–55 dBc	+0.88/–0.96 dB
35 GHz CENTER FREQ				
35021.400 MHz		_____	–60 dBc	+0.88/–0.96 dB
35621.400 MHz		_____	–60 dBc	+0.88/–0.96 dB
33093.725 MHz		_____	–55 dBc	+0.88/–0.96 dB
35321.400 MHz		_____	–55 dBc	+0.88/–0.96 dB
8744.538 MHz		_____	–55 dBc	+0.88/–0.96 dB
15544.650 MHz		_____	–55 dBc	+0.88/–0.96 dB
45 GHz CENTER FREQ				
45021.400 MHz		_____	–60 dBc	+0.94/–1.07 dB
45621.400 MHz		_____	–60 dBc	+0.94/–1.07 dB
34479.888 MHz		_____	–55 dBc	+0.94/–1.07 dB
40593.725 MHz		_____	–55 dBc	+0.94/–1.07 dB
8316.975 MHz		_____	–55 dBc	+0.94/–1.07 dB
20544.650 MHz		_____	–55 dBc	+0.94/–1.07 dB

ManualsPlus.com

Table 16-16 Performance Test Record (16 of 28)

Agilent Technologies

Select model: 8565E ___ 8565EC ___ Report No. _____

Serial No. _____ Date _____

Test Description	Results			Measurement Uncertainty
	Minimum	Measured	Maximum	
31. Frequency Readout Accuracy and Frequency Count Marker Accuracy				
Frequency Readout Accuracy:				
1.5 GHz CENTER FREQ				
1 MHz SPAN	1.499988GHz	_____	1.500012GHz	±1 Hz
10 MHz SPAN	1.49948 GHz	_____	1.50052 GHz	±1 Hz
20 MHz SPAN	1.49895 GHz	_____	1.50105 GHz	±1 Hz
50 MHz SPAN	1.49745 GHz	_____	1.50255 GHz	±1 Hz
100 MHz SPAN	1.4948 GHz	_____	1.5052 GHz	±1 Hz
1 GHz SPAN	1.450 GHz	_____	1.550 GHz	±1 Hz
4.0 GHz CENTER FREQ				
1 MHz SPAN	3.999988GHz	_____	4.000012GHz	±1 Hz
10 MHz SPAN	3.99948 GHz	_____	4.00052 GHz	±1 Hz
20 MHz SPAN	3.99895 GHz	_____	4.00105 GHz	±1 Hz
50 MHz SPAN	3.99745 GHz	_____	4.00255 GHz	±1 Hz
100 MHz SPAN	3.9948 GHz	_____	4.0052 GHz	±1 Hz
1 GHz SPAN	3.950 GHz	_____	4.050 GHz	±1 Hz
9.0 GHz CENTER FREQ				
1 MHz SPAN	8.999988GHz	_____	9.000012GHz	±2 Hz
10 MHz SPAN	8.99948 GHz	_____	9.00052 GHz	±2 Hz
20 MHz SPAN	8.99895 GHz	_____	9.00105 GHz	±2 Hz
50 MHz SPAN	8.99745 GHz	_____	9.00255 GHz	±2 Hz
100 MHz SPAN	8.9948 GHz	_____	9.0052 GHz	±2 Hz
1 GHz SPAN	8.950 GHz	_____	9.050 GHz	±2 Hz

ManualsPlus.com

Table 16-17 Performance Test Record (17 of 28)

Agilent Technologies

Select model: 8565E ___ 8565EC ___ Report No. _____

Serial No. _____ Date _____

Test Description	Results			Measurement Uncertainty
	Minimum	Measured	Maximum	
31. Frequency Readout Accuracy and Frequency Count Marker Accuracy (continued)				
Frequency Readout Accuracy: (cont'd)				
16.0 GHz CENTER FREQ				
1 MHz SPAN	15.999988GHz	_____	16.000012GHz	±3 Hz
10 MHz SPAN	15.99948 GHz	_____	16.00052 GHz	±3 Hz
20 MHz SPAN	15.99895 GHz	_____	16.00105 GHz	±3 Hz
50 MHz SPAN	15.99745 GHz	_____	16.00255 GHz	±3 Hz
100 MHz SPAN	15.9948 GHz	_____	16.0052 GHz	±3 Hz
1 GHz SPAN	15.950 GHz	_____	16.050 GHz	±3 Hz
21.0 GHz CENTER FREQ				
1 MHz SPAN	20.999988GHz	_____	21.000012GHz	±4 Hz
10 MHz SPAN	20.99948 GHz	_____	21.00052 GHz	±4 Hz
20 MHz SPAN	20.99895 GHz	_____	21.00105 GHz	±4 Hz
50 MHz SPAN	20.99745 GHz	_____	21.00255 GHz	±4 Hz
100 MHz SPAN	20.9948 GHz	_____	21.0052 GHz	±4 Hz
1 GHz SPAN	20.950 GHz	_____	21.050 GHz	±4 Hz
29.0 GHz CENTER FREQ				
1 MHz SPAN	28.999988GHz	_____	29.000012GHz	±6 Hz
10 MHz SPAN	28.99948 GHz	_____	29.00052 GHz	±6 Hz
20 MHz SPAN	28.99895 GHz	_____	29.00105 GHz	±6 Hz
50 MHz SPAN	28.99745 GHz	_____	29.00255 GHz	±6 Hz
100 MHz SPAN	28.9948 GHz	_____	29.0052 GHz	±6 Hz
1 GHz SPAN	28.950 GHz	_____	29.050 GHz	±6 Hz

ManualsPlus.com

Table 16-18 Performance Test Record (18 of 28)

Agilent Technologies

Select model: 8565E ___ 8565EC ___ Report No. _____

Serial No. _____ Date _____

Test Description	Results			Measurement Uncertainty
	Minimum	Measured	Maximum	
31. Frequency Readout Accuracy and Frequency Count Marker Accuracy (continued)				
35.0 GHz CENTER FREQ				
1 MHz SPAN	34.999988GHz		35.000012 GHz	±6 Hz
10 MHz SPAN	34.99948 GHz		35.00052 GHz	±6 Hz
20 MHz SPAN	34.99895 GHz	_____	35.00105 GHz	±6 Hz
50 MHz SPAN	34.99745 GHz	_____	35.00255 GHz	±6 Hz
100 MHz SPAN	34.9948 GHz	_____	35.0052 GHz	±6 Hz
1 GHz SPAN	34.950 GHz	_____	35.050 GHz	±6 Hz
45.0 GHz CENTER FREQ				
1 MHz SPAN	44.999988GHz	_____	45.000012 GHz	±8 Hz
10 MHz SPAN	44.99948 GHz	_____	45.00052 GHz	±8 Hz
20 MHz SPAN	44.99895 GHz	_____	45.00105 GHz	±8 Hz
50 MHz SPAN	44.99745 GHz	_____	45.00255 GHz	±8 Hz
100 MHz SPAN	44.9948 GHz	_____	45.0052 GHz	±8 Hz
1 GHz SPAN	44.950 GHz	_____	45.050 GHz	±8 Hz
Frequency Count Marker Accuracy:				
1.5 GHz CENTER FREQ	1.499999997 GHz	_____	1.500000003 GHz	±1 Hz
4.0 GHz CENTER FREQ	3.999999997 GHz	_____	4.000000003 GHz	±1 Hz
9.0 GHz CENTER FREQ	8.999999995 GHz	_____	9.000000005 GHz	±2 Hz
16.0 GHz CENTER FREQ	15.999999991 GHz	_____	16.000000009 GHz	±3 Hz

ManualsPlus.com

Table 16-19 Performance Test Record (19 of 28)

Agilent Technologies

Select model: 8565E ___ 8565EC ___ Report No. _____

Serial No. _____ Date _____

Test Description	Results			Measurement Uncertainty
	Minimum	Measured	Maximum	
31. Frequency Readout Accuracy and Frequency Count Marker Accuracy (continued)				
Frequency Count Marker Accuracy: (cont'd)				
21.0 GHz CENTER FREQ	20.999999991 GHz	_____	21.000000009 GHz	±4 Hz
29.0 GHz CENTER FREQ	29.999999991 GHz	_____	30.000000009 GHz	±6 Hz
35.0 GHz CENTER FREQ	34.999999983 GHz	_____	35.000000017 GHz	±6 Hz
45.0 GHz CENTER FREQ	44.999999983 GHz		45.000000017 GHz	±8 Hz
32. Pulse Digitization Uncertainty				
LOG 5dB/Div				
1 MHz RES BW		_____	1.25 dB	±0.15 dB
2 MHz RES BW		_____	3.0 dB	+0.43/–0.44 dB
LINEAR				
1 MHz RES BW		_____	4%	±0.31%
2 MHz RES BW		_____	12%	±0.65%
35. Second Harmonic Distortion (SHD)				
SHD (< 1.45 GHz)				
Serial Prefix <3641A		_____	–72 dBc	+1.87/–2.28 dB
Serial Prefix ≥3641A		_____	–79 dBc	+1.87/–2.28 dB
Option H13		_____	–79 dBc	+1.87/–2.28 dB
SHD (1.5 GHz)		_____	–85 dBc	+2.32/–2.66 dB
SHD (> 2.0 GHz)		_____	–100 dBc	+2.32/–2.66 dB

ManualsPlus.com

Table 16-20 Performance Test Record (20 of 28)

Agilent Technologies

Select model: 8565E ___ 8565EC ___ Report No. _____

Serial No. _____ Date _____

Test Description	Results			Measurement Uncertainty
	Minimum	Measured	Maximum	
41. Frequency Response				
(Enter data for either the –10 °C to 55 °C or 20 °C to 30 °C temperature range)				
–10 °C to 55 °C				
Band 0				
Maximum Positive Response		_____	+1.5 dB	+0.37/–0.41 dB
Maximum Negative Response	–1.5 dB	_____		+0.37/–0.41 dB
Peak-to-Peak Response		_____	2.0 dB	+0.37/–0.41 dB
Band 1				
Maximum Positive Response		_____	+2.6 dB	+0.49/–0.55 dB
Maximum Negative Response	–2.6 dB	_____		+0.49/–0.55 dB
Peak-to-Peak Response		_____	3.4 dB	+0.49/–0.55 dB
Band 2				
Maximum Positive Response		_____	+3.0 dB	+0.49/–0.56 dB
Maximum Negative Response	–3.0 dB	_____		+0.49/–0.56 dB
Peak-to-Peak Response		_____	5.2 dB	+0.49/–0.56 dB
Band 3, < 22 GHz				
Maximum Positive Response		_____	+4.0 dB	+0.53/–0.60 dB
Maximum Negative Response	–4.0 dB	_____		+0.53/–0.60 dB
Peak-to-Peak Response		_____	5.0 dB	+0.53/–0.60 dB

ManualsPlus.com

Table 16-21 Performance Test Record (21 of 28)

Agilent Technologies

Select model: 8565E ___ 8565EC ___ Report No. _____

Serial No. _____ Date _____

Test Description	Results			Measurement Uncertainty
	Minimum	Measured	Maximum	
41. Frequency Response (continued)				
–10 °C to 55 °C (cont'd)				
Band 3, > 22 GHz				
Maximum Positive Response		_____	+4.5 dB	+0.53/–0.60 dB
Maximum Negative Response	–4.5 dB	_____		+0.53/–0.60 dB
Peak-to-Peak Response		_____	6.6 dB	+0.53/–0.60 dB
Band 4				
Maximum Positive Response		_____	+4.0 dB	+0.74/–0.89 dB
Maximum Negative Response	–4.0 dB	_____		+0.74/–0.89 dB
Peak-to-Peak Response		_____	6.2 dB	+0.74/–0.89 dB
Band 5				
Maximum Positive Response		_____	+4.0 dB	+0.74/–0.89 dB
Maximum Negative Response	–4.0 dB	_____		+0.74/–0.89 dB
Peak-to-Peak Response		_____	5.2 dB	+0.74/–0.89 dB
Band 0, 100 MHz to 2.0 GHz (serial prefix ≥3641A)				
Peak-to-Peak Response		_____	1.8 dB	+0.37/–0.41 dB
Band Switching Uncertainty:				
Band 0 to Band 1		_____	3.7 dB	+0.86/–0.96 dB
Band 0 to Band 2		_____	4.6 dB	+0.86/–0.97 dB
Band 0 to Band 3, <22GHz		_____	4.5 dB	+0.90/–1.01 dB
Band 0 to Band 3, >22GHz		_____	5.3 dB	+0.90/–1.01 dB
Band 0 to Band 4		_____	5.1 dB	+1.11/–1.30 dB

ManualsPlus.com

Table 16-22 Performance Test Record (22 of 28)

Agilent Technologies

Select model: 8565E ___ 8565EC ___ Report No. _____

Serial No. _____ Date _____

Test Description	Results			Measurement Uncertainty
	Minimum	Measured	Maximum	
41. Frequency Response (continued)				
–10 °C to 55 °C (cont'd)				
Band 0 to Band 5		_____	4.6 dB	+1.11/–1.30 dB
Band 1 to Band 2		_____	5.3 dB	+0.98/–1.11 dB
Band 1 to Band 3, <22GHz		_____	5.2 dB	+1.02/–1.15 dB
Band 1 to Band 3, >22GHz		_____	6.0 dB	+1.02/–1.15dB
Band 1 to Band 4		_____	5.8 dB	+1.23/–1.44 dB
Band 1 to Band 5		_____	5.3 dB	+1.23/–1.44 dB
Band 2 to Band 3, <22GHz		_____	6.1 dB	+1.02/–1.16 dB
Band 2 to Band 3, >22GHz		_____	6.9 dB	+1.02/–1.16 dB
Band 2 to Band 4		_____	6.7 dB	+1.23/–1.45 dB
Band 2 to Band 5		_____	6.2 dB	+1.23/–1.45 dB
Band 3, <22 GHz to Band 3, >22 GHz		_____	6.8 dB	+1.06/–1.20 dB
Band 3, <22 GHz to Band 4		_____	6.6 dB	+1.27/–1.49 dB
Band 3, <22 GHz to Band 5		_____	6.1 dB	+1.27/–1.49 dB
Band 3, >22 GHz to Band 4		_____	7.4 dB	+1.27/–1.49 dB
Band 3, >22 GHz to Band 5		_____	6.9 dB	+1.27/–1.49 dB
Band 4 to Band 5		_____	6.7 dB	+1.48/–1.78 dB
–20 °C to 30 °C				
Band 0				
Maximum Positive Response		_____	+1.0 dB	+0.37/–0.41 dB
Maximum Negative Response	–1.0 dB	_____		+0.37/–0.41 dB
Peak-to-Peak Response		_____	1.6 dB	+0.37/–0.41 dB

ManualsPlus.com

Table 16-23 Performance Test Record (23 of 28)

Agilent Technologies

Select model: 8565E ___ 8565EC ___ Report No. _____

Serial No. _____ Date _____

Test Description	Results			Measurement Uncertainty
	Minimum	Measured	Maximum	
41. Frequency Response (continued)				
–20 °C to 30 °C (cont'd)				
Band 1				
Maximum Positive Response		_____	+1.8 dB	+0.49/–0.55 dB
Maximum Negative Response	–1.8 dB	_____		+0.49/–0.55 dB
Peak-to-Peak Response		_____	2.8 dB	+0.49/–0.55 dB
Band 2				
Maximum Positive Response		_____	+2.8 dB	+0.49/–0.56 dB
Maximum Negative Response	–2.8 dB	_____		+0.49/–0.56 dB
Peak-to-Peak Response		_____	4.4 dB	+0.49/–0.56 dB
Band 3, < 22 GHz				
Maximum Positive Response		_____	+3.5 dB	+0.53/–0.60 dB
Maximum Negative Response	–3.5 dB	_____		+0.53/–0.60 dB
Peak-to-Peak Response		_____	5.0 dB	+0.53/–0.60 dB
Band 3, > 22 GHz				
Maximum Positive Response		_____	+4.0 dB	+0.53/–0.60 dB
Maximum Negative Response	–4.0 dB	_____		+0.53/–0.60 dB
Peak-to-Peak Response		_____	4.4 dB	+0.53/–0.60 dB

ManualsPlus.com

Table 16-24 Performance Test Record (24 of 28)

Agilent Technologies

Select model: 8565E ___ 8565EC ___ Report No. _____

Serial No. _____ Date _____

Test Description	Results			Measurement Uncertainty
	Minimum	Measured	Maximum	
41. Frequency Response (continued)				
–20 °C to 30 °C (cont'd)				
Band 4				
Maximum Positive Response		_____	+3.0 dB	+0.74/–0.89 dB
Maximum Negative Response	–3.0 dB	_____		+0.74/–0.89 dB
Peak-to-Peak Response		_____	5.8 dB	+0.74/–0.89 dB
Band 5				
Maximum Positive Response		_____	+3.2 dB	+0.74/–0.89 dB
Maximum Negative Response	–3.2 dB	_____		+0.74/–0.89 dB
Peak-to-Peak Response		_____	4.8 dB	+0.74/–0.89 dB
Band 0, 100 MHz to 2.0 GHz (serial prefix ≥3641A)				
Peak-to-Peak Response		_____	1.6 dB	+0.37/–0.41 dB
Band Switching Uncertainty:				
Band 0 to Band 1		_____	3.2 dB	+0.86/–0.96 dB
Band 0 to Band 2		_____	4.0 dB	+0.86/–0.97 dB
Band 0 to Band 3, <22GHz		_____	4.3 dB	+0.90/–1.01 dB
Band 0 to Band 3, >22GHz		_____	4.0 dB	+0.90/–1.01 dB
Band 0 to Band 4		_____	4.7 dB	+1.11/–1.30 dB
Band 0 to Band 5		_____	4.2 dB	+1.11/–1.30 dB
Band 1 to Band 2		_____	4.6 dB	+0.98/–1.11 dB
Band 1 to Band 3, <22GHz		_____	4.9 dB	+1.02/–1.15 dB
Band 1 to Band 3, >22GHz		_____	4.6 dB	+1.02/–1.15dB
Band 1 to Band 4		_____	5.3 dB	+1.23/–1.44 dB

ManualsPlus.com

Table 16-25 Performance Test Record (25 of 28)

Agilent Technologies

Select model: 8565E ___ 8565EC ___ Report No. _____

Serial No. _____ Date _____

Test Description	Results			Measurement Uncertainty
	Minimum	Measured	Maximum	
41. Frequency Response (continued)				
–20 °C to 30 °C (cont'd)				
Band Switching Uncertainty: (cont'd)				
Band 1 to Band 5		_____	4.8 dB	+1.23/–1.44 dB
Band 2 to Band 3, <22GHz		_____	5.7 dB	+1.02/–1.16 dB
Band 2 to Band 3, >22GHz		_____	5.4 dB	+1.02/–1.16 dB
Band 2 to Band 4		_____	6.1 dB	+1.23/–1.45 dB
Band 2 to Band 5		_____	5.6 dB	+1.23/–1.45 dB
Band 3, <22 GHz to Band 3, >22 GHz		_____	5.7 dB	+1.06/–1.20 dB
Band 3, <22 GHz to Band 4		_____	6.4 dB	+1.27/–1.49 dB
Band 3, <22 GHz to Band 5		_____	5.9 dB	+1.27/–1.49 dB
Band 3, >22 GHz to Band 4		_____	6.1 dB	+1.27/–1.49 dB
Band 3, >22 GHz to Band 5		_____	5.6 dB	+1.27/–1.49 dB
Band 4 to Band 5		_____	6.3 dB	+1.48/–1.78 dB
42. Frequency Span Accuracy				
1 kHz SPAN	–1 %	_____	+1 %	±0.24 %
2 kHz SPAN	–1 %	_____	+1 %	±0.24 %
5 kHz SPAN	–1 %	_____	+1 %	±0.24 %
10 kHz SPAN	–1 %	_____	+1 %	±0.24 %
20 kHz SPAN	–1 %	_____	+1 %	±0.24 %
50 kHz SPAN	–1 %	_____	+1 %	±0.24 %
100 kHz SPAN	–1 %	_____	+1 %	±0.24 %
200 kHz SPAN	–1 %	_____	+1 %	±0.24 %
500 kHz SPAN	–1 %	_____	+1 %	±0.24 %
1 MHz SPAN	–1 %	_____	+1 %	±0.24 %
2 MHz SPAN	–1 %	_____	+1 %	±0.24 %

ManualsPlus.com

Table 16-26 Performance Test Record (26 of 28)

Agilent Technologies

Select model: 8565E ___ 8565EC ___ Report No. _____

Serial No. _____ Date _____

Test Description	Results			Measurement Uncertainty
	Minimum	Measured	Maximum	
42. Frequency Span Accuracy (continued)				
5 MHz SPAN	–5%	_____	+5%	±0.24%
10 MHz SPAN	–5%	_____	+5%	±0.24%
20 MHz SPAN	–5%	_____	+5%	±0.24%
50 MHz SPAN	–5%	_____	+5%	±0.24%
100 MHz SPAN	–5%	_____	+5%	±0.24%
200 MHz SPAN	–5%	_____	+5%	±0.24%
500 MHz SPAN	–5%	_____	+5%	±0.24%
46. Third Order Intermodulation Distortion				
TOI Distortion, 45 MHz				
Serial Prefix <3641A		_____	–78 dBc	+1.41/–1.43 dB
Serial Prefix ≥3641A		_____	–82 dBc	+1.41/–1.43 dB
Option H13		_____	–82 dBc	+1.41/–1.43 dB
TOI Distortion, 5 GHz		_____	–90 dBc	+2.04/–2.12 dB
TOI Distortion, 8 GHz		_____	–75 dBc	+2.04/–2.12 dB
50. Gain Compression				
Gain Compression, 2 GHz		_____	1 dB	±0.19 dB
Gain Compression, 4 GHz		_____	1 dB	±0.22 dB
Gain Compression, 7 GHz		_____	1 dB	±0.22 dB
52. 1ST LO OUTPUT Amplitude				
Maximum 1ST LO OUTPUT AMPLITUDE		_____	+18.5 dBm	±0.18 dB
Minimum 1ST LO OUTPUT AMPLITUDE	+14.5 dBm	_____		±0.18 dB

ManualsPlus.com

Table 16-27 Performance Test Record (27 of 28)

Agilent Technologies

Select model: 8565E ___ 8565EC ___ Report No. _____

Serial No. _____ Date _____

Test Description	Results			Measurement Uncertainty
	Minimum	Measured	Maximum	
53. Sweep Time Accuracy				
50 µs SWEEP TIME†	42.5 µs	_____	57.5 µs	±750 ns
100 µs SWEEP TIME†	85.0 µs	_____	115 µs	±1.5 µs
200 µs SWEEP TIME†	170 µs	_____	230 µs	±3.0 µs
500 µs SWEEP TIME†	425 µs	_____	575 µs	±7.5 µs
1 ms SWEEP TIME†	850 µs	_____	1.15 ms	±15 µs
2 ms SWEEP TIME†	1.70 ms	_____	2.30 ms	±30 µs
5 ms SWEEP TIME†	4.25 ms	_____	5.75 ms	±75 µs
10 ms SWEEP TIME†	8.50 ms	_____	11.5 ms	±150 µs
20 ms SWEEP TIME†	17.0 ms	_____	23.0 ms	±300 µs
30 ms SWEEP TIME	29.7 ms	_____	30.3 ms	±209 ns
50 ms SWEEP TIME	49.5 ms	_____	50.5 ms	±281 ns
100 ms SWEEP TIME	99.0 ms	_____	101.0 ms	±461 ns
200 ms SWEEP TIME	198.0 ms	_____	202.0 ms	±821 ns
500 ms SWEEP TIME	495.0 ms	_____	505.0 ms	±1.901 µs
1 s SWEEP TIME	990.0 ms	_____	1.010 s	±3.7 µs
2 s SWEEP TIME	1.980 s	_____	2.020 s	±7.3 µs
5 s SWEEP TIME	4.950 s	_____	5.050 s	±18.1 µs
10 s SWEEP TIME	9.900 s	_____	10.10 s	±36.1 µs
20 s SWEEP TIME	19.80 s	_____	20.20 s	±72.1 µs
50 s SWEEP TIME	49.50 s	_____	50.50 s	±180.1 µs
100 s SWEEP TIME	99.00 s	_____	101.0 s	±360.1 µs
56. Residual Responses				
200 kHz to 2.9 GHz		_____	–90 dBm	+1.24/–1.37 dB
2.9 GHz to 6.5 GHz		_____	–90 dBm	+1.24/–1.37 dB

† These entries apply only to E-Series spectrum analyzers without Option 007.

ManualsPlus.com

Table 16-28 Performance Test Record (28 of 28)

Agilent Technologies

Select model: 89565E ___ 8565EC ___ Report No. _____

Serial No. _____ Date _____

Test Description	Results			Measurement Uncertainty
	Minimum	Measured	Maximum	
57. IF INPUT Amplitude Accuracy (Non-Option 327 only)				
IF INPUT Amplitude	–31.5 dBm	_____	–28.5 dBm	+0.40/–0.44 dB
58. Gate Delay Accuracy and Gate Length Accuracy				
MIN Gate Delay	2.0000 µs	_____	4.0000 µs	±21 ns
MAX Gate Delay	2.0000 µs	_____	4.0000 µs	±21 ns
1 µs Gate Length	0.0000 ns	_____	2.0000 µs	±11 ns
65 ms Gate Length	64.999 ms	_____	65.001 ms	±752 ns
59. Delayed Sweep Accuracy				
1000 µs	999 µs	_____	1001 µs	±114 ns
2000 µs	1999 µs	_____	2001 µs	±124 ns
5000 µs	4999 µs	_____	5001 µs	±154 ns
10000 µs	9999 µs	_____	10001 µs	±204 ns
20000 µs	19999 µs	_____	20001 µs	±304 ns
50000 µs	49999 µs	_____	50001 µs	±604 ns
65000 µs	64999 µs	_____	65001 µs	±754 ns

ManualsPlus.com

ManualsPlus.com

Numerics

10 MHz ref output, 538
10 MHz reference
  operation verif software, 21

A

Add File softkey, 35
addresses
  op ver software, 25
All Tests softkey, 35
All Tests softkey menu, 31
  abort sequence, 31, 32
  list equipment, 32
  repeat sequence, 32
  repeat test, 32
  restart, 31
  single sequence, 31
  single test, 31
All Tests softkeys
  abort test, 31
attenuator switching uncertainty, 329, 608

B

bus
  dual operation, 28

C

Cal Sensor softkey, 35
calibration data, 25
  power sensor, 28
calibrator amplitude accuracy, 542
Change Entry softkey, 34
characteristics, 63, 101, 137, 138, 177, 178, 217, 218, 257, 258
computer
  operation verif software, 14
conditions file
  op ver software, 26
conditions menu softkeys, 34
  change entry, 34
  exit program, 34
  load conditions, 34
  query DUT s/n, 34
  sensor utilities softkey, 34
  store conditions, 34
  test menu, 34
  verify GPIB, 34
controller
  operation verif software, 14

D

declaration of conformity, 98, 134, 135, 173, 174, 213, 214, 254, 255, 294, 295
defaults
  op ver software, 26
delayed sweep accuracy, 890
Delete File softkey, 35
displayed average noise level, 544, 550, 556, 563, 571, 580

E

equipment
  listing from software, 32
  operation verif software, 14, 15, 16
error messages
  operation verif software, 56
Exit Program softkey, 34
exiting operation verif software, 27

F

frequency readout accuracy, 689
frequency response, 378, 394, 417, 436, 458, 723, 738, 758, 774, 793
frequency tracking range, 926

G

gain compression, 842, 845, 849, 854
gate delay accuracy, 884
gate length accuracy, 884
GPIB
  dual bus operation, 28
GPIB address
  operation verif software, 25
GPIB verification
  op ver software, 27

I

IEC declaration, 98, 135, 174, 214, 255, 295
IF alignment uncertainty, 308, 590
IF gain uncertainty, 338, 615
IF input amplitude accuracy, 881
image responses, 640, 643, 647, 651, 657, 664
ISO declaration, 98, 135, 174, 214, 255, 295

L

List Equip softkey, 35
List Files softkey, 35
LO output amplitude, 859, 863
Load Conds softkey, 34
loading operation verification software, 22

M

marker count accuracy, 689
mass storage
  operation verif software, 30
mass storage file, 26
mass storage location, 24
MEASUREMENT IS OUT OF TOLERANCE software message, 33
memory for operation verification software, 14, 24
MISSING ETE software message, 30, 32
multiple responses, 640, 643, 647, 651, 657, 664

N

noise declaration, 100, 136, 175, 215, 256, 296
noise sidebands, 633, 636

O

operation verification, 27
  10 MHz reference, 21
  alphabetic error messages, 56, 60
  BASIC binaries, 22
  BASIC programs, 22
  changing mass storage file, 30
  compatible controllers, 14
  conditions menu, 23
  controller setup, 20
  dual-bus operation, 28
  error messages, 56, 62
  frequency counter, 31
  getting started, 13
  GPIB addressing, 25
  GPIB cables, 21
  GPIB printers, 15
  introduction, 12
  loading software, 22
  loading the program, 22
  mass storage file, 24, 25, 26, 28, 29
  memory required, 14
  missing ETE, 30
  numeric error messages, 60, 61
  operating system software, 14
  power meter, 30
  power sensor cal, 32

ManualsPlus.com

power sensors, 25
required test equipment, 16
sensor data file, 29
sensor file deletion, 29
sensor file edits, 29
sensor serial number, 29
sensor utilities menu, 28, 30
serial number query, 27
test descriptions, 36, 55
test modes, 30
test record header, 24
test results, 33
variable error messages, 61, 62
verifying GPIB, 27
warmup times, 15
operation verification menus
all tests, 23
all-tests operation, 31
conditions menu, 34
sensor utilities menu, 35
test menu, 27, 35
operation verification softkeys, 34, 35
operation verification test descriptions, 36, 55
operation verification tests
test equipment per test, 15
test list, 15
tests excluded, 15, 19
option 002 performance tests
absolute amplitude and vernier accy, 897
frequency tracking range, 926
harmonic spurious outputs, 909
LO feedthrough amplitude, 919
maximum leveled output power, 900
non-harmonic spurious outputs, 913
power sweep range, 903
RF power off residuals, 906
tracking generator feedthrough, 922
tracking generator frequency accy, 929
tracking generator level flatness, 893
out of band responses, 643, 647, 651, 657, 664
out of range responses, 640, 643

P

PASS software message, 33
performance tests
calibration cycle, 299, 516
failed specification, 299, 516
recommended test equipment list, 301, 307, 523
power meter
operation verif software, 30
power sensor
operation verification, 28
power sensor utilities menu softkeys, 35
add file, 35
delete file, 35
list files, 35
system file, 35
view/edit, 35
power sensors
operation verification, 25
printer
op ver software, 27
printers
operation verif software, 15
problems
operation verif software, 30

Q

Query DUT S/N Menu softkey, 34

R

Repeat Sequence softkey, 35
Repeat Test softkey, 35
residual FM, 630
residual responses, 872, 875, 878
resolution bandwidth accuracy and selectivity, 312, 593
resolution bandwidth switching, 308, 590

S

scale fidelity, 346, 620
sensor utilities menu, 28
sensor utilities menu softkeys, 35
Sensor Utils softkey, 34
serial number, 27
setup
software tests, 21
SHORT PASS software message, 33
Single Sequence softkey, 35
Single Test softkey, 35
specifications, 63, 101, 137, 138, 177, 178, 217, 218, 257, 258
step attenuator, 307
Store Conds softkey, 34
sweep time, 540
sweep time accuracy, 866
System File softkey, 35

T

TAM functional tests, 521, 523
running TAM tests, 523
test list and required equipment, 521
test descriptions, 36, 55
10 MHz reference accy, 36
1ST LO OUTPUT amp accy, 38
calibrator amp accy, 39
displayed avg noise level, 40
fast sweep time accy, 41
frequency counter accy, 42
frequency readout, 42
frequency response, 43
frequency span accy, 45
IF gain uncertainty, 46
image and multiple responses, 47
input attn switching uncertainty, 48
noise sidebands, 49
RES BW accy and selectivity, 50
RES BW switching uncertainty, 51
residual FM, 52
scale fidelity, 53
second harmonic distortion, 54
test equipment
operation verif software, 14, 16
test menu, 30
op ver software, 27
Test Menu softkey, 34
test menu softkeys, 35
all tests, 35
calibrate sensor, 35
list equipment, 35
repeat sequence, 35
repeat test, 35
single sequence, 35
single test, 35
test procedures
1st LO output amplitude, 859, 863
absolute amplitude and vernier accy, 897
calibrator amplitude accuracy, 542
delayed sweep accuracy, 890
displayed average noise level, 544, 550, 556, 563, 571, 580
fast sweep time, 540
frequency readout accuracy/frequency count marker accuracy, 689
frequency response, 378, 394, 417, 436, 458, 723, 738, 758, 774, 793

ManualsPlus.com

frequency tracking range, 926
gain compression, 842, 845, 849, 854
gate delay and gate length accuracy, 884
harmonic spurious outputs, 909
IF gain uncertainty, 338, 615
IF input amplitude accuracy, 881
image, multiple, and out-of-band responses, 647, 651, 657, 664
image, multiple, out of range resp., 640, 643
input attenuator switching uncertainty, 329, 608
LO feedthrough amplitude, 919
maximum leveled output power, 900
noise sidebands, 633, 636
non-harmonic spurious outputs, 913
option 103 10 MHz ref output, 538
power sweep range, 903
residual FM, 630
residual responses, 872, 875, 878
resolution bandwidth accuracy and selectivity, 312, 593
resolution bandwidth switching and IF alignment uncertainty, 308, 590
RF power off residuals, 906
scale fidelity, 346, 620
sweep time accuracy, 866
third order intermodulation distortion, 484, 491, 500, 820, 826, 834
tracking generator feedthrough, 922
tracking generator freq. accy, 929
tracking generator level flatness, 893
test record header, 24
third order intermodulation distortion, 484, 491, 500, 820, 826, 834
tracking generator absolute amplitude accuracy, 897
tracking generator feedthrough, 922
tracking generator frequency accuracy, 929
tracking generator harmonic spurious outputs, 909
tracking generator level flatness, 893
tracking generator LO feedthrough amplitude, 919
tracking generator maximum output power, 900
tracking generator non-harmonic spurious outputs, 913
tracking generator power sweep range, 903
tracking generator RF power off residuals, 906
tracking generator vernier accuracy, 897

V

Verify Bus softkey, 34
View/Edit softkey, 35

W

warmup time
operation verif software, 15

ManualsPlus.com