ManualsPlus.com

Agilent Technologies 8920B
RF Communications Test Set
GPIB Programmer's Guide

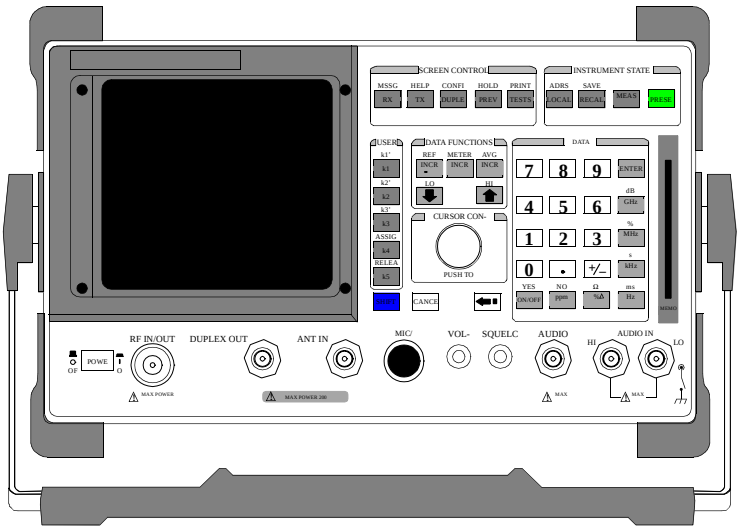

Firmware Versions: Agilent 8920B B.06.00 and above

Agilent Part Number: 08920-90222
Printed in U. S. A.
April 2000

Rev. D

ManualsPlus.com

© Copyright Agilent Technologies 1996-2000

Notice

No part of this manual may be reproduced in any form or by any means (including electronic storage and retrieval or translation into a foreign language) without prior agreement and written consent from Agilent Technologies Inc. as governed by United States and international copyright laws.

The material contained in this document is subject to change without notice. Agilent Technologies makes no warranty of any kind with regard to this material, including, but not limited to, the implied warranties of merchantability and fitness for a particular purpose. Agilent Technologies Inc. shall not be liable for errors contained herein or for incidental or consequential damages in connection with the furnishing, performance, or use of this material.

U.S. Government users will receive no greater than Limited Rights as defined in FAR 52.227-14 (June 1987) or DFAR 252.227-7015 (b)(2) (November 1995), as applicable in any technical data.

Agilent Technologies
Learning Products Department
24001 E. Mission
Liberty Lake, WA 99019-9599
U.S.A.

Trademark Acknowledgments

Microsoft®, Microsoft® Windows, and MS-DOS® are registered trademarks of Microsoft Corporation.

ProComm® is a registered trademark of DATASTORM TECHNOLOGIES, INC.

Edition/Print Date

All Editions and Updates of this manual and their creation dates are listed below.

Rev. A . . . . .October 1996

Rev. B . . . . .December 1998

Rev. C . . . . .October 1999

Rev. D . . . . .April 2000

ManualsPlus.com

Safety Summary

The following general safety precautions must be observed during all phases of operation of this instrument. Failure to comply with these precautions or with specific warnings elsewhere in this manual violates safety standards of design, manufacture, and intended use of the instrument. Agilent Technologies Inc. assumes no liability for the customer's failure to comply with these requirements.

GENERAL

This product is a Safety Class 1 instrument (provided with a protective earth terminal). The protective features of this product may be impaired if it is used in a manner not specified in the operation instructions.

All Light Emitting Diodes (LEDs) used in this product are Class 1 LEDs as per IEC 60825-1.

This product has been designed and tested in accordance with IEC Publication 1010, "Safety Requirements for Electronic Measuring Apparatus," and has been supplied in a safe condition. This instruction documentation contains information and warnings which must be followed by the user to ensure safe operation and to maintain the product in a safe condition.

ENVIRONMENTAL CONDITIONS

This instrument is intended for indoor use in an installation category II, pollution degree 2 environment. It is designed to operate at a maximum relative humidity of 95% and at altitudes of up to 2000 meters. Refer to the specifications tables for the ac mains voltage requirements and ambient operating temperature range.

Ventilation Requirements: When installing the product in a cabinet, the convection into and out of the product must not be restricted. The ambient temperature (outside the cabinet) must be less than the maximum operating temperature of the product by 4° C for every 100 watts dissipated in the cabinet. If the total power dissipated in the cabinet is greater than 800 watts, then forced convection must be used.

BEFORE APPLYING POWER

Verify that the product is set to match the available line voltage, the correct fuse is installed, and all safety precautions are taken. Note the instrument's external markings described under Safety Symbols.

ManualsPlus.com

GROUND THE INSTRUMENT

To minimize shock hazard, the instrument chassis and cover must be connected to an electrical protective earth ground. The instrument must be connected to the ac power mains through a grounded power cable, with the ground wire firmly connected to an electrical ground (safety ground) at the power outlet. Any interruption of the protective (grounding) conductor or disconnection of the protective earth terminal will cause a potential shock hazard that could result in personal injury.

FUSES

Only fuses with the required rated current, voltage, and specified type (normal blow, time delay, etc.) should be used. Do not use repaired fuses or short-circuited fuse holders. To do so could cause a shock or fire hazard.

DO NOT OPERATE IN AN EXPLOSIVE ATMOSPHERE

Do not operate the instrument in the presence of flammable gases or fumes.

DO NOT REMOVE THE INSTRUMENT COVER

Operating personnel must not remove instrument covers. Component replacement and internal adjustments must be made only by qualified service personnel.

Instruments that appear damaged or defective should be made inoperative and secured against unintended operation until they can be repaired by qualified service personnel.

WARNING: **The WARNING sign denotes a hazard. It calls attention to a procedure, practice, or the like, which, if not correctly performed or adhered to, could result in personal injury. Do not proceed beyond a WARNING sign until the indicated conditions are fully understood and met.The CAUTION sign denotes a hazard. It calls attention to an operating procedure, or the like, which, if not correctly performed or adhered to, could result in damage to or destruction of part or all of the product. Do not proceed beyond a CAUTION sign until the indicated conditions are fully understood and met.**

ManualsPlus.com

Safety Symbols

Caution, refer to accompanying documents

Warning, risk of electric shock

Earth (ground) terminal

Alternating current

Frame or chassis terminal

Standby (supply). Units with this symbol are not completely disconnected from ac mains when this switch is off.

To completely disconnect the unit from ac mains, either disconnect the power cord, or have a qualified electrician install an external switch.

Product Markings

CE - the CE mark is a registered trademark of the European Community. A CE mark accompanied by a year indicated the year the design was proven.

CSA - the CSA mark is a registered trademark of the Canadian Standards Association.

CERTIFICATION

Agilent Technologies certifies that this product met its published specifications at the time of shipment from the factory. Agilent Technologies further certifies that its calibration measurements are traceable to the United States National Institute of Standards and Technology, to the extent allowed by the Institute's calibration facility, and to the calibration facilities of other International Standards Organization members

ManualsPlus.com

Agilent Technologies Warranty Statement for Commercial Products

Agilent Technologies 8920B RF Communications Test Set

Duration of Warranty: 1 year

1 Agilent Technologies warrants Agilent Technologies hardware, accessories and supplies against defects in materials and workmanship for the period specified above. If Agilent Technologies receives notice of such defects during the warranty period, Agilent Technologies will, at its option, either repair or replace products which prove to be defective. Replacement products may be either new or like-new.

2 Agilent Technologies warrants that Agilent Technologies software will not fail to execute its programming instructions, for the period specified above, due to defects in material and workmanship when properly installed and used. If Agilent Technologies receives notice of such defects during the warranty period, Agilent Technologies will replace software media which does not execute its programming instructions due to such defects.

3 Agilent Technologies does not warrant that the operation of Agilent Technologies products will be uninterrupted or error free. If Agilent Technologies is unable, within a reasonable time, to repair or replace any product to a condition as warranted, customer will be entitled to a refund of the purchase price upon prompt return of the product.

4 Agilent Technologies products may contain remanufactured parts equivalent to new in performance or may have been subject to incidental use.

5 The warranty period begins on the date of delivery or on the date of installation if installed by Agilent Technologies. If customer schedules or delays Agilent Technologies installation more than 30 days after delivery, warranty begins on the 31st day from delivery.

6 Warranty does not apply to defects resulting from (a) improper or inadequate maintenance or calibration, (b) software, interfacing, parts or supplies not supplied by Agilent Technologies, (c) unauthorized modification or misuse, (d) operation outside of the published environmental specifications for the product, or (e) improper site preparation or maintenance.

7 TO THE EXTENT ALLOWED BY LOCAL LAW, THE ABOVE WARRANTIES ARE EXCLUSIVE AND NO OTHER WARRANTYOR CONDITION, WHETHER WRITTEN OR ORAL IS EXPRESSED OR IMPLIED AND AGILENT TECHNOLOGIES SPECIFICALLY DISCLAIMS ANY IMPLIED WARRANTIES OR CONDITIONS OR MERCHANTABILITY, SATISFACTORY QUALITY, AND FITNESS FOR A PARTICULAR PURPOSE.

ManualsPlus.com

8 Agilent Technologies will be liable for damage to tangible property per incident up to the greater of $300,000 or the actual amount paid for the product that is the subject of the claim, and for damages for bodily injury or death, to the extent that all such damages are determined by a court of competent jurisdiction to have been directly caused by a defective Agilent Technologies product.

9 TO THE EXTENT ALLOWED BY LOCAL LAW, THE REMEDIES IN THIS WARRANTY STATEMENT ARE CUSTOMER'S SOLE AND EXCLUSIVE REMEDIES. EXCEPT AS INDICATED ABOVE, IN NO EVENT WILL AGILENT TECHNOLOGIES OR ITS SUPPLIERS BE LIABLE FOR LOSS OF DATA OR FOR DIRECT, SPECIAL, INCIDENTAL, CONSEQUENTIAL (INCLUDING LOST PROFIT OR DATA), OR OTHER DAMAGE, WHETHER BASED IN CONTRACT, TORT, OR OTHERWISE.

FOR CONSUMER TRANSACTIONS IN AUSTRALIA AND NEW ZEALAND: THE WARRANTY TERMS CONTAINED IN THIS STATEMENT, EXCEPT TO THE EXTENT LAWFULLY PERMITTED, DO NOT EXCLUDE RESTRICT OR MODIFY AND ARE IN ADDITION TO THE MANDATORY STATUTORY RIGHTS APPLICABLE TO THE SALE OF THIS PRODUCT TO YOU.

ASSISTANCE

Product maintenance agreements and other customer assistance agreements are available for Agilent Technologies products. For any assistance, contact your nearest Agilent Technologies Sales and Service Office.

ManualsPlus.com

DECLARATION OF CONFORMITY

according to ISO/IEC Guide 22 and EN 45014

Manufacturer's Name:	**Agilent Technologies**
Manufacturer's Address:	**24001 E. Mission Avenue** **Liberty Lake, Washington 99019-9599** **USA**

declares that the product

Product Name:	RF Communications Test Set / Cell Site Test Set
Model Number:	Agilent Technologies 8920A, 8920B, and 8921A
Product Options:	This declaration covers all options of the above product.

conforms to the following Product specifications:

Safety: IEC 1010-1:1990+A1+A2/EN 61010-1:1993

EMC: CISPR 11:1990 / EN 55011:1991 Group 1, Class A
EN 50082-1:1992
IEC 801-2:1991 - 4 kV CD, 8 kV AD
IEC 801-3:1984 - 3V/m
IEC 801-4:1988 - 0.5 kV Sig. Lines, 1 kV Power Lines

Supplementary Information:

This is a class A product. In a domestic environment this product may cause radio interference in which case the user may be required to take adequate measures.

This product herewith complies with the requirements of the Low Voltage Directive 73/23/EEC and the EMC Directive 89/336/EEC and carries the CD-marking accordingly.

Spokane, Washington USA November 20, 1998

Vince Roland/Quality Manager

ManualsPlus.com

Table 1 Regional Sales Offices

United States of America: Agilent Technologies Test and Measurement Call Center P.O. Box 4026 Englewood, CO 80155-4026 (tel) 1 800 452 4844	Canada: Agilent Technologies Canada Inc. 5150 Spectrum Way Mississauga, Ontario L4W 5G1 (tel) 1 877 894 4414	Europe: Agilent Technologies European Marketing Organization P.O. Box 999 1180 AZ Amstelveen The Netherlands (tel) (3120) 547 9999
Japan: Agilent Technologies Japan Ltd. Measurement Assistance Center 9-1 Takakura-Cho, Hachioji-Shi, Tokyo 192-8510, Japan (tel) (81) 456-56-7832 (fax) (81) 426-56-7840	Latin America: Agilent Technologies Latin America Region Headquarters 5200 Blue Lagoon Drive, Suite #950 Miami, Florida 33126 U.S. A. (tel) (305) 267 4245 (fax) (305) 267 4286	Australia/New Zealand: Agilent Technologies Australia Pty Ltd. 347 Burwood Highway Forest Hill, Victoria 3131 Australia (tel) 1 800 629 485 (fax) (61 3) 9272 0749 New Zealand (tel) 0 800 738 378 (fax) (64 4) 802 6881
Asia Pacific: Agilent Technologies 24/F, Cityplaza One, 111 Kings Road, Taikoo Shing, Hong Kong (tel) (852) 3197 7777 (fax) (852) 2506 9233		

ManualsPlus.com

Service and Support

Any adjustment, maintenance, or repair of this product must be performed by qualified personnel. Contact your customer engineer through your local Agilent Technologies Service Center. You can find a list of local service representatives on the Web at:

http://www.agilent-tech.com/services/English/index.html

If you do not have access to the Internet, one of these centers can direct you to your nearest representative:

Table 2

United States Test and Measurement Call Center (Toll free in US)	(800) 452-4844
Europe	(31 20) 547 9900
Canada	(905) 206-4725
Japan Measurement Assistance Center	(81) 426 56 7832 |(81) 426 56 7840 (FAX)
Latin America	(305) 267 4288 (FAX)
Australia/New Zealand	1 800 629 485 (Australia) 0800 738 378 (New Zealand)
Asia-Pacific	(852) 2599 7777 (852) 2506 9285 (FAX)

ManualsPlus.com

Manufacturer's Declaration

This statement is provided to comply with the requirements of the German Sound Emission Directive, from 18 January 1991.

This product has a sound pressure emission (at the operator position) < 70 dB(A).

- Sound Pressure Lp < 70 dB(A).
- At Operator Position.
- Normal Operation.
- According to ISO 7779:1988/EN 27779:1991 (Type Test).

Herstellerbescheinigung

Diese Information steht im Zusammenhang mit den Anforderungen der Maschinenlärminformationsverordnung vom 18 Januar 1991.

- Schalldruckpegel Lp < 70 dB(A).
- Am Arbeitsplatz.
- Normaler Betrieb.
- Nach ISO 7779:1988/EN 27779:1991 (Typprüfung).

ManualsPlus.com

In this Book

Chapter 1, Using GPIB[1], describes the general guidelines for using GPIB and how to prepare the Test Set for GPIB usage. This chapter includes example programs for controlling the basic functions of the Test Set.

Chapter 2, GPIB Command Guidelines, contains information about sequential and overlapped commands, command syntax, units of measure, and measurement states. A short example program is also presented to familiarize the user with remote operation of the Test Set.

Chapter 3, GPIB Commands, contains command syntax diagrams, equivalent front-panel key commands, IEEE 488.2 Common Commands and triggering commands.

Chapter 4, Advanced Operations, includes information about increasing measurement throughput, status reporting, error reporting, service requests, instrument initialization, and passing control.

Chapter 5, Memory Cards/Mass Storage, describes the types of mass storage (RAM disk, ROM disk, external disk drives, SRAM cards, and ROM cards) and the file system formats (DOS, LIF) available in the Test Set.

Chapter 6, IBASIC Controller, describes how to develop Instrument BASIC (IBASIC) programs for use on the Test Set's built-in IBASIC Controller. Topics discussed are: interfacing to the IBASIC Controller using the serial ports, overview of the three program development methods, entering and editing IBASIC programs, program control using the PROGram Subsystem, and an introduction to writing programs for the TESTS subsystem.

Chapter 7, Programming the Call Processing Subsystem, describes how to control the Test Set's Call Processing Subsystem using the Call Processing Subsystem's remote user interface. Topics discussed are: accessing the Call Processing Subsystem screens, handling error messages, controlling program flow using the Call Processing Status Register Group, and how to query data messages received from the mobile station. Example programs are provided showing how to control the Call Processing Subsystem using service requests and register polling.

Error Messages describes the Text Only HP-IB Errors and the Numbered HP-IB Errors. This section also describes other types of error messages that the Test Set displays and where to find more information about those types of error messages.

1. GPIB was formerly called HP-IB for Hewlett-Packard instruments. Some labels on the instrument may still reflect the former HP® name.

ManualsPlus.com

Conventions Used In This Manual

The generic abbreviation "PC" is used to represent computers compatible with the IBM personal computer (PC) running the MS-DOS® operating system.

The term "workstation" is used to represent HP® 9000 Series 200/300 System Controllers.

The acronym IBASIC is used throughout this manual to refer to Instrument BASIC, a subset of the Rocky Mountain BASIC programming language. The term IBASIC Controller refers to the Test Set's built-in IBASIC Controller.

A field on the Test Set's display is represented in the following manner: **`AF Anl In.`**

A front-panel keycap is represented in the following manner: [TESTS].

When keys are pressed one-at-a-time, they are separated by commas. For example, [SHIFT], [TESTS] means to press and release the [SHIFT] key, then press and release the [TESTS] key.

When keys are pressed simultaneously, they are connected by a plus sign, +. For example, [Alt]+[P] means to hold down the [Alt] key and press [P].

Definition of Test Set

The generic term "Test Set" is used interchangeably in the manual for the Agilent 8920B.

ManualsPlus.com

ManualsPlus.com

Contents

1 Using GPIB

Overview of the Test Set 22

Getting Started 30

Remote Operation 43

Addressing 45

IEEE 488.1 Remote Interface Message Capabilities 46

Remote/Local Modes 49

2 Methods For Reading Measurement Results

Background 54

HP® BASIC ‘ON TIMEOUT’ Example Program 56

HP® BASIC ‘MAV’ Example Program 60

3 GPIB Command Guidelines

Sequential and Overlapped Commands 66

Guidelines for Operation 67

4 GPIB Commands

GPIB Syntax Diagrams 88

Adjacent Channel Power (ACP) 91

AF Analyzer 93

ManualsPlus.com

Contents

AF Generator 1 96

AF Generator 2 Pre-Modulation Filters 97

AF Generator 2/Encoder 98

Configure, I/O Configure 113

Call Processing 119

Decoder 159

Display 163

Measure 165

Oscilloscope 172

Program 177

Save/Recall Registers 178

RF Analyzer 179

RF Generator 181

Radio Interface 182

Spectrum Analyzer 183

GPIB Only Commands 185

Status 186

System 187

Tests 188

Trigger 191

ManualsPlus.com

Contents

Integer Number Setting Syntax 192

Real Number Setting Syntax 193

Multiple Real Number Setting Syntax 194

Number Measurement Syntax 195

Multiple Number Measurement Syntax 197

Equivalent Front-Panel Key Commands 198

IEEE 488.2 Common Commands 226

Common Command Descriptions 241

Triggering Measurements 258

5 Advanced Operations

Increasing Measurement Throughput 268

Status Reporting 275

GPIB Service Requests 329

Instrument Initialization 339

Passing Control 349

6 Memory Cards/Mass Storage

Default File System 360

Mass Storage Device Overview 362

ManualsPlus.com

Contents

Default Mass Storage Locations 368

Mass Storage Access 370

DOS and LIF File System Considerations 371

Using the ROM Disk 376

Using Memory Cards 377

Backing Up Procedure and Library Files 383

Copying Files Using IBASIC Commands 384

Using RAM Disk 386

Using External Disk Drives 388

7 IBASIC Controller

Introduction 390

The IBASIC Controller Screen 391

Important Notes for Program Development 393

Program Development 394

Interfacing to the IBASIC Controller using Serial Ports 396

Choosing Your Development Method 409

Method #1. Program Development on an External BASIC Language Computer 411

Method #2. Developing Programs on the Test Set Using the IBASIC EDIT Mode 417

ManualsPlus.com

Contents

Method #3. Developing Programs Using Word Processor on a PC (Least Preferred) 421

Uploading Programs from the Test Set to a PC 428

Serial I/O from IBASIC Programs 429

PROGram Subsystem 432

The TESTS Subsystem 455

8 Programming the Call Processing Subsystem

Description of the Call Processing Subsystem's Remote User Interface 462

Using the Call Processing Subsystem's Remote User Interface 465

Programming the CALL CONTROL Screen 475

Programming the AUTHENTICATION Screen 507

Programming the CALL DATA Screen 516

CALL DATA Screen Message Field Descriptions 521

Programming the CALL BIT Screen 539

CALL BIT Screen Message Field Descriptions 551

Programming the ANALOG MEAS Screen 601

Programming the CALL CONFIGURE Screen 608

Example Programs 612

ManualsPlus.com

Contents

9 Error Messages

Index 659

ManualsPlus.com

1

Using GPIB[1]

1. GPIB was formerly called HP-IB for Hewlett-Packard instruments. Some labels on the instrument may still reflect the former HP® name.

ManualsPlus.com

Overview of the Test Set

The Test Set combines up to 22 separate test instruments and an Instrument BASIC (IBASIC) Controller into one package. All of the Test Set's functions can be automatically controlled through application programs running on the built-in IBASIC Controller or on an external controller connected through GPIB.

Developing programs for the Test Set is simplified if the programmer has a basic understanding of how the Test Set operates. An overview of the Test Set's operation is best presented in terms of how information flows through the unit. The simplified block diagrams shown in **Figure 1 on page 28** and **Figure 2 on page 29** depict how instrument control information and measurement result information are routed among the Test Set's instruments, instrument control hardware, built-in IBASIC controller, and other components.

The Test Set has two operating modes: Manual Control mode and Automatic Control mode. In Manual Control mode the Test Set's operation is controlled through the front panel keypad/rotary knob. There are two Automatic Control modes: Internal and External. In Internal Automatic Control mode the Test Set's operation is controlled by an application program running on the built-in IBASIC Controller. In External Automatic Control mode the Test Set's operation is controlled by an external controller connected to the Test Set through the GPIB interface.

ManualsPlus.com

Manual Control Mode

The Test Set's primary instruments are shown on the left side of **Figure 1**. There are two classes of instruments in the Test Set: signal analyzers (RF Analyzer, AF Analyzer, Oscilloscope, Spectrum Analyzer, Signaling Decoder) and signal sources (RF Generator, AF Generator #1, AF Generator #2/Signaling Encoder). The Test Set's measurement capability can be extended by adding application specific "top boxes" such as the Agilent 83201A Dual Mode Cellular Adapter.

Since so many instruments are integrated into the Test Set, it is not feasible to have an actual "front panel" for each instrument. Therefore, each instrument's front panel is maintained in firmware and is displayed on the CRT whenever the instrument is selected. Only one instrument front panel can be displayed on the CRT at any given time (up to four measurement results can be displayed simultaneously if desired). Just as with stand alone instruments, instrument front panels in the Test Set can contain instrument setting information, measurement result(s), or data input from the DUT.

Using the Test Set in Manual Control mode is very analogous to using a set of bench or rack-mounted test equipment. To obtain a measurement result with a bench or racked system, the desired measurement must be "active." For example, if an RF power meter is in the bench or racked system and the user wishes to measure the power of an RF carrier they must turn the power meter on, and look at the front panel to see the measurement result. Other instruments in the system may be turned off but this would not prevent the operator from measuring the RF power.

Conceptually, the same is true for the Test Set. In order to make a measurement or input data from a DUT, the desired measurement field or data field must be "active." This is done by using the front panel keypad/rotary knob to select the instrument whose front panel contains the desired measurement or data field and making sure that the desired measurement or data field is turned ON.

Figure 1 shows that instrument selection is handled by the To Screen control hardware which routes the selected instrument's front panel to the CRT for display. Once an instrument's front panel is displayed on the CRT, the user can manipulate the instrument settings, such as turning a specific measurement or data field on or off, using the keypad/rotary knob. **Figure 1** also shows that instrument setup is handled by the Instrument Control hardware which routes setup information from the front panel to the individual instruments.

A GPIB/RS-232/Parallel Printer interface capability is available in the Test Set. In Manual Control mode this provides the capability of connecting an external GPIB, serial, or parallel printer to the Test Set so that display screens can be printed.

ManualsPlus.com

Internal Automatic Control Mode

In Internal Automatic Control mode the Test Set's operation is controlled by an application program running on the built-in Instrument BASIC (IBASIC) Controller. The built-in controller runs programs written in IBASIC, a subset of the HP® BASIC programming language used on the HP® 9000 Series 200/300 System Controllers. IBASIC is the only programming language supported on the built-in IBASIC Controller.

Similarities Between the Test Set's IBASIC Controller and Other Single-Tasking Controllers

The architecture of the IBASIC Controller is similar to that of other single-tasking instrumentation controllers. Only one program can be run on the IBASIC Controller at any given time. The program is loaded into RAM memory from some type of mass storage device. Five types of mass storage devices are available to the Test Set: SRAM memory cards, ROM memory cards, external disk drives connected to the GPIB interface, internal RAM disc, and internal ROM disc. Three types of interfaces are available for connecting to external instruments and equipment: GPIB, RS-232, and 16-bit parallel (available as Opt 020 Radio Interface Card).

Figure 2 shows how information is routed inside the Test Set when it is in Internal Automatic Control mode. In Manual Control mode certain Test Set resources are dedicated to manual operation. These resources are switched to the IBASIC Controller when an IBASIC program is running. These include the serial interface at select code 9, the GPIB interface at select code 7, the parallel printer interface at select code 15, and the CRT. In Manual Control mode, front panel information (instrument settings, measurement results, data input from the DUT) is routed to the CRT through the To Screen control hardware. In Internal Automatic Control mode the measurement results and data input from the DUT are routed to the IBASIC Controller through a dedicated GPIB interface. Also, in Internal Automatic Control mode, the CRT is dedicated to the IBASIC Controller for program and graphics display. This means instrument front panels cannot be displayed on the CRT when an IBASIC program is running.

ManualsPlus.com

Differences Between the Test Set's IBASIC Controller and Other Single-Tasking Controllers

The IBASIC Controller is unlike other single tasking instrumentation controllers in several ways. First, it does not have a keyboard. This imposes some limitations on creating and editing IBASIC programs directly on the Test Set. In Internal Automatic Control mode a "virtual" keyboard is available in firmware which allows the operator to enter alphanumeric data into a dedicated input field using the rotary knob. This is not the recommended programming mode for the IBASIC Controller. This feature is provided to allow user access to IBASIC programs for short edits or troubleshooting. Several programming modes for developing IBASIC programs to run on the internal IBASIC Controller are discussed in this manual.

Secondly, the IBASIC Controller has a dedicated GPIB interface, select code 8 in **Figure 2**, for communicating with the internal instruments of the Test Set. This GPIB interface is only available to the IBASIC Controller. There is no external connector for this GPIB interface. No external instruments may be added to this GPIB interface. The GPIB interface, select code 7 in **Figure 2**, is used to interface the Test Set to external instruments or to an external controller. The dedicated GPIB interface at select code 8 conforms to the IEEE 488.2 Standard in all respects but one. The difference being that each instrument on the bus does not have a unique address. The Instrument Control Hardware determines which instrument is being addressed through the command syntax. Refer to **Chapter 4, "GPIB Commands,"** for a listing of the GPIB command syntax for the Test Set.

ManualsPlus.com

External Automatic Control Mode

In External Automatic Control mode the Test Set's operation is controlled by an external controller connected to the Test Set through the GPIB interface. When in External Automatic Control mode the Test Set's internal configuration is the same as in Manual Control Mode with two exceptions:

1. Configuration and setup commands are received through the external GPIB interface, select code 7, rather than from the front-panel keypad/rotary knob.
2. The MEASure command is used to obtain measurement results and DUT data through the external GPIB interface.

Figure 1 on page 28 shows how information is routed inside the Test Set in Manual Control mode. **Figure 1 on page 28** also shows that certain Test Set resources are dedicated to the IBASIC Controller (Memory Card, ROM disk, Serial Interface #10) and are not directly accessible to the user in Manual Control Mode. In addition, **Figure 1 on page 28** shows that Serial Interface #9 and Parallel Printer Interface #15 are accessible as write-only interfaces for printing in Manual Control mode. These same conditions are true when in External Automatic Control mode. If the user wished to access these resources from an external controller, an IBASIC program would have to be run on the Test Set from the external controller.

ManualsPlus.com

Writing programs for the Test Set

One of the design goals for automatic control of the Test Set was that it operate the same way programmatically as it does manually. This is a key point to remember when developing programs for the Test Set. The benefit of this approach is that to automate a particular task, one need only figure out how to do the task manually and then duplicate the same process in software. This has several implications when designing and writing programs for the Test Set:

1. In Manual Control mode a measurement must be “active” in order to obtain a measurement result or input data from the DUT. From a programming perspective this means that before attempting to read a measurement result or to input data from the DUT, the desired screen for the measurement result or data field must be selected using the DISPlay command and the field must be in the ON state.
2. In Manual Control mode instrument configuration information is not routed through the To Screen control hardware block. From a programming perspective this means that configuration information can be sent to any desired instrument without having to first select the instrument’s front panel with the DISPlay command.

Keeping these points in mind during program development will minimize program development time and reduce problems encountered when running the program.

ManualsPlus.com

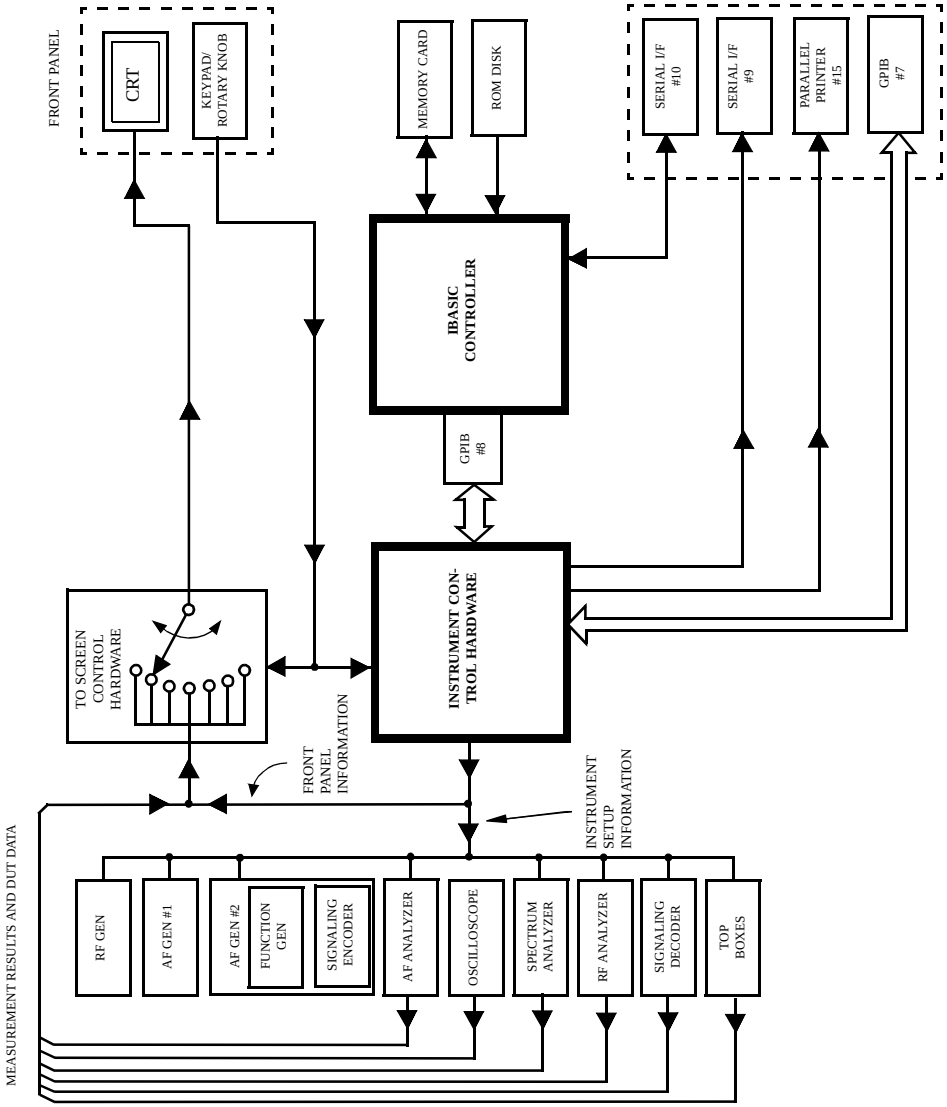

Figure 1 Manual Control Mode

ManualsPlus.com

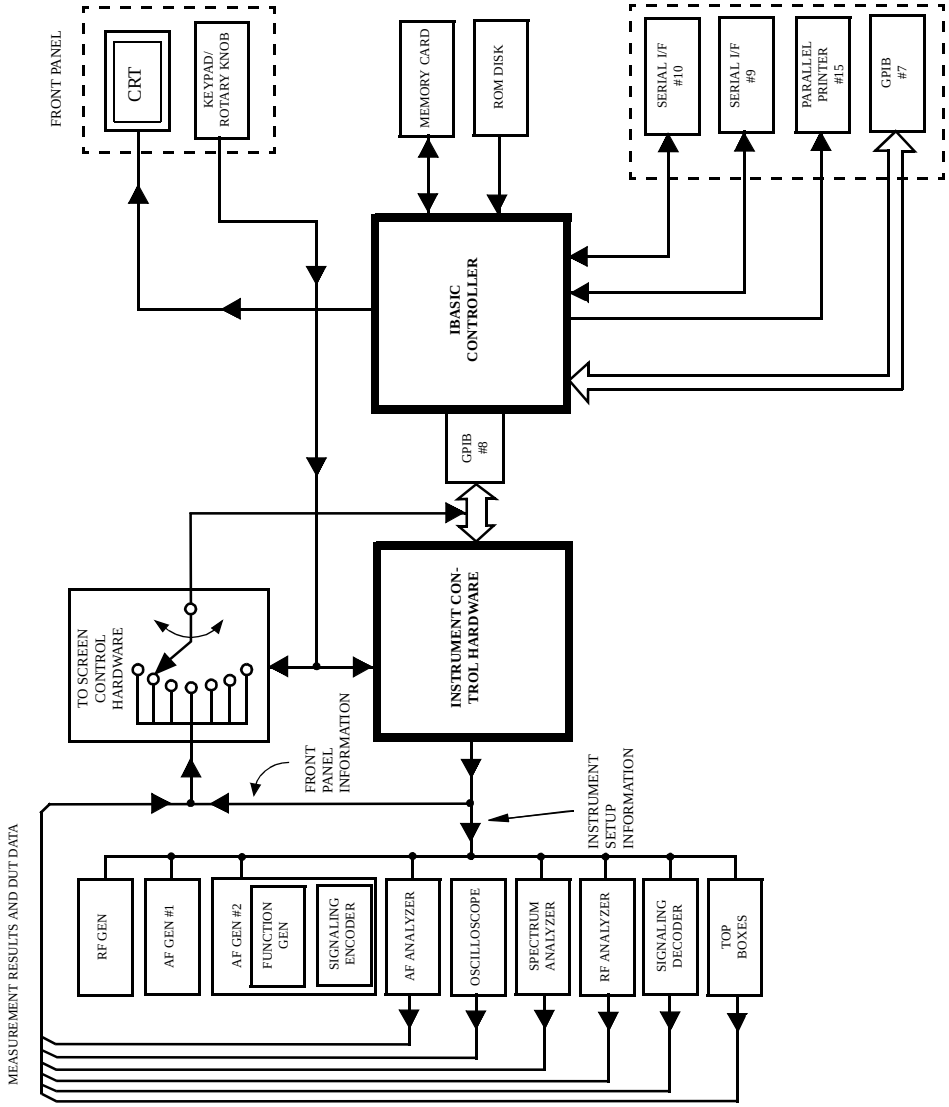

Figure 2 Internal Automatic Control Mode

ManualsPlus.com

Getting Started

What is GPIB?

The General Purpose Interface Bus (GPIB) is an implementation of the IEEE 488.1-1987 Standard Digital Interface for Programmable Instrumentation. Incorporation of the GPIB into the Test Set provides several valuable capabilities:

- Programs running in the Test Set's IBASIC Controller can control all the Test Set's functions using its internal GPIB. This capability provides a single-instrument automated test system. (The Agilent 11807 Radio Test Software utilizes this capability.)
- Programs running in the Test Set's IBASIC Controller can control other instruments connected to the external GPIB.
- An external controller, connected to the external GPIB, can remotely control the Test Set.
- A GPIB printer, connected to the external GPIB, can be used to print test results and full screen images.

ManualsPlus.com

GPIB Information Provided in This Manual

What Is Explained

- How to configure the Test Set for GPIB operation
- How to make an instrument setting over GPIB
- How to read-back instrument settings over GPIB
- How to make measurements over GPIB
- How to connect external PCs, terminals or controllers to the Test Set
- GPIB command syntax for the Test Set
- IBASIC program development
- IBASIC program transfer over GPIB
- Various advanced functions such as, increasing measurement throughput, status reporting, error reporting, pass control, and so forth

What Is Not Explained

- GPIB (IEEE 488.1, 488.2) theory of operation[1]
- GPIB electrical specifications[1]
- GPIB connector pin functions[1]
- IBASIC programming (other than general guidelines related to GPIB)[2]

1. Refer to the *Tutorial Description of the Hewlett-Packard Interface Bus* (Agilent P/N 5952-0156) for detailed information on GPIB theory and operation.
2. Refer to the *Instrument BASIC Users Handbook Version 2.0* (Agilent P/N E2083-90005) for more information on the IBASIC Version 2.0 language.

ManualsPlus.com

General GPIB Programming Guidelines

The following guidelines should be considered when developing programs which control the Test Set through GPIB:

- **Guideline #1.** Avoid using the TX TEST and RX TEST screens.

  The RX TEST and TX TEST screens are specifically designed for manual testing of land mobile FM radios and, when displayed, automatically configure six “priority” fields in the Test Set for this purpose. The priority fields and their preset values are listed in **Table 3 on page 33**. When the TX TEST screen or the RX TEST screen is displayed, certain priority fields are hidden and are not settable. The priority fields which are hidden are listed in **Table 3 on page 33**.

NOTE: When the TX TEST screen or the RX TEST screen is displayed, any GPIB commands sent to the Test Set to change the value of a hidden priority field are ignored. Hidden priority fields on the TX TEST or RX TEST screens are not settable manually or programmatically.

Displaying either of these screens automatically re-configures the 6 “priority” fields as follows:

1. When entering the RX TEST screen,

   a. the RF Generator’s **`Amplitude`** field, the **`AFGen1 To`** field and the AF Analyzer’s measurement field (measurement displayed in upper, right portion of CRT display) are

      - set to their preset values upon entering the screen for the first time since power-up, OR
      - set to their preset values if the PRESET key is selected, OR
      - set to the last setting made while in the screen

   b. the RF Generator **`Amplitude`** field and the **`AFGen1 To`** field are

      - set to their preset values whenever entering the screen, OR
      - set to their preset values if the PRESET key is selected

ManualsPlus.com

2. When entering the TX TEST screen,
   a. The **`AF Anl In`** field, the **`De-Emphasis`** field, the **`Detector`** field and the AF Analyzer Measurement field (measurement displayed in upper, right portion of CRT display) are,
      - set to their preset values upon entering the screen for the first time since power-up, OR
      - set to their preset values if the PRESET key is selected, OR
      - set to the last setting made while in the screen
   b. The AF Analyzer **`AF Anl In`**, **`De-Emphasis`** and **`Detector`** fields are,
      - set to their preset values whenever entering the screen, OR
      - set to their preset values if the PRESET key is selected

Table 3 **RX TEST Screen and TX TEST Screen Priority Field Preset Values**

Priority Field	RX TEST Screen Preset Value	Field Hidden On RX TEST Screen	TX TEST Screen Preset Value	Field Hidden On TX TEST Screen
RF Gen Amplitude	–80 dBm	No	Off	Yes
AFGen1 To	FM	No	Audio Out	Yes
AF Anl In	Audio In	Yes	FM Demod	No
Detector	RMS	Yes	Pk ± Max	No
De-emphasis	Off	Yes	750 µs	No
AF Analyzer Measurement	SINAD	No	Audio Freq	No

ManualsPlus.com

- **Guideline #2.** When developing programs to make measurements always follow this recommended sequence:

  1. Bring the Test Set to its preset state using the front-panel PRESET key. This initial step allows you to start developing the measurement sequence with most fields in a known state.
  2. Make the measurement manually using the front-panel controls of the Test Set. Record, in sequential order, the screens selected and the settings made within each screen. The record of the screens selected and settings made in each screen becomes the measurement procedure.
  3. Record the measurement result(s).

     In addition to the DISPlay command, the signaling ENCoder and DECoder require further commands to display the correct fields for each signaling mode. For example, DISP ENC;:ENC:MODE 'DTMF'.

  4. Develop the program using the measurement procedure generated in step 2. Be sure to start the programmatic measurement sequence by bringing the Test Set to its preset state using the *RST Common Command. As the measurement procedure requires changing screens, use the DISPlay command to select the desired screen followed by the correct commands to set the desired field(s).

NOTE: When IBASIC programs are running the CRT is dedicated to the IBASIC Controller for program and graphics display. This means instrument front panels are not displayed on the CRT when an IBASIC program is running. However, the DISPlay <screen> command causes all setting and measurement fields in the <screen> to be accessible programmatically. Attempting to read from a screen that has not been made accessible by the DISPlay command will cause
`HP-IB Error:-420 Query UNTERMINATED`, or
`HP-IB Error: -113 Undefined header`

  5. Make sure the desired measurement is in the ON state. This is the preset state for most measurements. However, if a previous program has set the state to OFF, the measurement will not be available. Attempting to read from a measurement field that is not in the ON state will cause **`HP-IB Error:-420 Query UNTERMINATED`**.
  6. If the trigger mode has been changed, trigger a reading.

NOTE: Triggering is set to FULL SETTling and REPetitive RETRiggering after receipt of the *RST Common Command. These settings cause the Test Set to trigger itself and a separate trigger command is not necessary.

ManualsPlus.com

7. Send the MEASure query command to initiate a reading. This will place the measured value into the Test Set's Output Queue.

NOTE: When making AF Analyzer SINAD, Distortion, Signal to Noise Ratio, AF Frequency, DC Level, or Current measurements, the measurement type must first be selected using the SELect command. For example, MEAS:AFR:SEL'SINAD' followed by MEAS:AFR:SINAD?

8. Use the ENTER statement to transfer the measured value to a variable within the context of the program.

The following example program illustrates how to make settings and then take a reading from the Test Set. This setup takes a reading from the spectrum analyzer marker after tuning it to the RF generator's output frequency.

Example

```
10  Addr=714
20  OUTPUT Addr;"*RST" !Preset to known state
30  OUTPUT Addr;"TRIG:MODE:RETR SING" !Sets single trigger
40  OUTPUT Addr;"DISP RFG" !Selects the RF Gen screen
50  OUTPUT Addr;"AFG1:FM:STAT OFF" !Turns FM OFF
60  OUTPUT Addr;"RFG:AMPL -66 DBM" !Sets RF Gen ampl to -66 dBm
70  OUTPUT Addr;"RFG:FREQ 500 MHZ" !Sets RF Gen freq to 500 MHz
80  OUTPUT Addr;"RFG:AMPL:STAT ON" !Turns RF Gen output ON
90  OUTPUT Addr;"DISP SAN"!Selects Spectrum Analyzer's screen
100 OUTPUT Addr;"SAN:CRF 500 MHZ" !Center Frequency 500 MHz
110 ! -------------------MEASUREMENT SEQUENCE-------------------
120 OUTPUT Addr;"TRIG" !Triggers reading
130 OUTPUT Addr;"MEAS:SAN:MARK:LEV?" !Query of Spectrum
140 !Analyzer's marker level
150 ENTER Addr;Lvl !Places measured value in variable Lvl
160 DISP Lvl!Displays value of Lvl
170 END
```

The RF Generator's output port and the Spectrum Analyzer's input port are preset to the RF IN/OUT port. This allows the Spectrum Analyzer to measure the RF Generator with no external connections. The Spectrum Analyzer marker is always tuned to the center frequency of the Spectrum Analyzer after preset. With the RF Generator's output port and Spectrum Analyzer input port both directed to the RF IN/OUT port, the two will internally couple with 46 dB of gain, giving a measured value of approximately -20 dBm. While not a normal mode of operation this setup is convenient for demonstration since no external cables are required. This also illustrates the value of starting from the preset state since fewer programming commands are required.

ManualsPlus.com

- **Guideline #3.** Avoid program hangs.

  If the program stops or “hangs up” when trying to ENTER a measured value, it is most likely that the desired measurement field is not available. There are several reasons that can happen:

  1. The screen where the measurement field is located has not been DISPlayed before querying the measurement field.
  2. The measurement is not turned ON.
  3. The squelch control is set too high. If a measurement is turned ON but is not available due to the Squelch setting, the measurement field contains four dashes (- - - -). This is a valid state. The Test Set is waiting for a signal of sufficient strength to unsquelch the receiver before making a measurement. If a measurement field which is squelched is queried the Test Set will wait indefinitely for the receiver to unsquelch and return a measured value.
  4. The RF Analyzer’s Input Port is set to ANT (antenna) while trying to read TX power. TX power is not measurable with the Input Port set to ANT. The TX power measurement field will display four dashes (- - - -) indicating the measurement is unavailable.
  5. The input signal to the Test Set is very unstable causing the Test Set to continuously autorange. This condition will be apparent if an attempt is made to make the measurement manually.
  6. Trigger mode has been set to single trigger (TRIG:MODE:RETRig SINGle) and a new measurement cycle has not been triggered before attempting to read the measured value.
  7. The program is attempting to make an FM deviation or AM depth measurement while in the RX TEST screen. FM or AM measurements are not available in the RX TEST screen. FM or AM measurements are made from the AF Analyzer screen by setting the **`AF Anl In`** field to FM or AM Demod.

ManualsPlus.com

- **Guideline #4.** Use single quotes and spaces properly.

  The syntax diagrams in **Chapter 4, "GPIB Commands,"** show where single quotes are needed and where spaces are needed.

Example

```
OUTPUT 714;"DISP<space>AFAN"
OUTPUT 714;"AFAN:DEMP<space>'Off'"
```

Improper use of single quotes and spaces will cause,
`HP-IB Error:-103 Invalid Separator`

- **Guideline #5.** Ensure that settable fields are active by using the STATe ON command.

  When making settings to fields that can be turned OFF with the STATe ON/OFF command (refer to the **Chapter 4, "GPIB Commands,"**), make sure the STATe is ON if the program uses that field. Note that if the STATe is OFF, just setting a numeric value in the field will not change the STATe to ON. This is different than front-panel operation whereby the process of selecting the field and entering a value automatically sets the STATe to ON. Programmatically, fields must be explicitly set to the ON state if they are in the OFF state.

  For example, the following command line would set a new AMPS ENCoder SAT tone deviation and then turn on the SAT tone (note the use of the ; to back up one level in the command hierarchy so that more than one command can be executed in a single line):

Example

```
OUTPUT 714;"ENC:AMPS:SAT:FM 2.1 KHZ;FM:STAT ON"
```

To just turn on the SAT tone without changing the current setting the following commands would be used:

```
OUTPUT 714;"ENC:AMPS:SAT:FM:STAT ON"
```

ManualsPlus.com

- **Guideline #6.** Numeric values are returned in GPIB Units or Attribute Units only.

  When querying measurements or settings through GPIB, the Test Set always returns numeric values in GPIB Units or Attribute Units, regardless of the current Display Units setting. GPIB Units, Attribute Units and Display Units determine the units-of-measure used for a measurement or setting, for example, Hz, Volts, Watts, Amperes, Ohms. Refer to **"Specifying Units-of-Measure for Settings and Measurement Results" on page 71** for further information.

  For example, if the Test Set's front panel is displaying TX Frequency as 835.02 MHz, and the field is queried through GPIB, the value returned will be 835020000 since the GPIB Units for frequency are Hz. Note that changing Display Units will not change GPIB Units or Attribute Units. Note also that setting the value of a numeric field through GPIB can be done using a variety of units-of-measure. The GPIB Units or Attribute Units for a queried value can always be determined using the :UNITs? command or :AUNits? command respectively (refer to **"Number Measurement Syntax" on page 195** or **"Multiple Number Measurement Syntax" on page 197**, for command syntax).

Control Annunciators

The letters and symbols at the top right corner of the display indicate these conditions:

- **R** indicates the Test Set is in remote mode. The Test Set can be put into the remote mode by an external controller or by an IBASIC program running on the built-in IBASIC controller.
- **L** indicates that the Test Set has been addressed to Listen.
- **T** indicates that the Test Set has been addressed to Talk.
- **S** indicates that the Test Set has sent the Require Service message by setting the Service Request (SRQ) bus line true. (See **"Status Reporting" on page 275**.)
- **C** indicates that the Test Set is currently the Active Controller on the bus.
- ***** indicates that an IBASIC program is running.
- **?** indicates that an IBASIC program is waiting for a user response.
- **-** indicates that an IBASIC program is paused.

ManualsPlus.com

Preparing the Test Set For GPIB Use

1. If other GPIB devices are in the system, attach a GPIB cable from the Test Set's rear-panel GPIB connector to any one of the other devices in the test system.
2. Access the I/O CONFIGURE screen and perform the following steps:
   a. Set the Test Set's GPIB address using the **`HP-IB Adrs`** field.
   b. Set the Test Set's GPIB Controller capability using the **`Mode`** field.

- **`Talk&Listen`** configures the Test Set to *not* be the System Controller. The Test Set has Active Controller capability (take control/pass control) in this mode. Use this setting if the Test Set will be controlled through GPIB from an external controller.
- **`Control`** configures the Test Set to be the System Controller. Use this setting if the Test Set will be the only controller on the GPIB. Selecting the Control mode automatically makes the Test Set the Active Controller.

NOTE: Only one System Controller can be configured in a GPIB system. Refer to **"Passing Control" on page 349** for further information.

3. If a GPIB printer is or will be connected to the Test Set's rear panel GPIB connector then,
   a. access the PRINT CONFIGURE screen.
   b. select one of the supported GPIB printer models using the **`Model`** field.
   c. set the **`Printer Port`** field to **`HP-IB`**.
   d. set the printer address using the **`Printer Address`** field.

ManualsPlus.com

Using the GPIB with the Test Set's built-in IBASIC Controller

The Test Set has two GPIB interfaces, an internal-only GPIB at select code 8 and an external GPIB at select code 7. The GPIB at select code 8 is only available to the built-in IBASIC Controller and is used exclusively for communication between the IBASIC Controller and the Test Set. The GPIB at select code 7 serves three purposes:

1. It allows the Test Set to be controlled by an external controller
2. It allows the Test Set to print to an external GPIB printer
3. It allows the built-in IBASIC Controller to control external GPIB devices

IBASIC programs running on the Test Set's IBASIC Controller must use the internal-only GPIB at select code 8 to control the Test Set. IBASIC programs would use the external GPIB at select code 7 to control GPIB devices connected to the rear panel GPIB connector.

NOTE: Refer to **"Overview of the Test Set" on page 22** for a detailed explanation of the Test Set's architecture.

When using a BASIC language Workstation with an GPIB interface at select code 7 to control the Test Set, GPIB commands would look like this:

Example

```
! This command is sent to the Test Set at address 14.
OUTPUT 714;"*RST"
! This command is sent to another instrument whose address is 19.
OUTPUT 719;"*RST"
```

When executing the same commands on the Test Set's IBASIC Controller, the commands would look like this:

Example

```
OUTPUT 814;"*RST"
! Command sent to internal-only GPIB at select code 8,
! Test Set's address does not change
OUTPUT 719;"*RST"
! Command sent to external GPIB at select code 7,
! other instrument's address does not change.
```

ManualsPlus.com

Basic Programming Examples

The following simple examples illustrate the basic approach to controlling the Test Set through the GPIB. The punctuation and command syntax used for these examples is given in **Chapter 4, "GPIB Commands."**.

The bus address 714 used in the following BASIC language examples assumes a GPIB interface at select code 7, and a Test Set GPIB address of 14. All examples assume an external controller is being used.

To Change a Field's Setting over GPIB

1. Use the DISPlay command to access the screen containing the field whose setting is to be changed.
2. Make the desired setting using the proper command syntax (refer to **Chapter 4, "GPIB Commands,"** for proper syntax).

The following example makes several instrument setting changes:

Example

```
OUTPUT 714;"DISP RFG" !Display the RF Generator screen.
OUTPUT 714;"RFG:FREQ 850 MHZ" !Set the RF Gen Freq to 850 MHz.
OUTPUT 714;"RFG:OUTP 'DUPL'"!Set the Output Port to Duplex.
OUTPUT 714;"DISP AFAN"!Display the AF Analyzer screen.
OUTPUT 714;"AFAN:INP 'FM DEMOD'"!Set the AF Anl In to FM Demod.
```

To Read a Field's Setting over GPIB37

1. Use the DISPlay command to access the screen containing the field whose setting is to be read.
2. Use the Query form of the syntax for that field to place the setting value into the Test Set's output buffer.
3. Enter the value into the correct variable type within the program context (refer to **Chapter 4, "GPIB Commands,"**, for proper variable type).

ManualsPlus.com

The following example reads several fields.

Example

```
OUTPUT 714;"DISP AFAN"!Display the AF Analyzer screen.
OUTPUT 714;"AFAN:INP?"!Query the AF Anl In field
ENTER 714;Af_input$ !Enter returned value into a string ariable.
OUTPUT 714;"DISP RFG"!Display the RF Generator screen
OUTPUT 714;"RFG:FREQ?"!Query the RF Gen Frequency field.
ENTER 714;Freq !Enter the returned value into a numeric variable
```

NOTE: When querying measurements or settings through GPIB, the Test Set always returns numeric values in GPIB Units or Attribute Units, regardless of the current Display Units setting. Refer to **"GPIB Units (UNITs)" on page 74** and **"Attribute Units (AUNits)" on page 77** for further information.

To Make a Simple Measurement

The basic method for making a measurement is very similar to the method used to read a field setting.

1. Use the DISPlay command to access the screen containing the desired measurement.
2. Use the MEASure form of the syntax for that measurement to place the measured value into the Test Set's output buffer.
3. Enter the value into the correct variable type within the program context (refer to **Chapter 4, "GPIB Commands,"** for proper variable type).

The following example measures the power of an RF signal.

Example

```
!Display the RF Analyzer screen.
OUTPUT 714;"DISP RFAN"
!Measure the RF power and place result in output buffer.
OUTPUT 714;"MEAS:RFR:POW?"
!Enter the measured value into a numeric variable.
ENTER 714;Tx_power
```

The above example is very simple and is designed to demonstrate the fundamental procedure for obtaining a measurement result. Many other factors must be considered when designing a measurement procedure, such as instrument settings, signal routing, settling time, filtering, triggering and measurement speed.

ManualsPlus.com

Remote Operation

The Test Set can be operated remotely through the General Purpose Interface Bus (GPIB). Except as otherwise noted, the Test Set complies with the IEEE 488.1-1987 and IEEE 488.2-1987 Standards. Bus compatibility, programming and data formats are described in the following sections.

All front-panel functions, except those listed in **Table 4**, are programmable through GPIB.

Table 4 Non-Programmable Front Panel Functions

Function	Comment
ON/OFF Power Switch	
Volume Control Knob	
Squelch Control Knob	The position of the Squelch Control knob cannot be programmed. However squelch can be programmed to either the Open or Fixed position. Refer to the Test Set's User's Guide for more information.
Cursor Control Knob	
SHIFT Key	
CANCEL Key	
YES Key	
NO Key	
ENTER Key	
Backspace (left-arrow) Key	
PREV Key	
HOLD (SHIFT, PREV Keys)	
PRINT (SHIFT, TESTS Keys)	
ADRS (SHIFT, LOCAL Keys)	
ASSIGN (SHIFT, k4 Keys)	
RELEASE (SHIFT, k5 Keys)	

ManualsPlus.com

Remote Capabilities

Conformance to the IEEE 488.1-1987 Standard

For all IEEE 488.1 functions implemented, the Test Set adheres to the rules and procedures as outlined in that Standard.

Conformance to the IEEE 488.2-1987 Standard

For all IEEE 488.2 functions implemented, the Test Set adheres to the rules and procedures as outlined in that Standard with the exception of the *OPC Common Command. Refer to the *OPC Common Command description.

IEEE 488.1 Interface Functions

The interface functions that the Test Set implements are listed in **Table 5**.

Table 5 Test Set IEEE 488.1 Interface Function Capabilities

Function	Capability
Talker	T6: No Talk Only Mode
Extended Talker	T0: No Extended Talker Capability
Listener	L4: No Listen Only Mode
Extended Listener	LE0: No Extended Listener Capability
Source Handshake	SH1: Complete Capability
Acceptor Handshake	AH1: Complete Capability
Remote/Local	RL1: Complete Capability
Service Request	SR1: Complete Capability
Parallel Poll	PP0: No Parallel Poll Capability
Device Clear	DC1: Complete Capability
Device Trigger	DT1: Complete Capability
Controller	C1: System Controller C3: Send REN C4: Respond to SRQ C11:No Pass Control to Self, No Parallel Poll
Drivers	E2: Tri-State Drivers

ManualsPlus.com

Addressing

Factory Set Address

The Test Set's GPIB address is set to decimal 14 at the factory. The address can be changed by following the instructions in **"Setting the Test Set's Bus Address" on page 45**.

Extended Addressing

Extended addressing (secondary command) capability is not implemented in the Test Set.

Multiple Addressing

Multiple addressing capability is not implemented in the Test Set.

Setting the Test Set's Bus Address

The Test Set's GPIB bus address is set using the **`HP-IB Adrs`** field which is located on the I/O CONFIGURE screen. To set the GPIB bus address; select the I/O CONFIGURE screen and position the cursor next to the **`HP-IB Adrs`** field. The address can be set from decimal 0 to 30 using the numeric DATA keys, or by pushing and then rotating the Cursor Control knob. There are no DIP switches for setting the GPIB bus address in the Test Set. The new setting is retained when the Test Set is turned off.

Displaying the Bus Address

The Test Set's GPIB bus address can be displayed by pressing and releasing the SHIFT key, then the LOCAL key. The address is displayed in the upper left-hand corner of the display screen.

ManualsPlus.com

IEEE 488.1 Remote Interface Message Capabilities

The remote interface message capabilities of the Test Set and the associated IEEE 488.1 messages and control lines are listed in **Table 6**.

Table 6 Test Set IEEE 488.1 Interface Message Capability

Message Type	Implemented	Response	IEEE 488.1 Message
Data	Yes	All front-panel functions, except those listed in **Table 4 on page 43**, are programmable. The Test Set can send status byte, message and setting information. All measurement results (except dashed "- - - -" displays) and error messages are available through the bus.	DAB END MTA MLA OTA
Remote	Yes	Remote programming mode is entered when the Remote Enable (REN) bus control line is true and the Test Set is addressed to listen. The **R** annunciator will appear in the upper-right corner of the display screen when the Test Set is in remote mode. All front-panel keys are disabled (except for the LOCAL key, POWER switch, Volume control and Squelch control knobs). When the Test Set enters remote mode the output signals and internal settings remain unchanged, except that triggering is reset to the state it was last set to in remote mode (Refer to **"Triggering Measurements" on page 258**).	REN MLA
Local	Yes	The Test Set returns to local mode (full front-panel control) when either the Go To Local (GTL) bus command is received, the front-panel LOCAL key is pressed or the REN line goes false. When the Test Set returns to local mode the output signals and internal settings remain unchanged, except that triggering is reset to TRIG:MODE:SETT FULL;RETR REP. The LOCAL key will not function if the Test Set is in the local lockout mode.	GTL MLA
Local Lockout	Yes	Local Lockout disables all front-panel keys including the LOCAL key. Only the System Controller or the POWER switch can return the Test Set to local mode (front-panel control).	LLO

ManualsPlus.com

Table 6 Test Set IEEE 488.1 Interface Message Capability (Continued)

Message Type	Implemented	Response	IEEE 488.1 Message
Clear Lockout/ Set Local	Yes	The Test Set returns to local mode (front-panel control) and local lockout is cleared when the REN bus control line goes false. When the Test Set returns to local mode the output signals and internal settings remain unchanged, except that triggering is set to TRIG:MODE:SETT FULL;RETR REP.	REN
Service Request	Yes	The Test Set sets the Service Request (SRQ) bus line true if any of the enabled conditions in the Status Byte Register, as defined by the Service Request Enable Register, are true.	SRQ
Status Byte	Yes	The Test Set responds to a Serial Poll Enable (SPE) bus command by sending an 8-bit status byte when addressed to talk. Bit 6 will be true, logic 1, if the Test Set has sent the SRQ message	SPE SPD STB MTA
Status Bit	No	The Test Set does not have the capability to respond to a Parallel Poll.	PPE PPD PPU PPC IDY
Clear	Yes	This message clears the Input Buffer and Output Queue, clears any commands in process, puts the Test Set into the Operation Complete idle state and prepares the Test Set to receive new commands. The Device Clear (DCL) or Selected Device Clear (SDC) bus commands • do not change any settings or stored data (except as noted previously) • do not interrupt front panel I/O or any Test Set operation in progress (except as noted previously) • do not change the contents of the Status Byte Register (other than clearing the MAV bit as a consequence of clearing the Output Queue). The Test Set responds equally to DCL or SDC bus commands.	DCL SDC MLA

ManualsPlus.com

Table 6 Test Set IEEE 488.1 Interface Message Capability (Continued)

Message Type	Implemented	Response	IEEE 488.1 Message
Trigger	Yes	If in remote programming mode and addressed to listen, the Test Set makes a triggered measurement following the trigger conditions currently in effect in the instrument. The Test Set responds equally to the Group Execute Trigger (GET) bus command or the *TRG Common Command.	GET MLA
Take Control	Yes	The Test Set begins to act as the Active Controller on the bus.	TCT MTA
Abort	Yes	The Test Set stops talking and listening	IFC

ManualsPlus.com

Remote/Local Modes

Remote Mode

In Remote mode all front-panel keys are disabled (except for the LOCAL key, POWER switch, Volume control and Squelch control). The LOCAL key is only disabled by the Local Lockout bus command. When in Remote mode and addressed to Listen the Test Set responds to the Data, Remote, Local, Clear (SDC), and Trigger messages. When the Test Set is in Remote mode, the **R** annunciator will be displayed in the upper right corner of the display screen and triggering is set to the state it was last set to in Remote mode (if no previous setting, the default is FULL SETTling and REPetitive RETRiggering). When the Test Set is being addressed to Listen or Talk the **L** or **T** annunciators will be displayed in the upper-right corner of the display screen.

Local Mode

In Local mode the Test Set's front-panel controls are fully operational. The Test Set uses FULL SETTling and REPetitive RETRiggering in Local mode. When the Test Set is being addressed to Listen or Talk the **L** or **T** annunciators will be displayed in the upper-right corner of the display screen.

Remote or Local Mode

When addressed to Talk in Remote or Local mode, the Test Set can issue the Data and Status Byte messages and respond to the Take Control message. In addition the Test Set can issue the Service Request Message (SRQ). Regardless of whether it is addressed to talk or listen, the Test Set will respond to the Clear (DCL), Local Lockout, Clear Lockout/Set Local, and Abort messages.

ManualsPlus.com

Local To Remote Transitions

The Test Set switches from Local to Remote mode upon receipt of the Remote message (REN bus line true and Test Set is addressed to listen). No instrument settings are changed by the transition from Local to Remote mode, but triggering is set to the state it was last set to in Remote mode (if no previous setting, the default is FULL SETTling and REPetitive RETRiggering). The **R** annunciator in the upper-right corner of the display is turned on.

When the Test Set makes a transition from local to remote mode, all currently active measurements are flagged as invalid causing any currently available measurement results to become unavailable. If the GPIB trigger mode is :RETR REP then a new measurement cycle is started and measurement results will be available for all active measurements when valid results have been obtained. If the GPIB trigger mode is :RETR SING then a measurement cycle must be started by issuing a trigger event. Refer to **"Triggering Measurements" on page 258** for more information.

Remote To Local Transitions

The Test Set switches from Remote to Local mode upon receipt of the Local message (Go To Local bus message is sent and Test Set is addressed to listen) or receipt of the Clear Lockout/Set Local message (REN bus line false). No instrument settings are changed by the transition from Remote to Local mode, but triggering is reset to FULL SETTling and REPetitive RETRiggering. The **R** annunciator in the upper right corner of the display is turned off.

If it is not in Local Lockout mode the Test Set switches from Remote to Local mode whenever the front-panel LOCAL key is pressed.

If the Test Set was in Local Lockout mode when the Local message was received, front-panel control is returned, but Local Lockout mode is not cleared. Unless the Test Set receives the Clear Lockout/Set Local message, the Test Set will still be in Local Lockout mode the next time it goes to the Remote mode.

ManualsPlus.com

Local Lockout

The Local Lockout mode disables the front-panel LOCAL key and allows return to Local mode only by commands from the System Controller (Clear Lockout/Set Local message).

When a data transmission to the Test Set is interrupted, which can happen if the LOCAL key is pressed, the data being transmitted may be lost. This can leave the Test Set in an unknown state. The Local Lockout mode prevents loss of data or system control due to someone unintentionally pressing front-panel keys.

NOTE: Return to Local mode can also be accomplished by setting the POWER switch to OFF and back to ON. However, returning to Local mode in this way has the following disadvantages:

1. It defeats the purpose of the Local Lockout mode in that the Active Controller will lose control of the test set.
2. Instrument configuration is reset to the power up condition thereby losing the instrument configuration set by the Active Controller.

Clear Lockout/Set Local

The Test Set returns to Local mode when it receives the Clear Lockout/Set Local message. No instrument settings are changed by the transition from Remote mode with Local Lockout to Local mode but triggering is reset to FULL SETTling and REPetitive RETRiggering.

ManualsPlus.com

ManualsPlus.com

2

Methods For Reading Measurement Results

ManualsPlus.com

Background

One of the most common remote user interface operations performed on an Test Set is to query and read a measurement result. Generally, this operation is accomplished by sending the query command to the Test Set, followed immediately by a request to read the requested measurement result. Using Hewlett-Packard Rocky Mountain BASIC (RMB) language, this operation would be written using the OUTPUT and ENTER command as follows:

```
OUTPUT 714;"MEAS:RFR:POW?"
```

```
ENTER 714;Power
```

Using this programming structure, the control program will stay on the ENTER statement until it is satisfied - that is - until the Test Set has returned the requested measurement result. This structure works correctly as long as the Test Set returns a valid measurement result. If, for some reason, the Test Set does not return a measurement result, the control program becomes “hung” on the ENTER statement and program execution effectively stops.

In order to prevent the control program from becoming “hung” programmers usually enclose the operation with some form of timeout function. The form of the timeout will of course depend upon the programming language being used. The purpose of the timeout is to specify a fixed amount of time that the control program will wait for the Test Set to return the requested result. After this time has expired the control program will abandon the ENTER statement and try to take some corrective action to regain control of the Test Set.

If the control program does not send the proper commands in the proper sequence when trying to regain control of the Test Set, unexpected operation will result. When this condition is encountered, power must be cycled on the Test Set to regain control.

ManualsPlus.com

This situation can be avoided entirely by:

1. sending a Selected Device Clear (SDC) interface message to put the Test Set's GPIB subsystem into a known state.
2. sending a command to terminate the requested measurement cycle.

These commands issued in this order will allow the control program to regain control of the Test Set. Any other sequence of commands will result in unexpected operation.

The following programs demonstrate a recommended technique for querying and entering data from the Test Set. This technique will prevent the Test Set from getting into a 'hung' state such that power must be cycled on the Test Set to regain manual or programmatic control.

There are a variety of programming constructs which can be used to implement this technique. In the programming examples presented, a function call is implemented which returns a numeric measurement result. The function call has two pass parameters; the query command (passed as a quoted string) and a time-out value (passed as a integer number).

The time-out value represents how long you want to wait, in seconds, for the Test Set to return a valid measurement result. If a valid measurement result is not returned by the Test Set within the time-out value, the function returns a very large number. The calling program can check the value and take appropriate action.

The program examples are written so as to be self-explanatory. In practice, the length of: variable names, line labels, function names, etc., will be implementation dependent.

ManualsPlus.com

HP® BASIC 'ON TIMEOUT' Example Program

The following example program demonstrates a recommended technique which can be utilized in situations where a measurement result timeout value of 32.767 seconds or less is adequate. In the Agilent RMB language, the timeout parameter for the ON TIMEOUT command has a maximum value of 32.767 seconds. If a timeout value of greater than 32.767 seconds is required refer to the **HP® BASIC** 'MAV' Bit Example Program.

The measurement result timeout value is defined to mean the amount of time the control program is willing to wait for the Test Set to return a valid measurement result to the control program.

Lines 10 thru 230 in this example set up a measurement situation to demonstrate the use of the recommended technique. The recommended technique is exampled in the Measure Function.

NOTE: Lines 50 and 60 should be included in the beginning of all control program. These lines are required to ensure that the Test Set is properly reset. This covers the case where the program was previously run and was stopped with the Test Set in an error condition.

ManualsPlus.com


```
10  COM /Io_names/ INTEGER Inst_addr,Bus_addr
20  CLEAR SCREEN
30  Inst_addr=714
40  Bus_addr=7
50  CLEAR Inst_addr
60  OUTPUT Inst_addr;"TRIG:ABORT"
70  OUTPUT Inst_addr;"*RST"
80  OUTPUT Inst_addr;"DISP RFAN"
90  !
100 ! Execute a call to the Measure function with a request to measure RF
110 ! power.  The time out value is specified as 10 seconds. The value
120 ! returned by the function is assigned to the variable Measure_result.
130 !
140 Measure_result=FNMeasure("MEAS:RFR:POW?",10)
150 !
160 ! Check the result of the function call.
170 !
180 IF Measure_result=9.E+99 THEN
190   PRINT "Measurement failed."
200 ELSE
210   PRINT "Power = ";Measure_result
220 END IF
230 END
240 !*********************************************************
250 ! Recommended Technique:
260 !*********************************************************
270 DEF FNMeasure(Query_command$,Time_out_value)
280   COM /Io_names/ INTEGER Inst_addr,Bus_addr
290   DISABLE
300   ON TIMEOUT Bus_addr,Time_out_value RECOVER Timed_out
310   OUTPUT Inst_addr;"TRIG:MODE:RETR SING;:TRIG:IMM"
320   OUTPUT Inst_addr;Query_command$
330   ENTER Inst_addr;Result
340   OUTPUT Inst_addr;"TRIG:MODE:RETR REP"
350   ENABLE
360   RETURN Result
370 Timed_out:!
380   ON TIMEOUT Bus_addr,Time_out_value GOTO Cannot_recover
390   CLEAR Inst_addr
400   OUTPUT Inst_addr;"TRIG:ABORT;MODE:RETR REP"
410   ENABLE
420   RETURN 9.E+99
430 Cannot_recover:!
440   DISP "Cannot regain control of Test Set."
450   STOP
460 FNEND
```

ManualsPlus.com

Comments for Recommended Routine

Table 7 Comments for Measure Function from ON TIMEOUT Example Program

Program Line Number	Comments
50	Send a Selected Device Clear (SDC) to the Test Set to put the GPIB subsystem into a known state. This allows the control program to regain programmatic control of the Test Set if it is in an error state when the program begins to run.
60	Command the Test Set to abort the currently executing measurement cycle. This will force the Test Set to stop waiting for any measurement results to be available from measurements which may be in an invalid state when the program begins to run.
290	Turn event initiated branches off (except ON END, ON ERROR and ON TIMEOUT) to ensure that the Measure function will not be exited until it is finished.
300	Set up a timeout for any I/O activity on the GPIB. This will allow the function to recover if the bus hangs for any reason.
310	Set the triggering mode to single followed by a trigger immediate command. This ensures that a new measurement cycle will be started when the TRIG:IMM command is sent. This sequence, that is: set to single trigger and then send a trigger command, guarantees that the measurement result returned to the ENTER statement will accurately reflect the state of the DUT when the TRIG:IMM command was sent. The 'IMM' keyword is optional.
320	Send the query command passed to the Measure function to the Test Set.
330	Read the measurement result.
340	Set the trigger mode to repetitive retriggering. Setting the trigger mode to repetitive will be implementation dependent.
350	Re-enable event initiated branching. If any event initiated branches were logged while the Measure function was executing they will be executed when system priority permits.

ManualsPlus.com

Table 7 Comments for Measure Function from ON TIMEOUT Example Program (Continued)

Program Line Number	Comments
360	Exit the Measure function and return the result value.
370	The following lines of code handle the case where the request for a measurement result has timed out.
380	Set up a timeout for any I/O activity on the GPIB while the control program is trying to regain control of the Test Set. This will allow the function to gracefully stop program execution if the control program cannot regain control of the Test Set. This timeout should only occur if there is some type of hardware failure, either in the Test Set or the external controller, which prevents them from communicating via GPIB.
390	Send a Selected Device Clear (SDC) to the Test Set to put the GPIB subsystem into a known state. This allows the control program to regain programmatic control of the Test Set.
400	Command the Test Set to abort the currently executing measurement cycle. Set the trigger mode back to repetitive retriggering. Setting the Test Set back to repetitive retriggering will be implementation dependent.
410	Re-enable event initiated branching. If any event initiated branches were logged while the Measure function was executing they will be executed when system priority permits.
420	Exit the Measure function and return a result value of 9.E+99.
430	The following lines of code handle the case where the control program cannot regain control of the Test Set. The actions taken in this section of the code will be implementation dependent. For the example case a message is displayed to the operator and the program is stopped.
440	Display a message to the operator that the control program cannot regain control of the Test Set.
450	Stop execution of the control program.

ManualsPlus.com

HP® BASIC 'MAV' Example Program

The following Agilent RMB example program demonstrates a technique which can be used in situations where a 32.767 measurement result timeout value is not adequate.

Measurement result timeout value is defined to mean the amount of time the control program is willing to wait for the Test Set to return a valid measurement result to the control program.

The technique uses the MAV (Message Available) bit in the Test Set's GPIB Status Byte to determine when there is data in the Output Queue. A polling loop is used to query the Status byte. The timeout duration for returning the measurement result is handled by the polling loop. An GPIB interface activity timeout is also set up to handle time-outs resulting from problems with the GPIB interface.

Lines 10 thru 230 in this example set up a measurement situation to demonstrate the use of the recommended technique. The recommended technique is exampled in the Measure Function.

NOTE: Lines 50 and 60 should be included in the beginning of all control program. These lines are required to ensure that the Test Set is properly reset. This covers the case where the program was previously run and was stopped with the Test Set in an error condition.

ManualsPlus.com


```
10  COM /Io_names/ INTEGER Inst_addr,Bus_addr
20  CLEAR SCREEN
30  Inst_addr=714
40  Bus_addr=7
50  CLEAR Inst_addr
60  OUTPUT Inst_addr;"TRIG:ABORT"
70  OUTPUT Inst_addr;"*RST"
80  OUTPUT Inst_addr;"DISP RFAN"
90   !
100 ! Execute a call to the Measure function with a request to measure RF
110 ! power.  The time out value is specified as 50 seconds. The value
120 ! returned by the function is assigned to the variable Measure_result.
130 !
140 Measure_result=FNMeasure("MEAS:RFR:POW?",50)
150 !
160 ! Check the result of the function call.
170 !
180 IF Measure_result=9.E+99 THEN
190 PRINT "Measurement failed."
200 ELSE
210 PRINT "Power = ";Measure_result
220 END IF
230 END
240 !*********************************************************
250 ! Recommended Technique:
260 !*********************************************************
270 DEF FNMeasure(Query_command$,Time_out_value)
280 COM /Io_names/ INTEGER Inst_addr,Bus_addr
290 DISABLE
300 ON TIMEOUT Bus_addr,5 GOTO Timed_out
310 OUTPUT Inst_addr;"TRIG:MODE:RETR SING;:TRIG:IMM"
320 OUTPUT Inst_addr;Query_command$
330 Start_time=TIMEDATE
340 REPEAT
350 WAIT .1
360 Status_byte=SPOLL(Inst_addr)
370 IF BIT(Status_byte,4) THEN
380 ENTER Inst_addr;Result
390 OUTPUT Inst_addr;"TRIG:MODE:RETR REP"
400 ENABLE
410 RETURN Result
420 END IF
430 UNTIL TIMEDATE-Start_time>=Time_out_value
440 Timed_out:!
450 ON TIMEOUT Bus_addr,5 GOTO Cannot_recover
460 CLEAR Inst_addr
470 OUTPUT Inst_addr;"TRIG:ABORT;MODE:RETR REP"
480 RETURN 9.E+99
490 Cannot_recover: !
500 DISP "Cannot regain control of Test Set."
510 STOP
520 FNEND
```

ManualsPlus.com

Comments for Recommended Routine

Table 8 Comments for Measure Function from MAV Example Program

Program Line Number	Comments
50	Send a Selected Device Clear (SDC) to the Test Set to put the GPIB subsystem into a known state. This allows the control program to regain programmatic control of the Test Set if it is in an error state when the program begins to run.
60	Command the Test Set to abort the currently executing measurement cycle. This will force the Test Set to stop waiting for any measurement results to be available from measurements which may be in an invalid state when the program begins to run.
290	Turn event initiated branches off (except ON END, ON ERROR and ON TIMEOUT) to ensure that the Measure function will not be exited until it is finished.
300	Set up a 5 second timeout for any I/O activity on the GPIB. This will allow the function to recover if the bus hangs for any reason. The length of the timeout will be implementation dependent.
310	Set the triggering mode to single followed by a trigger immediate command. This ensures that a new measurement cycle will be started when the TRIG:IMM command is sent. This sequence, that is: set to single trigger and then send trigger command, guarantees that the measurement result returned to the ENTER statement will accurately reflect the state of the DUT when the TRIG:IMM command was sent. The 'IMM' keyword is optional.
320	Send the query command passed to the Measure function to the Test Set.
330	Establish a start time against which to compare the measurement result timeout value passed to the Measure function.
340	Start the status byte polling loop.
350	Allow the Test Set some time (100 milliseconds) to process the measurement. When polling the Test Set the polling loop must give the Test Set time to process the requested measurement. Since GPIB command processing has a higher system priority within the Test Set than measurement functions, constantly sending GPIB commands will result in longer measurement times.

ManualsPlus.com

Table 8 Comments for Measure Function from MAV Example Program (Continued)

Program Line Number	Comments
360	Perform a serial poll to read the Status Byte from the Test Set. A serial poll is used because the *STB Common Command cannot be processed by the Test Set while a query is pending. Sending the *STB command will cause an 'HP-IB Error: -410 Query INTERRUPTED' error.
370	Check bit 4, the Message Available bit (MAV), to see if it is set to '1'. If it is, then the requested measurement result is ready.
380	Read the measurement result.
390	Set the trigger mode to repetitive retriggering. Setting the trigger mode to repetitive will be implementation dependent.
400	Re-enable event initiated branching. If any event initiated branches were logged while the Measure function was executing they will be executed when system priority permits.
410	Exit the Measure function and return the result value.
430	Check to see if the measurement result time out value has been equaled or exceeded. If it has the polling loop will be exited.
440	The following lines of code handle the case where the request for a measurement result has timed out because the polling loop has completed with no result available.
450	Set up a timeout for any I/O activity on the GPIB while the control program is trying to regain control of the Test Set. This will allow the function to gracefully stop program execution if the control program cannot regain control of the Test Set. This timeout should only occur if there is some type of hardware failure, either in the Test Set or the external controller, which prevents them from communicating via GPIB.
460	Send a Selected Device Clear (SDC) to the Test Set to put the GPIB subsystem into a known state. This allows the control program to regain programmatic control of the Test Set.
470	Command the Test Set to abort the currently executing measurement cycle. Set the trigger mode back to repetitive retriggering. Setting the Test Set back to repetitive retriggering will be implementation dependent.

ManualsPlus.com

Table 8 Comments for Measure Function from MAV Example Program (Continued)

Program Line Number	Comments
480	Exit the Measure function and return a result value of 9.E+99.
490	The following lines of code handle the case where the control program cannot regain control of the Test Set. The actions taken in this section of the code will be implementation dependent. For the example case a message is displayed to the operator and the program is stopped.
500	Display a message to the operator that the control program cannot regain control of the Test Set.
510	Stop execution of the control program.

ManualsPlus.com

3

GPIB[1] Command Guidelines

1. GPIB was formerly called HP-IB for Hewlett-Packard instruments. Some labels on the instrument may still reflect the former HP® name.

ManualsPlus.com

Sequential and Overlapped Commands

IEEE 488.2 makes the distinction between sequential and overlapped commands. Sequential commands complete their task before execution of the next command can begin. Overlapped commands can run concurrently, that is, a command following an overlapped command may begin execution while the overlapped command is still in progress. All commands in the Test Set are sequential.

The processing architecture of the Test Set allows it to accept commands through the GPIB while it is executing commands already parsed into its command buffer. While this may appear to be overlapped, commands are always executed sequentially in the order received.

The process of executing a command can be divided into three steps:

1. Command is accepted from GPIB and checked for proper structure and parameters.
2. Commands is sent to instrument hardware.
3. Instrument hardware fully responds after some time, Δt.

For example, in programming the Test Set's RF Signal Generator it takes < 150 ms after receipt of the frequency setting command for the output signal to be within 100 Hz of the desired frequency. In the Test Set, commands are considered to have "completed their task" at the end of step 2. In manual operation all displayed measurement results take into account the instrument hardware's response time. When programming measurements through GPIB the Triggering mode selected will determine whether the instrument's response time is accounted for automatically or if the control program must account for it. Refer to **"Triggering Measurements" on page 258** for a discussion of the different Trigger modes available in the Test Set and their affect on measurement results.

ManualsPlus.com

Guidelines for Operation

The following topics discuss rules and guidelines for controlling the Test Set through GPIB.

Command Names

All command names of more than four characters have an alternate abbreviated form using only upper case letters and, in some cases, a single numeral. The commands are not case sensitive. Upper and lower case characters can be used for all commands.

For example, to set the destination of AF Generator 1 to Audio Out, any of the following command strings are valid:

```
AFGENERATOR1:DESTINATION 'AUDIO OUT'
 or
afgenerator1:destination 'audio out'
 or
afg1:dest 'audio out'
 or
AFG1:DEST 'AUDIO OUT'
 or
Afg1:Dest 'Audio oUT'
```

ManualsPlus.com

Command Punctuation

NOTE: **Programming Language Considerations.** The punctuation rules for the Test Set's GPIB commands conform to the IEEE 488.2 standard. It is possible that some programming languages used on external controllers may not accept some of the punctuation requirements. It is therefore necessary that the equivalent form of the correct punctuation, as defined by the language, be used for GPIB operation. Improper punctuation will results in **`HP-IB Error: -102 Syntax Error`**.

Using Quotes for String Entries

Quotation marks ' and " are used to select a non-numeric field setting. The value is entered into the command line as a quoted alphanumeric string.

Quotes are used with all Underlined (toggling) and One-of-many (menu choice) fields. (See "Changing A Field's Setting" in chapter 1 of the *User's Guide* for field type descriptions.)

For example, to set the RF Generator's **`Output Port`** field to **`Dupl`** (duplex), the Dupl would be entered into the command string.

```
RFG:OUTP 'Dupl'
 or
RFG:OUTP "Dupl"
```

Using Spaces

When changing a field's setting, a space must always precede the setting value in the command string, regardless of the field type (command<space>value).

```
RFG:FREQ<space>850MHZ
RFG:ATT<space>'OFF'
```

ManualsPlus.com

Using Colons to Separate Commands

The GPIB command syntax is structured using a control hierarchy that is analogous to manual operation.

The control hierarchy for making a manual instrument setting using the front-panel controls is as follows: first the screen is accessed, then the desired field is selected, then the appropriate setting is made. GPIB commands use the same hierarchy. The colon (:) is used to separate the different levels of the command hierarchy.

For example, to set the AF Analyzer input gain to 40 dB, the following command syntax would be used:

```
DISP AFAN
AFAN:INP:GAIN '40 dB'
```

Using the Semicolon to Output Multiple Commands

Multiple commands can be output from one program line by separating the commands with a semicolon (;). The semicolon tells the Test Set's GPIB command parser to back up one level of hierarchy and accept the next command at the same level as the previous command.

For example, on one command line, it is possible to

1. access the AF ANALYZER screen,
2. set the AF Analyzer's Input to **`AM Demod`**
3. set Filter 1 to **`300 Hz HPF`**
4. set Filter 2 to **`3kHz LPF`**

```
DISP AFAN;AFAN:INP 'AM DEMOD';FILT1 '300Hz HPF';FILT2 '3kHz LPF'
```

The semicolon after the "DISP AFAN" command tells the Test Set's GPIB command parser that the next command is at the same level in the command hierarchy as the display command. Similarly, the semicolon after the INP 'AM DEMOD' command tells the command parser that the next command (FILT1 '300Hz HPF') is at the same command level as the INP 'AM DEMOD' command.

ManualsPlus.com

Using the Semicolon and Colon to Output Multiple Commands

A semicolon followed by a colon (;:) tells the GPIB command parser that the next command is at the top level of the command hierarchy. This allows commands from different instruments to be output on one command line. The following example sets the RF Analyzer's tune frequency to 850 MHz, and then sets the AF Analyzer's input to FM Demod.

```
RFAN:FREQ 850MHZ;:AFAN:INP 'FM DEMOD'
```

Using Question Marks to Query Setting or Measurement Fields

The question mark (?) is used to query (read-back) an instrument setting or measurement value. To generate the query form of a command, place the question mark immediately after the command. Queried information must be read into the proper variable type within the program context before it can be displayed, printed, or used as a numeric value in the program.

Queried information is returned in the same format used to set the value: queried numeric fields return numeric data; quoted string fields return quoted string information.

For example, the following BASIC language program statements query the current setting of the **`AFGen 1 To`** field:

```
!Query the AFGen1 To field
OUTPUT 714;"AFG1:DEST?"
!Enter queried value into a string variable.
ENTER 714;Afg1_to$
```

ManualsPlus.com

Specifying Units-of-Measure for Settings and Measurement Results

Numeric settings and measurement results in the Test Set can be displayed using one or more units-of-measure (V, mV, mV, Hz, kHz, MHz…). When operating the Test Set manually, the units-of-measure can be easily changed to display measurement results and field settings in the most convenient format. GPIB operation is similar to manual operation in that the units-of-measure used to display numeric data can be programmatically changed to the most convenient form.

NOTE: When querying measurements or settings through GPIB, the Test Set always returns numeric values in GPIB Units or Attribute Units, regardless of the current Display Units setting. Refer to **"GPIB Units (UNITs)" on page 74** and **"Attribute Units (AUNits)" on page 77** for further information.

There are three sets of units-of-measure used in the Test Set: Display Units, GPIB Units, and Attribute Units. Writing correct GPIB programs requires an understanding of how the Test Set deals with these different sets of units-of-measure.

Display Units (DUNits)

Display Units are the units-of-measure used by the Test Set to display numeric data (field settings and measurement results) on the front-panel *CRT display*. For example, the RF Generator's frequency can be displayed in Hz, kHz, MHz and GHz. Similarly, the measured TX Frequency can be displayed in Hz, kHz, MHz and GHz.

When evaluating an entered value for a numeric field, the Test Set interprets the data it receives in terms of the Display Units currently set. For example, if the Display Units for the **`RF Gen Freq`** field are set to GHz and the operator tries to enter 500 into the field, an **`Input value out of range`** error is generated since the Test Set interpreted the value as 500 GHz which is outside the valid frequency range of the Test Set.

ManualsPlus.com

Changing Display Units. Use the DUNits command to change the units-of-measure used by the Test Set to display any field setting or measurement result. For example, to change the Display Units setting for the **`TX Power`** measurement field from **`W`** to **`dBm`**, the following command would be used:

```
MEAS:RFR:POW:DUN DBM
```

Display Units	DUNits Command Example
GHz	`:MEAS:RFR:FREQ:ABS:DUN GHZ`
MHz	`:MEAS:RFR:FREQ:ABS:DUN MHZ`
kHz	`:MEAS:RFR:FREQ:ABS:DUN KHZ`
Hz	`:MEAS:RFR:FREQ:ABS:DUN HZ`
ppm	`:MEAS:RFR:FREQ:ERR:DUN PPM`
%D	`:MEAS:RFR:FREQ:ERR:DUN PCTDIFF`
V	`:MEAS:RFR:POW:DUN V`
mV	`:MEAS:RFR:POW:DUN MV`
mV	`:RFG:AMPL:DUN UV`
dBmV	`:RFG:AMPL:DUN DBUV`
W	`:MEAS:RFR:POW:DUN W`
mW	`:MEAS:RFR:POW:DUN MW`
dBm	`:MEAS:RFR:POW:DUN DBM`
db	`:MEAS:AFR:DISTN:DUN DB`
%	`:MEAS:AFR:DISTN:DUN PCT`
s	`:DEC:FGEN:GATE:DUN S`
ms	`:DEC:FGEN:GATE:DUN MS`

ManualsPlus.com

Reading Back Display Units Setting. Use the Display Units query command, DUNits?, to read back the current Display Units setting. For example, the following BASIC language program statements query the current Display Units setting for the **TX Power** measurement:

```
!Query Display Units setting for TX Power measurement.
OUTPUT 714;"MEAS:RFR:POW:DUNits?"
!Enter the returned value into a string variable.
ENTER 714;A$
```

The returned units-of-measure will be whatever is shown on the Test Set's front-panel display for the TX Power measurement: dBm, V, mV, dBuV, or W. All returned characters are in upper case. For example, if dBuV is displayed, DBUV is returned.

Guidelines for Display Units

- When querying a field's setting or measurement result through GPIB, the Test Set always returns numeric values in GPIB Units or Attribute Units, regardless of the field's current Display Units setting.
- The Display Units for a field's setting or measurement result can be set to any valid unit-of-measure, regardless of the field's GPIB Units or Attribute Units.
- The Display Units setting for a field's setting is not affected when changing the field's value through GPIB.

  For example, if the **AFGen1 Freq** Display Units are set to kHz, and the command AFG1:FREQ 10 HZ is sent to change AFGen1's frequency to 10 Hz, the Test Set displays **0.0100 kHz**; not 10 Hz.

ManualsPlus.com

GPIB Units (UNITs)

GPIB Units are the units-of-measure used by the Test Set when sending numeric data (field settings and measurement results) through GPIB, and the default units-of-measure for receiving numeric data (field settings and measurement results) through GPIB. Changing GPIB Units has no affect on the Display Units or Attribute Units settings. **Table 9** lists the GPIB Units used in the Test Set.

Table 9 GPIB Units

Parameter	Unit of Measure
Power	Watts (W) or dBm (DBM)
Amplitude	Volts (V), or dBµV (DBUV)
Frequency	Hertz (Hz)
Frequency Error	Hertz (HZ) or parts per million (PPM)
Time	Seconds (S)
Data Rate	Bits per second (BPS)
Current	Amperes (A)
Resistance	Ohms (OHM)
Relative Level	decibels (DB) or percent (PCT)
Marker Position	Division (DIV)
FM Modulation	Hertz (HZ)
AM Modulation	Percent (PCT)

Use the UNITs? command to determine the GPIB Units for a measurement result or field setting (refer to **“Reading-Back GPIB Units.” on page 76** for more information).

ManualsPlus.com

Changing GPIB Units. Use the UNITs command to change the GPIB Units setting for selected measurement or instrument setup fields. Only the GPIB units for power, relative level, and frequency error can be changed. **Table 10** lists the measurement and instrument setup fields which have changeable GPIB Units.

Table 10 GPIB Units That Can Be Changed

Function	Available GPIB Units
TX Power measurement	W or DBM
Adjacent Channel Power	
LRATio, URATio	DB or PCT
LLEVel, ULEVel	W or DBM
SINAD measurement	DB or PCT
DISTN measurement	DB or PCT
SNR measurement	DB or PCT
RF Generator Amplitude	W or DBM or V or DBUV
Frequency Error	HZ or PPM

For example, the following BASIC language program statements change the GPIB Units for the **`TX Power`** measurement from **`W`** to **`dBm`**:

```
OUTPUT 714;"MEAS:RFR:POW:UNIT DBM"
```

ManualsPlus.com

Reading-Back GPIB Units. Use the UNITs? command to read back the current GPIB Units setting for a measurement or instrument setup field. For example, the following BASIC language program statements read back the current GPIB Units setting for the **TX Power** measurement:

```
!Query the current GPIB Units setting for TX Power.
OUTPUT 714;"MEAS:RFR:POW:UNIT?"
!Enter the returned value into a string variable.
ENTER 714;A$
```

Guidelines for GPIB Units

- When setting the value of a numeric field (such as **AFGen1 Freq**), any non–GPIB Unit unit-of-measure must be specified in the command string, otherwise the current GPIB Unit is assumed by the Test Set.

  For example, if the command RFG:FREQ 900 is sent through GPIB, the Test Set will interpret the data as 900 Hz, since HZ is the GPIB Unit for frequency. This would result in an **Input value out of range** error. Sending the command RFG:FREQ 900 MHZ would set the value to 900 MHz.

- When querying measurements or settings through GPIB, the Test Set always returns numeric values in GPIB units, regardless of the current Display Unit setting. Numeric values are expressed in scientific notation.

  For example, if the **TX Frequency** measurement is displayed as 150.000000 MHz on the Test Set, the value returned through GPIB is 1.5000000E+008 (1.5×10^8). Converting the returned value to a format other than scientific notation must be done programmatically.

ManualsPlus.com

Attribute Units (AUNits)

Attribute Units are the units-of-measure used by the Test Set when sending or receiving numeric data through GPIB for the MEASure commands: REFerence, METer (HEND, LEND, INT), HLIMit and LLIMit (refer to **"Number Measurement Syntax" on page 195** for further details). These measurement commands are analogous to the front-panel Data Function keys: REF SET, METER, HI LIMIT and LO LIMIT respectively. Attribute Units use the same set of units-of-measure as the GPIB Units (except Frequency Error), but are only used with the MEASure commands: REFerence, METer (HEND, LEND, INT), HLIMit and LLIMit. **Table 11** lists the Attribute Units used in the Test Set.

Table 11 Attribute Units

Parameter	Unit of Measure
Power	Watts (W) or dBm (DBM)
Amplitude	Volts (V)
Frequency	Hertz (Hz)
Time	Seconds (S)
Data Rate	Bits per second (BPS)
Current	Amperes (A)
Resistance	Ohms (OHM)
Relative Level	decibels (DB) or percent (PCT)
Marker Position	Division (DIV)
FM Modulation	Hertz (HZ)
AM Modulation	Percent (PCT)

Default Data Function Values. The majority of measurements made with the Test Set can be made using the Data Functions: REF SET, METER, AVG, HI LIMIT and LO LIMIT. Measurements which can be made using the Data Functions have a black bubble with the comment "See Number Measurement Syntax" in their syntax path. If one or more of the Data Functions are not available to that measurement, the Data Function(s) not available will be listed under the black bubble (see the syntax diagram, **"Measure" on page 165**).

ManualsPlus.com

For each measurement that can be made using the Data Functions, there is a default set of values for each Data Function for that measurement.

For example, the Audio Frequency Analyzer Distortion measurement can be made using all of the Data Functions. This would include REF SET, METER, AVG, HI LIMIT and LO LIMIT. A complete listing of the Distortion measurement's Data Functions and their default values would appear as follows:

- The Attribute units are: PCT
- The number of Averages is: 10
- The Average state is: 0
- The Reference value is: 1
- The Reference Display units are: PCT
- The Reference state is: 0
- The High Limit is: 0
- The High Limit Display units are: PCT
- The High Limit state is: 0
- The Low Limit is: 0
- The Low Limit Display units are: PCT
- The Low Limit state is: 0
- The Meter state is: 0
- The Meter high end setting is: 10
- The Meter high end Display units are: PCT
- The Meter low end setting is: 0
- The Meter low end Display units are: PCT
- The Meter interval is: 10

The Data Functions are set to their default values whenever

- the power is cycled on the Test Set
- the front-panel PRESET key is selected
- the *RST Common Command is received through GPIB

ManualsPlus.com

Changing Attribute Units. The AUNits command can be used to change the Attribute Units setting for selected measurements. Only the Attribute Units for power and relative level measurements can be changed. **Table 12** lists the measurements which have changeable Attribute Units.

Table 12 Measurements with Attribute Units That Can Be Changed

Function	Available Attribute Units
TX Power measurement	W or DBM
Adjacent Channel Power	
LRATio, URATio	DB or PCT
LLEVel, ULEVel	W or DBM
SINAD measurement	DB or PCT
DISTN measurement	DB or PCT
SNR measurement	DB or PCT

Before changing the Attribute Units for a selected measurement, the Test Set verifies that all Data Function values can be properly converted from the current unit-of-measure to the new unit-of-measure. The following Data Function settings are checked:

- the Reference value
- the High Limit
- the Low Limit
- the Meter's high end setting
- the Meter's low end setting
- the Meter's interval

ManualsPlus.com

If it is not possible to properly convert all the values to the new unit-of-measure, the Attribute Units are not changed and the following error is generated:
`HP-IB Error: HP-IB Units cause invalid conversion of attr.`
This error is most often encountered when one of the Data Function values listed above is set to zero. If this error is encountered, the programmer must change the Data Function settings to values that can be converted to the new units-of-measure before sending the :AUNits command to the Test Set.

For example, the following BASIC language program statements

1. reset the Test Set
2. set the Data Function default zero values to non-zero values
3. set the Attribute Units to DB
4. then query the value of each Data Function

The units of measure for the returned values will be DB.

ManualsPlus.com

Display Units and GPIB Units are not affected when changing Attribute Units.

```
!Reset the Test Set
OUTPUT 714;"*RST"
!Set HIgh LIMIT value to 15
OUTPUT 714;"MEAS:AFR:DIST:HLIM:VAL 15"
!Set LOw LIMIT value to 1
OUTPUT 714;"MEAS:AFR:DIST:LLIM:VAL 1"
!Set the Meter Lo End value to 1
OUTPUT 714;"MEAS:AFR:DIST:MET:LEND 1"
!Set Attribute Units for Distortion measurement to DB
OUTPUT 714;"MEAS:AFR:DIST:AUN DB"
!Query the REFerence SET value
OUTPUT 714;"MEAS:AFR:DIST:REF:VAL?"
!Read the REFerence SET value into variable Ref_set_val
ENTER 714;Ref_set_val
!Query the HIgh LIMIT value
OUTPUT 714;"MEAS:AFR:DIST:HLIM:VAL?"
!Read the HIgh LIMIT value into variable Hi_limit_val
ENTER 714;Hi_limit_val
!Query the LOw LIMIT value
OUTPUT 714;"MEAS:AFR:DIST:LLIM:VAL?"
!Read the LOw LIMIT value into variable Lo_limit_val
ENTER 714;Lo_limit_val
!Query the Meter Hi End value
OUTPUT 714;"MEAS:AFR:DIST:MET:HEND?"
!Read the Meter Hi End value into variable Met_hiend_val
ENTER 714;Met_hiend_val
!Query the Meter Lo End value
OUTPUT 714;"MEAS:AFR:DIST:MET:LEND?"
!Read the Meter Lo End value into variable Met_loend_val
ENTER 714;Met_loend_val
!Query the Meter interval
OUTPUT 714;"MEAS:AFR:DIST:MET:INT?"
!Read the Meter interval into! variable Met_int_val
ENTER 714;Met_int_val
```

ManualsPlus.com

Reading-back Attribute Units.

Use the AUNits? command to read back the Attribute Units setting for the selected measurement. For example, the following BASIC language program statements show how the AUNits? command can be used to read-back a Distortion REFerence SET level:

```
!Query the REFerence SET value for the Distortion measurement
OUTPUT 714;"MEAS:AFR:DIST:REF:VAL?"
!Read the REFerence SET value into variable Ref_set_val
ENTER 714;Ref_set_val
!Query the Attribute Units setting for the Distortion measurement
OUTPUT 714;"MEAS:AFR:DIST:AUN?"
!Read the Attribute Units setting into string variable Atribute_set$
ENTER 714;Atribute_set$
!Print out the variables in the form <VALUE><UNITS>
PRINT Ref_set_val;Atribute_set$
```

If a reference of 25% is set, 25 PCT would be printed.

Guidelines for Attribute Units

- When setting the value of measurement functions REFerence, METer, HLIMit and LLIMit through GPIB, a non–Attribute Unit unit-of-measure must be specified in the command string, otherwise the current Attribute Unit is assumed by the Test Set.

  For example, if the Test Set is in a RESET condition and the command MEAS:AFR:DIST:REF:VAL 10 is sent through GPIB, the Test Set will interpret the data as 10 %, since % is the RESET Attribute Unit for the Distortion measurement. Sending the command, MEAS:AFR:DIST:REF:VAL 10 DBM, would set the REFerence SET value to 10 dB.

- When querying measurement functions REFerence, METer, HLIMit and LLIMit through GPIB, the Test Set always returns numeric values in Attribute Units, regardless of the current Display Units or GPIB Units settings. Numeric values are expressed in scientific notation.

  For example, if the **REF SET** measurement function is displayed as 25% on the Test Set, the value returned through GPIB is +2.50000000E+001 (2.5×10^1). Converting the returned value to a format other than scientific notation must be done programmatically.

- Before changing the Attribute Units for a selected measurement, the Test Set verifies that all Data Function values can be properly converted from the current unit-of-measure to the new unit-of-measure. If it is not possible to properly convert all the values to the new unit-of-measure, the Attribute Units are not changed and the following error is generated: **HP-IB Error: HP-IB Units cause invalid conversion of attr.**

ManualsPlus.com

Using the STATe Command

The STATe command corresponds to the front-panel ON/OFF key and is used to programmatically turn measurements, instrument functions, and data functions ON or OFF.

Turning measurements, instrument functions and data functions ON/OFF

Use 1 or ON to turn measurements, instrument functions, or data functions ON. Use 0 or OFF to turn measurements, instrument functions, or data functions OFF.

For example, the following BASIC language statements illustrate the use of the STATe command to turn several measurements, instrument functions, and data functions ON and OFF:

```
!Turn off FM source AFG1. *
OUTPUT 714;"AFG1:FM:STAT OFF"
!Turn off REFerence SET data function
OUTPUT 714;"MEAS:AFR:DISTN:REF:STAT OFF"
!Turn off TX Power measurement
OUTPUT 714;"MEAS:RFR:POW:STAT 0"
!Turn on REF SET measurement function for FM Deviation measurement
OUTPUT 714;"MEAS:AFR:FM:REF:STAT ON"
```

*This assumes the **`AFGen1 To`** field is set to FM.

ManualsPlus.com

Reading back the measurement, instrument function, or data function state

Use the query form of the command, STATe?, to determine the current state of a measurement, instrument function or data function. If a measurement, instrument function, or data function is queried, the returned value will be either a “1” (ON) or a “0” (OFF).

For example, the following BASIC language statements illustrate the use of the STATe? command to determine the current state of the TX Power measurement:

```
!Query the state of the TX Power measurement
OUTPUT 714;"MEAS:RFR:POW:STAT?"
ENTER 714;State_on_off
IF State_on_off = 1 THEN DISP "TX Power Measurement is ON"
IF State_on_off = 0 THEN DISP "TX Power Measurement is OFF
```

STATe Command Guidelines

- Measurements that are displayed as numbers, or as analog meters using the METER function, can be turned on and off.
- The data functions REFerence, METer, HLIMit, and LLIMit can be turned on and off.
- Any instrument function that generates a signal can be turned on and off. This includes the RF Generator, Tracking Generator, AF Generator 1, AF Generator 2, and the Signaling Encoder.
- The Oscilloscope’s trace cannot be turned off.
- The Spectrum Analyzer’s trace cannot be turned off.

ManualsPlus.com

Sample GPIB Program

The following program was written on an HP® 9000 Series 300 controller using Rocky Mountain BASIC (RMB). To run this program directly in the Test Set's IBASIC Controller make the following modifications:

1. Use exclamation marks (!) to comment-out lines 440, 450, and 460 (these commands not supported in IBASIC).
2. Change line 70 to Bus = 8 (internal GPIB select code = 8).

```
10 ! This program generates an FM carrier, measures and displays the
20 !deviation, and draws the modulation waveform from the
30 !oscilloscope to the CRT display. For demonstration purposes the
40 ! carrier is generated and analyzed through the uncalibrated input
50! path so that no external cables are required.
60 GCLEAR !Clear graphics display.
70 Bus=7 ! Interface select code of GPIB interface
80 Dut=100*Bus+14 ! Default Test Set GPIB address is 14
90 CLEAR Bus  ! Good practice to clear the bus
100 CLEAR SCREEN ! Clear the CRT
110 OUTPUT Dut;"*RST" ! Preset the Test Set
120 OUTPUT Dut;"DISP DUPL" ! Display the DUPLEX TEST screen
130 OUTPUT Dut;"RFG:AMPL -14 DBM" ! Set RF Gen Amptd to -14 dBm
140 OUTPUT Dut;"AFAN:INP 'FM Demod'"
150 ! Set AF Analyzer's input to FM Demod
160 OUTPUT Dut;"AFAN:DET 'Pk+-Max'"
170 ! Set AF Analyzer's detector to Peak +/-Max
180 ! The following trigger guarantees the instrument will auto-tune
190 !and auto-range to the input signal before measuring.
200 OUTPUT Dut;"TRIG"! Trigger all active measurements
210 OUTPUT Dut;"MEAS:AFR:FM?" ! Request an FM deviation measurement
220 ENTER Dut;Dev ! Read measured value into variable Dev
230 PRINT USING "K,D.DDD,K";"Measured FM = ",Dev/1000," kHz peak."
240 DISP "'Continue' when ready..." ! Set up user prompt
245 ! Set up interrupt on softkey 1
250 ON KEY 1 LABEL "Continue",15 GOTO Proceed
260 LOOP! Loop until the key is pressed
270 END LOOP
280 Proceed: OFF KEY! Turn off interrupt from softkey 1
290 DISP "! Clear the user prompt
300 !
310 !Measure and plot oscilloscope trace to see the waveform shape.
320 DIM Trace(0:416)! Oscilloscope has 417 trace points
330 OUTPUT Dut;"DISP OSC"   Display the Oscilloscope screen
340 OUTPUT Dut;"TRIG"! Trigger all active measurements
350 OUTPUT Dut;"MEAS:OSC:TRAC?"
360 !Request the oscilloscope trace
370 ENTER Dut;Trace(*)
```

ManualsPlus.com


```
380 ! Read the oscilloscope trace into array Trace(*)
390 ! CRT is (X,Y)=(0,0) in lower left corner
400 !to (399,179) upper right.
410 ! (Each pixel is about 0.02 mm wide by 0.03 mm tall, not square.)
420 ! Scale vertically for 0 kHz dev center-screen and +4 kHz dev top
430 ! of screen.  Leave the next three lines for external control, or
440 ! comment them out for IBASIC (Test Set stand-alone) control.
450 !
460 PLOTTER IS CRT,"98627A"
470 !Your display may have a different specifier.
480 GRAPHICS ON!Enable graphics to plot the waveform.
490 WINDOW 0,399,0,179
500 !
510 PEN 1 !Turn on drawing pen
520 MOVE 0,89.5+Trace(0)/4000*89.5
530 FOR I=1 TO 416
540 DRAW I/416*399,89.5+Trace(I)/4000*89.5
550 NEXT I
560 END
```

ManualsPlus.com

4

GPIB Commands

ManualsPlus.com

GPIB Syntax Diagrams

GPIB Command Syntax Diagram Listing

Instrument Command Syntax Diagrams

AF Analyzer (AFAN), **page 93**.
AF Generator 1 (AFG1), **page 96**.
AF Generator 2 (AFG2) - Pre-Modulation Filters, **page 97**.
AF Generator 2 and Encoder (AFG2, ENC), **page 98**.
- AFG2:AMPS, **page 99**.
- AFG2:CDCSs, **page 103**.
- AFG2:DPAGing, **page 104**.
- AFG2:DTMF, **page 103**.
- AFG2:EDACs, **page 110**.
- AFG2:FGENerator, **page 106**.
- AFG2:LTR, **page 109**.
- AFG2:MPT1327, **page 111**.
- AFG2:NAMPs, **page 101**.
- AFG2:NMT, **page 107**.
- AFG2:NTACs, **page 101**.
- AFG2:TACS, **page 99**.
- AFG2:TSEQuential, **page 106**.

Adjacent Channel Power (ACP), **page 91**.
Call Process(CALLP), **page 122**.
Decoder (DEC), **page 159**.
- DEC:AMPS, **page 161**.
- DEC:CDCSs, **page 161**.
- DEC:DPAGing, **page 161**.
- DEC:DTMF, **page 161**.
- DEC:EDACs, **page 160**.
- DEC:FGENerator, **page 161**.
- DEC:LTR, **page 162**.
- DEC:MPT1327, **page 162**.
- DEC:NAMPs, **page 160**.
- DEC:NTACs, **page 160**.
- DEC:TACS, **page 161**.
- DEC:TSEQuential, **page 162**.

Oscilloscope (OSC), **page 172**.
RF Analyzer (RFA), **page 179**.
RF Generator (RFG), **page 181**.
Radio Interface (RINT), **page 182**.
Spectrum Analyzer (SAN), **page 183**.

ManualsPlus.com

Instrument Command Number Setting Syntax Diagrams

Integer Number Setting Syntax, **page 192**.
Real Number Setting Syntax, **page 193**.
Multiple Real Number Setting Syntax, **page 194**.

Measurement Command Syntax Diagrams

Measure (MEAS), **page 165**.
Trigger (TRIG), **page 191**.

Measurement Command Number Setting Syntax Diagrams

Number Measurement Syntax, **page 195**.
Multiple Number Measurement Syntax, **page 197**.

Instrument Function Syntax Diagrams

Configure and I/O Configure (CONF), **page 113**.
Display (DISP), **page 163**.
Program (PROG), **page 177**.
Save/Recall Registers (REG), **page 178**.
Status (STAT), **page 186**.
System (SYS), **page 187**.
Tests (TEST), **page 188**.

GPIB Only Command Syntax Diagram

Special (SPEC), **page 185**.

ManualsPlus.com

Diagram Conventions

Use the following diagram to see the conventions used in the syntax diagrams.

Statement elements are connected by lines. Each line can be followed in only one direction, as indicated by the arrow at the end of the line. Any combination of statement elements that can be generated by starting at the root element and following the line the proper direction is syntactically correct. An element is optional if there is a path around it. The drawings show the proper use of spaces. Where spaces are required they are indicated by a hexagon with the word “space” in it, otherwise no spaces are allowed between statement elements.

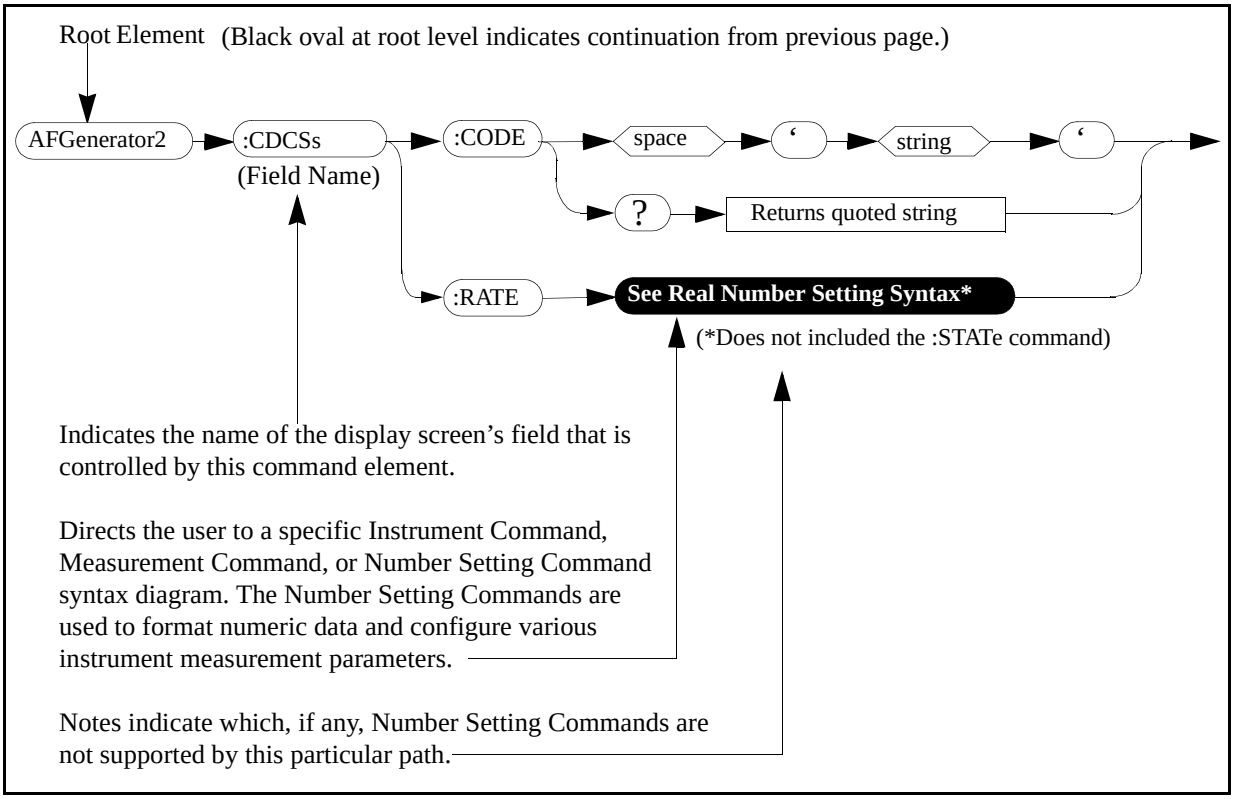

ManualsPlus.com

Adjacent Channel Power (ACP)

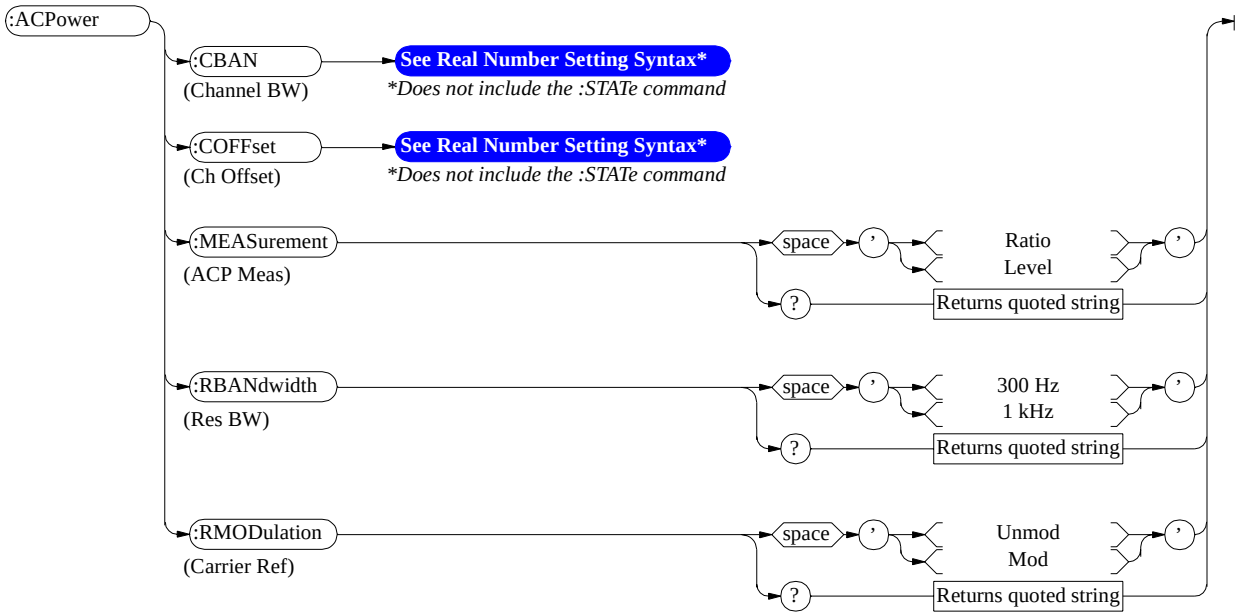

ManualsPlus.com

ManualsPlus.com

AF Analyzer

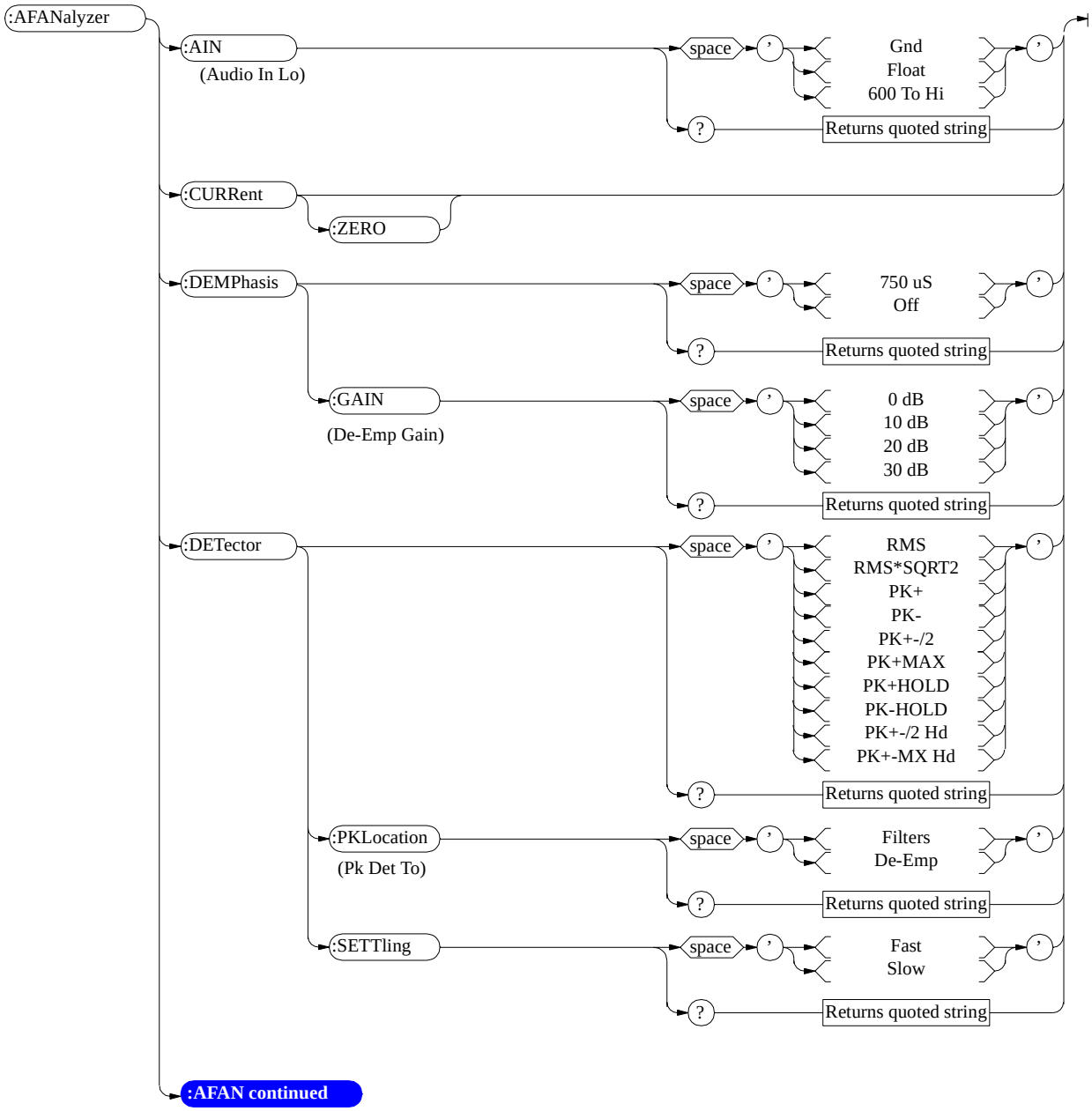

ManualsPlus.com

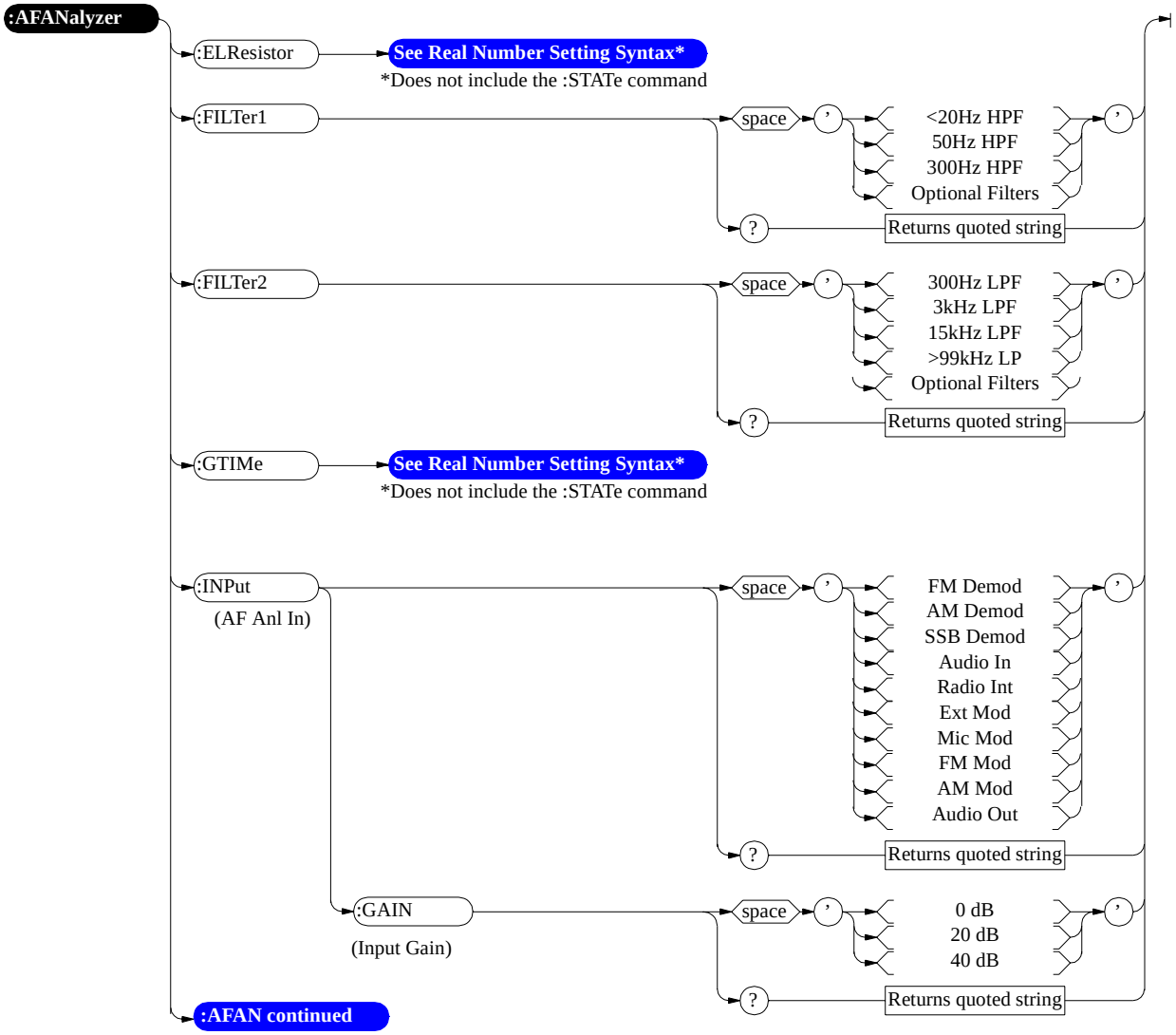

ManualsPlus.com

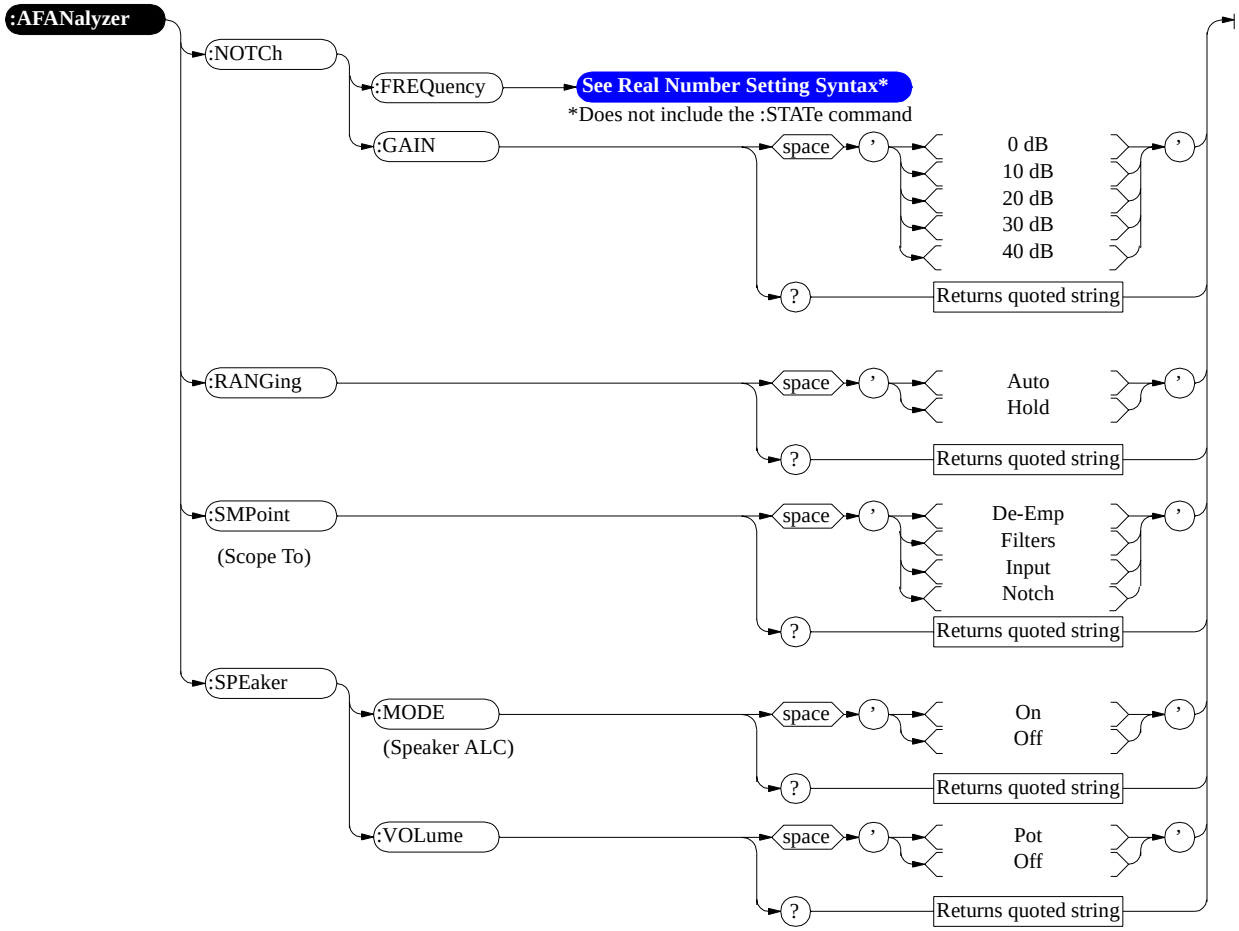

ManualsPlus.com

AF Generator 1

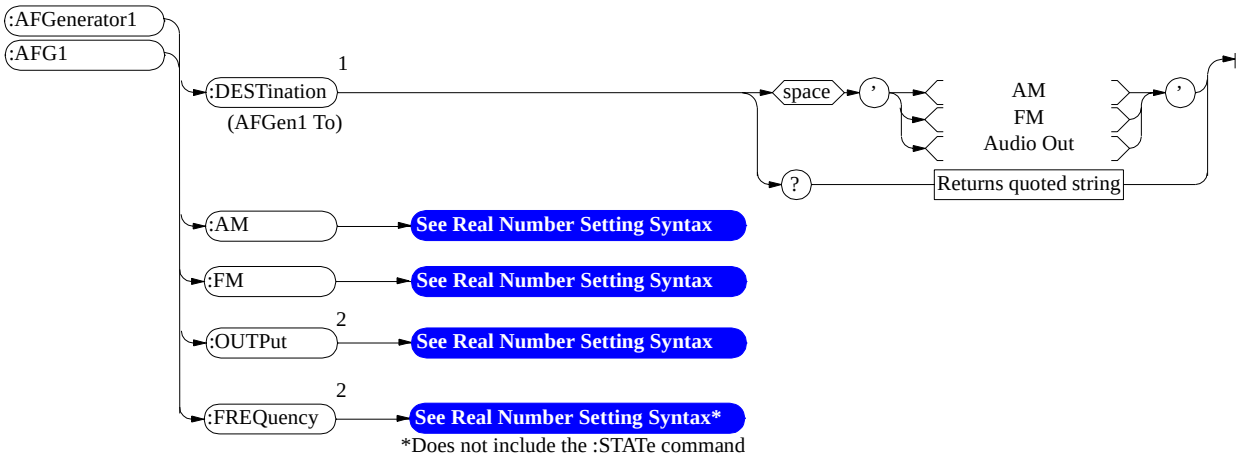

[1]In setting AFGenerator 1, you must first select a destination (DESTination), then set the modulation depth (AM), or deviation (FM) or amplitude (OUTPut), then set the modulation rate or audio output frequency (FREQuency)

[2]AM sets depth when DESTination set to AM.
FM sets deviation when DESTination set to FM.
OUTPut sets amplitude when DESTination set to Audio Out.
FREQuency sets modulation rate when DESTination set to AM, FM.
FREQuency sets audio output frequency when DESTination set to Audio Out.

ManualsPlus.com

AF Generator 2 Pre-Modulation Filters

To improve performance, one of four pre-modulation filters is *automatically* selected for each Encoder Mode. The automatically selected filter can only be changed using GPIB commands; however, we recommend you do not change this setting. In order to change the automatically selected filter, the Filter Mode must be set to ON. Filter Mode ON allows independent selection of filters. The Filter Mode ON command must be executed first to override default settings. Filter Mode OFF is the power up default state. The following error will occur if the user attempts to select an alternate filter without first setting the Filter Mode to ON: **`Entry not accepted.`** Auto entries take precedence. The syntax to change or query the premodulation filter is shown below.

AFG2:FILTER:MODE 'ON|OFF'(select one)
AFG2:FILTER:MODE?(query the current mode setting)
AFG2:FILTER 'NONE|20kHz LPF|250Hz LPF|150Hz LPF'(select one)
AFG2:FILTER?(query the current filter setting)

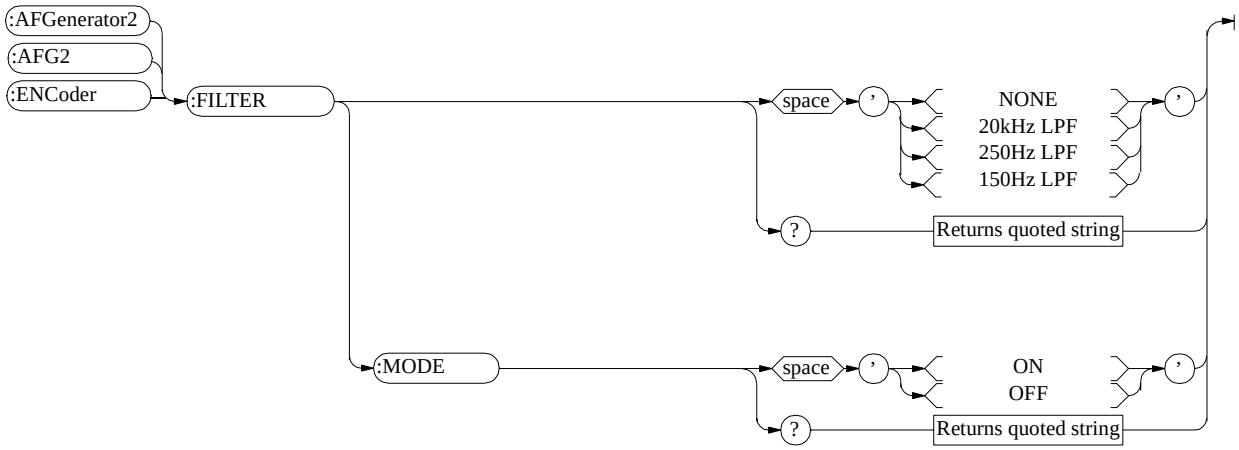

ManualsPlus.com

AF Generator 2/Encoder

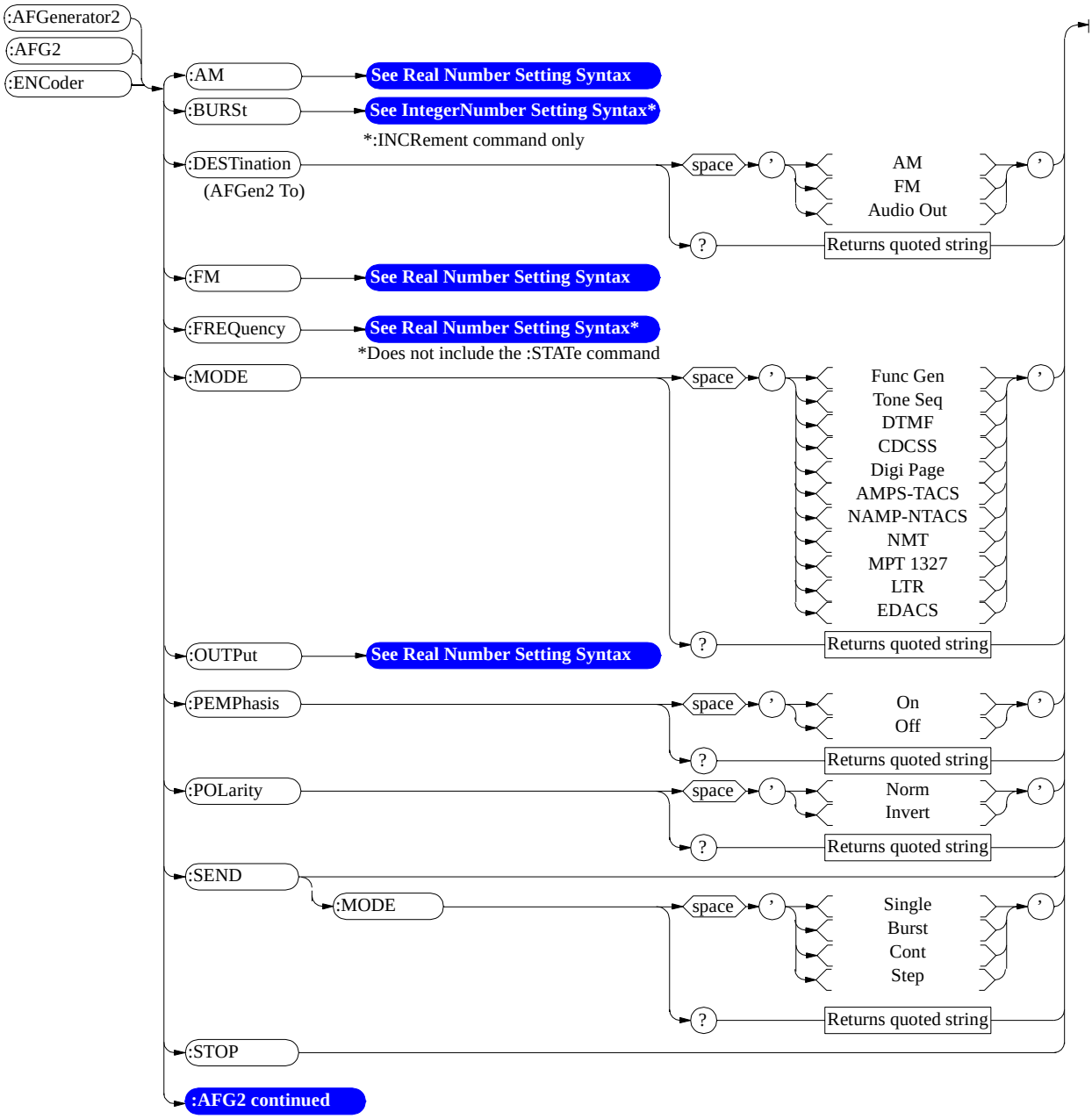

ManualsPlus.com

:AMPS or :TACS

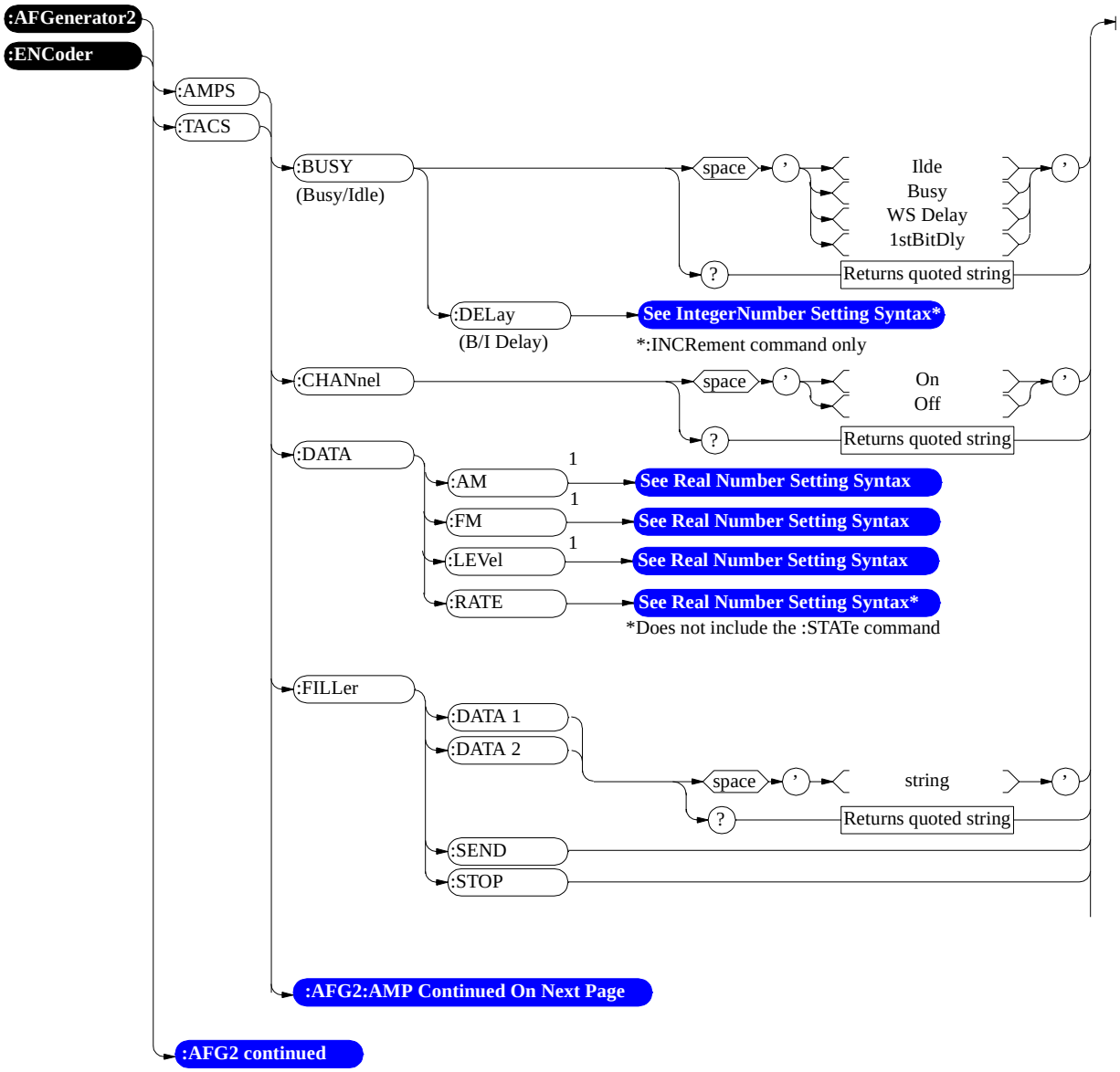

1 AM, FM, and LEVel correspond to the setting of the AFGen2 To field.

ManualsPlus.com

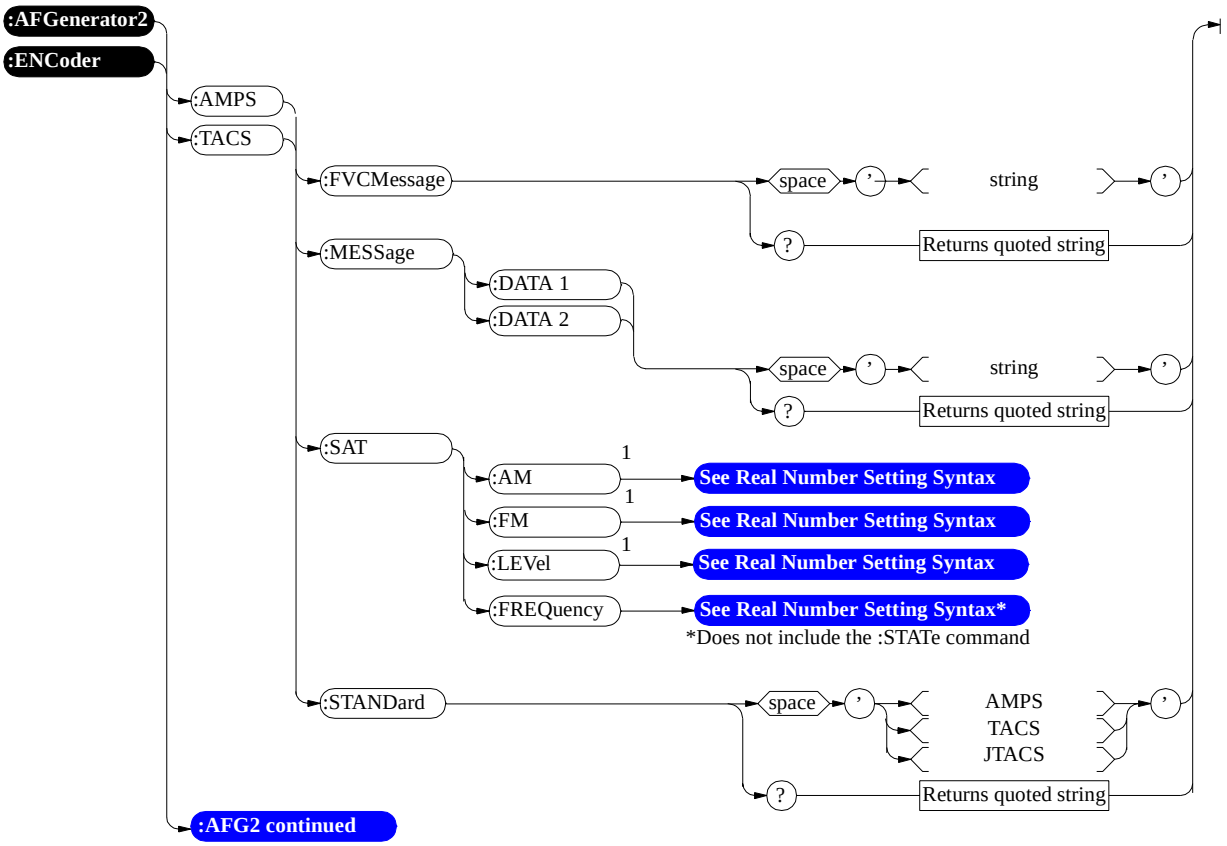

1 AM, FM, and LEVel correspond to the setting of the AFGen2 To field.

ManualsPlus.com

:NAMPs or :NTACs

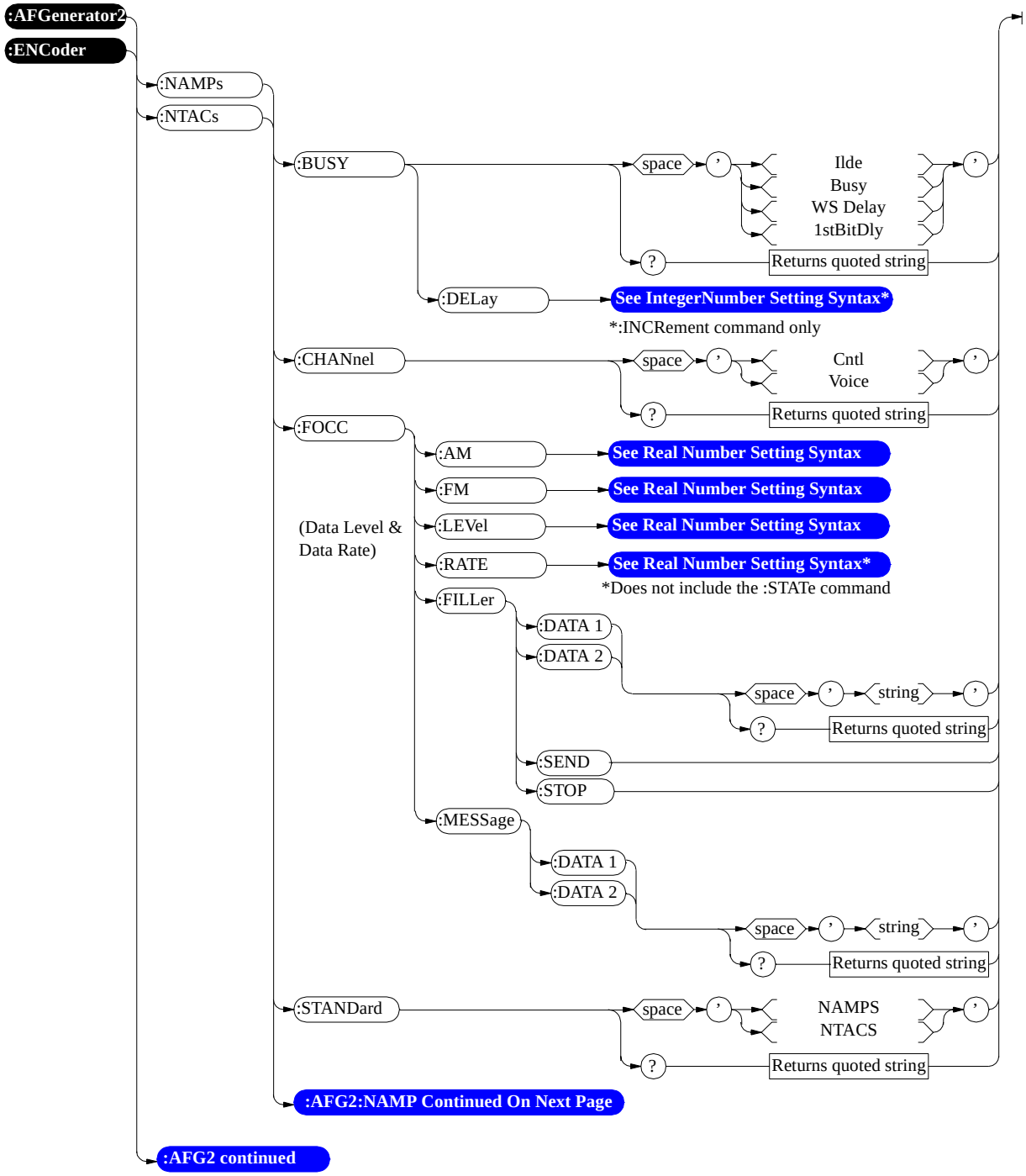

ManualsPlus.com

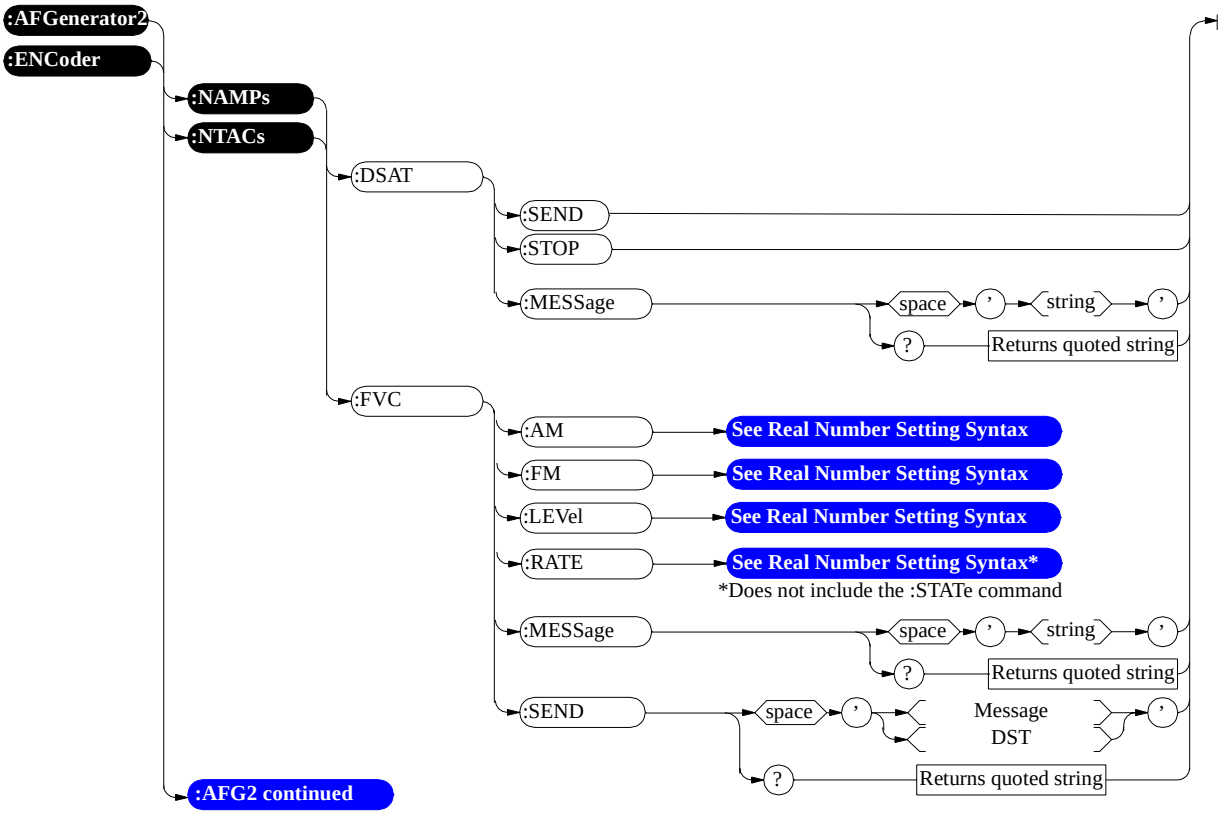

ManualsPlus.com

:CDCSs and :DTMF

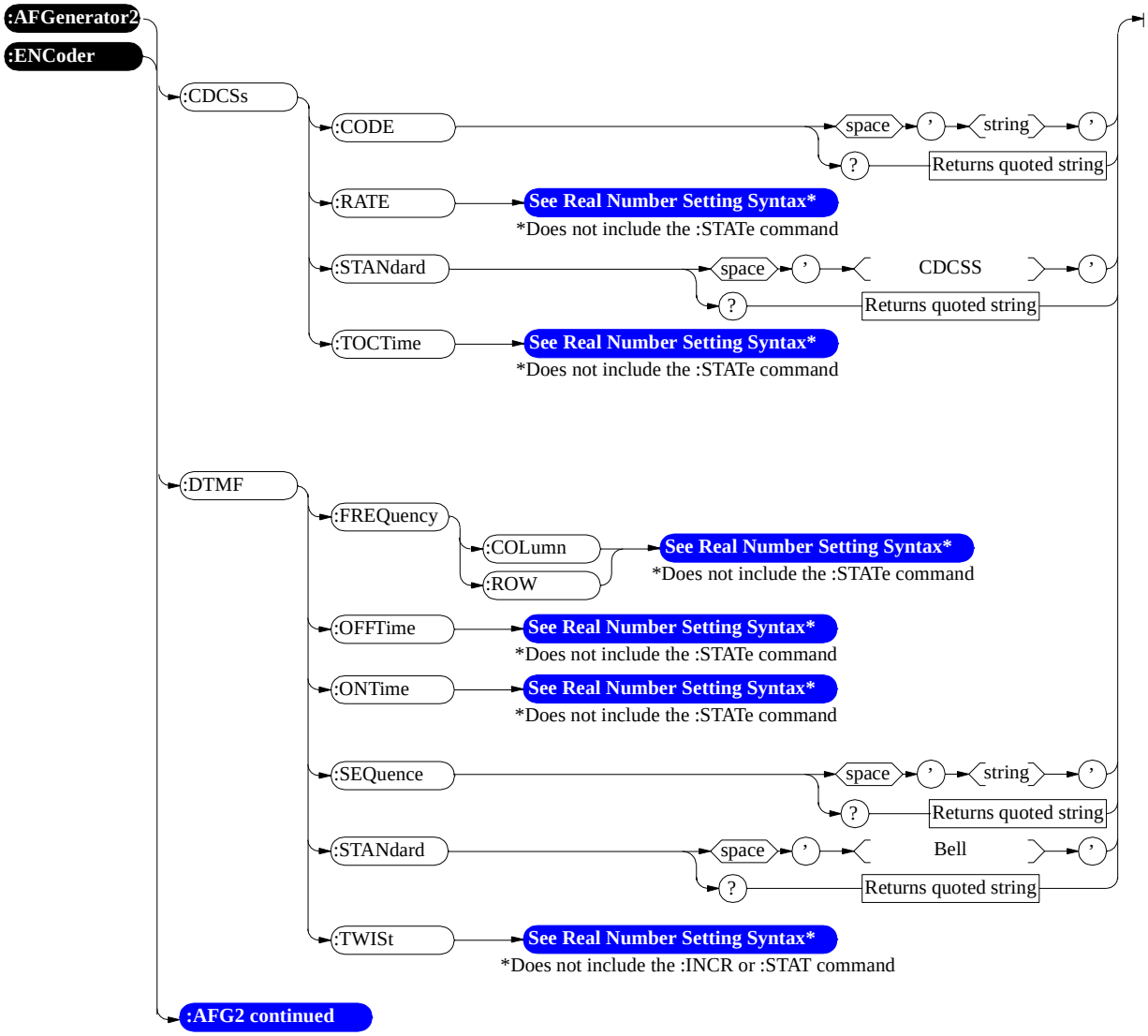

ManualsPlus.com

:DPAGing

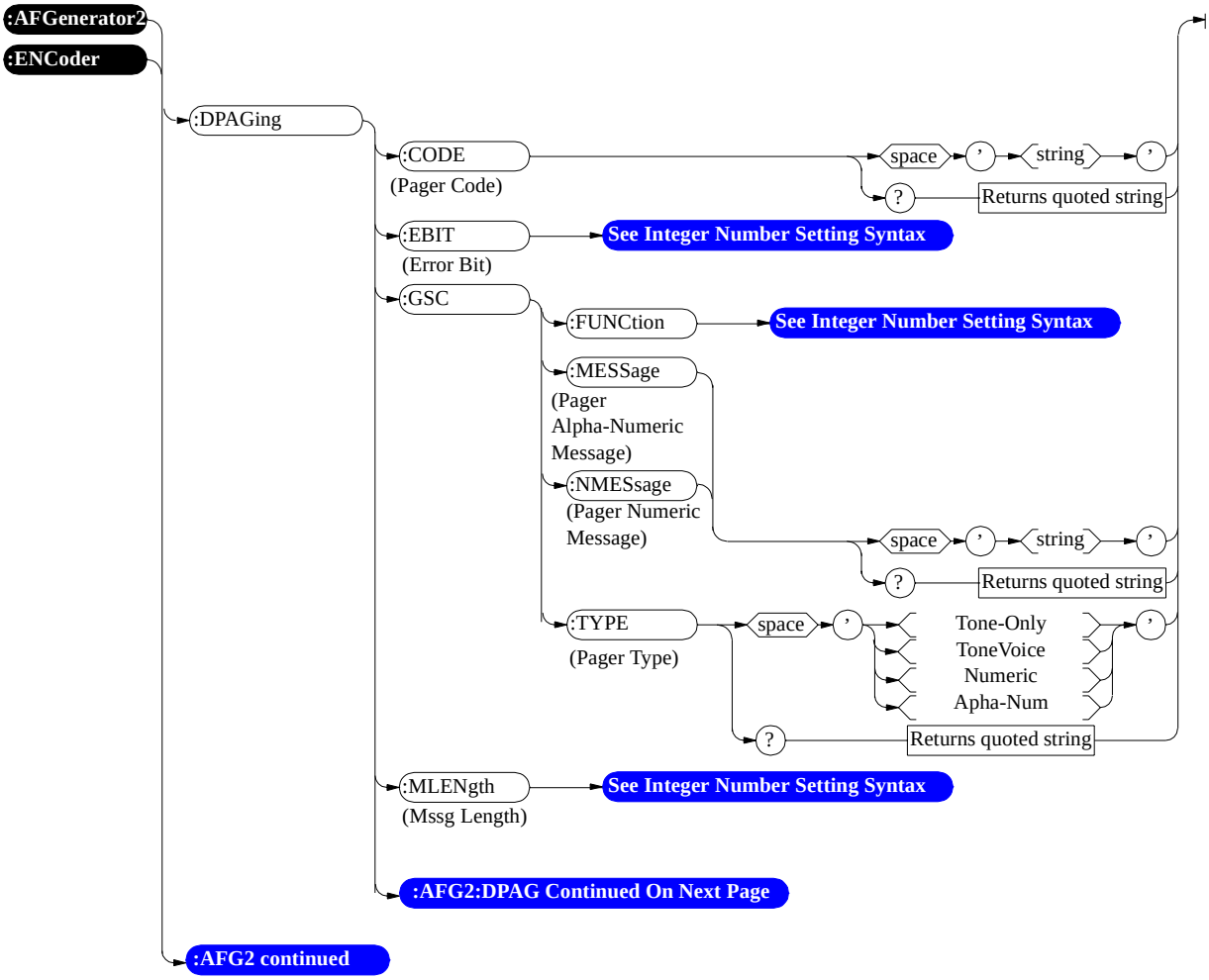

ManualsPlus.com

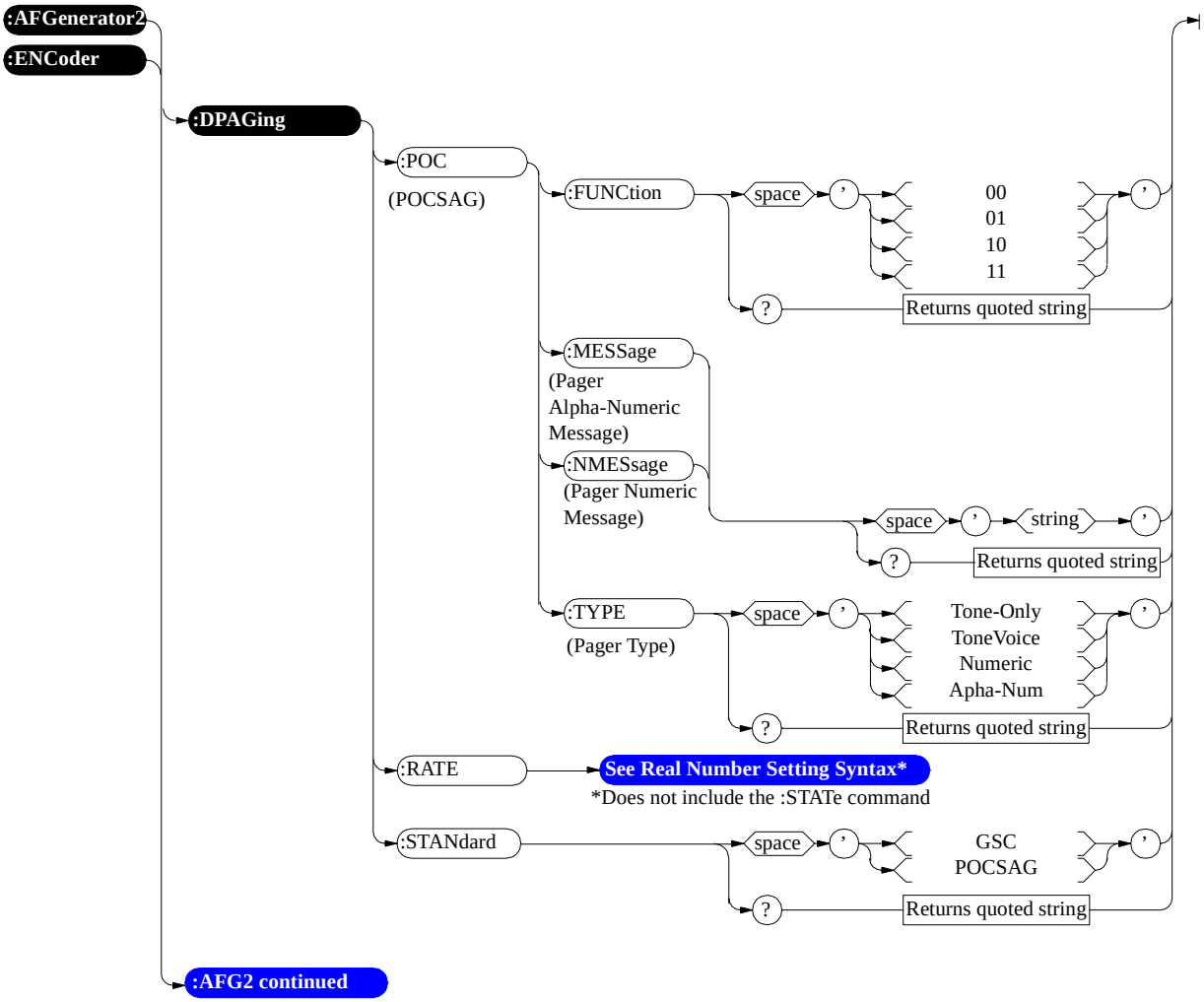

ManualsPlus.com

:FGENerator and :TSEQuential

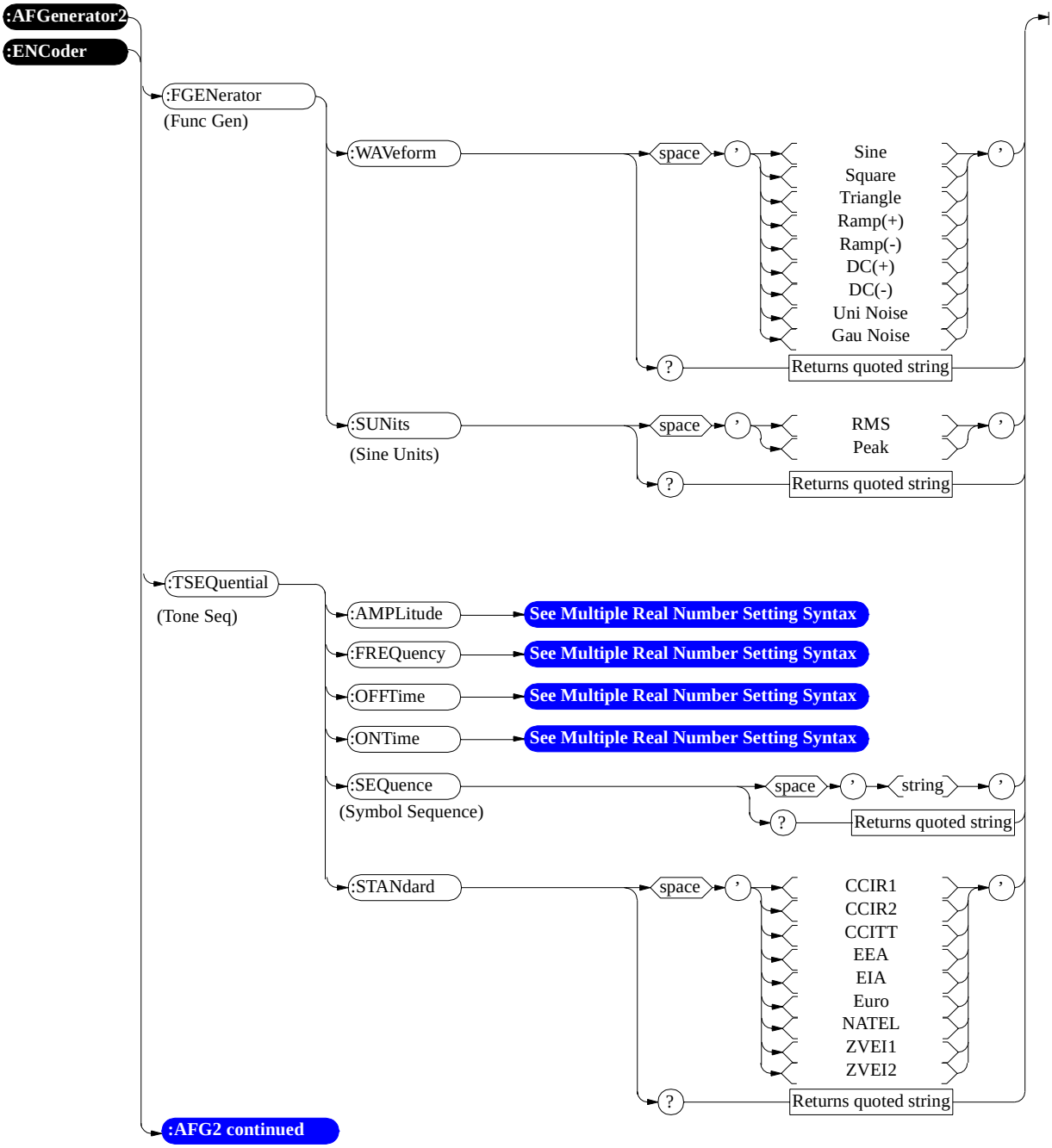

ManualsPlus.com

:NMT

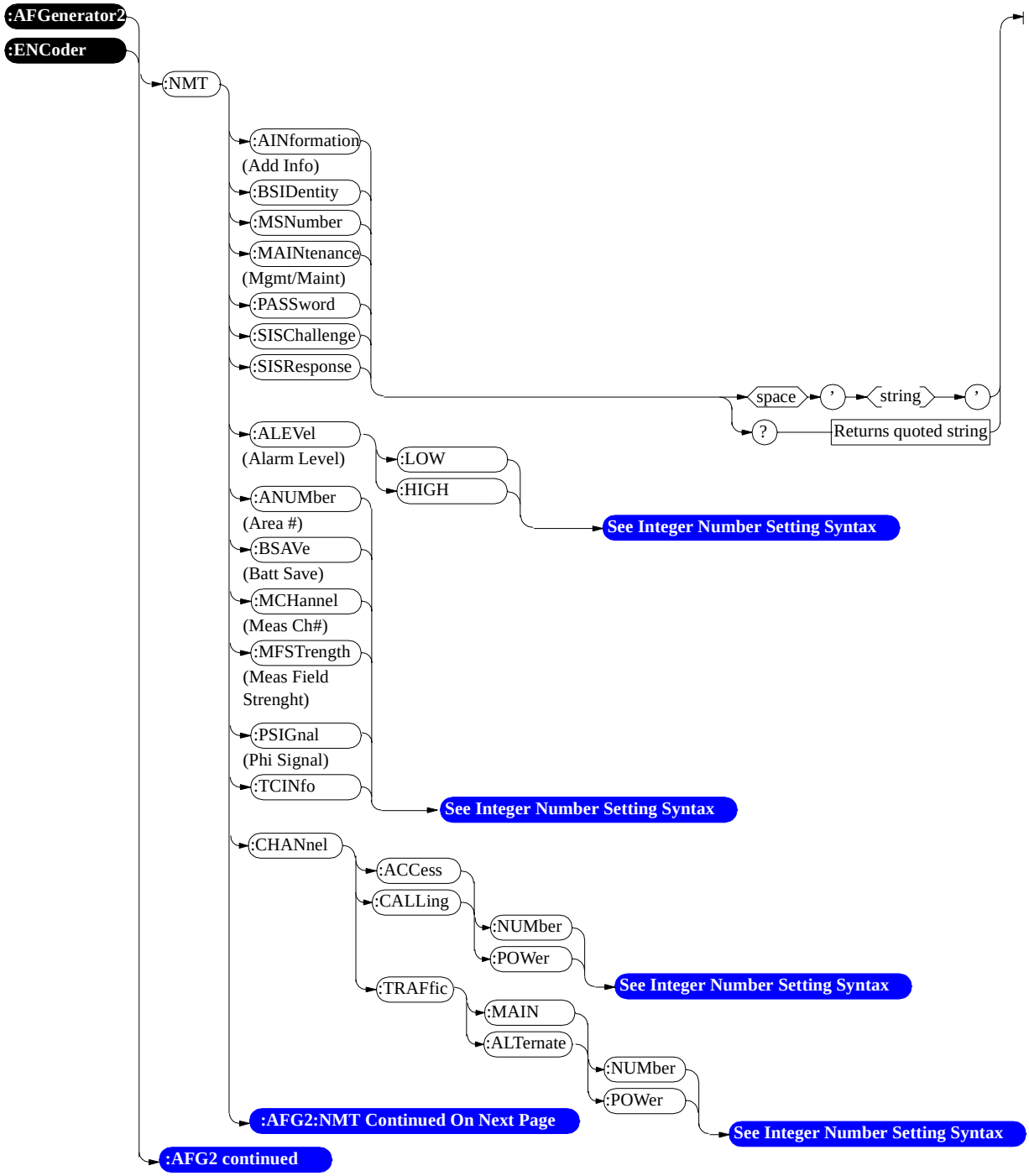

ManualsPlus.com

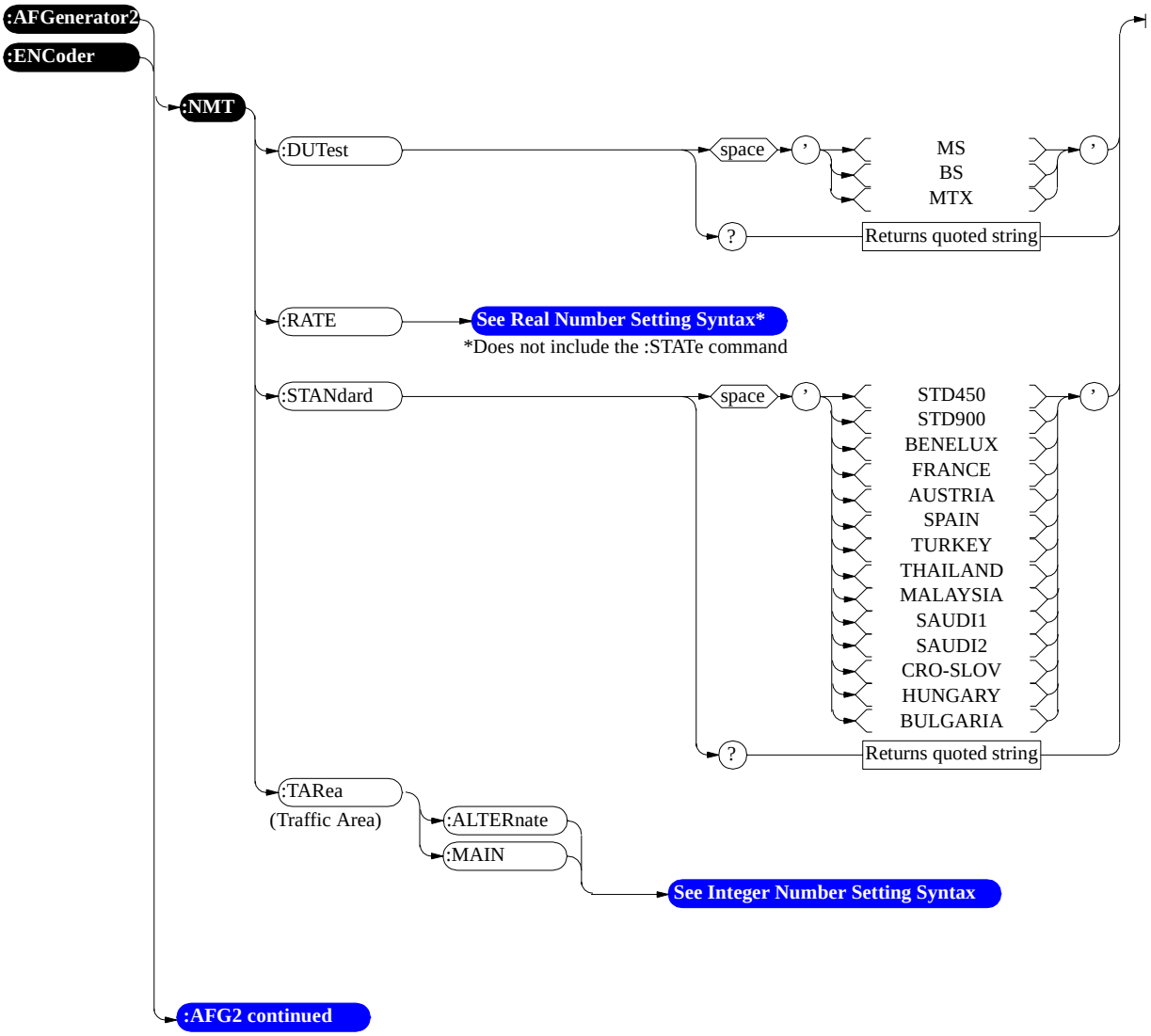

ManualsPlus.com

:LTR

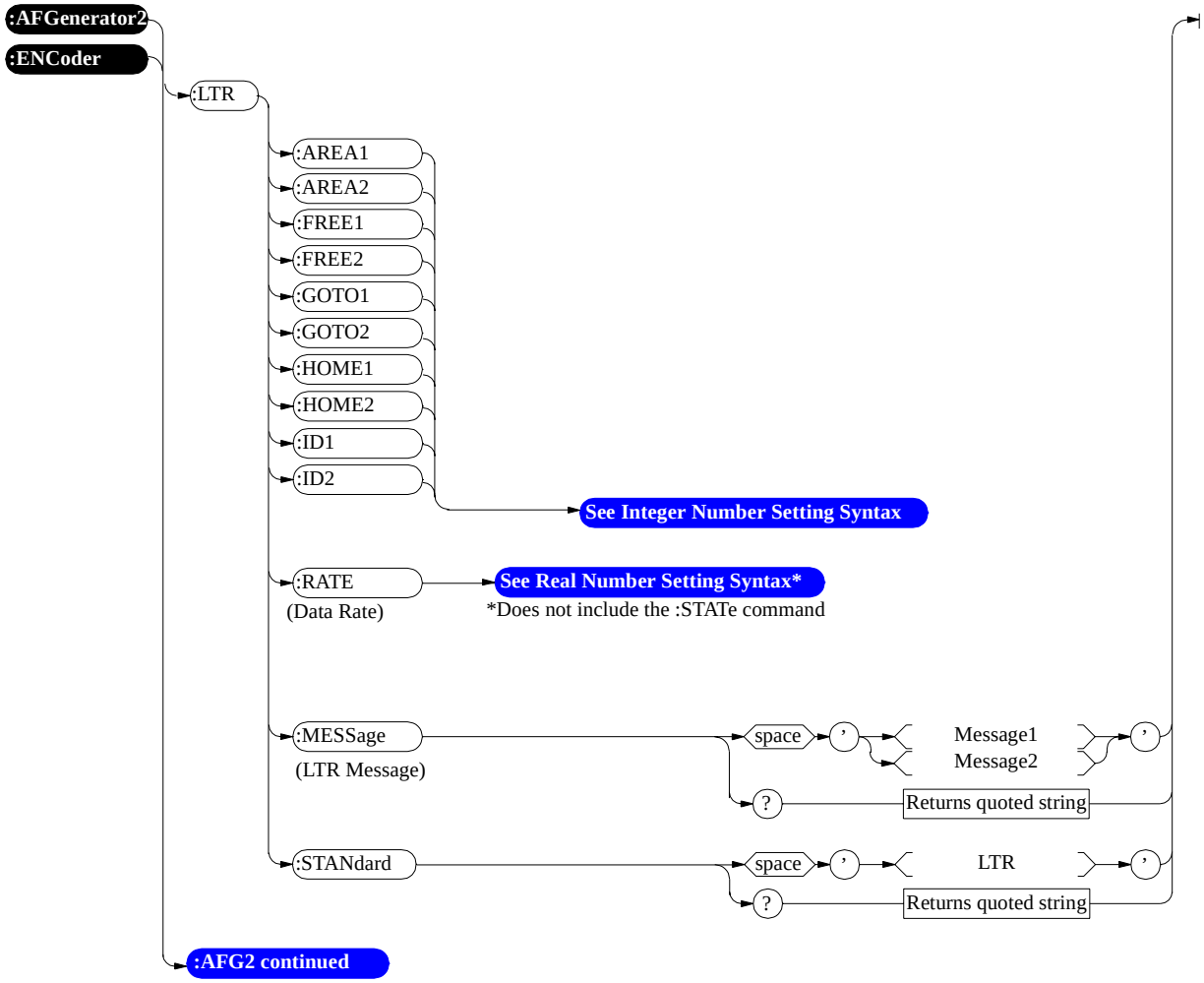

ManualsPlus.com

:EDACs

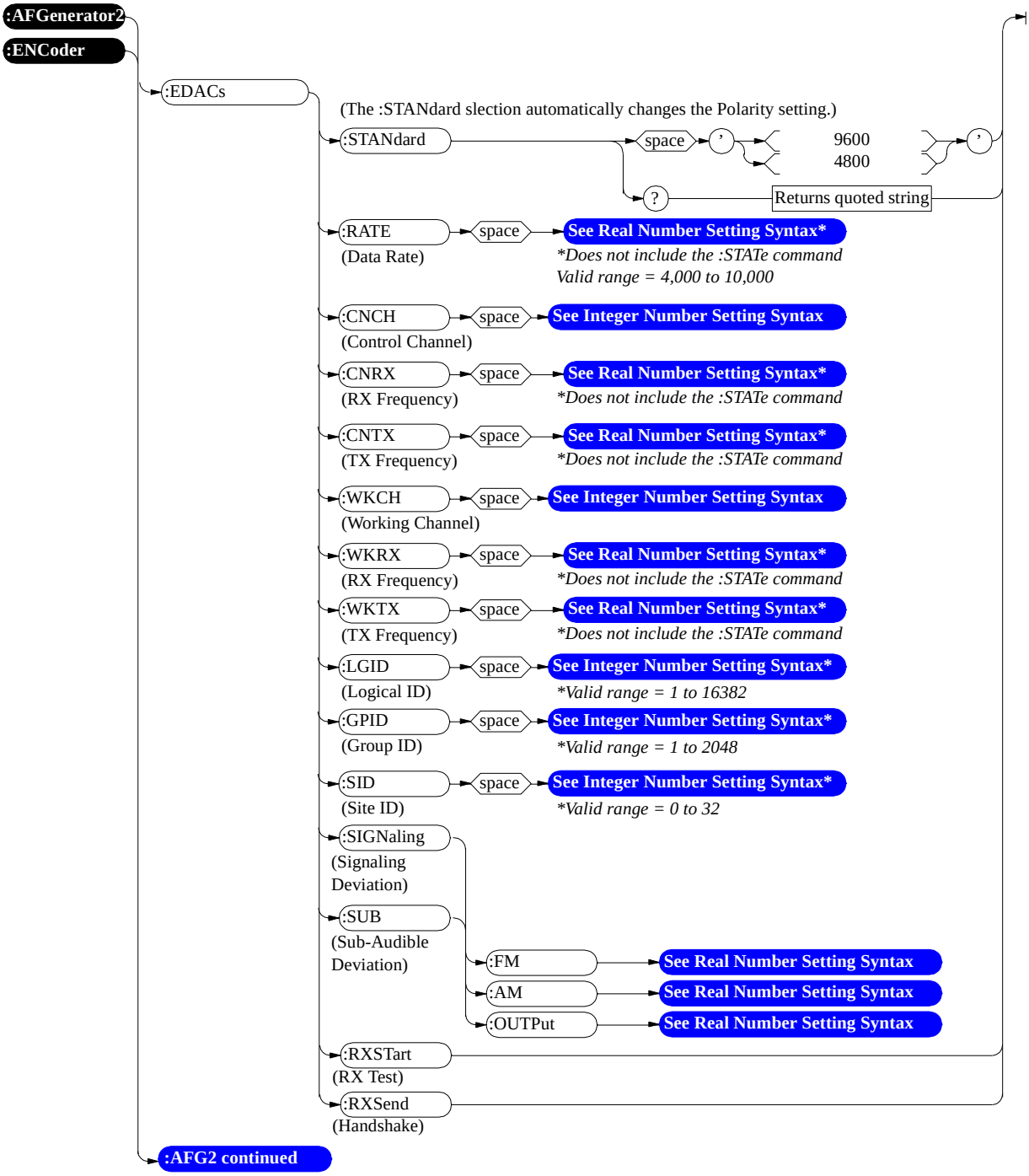

ManualsPlus.com

:MPT1327

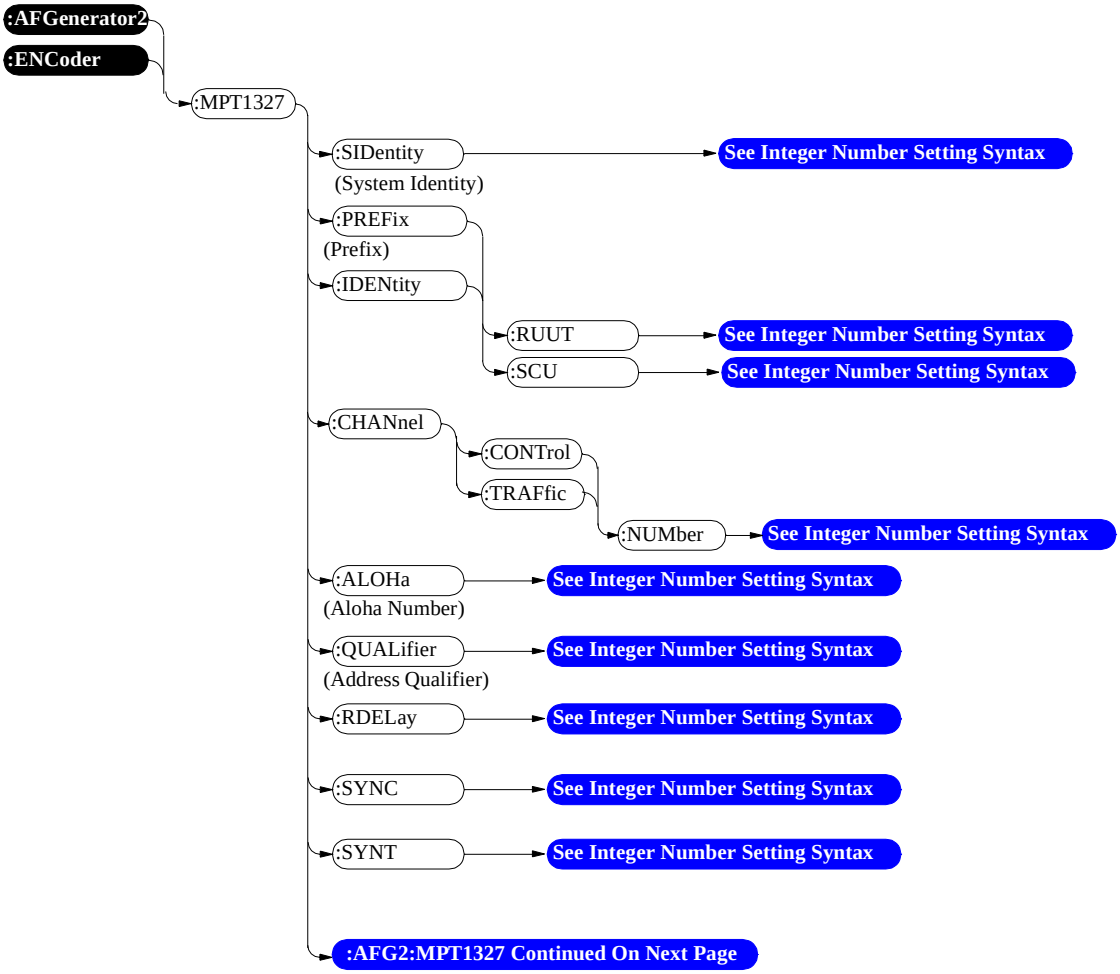

ManualsPlus.com

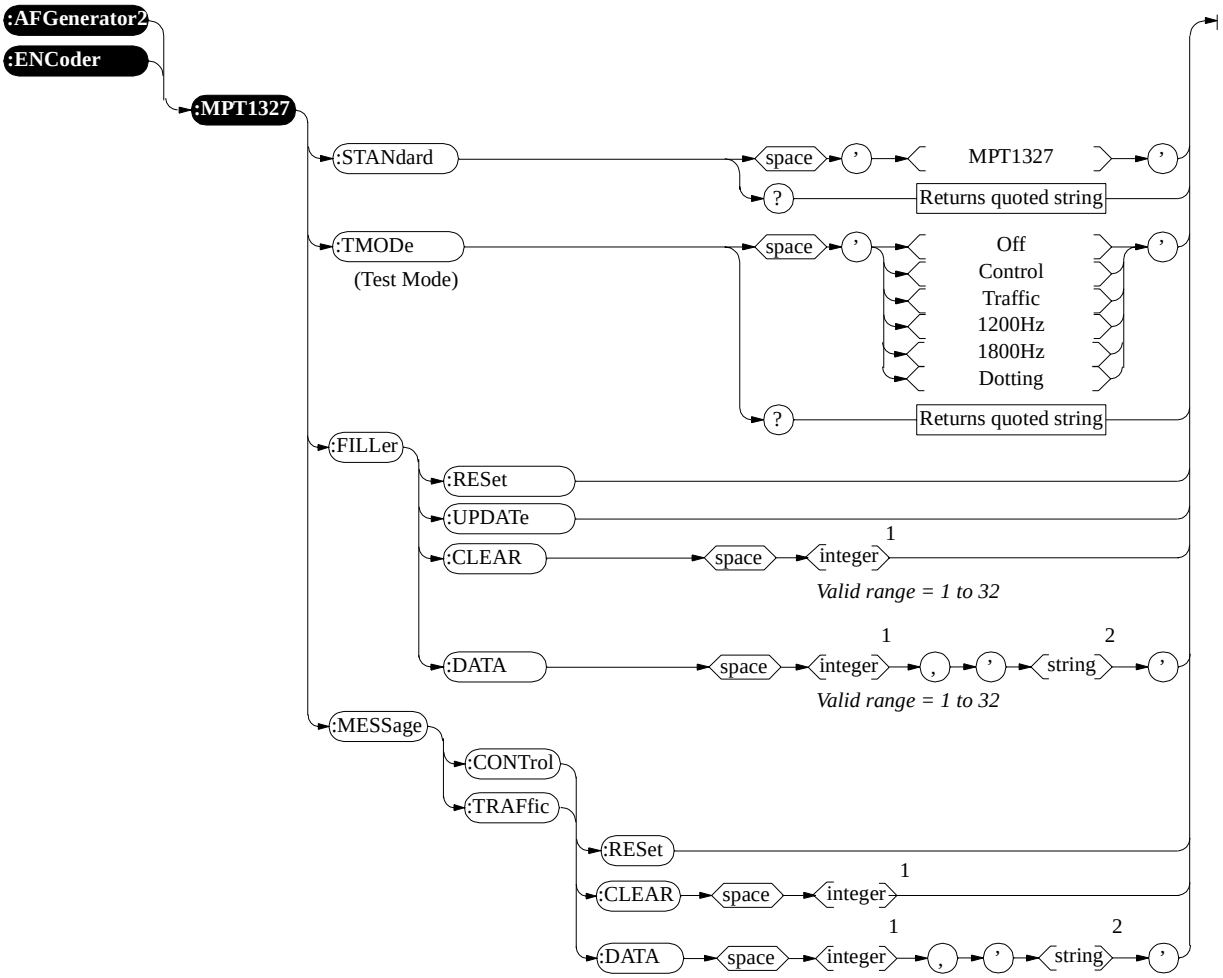

1 Integer value from 1 to 32

2 String maximum length 300

ManualsPlus.com

Configure, I/O Configure

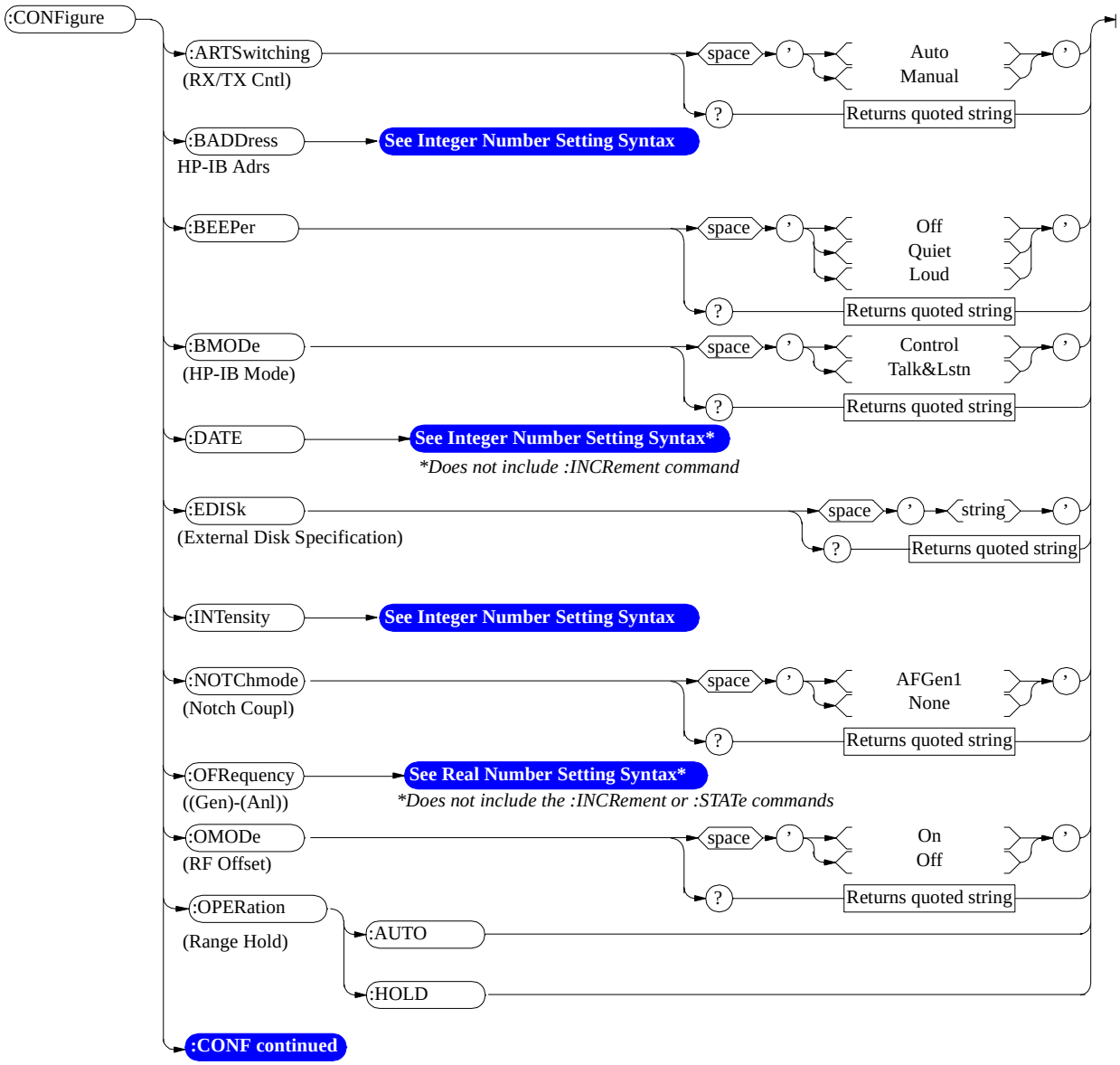

ManualsPlus.com

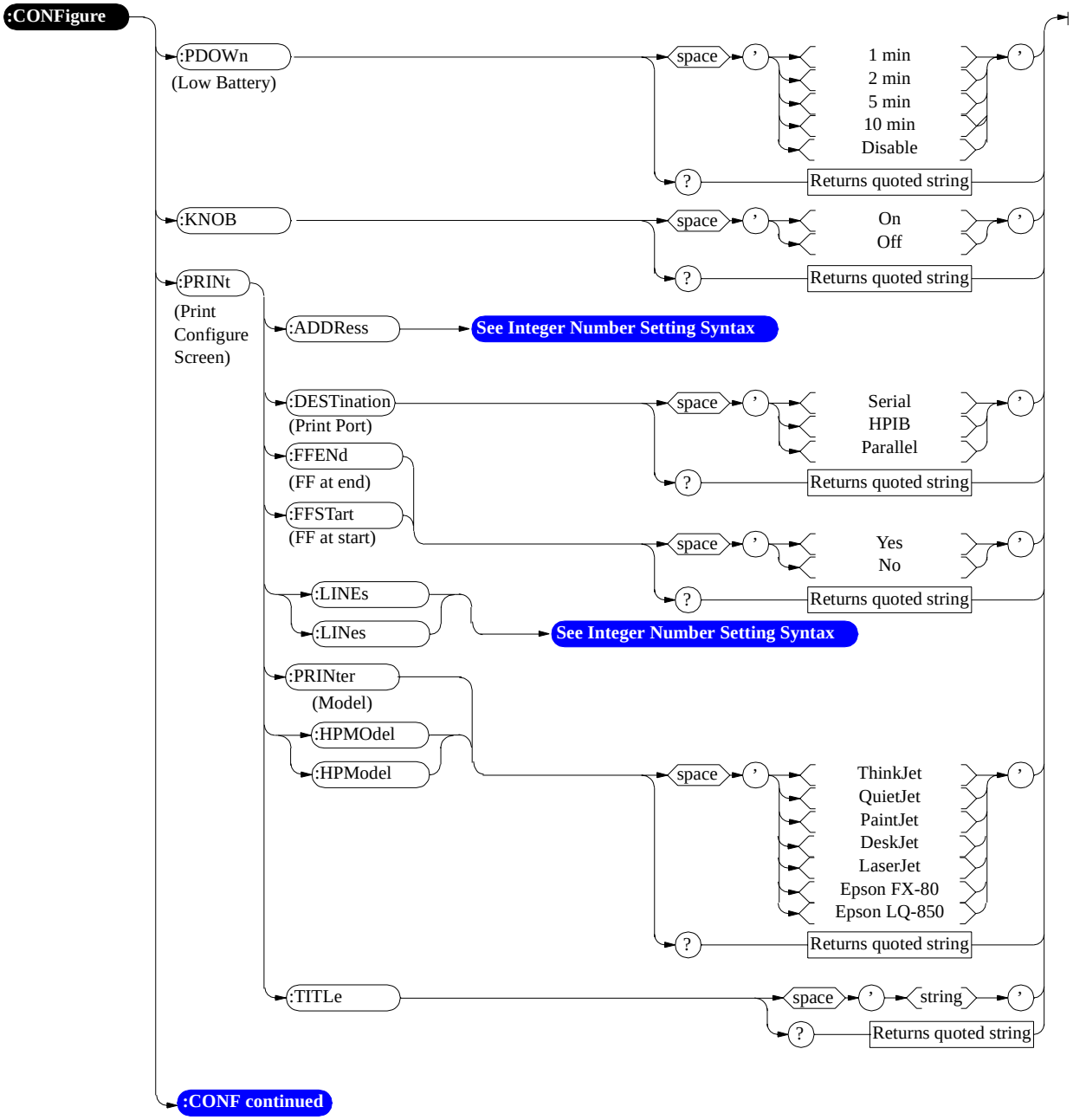

ManualsPlus.com

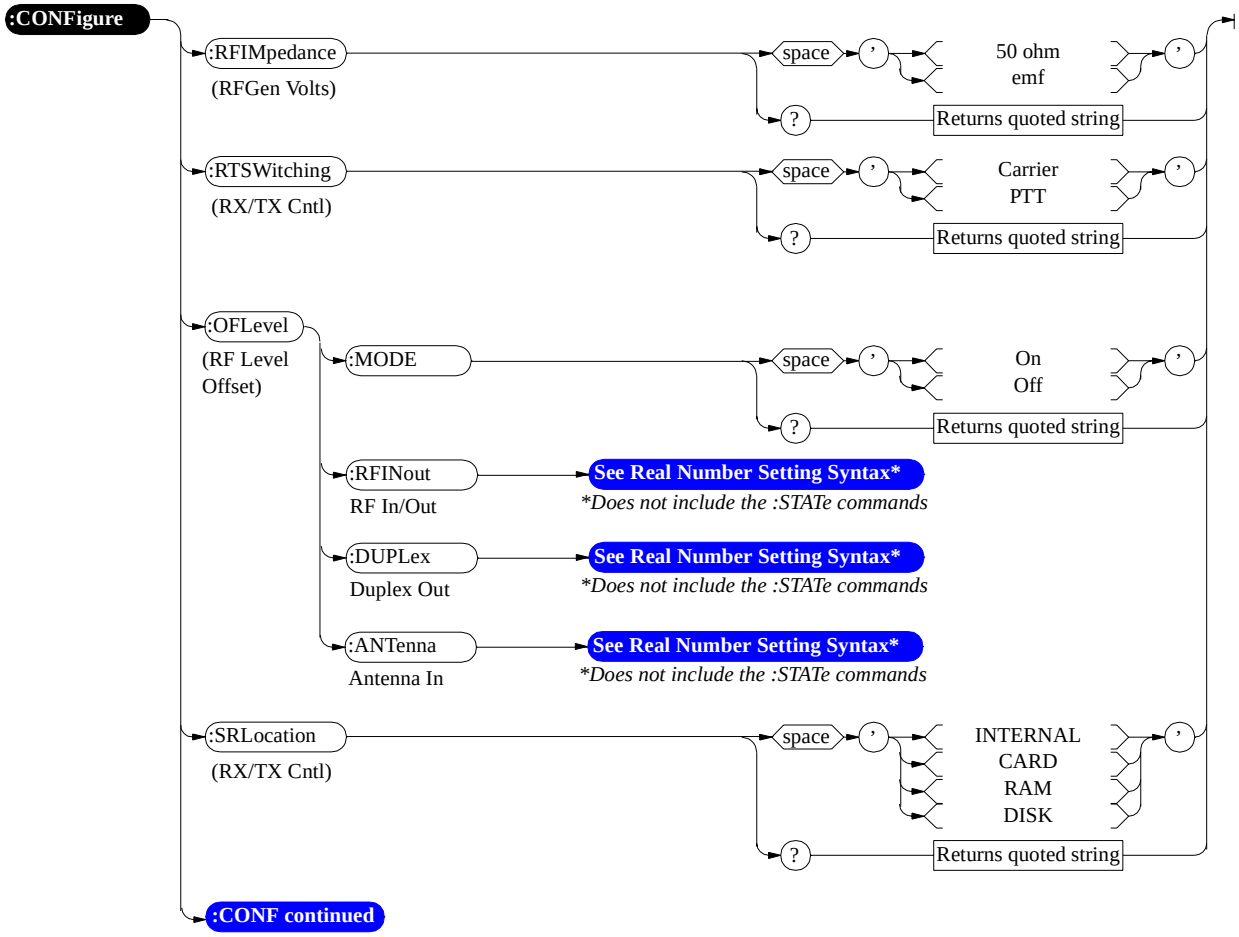

ManualsPlus.com

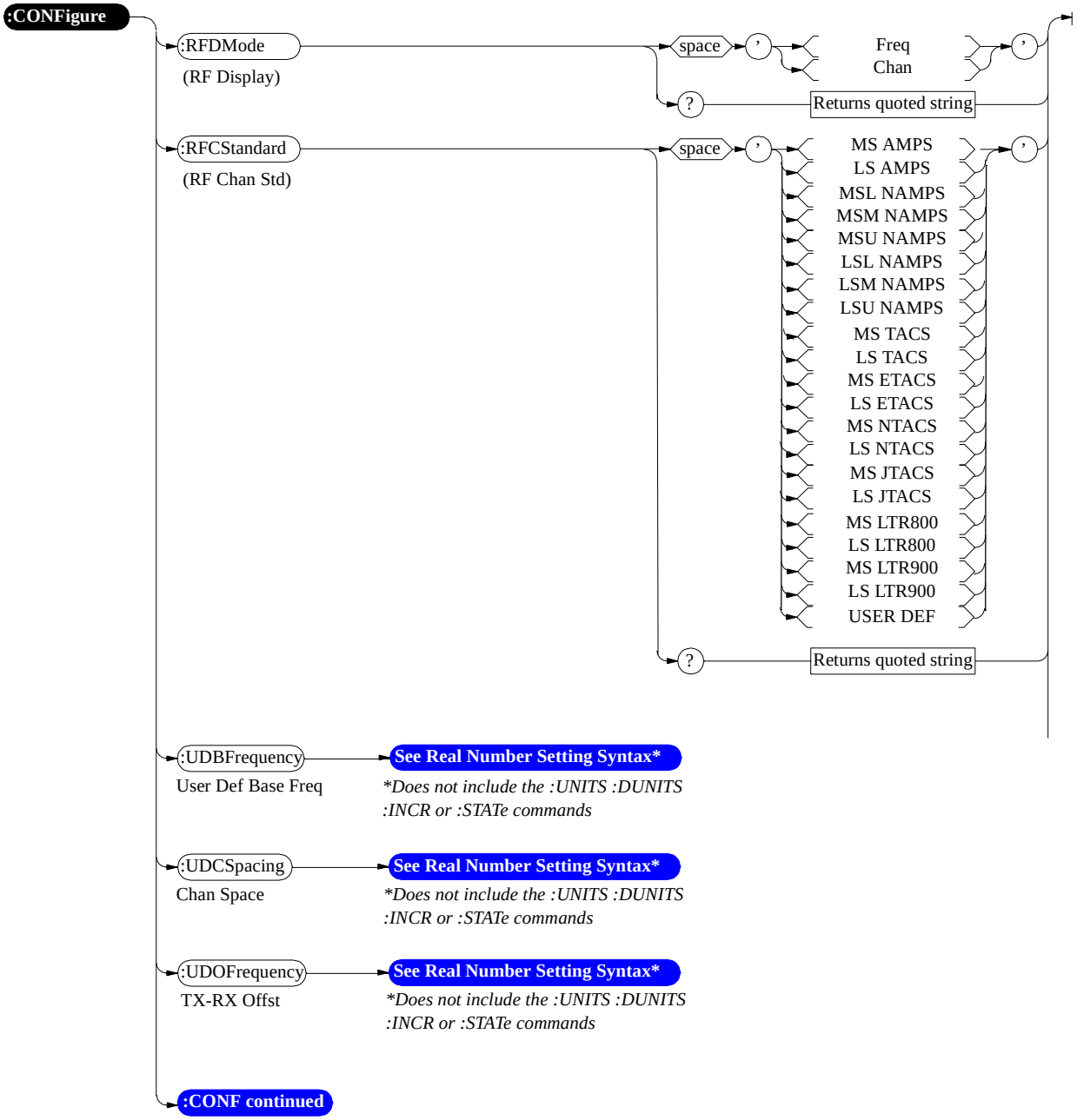

ManualsPlus.com

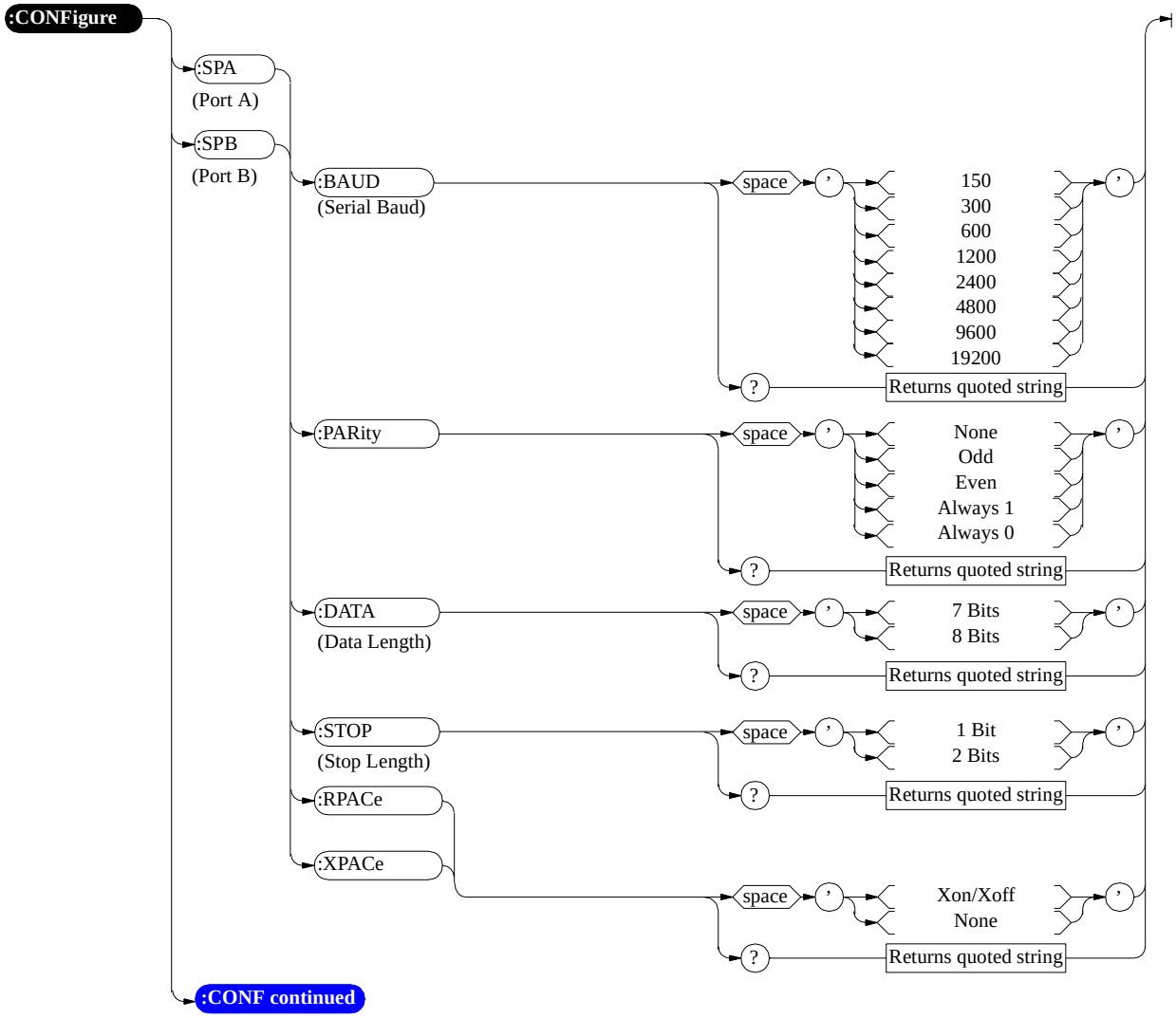

ManualsPlus.com

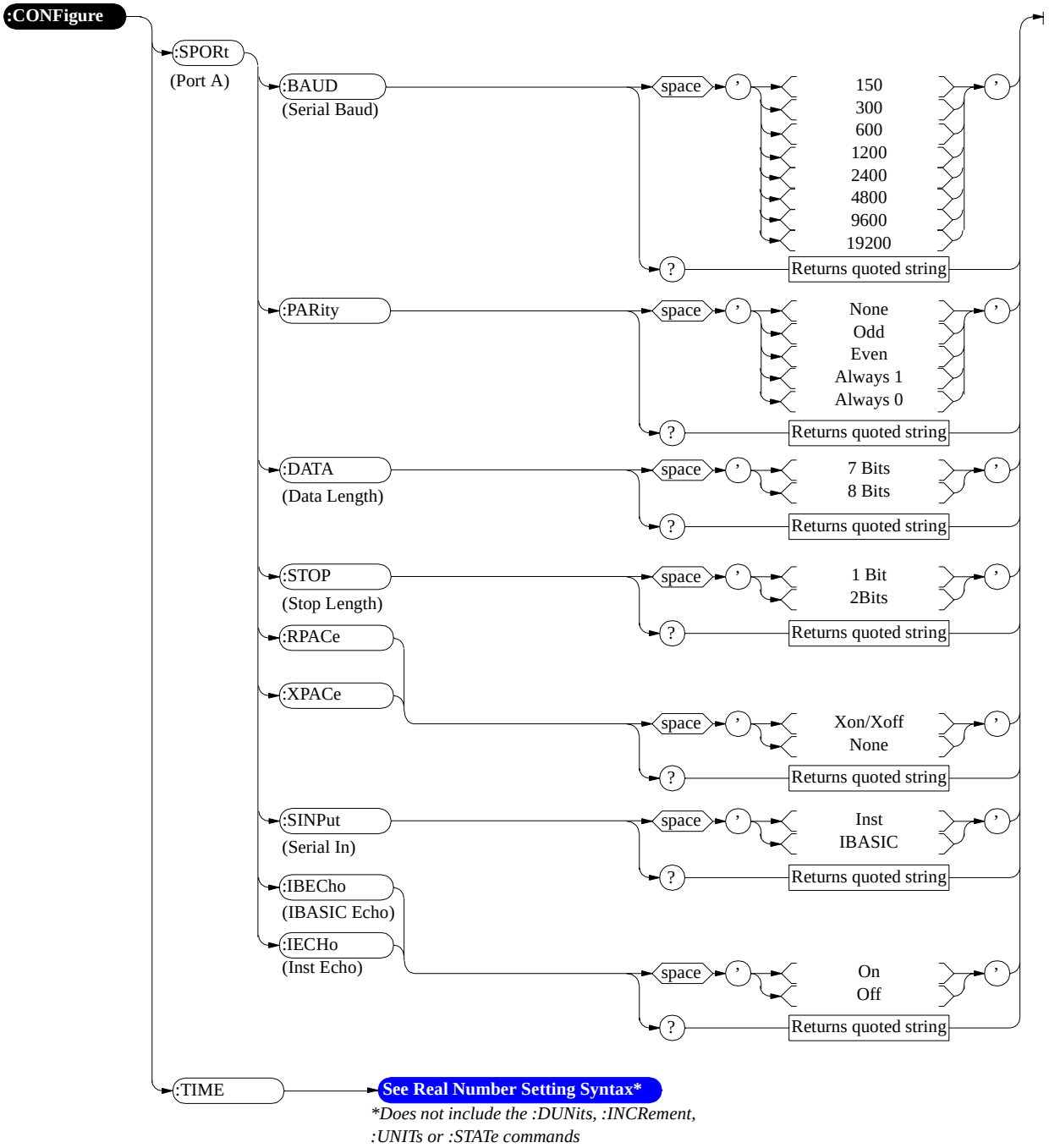

ManualsPlus.com

Call Processing

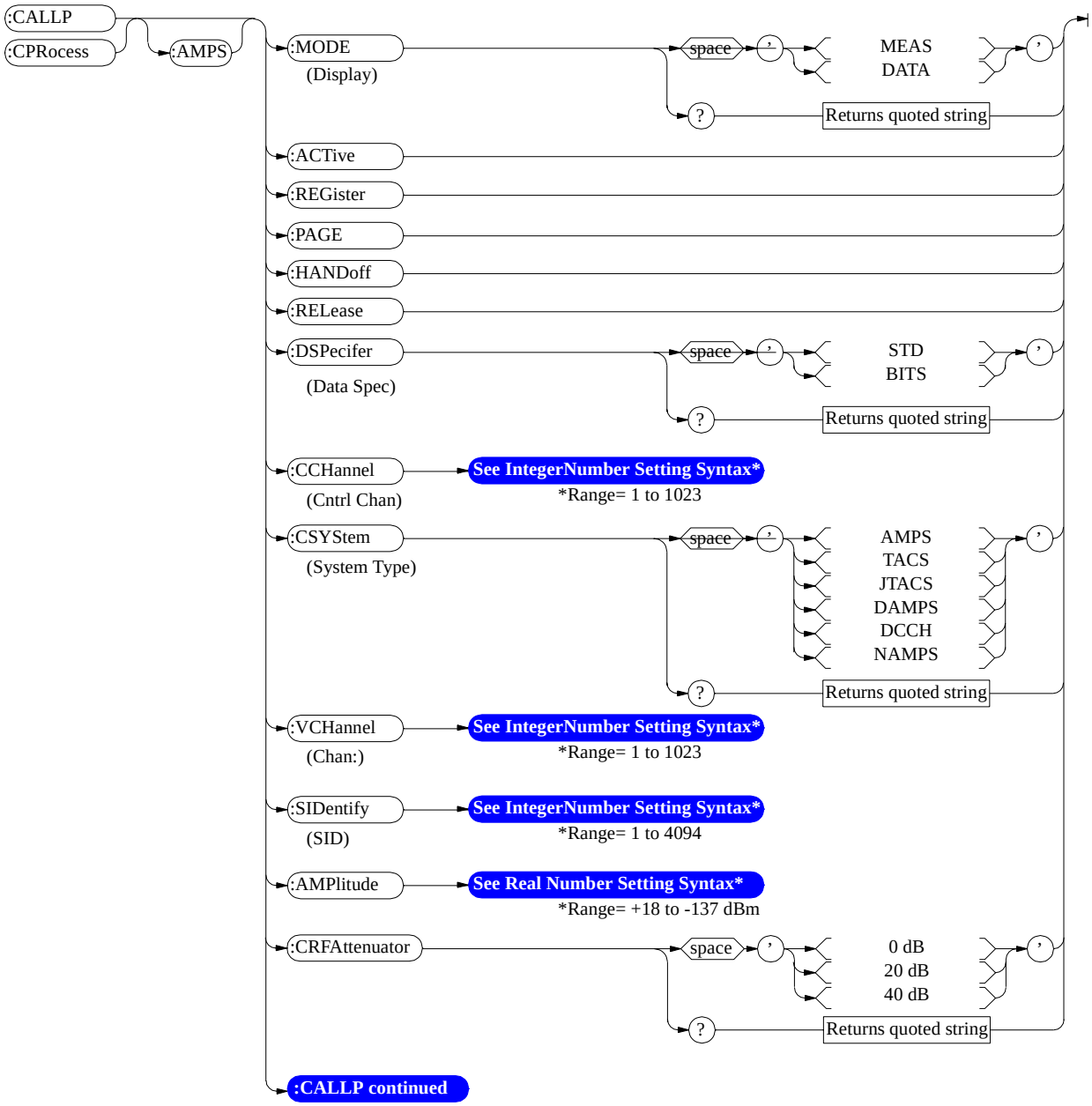

ManualsPlus.com

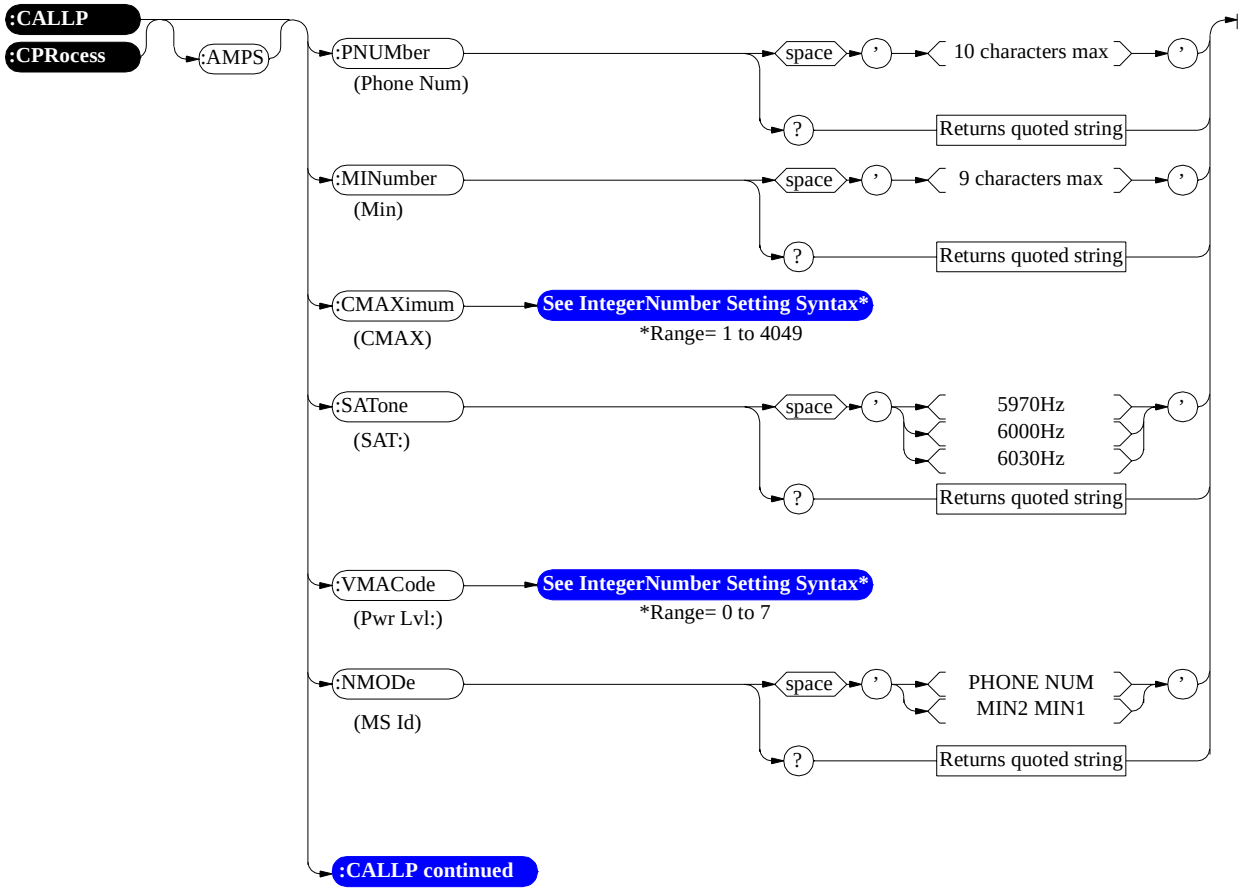

ManualsPlus.com

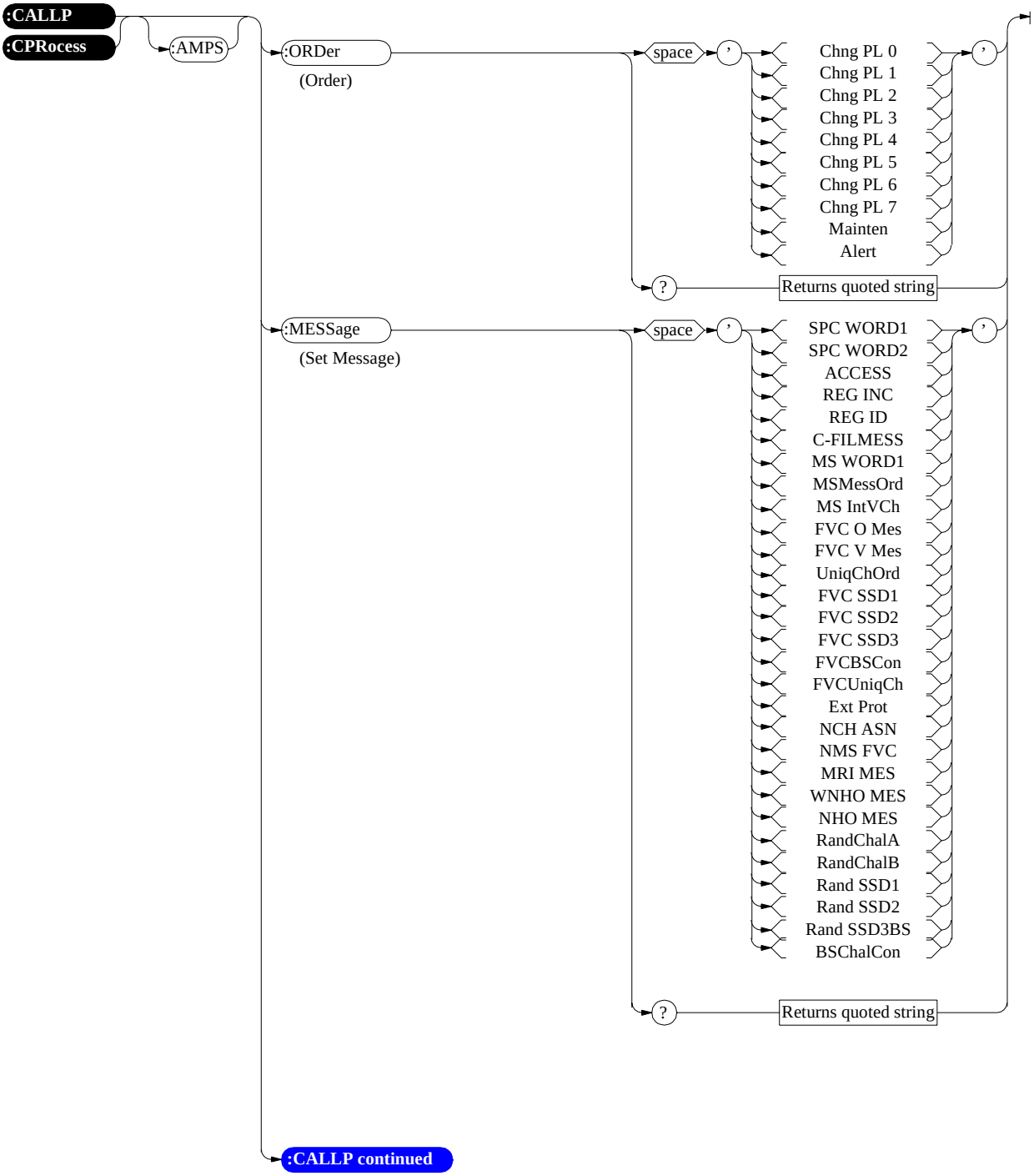

ManualsPlus.com

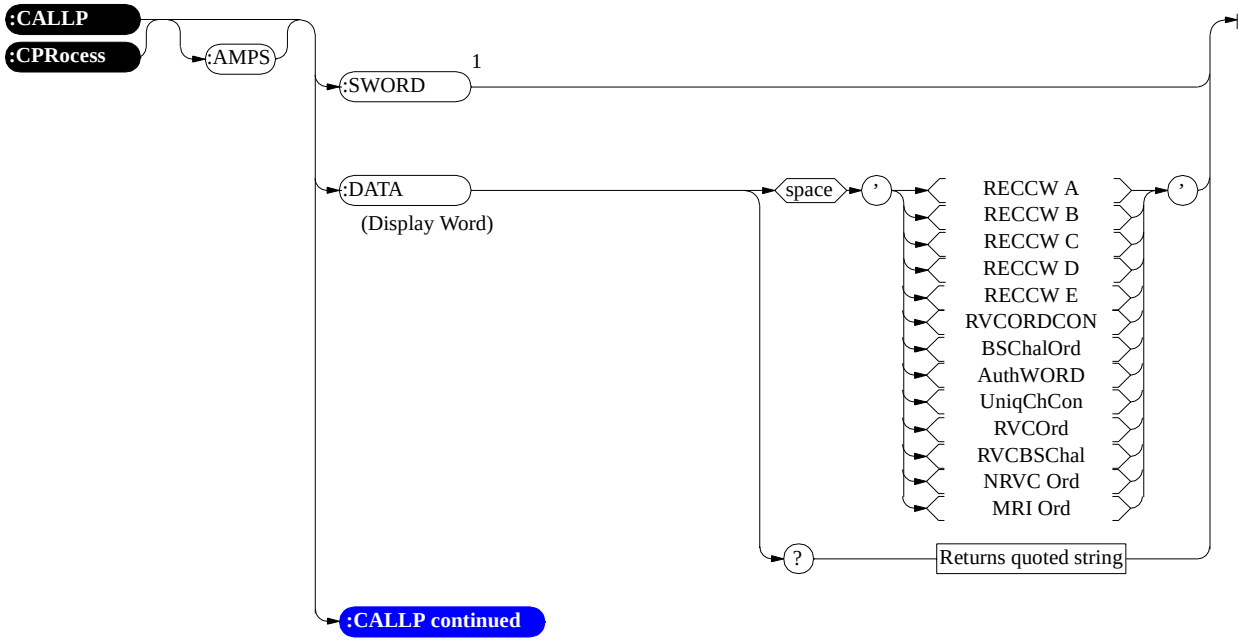

[1]SWORD will issue a single overhead word and is only supported for MSOrder or MSMessOrd. **"Send Word" on page 566** for programming information.

ManualsPlus.com

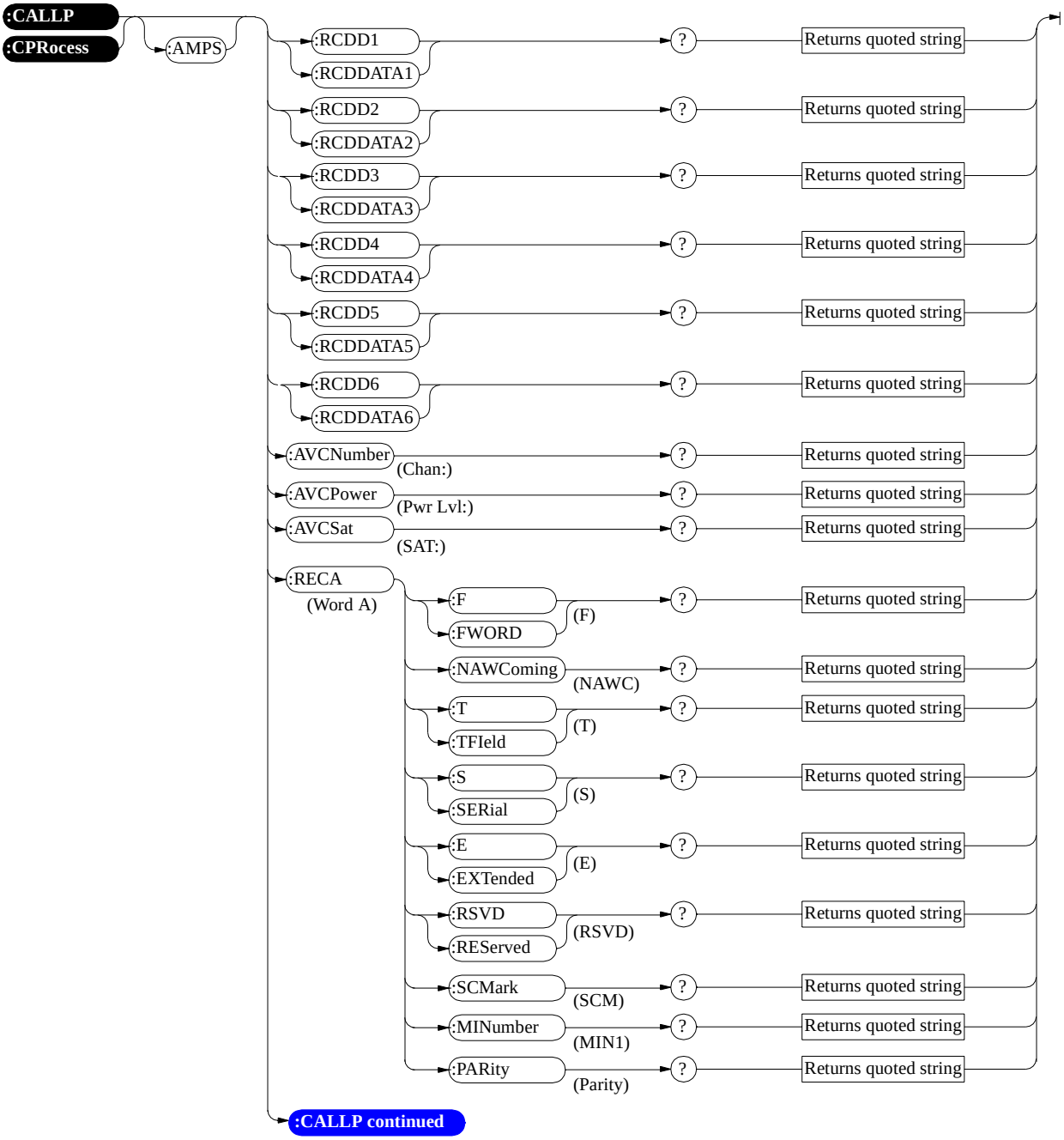

ManualsPlus.com

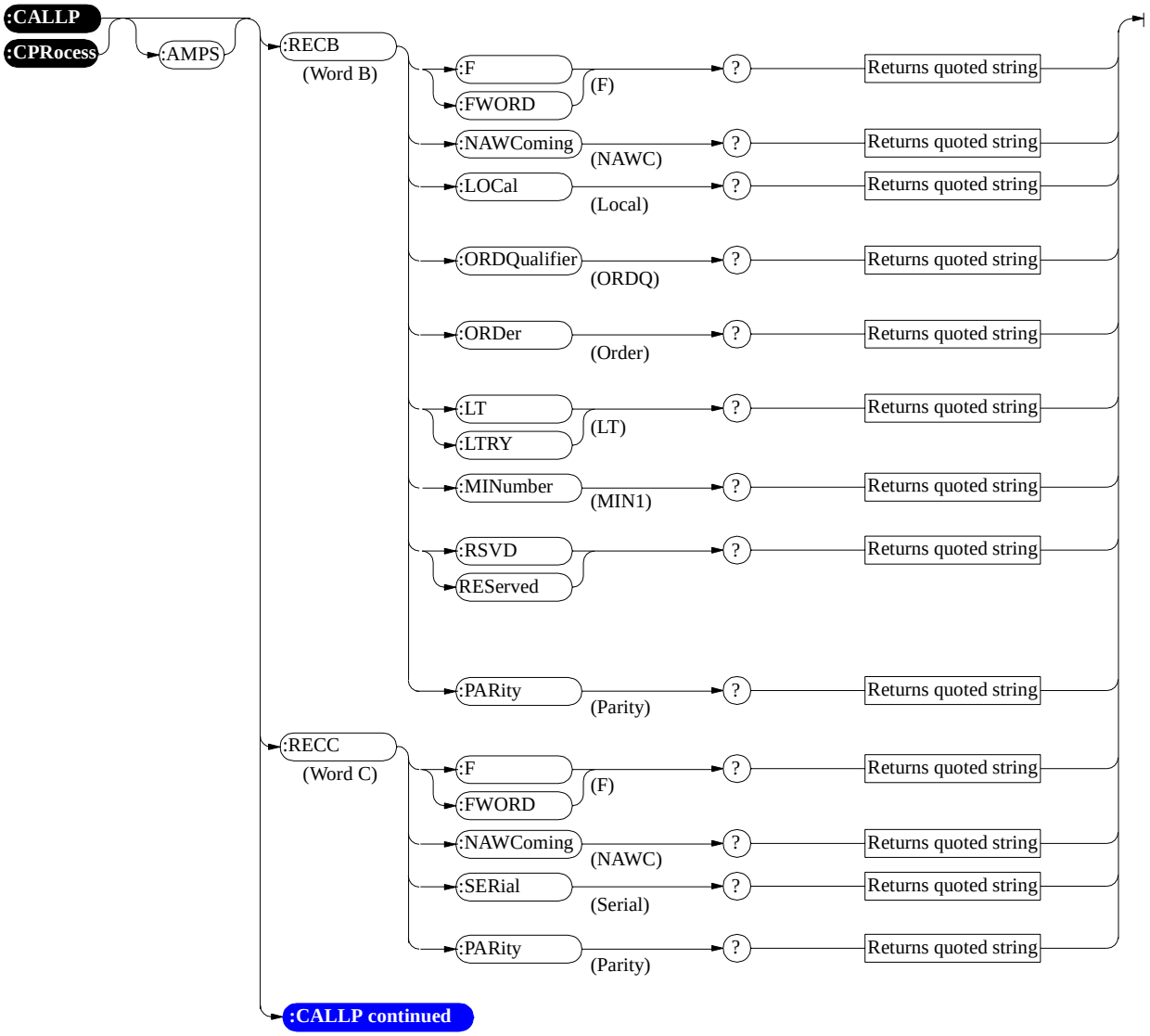

ManualsPlus.com

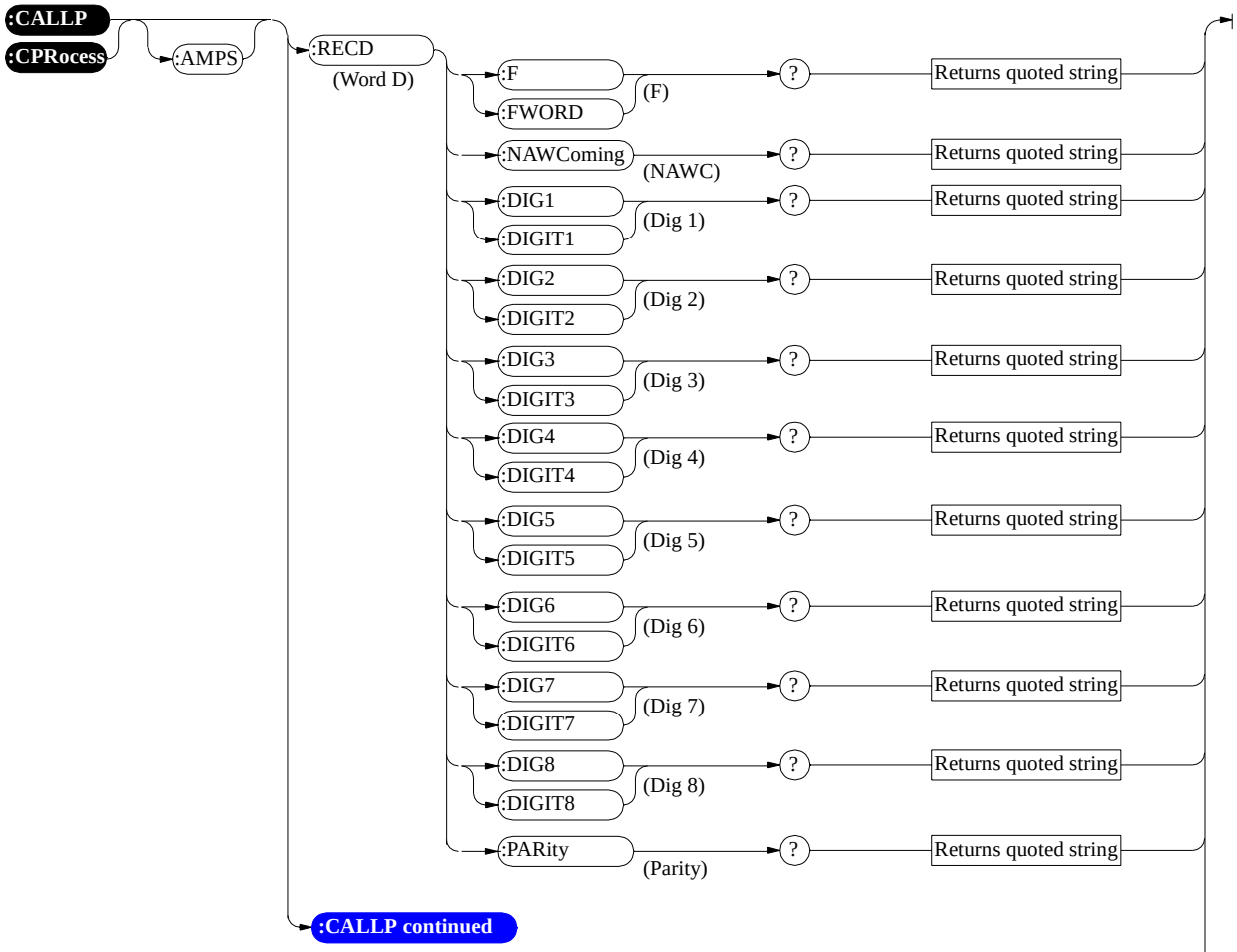

ManualsPlus.com

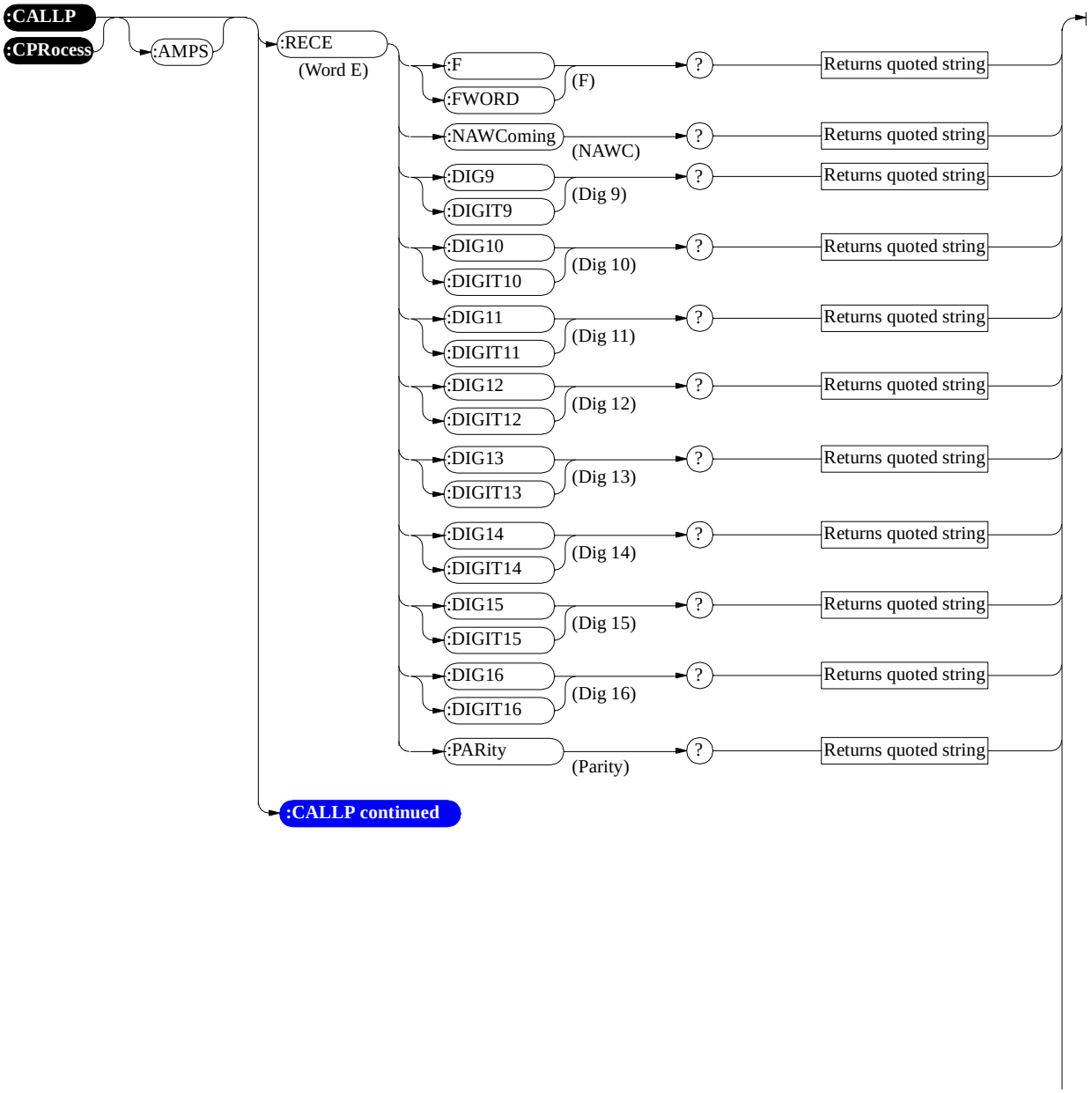

ManualsPlus.com

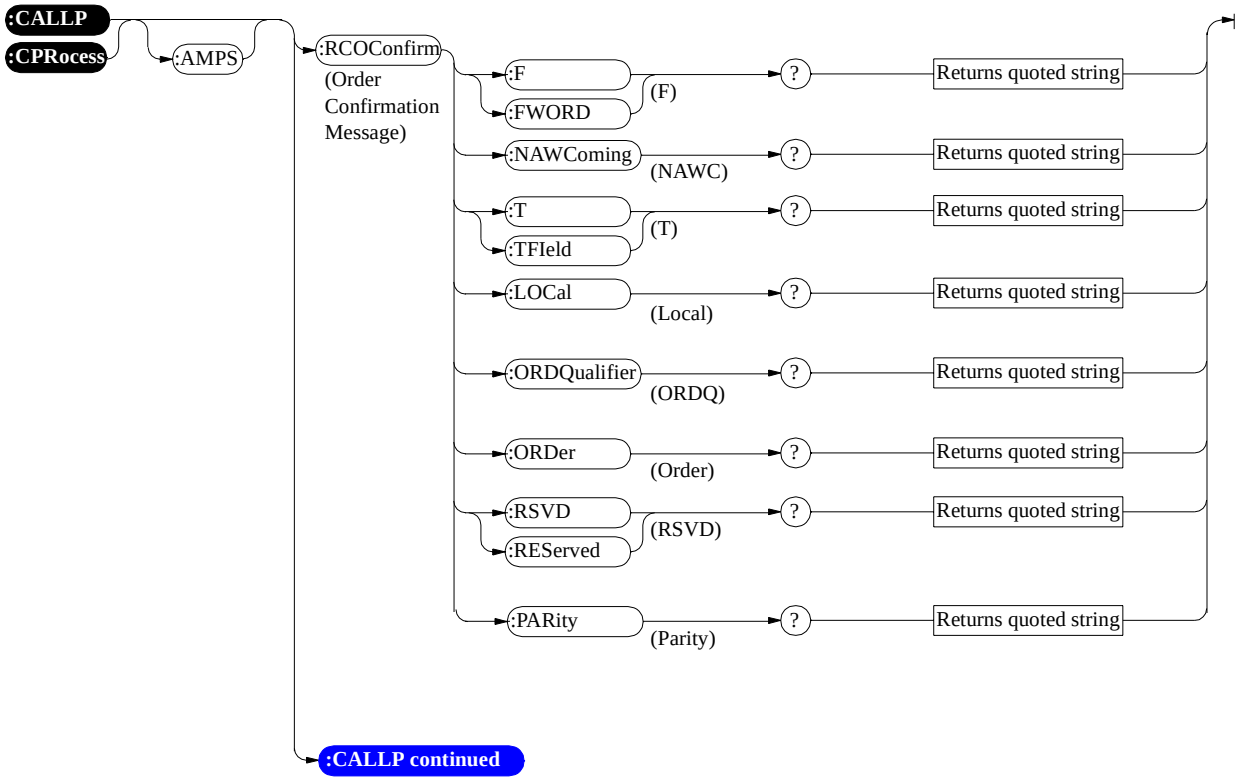

ManualsPlus.com

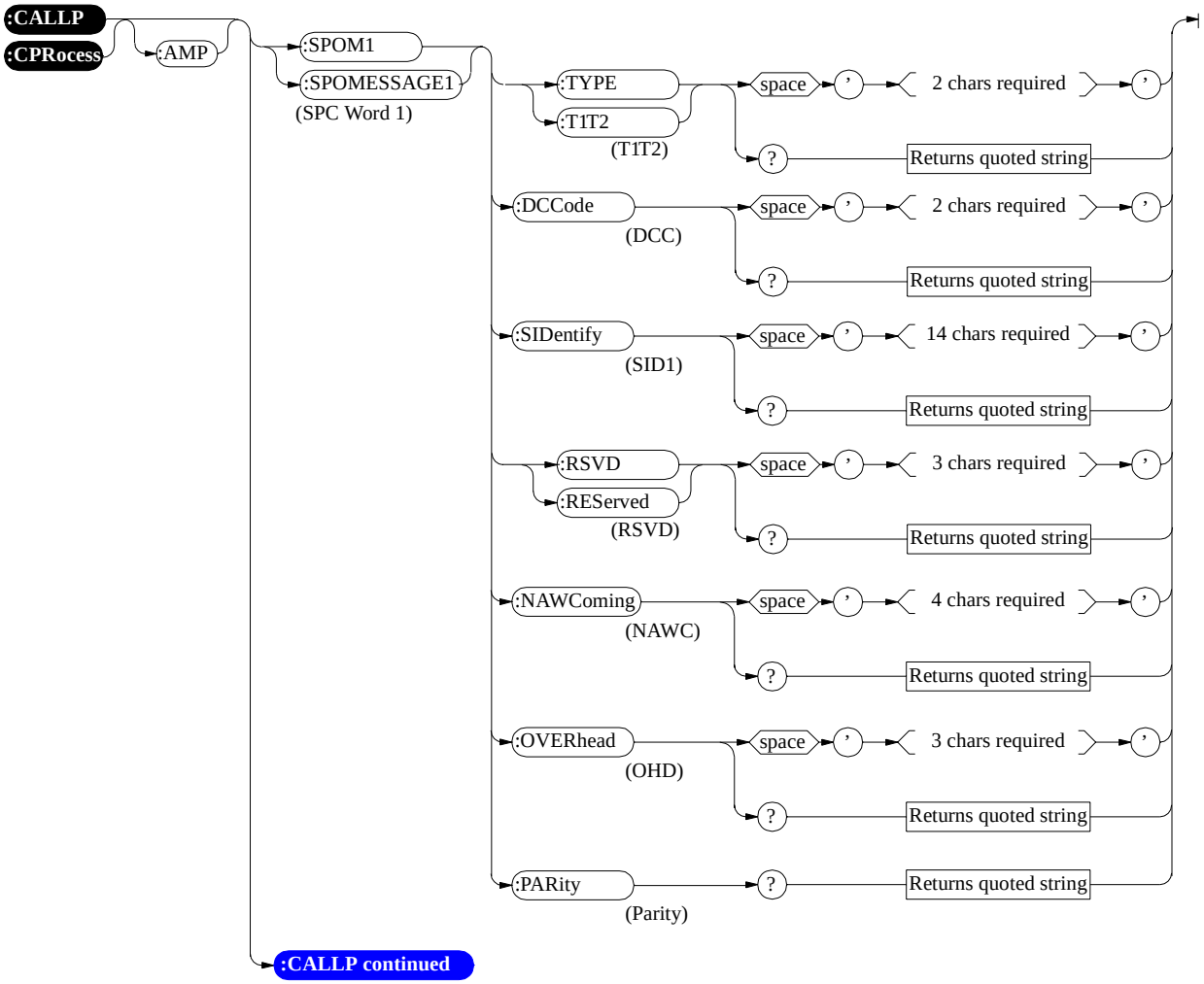

ManualsPlus.com

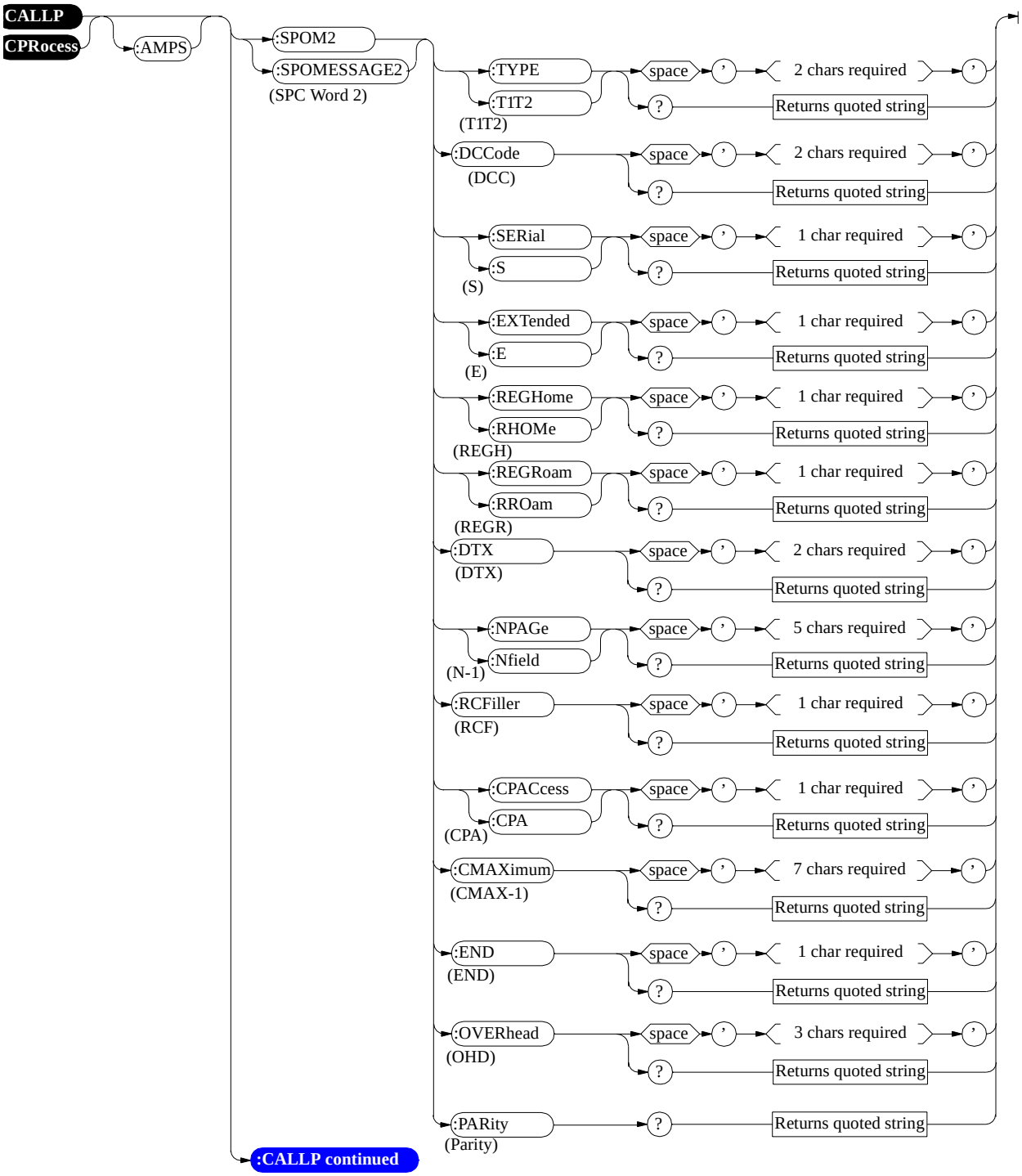

ManualsPlus.com

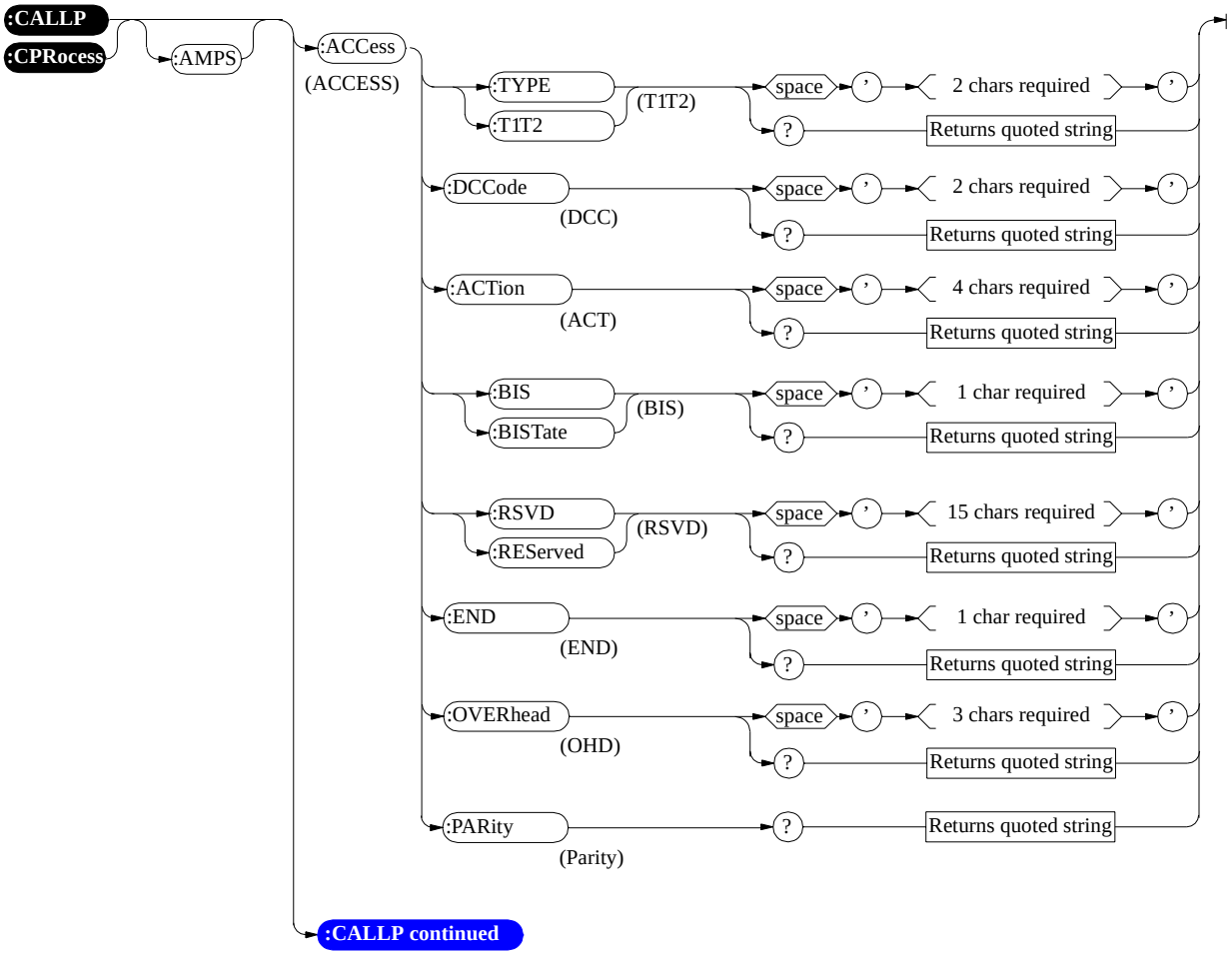

ManualsPlus.com

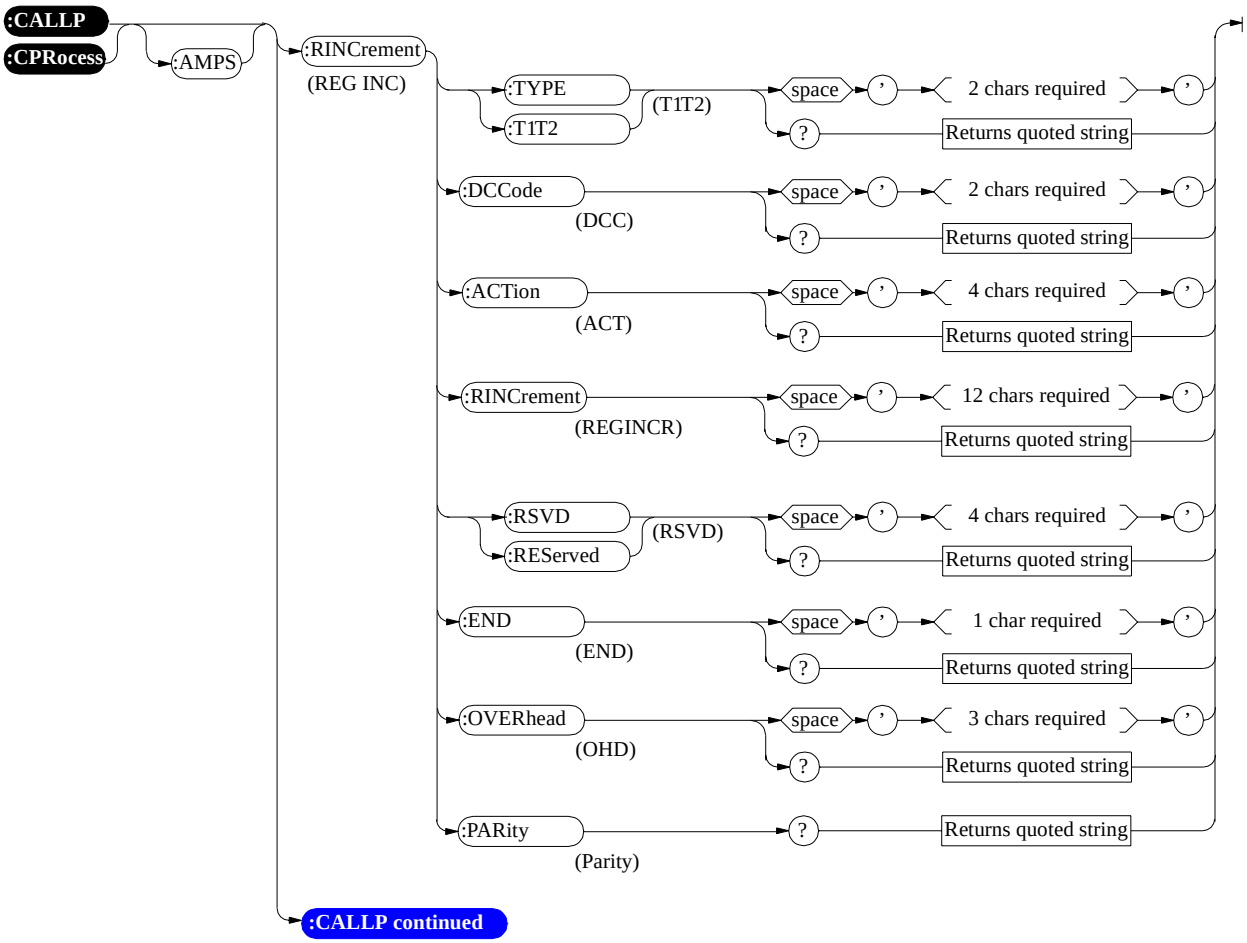

ManualsPlus.com

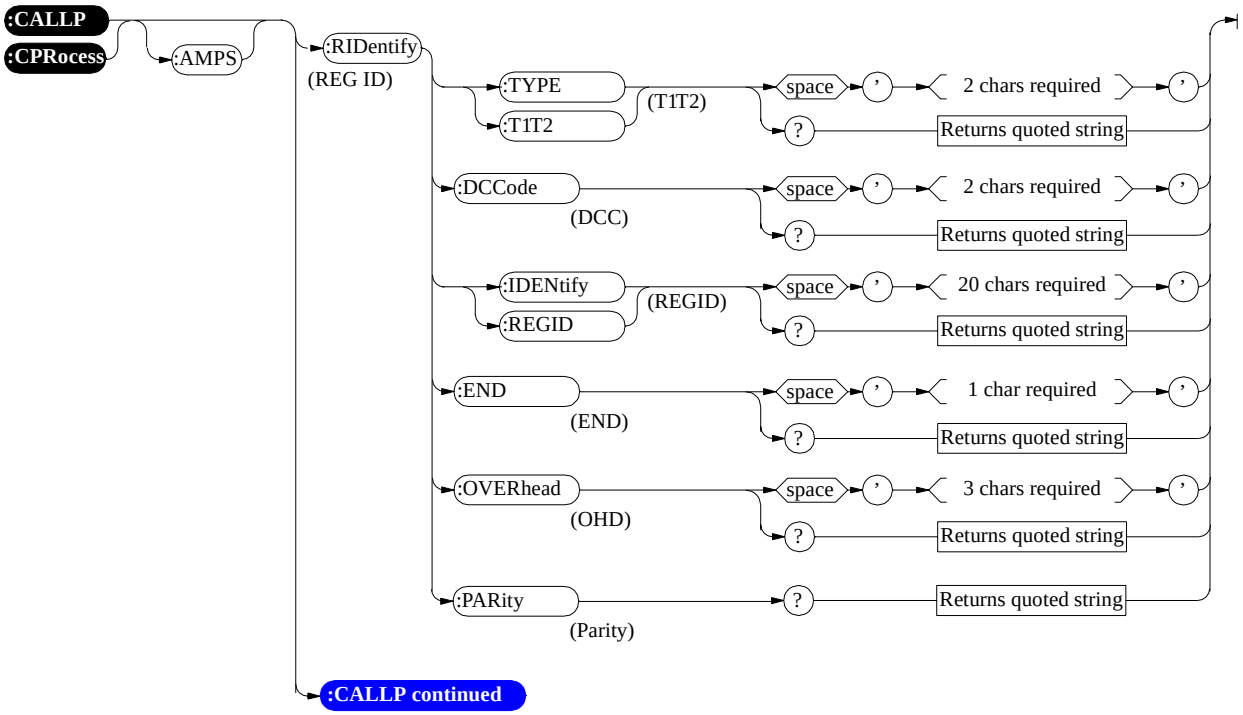

ManualsPlus.com

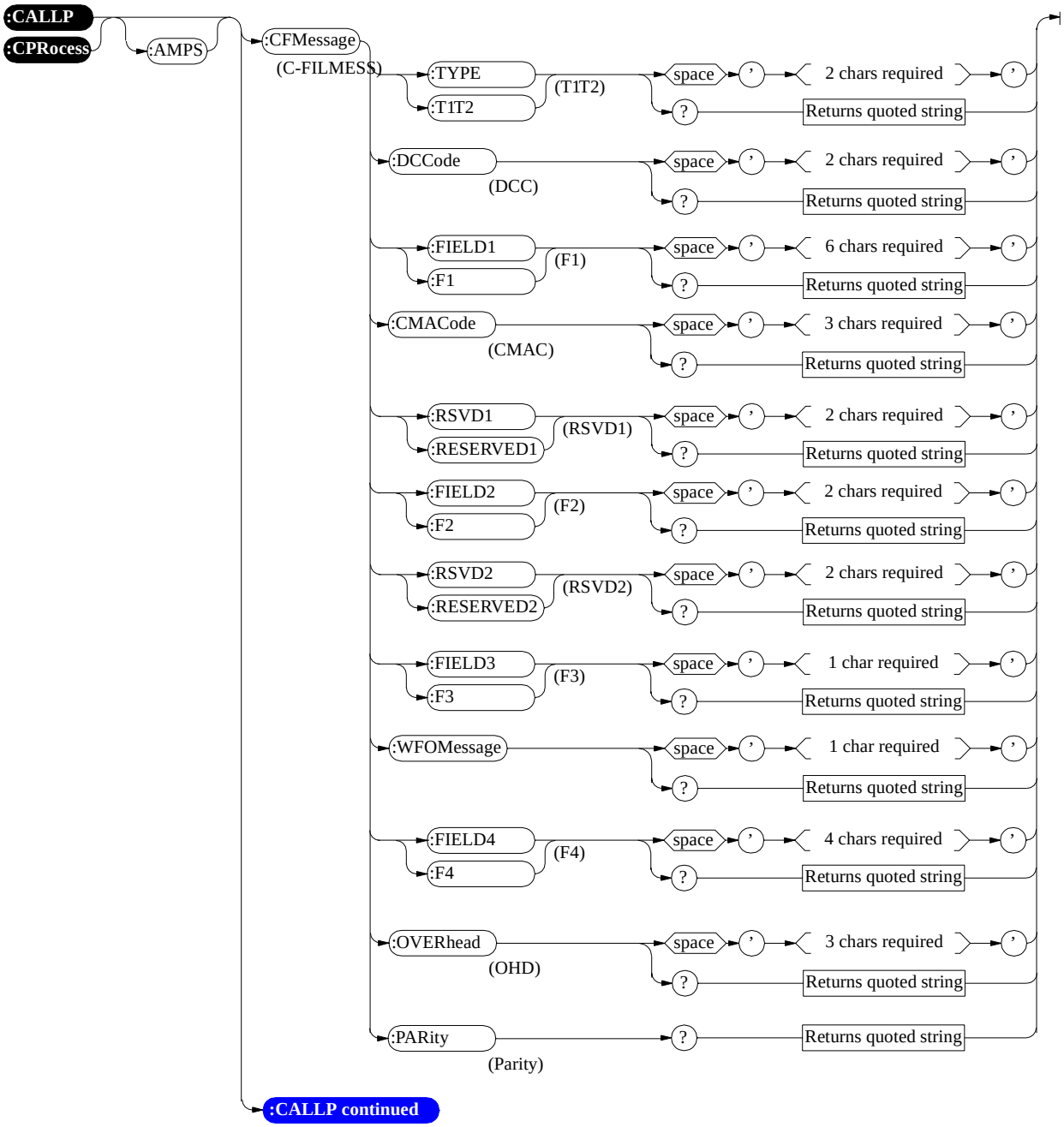

ManualsPlus.com

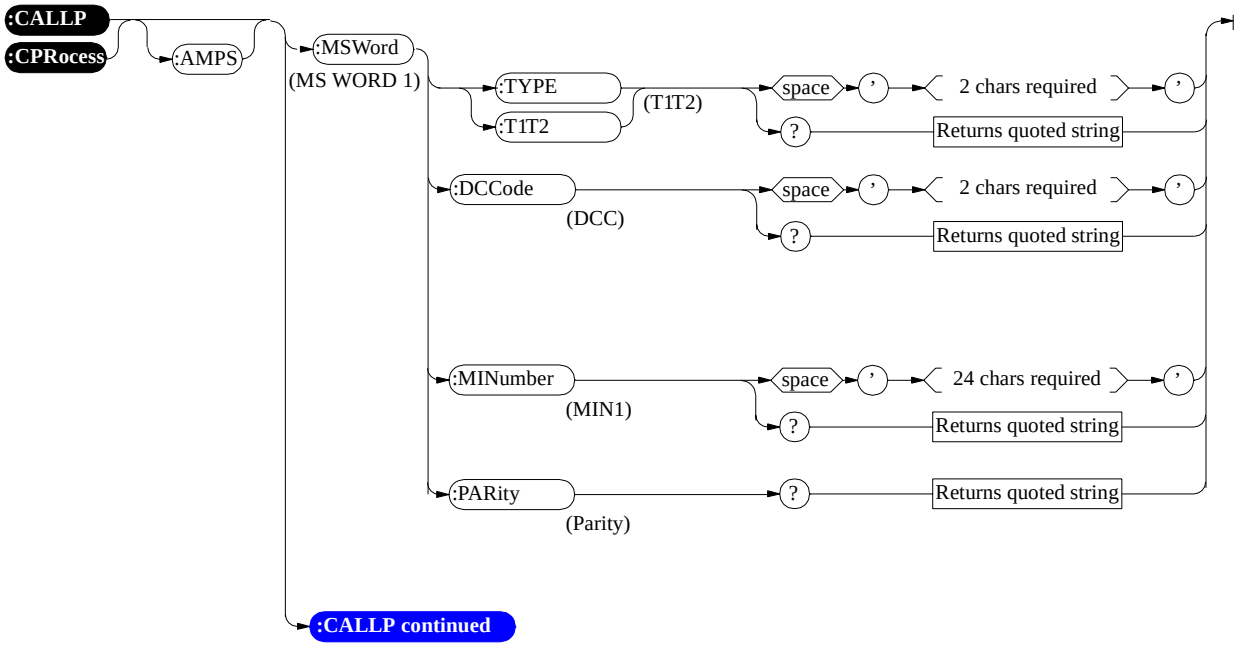

ManualsPlus.com

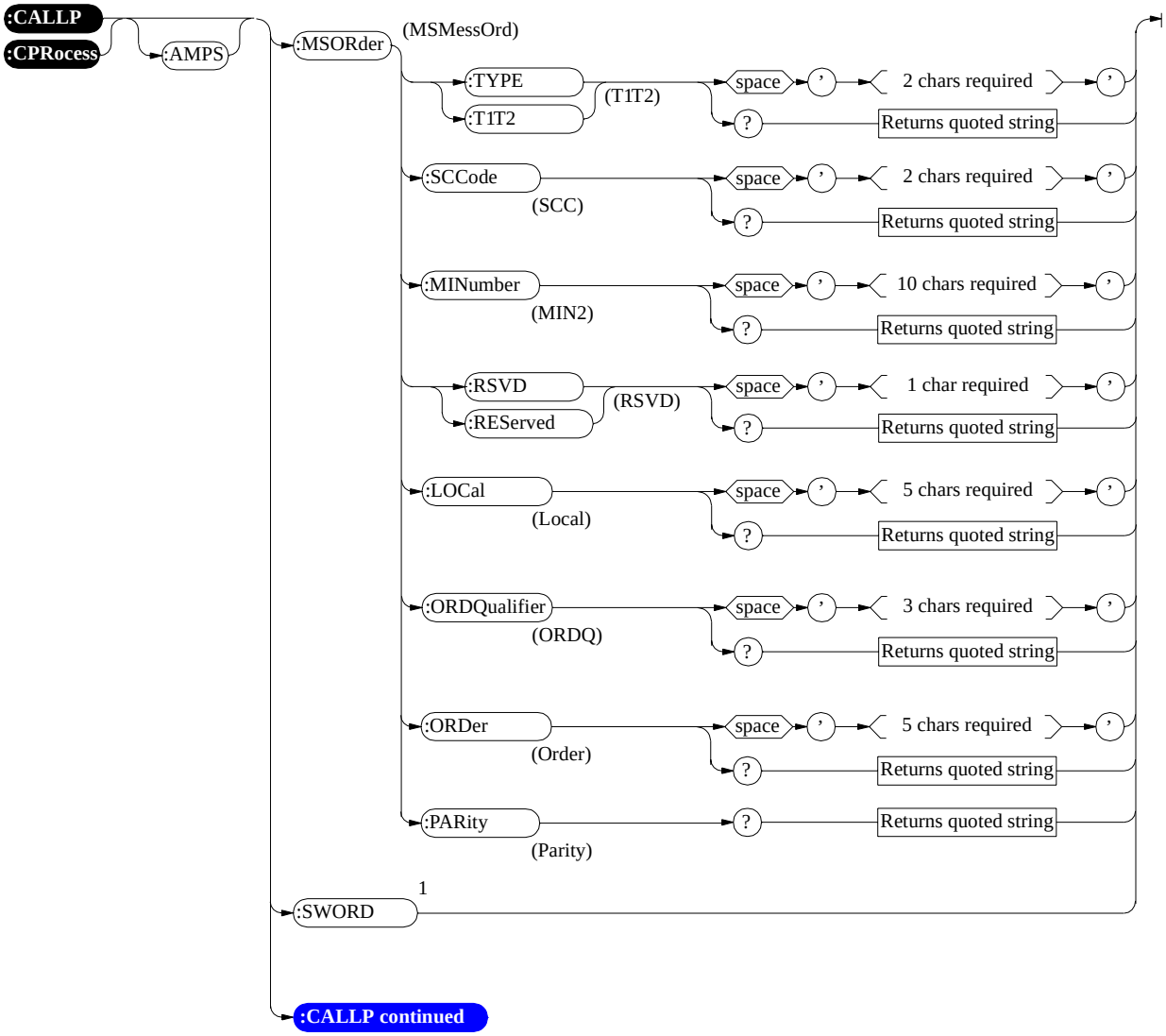

[1]SWORD will issue a single overhead word and is only supported for MSMessOrd and MSORder. See **"Send Word" on page 566** for programming information.

ManualsPlus.com

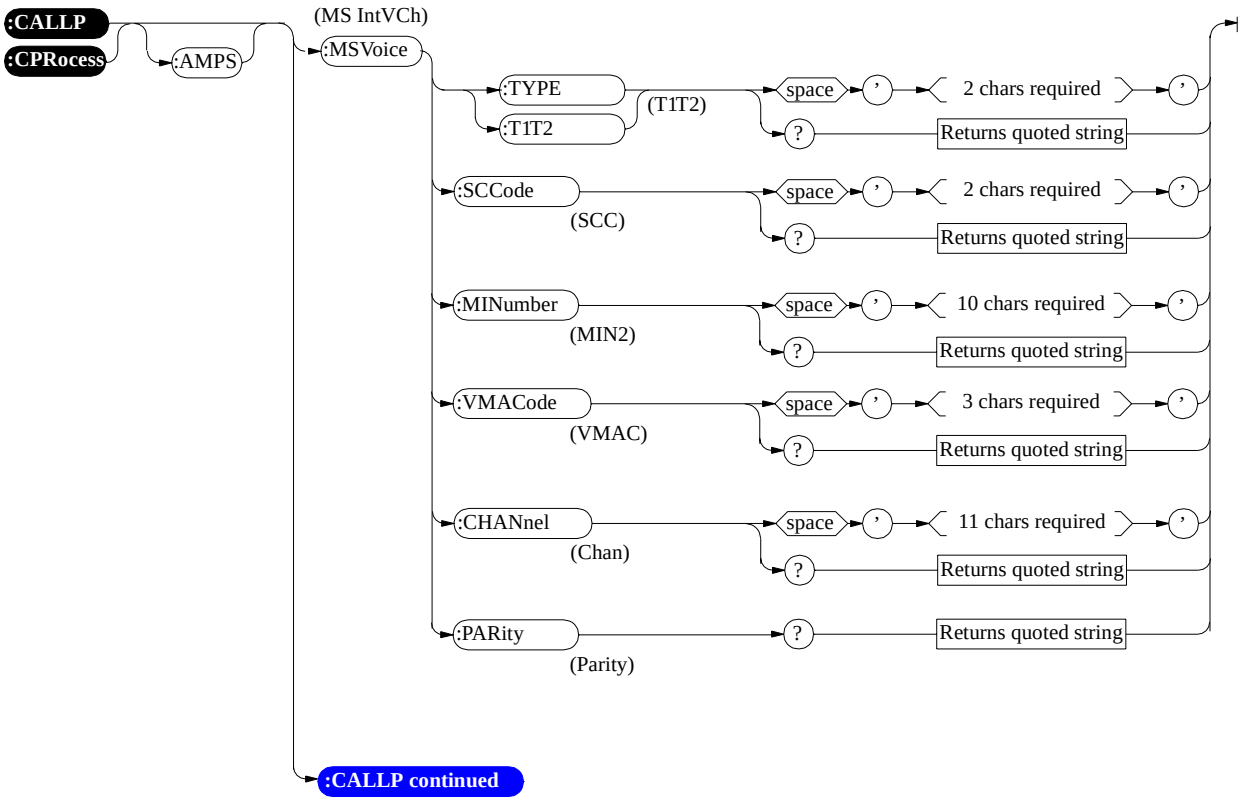

ManualsPlus.com

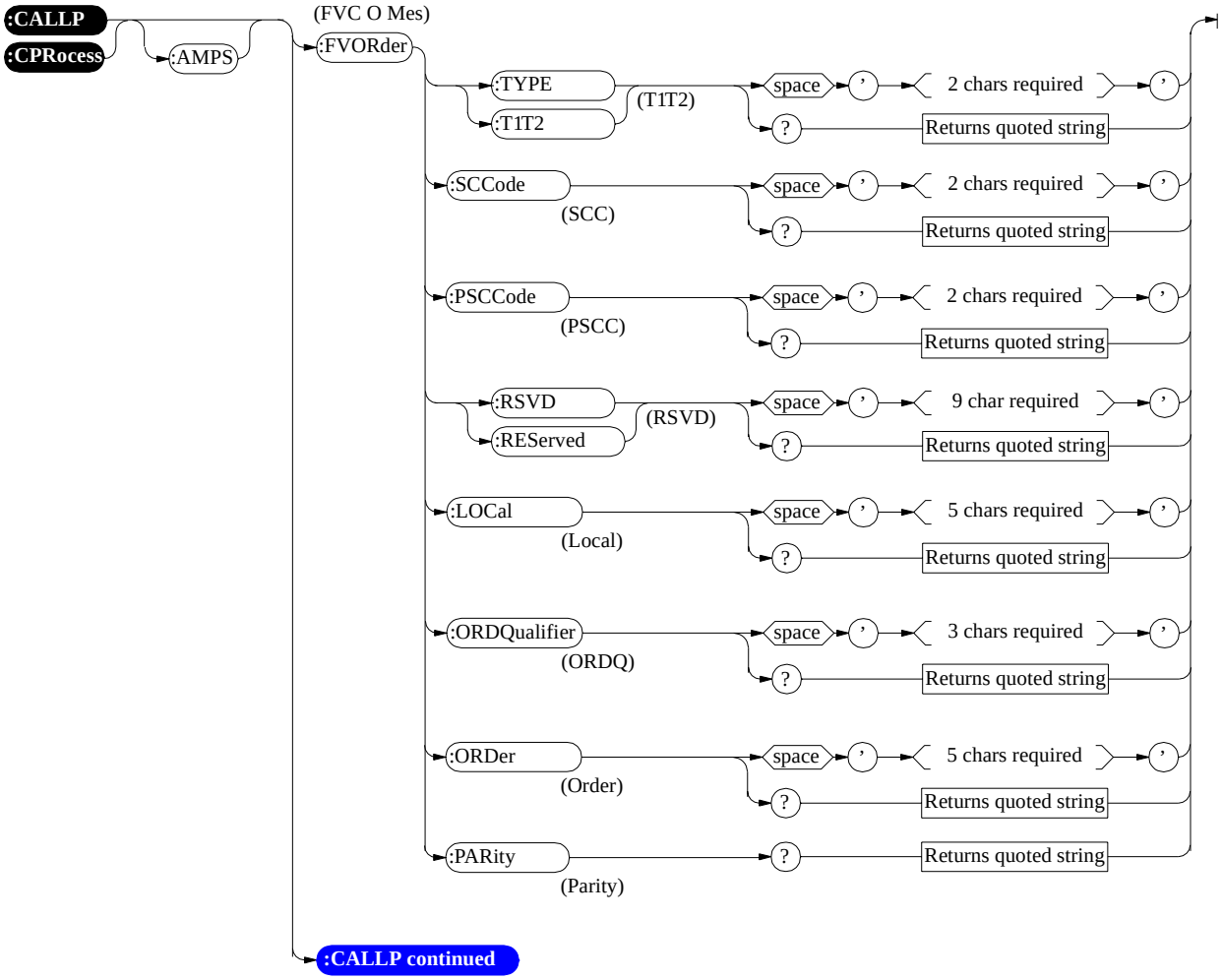

ManualsPlus.com

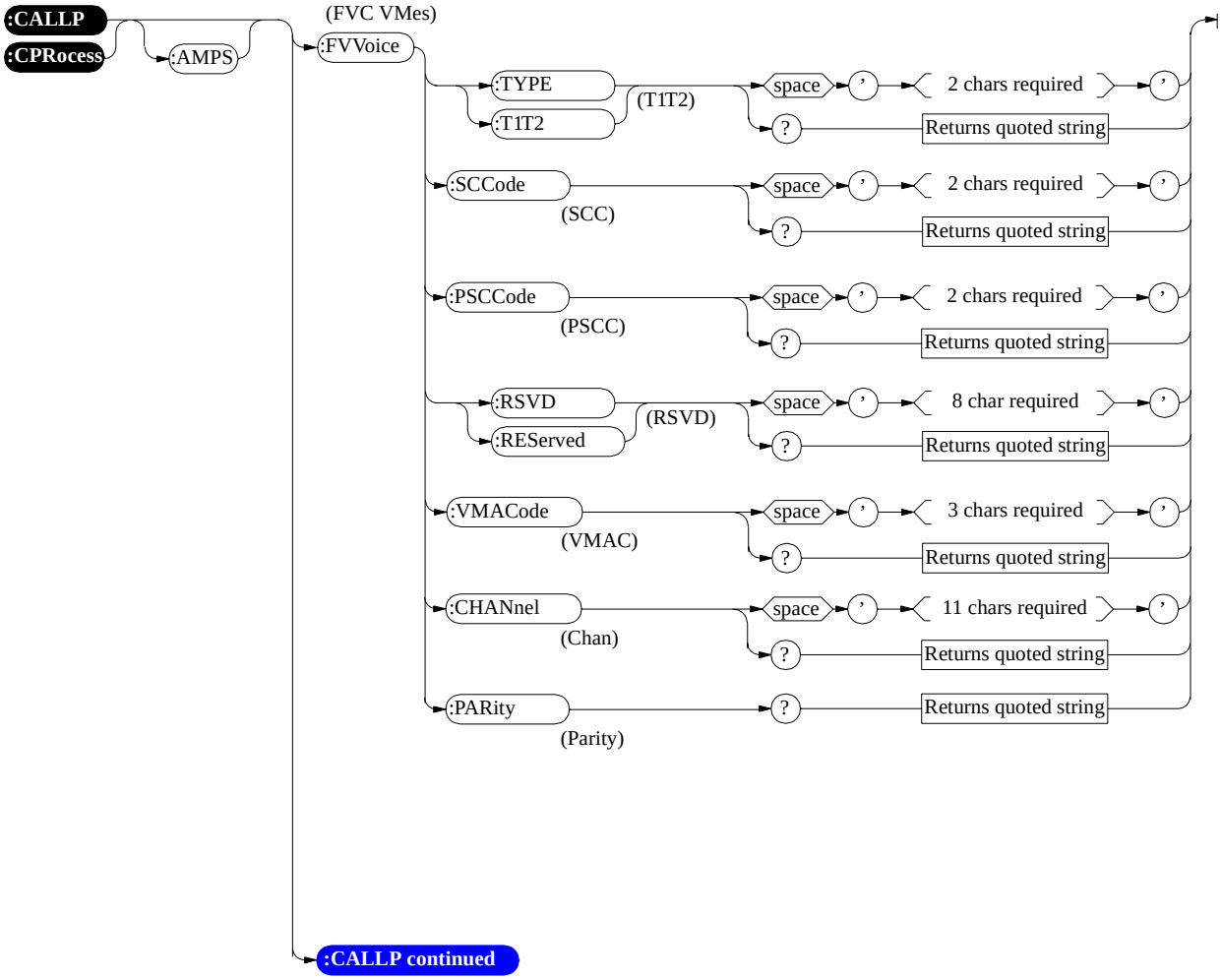

ManualsPlus.com

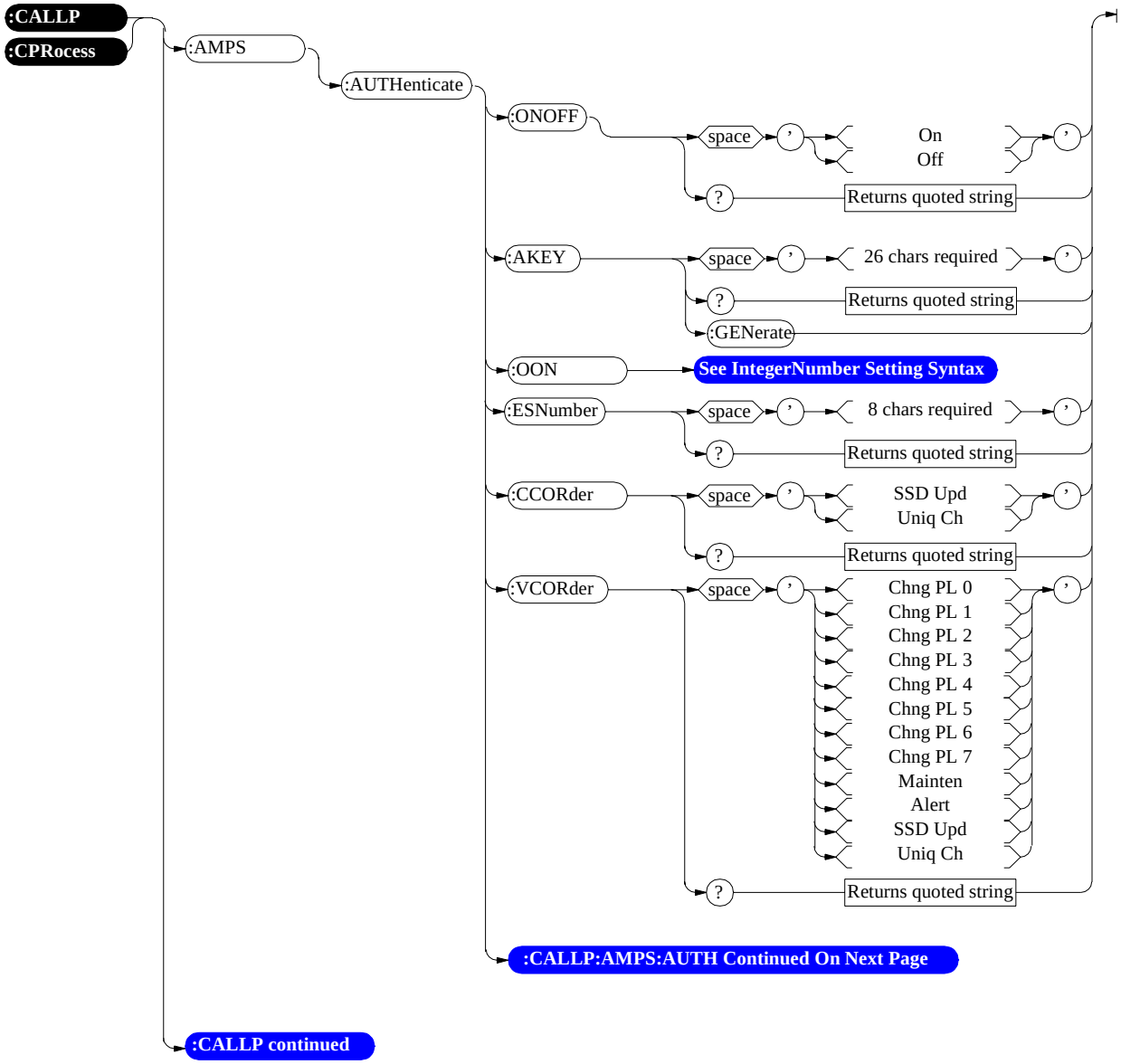

ManualsPlus.com

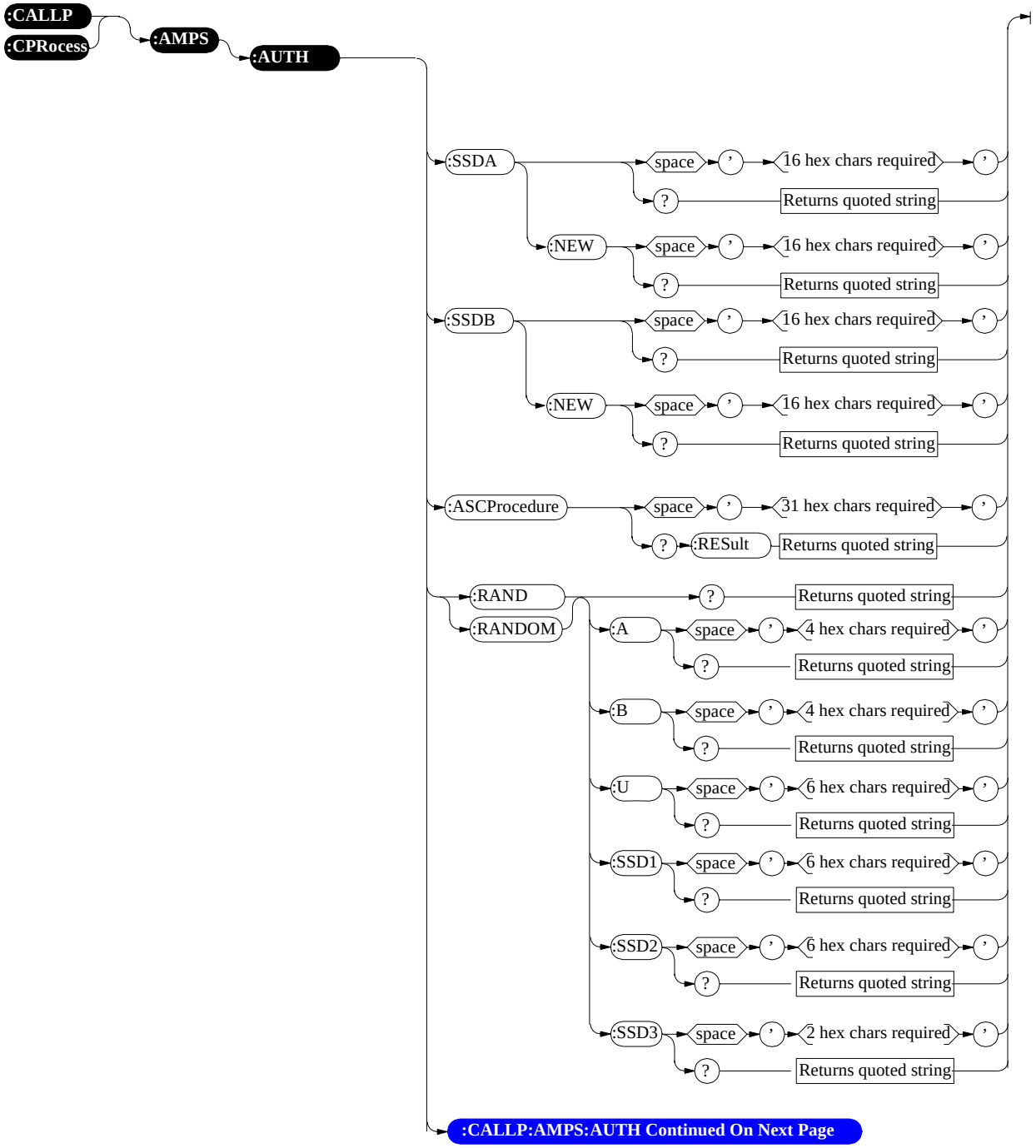

ManualsPlus.com

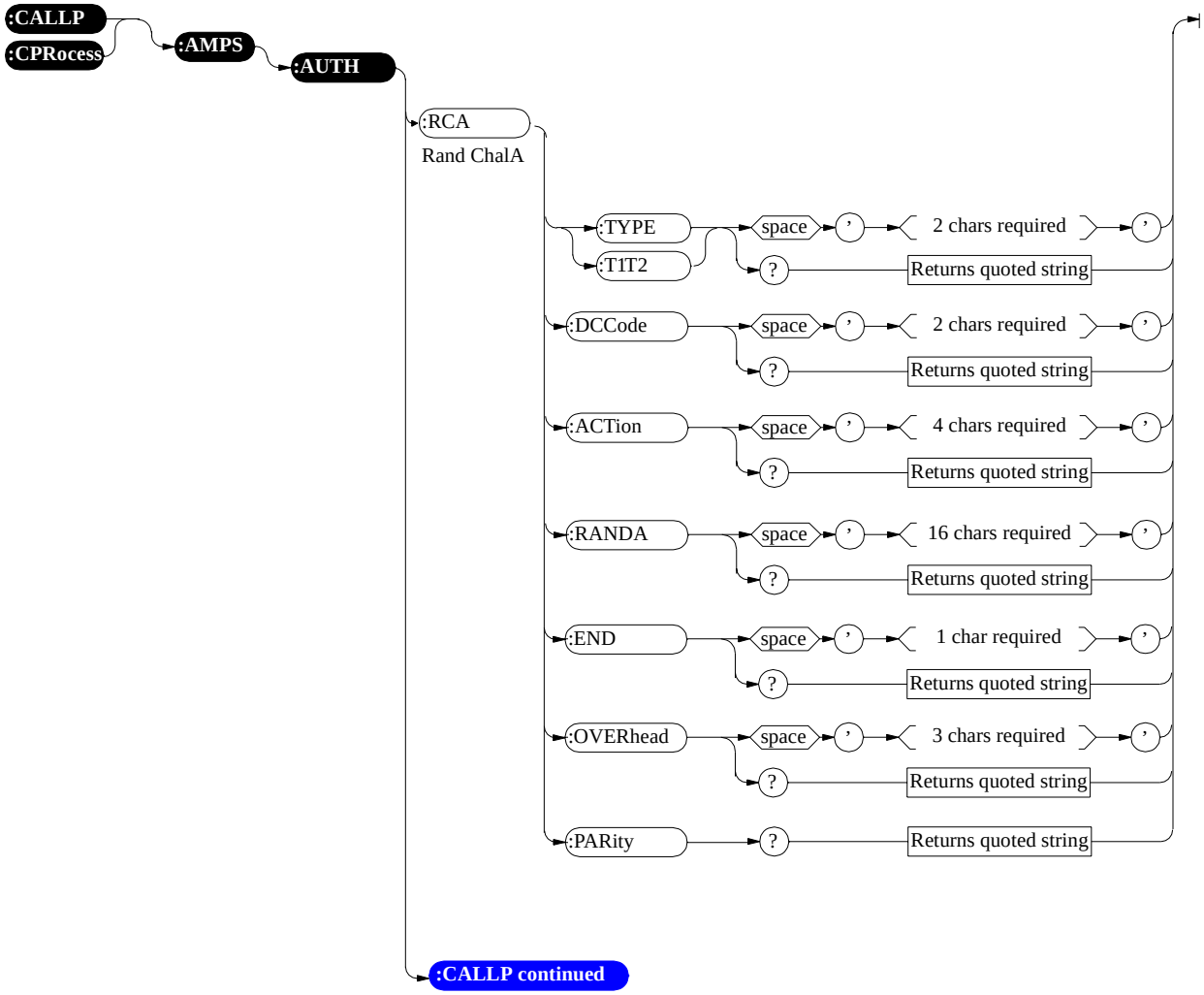

ManualsPlus.com

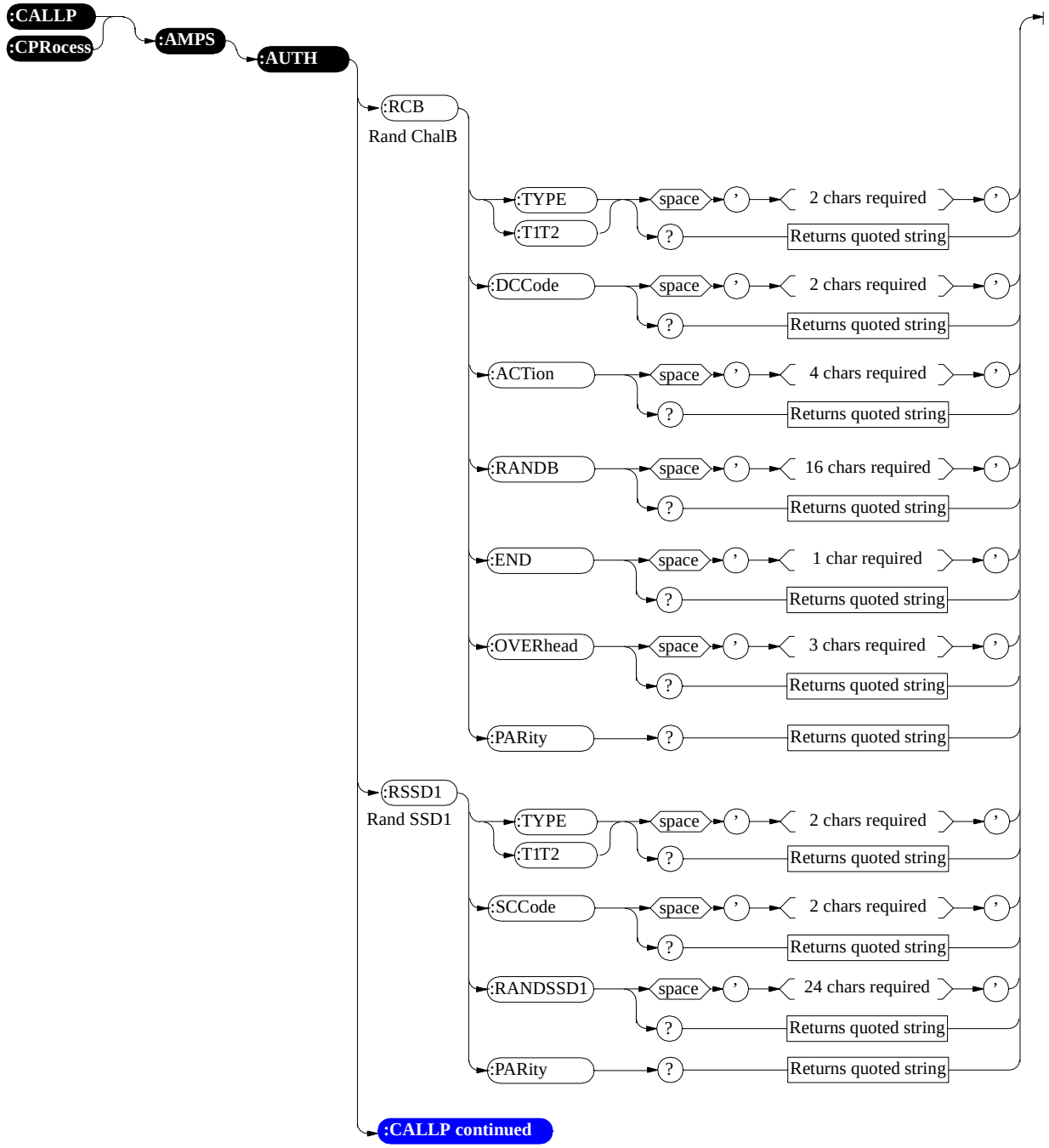

ManualsPlus.com

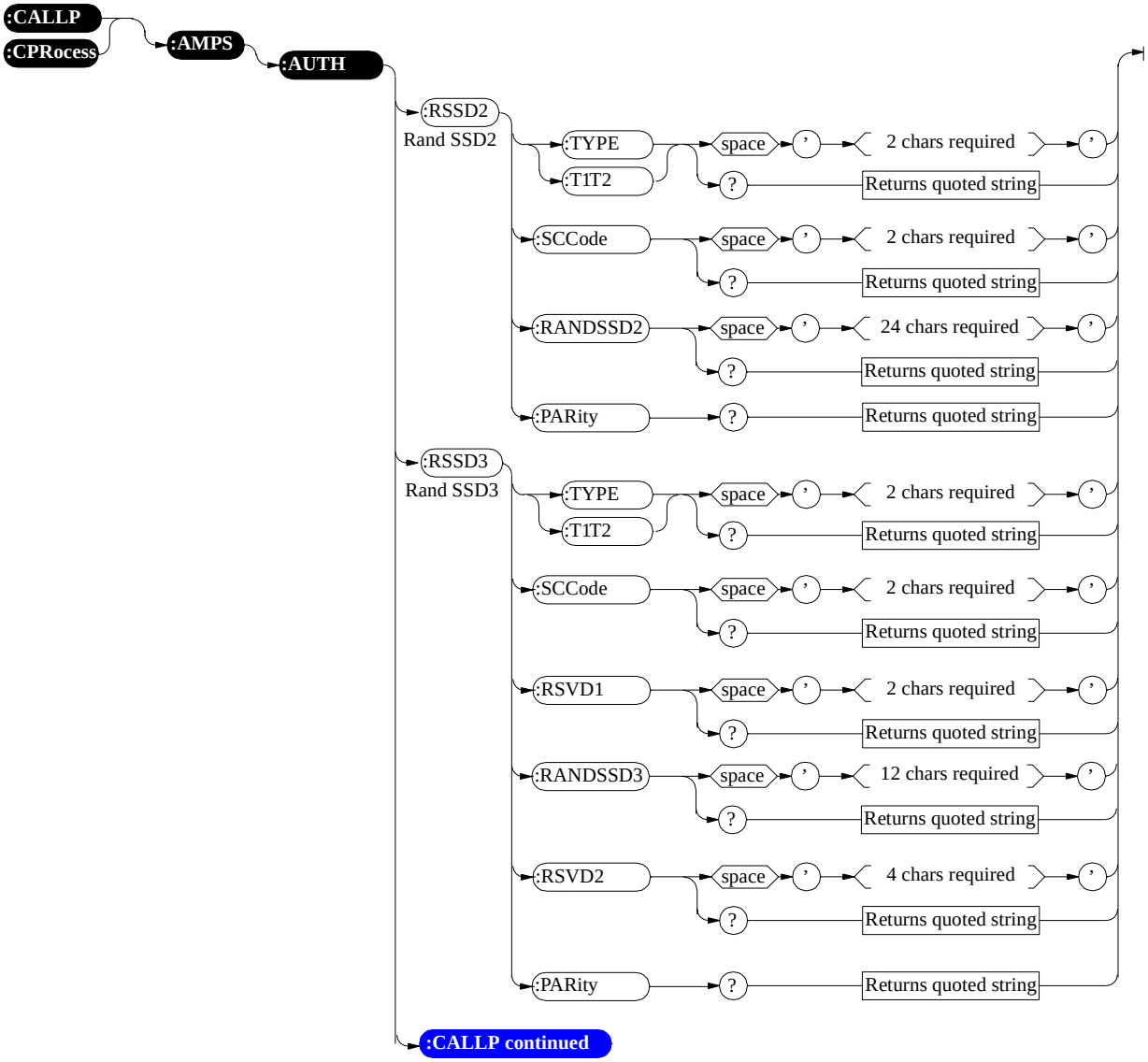

ManualsPlus.com

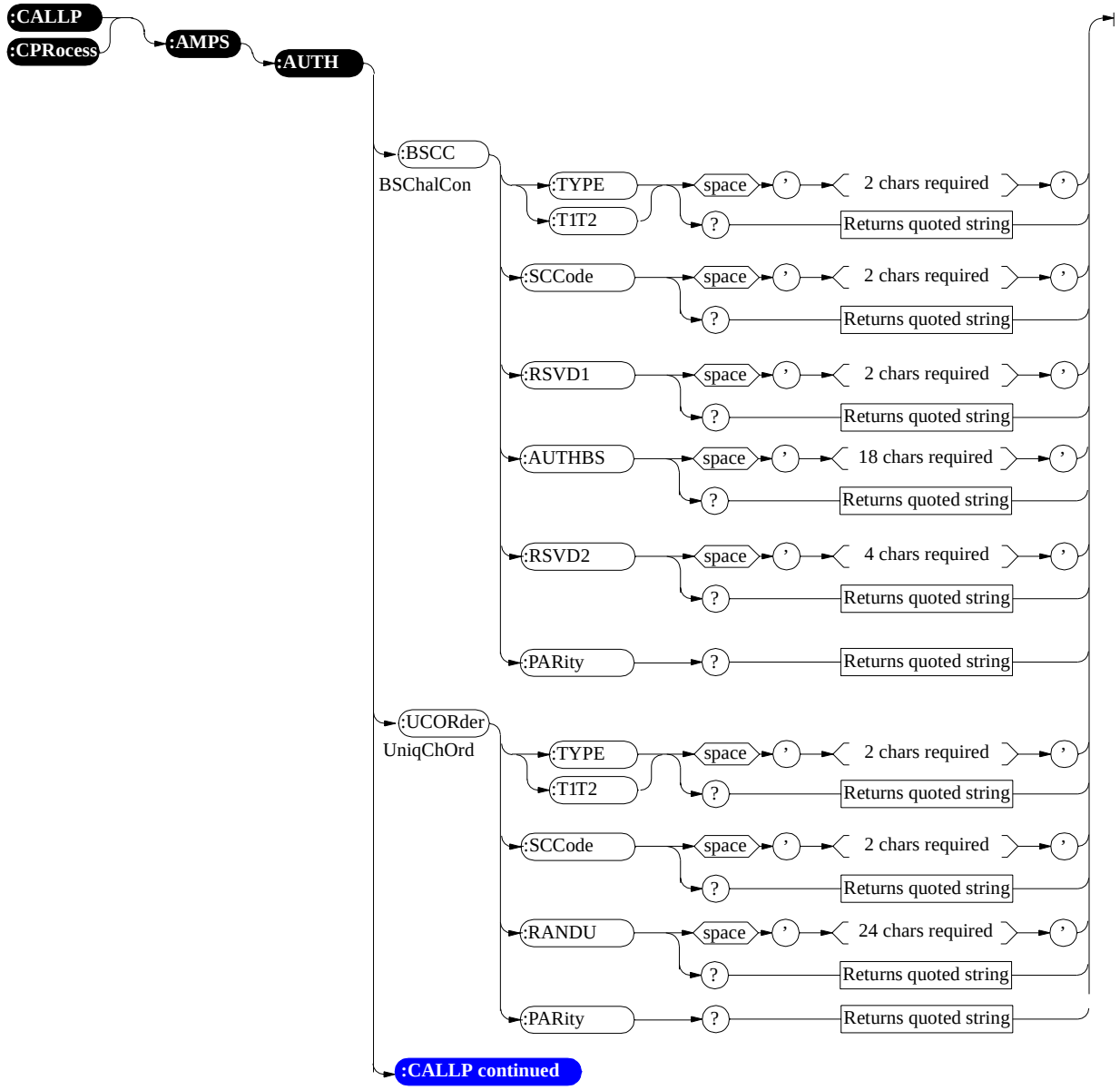

ManualsPlus.com

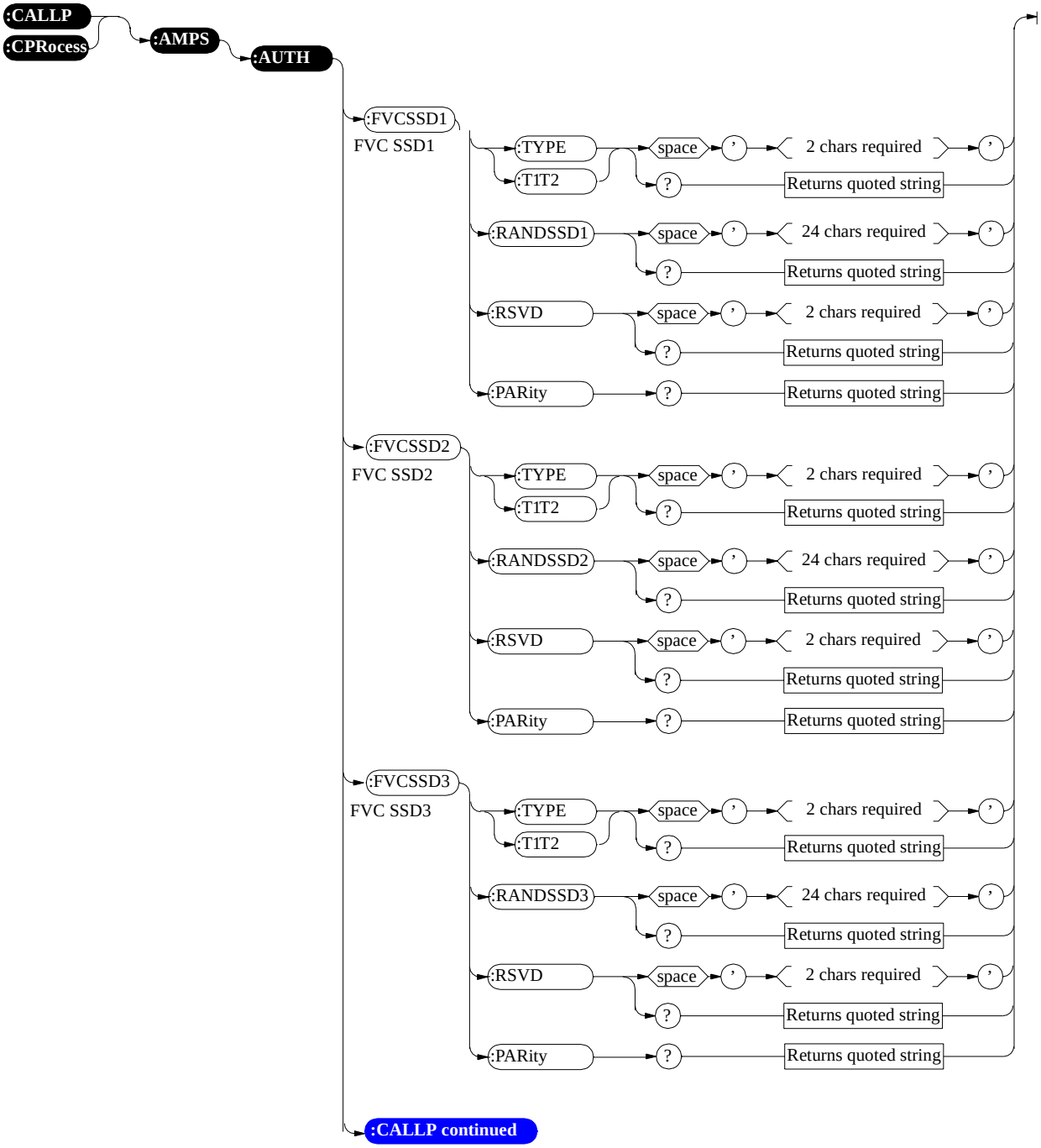

ManualsPlus.com

ManualsPlus.com

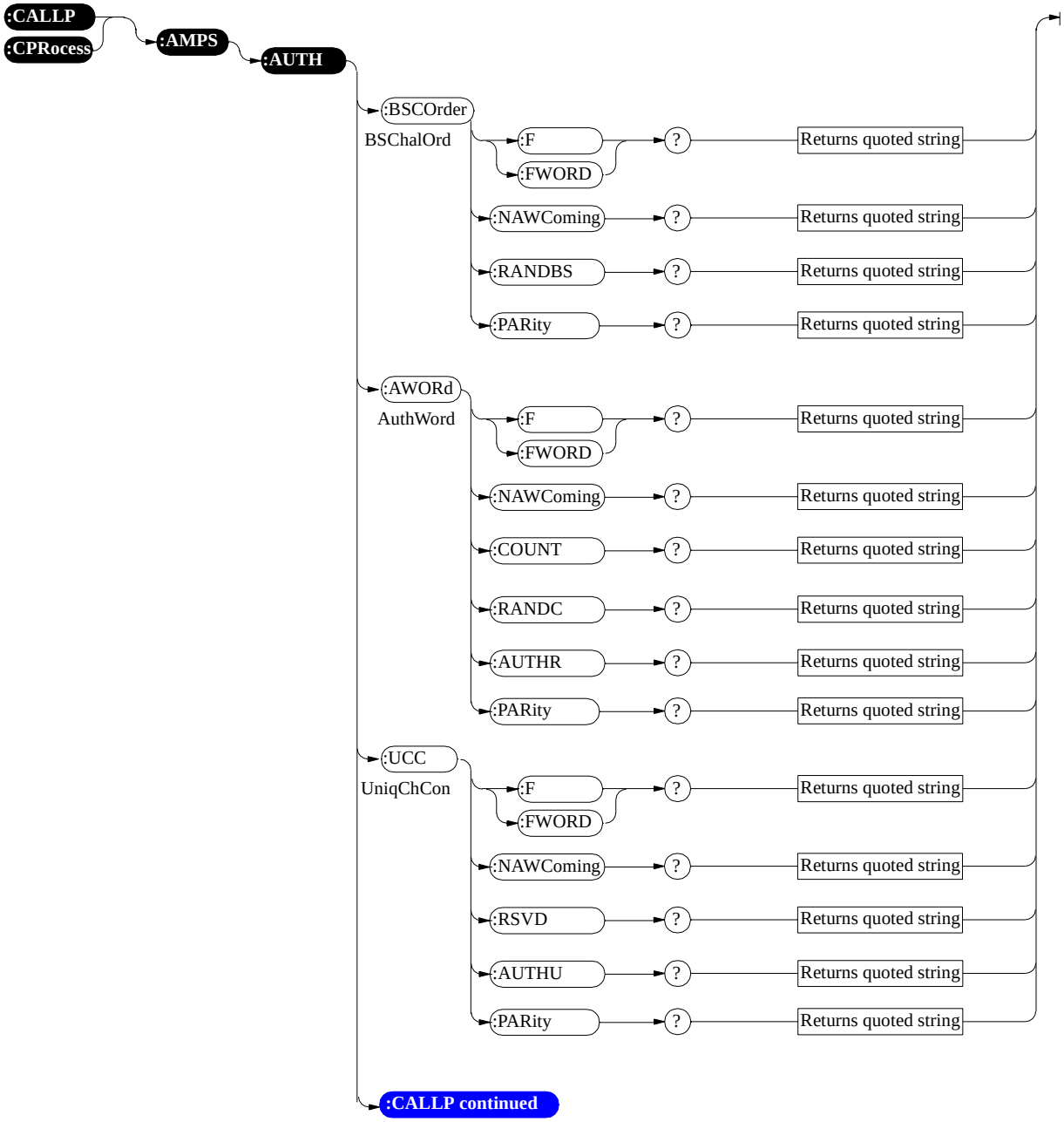

ManualsPlus.com

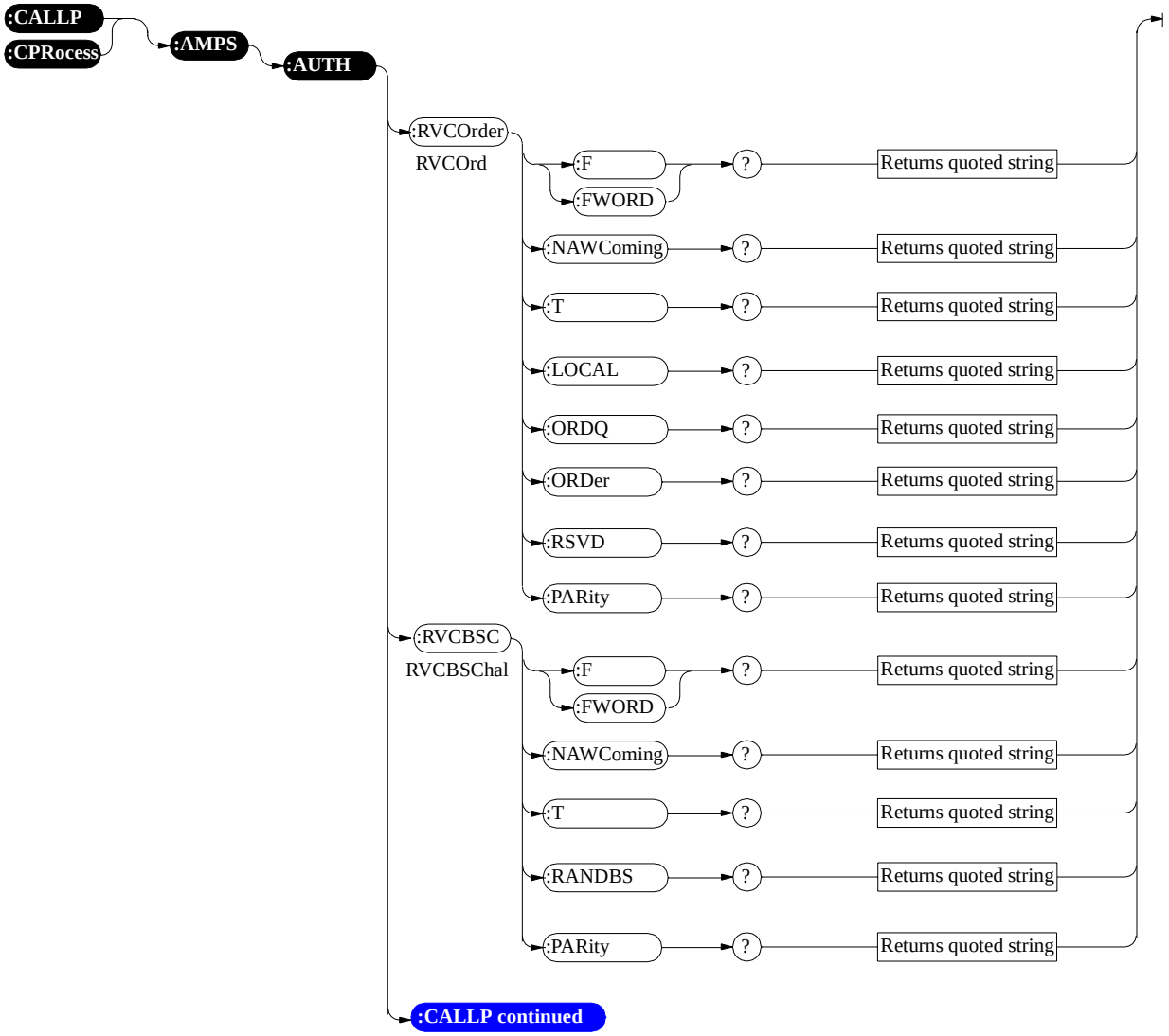

ManualsPlus.com

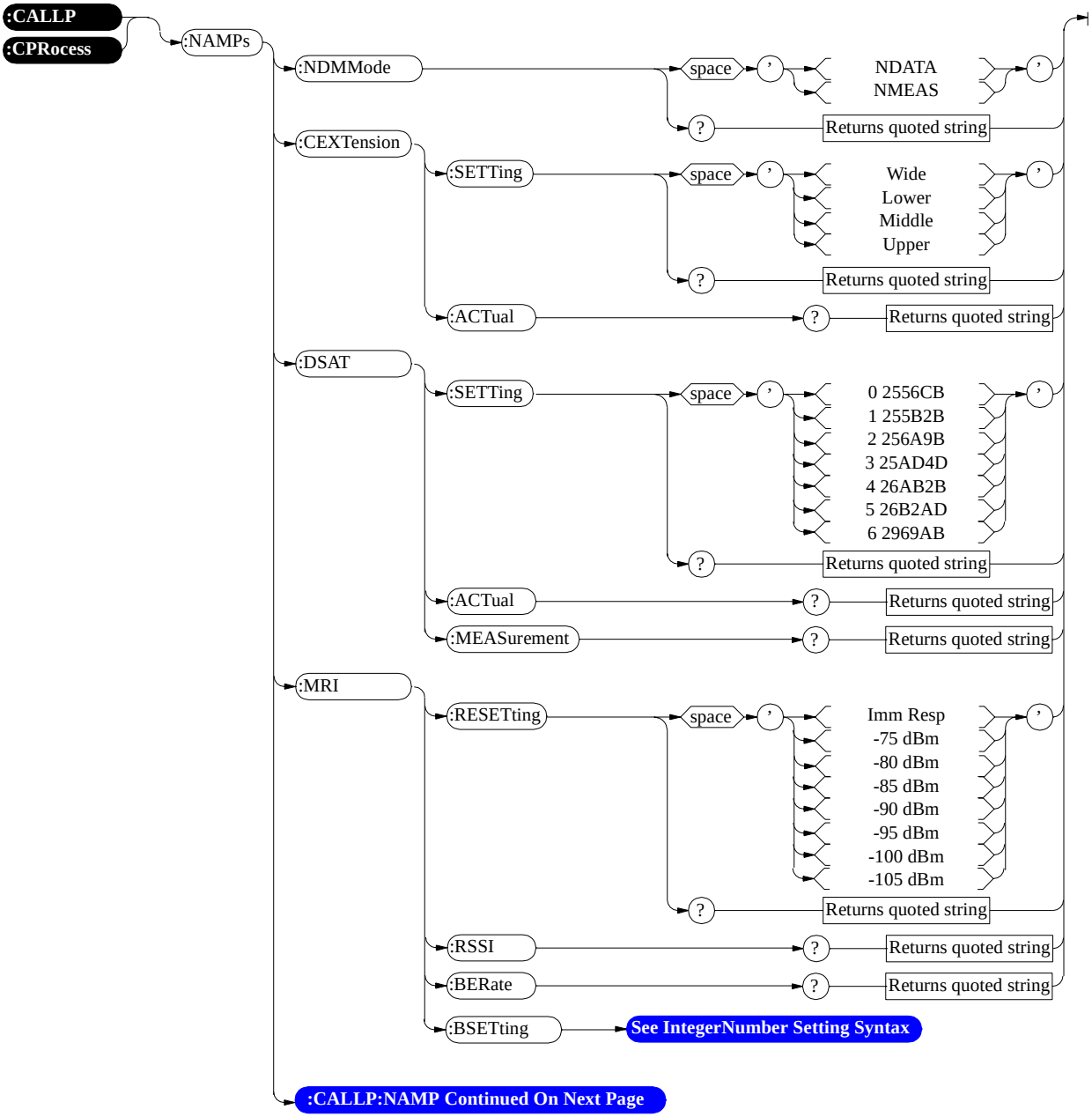

ManualsPlus.com

ManualsPlus.com

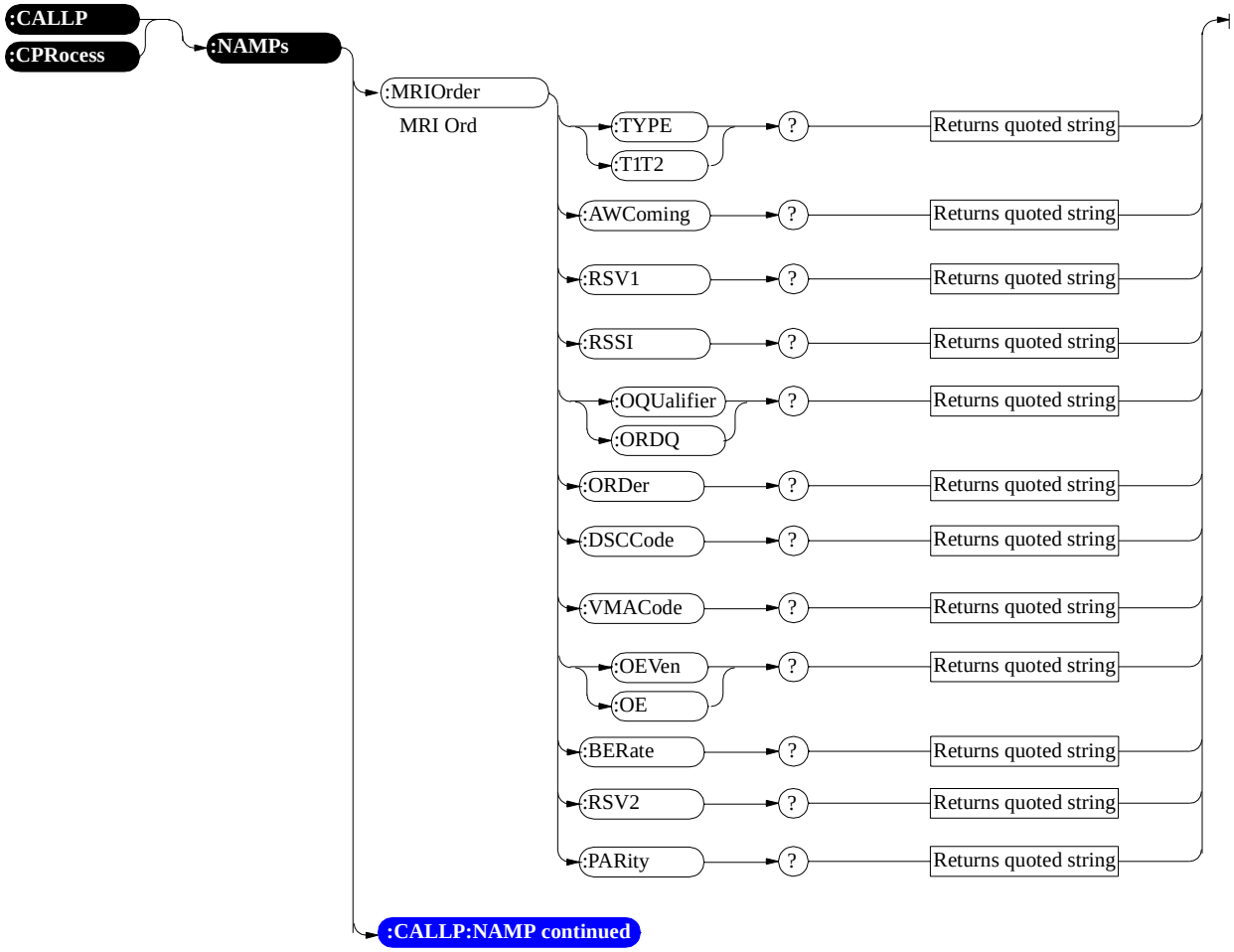

ManualsPlus.com

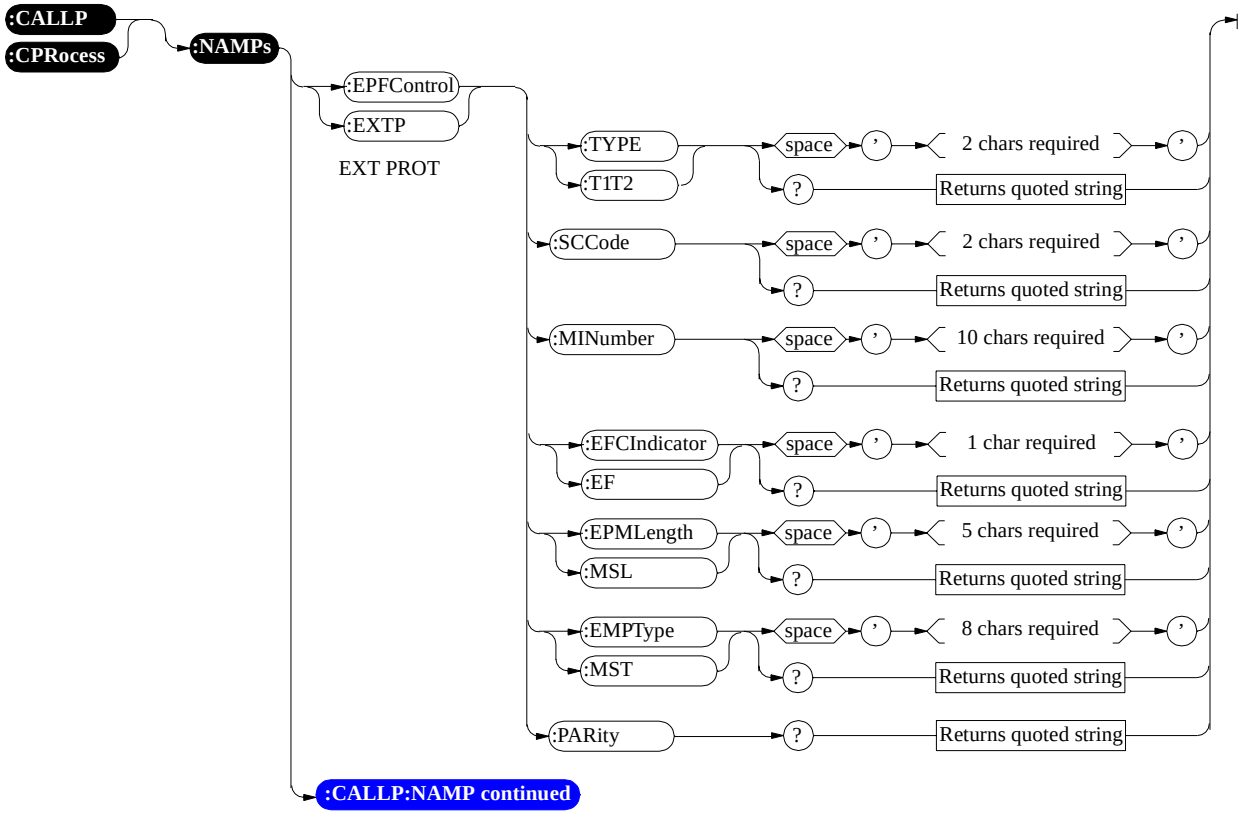

ManualsPlus.com

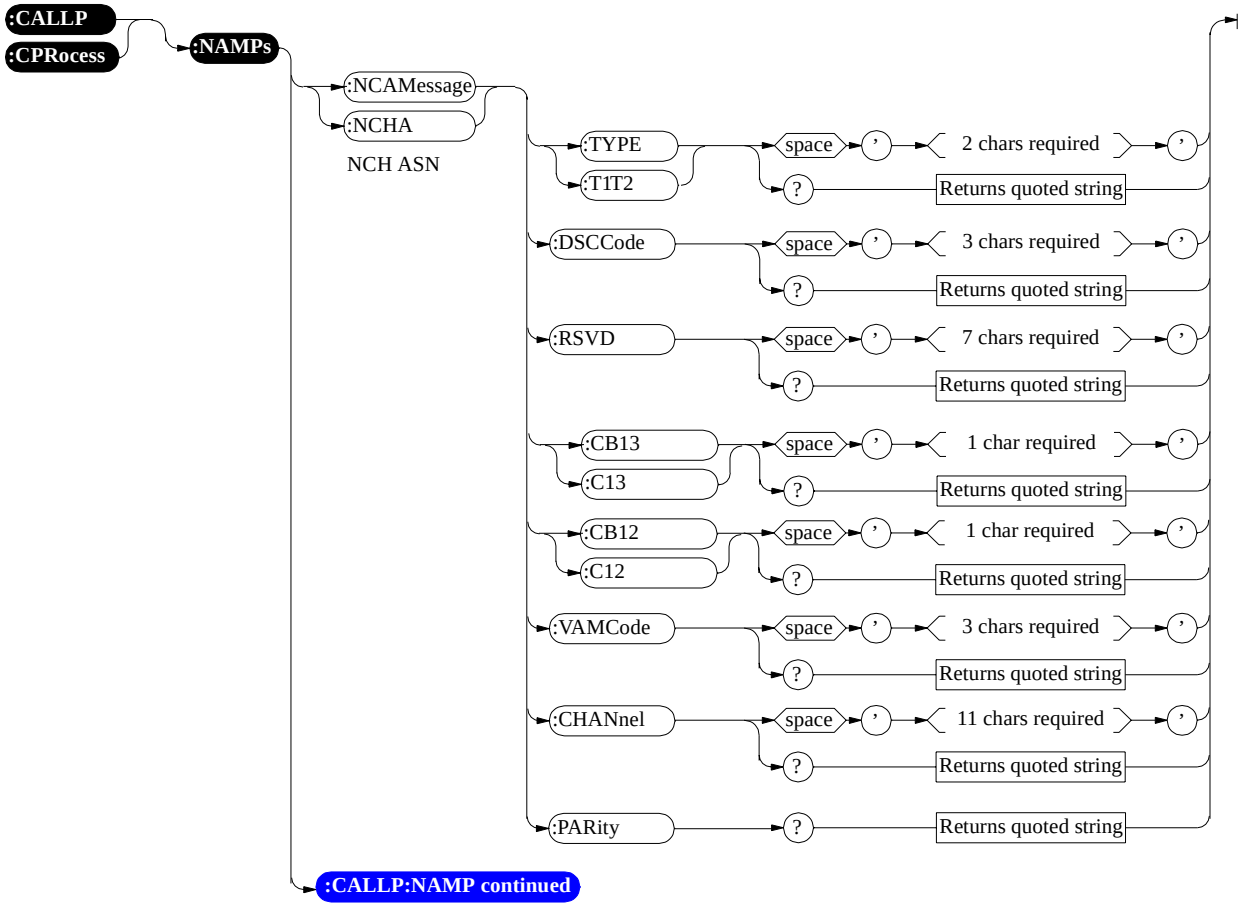

ManualsPlus.com

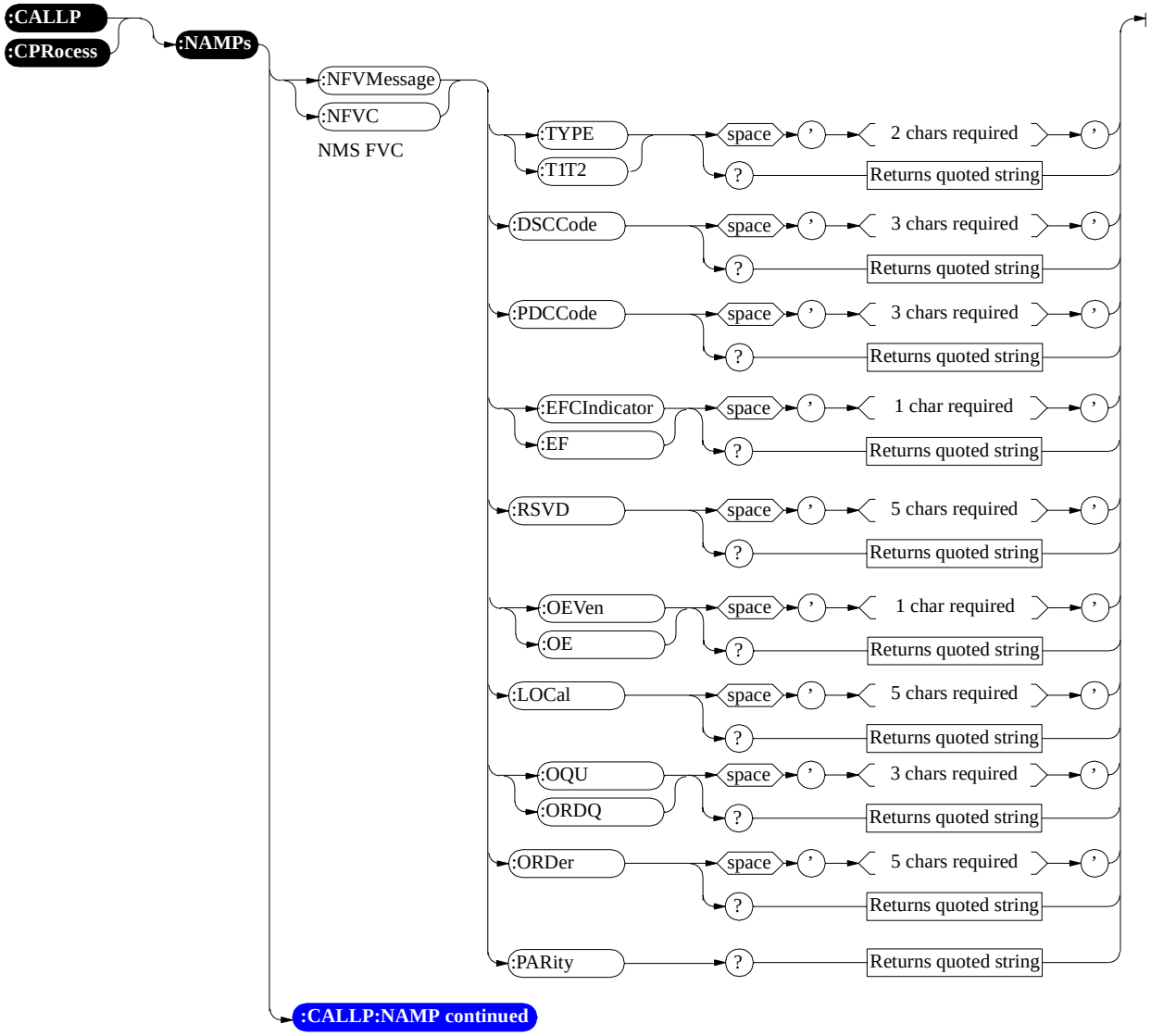

ManualsPlus.com

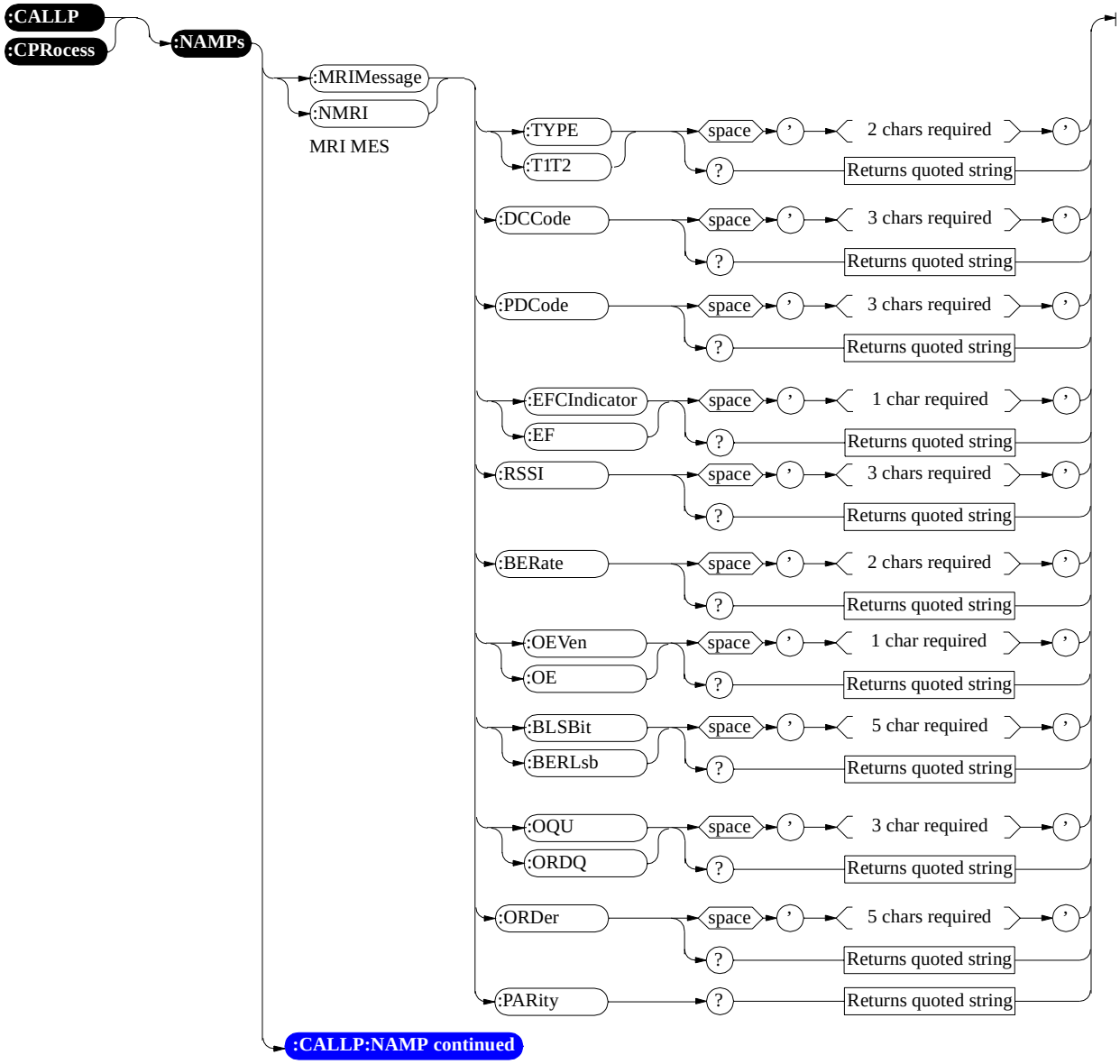

ManualsPlus.com

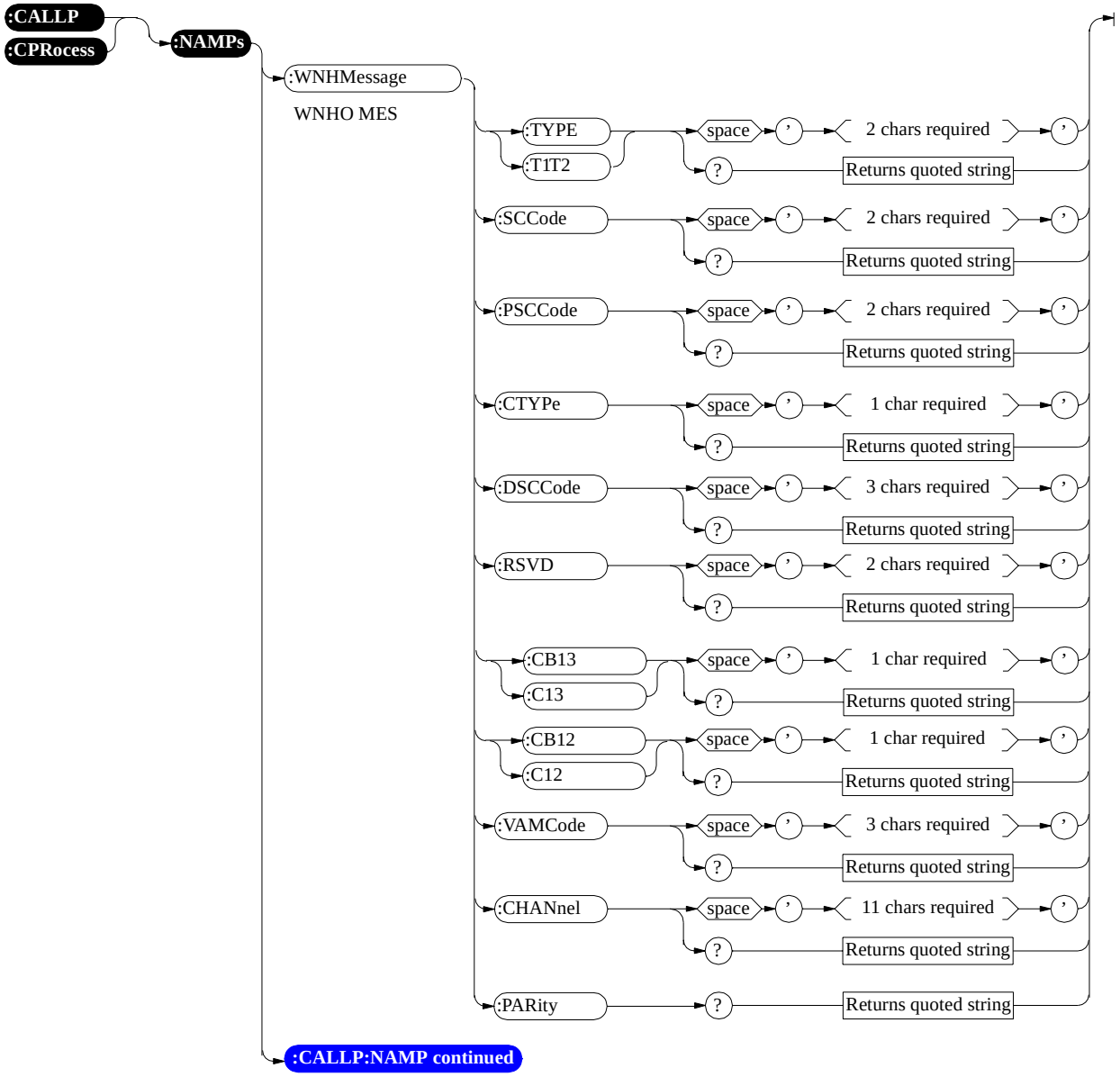

ManualsPlus.com

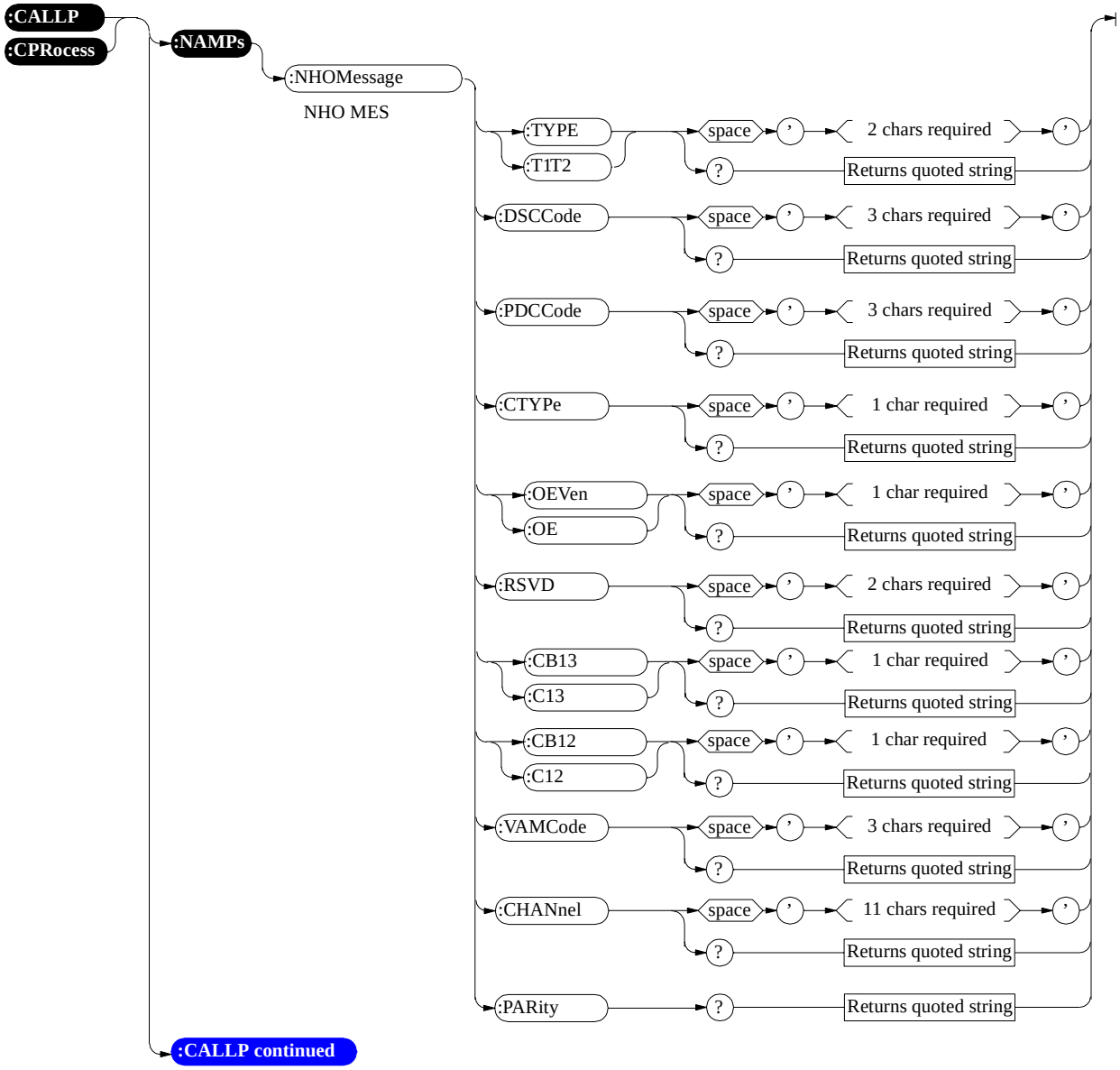

ManualsPlus.com

ManualsPlus.com

Decoder

For Decoder measurements see the MEASure command diagram.

For selecting Decoder Input, see AF Anaylzer command diagram.

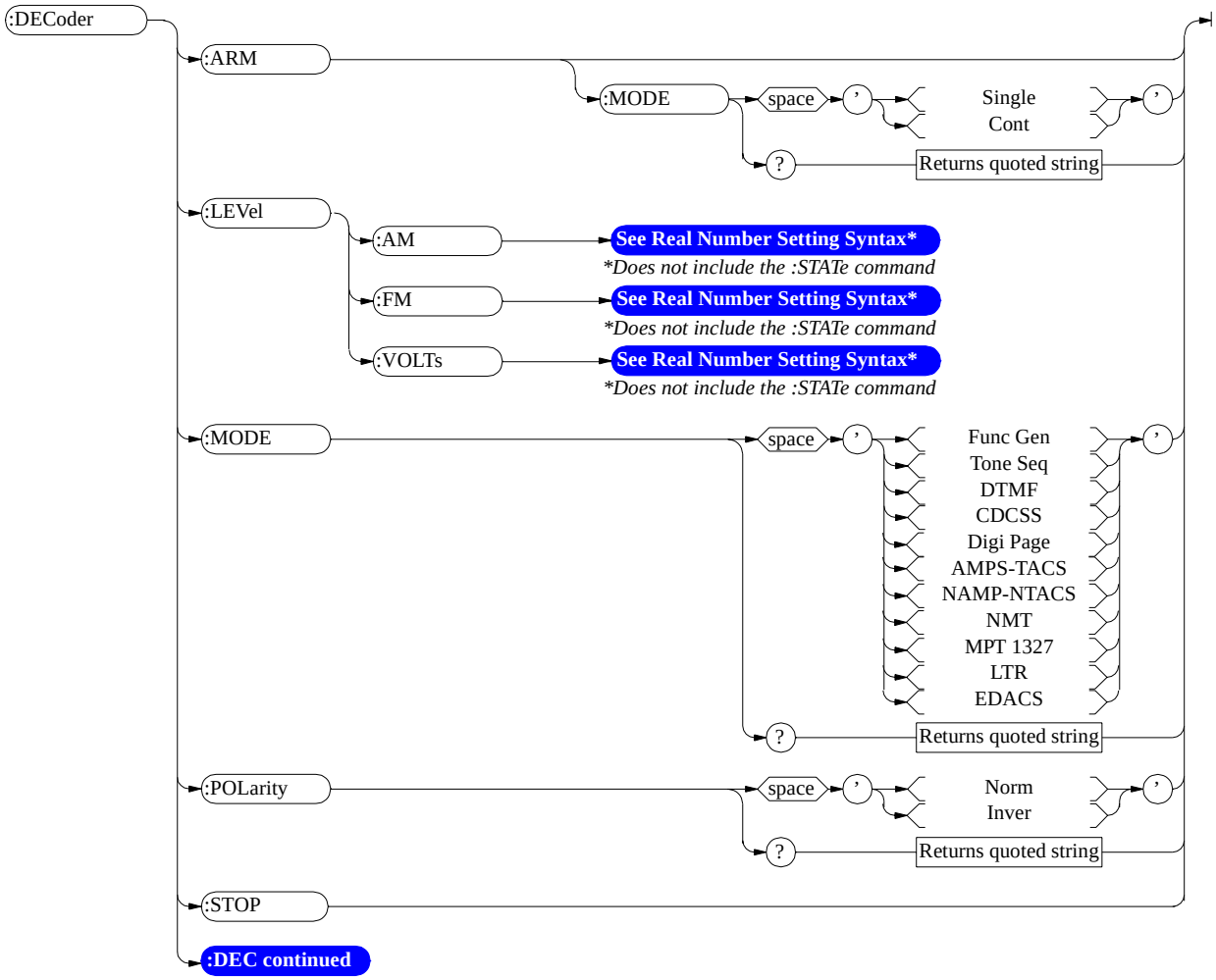

ManualsPlus.com

:NAMPs or :NTACs and :EDACs

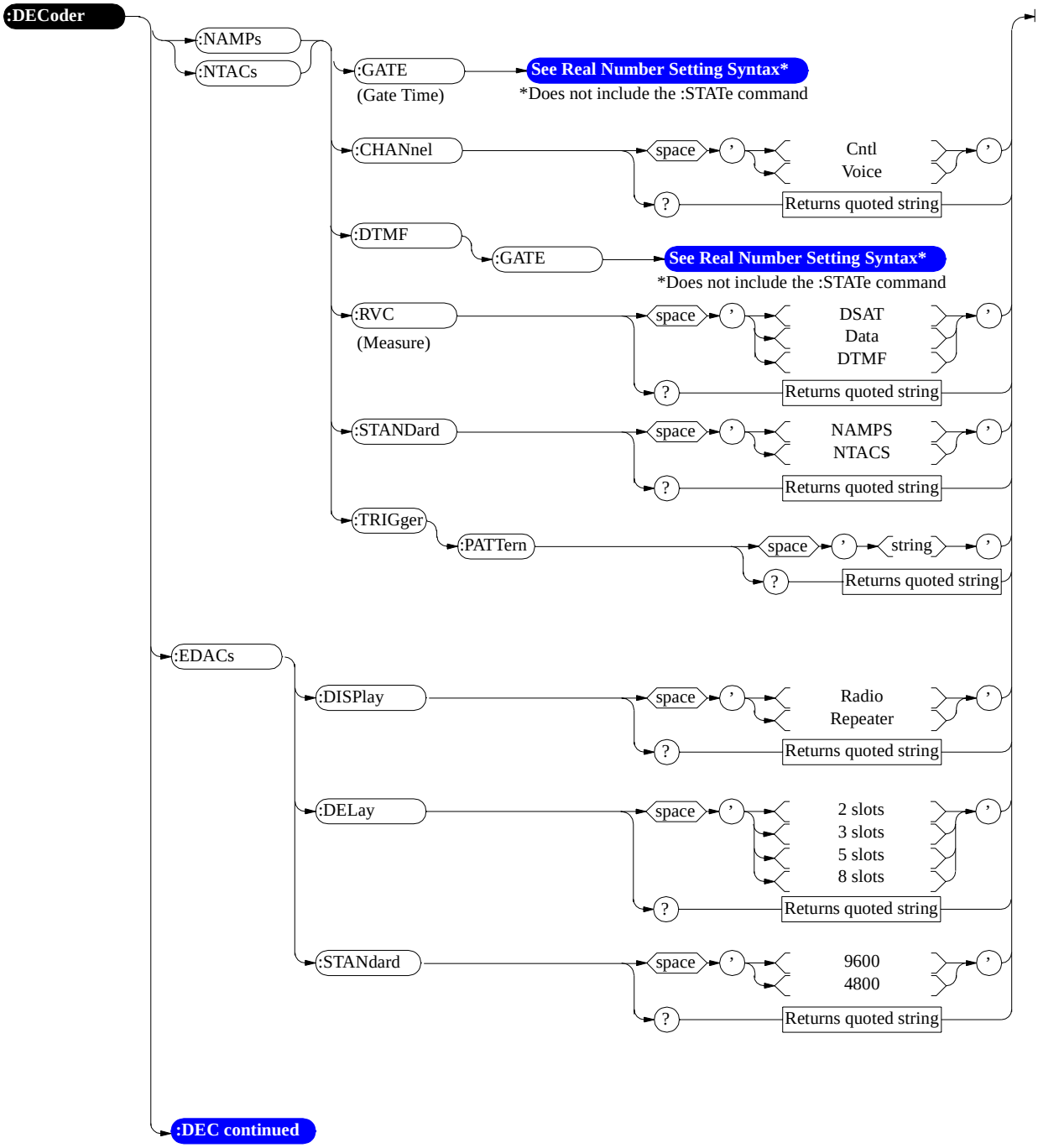

ManualsPlus.com

:AMPs or :TACs and :CDCSs, :DTMF, :FGEN, and :DPAG

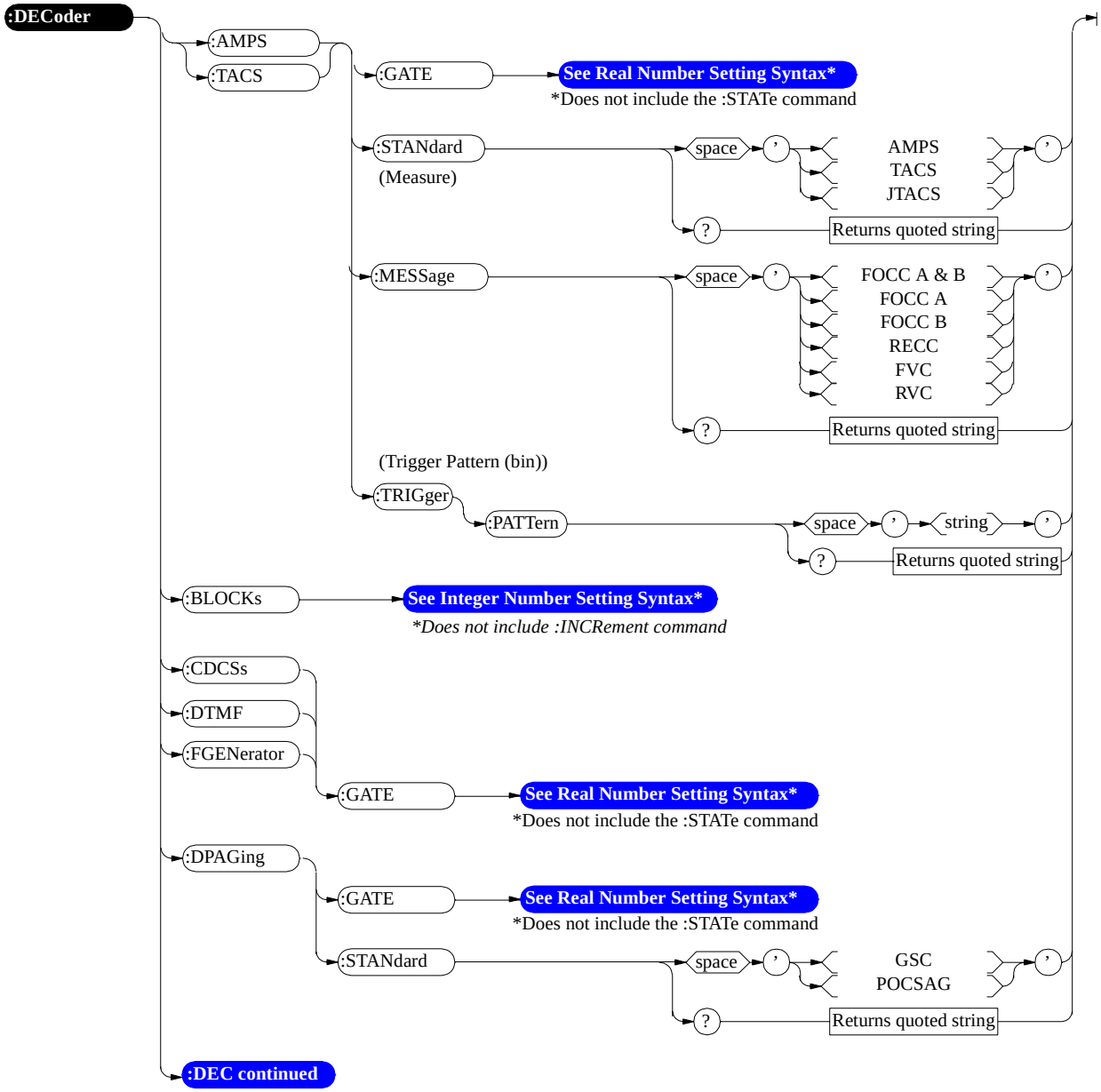

ManualsPlus.com

:TSEQuential, :MPT1327, and :LTR

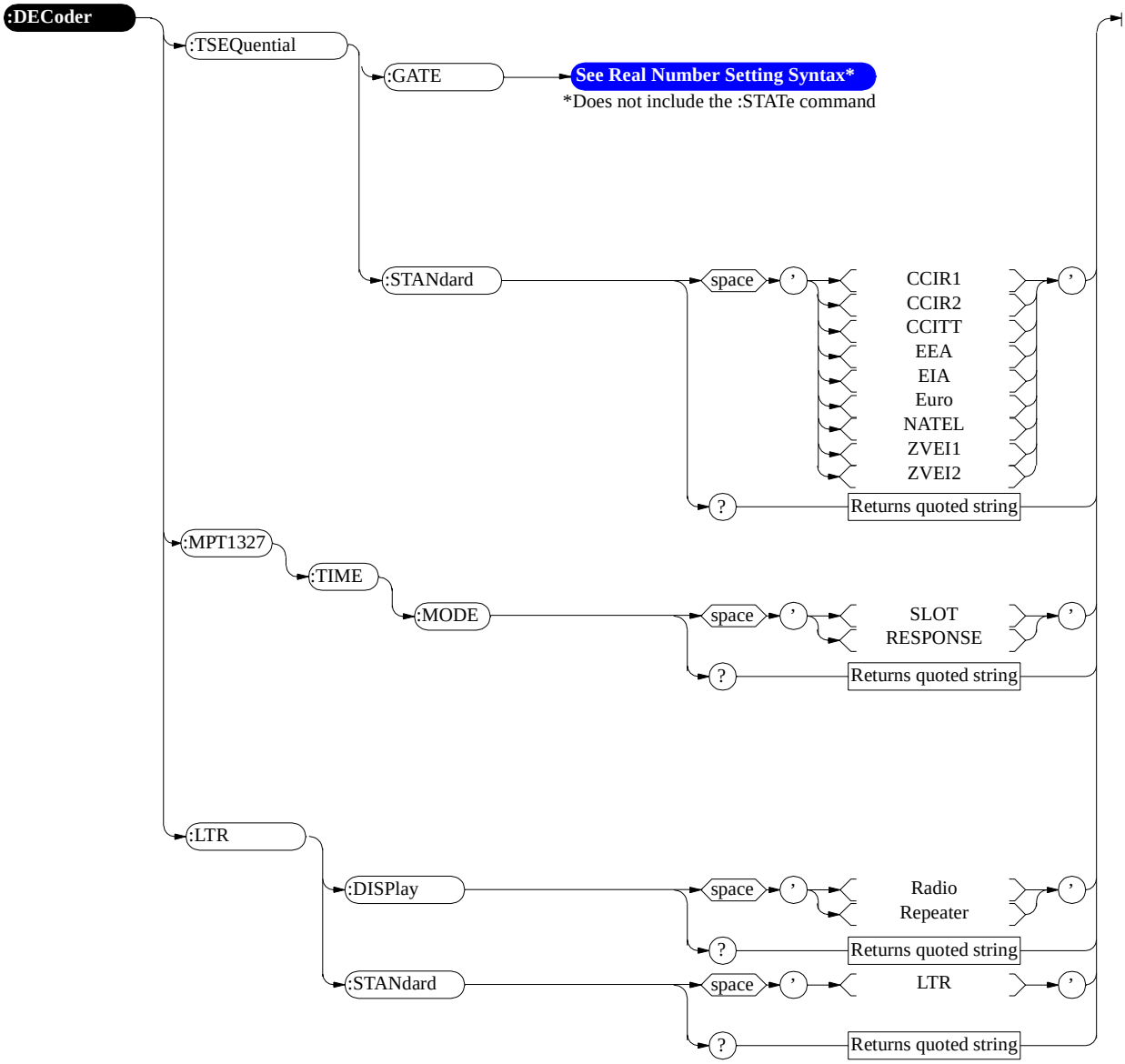

ManualsPlus.com

Display

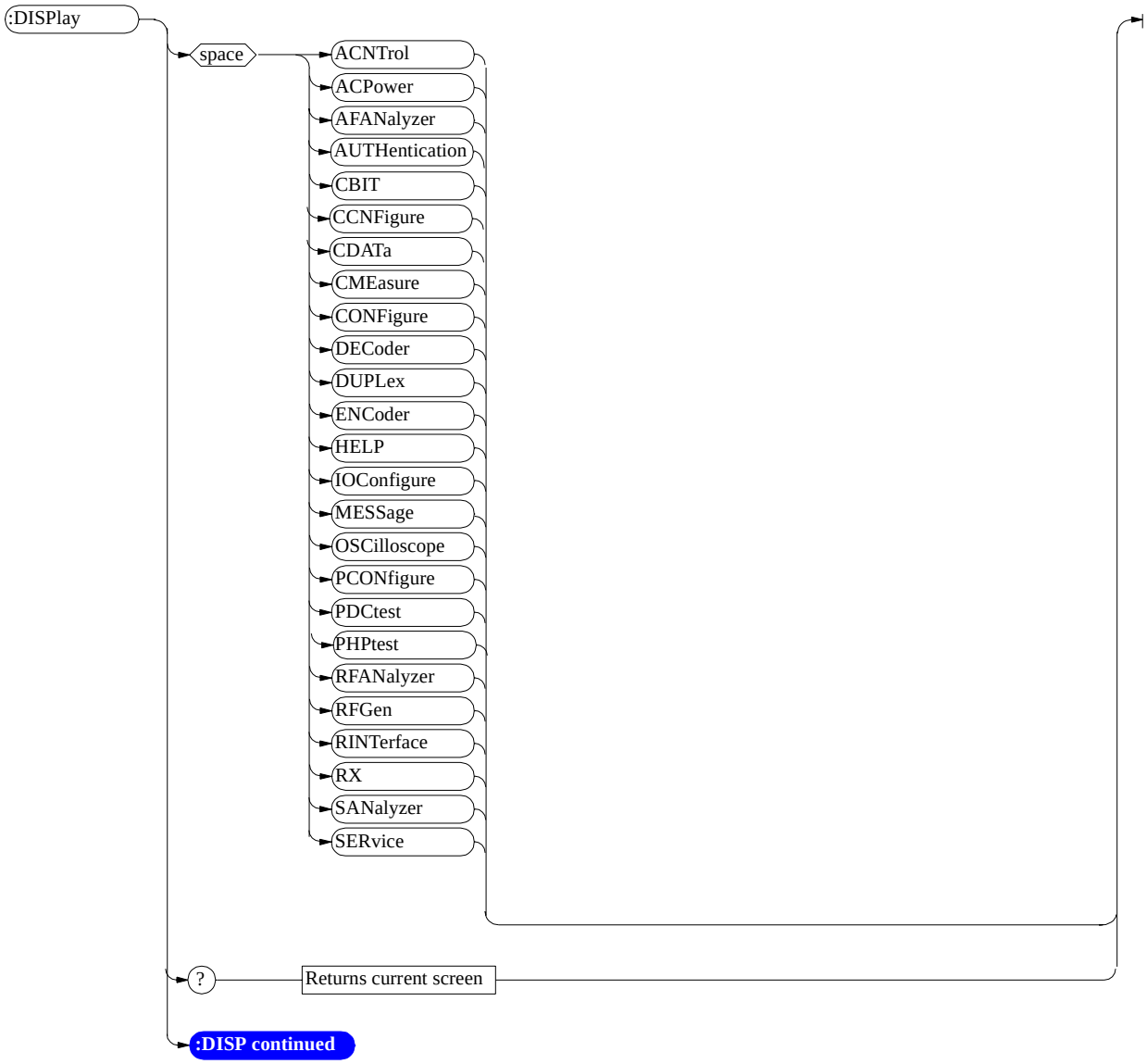

ManualsPlus.com

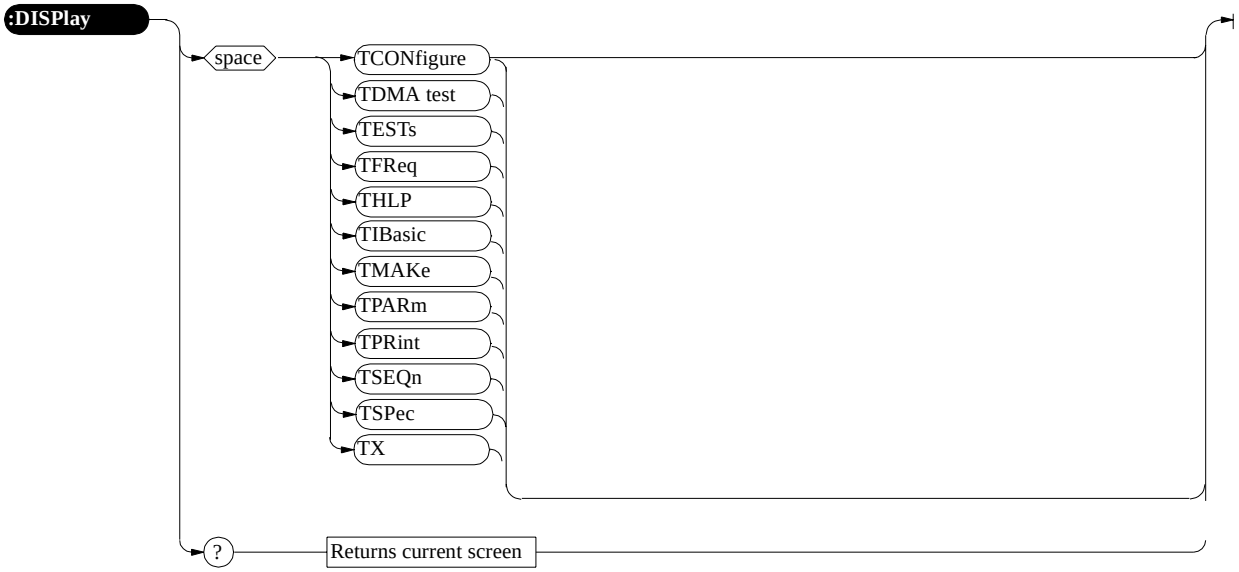

ManualsPlus.com

Measure

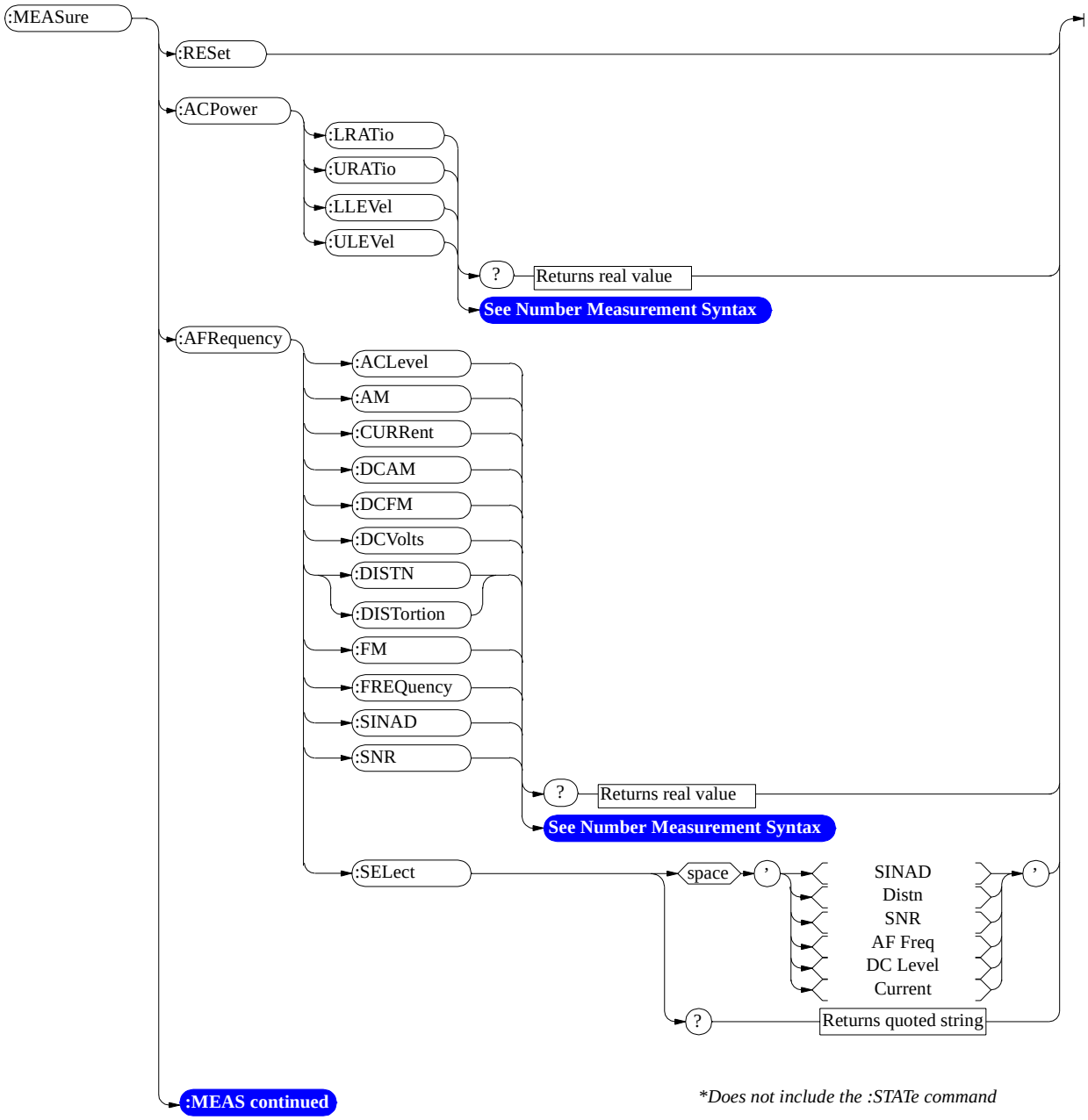

*Does not include the :STATe command

ManualsPlus.com

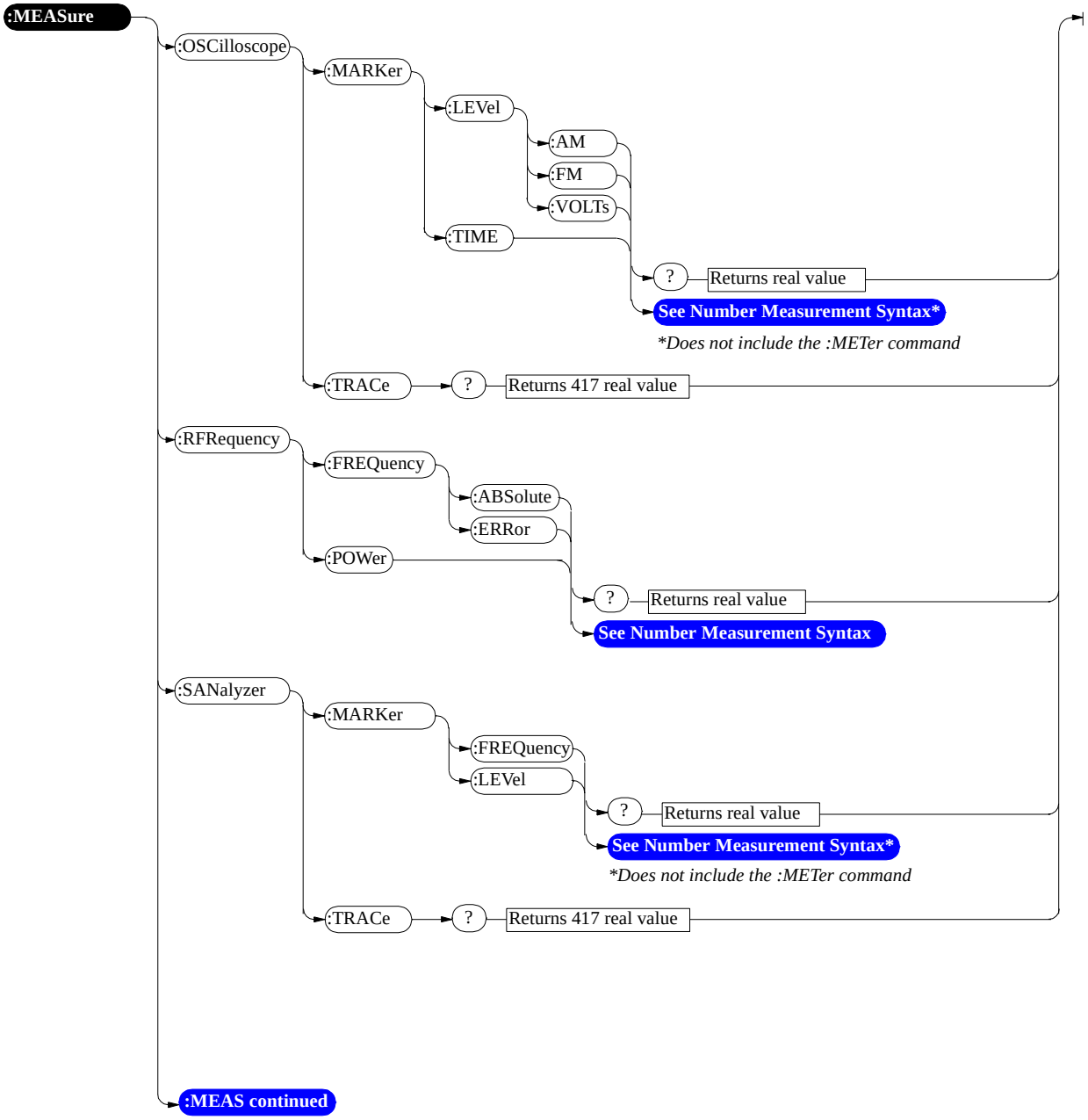

ManualsPlus.com

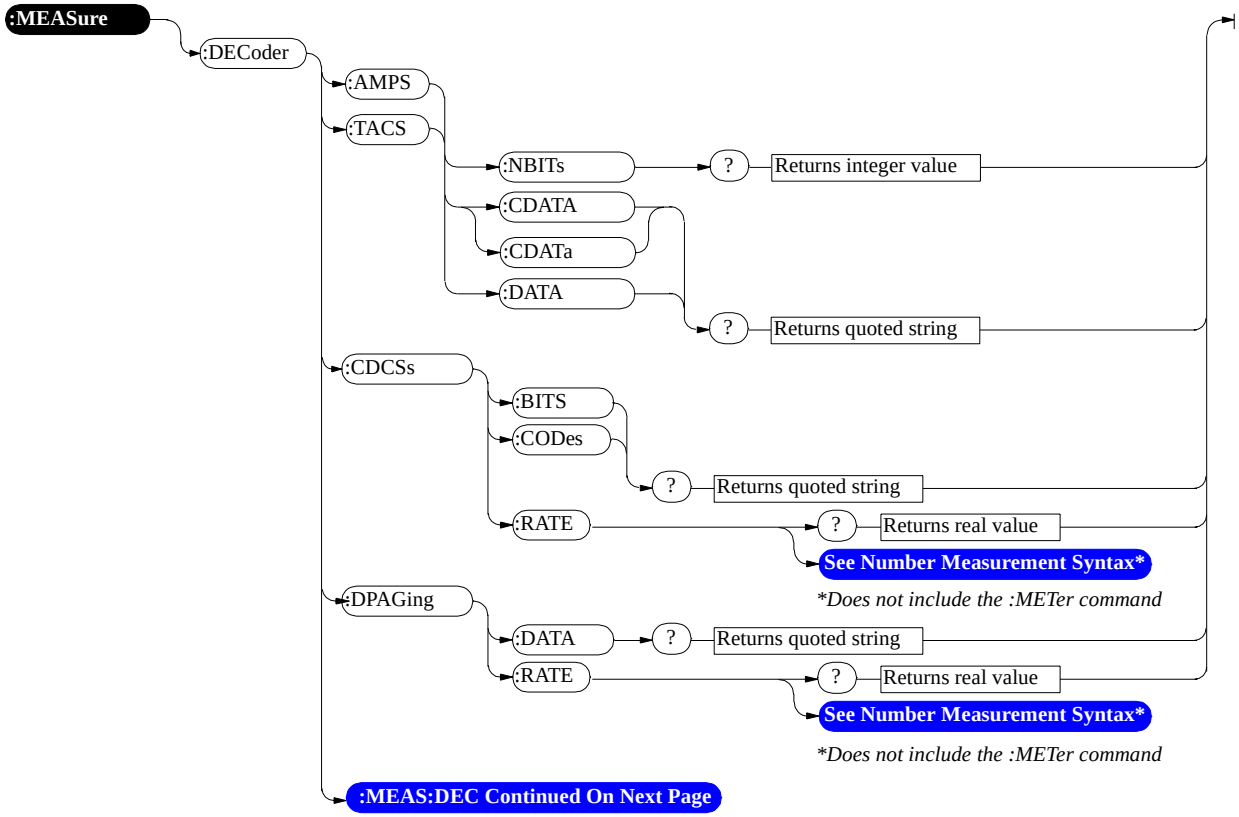

ManualsPlus.com

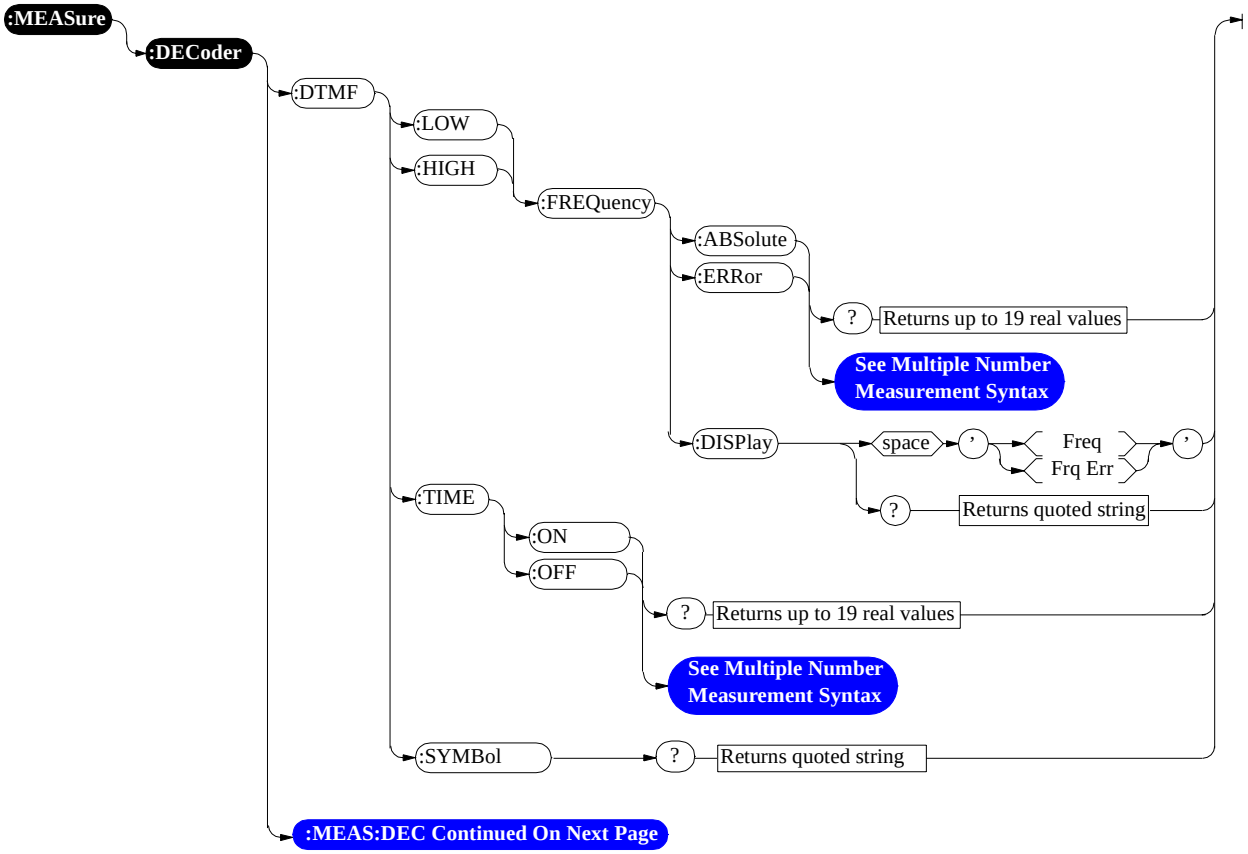

ManualsPlus.com

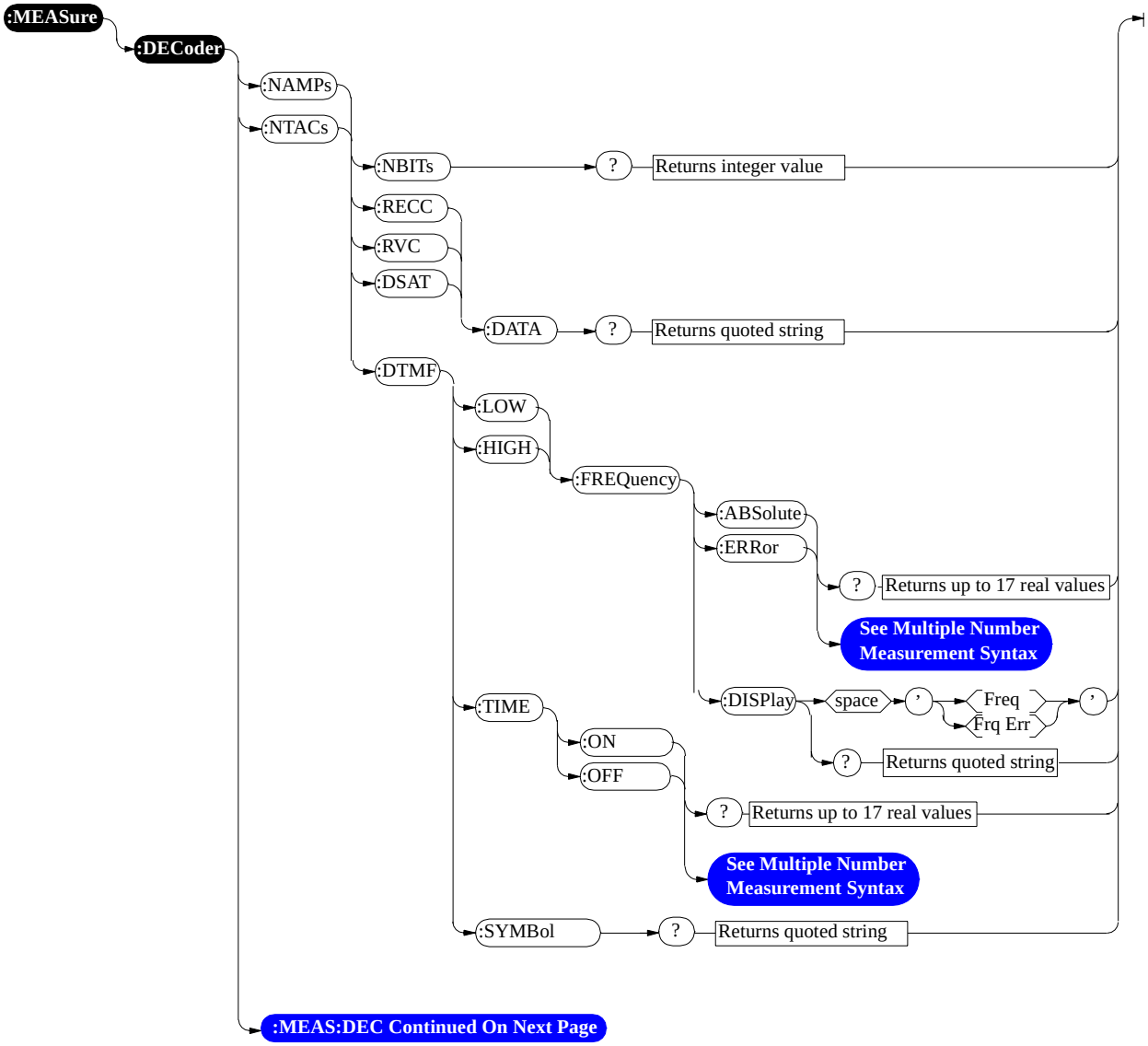

ManualsPlus.com

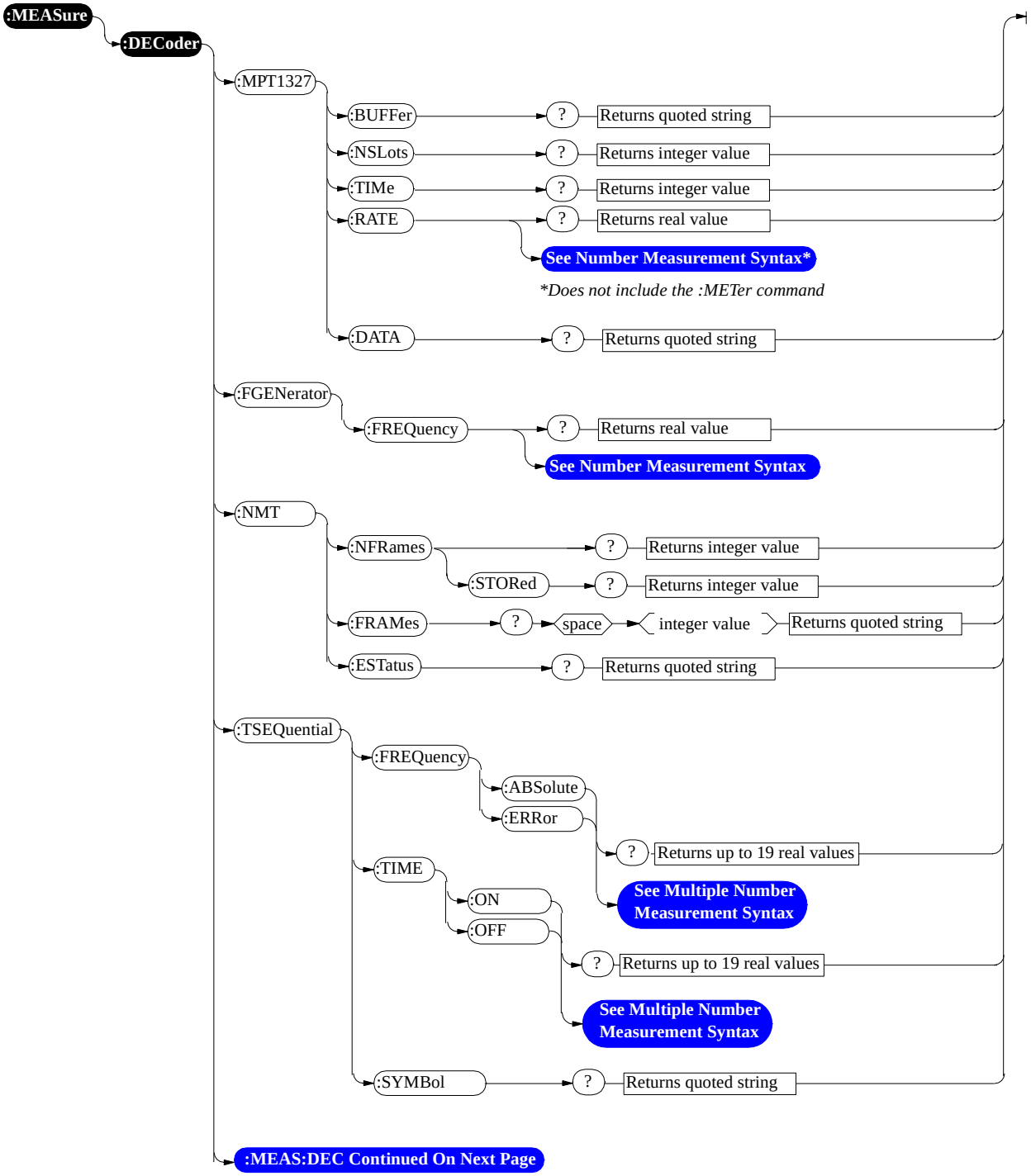

ManualsPlus.com

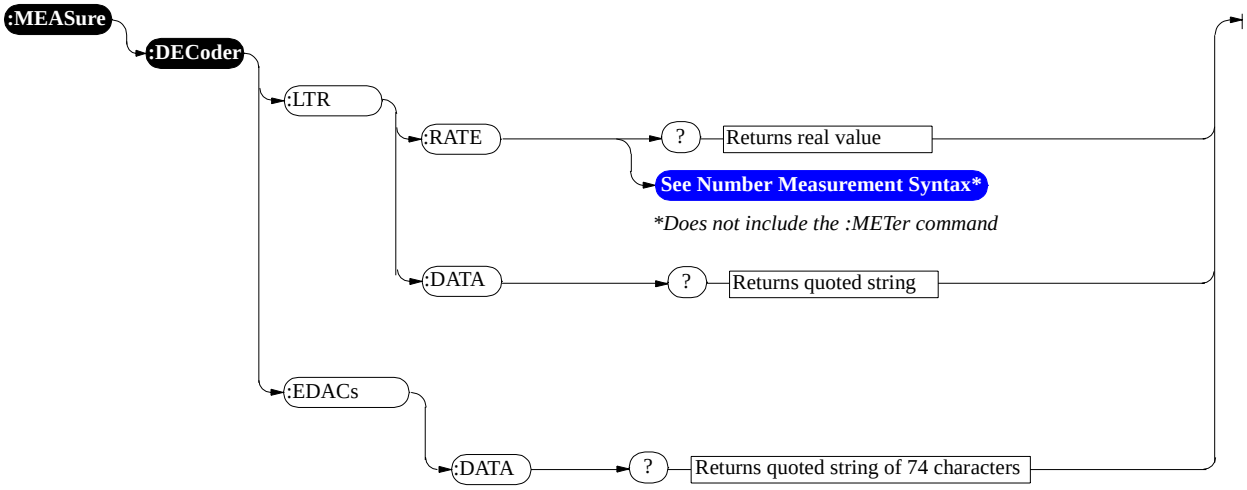

ManualsPlus.com

Oscilloscope

For Oscilloscope measurements see the MEASure command diagram.

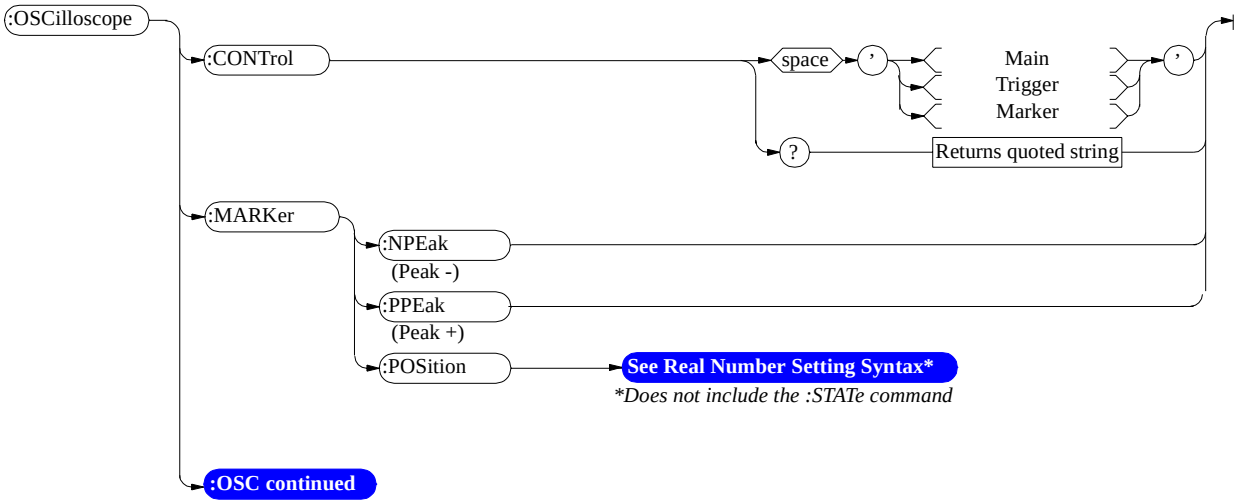

ManualsPlus.com

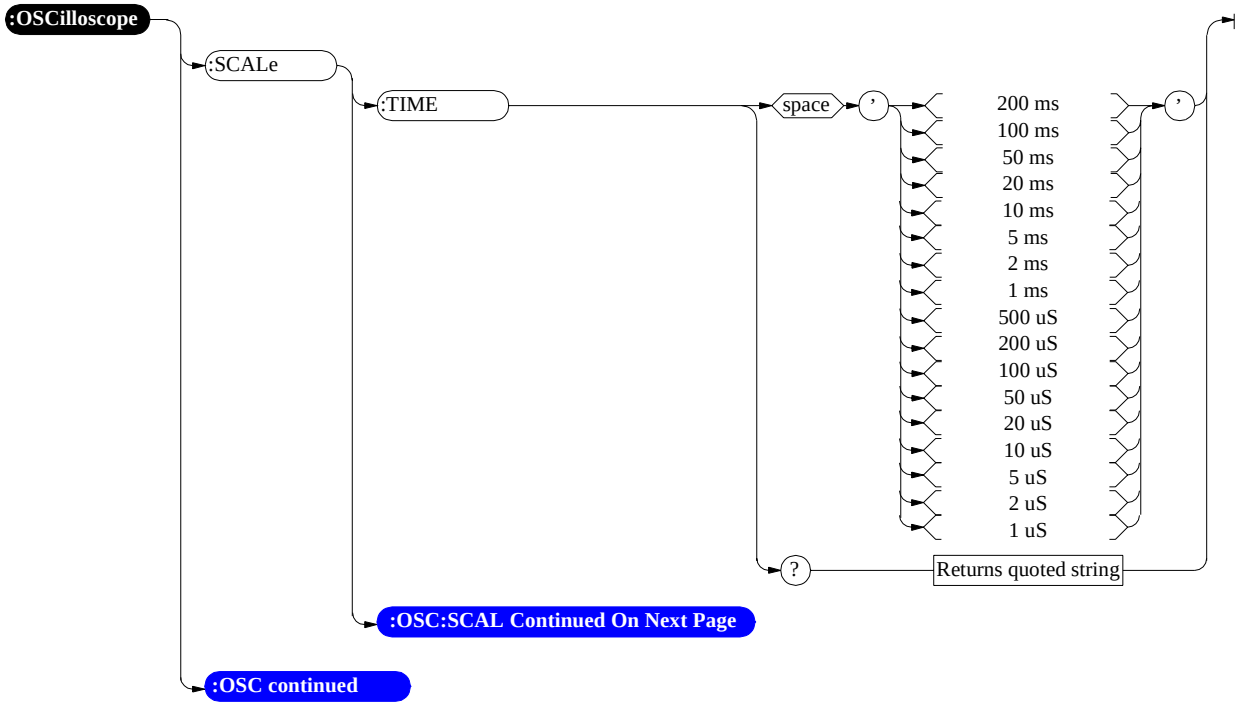

ManualsPlus.com

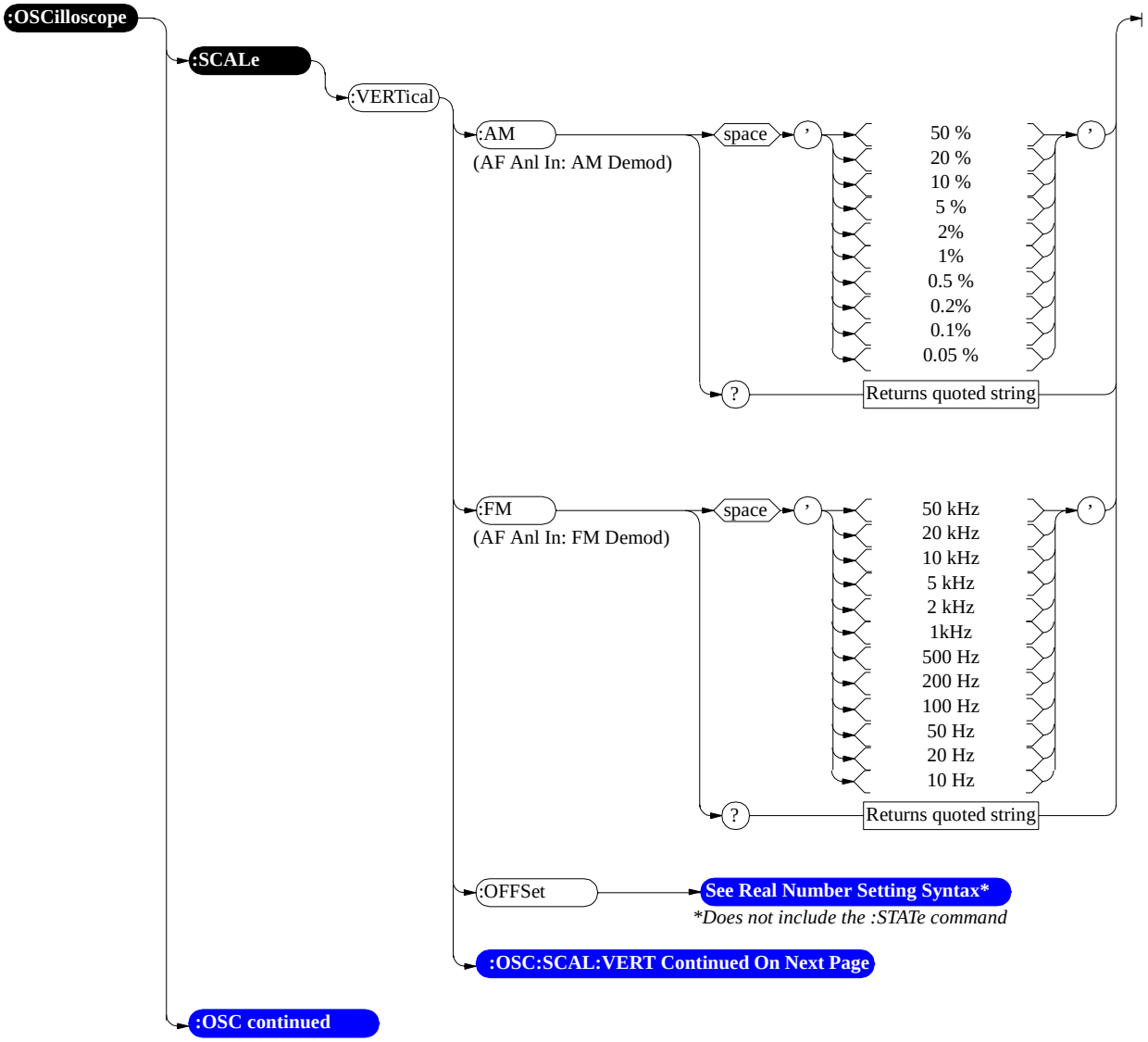

ManualsPlus.com

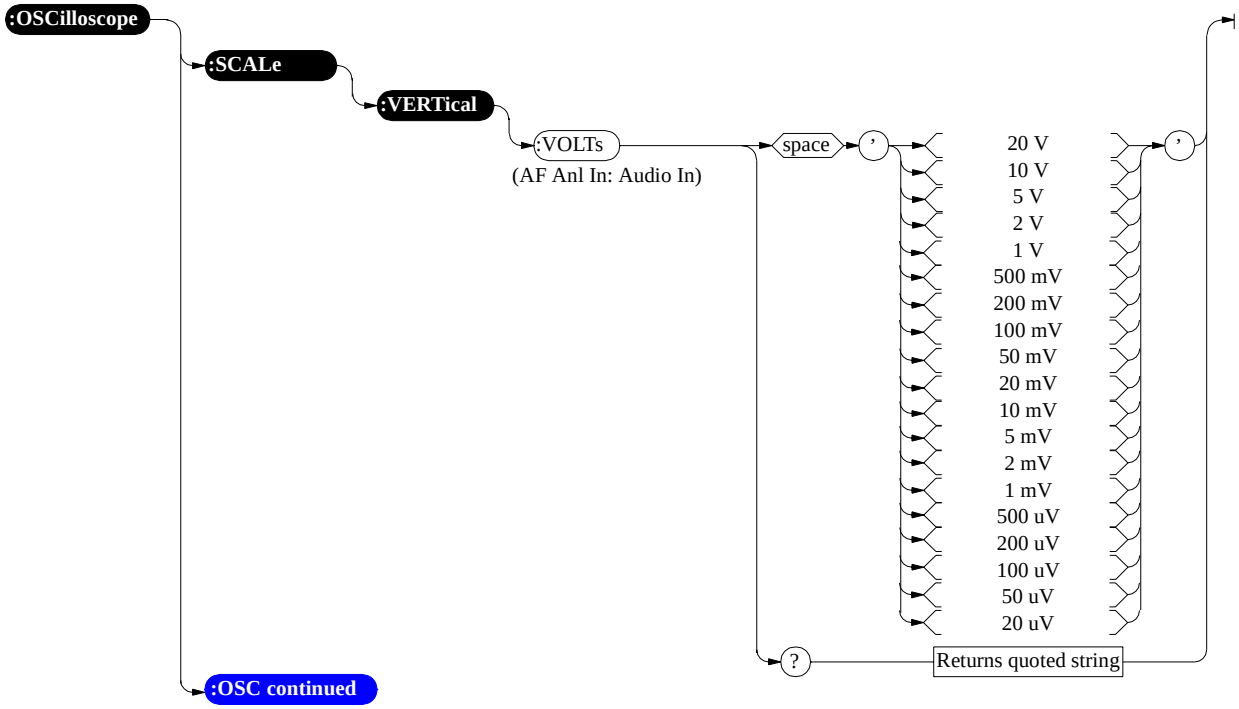

ManualsPlus.com

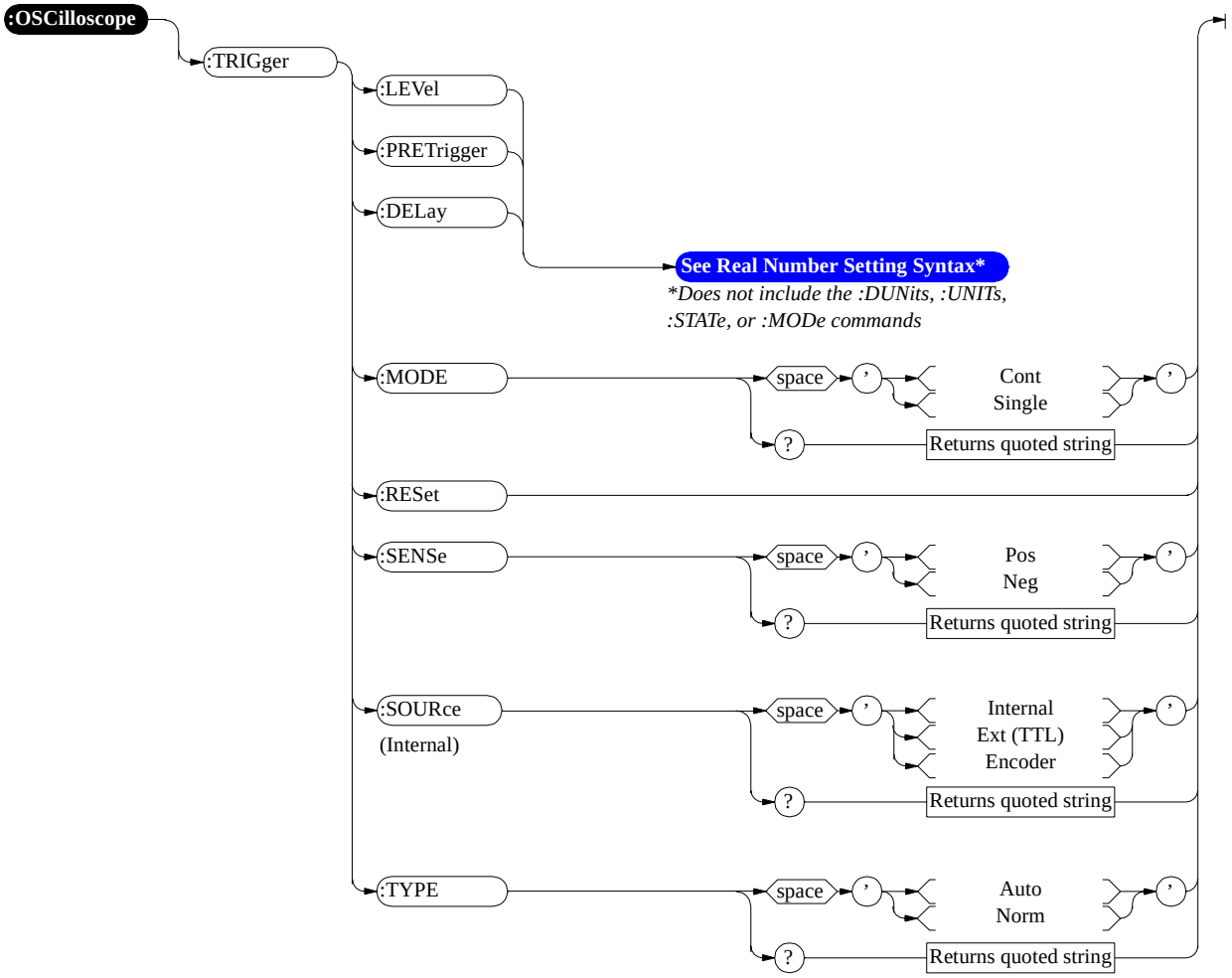

ManualsPlus.com

Program

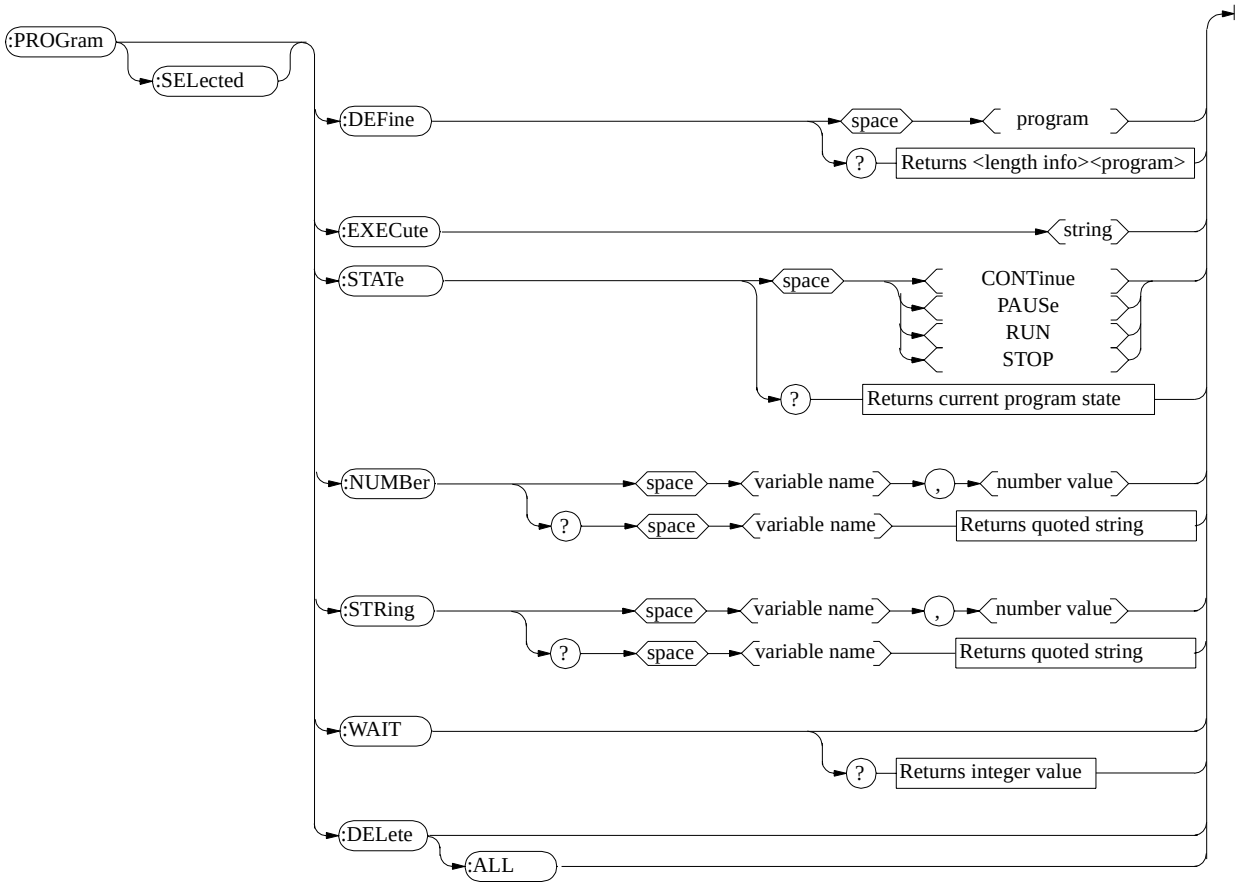

ManualsPlus.com

Save/Recall Registers

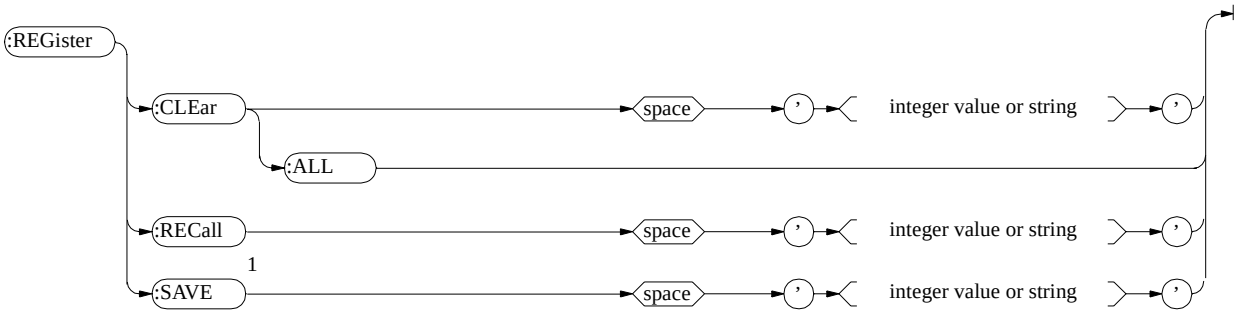

NOTE: [1] The Test Set does not check for a duplicate file name when the SAVE command is issued; therefore, any existing register of the same name will be overwrittren without warning.

ManualsPlus.com

RF Analyzer

For RF Analyzer measurements see the MEASure command diagram.

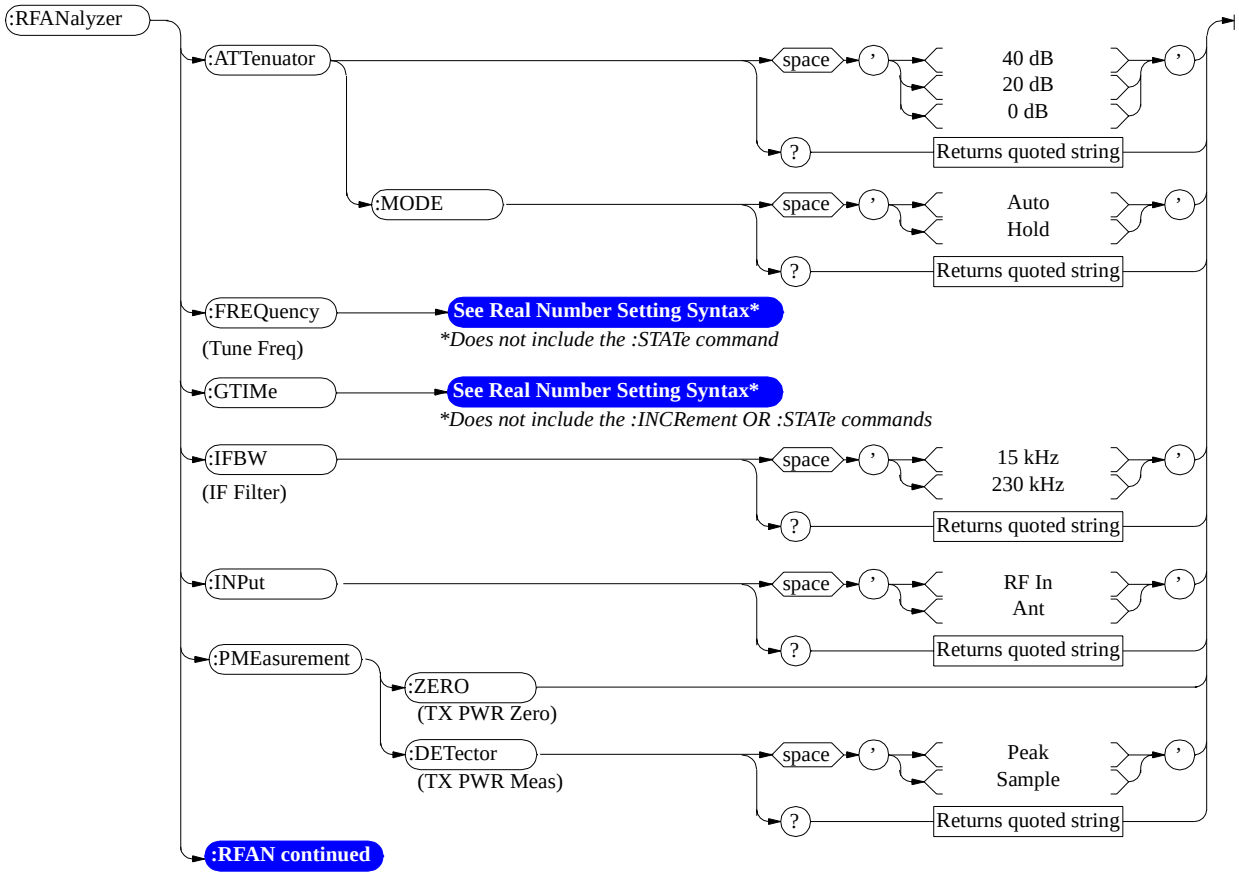

ManualsPlus.com

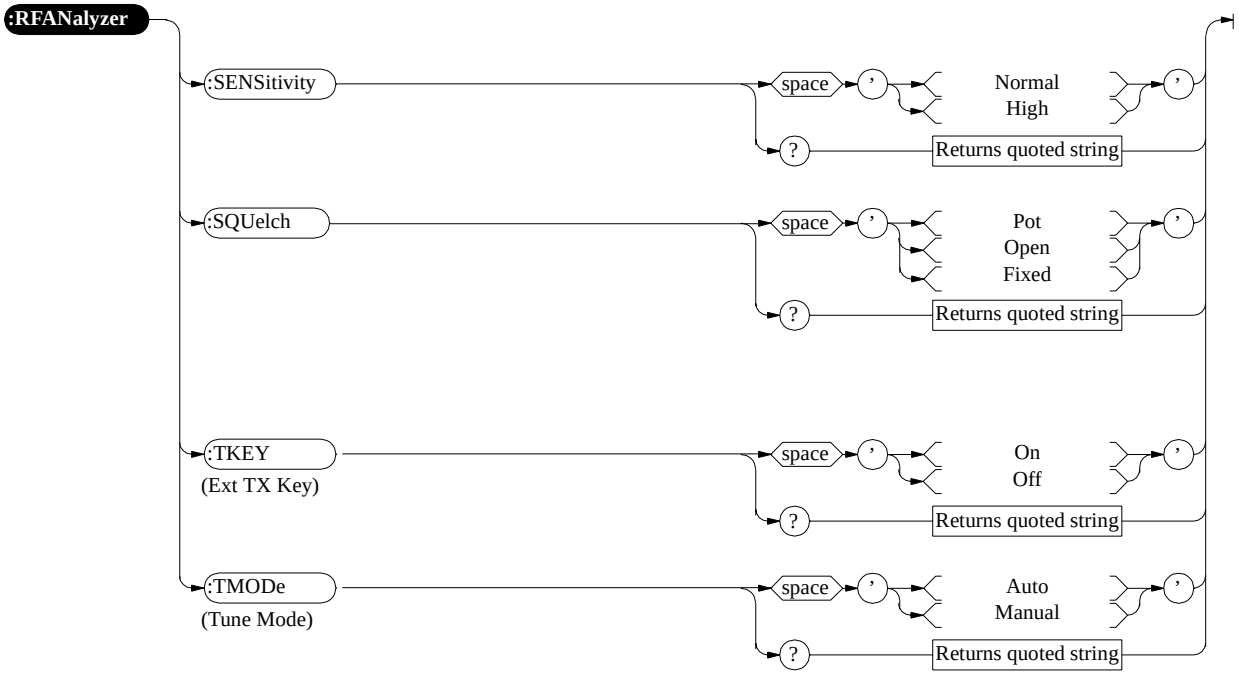

ManualsPlus.com

RF Generator

For RF Generator measurements see the MEASure command diagram.

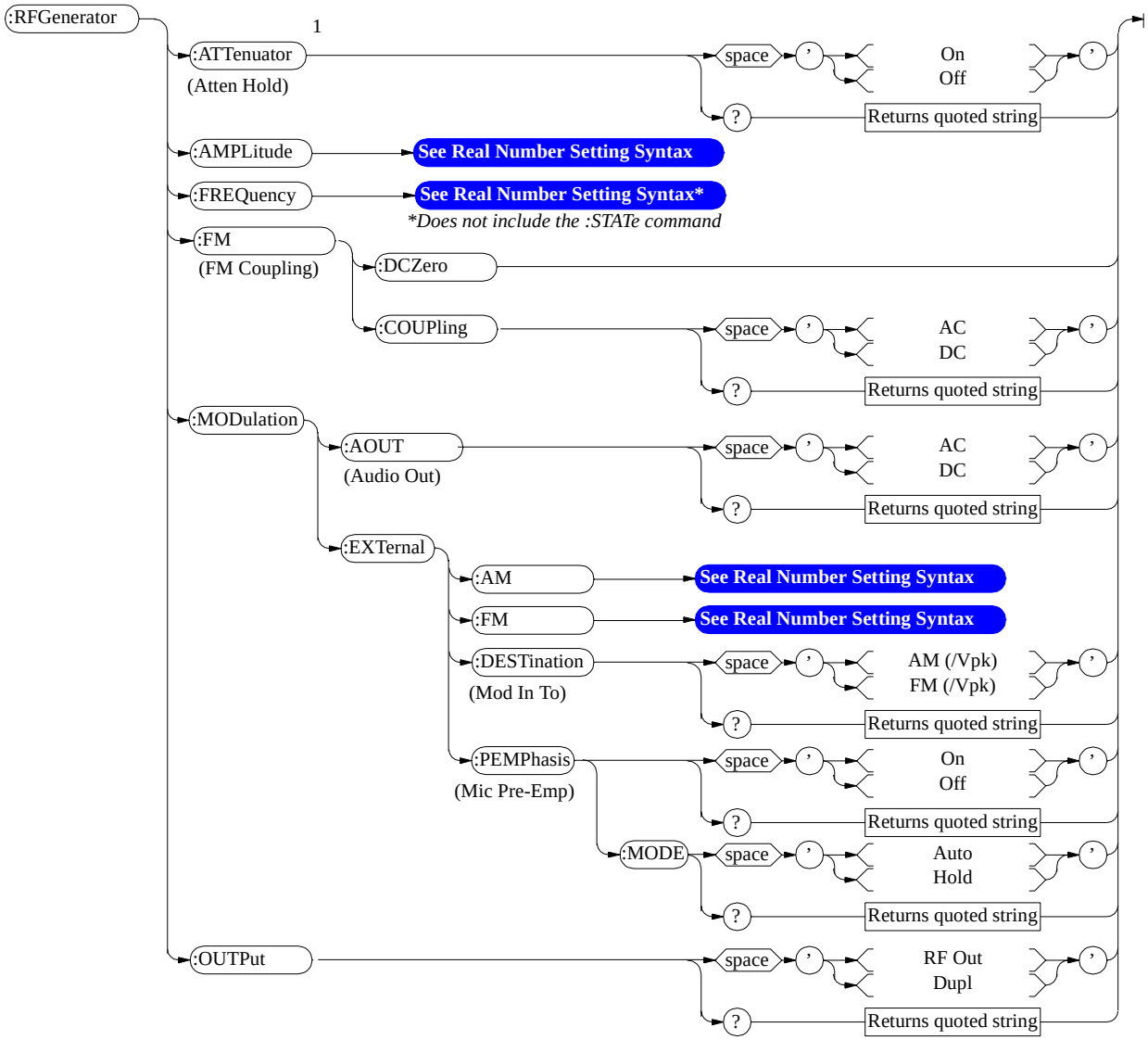

[1] RF power must not be applied while zeroing. Set the **RF GENERATOR** screen **Amplitude** field to off to prevent internal cross-coupling into the power detector while zeroing.

ManualsPlus.com

Radio Interface

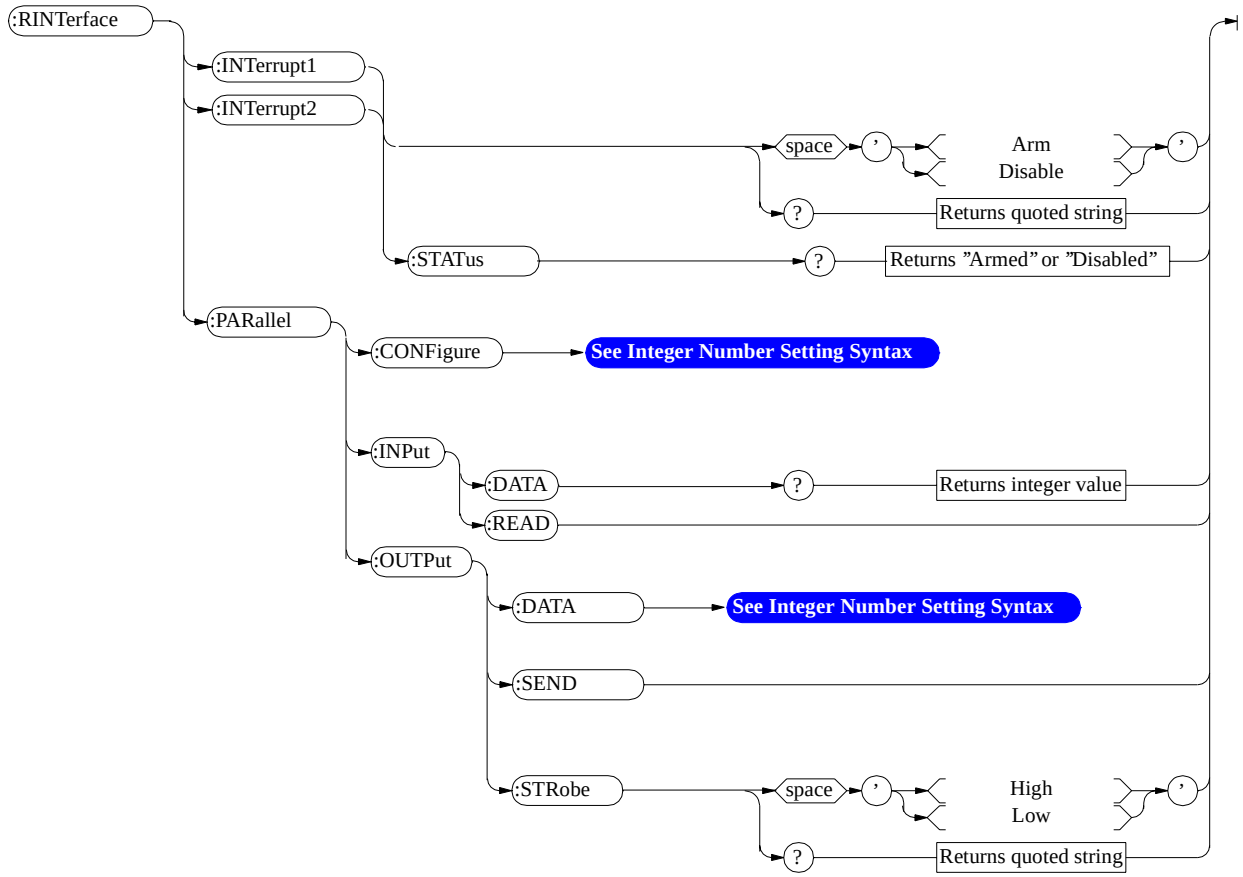

ManualsPlus.com

Spectrum Analyzer

For Spectrum Analyzer measurements see the MEASure command diagram.

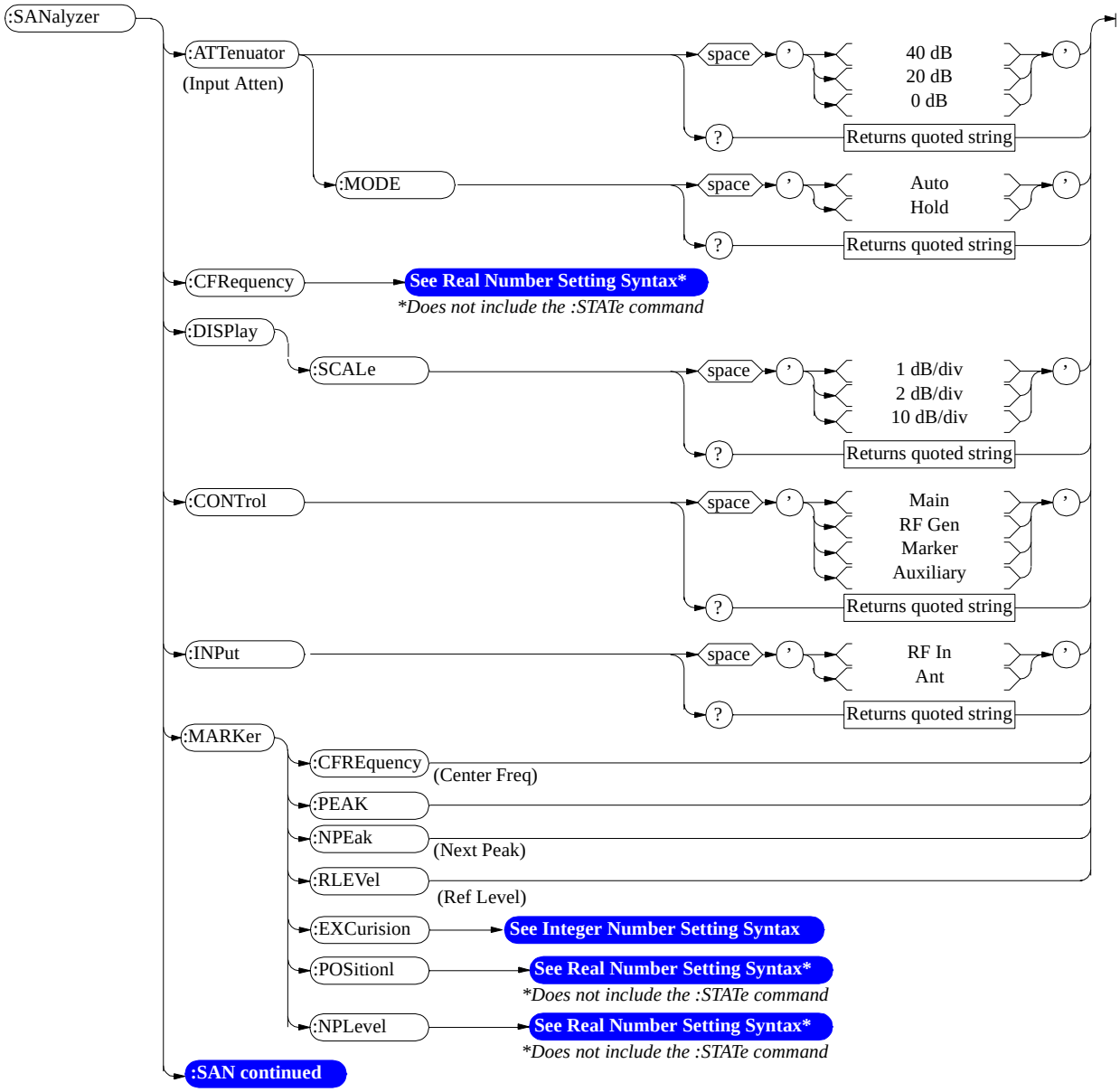

ManualsPlus.com

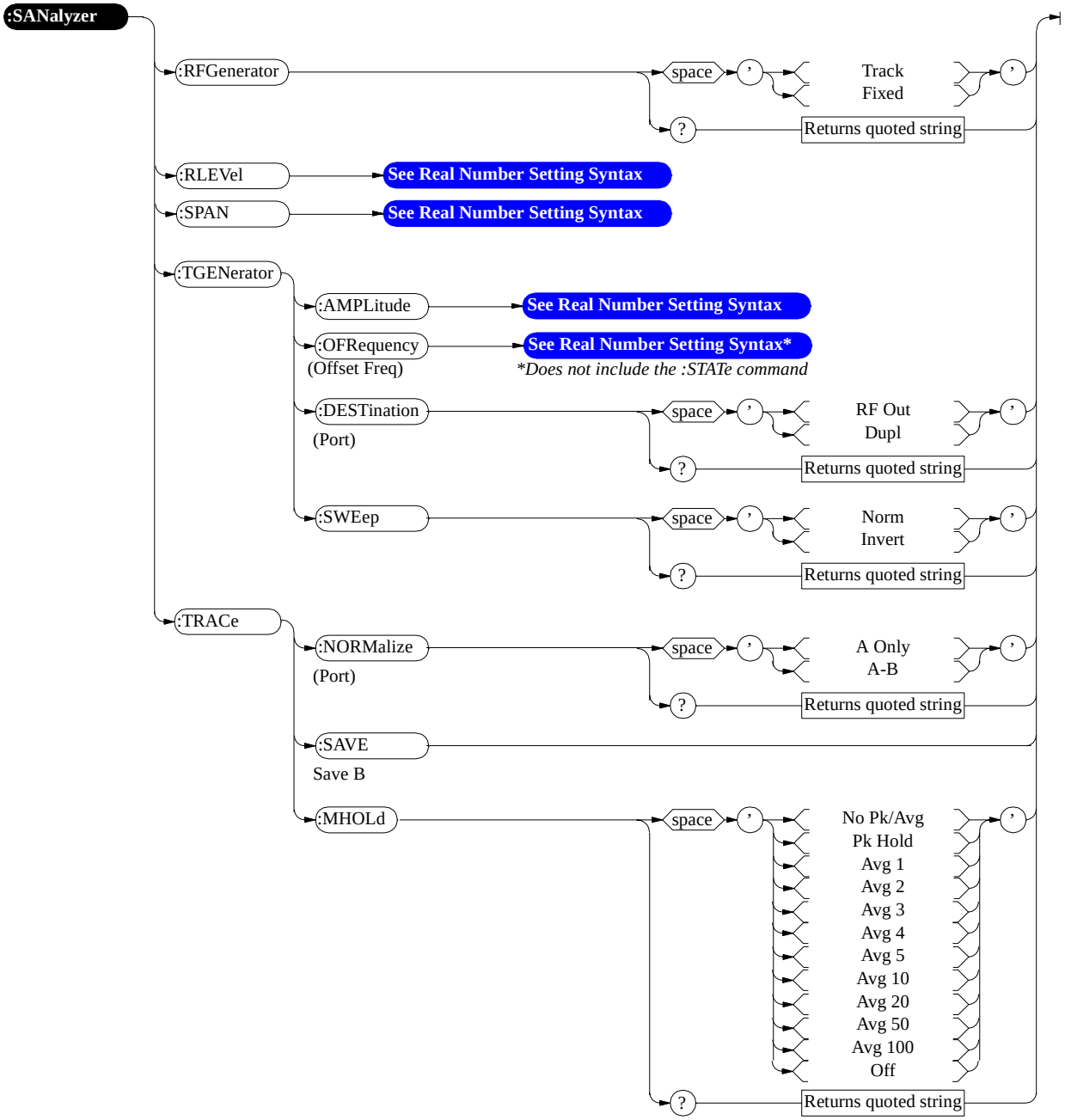

ManualsPlus.com

GPIB Only Commands

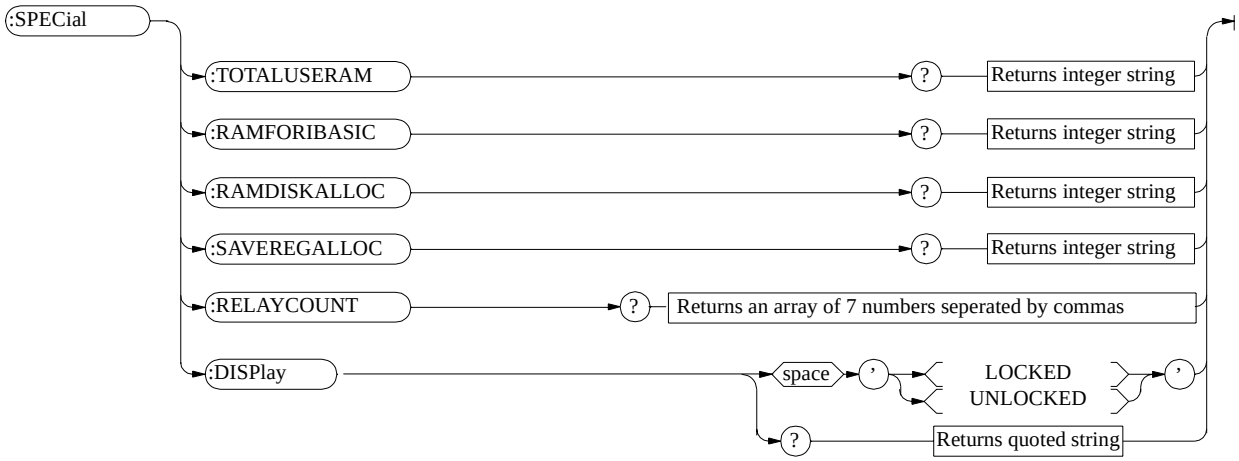

ManualsPlus.com

Status

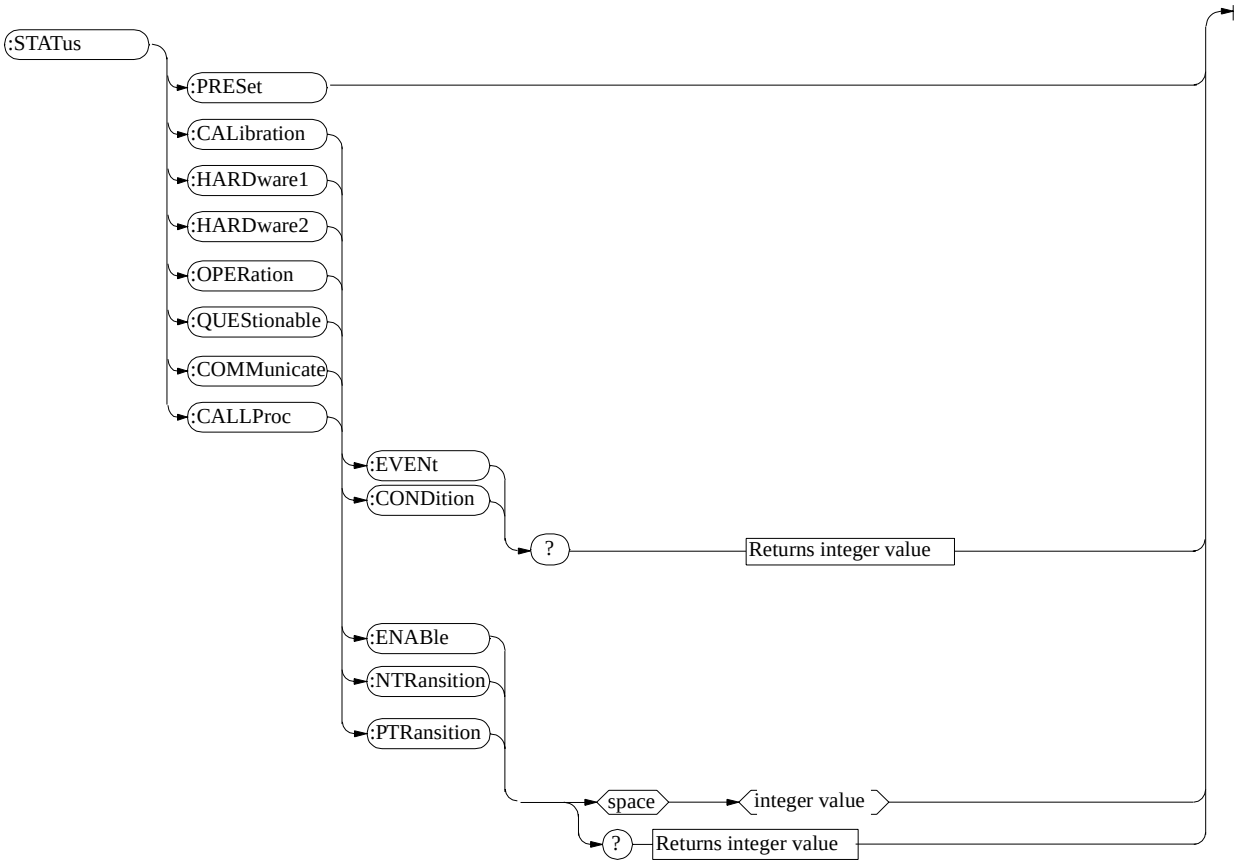

ManualsPlus.com

System

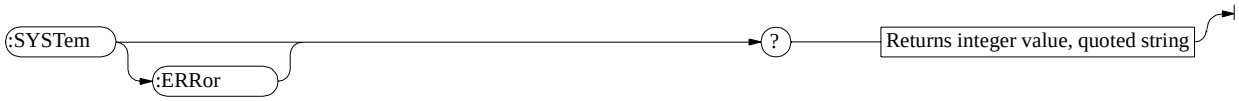

ManualsPlus.com

Tests

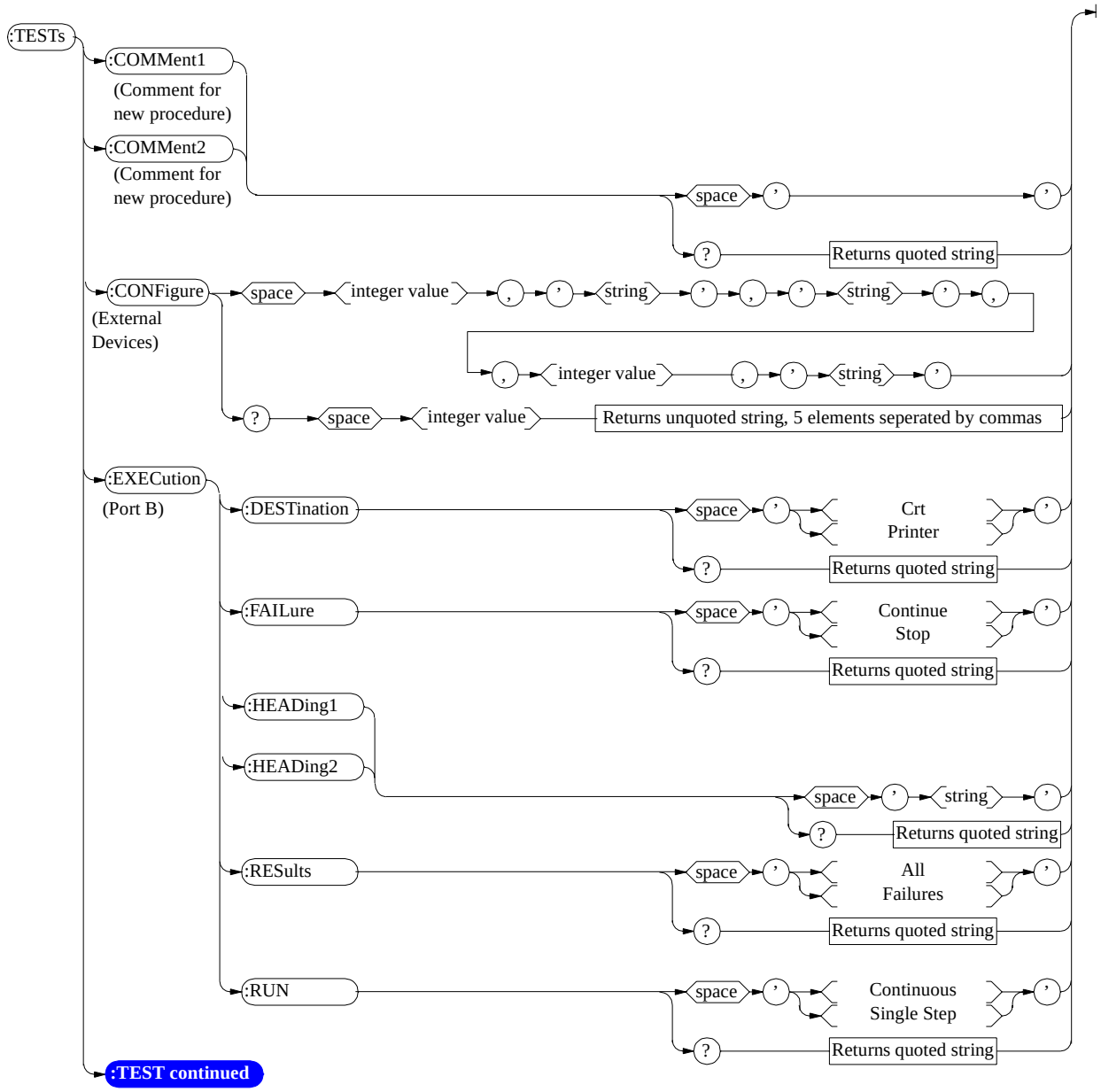

ManualsPlus.com

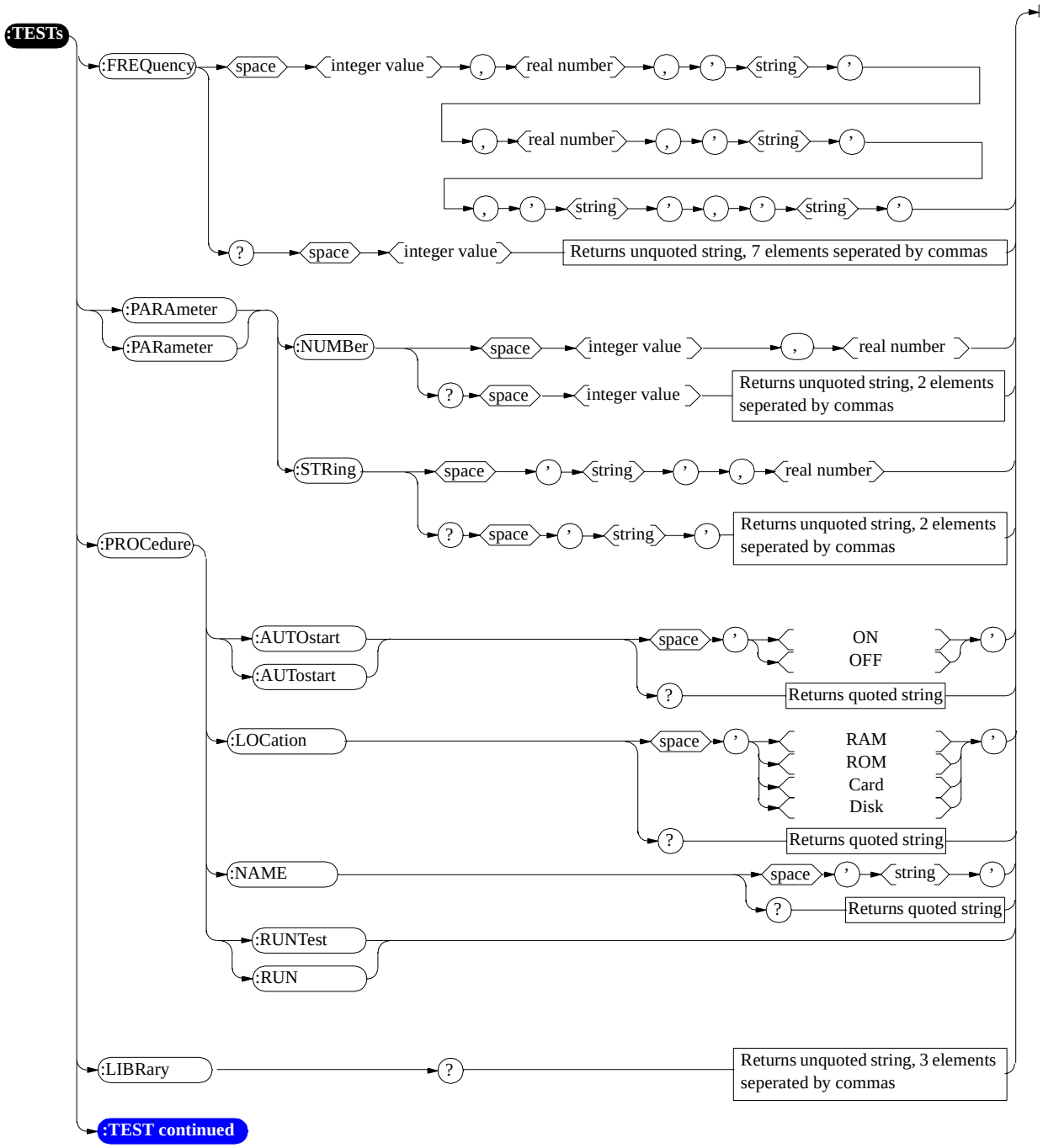

ManualsPlus.com

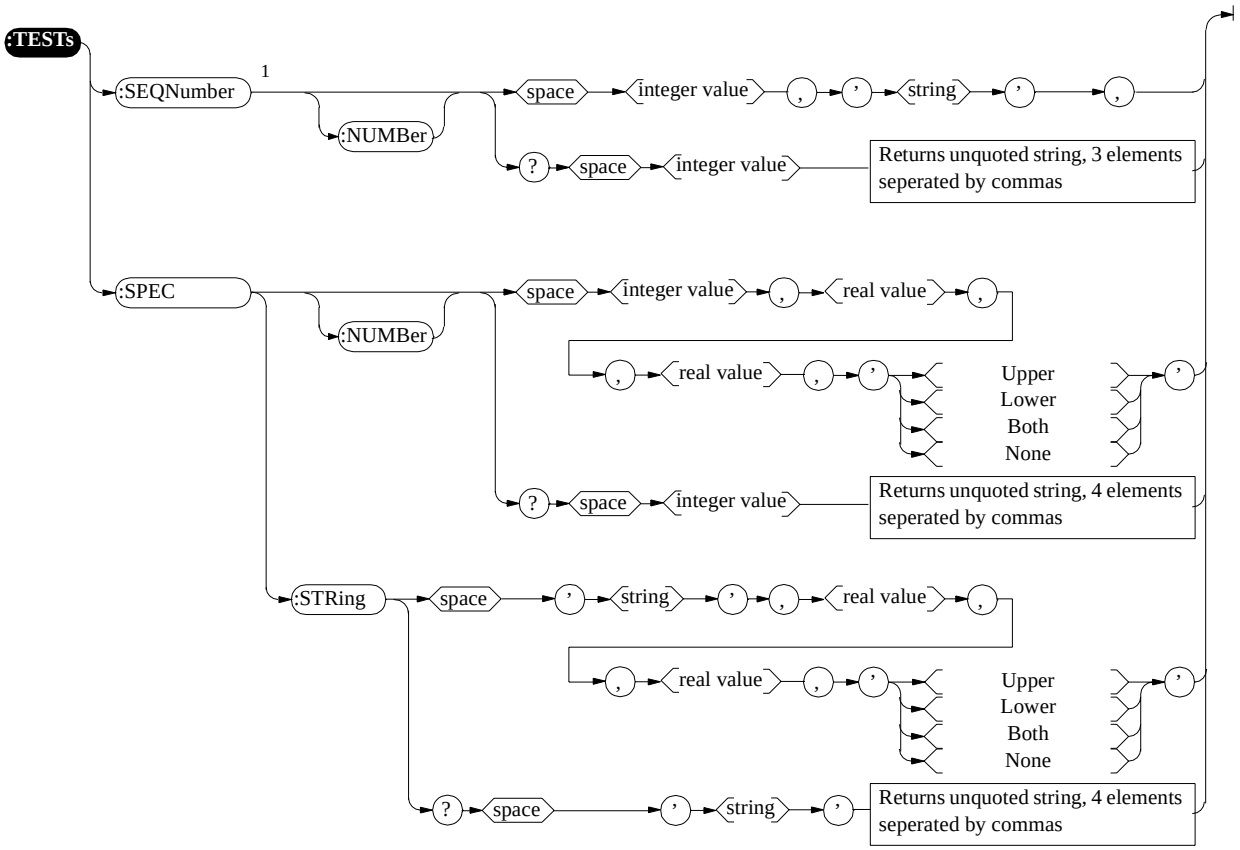

[1] Example: "TEST:SEQN:NUMB 3 '1,Y,3,N,7,Y'"

This command sets the number and the order of tests (steps):

for test 1, tests all channels (Y=yes All Chans?),
for test 3 does not testall channels (N=no All Chans?),
and for test 7, tests all channels (Y=yes All Chans?).

ManualsPlus.com

Trigger

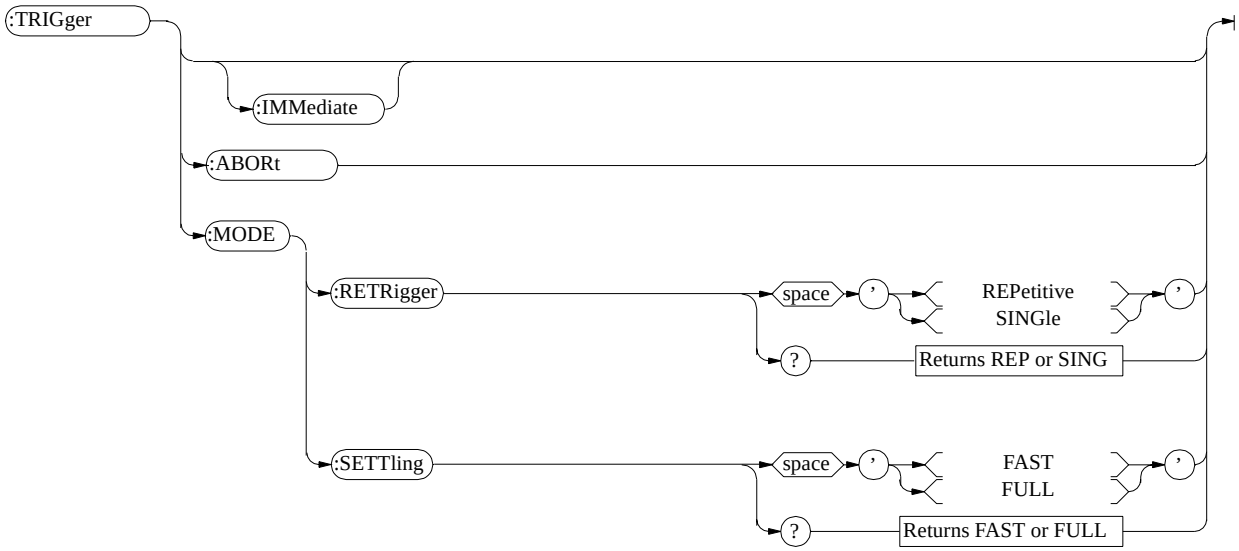

ManualsPlus.com

Integer Number Setting Syntax

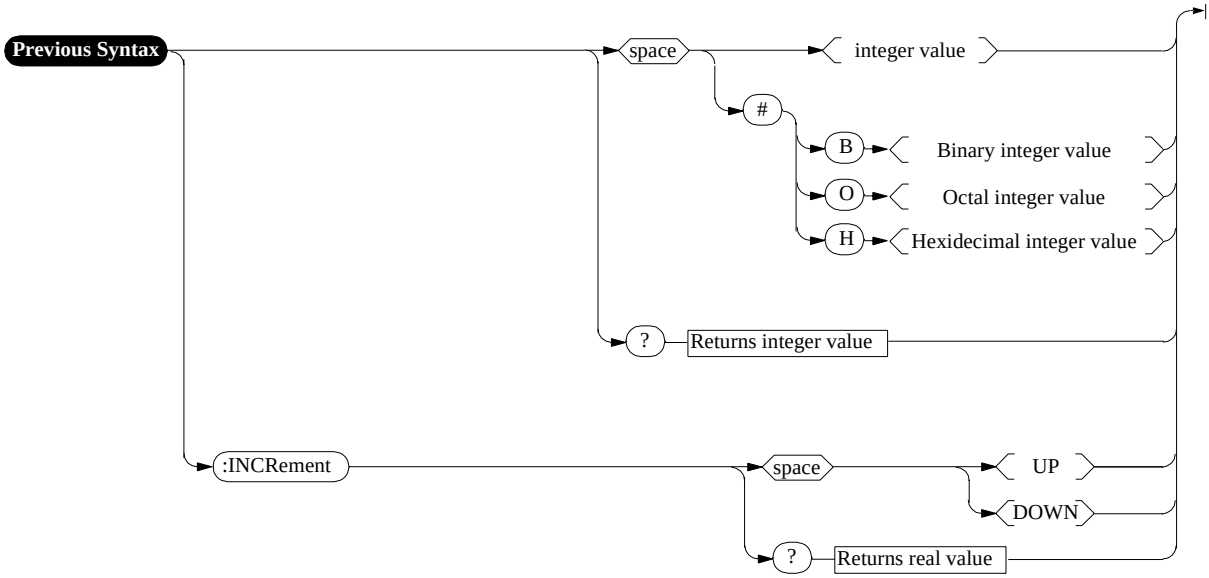

ManualsPlus.com

Real Number Setting Syntax

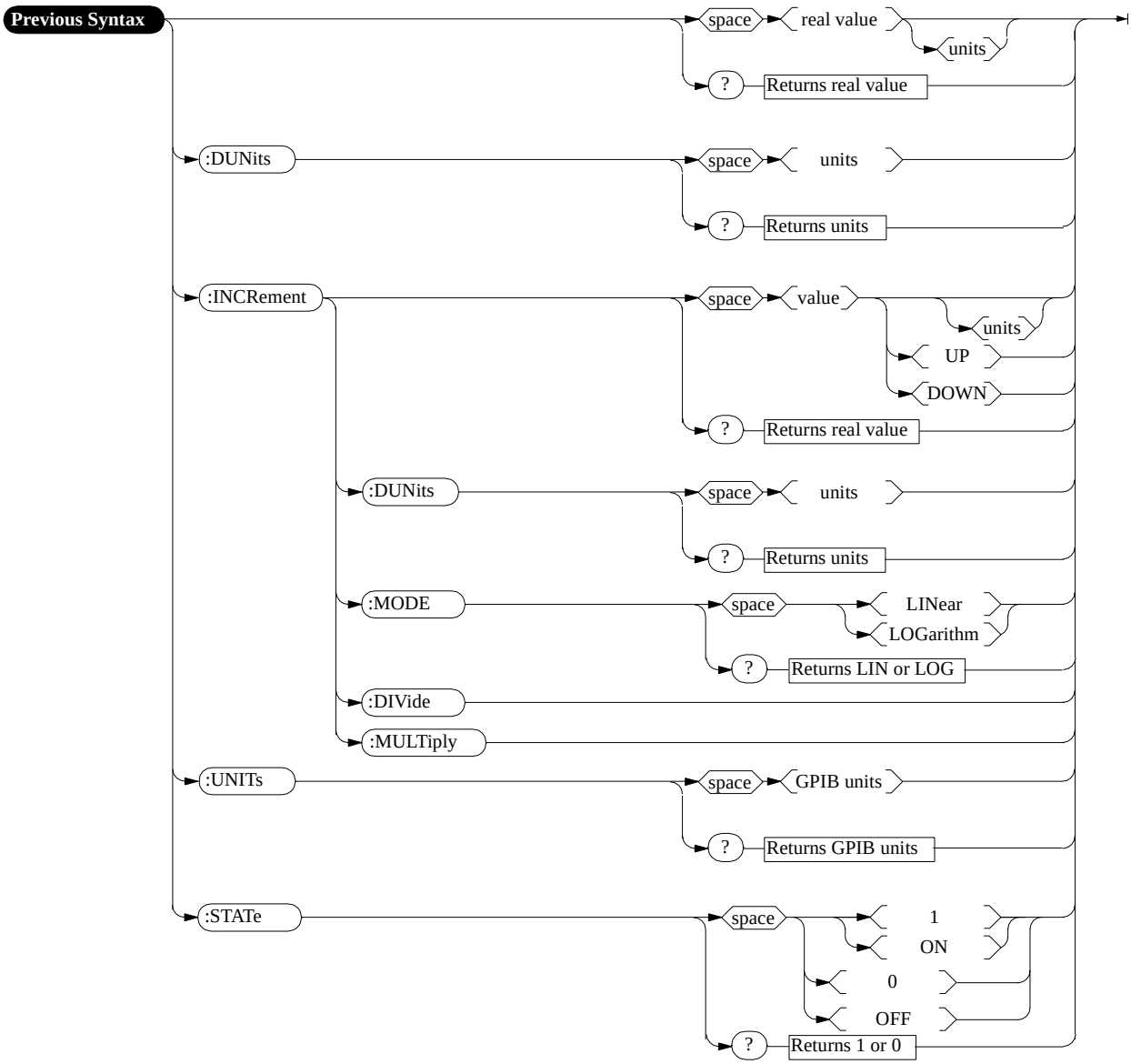

ManualsPlus.com

Multiple Real Number Setting Syntax

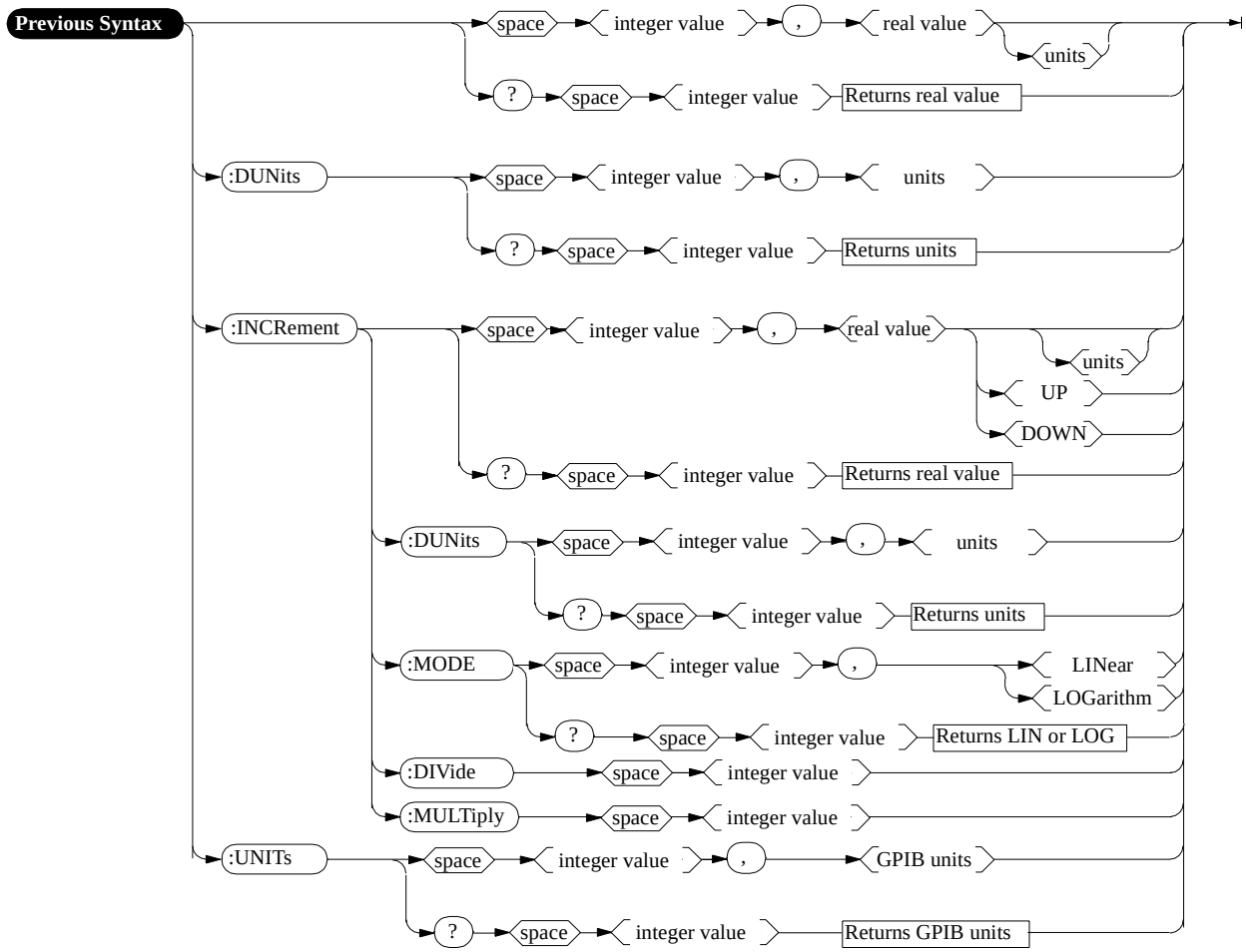

ManualsPlus.com

Number Measurement Syntax

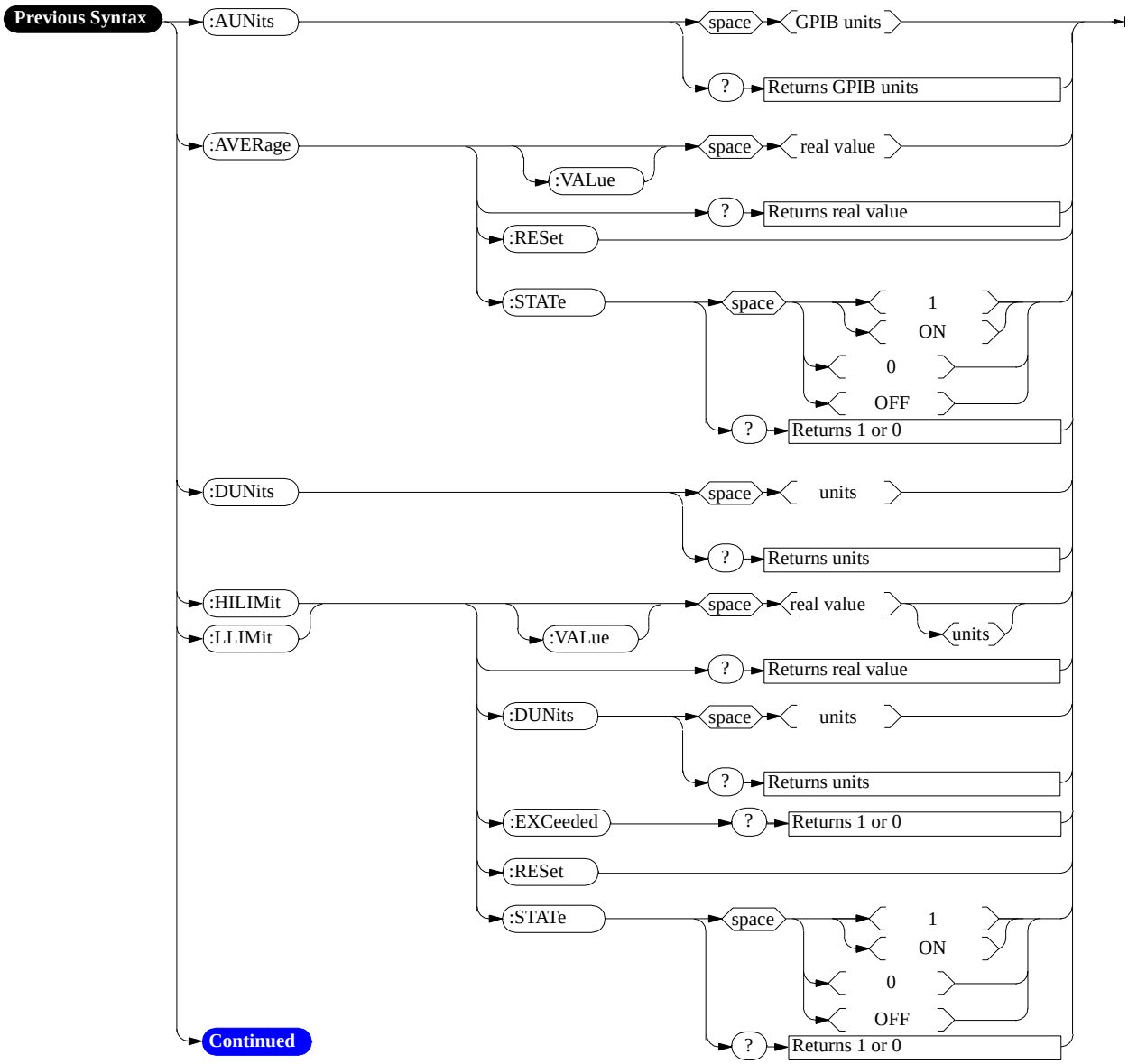

ManualsPlus.com

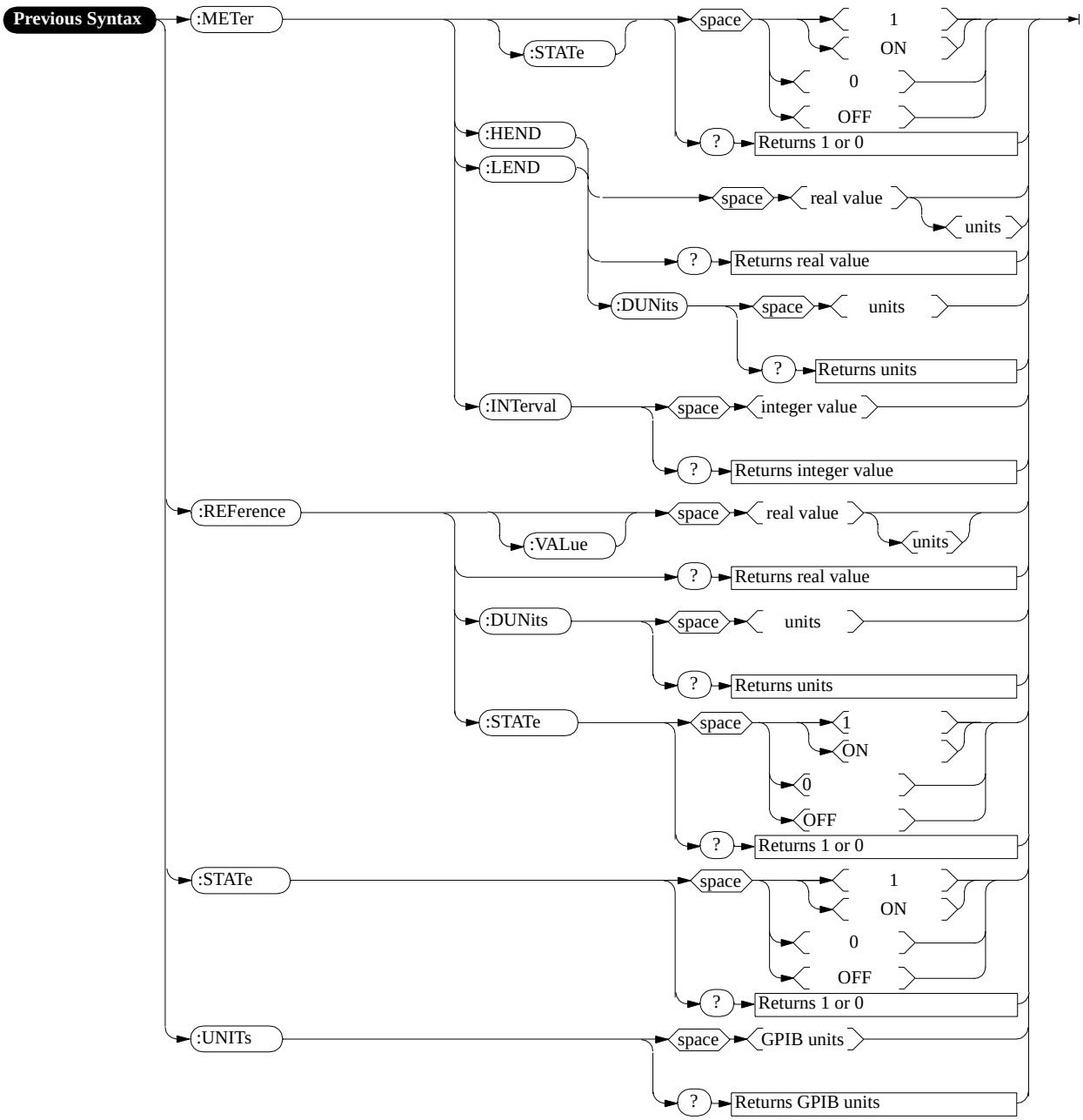

ManualsPlus.com

Multiple Number Measurement Syntax

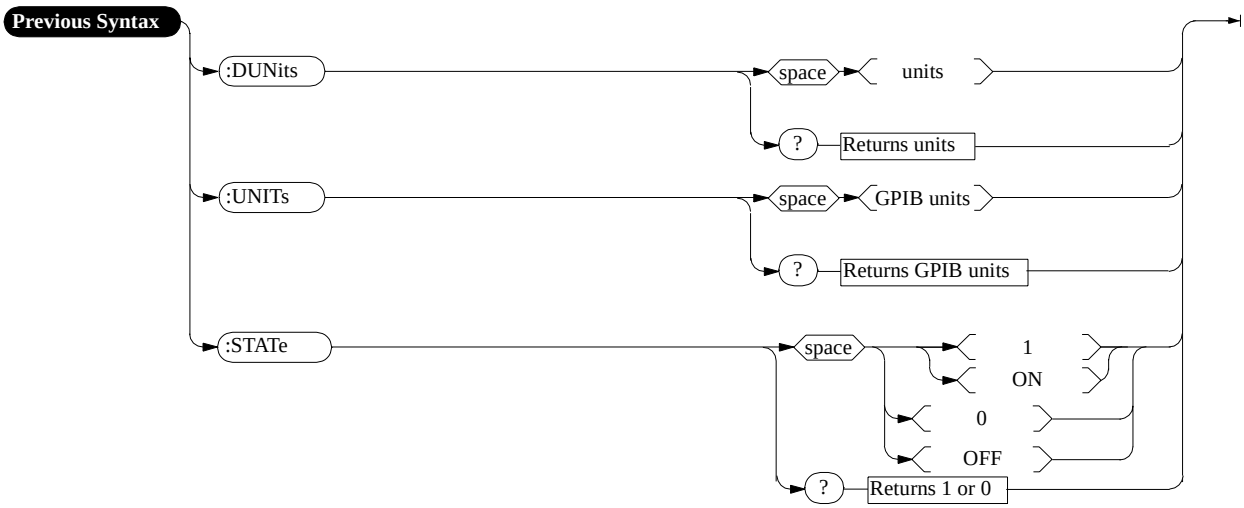

ManualsPlus.com

Equivalent Front-Panel Key Commands

Most front-panel keys have an equivalent GPIB command for remote use. The various key functions are explained in more detail in the *User's Guide*.

All command examples are in BASIC.

SHIFT key, CANCEL key, CURSOR CONTROL knob

These functions are not required for GPIB use, and have no equivalent GPIB commands.

DATA Keys

In addition to the numeric keys, the DATA keys contain the units-of-measure keys, and the ON/OFF, YES, NO, and ENTER keys. Setting units-of-measure through GPIB is described in **"Specifying Units-of-Measure for Settings and Measurement Results" on page 71**. The ON/OFF function is described in **"Using the STATe Command" on page 83**. The YES, NO, and ENTER keys are not required for GPIB use, and have no equivalent GPIB commands.

ManualsPlus.com

DATA FUNCTIONS Keys

The Data Functions keys can be divided into two groups; those which affect measurements (REF SET, METER, AVG, HI LIMIT and LO LIMIT), and those which affect numeric entry fields (INCR÷10, INCR SET, INCR×10, Up-arrow, Down-arrow). For measurements, the Data Functions enable the programmer to change the way measurements are calculated and displayed, and provide measurement limit detection. For numeric entry fields, the Data Functions enable the programmer to set, scale, and change the field's increment value. Each Data Function is described in detail in the Test Set's *User's Guide*.

Refer to the **"Number Measurement Syntax" on page 195** for full command syntax.

Guidelines for Using Measurement Data Functions

- Data Functions are turned ON and OFF for individual measurements. The GPIB Data Function commands must immediately follow the GPIB command for the individual measurement. For example, to turn the AVG Data Function ON for the Audio Frequency Analyzer Distortion measurement, the following command string would be sent to the Test Set:
  `OUTPUT 714;"MEAS:AFR:DISTN:AVER:STAT ON"`

- Attribute Units (AUNits) are used with the Data Functions to specify the units-of-measure for numeric data which is read or set through GPIB. Refer to **"Attribute Units (AUNits)" on page 77**.
- Data Function settings, such as Number of Averages or Reference value, are retained if the function is turned off. The setting values are initialized or changed under the following conditions:
  - The Test Set is turned off.
  - The Test Set is PRESET.
  - A saved register is recalled.

ManualsPlus.com

Guidelines for Using Numeric Entry Field Data Functions

- Increment values are set, scaled, and changed for individual numeric entry fields. The GPIB Data Function commands must immediately follow the GPIB command for the individual field. For example, to set the increment value for the RF Generator frequency to 2.5 MHZ, the following command string would be sent to the Test Set:
  OUTPUT 714;"RFG:FREQ:INCR 2.5 MHZ"

- GPIB Units (UNITs) are used with the Data Functions to specify the units-of-measure for numeric data which is read or set through GPIB. Refer to **"GPIB Units (UNITs)" on page 74**.
- Data Function settings are not retained. The setting values are initialized or changed under the following conditions:
  - The Test Set is turned off (values initialized on power up).
  - The Test Set is PRESET (values initialized).
  - A saved register is recalled (values changed to those in the recalled register).

AVG

The AVG data function is used to smooth noisy signals, that is, decrease or eliminate rapid fluctuations in amplitude. The GPIB command :AVERage is used to select this data function programmatically.

NOTE: Measurement averaging works the same way programmatically as it does manually

If the AVG data function is enabled manually and the number of averages is set to ten (N=10), the first value displayed is the average of 1 measurement, the second value displayed is the average of two measurements, the third value displayed is the average of three measurements… the tenth value displayed is the average of 10 measurements. For readings greater than N the data function approximates a hardware single-pole, RC low-pass filter.

If the AVG data function is enabled programmatically and the number of averages is set to ten (N=10) the first value returned through GPIB is the average of 1 measurement, the second value returned through GPIB is the average of two measurements, the third value returned through GPIB is the average of three measurements…the tenth value returned through GPIB is the average of 10 measurements. Each successive reading would mimic the output of a single-pole, RC low-pass filter that had been initially charged to the value of the tenth reading.

If a "true average" value is desired, that is $V_{avg} = (V_1+V_2+V_3 \ldots V_N)/N$, the recommended procedure through GPIB is to take N sequential readings and calculate the average within the program context

ManualsPlus.com

To Turn Measurement Averaging ON and OFF. Use the :AVERage:STATe commands to turn the averaging data function ON and OFF.

Syntax

```
:AVER age:STATe ON
:AVERage:STATe OFF
```

Example

```
OUTPUT 714;"MEAS:AFR:DISTN:AVER:STAT ON"
```

This turns the AVG Data Function ON for the Audio Frequency Analyzer Distortion measurement.

To Query the Measurement Averaging State. Use the :AVERage:STAT? commands to query the current state of the averaging data function. The returned value is either: 0 (OFF) or 1 (ON).

Syntax

```
:AVERage:STAT?
```

Example

```
OUTPUT 714;"MEAS:AFR:DISTN:AVER:STAT?”
ENTER 714;State_on_off ! 1 = ON, 0 = OFF
```

This queries the state of the AVG Data Function for the Audio Frequency Analyzer Distortion measurement.

ManualsPlus.com

To Reset Averaging. Use the :AVERage:RESet commands to restart the averaging algorithm used to calculate an averaged measurement.

Syntax

```
:AVERage:RESet
```

Example

```
OUTPUT 714;"MEAS:AFR:DISTN:AVER:RES"
```

This resets the AVG Data Function for the Audio Frequency Analyzer Distortion measurement.

To Set the Number of Averages. Use the :AVERage:VALue commands to set the number of averages used by the averaging algorithm.

Syntax

```
:AVERage:VALue
```

Example

```
OUTPUT 714;"MEAS:AFR:DISTN:AVER:VAL 25"
```

This sets the number of averages to 25 for the AVG Data Function for the Audio Frequency Analyzer Distortion measurement.

To Query the Number of Averages. Use the :AVERage:VALue? commands to query the number of averages used by the averaging algorithm.

Syntax

```
:AVERage:VALue?
```

Example

```
OUTPUT 714;"MEAS:AFR:DISTN:AVER:VAL?"
ENTER 714;Num_of_avgs
```

This queries the number of averages for the AVG Data Function for the Audio Frequency Analyzer Distortion measurement.

ManualsPlus.com

HI LIMIT and LO LIMIT

The HI LIMIT and LO LIMIT Data Functions are used to define a measurement "window" which can be used to detect measured values which are outside the defined limits. The GPIB commands :HLIMit (high limit) and :LLIMit (low limit) are used to set these data functions programmatically.

To Turn High and Low Measurement Limit Checking ON and OFF. Use the :HLIMit:STATe and :LLIMit:STATe commands to turn high and low measurement limit checking ON and OFF.

Syntax

```
:HLIMit:STATe ON
:HLIMit:STATe OFF
:LLIMit:STATe ON
:LLIMit:STATe OFF
```

Example

```
OUTPUT 714;"MEAS:AFR:DISTN:HLIM:STAT ON"
OUTPUT 714;"MEAS:AFR:DISTN:LLIM:STAT ON"
```

This turns high and low measurement limit checking ON for the Audio Frequency Analyzer Distortion measurement.

ManualsPlus.com

To Query the State of High and Low Measurement Limit Checking. Use the :HLIMit:STATe? and :LLIMit:STATe? commands to query the current state of the high and low measurement limit checking. The returned value is either: 0 (OFF) or 1 (ON).

Syntax

```
:HLIMit:STATe?
:LLIMit:STATe?
```

Example

```
OUTPUT 714;"MEAS:AFR:DISTN:LLIM:STAT?"
ENTER 714;Lo_state ! 1 = ON, 0 = OFF
OUTPUT 714;"MEAS:AFR:DISTN:HLIM:STAT?"
ENTER 714;Hi_state ! 1 = ON, 0 = OFF
```

This queries the state of high and low measurement limit checking for the Audio Frequency Analyzer Distortion measurement.

To Set High and Low Measurement Limits. Use the :HLIMit:VALue and :LLIMit:VALue commands to set the high and low measurement limit values.

Syntax

```
:HLIMit:VALue
:LLIMit:VALue
```

Example

```
OUTPUT 714;"MEAS:AFR:FM:HLIM 7.5 KHZ"
OUTPUT 714;"MEAS:AFR:FM:LLIM 2.5 KHZ"
```

This sets a high measurement limit of 7.5 kHz and a low measurement limit of
2.5 kHz for the Audio Frequency Analyzer FM Deviation measurement.

NOTE: When setting high and low limit values, a non–Attribute Unit unit-of-measure must be specified in the command string, otherwise the current Attribute Unit is assumed by the Test Set. Refer to **"Attribute Units (AUNits)" on page 77**.

ManualsPlus.com

To Set the Display Units for High and Low Measurement Limits. Use the :HLIMit:DUNits and :LLIMit:DUNits commands to set the units-of-measure used to display the high and low measurement limit values. Refer to **"Display Units (DUNits)" on page 71** for description of Display Units.

Syntax

```
:HLIMit:DUNits <disp_units>
:LLIMit:DUNits <disp_units>
```

Example

```
OUTPUT 714;"MEAS:AFR:FM:HLIM:DUN KHZ"
OUTPUT 714;"MEAS:AFR:FM:LLIM:DUN KHZ"
```

This sets the high and low measurement limit Display Units to kHz for the Audio Frequency Analyzer FM Deviation measurement.

NOTE: When querying measurement limits through GPIB, the Test Set always returns numeric values in Attribute Units, regardless of the current Display Units or GPIB Units settings. Numeric values are expressed in scientific notation. Refer to **"Attribute Units (AUNits)" on page 77**.

To Query the Display Units for High and Low Measurement Limits. Use the :HLIMit:DUNits? and :LLIMit:DUNits? commands to query the units-of-measure used to display the high and low measurement limit values. Refer to **"Display Units (DUNits)" on page 71** for description of Display Units.

Syntax

```
:HLIMit:DUNits?
:LLIMit:DUNits?
```

Example

```
OUTPUT 714;"MEAS:AFR:FM:HLIM:DUN?"
ENTER 714;Hi_disp_unit$
OUTPUT 714;"MEAS:AFR:FM:LLIM:DUN?"
ENTER 714;Lo_disp_unit$
```

This queries the high measurement limit Display Units for the Audio Frequency Analyzer FM Deviation measurement.

NOTE: When querying measurement limits through GPIB, the Test Set always returns numeric values in Attribute Units, regardless of the current Display Units or GPIB Units settings. Numeric values are expressed in scientific notation. Refer to **"Attribute Units (AUNits)" on page 77**.

ManualsPlus.com

To Query the High and Low Measurement Limit Settings. Use the :HLIMit:VALue? and :LLIMit:VALue? commands to query the high and low measurement limit settings.

Syntax

```
:HLIMit:VALue?
:LLIMit:VALue?
```

Example

```
OUTPUT 714;"MEAS:AFR:FM:HLIM:VAL?"
ENTER 714;High_limit
OUTPUT 714;"MEAS:AFR:FM:LLIM:VAL?"
ENTER 714;Low_limit
```

This queries the high and low measurement limits for the Audio Frequency Analyzer FM Deviation measurement.

NOTE: When querying measurement limits through GPIB, the Test Set always returns numeric values in Attribute Units, regardless of the current Display Units or GPIB Units settings. Numeric values are expressed in scientific notation. Refer to **"Attribute Units (AUNits)" on page 77**.

To Detect If a Measurement Limit Has Been Exceeded. Use the :HLIMit:EXCeeded? and :LLIMit:EXCeeded? commands to detect if a measurement limit has been exceeded. The returned value is either: 0 (NO) or 1 (YES).

Syntax

```
:HLIMit:EXCeeded?
:LLIMit:EXCeeded?
```

Example

```
ENTER 714;Hi_limit_exced ! 1= YES, 0 = NO
OUTPUT 714;"MEAS:AFR:FM:LLIM:EXC?"
ENTER 714;Lo_limit_exced ! 1= YES, 0 = NO
OUTPUT 714;"MEAS:AFR:FM:HLIM:EXC?"
```

This determines if the high or low measurement limits for the Audio Frequency Analyzer FM Deviation measurement have been exceeded.

ManualsPlus.com

To Reset Measurement Limit Detection. Use the :HLIMit:RESet and :LLIMit:RESet commands to reset measurement limit detection. Once a high or low measurement limit has been exceeded (:HLIMit:EXCeeded? returns a 1 or :LLIMit:EXCeeded? returns a 1), measurement limit detection is disabled until reset by the :RESet command.

Syntax

```
:HLIMit:RESet
:LLIMit:RESet
```

Example

```
OUTPUT 714;"MEAS:AFR:FM:HLI
OUTPUT 714;"MEAS:AFR:FM:LLIM:RES"
```

This resets high and low measurement limit detection for the Audio Frequency Analyzer FM Deviation measurement.

INCR SET

The Increment Set Data Function sets the increment value for real-number numeric entry fields. The GPIB command :INCRement is used to select this data function programmatically.

To Set the Increment Value. Use the :INCRement command to set the increment value.

Syntax

```
:INCRement
```

Example

```
OUTPUT 714;"RFG:FREQ:INCR 2.5 MHZ"
```

This sets the increment value for the **`RF Gen Freq`** field to 2.5 MHz.

NOTE: When setting the value of a numeric field (such as **`RF Gen Freq`**), any non–GPIB Unit unit-of-measure must be specified in the command string, otherwise the current GPIB Unit is assumed by the Test Set. Integer-only fields (such as **`Intensity`** and **`Print Adrs`**) have a fixed increment of 1and cannot be changed.

ManualsPlus.com

To Query the Increment Value. Use the :INCRement? command to query the increment value.

Syntax

```
:INCRement?
```

Example

```
OUTPUT 714;"RFG:FREQ:INCR?"
ENTER 714;Incr_value
```

This queries the increment value for the **`RF Gen Freq`** field.

NOTE: When querying a field setting or measurement result through GPIB, the Test Set always returns numeric values in GPIB Units or Attribute Units, regardless of the field's current Display Units setting. Refer to **"Attribute Units (AUNits)" on page 77** and **"GPIB Units (UNITs)" on page 74**.

To Set the Increment Mode. Use the :INCRement:MODE commands to set the increment mode to linear or logarithmic.

Syntax

```
:INCRement:MODE <LOGarithm or LINear>
```

Example

```
OUTPUT 714;"RFG:FREQ:INCR:MODE LOG"
```

This sets the increment mode for the RF Generator's frequency to logarithmic.

To Query the Increment Mode. Use the :INCRement:MODE? commands to query the increment mode.

Syntax

```
:INCRement:MODE?
```

Example

```
ENTER 714;Mode$ ! returns LIN or LOG
OUTPUT 714;"RFG:FREQ:INCR:MODE?"
```

This queries the increment mode of the RF Generator's frequency.

ManualsPlus.com

To Set the Increment Value Display Units. Use the :INCRement:DUNits commands to set the units-of-measure used to display the increment value. Refer to **"Display Units (DUNits)" on page 71** for description of Display Units.

Syntax

```
:INCRement:DUNits <disp_units>
```

Example

```
OUTPUT 714;"RFG:FREQ:INCR:DUN KHZ"
```

This sets the increment value's Display Units to kHz for the RF Generator's frequency.

NOTE: When querying a field setting through GPIB, the Test Set always returns numeric values in GPIB Units or Attribute Units, regardless of the field's current Display Units setting. Numeric values are expressed in scientific notation. Refer to **"Attribute Units (AUNits)" on page 77** and **"GPIB Units (UNITs)" on page 74**.

To Query the Increment Value Display Units. Use the :INCRement:DUNits? commands to query the units-of-measure used to display the increment value. Refer to **"Display Units (DUNits)" on page 71** for description of Display Units.

Syntax

```
:INCRement:DUNits?
```

Example

```
OUTPUT 714;"RFG:FREQ:INCR:DUN?"
ENTER 714;Disp_unit$
```

This queries the increment value's Display Units for the RF Generator's frequency.

ManualsPlus.com

INCR×10

The INCR×10 Data Function increases the increment setting by a factor of 10 (new increment setting = current increment setting × 10).

NOTE: Integer-only fields (such as **`Intensity`** and **`Print Adrs`**) have a fixed increment of 1, and cannot be changed.

Syntax

```
:INCRement:MULTiply
```

Example

```
OUTPUT 714;"RFG:FREQ:INCR:MULT"
```

If the RF Generator's frequency increment is 1 MHz, this command increases increment value from 1 MHz to 10 MHz.

INCR÷10

The INCR÷10 Data Function reduces the increment setting by a factor of 10 (new increment setting = current increment setting ÷ 10).

NOTE: Integer-only fields (such as **`Intensity`** and **`Print Adrs`**) have a fixed increment of 1, and cannot be changed.

Syntax

```
:INCRement:DIVide
```

Example

```
OUTPUT 714;"RFG:FREQ:INCR:DIV"
```

If the RF Generator's frequency increment is 10 MHz, this command reduces the increment value from 10 MHz to 1 MHz.

ManualsPlus.com

Increment Up/Down (Arrow Keys)

The Increment Up/Down (Arrow Keys) Data Functions change the field's setting by one increment value (up or down). The increment value is determined by the INCR SET (:INCRement) Data Function.

Syntax

```
:INCRement <UP or DOWN>
```

Example

```
OUTPUT 714;"RFG:FREQ:INCR UP"
```

This increases the RF Generator's frequency by one increment value.

METER

The METER Data Function enables/disables the analog bar-graph meter for certain measurements. The GPIB command :METer is used to select this data function programmatically.

To Turn the Meter ON and OFF. Use the :METer:STATe commands to turn the meter ON and OFF. The parameter can be a 1 or ON to turn the meter on and a 0 or OFF to turn the meter off.

Syntax

```
:METer:STATe <ON> or <1>
:METer:STATe <OFF> or <0>
```

Example

```
OUTPUT 714;"MEAS:RFR:POW:MET ON"
```

This turns the analog bar-graph meter ON for the TX Power measurement.

ManualsPlus.com

To Query the State of the Meter. Use the :METer:STATe? commands to query the state of the analog bar-graph meter. The query returns a 1 if the meter is ON, and a 0 if the meter is OFF.

Syntax

```
:METer:STATe?
```

Example

```
OUTPUT 714;"MEAS:RFR:POW:MET:STAT?"
ENTER 714;Meter_on_off ! returns a 1 (ON) or 0 (OFF)
```

This queries the state of the analog bar-graph meter for the TX Power measurement.

To Set the Number of Intervals on the Meter. Use the :METer:INTerval commands to set the number of intervals displayed on the analog bar-graph meter.

Syntax

```
:METer:INTerval <integer valve>
```

Example

```
OUTPUT 714;"MEAS:RFR:POW:MET:INT 5"
```

This sets the number of intervals displayed on the analog bar-graph meter for the TX Power measurement.

To Query the Number of Intervals on the Meter. Use the :METer:INTerval? commands to query the number of intervals displayed on the analog bar-graph meter.

Syntax

```
:METer:INTerval?
```

Example

```
OUTPUT 714;MEAS:RFR:POW:MET:INT?
ENTER 714;Num_intervals
```

This queries the number of intervals displayed on the analog bar-graph meter for the TX Power measurement.

ManualsPlus.com

To Set the Meter High End and Low End Points. Use the :METer:HEND and :MEter:LEND commands to set the analog bar-graph meter's high endpoint and low endpoint.

Syntax

```
:METer:HEND <real number>
:METer:LEND <real number>
```

Example

```
OUTPUT 714;"MEAS:RFR:POW:MET:HEND 20"
OUTPUT 714;"MEAS:RFR:POW:MET:LEND 10"
```

This sets the analog bar-graph meter's high endpoint to 20 watts and the low endpoint to 10 watts for the TX Power measurement.

NOTE: When setting the value of the METER Data Function through GPIB, a non-Attribute Unit unit-of-measure must be specified in the command string, otherwise the current Attribute Unit is assumed by the Test Set. Refer to **"Attribute Units (AUNits)" on page 77**.

To Query the Meter High End and Low End Points. Use the :METer:HEND? and :MEter:LEND? commands to query the analog bar-graph meter high endpoint and low endpoint.

Syntax

```
:METer:HEND?
:METer:LEND?
```

Example

```
OUTPUT 714;"MEAS:RFR:POW:MET:HEND?"
ENTER 714;Meter_hi_end
OUTPUT 714;"MEAS:RFR:POW:MET:LEND?"
ENTER 714;Meter_lo_end
```

This queries the high end point and low end point of the analog bar-graph meter for the TX Power measurement.

NOTE: When querying the value of the METER Data Function through GPIB, the Test Set always returns numeric values in Attribute Units, regardless of the current Display Units or GPIB Units settings. Numeric values are expressed in scientific notation. Refer to **"Attribute Units (AUNits)" on page 77**.

ManualsPlus.com

To Set the Meter High End and Low End Point Display Units. Use the :METer:HEND:DUNits and :MEter:LEND:DUNits commands to set the analog bar-graph meter high end point and low end point Display Units. Refer to **"Display Units (DUNits)" on page 71** for description of Display Units.

Syntax

```
:METer:HEND:DUNits <disp_units>
:METer:HEND:DUNits <disp_units>
```

Example

```
OUTPUT 714;"MEAS:RFR:POW:MET:HEND:DUN DBM"
OUTPUT 714;"MEAS:RFR:POW:MET:LEND:DUN DBM"
```

This sets the high end point and low end point display units of the analog bar-graph meter for the TX Power measurement to DBM.

NOTE: When querying the METER Data Function through GPIB, the Test Set always returns numeric values in Attribute Units, regardless of the current Display Units or GPIB Units settings. Numeric values are expressed in scientific notation.

To Query the Meter High End and Low End Point Display Units. Use the :METer:HEND:DUNits? and :MEter:LEND:DUNits? commands to query the analog bar-graph meter high end point and low end point Display Units. Refer to **"Display Units (DUNits)" on page 71** for description of Display Units.

Syntax

```
:METer:HEND:DUNits?
:METer:LEND:DUNits?
```

Example

```
OUTPUT 714;"MEAS:RFR:POW:MET:HEND:DUN?
OUTPUT 714;"MEAS:RFR:POW:MET:LEND:DUN?"
ENTER 714;Met_hidisp_unit$
ENTER 714;Met_lodisp_unit$
```

This queries the high end point and low end point display units of the analog bar-graph meter for the TX Power measurement.

NOTE: When querying the METER Data Function through GPIB, the Test Set always returns numeric values in Attribute Units, regardless of the current Display Units or GPIB Units settings. Numeric values are expressed in scientific notation.

ManualsPlus.com

REF SET

The REF SET Data Function establishes a measurement reference point. The GPIB command :REFerence is used to select this data function programmatically.

To Turn Measurement Reference Points ON and OFF. Use the :REFerence:STATe <boolean> commands to turn measurement reference points ON and OFF. The <boolean> parameter can be a 1 or ON to turn measurement reference points on, and a 0 or OFF to turn measurement reference points off.

Syntax

```
:REFerence:STATe <ON> or <1>
:REFerence:STATe <OFF> or <0>
```

Example

```
OUTPUT 714;"MEAS:RFR:POW:REF:STAT ON"
```

This turns the measurement reference point for the TX Power measurement ON.

To Query the State of Measurement Reference Points. Use the :REFerence:STATe? commands to query the state of a measurement reference point. The query returns a 1 if a measurement reference points is ON, and a 0 if a measurement reference points is OFF.

Syntax

```
:REFerence:STATe?
```

Example

```
OUTPUT 714;"MEAS:RFR:POW:REF:STAT?"
ENTER 714;Meter_on_off ! returns a 1 (ON) or 0 (OFF)
```

This queries the state of the measurement reference point for the TX Power measurement.

ManualsPlus.com

To Set A Measurement Reference Point. Use the :REFerence:VALue commands to set a measurement reference point.

Syntax

```
:REFerence:VALue <real number
```

Example

```
OUTPUT 714;"MEAS:RFR:POW:REF:VAL 20"
```

This sets the measurement reference point for the TX Power measurement to 20 watts.

NOTE: When setting a measurement reference point, any non–Attribute Unit "unit-of-measure" must be specified in the command string, otherwise the current Attribute Unit is assumed by the Test Set. Refer to **"Attribute Units (AUNits)" on page 77**.

To Query A Measurement Reference Point. Use the :REFerence:VALue? commands to query a measurement reference point.

Syntax

```
:REFerence:VALue?
```

Example

```
OUTPUT 714;"MEAS:RFR:POW:REF:VAL?"
ENTER 714;Ref_val
```

This queries the measurement reference point for the TX Power measurement.

NOTE: When querying a measurement reference point through GPIB, the Test Set always returns numeric values in Attribute Units, regardless of the current Display Units or GPIB Units settings. Numeric values are expressed in scientific notation. Refer to **"Attribute Units (AUNits)" on page 77**.

ManualsPlus.com

To Set Measurement Reference Point Display Units. Use the :REFerence:DUNits commands to set a measurement reference point's Display Units. Refer to **"Display Units (DUNits)" on page 71** for description of Display Units.

Syntax

```
:REFerence:DUNits <disp_units>
```

Example

```
OUTPUT 714;"MEAS:RFR:POW:REF:DUN DBM"
```

This sets the measurement reference point's Display Units for the TX Power measurement to dBm.

NOTE: When querying a measurement reference point through GPIB, the Test Set always returns numeric values in Attribute Units, regardless of the current Display Units or GPIB Units settings. Numeric values are expressed in scientific notation.

To Query Measurement Reference Point Display Units. Use the :REFerence:DUNits? commands to query a measurement reference point's Display Units. Refer to **"Display Units (DUNits)" on page 71** for description of Display Units.

Syntax

```
:REFerence:DUNits?
```

Example

```
OUTPUT 714;"MEAS:RFR:POW:REF:DUN?"
ENTER 714;Disp_unit$
```

This queries the measurement reference point's Display Units for the TX Power measurement.

NOTE: When querying a measurement reference point through GPIB, the Test Set always returns numeric values in Attribute Units, regardless of the current Display Units or GPIB Units settings. Numeric values are expressed in scientific notation.

ManualsPlus.com

INSTRUMENT STATE Keys

ADRS

The ADRS key displays the Test Set's GPIB address in the upper left-hand corner of the CRT. There is no equivalent GPIB command for the ADRS key. The current address can also be viewed by looking at the **HP-IB Adrs** field on the I/O CONFIGURE screen.

The Test Set's GPIB address can be changed through GPIB by using the :CONFigure:BADDress commands. If the Test Set's GPIB address is changed programmatically, all future GPIB commands must use the new address.

Syntax

```
CONFigure:BADDress <integer number>
```

Example

```
OUTPUT 714;"CONF:BADD 15"
```

This sets the Test Set's GPIB address to 15.

The Test Set's GPIB address can be queried through GPIB by using the :CONFigure:BADDress? commands.

Syntax

```
'CONFigure:BADDress?
```

Example

```
OUTPUT 714;"CONF:BADD?"
ENTER 714;Address
```

This queries the Test Set's GPIB address.

ManualsPlus.com

LOCAL

The LOCAL key returns the Test Set to local, front-panel control. The Test Set returns to Local operation (full front-panel control) when either the Go To Local (GTL) bus command is received, the front-panel LOCAL key is pressed or the REN line goes false. When the Test Set returns to local mode the output signals and internal settings remain unchanged, except that triggering is reset to TRIG:MODE:SETT FULL;RETR REP. The LOCAL key will not function if the Test Set is in the local lockout mode.

MEAS RESET

The MEAS RESET key clears the measurement history for all of the Test Set's measurement algorithms: Averaging (AVG key, Spectrum Analyzer trace averaging), Measurement limit checking (HI LIMIT and LO LIMIT keys), Peak Hold (AF Analyzer peak hold detectors, Spectrum Analyzer trace peak hold), autotuning and autoranging, and re-starts all active measurements. The GPIB commands :MEASure:RESet are used to select this function programmatically.

Syntax

```
:MEASure:RESet
```

Example

```
OUTPUT 714;":MEAS:RES"
```

This resets all of the active measurements in the Test Set.

PRESET

The PRESET key resets the Test Set to its power-up state. The IEEE 488.2 Common Command *RST is used to select this function programmatically.

Syntax

```
*RST
```

Example

```
OUTPUT 714;"*RST"
```

This resets the Test Set to its power-up state.

ManualsPlus.com

RECALL

The RECALL key is used to recall an instrument state that has been saved using the SAVE key. The GPIB commands :REGister:RECall are used to select this function programmatically. The SAVE/RECALL mass storage device is selected using the *SAVE/RECALL* field on the I/O CONFIGURE screen.

Syntax

```
:REGister:RECall '<file name>'
```

Example

```
OUTPUT 714;":REG:REC 'SETUP1'"
```

This recalls the instrument state saved in the file SETUP1.

See Also

"*SAV (Save Instrument State)" on page 257
"*RCL (Recall Instrument State)" on page 256

SAVE

The SAVE key is used to save an instrument state. The GPIB commands :REGister:SAVE are used to select this function programmatically. The SAVE/RECALL mass storage device is selected using the *SAVE/RECALL* field on the
I/O CONFIGURE screen.

Syntax

```
REGister:SAVE '<file name>'
```

Example

```
OUTPUT 714;"REG:SAVE 'SETUP1'"
```

This saves the instrument state to a file named SETUP1:

ManualsPlus.com

Removing Saved Instrument States. One or all of the saved instrument states can be removed from the selected save/recall mass storage device. The save/recall mass storage device is selected using the **SAVE/RECALL** field on the I/O CONFIGURE screen. The GPIB commands :REGister:CLEar are used to perform this function programmatically.

Syntax

```
:REGister:CLEar '<file name>'
:REGister:CLEar:ALL
```

NOTE: The :REGister:CLEar:ALL command is only valid for the *internal* SAVE/RECALL mass storage device. To clear all saved instrument states from the Card, RAM, or Disk SAVE/RECALL mass storage devices, each file must be removed individually using the :REGister:CLEar '<file name>' command.

Example

```
OUTPUT 714;"REG:CLE 'SETUP2'"
```

This clears the instrument state SETUP2 from the selected SAVE/RECALL mass storage device.

Example

```
OUTPUT 714;"REG:CLE:ALL"
```

This clears all saved instrument states from the *internal* SAVE/RECALL mass storage device.

See Also

"*SAV (Save Instrument State)" on page 257
"*RCL (Recall Instrument State)" on page 256

ManualsPlus.com

SCREEN CONTROL Keys and To Screen Field

In manual mode, the RX, TX, DUPLEX, TESTS, MSSG, HELP, CONFIG keys and the **`To Screen`** field selections are used to display the various Test Set screens on the CRT. The GPIB command :DISPlay is used to perform this function programmatically. See **Table 13 on page 224** for the screen mnemonics for the DISPlay command.

To Select a Screen

Use the :DISPlay command to select the desired screen.

Syntax

```
:DISPlay <screen mnemonic>
```

Example

```
OUTPUT 714;"DISP AFAN"
```

This displays the Audio Frequency Analyzer screen.

To Query Currently Displayed Screen

Use the :DISPlay? command to query the currently displayed screen.

Syntax

```
:DISPlay?
```

Example

```
OUTPUT 714;"DISP?"
ENTER 714;Disp_screen$
```

This queries the currently displayed screen.

ManualsPlus.com

HOLD

The HOLD key is used to hold/resume all active measurements. There is no equivalent GPIB command for the HOLD key. However, the functionality of the HOLD key can be implemented remotely by using Single Triggering of measurements. Refer to **"Triggering Measurements" on page 258**.

PREV

The PREV key is used to display the previously displayed screen. There is no equivalent GPIB command for the PREV key function.

PRINT

The PRINT key is used to print a "pixel dump" of the currently displayed screen to an external printer. There is no equivalent GPIB command to the PRINT key. To print measurement results through GPIB, the program must query the measurement and print the result in a format determined by the programmer.

USER Keys

The USER Keys k1 through k5 and k1' through k3' can be assigned to various Test Set fields for operator convenience. There are no equivalent GPIB commands for assigning Test Set fields to the USER keys. The IBASIC Programming language ON KEY command could be used to force execution of a user written IBASIC routine which emulates the user key to Test Set field assignment (while an IBASIC program is running). Refer to the *Instrument BASIC Users Handbook* for further information on the ON KEY command.

ManualsPlus.com

Table 13 Screen Mnemonics for the DISPlay Command

Mnemonic	Screen		Mnemonic	Screen
ACNTrol	CALL CONTROL			
ACPower	ADJACENT CHANNEL POWER		RFGen	RF GENERATOR
AFANalyzer	AF ANALYZER		RINTerface	RADIO INTERFACE
CBIT	CALL BIT		RX	RX TEST
CCNFigure	CALL CONFIGURE		SANalyzer	SPECTRUM ANALYZER
CDATa	CALL DATA		SERVice	SERVICE
CMEasure	ANALOG MEAS		TCONfigure	TESTS (External Devices)
CONFigure	CONFIGURE		TDMA Test	TDMA DUAL MODE CELLULAR TEST
DECoder	SIGNALING DECODER		TESTs	TESTS (Main Menu)
DMEasure	DIGITAL MEASURE-MENTS		TFReq	TESTS (Channel Information)
DUPLex	DUPLEX TEST		THLP	TESTS HELP
ENCoder	SIGNALING ENCODER		TIBasic	TESTS (IBASIC Controller)
HELP	HELP		TMAKe	TESTS (Save/Delete Procedure)
IOConfigure	I/O CONFIGURE		TPARm	TESTS (Tests Parameters)
MESSages	MESSAGE		TPRint	TESTS (Printer Setup)
OSCilloscope	OSCILLOSCOPE		TSEQn	TESTS (Order of Tests)
PCONfigure	PRINT CONFIGURE		TSPec	TESTS (Pass/Fail Limits)
PDCtest	PDC CELLULAR TEST		TX	TX TEST
PHPtest	PHP CELLULAR TEST			
RFANalyzer	RF ANALYZER			

ManualsPlus.com

ManualsPlus.com

IEEE 488.2 Common Commands

The IEEE 488.2 Standard defines a set of common commands which provide for uniform communication between devices on the GPIB. These commands are common to all instruments which comply with the IEEE 488.2 Standard. These commands control some of the basic instrument functions, such as instrument identification, instrument reset, and instrument status reporting.

The following common commands are implemented in the Test Set:

Table 14 **Test Set IEEE 488.2 Common Commands**

Mnemonic	Command Name
*CLS	Clear Status Command
*ESE	Standard Event Status Enable Command
*ESE?	Standard Event Status Enable Query
*ESR?	Standard Event Status Register Query
*IDN?	Identification Query
*OPC	Operation Complete Command
*OPC?	Operation Complete Query
*OPT?	Option Identification Query
*PCB	Pass Control Back Command
*RCL	Recall Command
*RST	Reset Command
*SAV	Save Command
*SRE	Service Request Enable Command
*SRE?	Service Request Enable Query
*STB?	Read Status Byte Query
*TRG	Trigger Command
*TST?	Self-Test Query
*WAI	Wait-to-Continue Command

ManualsPlus.com

Common Command Descriptions

*IDN? (Identification Query)

The *IDN? query causes a device to send its identification information over the bus. The Test Set responds to the *IDN? command by placing its identification information, in ASCII format, into the Output Queue. The response data is obtained by reading the Output Queue into a string variable of length 72. The response data is organized into four fields separated by commas. The field definitions are described in **Table 15**.

Table 15 **Device Identification**

Field	Contents	Typical Response from Test Set	Comments
1	Manufacturer	Agilent Technologies	
2	Model	8920A	
3	Serial Number	US12345678	ASCII character “0”, decimal value 48, if not available
4	Firmware Revision Level	A.02.04	ASCII character “0”, decimal value 48,if not available

NOTE: The Serial Number format can take one of two forms:

AAXXXXXXXX
or
XXXXAXXXXX

A = alpha character
X = numeric character

The form returned will depend upon the manufacturing date of the Test Set being queried.

Example program

```
10 DIM A$[72]
20 OUTPUT 714;"*IDN?"
30 ENTER 714;A$
40 PRINT A$
50 END
```

Example response

```
Agilent Technologies,8920B,US35210066,B.02.31
```

ManualsPlus.com

*OPT? (Option Identification Query)

The *OPT? command tells the Test Set to identify any reportable device options or filters installed in the unit. The Test Set responds to the *OPT? command by placing information which describes any reportable installed options into the Output Queue. The data is in ASCII format. The response data is obtained by reading the Output Queue into a string variable. The response data is organized into fields separated by commas.

Example program

```
10 DIM A$[255]
20 OUTPUT 714;"*OPT?"
30 ENTER 714;A$
40 PRINT A$
50 END
```

Example response

```
CCITT,6KHZ BPF
```

ManualsPlus.com

***RST (Reset)**

The *RST command resets the Test Set. When the *RST command is received the majority of fields in the Test Set are “restored” to a default value, some fields are “maintained” at their current state and some are “initialized” to a known state. Other operational characteristics are also affected by the *RST command as follows:

- All pending operations are aborted.
- The Test Set’s display screen is in the UNLOCKED state.
- Measurement triggering is set to TRIG:MODE:SETT FULL;RETR REP.
- Any previously received Operation Complete command (*OPC) is cleared.
- Any previously received Operation Complete query command (*OPC?) is cleared.
- The power-up self-test diagnostics are not performed.
- The contents of the SAVE/RECALL registers are not affected.
- Calibration data is not affected.
- The GPIB interface is not reset (any pending Service Request is not cleared).
- All Enable registers are unaffected: Service Request, Standard Event, Communicate, Hardware #1, Hardware #2, Operation, Calibration, and Questionable Data/Signal.
- All Negative Transition Filter registers are unaffected: Communicate, Hardware #1, Hardware #2, Operational, Calibration, and Questionable Data/Signal.
- All Positive Transition Filter registers are unaffected: Communicate, Hardware #1, Hardware #2, Operational, Calibration, and Questionable Data/Signal.
- The contents of the RAM memory are unaffected.
- The contents of the Output Queue are unaffected.
- The contents of the Error Queue are unaffected.

ManualsPlus.com

*TST? (Self-Test Query)

The *TST? self-test query causes the Test Set to execute a series of internal self-tests and place a numeric response into the Output Queue indicating whether or not the Test Set completed the self-test without any detected errors. The response data is obtained by reading the Output Queue into a numeric variable, real or integer. Upon successful completion of the self-test the Test Set settings are restored to their values prior to receipt of the *TST? command. The numeric response definition is as shown in **Table 16**.

Table 16 Self-Test Response

Detected Error	Returned Error Code (Decimal)	Error Code Displayed on Test Set's CRT (Hexadecimal)
None (all self-tests passed)	0	0000
68000 Processor Failure	2	0002
ROM Checksum Failure	4	0004
Standard Non-Volatile System RAM Failure	8	0008
Non-Volatile System RAM Failure	16	0010
6840 Timer Chip Failure	32	0020
Real-time Clock Chip Failure	64	0040
Keyboard Failure (stuck key)	128	0080
RS-232 Chip (I/O option installed and not functioning correctly)	256	0010
Serial Bus Communications Failure with a Standard Board	512	0200
Signaling Board Self-Test Failure	1024	0400
CRT Controller Self-Test Failure	2048	0800
Miscellaneous Hardware Failure	4096	1000

Example program

```
10 INTEGER Slf_tst_response
20 OUTPUT 714;"*TST?"
30 ENTER 714;Slf_tst_respons
40 PRINT Slf_tst_respons
50 END
```

Example response

```
512
```

ManualsPlus.com

*OPC (Operation Complete)

The *OPC command allows for synchronization between the Test Set and an external controller. The *OPC command causes the Test Set to set bit 0, Operation Complete, in the Standard Event Status Register to the TRUE, logic 1, state when the Test Set completes all pending operations. Detection of the Operation Complete message can be accomplished by continuous polling of the Standard Event Status Register using the *ESR? common query command. However, using a service request eliminates the need to poll the Standard Event Status Register thereby freeing the controller to do other useful work.

NOTE: The *OPC command does not necessarily cause bit 0 in the Standard Event Status Register to be set true immediately following a measurement completion or the completion of a state or condition change in the Test Set. The instrument control processor is able to query the signal measurement instrumentation to determine if a measurement cycle has completed. However, the instrument control processor is not able to query the signal generation instrumentation to determine if the signal(s) have settled. In order to ensure that all signals have settled to proper values, the instrument control processor initiates a one-second delay upon receipt of the *OPC, *OPC? and *WAI commands. In parallel with the one-second timer the instrument control processor commands all active measurements to tell it when the measurement(s) are done. If an active (on) measurement displays four dashes (----) and the Test Set is configured with a PCS Interface, the *OPC, *OPC? and *WAI commands are never “done”. Turn off any measurements that may cause this condition, or command the Test Set to single trigger mode. If the Test Set is not configured with a PCS Interface, and an active measurement displays four dashes (----), the conditions required to satisfy *OPC, *OPC? and *WAI commands may be satisfied, but a valid measurement result will not be obtained.It is only when all active measurements are done and the one-second timer has elapsed, that the *OPC, *OPC? and *WAI commands are satisfied. Many state changes or measurement cycles take much less than one second. For this reason, *OPC should not be used when program execution speed is an issue.

ManualsPlus.com

CAUTION: The *OPC? command should not be used for determining if a call processing state command has completed successfully. Call processing subsystem states do not complete, a state is ither active or inactive. Using the *OPC? command with a call processing subsystem state command results in a deadlock condition. The control program will continuously query the output queue for a 1, but a 1 will never be placed in the output queue because the command never "completes."

For example, the following command sequence should *not* be used:

OUTPUT 714;"CALLP:ACTive;*OPC?"

The *OPC? command should not be used with any of the following call processing subsystem commands: :ACTive, :REGister, :PAGE, :HANDoff, :RELease.

The Call Processing Subsystem Status Register Group should be used to control program flow. Refer to **Chapter 8, "Programming the Call Processing Subsystem," on page 461** for more information on controlling program flow using the call processing subsystem status register group.

Example program: Using *OPC to generate a Service Request

```
10  OUTPUT 714;"*SRE 32" ! Enable SRQ on events in the Standard Event Status Register
20  OUTPUT 714;"*ESE 1" ! Enable Operation Complete bit in Standard Event Status Register
30  ON INTR 7,15 CALL Srvice_interupt ! Set up interrupt
40  ENABLE INTR 7;2 ! Enable SRQ interrupts
50  OUTPUT 714;"DISP RFG;RFG:OUTP 'Dupl';AMPL 0 dBm;FREQ 320 MHz;*OPC"
60  LOOP ! Dummy loop to do nothing
70    DISP "I am in a dummy loop."
80  END LOOP
90  END
100 SUB Srvice_interupt
110  PRINT "All operations complete."! Note: This interrupt service routine is
120  !not complete. Refer to "Status Byte/Service Request Enable Register" in
130  !Status Reporting in the Agilent 8920B Programmer's Guide for complete information.
140 SUBEND
```

The above program enables bit 0 in the Standard Event Status Enable Register and also bit 5 in the Service Request Enable Register so that the Test Set will request service whenever the OPC event bit becomes true. After the service request is detected the program can take appropriate action.

Refer to **"Status Byte Register" on page 277** and **"Service Request Enable Register" on page 331** for further information.

ManualsPlus.com

Example program: Using *OPC through polling of the Standard Event Status Register

```
10 INTEGER Stdevnt_reg_val
20 OUTPUT 714;"DISP RFG;RFG:OUTP 'Dupl';AMPL 0 dBm;FREQ 320 MHz;*OPC"
30 LOOP
40  OUTPUT 714;"*ESR?"                  ! Poll the register
50  ENTER 714;Stdevnt_reg_val
60  EXIT IF BIT(Stdevnt_reg_val,0)      ! Exit if Operation Complete bit set
70 END LOOP
80 PRINT "All operations complete."
90 END
```

ManualsPlus.com

*OPC? (Operation Complete Query)

The *OPC? query allows for synchronization between the Test Set and an external controller by reading the Output Queue or by polling the Message Available (MAV) bit in the Status Byte Register. The *OPC? query causes the Test Set to place an ASCII character, 1, into its Output Queue when the Test Set completes all pending operations. A consequence of this action is that the MAV bit in the Status Byte Register is set to the 1 state.

NOTE: The Test Set contains signal generation and signal measurement instrumentation. The instrument control processor is able to query the signal measurement instrumentation to determine if a measurement cycle has completed. However, the instrument control processor is not able to query the signal generation instrumentation to determine if the signal(s) have settled. In order to ensure that all signals have settled to proper values, the instrument control processor initiates a one-second delay upon receipt of the *OPC, *OPC? and *WAI commands. In parallel with the one-second timer the instrument control processor commands all active measurements to tell it when the measurement(s) are done. When all active measurements are done and the one-second timer has elapsed, the *OPC, *OPC? and *WAI commands are satisfied.

CAUTION: The *OPC? command should not be used for determining if a call processing state command has completed successfully. Call processing subsystem states do not complete, a state is ither active or inactive. Using the *OPC? command with a call processing subsystem state command results in a deadlock condition. The control program will continuously query the output queue for a 1, but a 1 will never be placed in the output queue because the command never “completes.”

For example, the following command sequence should *not* be used:

```
OUTPUT 714;"CALLP:ACTive;*OPC?"
```

The *OPC? command should not be used with any of the following call processing subsystem commands: :ACTive, :REGister, :PAGE, :HANDoff, :RELease.

The Call Processing Subsystem Status Register Group should be used to control program flow. Refer to **Chapter 8, “Programming the Call Processing Subsystem,” on page 461** for more information on controlling program flow using the call processing subsystem status register group.

ManualsPlus.com

Using the *OPC? query by reading Output Queue

Bit 4 in the Service Request Enable Register is set to a value of zero (disabled). The *OPC? query is sent to the Test Set at the end of a command message data stream. The application program then attempts to read the *OPC? query response from the Test Set's Output Queue. The Test Set will not put a response to the *OPC? query into the Output Queue until the commands have all finished.

NOTE: Reading the response to the *OPC? query has the penalty that both the GPIB bus and the Active Controller handshake are in temporary holdoff state while the Active Controller waits to read the *OPC? query response from the Test Set.

Example program

```
10 INTEGER Output_que_val
20 OUTPUT 714;"*SRE 0"! Disable Service Requests
30 OUTPUT 714;"DISP RFG;RFG:OUTP 'Dupl';AMPL 0 dBm;FREQ 320 MHz;*OPC?"
40 ENTER 714;Output_que_val ! Program will wait here until all
50                          ! operations complete
60 PRINT "All operations complete."
70 END
```

Using the *OPC? query to set the MAV bit in the Status Byte Register

Bit 4 in the Service Request Enable Register is set to a value of 1 (enabled). The *OPC? query is sent to the Test Set at the end of a command message data stream. The Test Set will request service when the MAV bit in the Status Byte register is set to the TRUE, logic 1, state. After the service request is detected the application program can take appropriate action.

Refer to "Status Byte Register" and "Service Request Enable Register" in the Advanced Operations chapter of the *Agilent 8920B Programmer's Guide* for further information.

ManualsPlus.com

Example program

```
10  OUTPUT 714;"*SRE 16"                ! Enable SRQ on data available in
20                                      ! Output Queue (MAV bit)
30  ON INTR 7,15 CALL Srvice_interupt   ! Set up interrupt
40  ENABLE INTR 7;2                     ! Enable SRQ interrupts
50  OUTPUT 714;"DISP RFG;RFG:OUTP 'Dupl';AMPL 0 dBm;FREQ 320 MHz;*OPC?"
60  LOOP                                ! Dummy loop to do nothing
70   DISP "I am in a dummy loop."
80  END LOOP
90  END
100 SUB Srvice_interupt
110  ENTER 714;Output_que_val           ! Read the 1 returned by the *OPC?
120                                     ! query command
130  PRINT "All operations complete."
140  ! Note:
150  ! This interrupt service routine is not complete.
160  ! Refer to "Status Byte/Service Request Enable Register" in
170  !Status Reporting in the Agilent 8920B Programmer's Guide .
180 SUBEND
```

ManualsPlus.com

*WAI (Wait To Complete)

The *WAI command stops the Test Set from executing any further commands or queries until all commands or queries preceding the *WAI command have completed.

Example statement

```
OUTPUT 714;"DISP RFG;RFG:OUTP 'Dupl';*WAI;AMPL 0 dBm"
```

NOTE: The Test Set contains signal generation and signal measurement instrumentation. The instrument control processor is able to query the signal measurement instrumentation to determine if a measurement cycle has completed. However, the instrument control processor is not able to query the signal generation instrumentation to determine if the signal(s) have settled. In order to ensure that all signals have settled to proper values, the instrument control processor initiates a one-second delay upon receipt of the *OPC, *OPC? and *WAI commands. In parallel with the one-second timer the instrument control processor commands all active measurements to tell it when the measurement(s) are done. When all active measurements are done and the one-second timer has elapsed, the *OPC, *OPC? and *WAI commands are satisfied.

CAUTION: The *WAI command should not be used for determining if a Call Processing Subsystem state command has completed successfully. Call Processing Subsystem states do not complete, a state is either active or not active. Using the *WAI command with a Call Processing Subsystem state command results in a deadlock condition. The Test Set will not process any further GPIB commands until the Call Processing Subsystem command preceding the *WAI command completes but the command never 'completes'.

For example, the following command sequence should not be used:

OUTPUT 714;"CALLP:ACTive;*WAI;:CALLP:REGister"

The *WAI command should not be used with any of the following Call Processing Subsystem commands: :ACTive, :REGister, :PAGE, :HANDoff, :RELease.

The Call Processing Subsystem Status Register Group should be used to control program flow.

ManualsPlus.com

***CLS (Clear Status)**

The *CLS command clears the contents (sets all bits to zero) of all Event Registers summarized in the Status Byte. The *CLS command also empties all queues (removes all current messages) which are summarized in the Status Byte, except the Output Queue. The following Event Registers are affected:

Hardware 1 Status Register
Hardware 2 Status Register
Questionable Data/Signal Register
Standard Event Status Register
Operational Status Register
Calibration Status Register
Communicate Status Register

The Following message queues are affected:

Error Message Queue

NOTE: The *CLS command does not clear the contents of the Message screen which is displayed on the CRT when SHIFT, RX is selected. This display is only cleared when the unit is powered on.

***ESE (Standard Event Status Enable)**

The Test Set responds to the *ESE command. See “Standard Event Status Register Group” in the Advanced Operations chapter of the *Agilent 8920B Programmer’s Guide* for a detailed explanation of the *ESE command.

***ESE? (Standard Event Status Enable Query)**

The Test Set responds to the *ESE? command. See “Standard Event Status Register Group” in the Advanced Operations chapter of the *Agilent 8920B Programmer’s Guide* for a detailed explanation of the *ESE? command.

***ESR? (Standard Event Status Register Query)**

The Test Set responds to the *ESR? command. See “Standard Event Status Register Group” in the Advanced Operations chapter of the *Agilent 8920B Programmer’s Guide* for a detailed explanation of the *ESR? command.

ManualsPlus.com

***PCB (Pass Control Back)**

The Test Set accepts the *PCB command. Refer to “Passing Instrument Control” in the Advanced Operations chapter of the *Agilent 8920B Programmer’s Guide.*

***SRE (Service Request Enable)**

The Test Set responds to the *SRE command. See “Status Byte Register” and “Service Request Enable Register” in the Advanced Operations chapter of the *Agilent 8920B Programmer’s Guide* for a detailed explanation of the *SRE command.

***SRE? (Service Request Enable Query)**

The Test Set responds to the *SRE? command. See “Status Byte Register” and “Service Request Enable Register” in the Advanced Operations chapter of the *Agilent 8920B Programmer’s Guide* for a detailed explanation of the *SRE? command.

***STB? (Status Byte Query)**

The Test Set responds to the *STB? command. See “Status Byte Register” and “Service Request Enable Register” in the Advanced Operations chapter of the *Agilent 8920B Programmer’s Guide* for a detailed explanation of the *STB? command.

***TRG (Trigger)**

The *TRG command is equivalent to the IEEE 488.1 defined Group Execute Trigger (GET) message and has the same effect as a GET when received by the Test Set. The Test Set responds to the *TRG command by triggering all currently active measurements.

ManualsPlus.com

***RCL (Recall Instrument State)**

The *RCL command restores the state of the Test Set from a file previously stored in battery-backed internal memory, on a memory card, on a RAM disk, or on an external disk. The *RCL command is followed by a decimal number in the range of 0 to 99 which indicates which Test Set SAVE/RECALL file to recall. The mass storage location for SAVE/RECALL files is selected using the **SAVE/RECALL** field on the I/O CONFIGURE screen.

The *RCL command cannot be used to recall files with names which contain non-numeric characters or a decimal number greater than 99. To recall SAVE/RECALL files saved with names which contain non-numeric characters or a decimal number greater than 99, use the REG:RECall filename command (see RECALL in the “Equivalent Front-Panel Key Commands” section of chapter 4 of the *Agilent 8920B Programmer’s Guide*).

***SAV (Save Instrument State)**

The *SAV command saves the present state of the Test Set into a file in battery-backed internal memory, on a memory card, on a RAM disk, or on an external disk. The *SAV command is followed by a decimal number in the range of 0 to 99 which indicates the name of the stored SAVE/RECALL file. The mass storage location for SAVE/RECALL files is selected using the **SAVE/RECALL** field on the I/O CONFIGURE screen.

The *SAV command cannot be used to save the present state of the Test Set to a file with a name which contains non-numeric characters or a decimal number greater than 99. To save the present state of the Test Set to a file with a name which contains non-numeric characters or a decimal number greater than 99, use the REG:SAVE filename command (see SAVE in the “Equivalent Front-Panel Key Commands” section of chapter 4 of the *Agilent 8920B Programmer’s Guide*).

ManualsPlus.com

Common Command Descriptions

*IDN? (Identification Query)

The *IDN? query causes a device to send its identification information over the bus. The Test Set responds to the *IDN? command by placing its identification information, in ASCII format, into the Output Queue. The response data is obtained by reading the Output Queue into a string variable of length 72. The response data is organized into four fields separated by commas. The field definitions are described in **Table 17**.

Table 17 **Device Identification**

Field	Contents	Typical Response from Test Set	Comments
1	Manufacturer	Agilent Technologies	
2	Model	Agilent 8920B	Depends upon Model of Test Set
3	Serial Number	US12345678	ASCII character “0”, decimal value 48, if not available
4	Firmware Revision Level	B.01.08	ASCII character “0”, decimal value 48,if not available

ManualsPlus.com

NOTE: The Serial Number format can take one of two forms:

AAXXXXXXXX
or
XXXXAXXXXX

A = alpha character
X = numeric character

The form returned will depend upon the manufacturing date of the Test Set being queried.

Example BASIC program

```
10 DIM A$[10]20 OUTPUT 714;"*IDN?"
30 ENTER 714;A$
40 PRINT A$
50 END
```

Example response

```
Agilent Technologies,8920B,US33471280,B.01.09
```

ManualsPlus.com

*OPT? (Option Identification Query)

The *OPT? command tells the Test Set to identify any reportable device options install in the unit. The Test Set responds to the *OPT? command by placing information which describes any reportable installed options into the Output Queue. The data is in ASCII format. The response data is obtained by reading the Output Queue into a string variable of length 255. The response data is organized into fields separated by commas. Some fields, such as the Filter Option field, have more than one valid string (only one is returned).

If an option is not installed, an ASCII character 0 (zero) is placed in the output string for that option. If an option is standard, it is not reported (an ASCII character 0 (zero) is not placed in the output string for that option). The length of the returned string can vary depending upon the Test Set being queried, installed options and standard options. The option definitions and their returned string are shown in **Table 18**.

Example BASIC program

```
10 DIM A$[255]20 OUTPUT 714;"*OPT?"
30 ENTER 714;A$
40 PRINT A$
50 END
```

Example response from Agilent 8920B with Opt. 006 and Agilent 83201B Opt. 003 TDMA Cellular Adapter

SIGNALING,SPECTRUM ANALYZER,RADIO INTERFACE,
HIGH STABILITY REF,C MESSAGE,6KHZ BPF,6 DB RF ATTEN,IQ MODEM,0,
0,0,0,0,0

ManualsPlus.com

Table 18 Option Identification

Agilent 8920B	Option	Returned String
OPT	004 Tone/Digital Signaling	SIGNALING
OPT	102 Spectrum Analyzer with Tracking Generator and ACP	SPECTRUM ANALYZER
OPT	020 Radio Interface Card	RADIO INTERFACE
OPT	001 High Stability Timebase 101 High Stability Timebase	HIGH STABILITY REF
OPT	Filter Option #1: 010 400 Hz High Pass Filter 011 CCITT Weighting Filter 012 4 kHz Bandpass Filter 013 C-Message Weighting Filter 014 6 kHz Bandpass Filter H30 2 Hz Low Pass Filter Special Customized Filter No filter installed	 400HZ HPF CCITT 4KHZ BPF C MESSAGE 6KHZ BPF 2HZ LPF SPECIAL NO FILTER
OPT	Filter Option #2: 010 400 Hz High Pass Filter 011 CCITT Weighting Filter 012 4 kHz Bandpass Filter 013 C-Message Weighting Filter 014 6 kHz Bandpass Filter H30 2 Hz Low Pass Filter Special Customized Filter No filter installed	 400HZ HPF CCITT 4KHZ BPF C MESSAGE 6KHZ BPF 2HZ LPF SPECIAL NO FILTER

ManualsPlus.com

Table 18 Option Identification (Continued)

Agilent 8920B	Option	Returned String
OPT	006 10 Watt to 50 microWatt Power Measurement Range	6 DB RF ATTEN
OPT	007 Low-level RF Power Measurements	LOW POWER RF ATTEN
OPT	016 High Level RF Power Measurements to 100 Watts Continuous	16 DB RF ATTEN
OPT	H08 High Level RF Power Measurements to 100 Watts Continuous	16 DB RF ATTEN
OPT OPT	Agilent 83201A Dual Mode Cellular Adapter or Agilent 83201B Opt. 003 TDMA Cellular Adapter	IQ MODEM
OPT	Agilent 83201B Opt. 001 or Opt. 004	PDC
OPT	Agilent 83201B Opt. 002 or Opt. 004	PHP
OPT	Agilent 83206a TDMA Cellular Adapter	DCCH.001

ManualsPlus.com

*RST (Reset)

The *RST command resets the Test Set. When the *RST command is received the majority of fields in the Test Set are “restored” to a default value, some fields are “maintained” at their current state and some are “initialized” to a known state. Refer to **“Instrument Initialization” on page 339** for further information. Other operational characteristics are also affected by the *RST command as follows:

- All pending operations are aborted.
- The Test Set’s display screen is in the UNLOCKED state.
- Measurement triggering is set to TRIG:MODE:SETT FULL;RETR REP.
- Any previously received Operation Complete command (*OPC) is cleared.
- Any previously received Operation Complete query command (*OPC?) is cleared.
- The power-up self-test diagnostics are not performed.
- The contents of the SAVE/RECALL registers are not affected.
- Calibration data is not affected.
- The GPIB interface is not reset (any pending Service Request is not cleared).
- All Enable registers are unaffected: Service Request, Standard Event, Communicate, Hardware #1, Hardware #2, Operation, Calibration, and Questionable Data/Signal.
- All Negative Transition Filter registers are unaffected: Communicate, Hardware #1, Hardware #2, Operational, Calibration, and Questionable Data/Signal.
- All Positive Transition Filter registers are unaffected: Communicate, Hardware #1, Hardware #2, Operational, Calibration, and Questionable Data/Signal.
- The contents of the RAM memory are unaffected.
- The contents of the Output Queue are unaffected.
- The contents of the Error Queue are unaffected.

ManualsPlus.com

*TST? (Self-Test Query)

The *TST? self-test query causes the Test Set to execute a series of internal self-tests and place a numeric response into the Output Queue indicating whether or not the Test Set completed the self-test without any detected errors. The response data is obtained by reading the Output Queue into a numeric variable, real or integer. Upon successful completion of the self-test the Test Set settings are restored to their values prior to receipt of the *TST? command. The numeric response definition is as shown in **Table 19**.

Table 19 Self-Test Response

Detected Error	Returned Error Code (Decimal)	Error Code Displayed on Test Set's CRT (Hexadecimal)
None (all self-tests passed)	0	0000
68000 Processor Failure	2	0002
ROM Checksum Failure	4	0004
Standard Non-Volatile System RAM Failure	8	0008
Non-Volatile System RAM Failure	16	0010
6840 Timer Chip Failure	32	0020
Real-time Clock Chip Failure	64	0040
Keyboard Failure (stuck key)	128	0080
RS-232 Chip (I/O option installed and not functioning correctly)	256	0010
Serial Bus Communications Failure with a Standard Board	512	0200
Signaling Board Self-Test Failure	1024	0400
CRT Controller Self-Test Failure	2048	0800
Miscellaneous Hardware Failure	4096	1000

ManualsPlus.com

NOTE: Refer to the Test Set's Assemlby Level Repair manual for further informaton on Power-Up Self Test Failure.

Example BASIC program

```
10 INTEGER Slf_tst_respons20 OUTPUT 714;"*TST?"
30 ENTER 714;Slf_tst_respons
40 PRINT Slf_tst_respons$
50 END
```

Example response

512

ManualsPlus.com

*OPC (Operation Complete)

The *OPC command allows for synchronization between the Test Set and an external controller. The *OPC command causes the Test Set to set bit 0, Operation Complete, in the Standard Event Status Register to the TRUE, logic 1, state when the Test Set completes all pending operations. Detection of the Operation Complete message can be accomplished by continuous polling of the Standard Event Status Register using the *ESR? common query command. However, using a service request eliminates the need to poll the Standard Event Status Register thereby freeing the controller to do other useful work.

NOTE: The Test Set contains signal generation and signal measurement instrumentation. The instrument control processor is able to query the signal measurement instrumentation to determine if a measurement cycle has completed. However, the instrument control processor is not able to query the signal generation instrumentation to determine if the signal(s) have settled. In order to ensure that all signals have settled to proper values, the instrument control processor initiates a one-second delay upon receipt of the *OPC, *OPC? and *WAI commands. In parallel with the one-second timer the instrument control processor commands all active measurements to tell it when the measurement(s) are done. When all active measurements are done and the one-second timer has elapsed, the *OPC, *OPC? and *WAI commands are satisfied.

If the *OPC, *OPC? or *WAI common commands are used to determine when a measurement has completed and the measurement is either in the OFF State or unavailable (four dashed lines on CRT display “- - - -”), the *OPC, *OPC? or *WAI command will never complete.

CAUTION: The *OPC command should not be used for determining if a Call Processing Subsystem state command has completed successfully. Call Processing Subsystem states do not complete, a state is either active or not active. Using the *OPC command with a Call Processing Subsystem state command results in a deadlock condition. The control program will continuously query the Standard Event Status Register for the Operation Complete bit to be set but the bit will never be set because the command never ‘completes’.

For example, the following command sequence should not be used:

```
OUTPUT 714;"CALLP:ACTive;*OPC"
```

The *OPC command should not be used with any of the following Call Processing Subsystem commands: :ACTive, :REGister, :PAGE, :HANDoff, :RELease.

The Call Processing Subsystem Status Register Group should be used to control program flow. Refer to **Chapter 8, “Programming the Call Processing Subsystem,”** for information on controlling program flow using the Call Processing Subsystem Status Register Group.

ManualsPlus.com

Example BASIC program - Service Request

```
10  OUTPUT 714;"*SRE 32"
20 !Enable SRQ on events in the Standard Event Status Register
30  OUTPUT 714;"*ESE 1"
40 !Enable Operation Complete bit in Standard Event Status Register
50  ON INTR 7,15 CALL Srvice_interupt   !Set up interrupt
60  ENABLE INTR 7;2                     !Enable SRQ interrupts
70  OUTPUT  714;"DISP  RFG;RFG:OUTP  'Dupl';AMPL  0  dBm;FREQ  320
MHz;*OPC"
80  LOOP                                !Dummy loop to do nothing
90  DISP "I am in a dummy loop."
100 END LOOP
110 END
120 SUB Srvice_interupt
130 PRINT "All operations complete."
140 ! Note:
150 ! This interrupt service routine is not complete.
160 ! Refer to the "GPIB Service Requests" on page 329 for
170 ! complete information.
180 SUBEND
```

The program enables bit 0 in the Standard Event Status Enable Register and also bit 5 in the Service Request Enable Register so that the Test Set will request service whenever the OPC event bit becomes true. After the service request is detected the program can take appropriate action. Refer to **"GPIB Service Requests" on page 329** for further information.

Example BASIC program - Polling the Standard Event Status Register

```
10 INTEGER Stdevnt_reg_val
20  OUTPUT  714;"DISP  RFG;RFG:OUTP  'Dupl';AMPL  0  dBm;FREQ  320
MHz;*OPC"
30 LOOP
40 OUTPUT 714;"*ESR?"             ! Poll the register
50 ENTER 714;Stdevnt_reg_val
60 EXIT IF BIT(Stdevnt_reg_val,0) ! Exit if Operation Complete bit
set
70 END LOOP
80 PRINT "All operations complete."
90 END
```

ManualsPlus.com

*OPC? (Operation Complete Query)

The *OPC? query allows for synchronization between the Test Set and an external controller by reading the Output Queue or by polling the Message Available (MAV) bit in the Status Byte Register. The *OPC? query causes the Test Set to place an ASCII character, 1, into its Output Queue when the Test Set completes all pending operations. A consequence of this action is that the MAV bit in the Status Byte Register is set to the 1 state.

NOTE:

The Test Set contains signal generation and signal measurement instrumentation. The instrument control processor is able to query the signal measurement instrumentation to determine if a measurement cycle has completed. However, the instrument control processor is not able to query the signal generation instrumentation to determine if the signal(s) have settled. In order to ensure that all signals have settled to proper values, the instrument control processor initiates a one-second delay upon receipt of the *OPC, *OPC? and *WAI commands. In parallel with the one-second timer the instrument control processor commands all active measurements to tell it when the measurement(s) are done. When all active measurements are done and the one-second timer has elapsed, the *OPC, *OPC? and *WAI commands are satisfied.

If the *OPC, *OPC? or *WAI common commands are used to determine when a measurement has completed and the measurement is either in the OFF State or unavailable (four dashed lines on CRT display “- - - -”), the *OPC, *OPC? or *WAI command will never complete.

CAUTION:

The *OPC? command should not be used for determining if a Call Processing Subsystem state command has completed successfully. Call Processing Subsystem states do not complete, a state is either active or not active. Using the *OPC? command with a Call Processing Subsystem state command results in a deadlock condition. The control program will continuously query the Output Queue for a 1 but the 1 will never be placed in the Output Queue because the command never ‘completes’.

For example, the following command sequence should not be used:

```
OUTPUT 714;"CALLP:ACTive;*OPC?"
```

The *OPC? command should not be used with any of the following Call Processing Subsystem commands: :ACTive, :REGister, :PAGE, :HANDoff, :RELease.

The Call Processing Subsystem Status Register Group should be used to control program flow. Refer to **Chapter 8, “Programming the Call Processing Subsystem,”** for information on controlling program flow using the Call Processing Subsystem Status Register Group.

ManualsPlus.com

Using the *OPC? query by reading Output Queue

Bit 4 in the Service Request Enable Register is set to a value of zero (disabled). The *OPC? query is sent to the Test Set at the end of a command message data stream. The application program then attempts to read the *OPC? query response from the Test Set's Output Queue. The Test Set will not put a response to the *OPC? query into the Output Queue until the commands have all finished.

NOTE: Reading the response to the *OPC? query has the penalty that both the GPIB bus and the Active Controller handshake are in temporary holdoff state while the Active Controller waits to read the *OPC? query response from the Test Set.

Example BASIC program

```
10 INTEGER Output_que_val
20 OUTPUT 714;"*SRE 0"! Disable Service Requests
30  OUTPUT  714;"DISP  RFG;RFG:OUTP  'Dupl';AMPL  0  dBm;FREQ  320
MHz;*OPC?"
40 ENTER 714;Output_que_val
50 !Program will wait here until all operations complete
60 PRINT "All operations complete."
70 END
```

Using the *OPC? query using the MAV bit in the Status Byte

Bit 4 in the Service Request Enable Register is set to a value of 1 (enabled). The *OPC? query is sent to the Test Set at the end of a command message data stream. The Test Set will request service when the MAV bit in the Status Byte register is set to the TRUE, logic 1, state. After the service request is detected the application program can take appropriate action. Refer to the **"GPIB Service Requests" on page 329** for further information.

ManualsPlus.com

Example BASIC program

```
10 OUTPUT 714;"*SRE 16"
20 !Enable SRQ on data available in Output Queue (MAV bit)
30 ON INTR 7,15 CALL Srvice_interupt  ! Set up interrupt
40 ENABLE INTR 7;2                    ! Enable SRQ interrupts
50 OUTPUT 714;"DISP RFG;RFG:OUTP 'Dupl';AMPL 0 dBm;FREQ 320
MHz;*OPC?"
60 LOOP   ! Dummy loop to do nothing
70 DISP "I am in a dummy loop."
80 END LOOP
90 END
100 SUB Srvice_interupt
110 ENTER 714;Output_que_val!Read the 1 returned by the *OPC?
120 ! query command
130 PRINT "All operations complete."
140 ! Note:
150 ! This interrupt service routine is not complete.
160 ! Refer to the "GPIB Service Requests" on page 329 for
170 ! complete information.
180 SUBEND
```

ManualsPlus.com

*WAI (Wait To Complete)

The *WAI command stops the Test Set from executing any further commands or queries until all commands or queries preceding the *WAI command have completed.

Example BASIC statement

```
OUTPUT 714;"DISP RFG;RFG:OUTP 'Dupl';*WAI;AMPL 0 dBm"
```

NOTE: The Test Set contains signal generation and signal measurement instrumentation. The instrument control processor is able to query the signal measurement instrumentation to determine if a measurement cycle has completed. However, the instrument control processor is not able to query the signal generation instrumentation to determine if the signal(s) have settled. In order to ensure that all signals have settled to proper values, the instrument control processor initiates a one-second delay upon receipt of the *OPC, *OPC? and *WAI commands. In parallel with the one-second timer the instrument control processor commands all active measurements to tell it when the measurement(s) are done. When all active measurements are done and the one-second timer has elapsed, the *OPC, *OPC? and *WAI commands are satisfied.

If the *OPC, *OPC? or *WAI common commands are used to determine when a measurement has completed and the measurement is either in the OFF State or unavailable (four dashed lines on CRT display “- - - -”), the *OPC, *OPC? or *WAI command will never complete.

CAUTION: The *WAI command should not be used for determining if a Call Processing Subsystem state command has completed successfully. Call Processing Subsystem states do not complete, a state is either active or not active. Using the *WAI command with a Call Processing Subsystem state command results in a deadlock condition. The Test Set will not process any further GPIB commands unitl the Call Processing Subsystem command preceeding the *WAI command completes but the command never ‘completes’.

For example, the following command sequence should not be used:

```
OUTPUT 714;"CALLP:ACTive;*WAI;:CALLP:REGister"
```

The *WAI command should not be used with any of the following Call Processing Subsystem commands: :ACTive, :REGister, :PAGE, :HANDoff, :RELease.

The Call Processing Subsystem Status Register Group should be used to control program flow. Refer to **Chapter 8, “Programming the Call Processing Subsystem,”** for information on controlling program flow using the Call Processing Subsystem Status Register Group.

ManualsPlus.com

*CLS (Clear Status)

The *CLS command clears the contents (sets all bits to zero) of all Event Registers summarized in the Status Byte. The *CLS command also empties all queues (removes all current messages) which are summarized in the Status Byte, except the Output Queue. The Status Byte Register is cleared and any pending service request is cleared. The following Event Registers are affected:

Hardware 1 Status Register
Hardware 2 Status Register
Questionable Data/Signal Register
Standard Event Status Register
Operational Status Register
Calibration Status Register
Communicate Status Register
Call Processing Status Register

The Following message queues are affected:

Error Message Queue

NOTE: The *CLS command does not clear the contents of the Message Screen which is displayed on the CRT when the SHIFT RX keys are selected. This display is only cleared when the unit is powered on.

*ESE (Standard Event Status Enable)

The Test Set responds to the *ESE command. See **"Status Reporting" on page 275** for a detailed explanation of the *ESE command.

*ESE? (Standard Event Status Enable Query)

The Test Set responds to the *ESE? command. See **"Status Reporting" on page 275** for a detailed explanation of the *ESE? command.

*ESR? (Standard Event Status Register Query)

The Test Set responds to the *ESR? command. See **"Status Reporting" on page 275** for a detailed explanation of the *ESR? command.

ManualsPlus.com

*SRE (Service Request Enable)

The Test Set responds to the *SRE command. **"GPIB Service Requests" on page 329** for a detailed explanation of the *SRE command.

*SRE? (Service Request Enable Query)

The Test Set responds to the *SRE? command. **"GPIB Service Requests" on page 329** for a detailed explanation of the *SRE? command.

*STB? (Status Byte Query)

The Test Set responds to the *STB? command. **"Status Reporting" on page 275** for a detailed explanation of the *STB? command.

*TRG (Trigger)

The *TRG command is equivalent to the IEEE 488.1 defined Group Execute Trigger (GET) message and has the same effect as a GET when received by the Test Set. The Test Set responds to the *TRG command by triggering all currently active measurements.

*PCB (Pass Control Back)

The Test Set accepts the *PCB command. **"Passing Control" on page 349** for a detailed explanation of the *PCB command.

*RCL (Recall Instrument State)

The *RCL command restores the state of the Test Set from a file previously stored in battery-backed internal memory, on a memory card, on a RAM disk, or on an external disk. The *RCL command is followed by a decimal number in the range of 0 to 99 which indicates which Test Set SAVE/RECALL file to recall. The mass storage location for SAVE/RECALL files is selected using the **SAVE/RECALL** field on the I/O CONFIGURE screen.

The *RCL command cannot be used to recall files with names which contain non-numeric characters or a decimal number greater than 99. To recall SAVE/RECALL files saved with names which contain non-numeric characters or a decimal number greater than 99, use the REG:RECall filename command. (See "RECALL" on page 220.)

ManualsPlus.com

*SAV (Save Instrument State)

The *SAV command saves the present state of the Test Set into a file in battery-backed internal memory, on a memory card, on a RAM disk, or on an external disk. The *SAV command is followed by a decimal number in the range of 0 to 99 which indicates the name of the stored SAVE/RECALL file. The mass storage location for SAVE/RECALL files is selected using the **SAVE/RECALL** field on the I/O CONFIGURE screen.

The *SAV command cannot be used to save the present state of the Test Set to a file with a name which contains non-numeric characters or a decimal number greater than 99. To save the present state of the Test Set to a file with a name which contains non-numeric characters or a decimal number greater than 99, use the REG:SAVE filename command. (See “SAVE” on page 220.

ManualsPlus.com

Triggering Measurements

The measurement cycle is started (triggered) by the occurrence of a trigger event. The reliability and accuracy of the measurement result, as well as the speed of the measurement cycle are influenced by the trigger mode in effect at the time the trigger event occurs. Some modes are faster than others; some modes provide settling for signals that may contain transients. The best triggering mode to use will depend upon the measurement requirements (repeatability, accuracy and speed).

Trigger Event

The Test Set starts a measurement cycle when a valid Trigger Event is received. A Trigger Event is analogous to telling the Test Set to “start the measurement now.” There are three commands that can be used to issue a Trigger Event to the Test Set through GPIB:

- A Group Execute Trigger Command (GET) as defined by IEEE 488.1-1987
- A Trigger Common Command (*TRG) as defined by IEEE 488.2-1987
- A :TRIGger:IMMediate Test Set command.

All three commands are equivalent and have the same effect when received by the Test Set. The Test Set responds to the three commands by triggering *all* currently active measurements. A measurement is defined as *active* if

1. it is on the currently displayed screen
2. it is in the ON state

From a programming perspective this means that the screen which contains the measurement of interest must be made available using the DISPlay command and that the measurement STATe must be ON.

ManualsPlus.com

Trigger Modes

The Trigger Mode is defined by two parameters: retriggering and settling.

Retriggering

Retriggering refers to what a measurement does once it has completed a measurement cycle. There are two options:

1. **Single** retriggering causes the measurement cycle to stop once a valid measurement result has been obtained. A valid trigger command must be received to start the measurement again. When a measurement cycle is completed, the values for all active measurements are held until another trigger command is received. This allows the control program to query a group of measurements that were triggered at the same time. This is the same functionality as the front-panel HOLD function.

   When the trigger mode is set to single retriggering, consecutive queries of the same measurement (with no intervening trigger event) will return the same value. Measurements that rely on external signals or hardware-generated events (such as the DTMF Decoder) must be re-armed with a new trigger command before another measurement can be made.

2. **Repetitive** retriggering causes the measurement cycle to immediately start over once a valid measurement result has been obtained. No trigger event must be received to start the measurement again. Repetitive retriggering will cause measurements that rely on external signals or hardware generated events (such as the DTMF Decoder) to be re-armed upon completion of a measurement cycle (a valid measurement result has been obtained). When the trigger mode is set to repetitive retriggering, consecutive queries of the same measurement return new measured values.

NOTE: If a measurement cycle does not successfully obtain a valid measurement result, it will continue to try until it does or the measurement trigger is aborted. This is true for both retriggering modes.

ManualsPlus.com

Settling

Settling refers to the amount of delay introduced to allow signal transients to propagate through the analysis chain and settle out. There are two options:

1. **Full** settling introduces the appropriate delay for all signal transients which might have occurred at the front panel at just the same time as the trigger event, to pass through the analysis chain and settle out. Delays are also inserted to allow for internal hardware transients to settle.
2. **Fast** settling introduces no delay for internal or external signal transients to settle. The programmer must account for transient settling before issuing the Trigger Event.

NOTE: There will still be delays introduced by the couplings between autotuning and autoranging. If the programmer wishes to remove these delays as well, all autoranging and autotuning functions must be turned OFF and the program must explicitly set the ranging amplifiers and the frequency tuning. Delays introduced by the measurement processes themselves cannot be eliminated.

Bus Lock Up: If a measurement cycle does not successfully obtain a valid measurement result, it will continue to try until it does or until the measurement trigger is aborted. This is true for both retriggering modes. This has the consequence that both the GPIB bus and the Active Controller handshake are in a temporary holdoff state while the Active Controller waits to read the measurement result from the Test Set.

The control program should include measurement time-out routines that CLEAR the bus and ABORt the trigger if a measurement does not complete within a specified amount of time. This provides a method of preventing the bus from remaining in the temporary holdoff state indefinitely.

ManualsPlus.com

Default Trigger Mode

The Trigger mode is set to FULL SETTling and REPetitive RETRiggering whenever

- the Test Set is powered on
- the PRESET key is selected
- the Test Set is put into LOCAL mode
- the Test Set is reset using the *RST command
- the Test Set is put in remote mode and no other trigger mode is set

Local/Remote Triggering Changes

Local To Remote Transitions

The Test Set switches from Local to Remote mode upon receipt of the Remote message (REN bus line true and Test Set is addressed to listen). No instrument settings are changed by the transition from Local to Remote mode, but triggering is set to the state it was last set to in Remote mode (if no previous setting, the default is FULL SETTling and REPetitive RETRiggering).

When the Test Set makes a transition from local to remote mode, all currently active measurements are flagged as invalid causing any currently available measurement results to become unavailable. If the GPIB trigger mode is :RETR REP then a new measurement cycle is started and measurement results will be available for all active measurements when valid results have been obtained. If the GPIB trigger mode is :RETR SING then a measurement cycle must be started by issuing a trigger event. Refer to **“Triggering Measurements” on page 258** for more information.

Remote To Local Transitions

The Test Set switches from Remote to Local mode upon receipt of the Local message (Go To Local bus message is sent and Test Set is addressed to listen) or receipt of the Clear Lockout/Set Local message (REN bus line false). No instrument settings are changed by the transition from Remote to Local mode, but triggering is reset to FULL SETTling and REPetitive RETRiggering.

ManualsPlus.com

Trigger Commands

:TRIGger:IMMediate

The :TRIGger:IMMediate command tells the Test Set to “start a measurement cycle now.” The type of triggering used depends on the trigger mode settings. This command is equivalent to a Group Execute Trigger Command (GET) as defined by IEEE 488.1-1987 or a Trigger Common Command (*TRG) as defined by IEEE 488.2-1987. The IMMediate statement is implied and is optional.

Syntax

```
:TRIGger:IMMediate
```

Example

```
OUTPUT 714;"TRIG:IMM"
```

or

```
OUTPUT 714;"TRIG"
```

:ABORt

The :ABORt command tells the Test Set to stop a currently executing measurement cycle and get ready for a new GPIB command. If for any reason a valid measurement cannot be made, this command allows the control program to terminate the requested measurement and regain control of the Test Set.

Syntax

```
:TRIGger:ABORt
```

Example

```
OUTPUT 714;"TRIG:ABOR"
```

ManualsPlus.com

:MODE

The :MODE command is used to set the Trigger Mode for all active measurements. The trigger mode is defined by two parameters: retriggering and settling.

Retriggering Syntax

```
:TRIGger:MODE:RETRigger REPetitive
:TRIGger:MODE:RETRigger SINGle
```

Retriggering Examples

```
OUTPUT 714;"TRIG:MODE:RETR REP"
OUTPUT 714;"TRIG:MODE:RETR SING"
```

Settling Syntax

```
:TRIGger:MODE:SETTling FAST
:TRIGger:MODE:SETTling FULL
```

Settling Examples

```
OUTPUT 714;"TRIG:MODE:SETT FAST"
OUTPUT 714;"TRIG:MODE:SETT FULL"
```

ManualsPlus.com

Trigger Mode and Measurement Speed

There are two generalized scenarios which can be described for GPIB triggering control. The first is to have the Test Set return measurement results as fast as possible and assume that the control program will handle all transient settling and value tolerance activities. The second scenario is to have the Test Set return the most reliable, accurate, fully settled measurement results that it can, even if it takes some time to do this.

Trigger Mode Settings for Fastest Measurements

Use the following Test Set configuration and trigger mode settings for the fastest possible measurement speed. See **"Increasing Measurement Throughput" on page 268** for more information on improving measurement throughput.

1. Range hold all auto-ranging and auto-tuning functions and set ranges and frequency through GPIB. This avoids autoranging/autotuning delays.
2. Use REPetitive RETRiggering. This avoids Trigger Event processing delays.
3. Use FAST SETTling. This avoids the signal transient settling delays.[1]
4. Turn off all measurements that are not required. This avoids any delays caused by contention for measurement resources within the Test Set.

Trigger Mode Settings for Most Reliable Measurements

Use the following Test Set configuration and trigger mode settings to get the most accurate, most reliable, fully settled measurement results. See **"Increasing Measurement Throughput" on page 268** for more information on improving measurement throughput.

1. Turn on all autoranging and autotuning functions. (This is the Test Set's default turn-on and PRESET state.)
2. Use SINGle RETRiggering.
3. Use FULL SETTling.
4. Individually trigger each measurement.

1. Using FAST settling increases the possibility that transient signal conditions which occur during the measurement cycle will be included in the measurement result.

ManualsPlus.com

Measurement Pacing

Measurement pacing can be accomplished by using the IEEE 488.2-1987 Common Commands *OPC, *OPC?, and *WAI. These commands are implemented within the Test Set using the criteria that an operation has not completed until

- all active measurements have obtained at least one valid measurement result
- all signals generated by the Test Set are within specifications.

Refer to the **"Common Command Descriptions" on page 241** and the IEEE 488.2-1987 Standard for more information on using these commands.

Arming Hardware-Triggered Measurements

Some measurements, such as the Tone Sequence Decoder, require an external signal to trigger the measurement. These measurements require that the measurement be "armed" in order for it to be triggered by the external signal. The :TRIGger:IMMediate command is used to arm these types of measurements within the Test Set.

When the trigger mode is set to RETRigger SINGle, the measurement must be re-armed after each measurement cycle.

When the trigger mode is set to RETRigger REPetitive, the measurement is continually re-armed after each measurement cycle.

NOTE: **Bus Lock Up:** If the required triggering signal is not received, or if the signal level is incorrect, the measurement will not trigger and the measurement cycle will not complete. If a measurement cycle does not successfully obtain a valid measurement result, it will continue to try until it does (an external trigger is detected) or until the measurement trigger is aborted. This is true for both retriggering modes. This has the consequence that both the GPIB bus and the Active Controller handshake are in a temporary holdoff state while the Active Controller waits to read the measurement result from the Test Set.

The control program should include measurement time-out routines that CLEAR the bus and ABORt the trigger if a measurement does not complete within a specified amount of time. This provides a method of preventing the bus from remaining in the temporary holdoff state indefinitely.

ManualsPlus.com

ManualsPlus.com

5

Advanced Operations

ManualsPlus.com

Increasing Measurement Throughput

Measurement throughput is defined as the number of measurements made per unit of time. When operating the Test Set in the Internal or External Automatic Control Mode, measurement throughput is influenced by measurement speed, measurement setup time, and execution speed of the control program. Each of these factors is, in turn, influenced by several parameters. The following sections discuss the parameters and their effect on measurement throughput.

Optimizing Measurement Speed

Measurement speed is defined as the time required to complete one measurement cycle after receipt of a valid trigger event. Measurement speed is influenced by the following four parameters.

1. Trigger Mode

The Trigger Mode affects the time-to-first-reading and the length of the measurement cycle and is defined by two parameters: retriggering and settling. Retriggering refers to what a measurement does once it has completed a measurement cycle. Settling refers to the amount of delay introduced to allow signal transients to propagate through the analysis chain and settle out. Refer to **"Triggering Measurements" on page 258** for information on Trigger Mode and its impact on measurement speed.

2. Autoranging/Autotuning

The autoranging and autotuning functions continuously calculate and adjust gain and frequency tuning settings to provide the optimum instrument setup for each measurement. This results in greater measurement accuracy but increases measurement cycle time. The autoranging and autotuning functions can be turned off to decrease the measurement cycle time.

ManualsPlus.com

Time-to-first-reading after making new settings is usually much slower than the repetitive reading rate once the first reading has been returned. The main contributor to first-reading measurement time is hardware autoranging. Hardware autoranging time can be eliminated by first establishing the expected AF and RF signal levels into the Test Set. With these signal levels present, the Test Set will autorange, allowing the operator to determine the attenuation and gain settings of the RF input attenuator as displayed in the RF ANALYZER screen, and to determine the various IF and audio gains as displayed in the AF ANALYZER screen. The attenuation and gain settings determined in manual mode should be recorded for use in writing the program.

In the control program, select Gain Control, Hold (default is Auto), and make the settings recorded in manual mode. When the control program runs, the signal levels into the Test Set need to remain relatively constant since autoranging has been disabled.

If the automatic functions are turned off, the control program must set the gain stages and frequency tuning before triggering a measurement. The automatic functions can be turned off as follows:

Disable RF autotuning by setting the **`Tune Mode`** field to **`Manual`** using the following command:

:RFAN:TMOD 'MANUAL'

Disable RF autoranging by setting the **`Input Atten`** field to **`Hold`** using the following command:

:RFAN:ATT:MODE 'HOLD'

Disable AF autoranging by setting the **`Gain Cntl`** field to **`Hold`** using the following command:

:AFAN:RANG 'HOLD'

ManualsPlus.com

3. Frequency Counter Gate Time

The frequency counter's gate time specifies how long the RF or AF frequency counter samples the signal before displaying the measured result. Short gate times measure instantaneous frequency and long gate times measure average frequency. The longer the gate time, the longer the measurement cycle. The proper gate time is determined by the measurement requirements. Use the following commands to set gate times:

For AF frequency measurements, set the AF Analyzer's gate time with the **`AF Cnt Gate`** field, using the following command:

:AFAN:GTIM <value> MS

For RF frequency measurements, set the RF Analyzer's gate time with the **`RF Cnt Gate`** field, using the following command:

:RFAN:GTIM <value> MS

4. Number of Active Measurements

The Test Set is capable of making many measurements simultaneously. Measurements are either in the active state (ON) or in the inactive state (OFF). When the Test Set receives a trigger event, all active measurements are triggered. A measurement cycle is complete when all active measurements have obtained a valid measurement result. To decrease the measurement cycle time, all unused measurements should be set to the inactive state (turned OFF). Turning OFF unused measurements will have the greatest impact on reading repetition rate. Use the STATe command to turn OFF all unneeded measurements on the displayed screen.

Optimizing Measurement Setup Time

Measurement setup time is defined as the time required to configure an individual instrument within the Test Set to make a measurement.

In general there are two methodologies which can be used to setup individual instruments in the Test Set:

1. Set up every field every time a measurement is made.,
2. Define a base instrument state and then modify it as needed for each measurement (always returning to the base state after finishing the measurement).

Defining a base instrument state requires fewer GPIB transactions to set up an instrument (in the majority of cases) which in turn reduces measurement setup time.

ManualsPlus.com

Optimizing the Execution Speed of the Control Program

Execution speed of the control program is defined as the time required to execute a given number of program lines. .

Each time the GPIB is accessed, a given amount of time is required to configure the devices on the bus for data transfer. Every time a BASIC or IBASIC OUTPUT or ENTER statement is executed this bus configuration time is incurred. The total amount of bus configuration time expended for a given number of program lines can be minimized by reducing the number of OUTPUT and ENTER statements used in the control program. This is accomplished by combining several commands into one GPIB transaction. Execution speed of the control program is influenced by the use of compound commands and screen display time as described in the following paragraphs

Compound Commands for Combining OUTPUT Statements

To reduce the number of OUTPUT statements used to make the desired settings within one screen, string together multiple settings within one OUTPUT statement. This is accomplished using the ; (semicolon) separator and the ;: (semicolon colon) separator.

The ; (semicolon) Separator. The **;** (semicolon) separator tells the Test Set's GPIB command parser to back up *one* level of command hierarchy and accept the next command at the same level as the previous command. The following examples illustrate proper use of the semicolon separator:

Example #1

```
OUTPUT 714;"RFG:AMPL -66 DBM;FREQ 500 MHZ;AMPL:STAT ON"
```

!This OUTPUT statement sets the RF generator's amplitude, frequency, and output state.

Example #2

```
OUTPUT 714;"RFG:MOD:EXT:DEST 'FM (/Vpk)':FM 12.5 KHZ;FM:STAT
ON"
```

!This OUTPUT statement configures the RF generator to accept external modulation from the rear-panel input, sets the amount of deviation, and turns FM on.

ManualsPlus.com

Example #3

```
OUTPUT 714;"ENC:AMPS:SAT:FM 2.35 KHZ;FREQ 5.970 KHZ"
```

!This OUTPUT statement sets the AMPS SAT tone's frequency and deviation.

The semicolon separator tells the Test Set's GPIB command parser to back up only *one* level of command hierarchy. The following OUTPUT statement illustrates *improper* use of the semicolon separator.

```
OUTPUT 714;"RFG:MOD:EXT:DEST 'FM (/Vpk)';AOUT 'DC'"
```

Trying to execute this OUTPUT statement would cause **`HP-IB Error:-113 Undefined header`**. This is because the AOUT command is two levels higher than the DEST 'FM (/Vpk)' command. Refer to the syntax diagram, **"RF Generator" on page 181** for the command hierarchy.

The ;: (semicolon-colon) Separator. The **;:** (semicolon-colon) separator tells the Test Set's GPIB command parser that the next command is at the top level of the command hierarchy. This allows commands from different instruments to be output on one command line. The following example illustrates proper use of the semicolon-colon separator:

Example

```
OUTPUT 714;"RFAN:FREQ 850 MHZ;:AFAN:INP 'FM DEMOD'"
```

This OUTPUT statement sets the RF Analyzer's tune frequency to 850 MHz, and then sets the AF Analyzer's input to FM Demod.

Compound Commands for Combining ENTER Statements

To reduce the number of ENTER statements used to read measured values within one screen, string together multiple measure commands within one OUTPUT statement followed by an ENTER statement with the appropriate number of variables to hold the measured values. The following example illustrates this technique.

Example

```
OUTPUT 714;"MEAS:RFR:POW?;FREQ:ABS?"
ENTER 714;Power,Freq_abs
```

This OUTPUT statement requests an RF power and an absolute RF frequency measurement. The ENTER statement then reads both values into program variables.

ManualsPlus.com

Screen Display Time

Each time the screen being displayed on the Test Set (active screen) is changed, it takes approximately 250 ms to access and draw the new screen. Additionally, each time a field on the active screen is changed it takes a finite amount of time to update the field. This update time is depends on the length and type of field.

When the Test Set is operated in the External Automatic Control mode it is possible to program it to only display a special “remote screen.” When the Test Set is in this mode, only the remote screen is displayed, regardless of the screen changes requested by the control program running on the external controller. The remote screen mode has no affect on the operation of the Test Set; all measurement modes, commands, and so forth, still operate normally. The only effect is that the active screen is never changed. This saves approximately 250 ms for every :DISPlay command in the control program and some finite amount of time for every field update.

When the remote screen is being displayed, the Test Set’s display is in the “locked” state. When the control program on the external controller unlocks the display, the screen is returned to the last remote screen requested. The *RST Common Command will place the Test Set’s display screen in the “unlocked” state. Pressing the LOCAL key causes a locked Test Set display session to end and causes the Test Set’s display screen to return to the unlocked state.

To Lock the Test Set’s Display Screen. Use the :SPECial:DISPlay 'LOCKED'|'UNLOCKED' commands to lock and unlock the Test Set’s display screen. 'LOCKED' causes the display to go to the remote screen and ignore screen changes and other display updates thus saving time. 'UNLOCKED' causes the display to return to the last screen requested by the remoter user. Further screen changes and display updates take place as normal.

Syntax

```
:SPECiaL:DISPlay ’LOCKED’
:SPECiaL:DISPlay ’UNLOCKED’
```

Example

```
OUTPUT 714;"SPEC:DISP ’LOCKED’"
```

This locks the Test Set’s display screen.

ManualsPlus.com

To Query the Lock/Unlock State of the Test Set's Display Screen. Use the :SPECial:DISPlay? commands to query the lock/unlock state of the Test Set display screen.

Syntax

```
:SPECiaL:DISPlay?
```

Example

```
OUTPUT 714;"SPEC:DISP?"
ENTER 714;Lock_unlock$
```

This queries the lock/unlock state of the Test Set's display screen.

NOTE: Locking and unlocking the Test Set's display screen is an External Automatic Control mode, GPIB only function and cannot be done through the Test Set's front panel.

NOTE: SPECial:DISPlay 'LOCKED'|'UNLOCKED' must not be invoked from the Test Set's built-in IBASIC Controller. Executing these commands from an IBASIC program can produce unexpected results and is not supported.

ManualsPlus.com

Status Reporting

This section describes the status reporting structure used in the Test Set. The structure is based on the IEEE 488.1-1987 and 488.2-1987 Standards and the Standard Commands for Programmable Instruments (SCPI) Version 1994.0.

Status Reporting Structure Overview

Figure 3 on page 276 shows an overview of the status reporting structure used in the Test Set. The status reporting structure is used to communicate the Test Set's current status information to the application program. The term *status information* encompasses a variety of conditions which can occur in a Test Set, such as, has a measurement been completed, has an internal hardware failure occurred, has a command error occurred, has data available, and so forth. Many such conditions can exist in the Test Set. Like conditions are grouped together and maintained in Status Register Groups. Information in each register group is summarized into a Summary Message Bit. Summary Message Bits always track the current status of the associated register group. All of the Summary Message Bits are, in turn, summarized into the Status Byte Register.

Therefore, by monitoring the bits in the Status Byte Register the application program can determine if a condition has occurred which needs attention, which register to interrogate to determine what condition(s) have occurred, and what action to take in response to the condition.

NOTE: A Status Register Group Summary Message Bit may be summarized indirectly to the Status Byte Register through a Status Register Group which is summarized directly into the Status Byte Register.

Bits in the Status Byte Register can also be used to initiate a Service Request message (SRQ) by enabling the associated bit in the Service Request Enable Register. When an enabled condition exists, the Test Set sends the Service Request message (SRQ) on the GPIB bus and reports that it has requested service by setting the Request Service (RQS) bit in the Status Byte Register to the TRUE, logic 1, state. The Service Request message (SRQ) capability of the GPIB bus is used to automatically signal the Active Controller that the Test Set needs attention. The application program can then interrogate the Test Set and determine what caused it to request service. Refer to **"GPIB Service Requests" on page 329** for information on setting up, enabling and servicing SRQ generated interrupts.

ManualsPlus.com

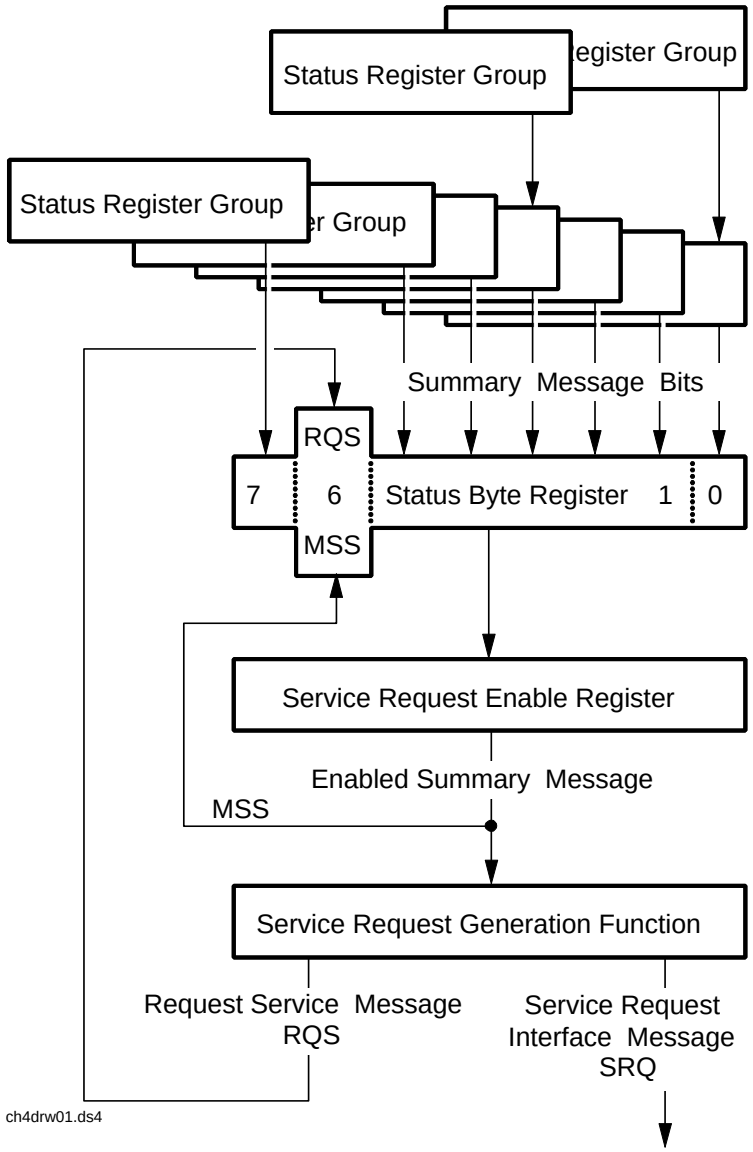

HP 8920 Status Reporting Structure

Figure 3 **Status Reporting Structure Overview**

ManualsPlus.com

Status Byte Register

The Status Byte Register is an 8-bit register that is used to summarize the Summary Messages from all the register groups in the Test Set, and the Request Service (RQS) or Master Summary Status (MSS) messages. The contents of the Status Byte Register, referred to as the *status byte*, can be read by the Active Controller to determine the condition of each of the register groups. The Summary Message from each register group is assigned to a specific bit position in the Status Byte Register as shown in **Figure 4**. If the Summary Message from a particular register group is TRUE, logic 1, its assigned bit in the Status Byte Register will also be TRUE. If the Summary Bit from a particular register group is FALSE, logic 0, its assigned bit in the Status Byte Register will also be FALSE.

NOTE: A Status Register Group Summary Message Bit may be summarized indirectly to the Status Byte Register through a Status Register Group which is summarized directly into the Status Byte Register.

ManualsPlus.com

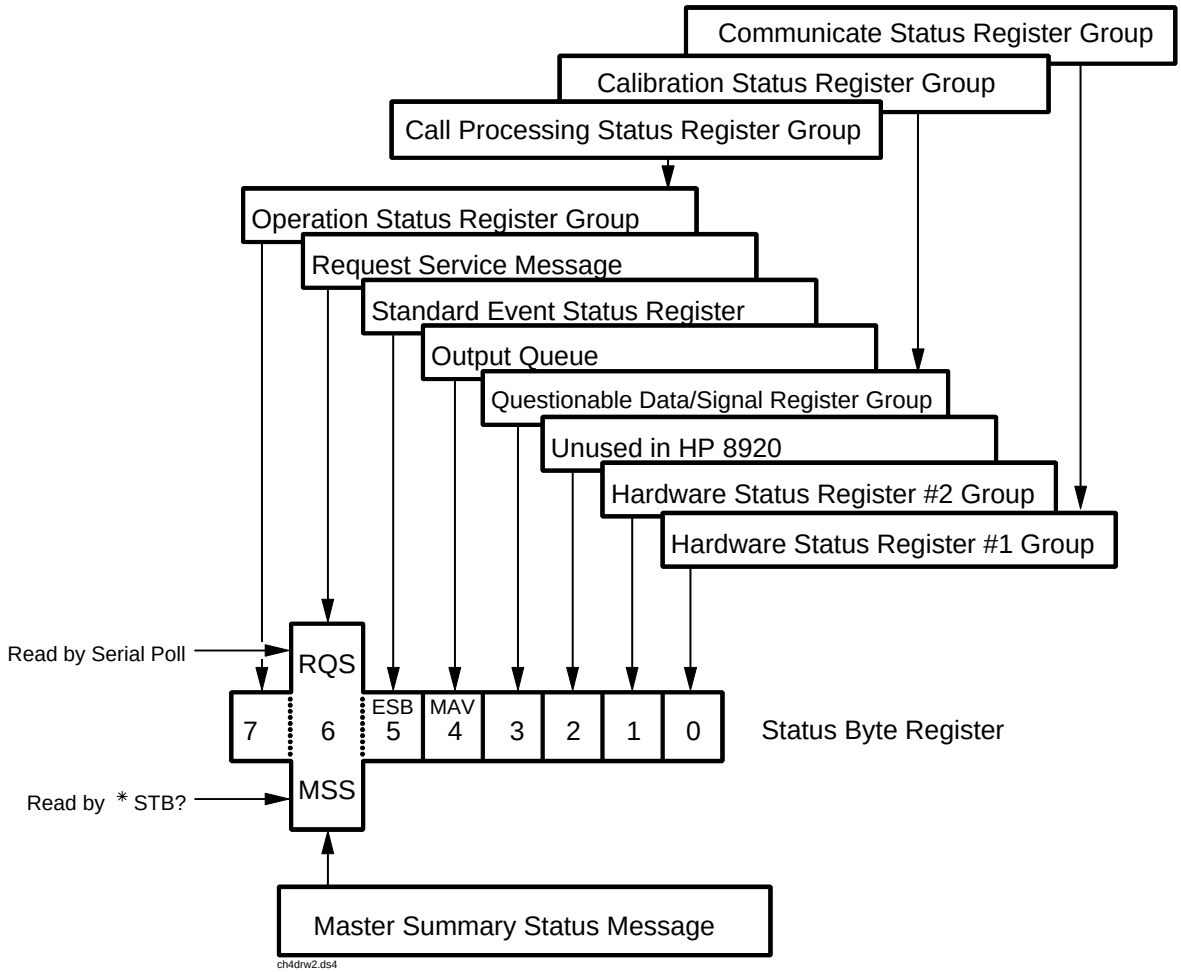

Figure 4 **Status Byte Register**

Table 20 details the Status Byte Register bit assignments and their associated meaning.

ManualsPlus.com

Table 20 Status Byte Register Bit Assignments

Bit Number	Binary Weighting	Condition	Comment
7	128	Operation Status Register Group Summary Message	1= one or more of the enabled events have occurred since the last reading or clearing of the Event Register
6	64	Request Service (RQS) when read by serial poll OR Master Summary Status message when read by *STB? command	1= Test Set has requested service OR 1= one or more of the enabled service request conditions is true
5	32	Standard Event Status Bit (ESB) Summary Message	1= one or more of the enabled events have occurred since the last reading or clearing of the Event Register
4	16	Output Queue Message Available (MAV) Summary Message	1= information is available in the Output Queue
3	8	Questionable Data/Signal Register Group Summary Message	1= one or more of the enabled events have occurred since the last reading or clearing of the Event Register
2	4	Unused in Test Set	
1	2	Hardware #2 Status Register Group Summary Message	1 = one or more of the enabled events have occurred since the last reading or clearing of the Event Register
0	1	Hardware #1 Status Register Group Summary Message	1 = one or more of the enabled events have occurred since the last reading or clearing of the Event Register

The Status Byte Register is unique in that bit 6 can take on two different meanings. The contents of the Status Byte Register can be read two ways: by using a serial poll, or by using the *STB? Common Command. Both methods return the status byte message, bits 0-5, and bit 7, as defined in **Table 20**. The value sent for bit 6 is, however, dependent upon the method used.

ManualsPlus.com

Reading with a Serial Poll

The contents of the Status Byte Register can be read by a serial poll from the Active Controller in response to some device on the bus sending the Service Request (SRQ) message. When read with a serial poll, bit 6 in the Status Byte Register represents the Request Service (RQS) condition. Bit 6 is TRUE, logic 1, if the Test Set is sending the Service Request (SRQ) message and FALSE, logic 0, if it is not. Bits 0-5 and bit 7 are defined as shown in **Table 20 on page 5 279**. When read by a serial poll the RQS bit is cleared (set to 0) so that the RQS message will be FALSE if the Test Set is polled again before a new reason for requesting service has occurred. Bits 0-5 and bit 7 are unaffected by a serial poll.

Reading with the *STB? Common Command

The contents of the Status Byte Register can be read by the application program using the *STB? Common Command. When read with the *STB? Common Command, bit 6 represents the Master Summary Status (MSS) message. The MSS message is the inclusive OR of the bitwise combination (excluding bit 6) of the Status Byte Register and the Service Request Enable Register. For a discussion of Summary Messages, see **“Status Register Structure Overview” on page 281**. Bit 6 is TRUE, logic 1, if the Test Set has at least one reason for requesting service and FALSE, logic 0, if it does not. Bits 0-5 and bit 7 are defined as shown in **Table 20 on page 5 279**. When read by the *STB? Common Command, bits 0-5, bit 6, and bit 7 are unaffected

The *STB? Status Byte Query allows the programmer to determine the current contents (bit pattern) of the Status Byte Register and the Master Summary Status (MSS) message as a single element. The Test Set responds to the *STB? query by placing the binary-weighted decimal value of the Status Byte Register and the MSS message into the Output Queue. The response represents the sum of the binary-weighted values of the Status Byte Register’s bits 0-5 and 7 (weights 1,2,4,8,16,32 and 128 respectively) and the MSS summary message (weight 64). Thus, the response to *STB?, when considered as a binary value, is identical to the response to a serial poll except that the MSS message of **1** indicates that the Test Set has at least one reason for requesting service (Refer to the IEEE 488.2-1987 Standard for a complete description of the MSS message). The decimal value of the bit pattern will be a positive integer in the range of 0 to 255. The response data is obtained by reading the Output Queue into a numeric variable, integer or real.

ManualsPlus.com

Example BASIC program to read Status Byte with *STB command

```
10 INTEGER Stat_byte_reg,Stat_byte,Mstr_sum_msg
20 OUTPUT 714;"*STB?"
30 ENTER 714;Stat_byte_reg
40 Stat_byte=BINAND(Stat_byte_reg,191) !mask out the MSS bit
50 PRINT Stat_byte
60 Mstr_sum_msg=BINAND(Stat_byte_reg,64) !mask out the Stat
Byte
70 PRINT Mstr_sum_msg
80 END
```

Example response

```
32
0
```

Writing the Status Byte Register

The Status Byte Register is a read-only register and is altered only when the state of the Summary Messages from the overlaying data structures are altered.

Clearing the Status Byte Register

The *CLS Common Command clears all Event Registers and Queues so that their corresponding Summary Messages are cleared. The Output Queue and its MAV Summary Message are an exception and are unaffected by the *CLS Common Command.

Status Register Structure Overview

The structure of the register groups used in the Test Set is based upon the status data structures outlined in the IEEE 488 and SCPI 1994.0 Standards. There are two types of status data structures used in the Test Set: status registers and status queues. The general models, components, and operation of each type of status data structure are explained in the following sections.

ManualsPlus.com

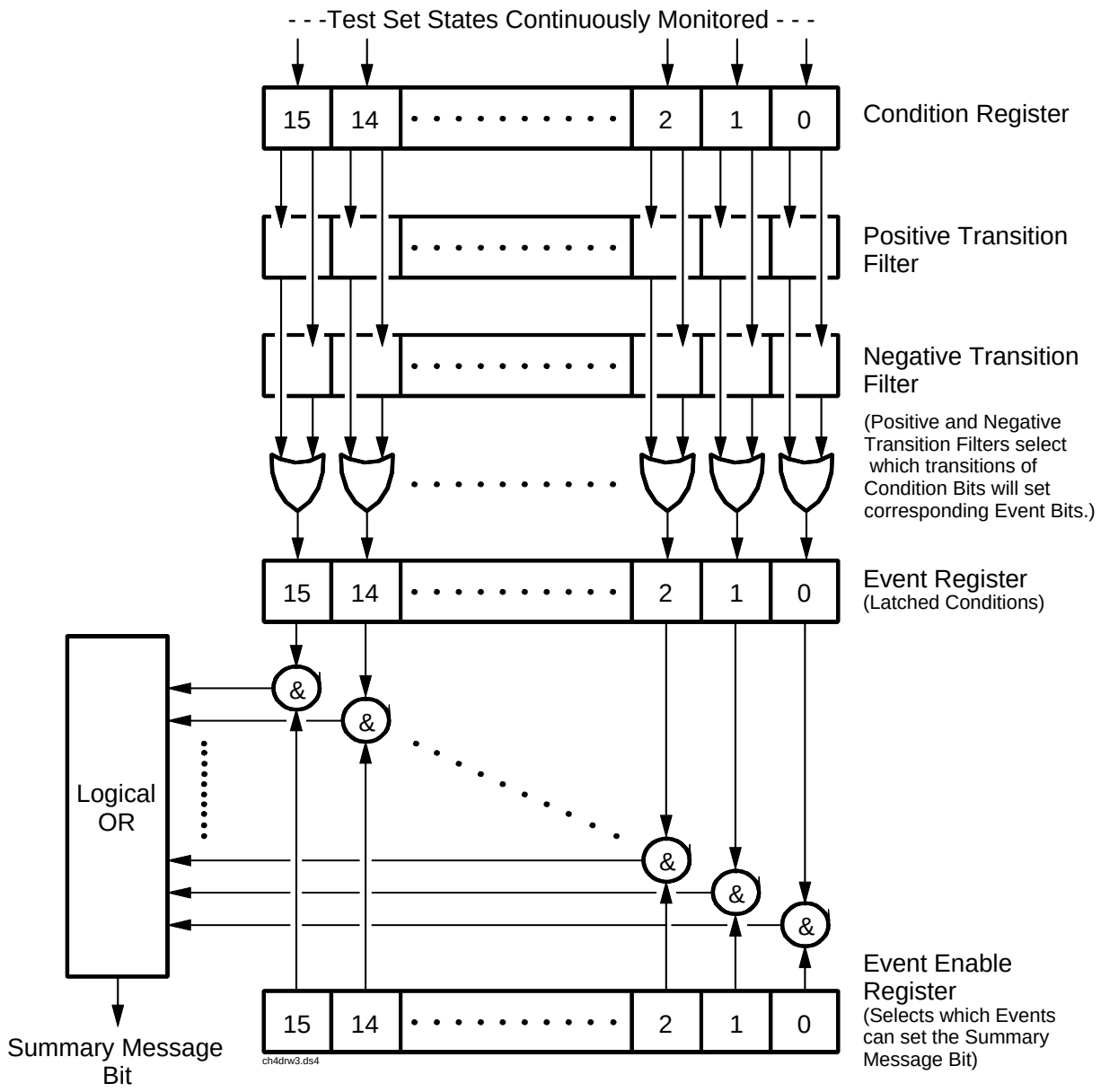

Figure 5 **Status Data Structure - Register Model**

ManualsPlus.com

Status Register Model

This section explains how the status registers are structured in the Test Set. The generalized status register model shown in **Figure 5 on page 282** is the basis upon which all the status registers in the Test Set are built. The model consists of a Condition Register, Transition Filters, an Event Register, an Enable Register, and a Summary Message. A set of these registers is called a Status Register Group.

Condition Register. A condition is a Test Set state that is either TRUE or FALSE (an GPIB command error has occurred or an GPIB command error has not occurred). Each bit in a Condition Register is assigned to a particular Test Set state. A Condition Register continuously monitors the hardware and firmware states assigned to it. There is no latching or buffering of any bits in a Condition Register; it is updated in real time. Condition Registers are read-only. Condition Registers in the Test Set are 16 bits long and may contain unused bits. All unused bits return a zero value when read.

Transition Filters. For each bit in the Condition Register, the Transition Filters determine which of two bit-state transitions will set the corresponding bit in the Event Register. Transition Filters may be set to pass positive transitions (PTR), negative transitions (NTR) or either (PTR or NTR). A positive transition means a condition bit changed from 0 to 1. A negative transition means a condition bit changed from 1 to 0.

In the Test Set, the Transition Filters are implemented as two registers: a 16-bit positive transition (PTR) register and a 16-bit negative transition (NTR) register. A positive transition of a bit in the Condition register will be latched in the Event Register if the corresponding bit in the positive transition filter is set to 1. A positive transition of a bit in the Condition register will *not* be latched in the Event Register if the corresponding bit in the positive transition filter is set to 0. A negative transition of a bit in the Condition register will be latched in the Event Register if the corresponding bit in the negative transition filter is set to 1. A negative transition of a bit in the Condition register will *not* be latched in the Event Register if the corresponding bit in the negative transition filter is set to 0. Either transition (PTR or NTR) of a bit in the Condition Register will be latched in the Event Register if the corresponding bit in both transition filters is set to 1. No transitions (PTR or NTR) of a bit in the Condition Register will be latched in the Event Register if the corresponding bit in both transition filters is set to 0.

ManualsPlus.com

Transition Filters are read-write. Transition Filters are unaffected by a *CLS (clear status) command or queries. The Transitions Filters are set to pass positive transitions (PTR) at power on and after receiving the *RST (reset) command (all 16 bits of the PTR register set to 1 and all 16 bits of the NTR register set to 0).

Event Register. The Event Register captures bit-state transitions in the Condition Register as defined by the Transition Filters. Each bit in the Event Register corresponds to a bit in the Condition Register, or if there is no Condition Register/ Transition Filter combination, each bit corresponds to a specific condition in the Test Set. Bits in the Event Register are latched, and, once set, they remain set until cleared by a query of the Event Register or a *CLS (clear status) command. This guarantees that the application can't miss a bit-state transition in the Condition Register. There is no buffering; so while an event bit is set, subsequent transitions in the Condition Register corresponding to that bit are ignored. Event Registers are read-only. Event Registers in the Test Set are either 8 or 16 bits long and may contain unused bits. All unused bits return a zero value when read.

Event Enable Register. The Event Enable Register defines which bits in the Event Register will be used to generate the Summary Message. Each bit in the Enable Register has a corresponding bit in the Event Register. The Test Set logically ANDs corresponding bits in the Event and Enable registers and then performs an inclusive OR on all the resulting bits to generate the Summary Message. By using the enable bits the application program can direct the Test Set to set the Summary Message to the 1 or TRUE state for a single event or an inclusive OR of any group of events. Enable Registers are read-write. Enable Registers in the Test Set are either 8 or 16 bits long and may contain unused bits which correspond to unused bits in the associated Event Register. All unused bits return a zero value when read and are ignored when written to. Enable Registers are unaffected by a *CLS (clear status) command or queries.

Summary Message Bit. The Summary Message is a single-bit message which indicates whether or not one or more of the enabled events have occurred since the last reading or clearing of the Event Register. The Test Set logically ANDs corresponding bits in the Event and Enable registers and then performs an inclusive OR on all the resulting bits to generate the Summary Message. By use of the enable bits, the application program can direct the Test Set to set the Summary Message to the 1, or TRUE, state for a single event or an inclusive OR of any group of events. The Summary Message is TRUE when an enabled event in the Event Register is set TRUE. Conversely, the Summary Message is FALSE when no enabled events are TRUE. Summary Messages are always seen as bits in another register.

ManualsPlus.com

Status Reporting Structure Operation.

In general the status reporting structure described on the previous pages is used as follows:

- Determine which conditions, as defined by their bit positions in the Condition Register, should cause the Summary Message to be set TRUE if they occur.
  For example, Condition Register Bit 3 = Overpower Protection Tripped
- Determine the polarity of the bit-state transition which will indicate the condition has occurred.
  For example,
  logic 0 = Overpower Protection not tripped
  logic 1 = Overpower Protection tripped
  occurrence indicated by a 0 to 1 transition
  use positive transition (PTR) filter for bit 3
- Set the Transition Filters to the correct polarity to pass the bit-state transition to the Event Register.
  For example,
  Set Positive Transition Filter bit 3 to 1, all other bits to 0.
  Set Negative Transition Filter bit 3 to 0, all other bits to 0.
- Set the correct bits in the Enable Register to generate the Summary Message if the condition has been latched into the Event Register.
  For example,
  Set bit 3 of the Enable Register to a logic 1, all other bits to 0.
- Repeat these steps for any register containing the Summary Message bit.

ManualsPlus.com

Status Queue Model

This section explains how status queues are structured in the Test Set. The generalized status queue model shown in **Figure 6** is the basis upon which all the status queues in the Test Set are built. A queue is a data structure containing a sequential list of information. The queue is empty when all information has been read from the list. The associated Summary Message is TRUE, logic 1, if the queue contains some information and FALSE, logic 0, if the queue is empty. Queues can be cleared by reading all the information from the queue. Queues, except the Output Queue, can also be cleared using the *CLS (clear status) command. A status queue can also be referred to as a Status Register Group.

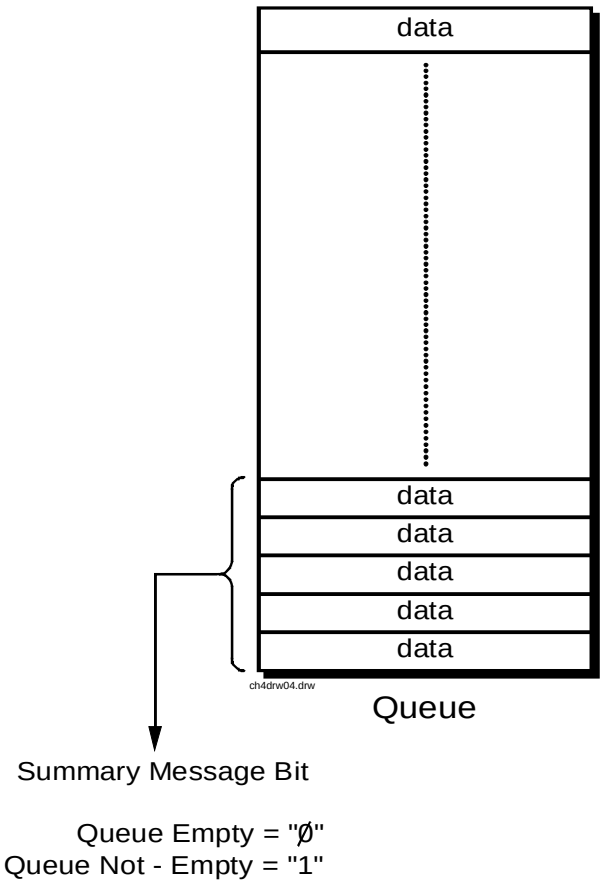

Figure 6 **Status Data Structure - Queue Mode**

ManualsPlus.com

Status Register Group Contents

Figure 7 shows the Status Register Groups in the Test Set. The contents of each Status Register Group is explained in the following sections.

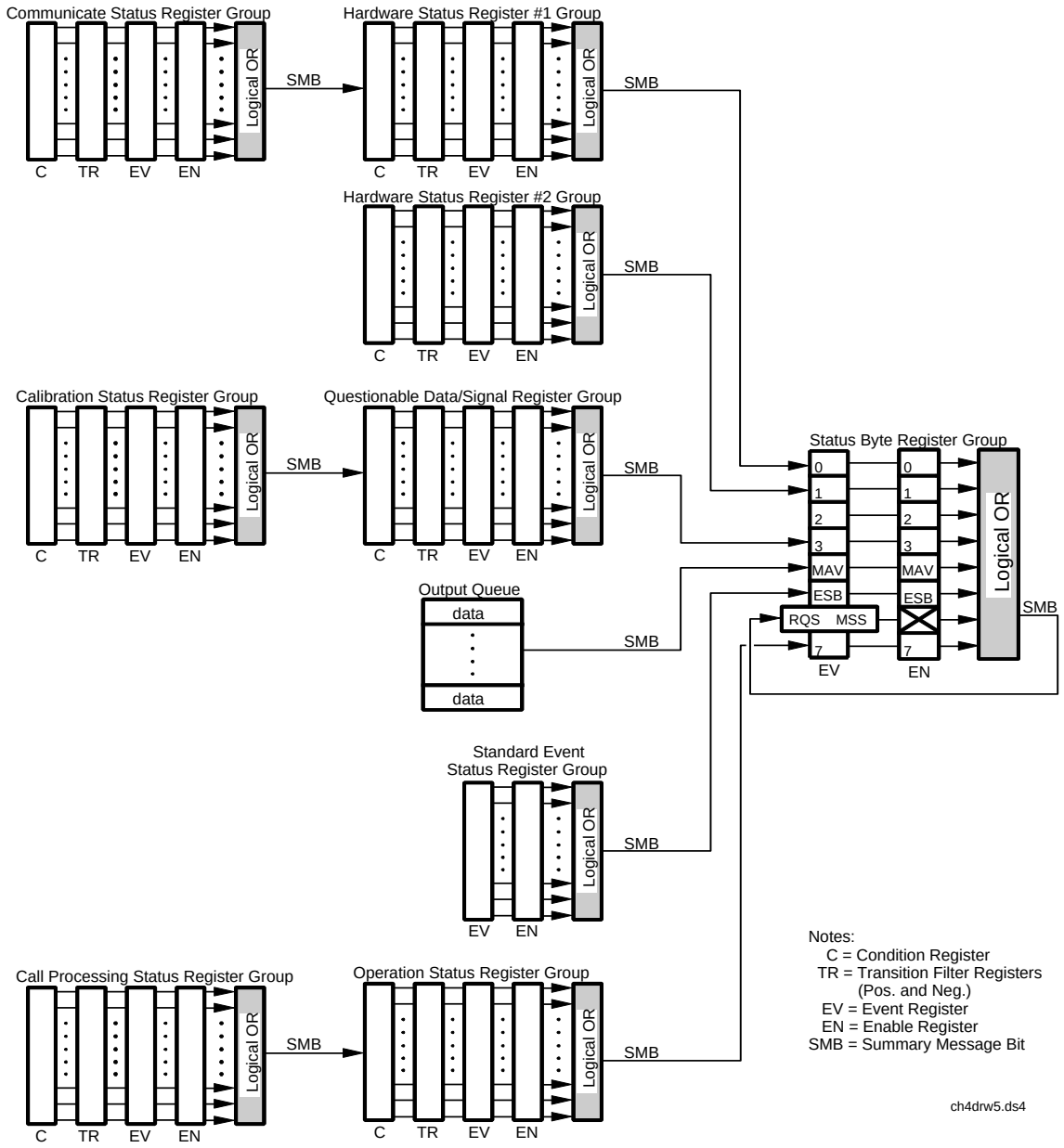

Figure 7 **Test Set Status Register Groups**

ManualsPlus.com

Operation Status Register Group

The Operation Status Register Group contains information about the state of the measurement systems in the Test Set. This status group is accessed using the STATus commands. The Operation Status Register Group uses 16-bit registers and includes a Condition Register, Transition Filters, an Event Register, an Enable Register, and a Summary Message. Refer to the **"Status Register Structure Overview" on page 281** for a discussion of status register operation. **Figure 8** shows the structure and STATus commands for the Operation Status Register Group.

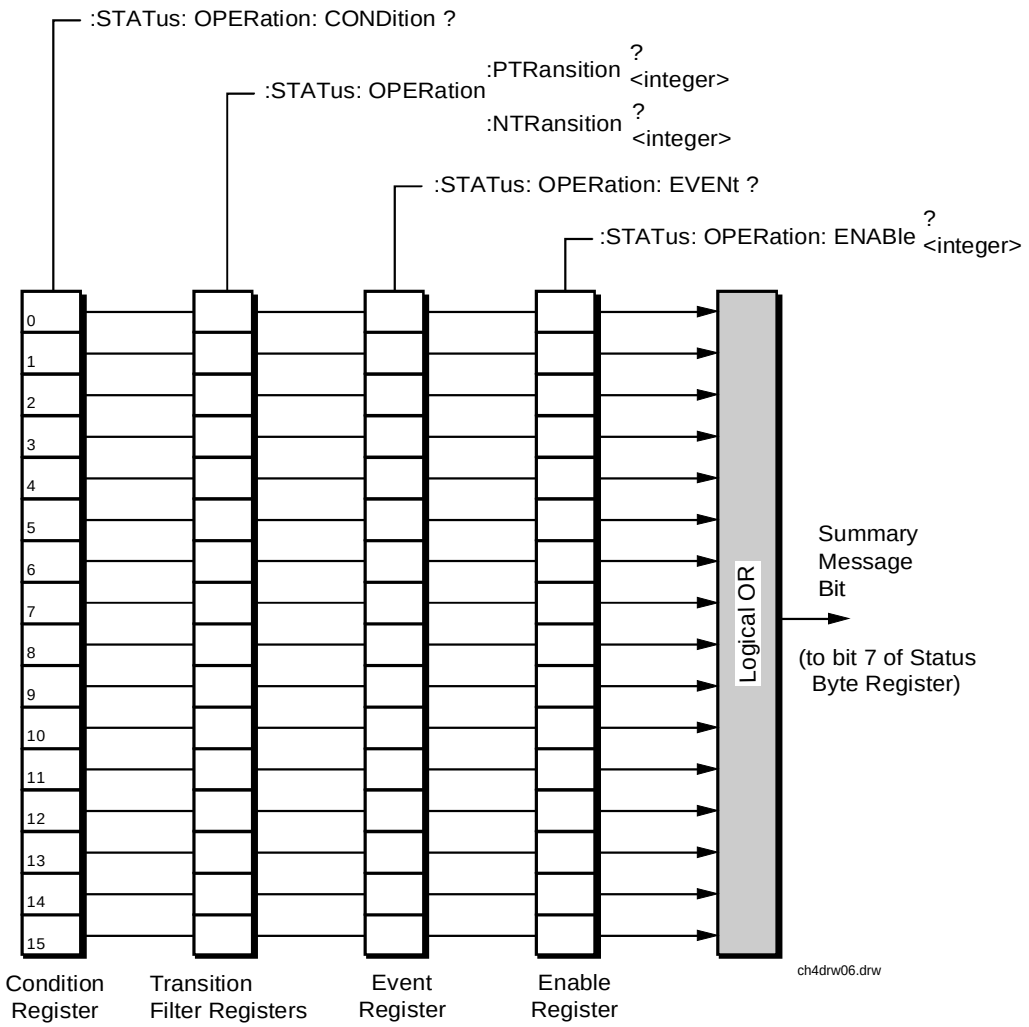

Figure 8 **Operation Status Register Group**

ManualsPlus.com

Table 21 shows the Operation Status Register Group Condition Register bit assignments.

Table 21 Operation Status Register Group Condition Register Bit Assignments

Bit Number	Binary Weighting	Condition	Comment
15	32768	Not Used (Always 0)	Defined by SCPI Version 1994.0
14	16384	IBASIC Program Running	1 = an IBASIC program is running on the built-in IBASIC controller.
13	8192	Unused in the Test Set	
12	4096	Unused in the Test Set	
11	2048	Unused in the Test Set	
10	1024	Unused in the Test Set	
9	512	Call Processing Status Register Group Summary Message	1 = one or more of the enabled events have occurred since the last reading or clearing of the Event Register.
8	256	Unused in the Test Set	
7	128	Unused in the Test Set	
6	64	Unused in the Test Set	
5	32	Unused in the Test Set	
4	16	Unused in the Test Set	
3	8	Unused in the Test Set	
2	4	Unused in the Test Set	
1	2	Unused in the Test Set	
0	1	Unused in the Test Set	

ManualsPlus.com

Accessing the Operation Status Register Group's Registers

The following sections show the syntax and give programming examples, using the Instrument BASIC programming language, for the STATus commands used to access the Operation Status Register Group's registers.

Reading the Condition Register

Syntax

```
STATus:OPERation:CONDition?
```

Example

```
OUTPUT 714;"STAT:OPER:COND?"
ENTER 714;Register_value
```

Reading the Transition Filters

Syntax

```
STATus:OPERation:PTRansition?
STATus:OPERation:NTRansition?
```

Example

```
OUTPUT 714;"STAT:OPER:PTR?"
ENTER 714;Register_value
```

Writing the Transition Filters

Syntax

```
STATus:OPERation:PTRansition <integer>
STATus:OPERation:NTRansition <integer>
```

Example

```
OUTPUT 714;"STAT:OPER:PTR 256"
```

ManualsPlus.com

Reading the Event Register

Syntax

```
STATus:OPERation:EVENt?
```

Example

```
OUTPUT 714;"STAT:OPER:EVEN?"
ENTER 714;Register_value
```

Clearing the Event Register

The EVENT register is cleared whenever it is queried or whenever the Common Command *CLS is sent to the Test Set.

Reading the Enable Register

Syntax

```
STATus:OPERation:ENABle?
```

Example

```
OUTPUT 714;"STAT:OPER:ENAB?"
ENTER 714;Register_value
```

Writing the Enable Register

Syntax

```
STATus:OPERation:ENABle <integer>
```

Example

```
OUTPUT 714;"STAT:OPER:ENAB 256"
```

Clearing the Enable Register

The ENABLE register is cleared by writing to it with an integer value of zero.

ManualsPlus.com

Standard Event Status Register Group

The Standard Event Status Register Group is a specific implementation of the status register model described in the Status Register Structure Overview section. The conditions monitored by the Standard Event Status Register Group are defined by the IEEE 488.2-1987 Standard. The Standard assigns specific Test Set conditions to specific bits in the Standard Event Status Register. **Table 22 on page 5 293** details the Standard Event Status Register bit assignments and their meanings. The Standard Event Status Register Group is accessed using IEEE 488.2 Common Commands. The Standard Event Status Register Group includes an Event Register, an Enable Register, and a Summary Bit. Refer to the **"Status Reporting Structure Overview" on page 275** for a discussion of status register operation. **Figure 9** shows the structure and IEEE 488.2 Common Commands used to access the Standard Event Status Register Group.

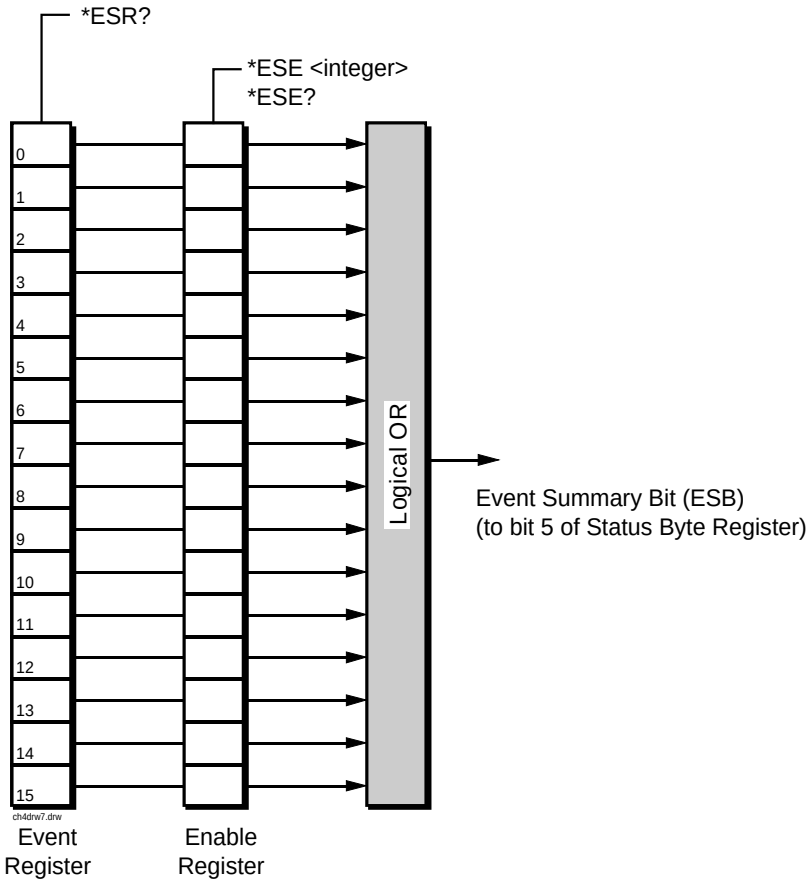

Figure 9 **Standard Event Status Register Group**

ManualsPlus.com

Accessing the Standard Event Status Register Group's Registers

Table 22 Standard Event Status Register Bit Assignments

Bit Number	Binary Weighting	Condition	Comment
15	32879	Always 0	Reserved by IEEE 488.2
14	16384	Always 0	Reserved by IEEE 488.2
13	8192	Always 0	Reserved by IEEE 488.2
12	4096	Always 0	Reserved by IEEE 488.2
11	2048	Always 0	Reserved by IEEE 488.2
10	1024	Always 0	Reserved by IEEE 488.2
9	512	Always 0	Reserved by IEEE 488.2
8	256	Always 0	Reserved by IEEE 488.2
7	128	Power On	1 = Test Set's power supply has been turned off and then on since the last time this register was read.
6	64	User Request	Not implemented in Test Set.
5	32	Command Error	1 = The Test Set detected an error while trying to process a command. The following events cause a command error: An IEEE 488.2 syntax error. This means that the Test Set received a message that did not follow the syntax defined by the Standard. A semantic error. For example, the Test Set received an incorrectly spelled command. The Test Set received a Group Execute Trigger (GET) inside a program message.
4	16	Execution Error	1 = The Test Set detected an error while trying to execute a command. The following events cause an execution error: A <PROGRAM DATA> element received in a command is outside the legal range for the Test Set or is inconsistent with the operation of the Test Set. The Test Set could not execute a valid command due to some Test Set hardware/firmware condition.
3	8	Device Dependent Error	1 = A Test Set dependent error has occurred. This means that some Test Set operation did not execute properly due to some internal condition, such as overrange. This bit indicates that the error was not a command, query, or execution error.

ManualsPlus.com

Table 22 Standard Event Status Register Bit Assignments (Continued)

Bit Number	Binary Weighting	Condition	Comment
2	4	Query Error	1 = An error has occurred while trying to read the Test Set's Output Queue. The following events cause a query error: **a.** An attempt is being made to read data from the Output Queue when no data is present or pending. **b.** Data in the Output Queue has been lost. An example of this would be Output Queue overflow.
1	2	Request Control	1 = The Test Set is requesting permission to become the Active Controller on the GPIB bus.
0	1	Operation Complete	1 = The Test Set has completed all selected pending operations and is ready to accept new commands. This bit is only generated in response to the *OPC IEEE 488.2 Common Command.

The following sections show the syntax and give programming examples (using the Instrument BASIC programming language) for the Common Commands used to access the Standard Event Status Register Group's registers.

Reading the Event Register

Syntax

```
*ESR?
```

ManualsPlus.com

Example

```
OUTPUT 714;"*ESR?"
ENTER 714;Register_value
```

The *ESR? query allows the programmer to determine the current contents (bit pattern) of the Standard Event Status Register. The Test Set responds to the *ESR? query by placing the binary-weighted decimal value of the Standard Event Status Register bit pattern into the Output Queue. The decimal value of the bit pattern will be a positive integer in the range of 0 to 255. The response data is obtained by reading the Output Queue into a numeric variable, integer or real. Reading the Standard Event Status Register clears it (sets all bits to zero).

Example BASIC program

```
10 INTEGER Std_evn_stat_rg
20 OUTPUT 714;"*ESR?"
30 ENTER 714;Std_evn_stat_rg
40 PRINT Std_evn_stat_rg
50 END
```

Example response

```
32
```

Clearing the Event Register

The EVENT register is cleared whenever it is queried or whenever the *CLS Common Command is sent to the Test Set.

ManualsPlus.com

Reading the Enable Register

Syntax

```
*ESE?
```

Example

```
OUTPUT 714;"*ESE?"
ENTER 714;Register_value
```

The *ESE? query allows the programmer to determine the current contents (bit pattern) of the Standard Event Status Enable Register. The Test Set responds to the *ESE? query by placing the binary-weighted decimal value of the Standard Event Status Enable Register bit pattern into the Output Queue. The decimal value of the bit pattern will be a positive integer in the range of 0 to 255. The response data is obtained by reading the Output Queue into a numeric variable, integer or real.

Example BASIC program

```
10 INTEGER Std_evn_enab_rg
20 OUTPUT 714;"ESE?"
30 ENTER 714;Std_evn_enab_rg
40 PRINT Std_evn_enab_rg
50 END
```

Example response

```
36
```

ManualsPlus.com

Writing the Enable Register

Syntax

```
*ESE <integer>
```

Example

```
OUTPUT 714;"*ESE 255"
```

The *ESE command sets the bit pattern (bits 0 through 7) of the Standard Event Status Enable Register. The Standard Event Status Enable Register allows the programmer to indicate the occurrence of one or more events (as defined by bits 0 through 7 of the Standard Event Status Register) in bit 5 of the Status Byte Register.

The bit pattern set by the *ESE command is determined by selecting the desired event(s) from the Standard Event Status Register, setting the value of the bit position(s) to a logical one, setting the value of all non-selected bit positions to a logical zero, and sending the binary-weighted decimal equivalent of bits 0 through 7 after the *ESE command. For example, if the programmer wished to have the occurrence of a Command Error (bit position 5 in the Standard Event Status Register) and the occurrence of a Query Error (bit position 2 in the Standard Event Status Register) to be reflected in bit 5 of the Status Byte Register, the binary-weighted decimal value of the bit pattern for the Standard Event Status Enable Register would be determined as follows:

Bit Position	7	6	5	4	3	2	1	0	
Logical Value	0	0	1	0	0	1	0	0	
Binary Weighting	128	64	32	16	8	4	2	1	
Decimal Value	0	+0	+32	+0	+0	+4	+0	+0	= 36

Example

```
OUTPUT 714;"*ESE 36"
```

The decimal value of the bit pattern must be a positive integer in the range of 0 to 255. Sending a negative number or a number greater than 255 causes an **`HP-IB Error: -222 Data out of range`**.

Clearing the Enable Register

The ENABLE register is cleared by writing to it with an integer value of zero.

ManualsPlus.com

Output Queue Group

The Output Queue Group is a specific implementation of the status queue model described in **"Status Queue Model" on page 286**. The Output Queue queue type is defined by the IEEE 488.2-1987 Standard to be a first in, first out (FIFO) queue. The Output Queue Group includes a FIFO queue and a Message Available (MAV) Summary Message. Refer to the **"Status Reporting Structure Overview" on page 275** for an overview of status queue operation. **Figure 10** shows the structure of the Output Queue Group.

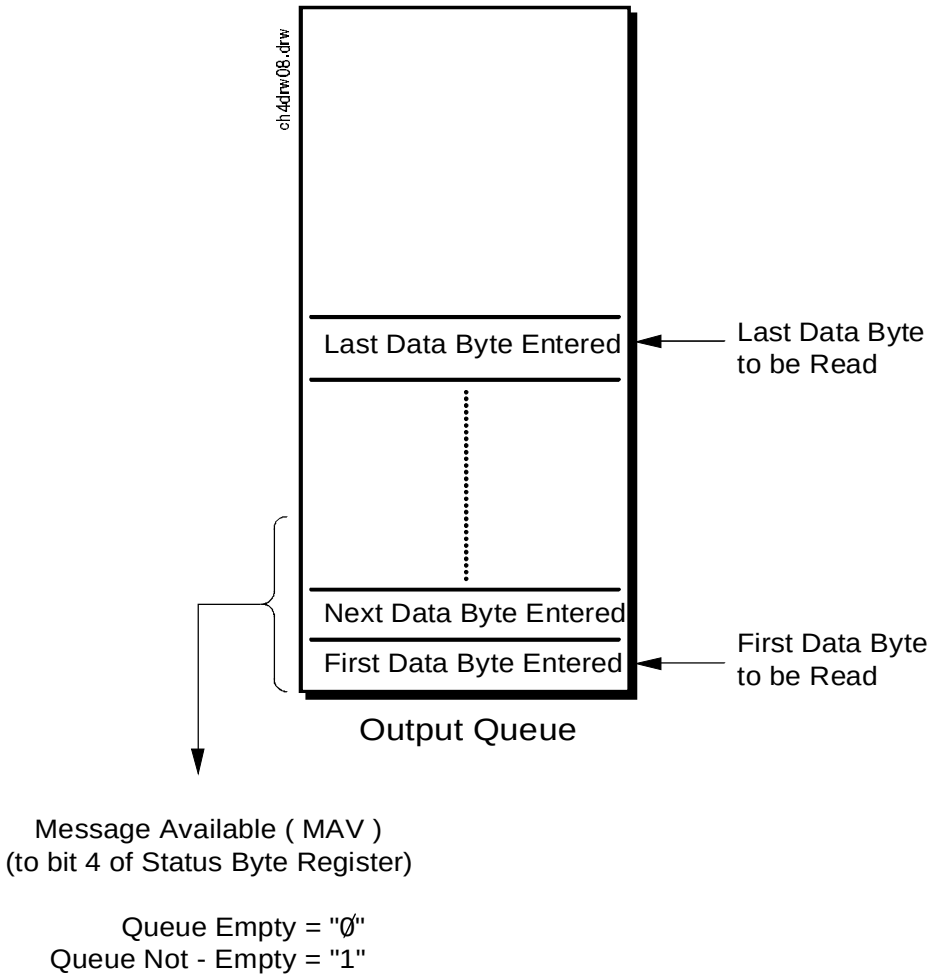

Figure 10 **Output Queue Group**

ManualsPlus.com

Accessing the Output Queue

When messages are sent to the Test Set, it decodes the message to determine what commands have been sent. Depending upon the type of command, the Test Set's processor sends messages to various parts of the instrument. Many commands generate data which must be sent back to the controller. This data is buffered in the Output Queue until it is read by the controller. The availability of data is summarized in the MAV bit of the Status Byte Register. The state of the MAV message indicates whether or not the Output Queue is empty. The MAV message is TRUE, logic 1, when there is data in the Output Queue and FALSE, logic 0, when it is empty. The Output Queue is read by addressing the Test Set to TALK and then handshaking the bytes out of the Output Queue. Depending upon the type of command sent, the data may appear in the Output Queue almost immediately, or it may take several seconds (as is the case with some Signaling Decoder measurements). Care should be exercised when reading the Output Queue since the GPIB bus will, by design, wait until the data is available before processing further bus messages.

Reading the Output Queue

Example

```
Enter 714;Output_data
```

ManualsPlus.com

Error Message Queue Group

The Error Message Queue Group is an implementation of the status queue model described in **"Status Queue Model" on page 286**. The Error Message Queue queue type is a first-in, first-out (FIFO) queue that holds up to 20 messages. The Error Message Queue Group includes a FIFO queue but no Message Available (MAV) Summary Message. Refer to the **"Status Reporting Structure Overview" on page 275** for an overview of status queue operation. **Figure 11** shows the structure of the Error Message Queue Group.

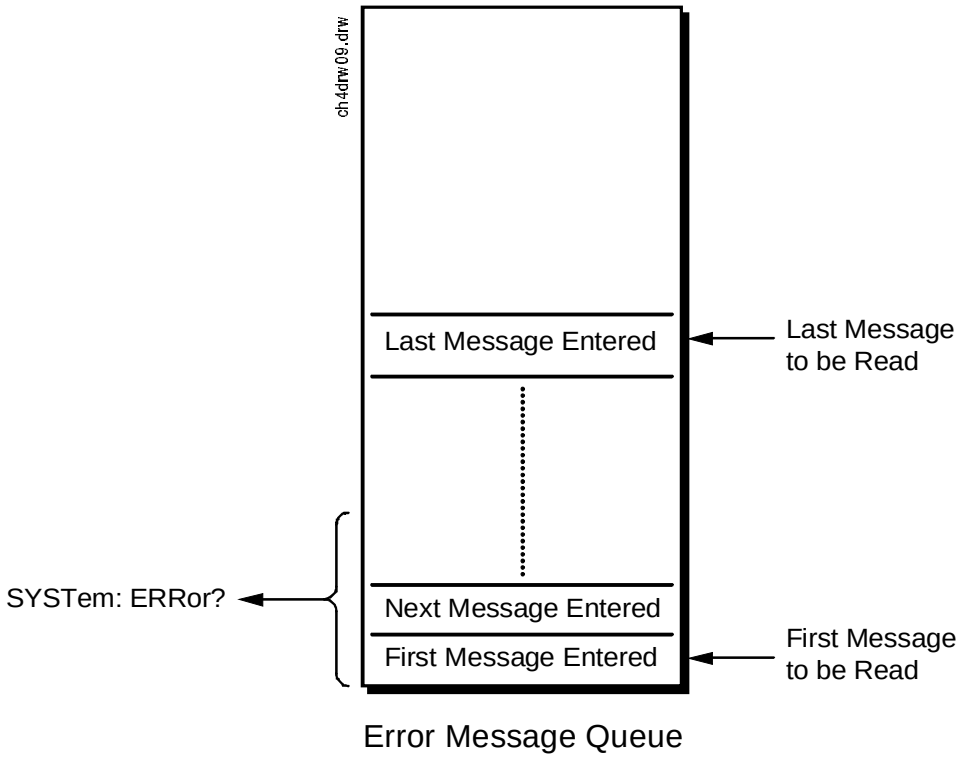

Figure 11 **Error Message Queue Group**

ManualsPlus.com

Accessing the Error Message Queue

A message appears in the Error Message Queue any time bit 2, 3, 4, or 5 of the Standard Event Status register is asserted. Each message consists of a signed error number, followed by a comma separator, followed by an error description string in double quotes. The maximum length of the error description string is 255 characters. If more than 20 messages are in the queue and another error occurs, the last message is replaced with the message, **`-350,"Queue overflow"`**. If no messages are in the queue the message, **`+0,"No error"`** is returned. Reading a message removes it from the queue. The Error Message Queue is accessed using the SYSTem command. Returned information is read into a numeric variable followed by a string variable.

Reading the Error Message Queue

Syntax

```
SYSTem:ERRor?
```

Example

```
OUTPUT 714;"SYST:ERR?"
ENTER 714;Error_num,Error_msg$
```

Example IBASIC program

```
10 INTEGER Error_num
20 DIM Error_msg$ [255]
30 OUTPUT 714;"SYST:ERR?"
40 ENTER 714;Error_num,Error_msg$
50 PRINT Error_num;Error_msg$
60 END
```

Example response

```
-113 "Undefined header"
```

ManualsPlus.com

Questionable Data/Signal Register Group

The Questionable Data/Signal Register Group contains information about the quality of the Test Set's output and measurement data. This status group is accessed using the STATus commands. The Questionable Data/Signal Register Group uses 16-bit registers and includes a Condition Register, Transition Filters, an Event Register, an Enable Register, and a Summary Message. Refer to the **"Status Reporting Structure Overview" on page 275** for a discussion of status register operation. **Figure 12** shows the structure and STATus commands for the Questionable Data/Signal Register Group.

ManualsPlus.com

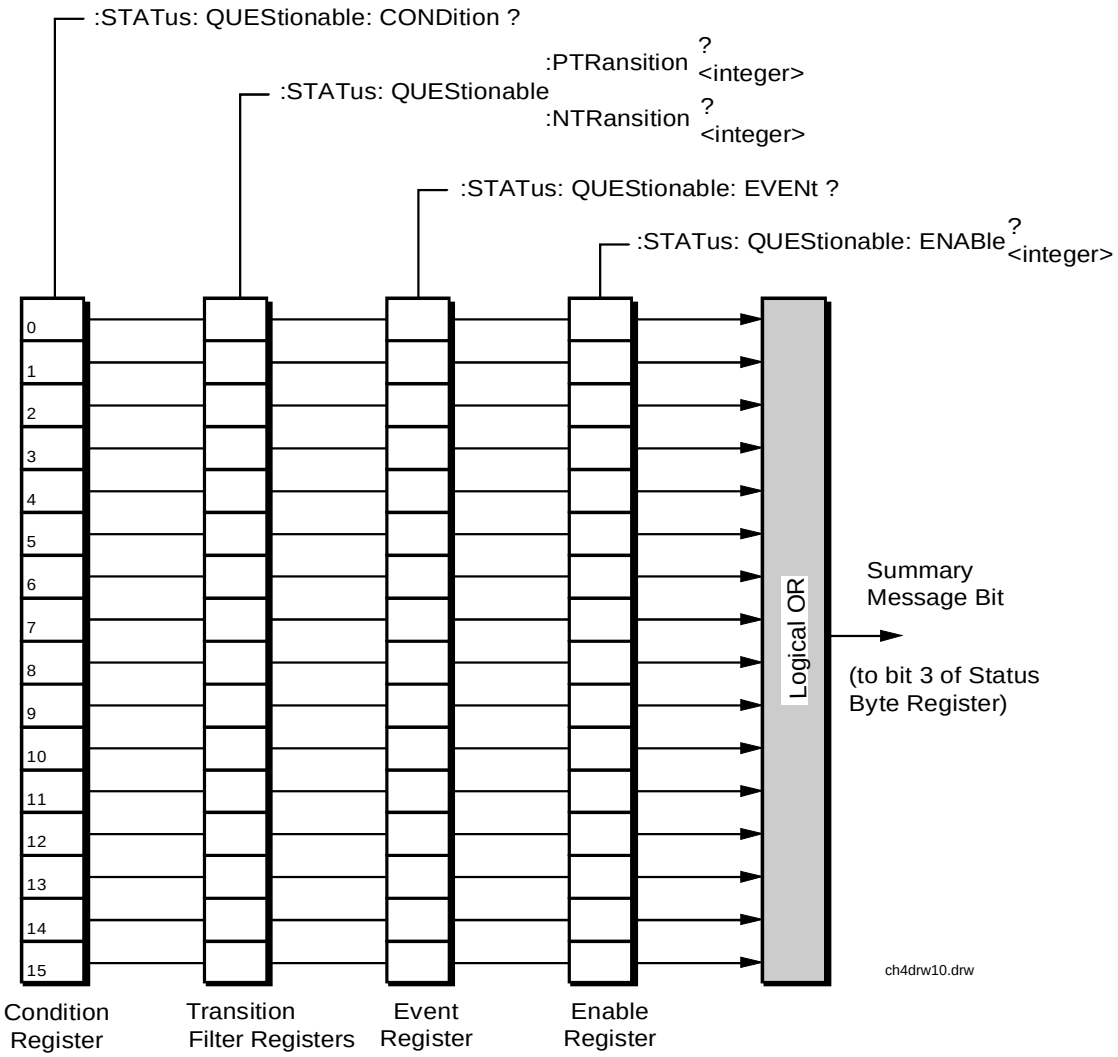

Figure 12 **Questionable Data/Signal Register Group**

ManualsPlus.com

Table 23 shows the Questionable Data/Signal Register Group's Condition Register bit assignments.

Table 23 Questionable Data/Signal Register Group, Condition Register Bit Assignments

Bit Number	Binary Weighting	Condition	Comment
15	32768	Not Used (Always 0)	Defined by SCPI Version 1994.0
14	16384	Unused in Test Set	
13	8192	Unused in Test Set	
12	4096	Unused in Test Set	
11	2048	Unused in Test Set	
10	1024	Unused in Test Set	
9	512	Unused in Test Set	
8	256	Calibration Register Group Summary Message	1 = one or more of the enabled events have occurred since the last reading or clearing of the Event Register.
7	128	Unused in Test Set	
6	64	Unused in Test Set	
5	32	Unused in Test Set	
4	16	Unused in Test Set	
3	8	Unused in Test Set	
2	4	Unused in Test Set	
1	2	Unused in Test Set	
0	1	Unused in Test Set	

ManualsPlus.com

Accessing the Questionable Data/Signal Register Group's Registers

The following sections show the syntax and give programming examples (using the Instrument BASIC programming language) for the STATus commands used to access the Questionable Data/Signal Register Group's registers.

Reading the Condition Register

Syntax

```
STATus:QUEStionable:CONDition?
```

Example

```
OUTPUT 714;"STAT:QUES:COND?"
ENTER 714;Register_value
```

Reading the Transition Filters

Syntax

```
STATus:QUEStionable:PTRansition?
STATus:QUEStionable:NTRansition?
```

Example

```
OUTPUT 714;"STAT:QUES:PTR?"
ENTER 714;Register_value
```

Writing the Transition Filters

Syntax

```
STATus:QUEStionable:PTRansition <integer>
STATus:QUEStionable:NTRansition <integer>
```

Example

```
OUTPUT 714;"STAT:QUES:PTR 256"
```

ManualsPlus.com

Reading the Event Register

Syntax

```
STATus:QUEStionable:EVENt?
```

Example

```
OUTPUT 714;"STAT:QUES:EVEN?"
ENTER 714;Register_value
```

Clearing the Event Register

The EVENT register is cleared whenever it is queried or whenever the Common Command *CLS is sent to the Test Set.

Reading the Enable Register

Syntax

```
STATus:QUEStionable:ENABle?
```

Example

```
OUTPUT 714;"STAT:QUES:ENAB?"
ENTER 714;Register_value
```

Writing the Enable Register

Syntax

```
STATus:QUEStionable:ENABle <integer>
```

Example

```
OUTPUT 714;"STAT:QUES:ENAB 256"
```

Clearing the Enable Register

The ENABLE register is cleared by writing to it with an integer value of zero.

ManualsPlus.com

Call Processing Status Register Group

The Call Processing Status Register Group contains information about the Test Set's Call Processing Subsystem. This status group is accessed using the STATus commands. The Call Processing Status Register Group uses 16-bit registers and includes a Condition Register, Transition Filters, an Event Register, an Enable Register, and a Summary Message. Refer to the **"Status Reporting Structure Overview" on page 275** for a discussion of status register operation. **Figure 13** shows the structure and STATus commands for the Call Processing Status Register Group.

ManualsPlus.com

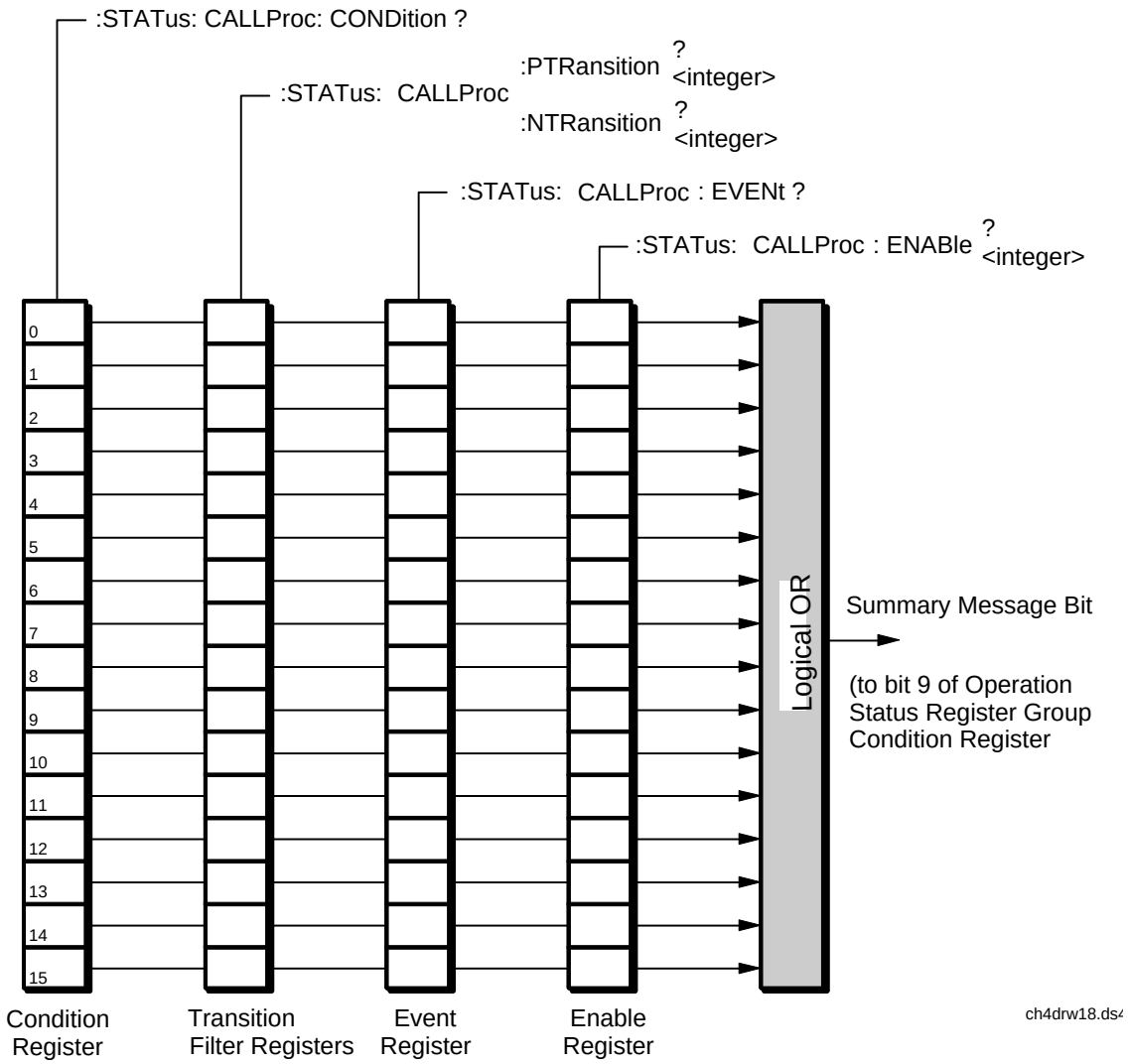

Figure 13 **Call Processing Status Register Group**

Table 24 details the Call Processing Status Register Group's Condition Register bit assignments.

ManualsPlus.com

Table 24 Call Processing Status Register Group, Condition Register Bit Assignments

Bit Number	Binary Weighting	Condition	Comment
15	32768	Not Used (Always 0)	Defined by SCPI Version 1994.0
14	16384	Unused in Test Set	
13	8192	Unused in Test Set	
12	4096	Unused in Test Set	
11	2048	Unused in Test Set	
10	1024	Unused in Test Set	
9	512	Unused in Test Set	
8	256	Unused in Test Set	
7	128	Unused in Test Set	
6	64	Unused in Test Set	
5	32	Call Processing subsystem in the **`Connect`** state	bit state mirrors the condition of the Connect pseudo-LED on the CRT display (1=ON, 0=OFF)
4	16	Call Processing subsystem is in the **`Access`** state	bit state mirrors the condition of the Access pseudo-LED on the CRT display (1=ON, 0=OFF)
3	8	Call Processing subsystem is in the **`Page`** state	bit state mirrors the condition of the Page pseudo-LED on the CRT display (1=ON, 0=OFF)
2	4	Unused in Test Set	
1	2	Call Processing subsystem is in the **`Register`** state	bit state mirrors the condition of the Register pseudo-LED on the CRT display (1=ON, 0=OFF)
0	1	Call Processing subsystem is in the **`Active`** state	bit state mirrors the condition of the Active pseudo-LED on the CRT display (1=ON, 0=OFF)

ManualsPlus.com

Accessing the Call Processing Status Register Group's Registers

The following sections show the syntax and give programming examples (using the Instrument BASIC programming language) for the STATus commands used to access the Call Processing Status Register Group's registers.

Reading the Condition Register

Syntax

```
STATus:CALLProc:CONDition?
```

Example

```
OUTPUT 714;"STAT:CALLP:COND?"
ENTER 714;Register_value
```

Reading the Transition Filters

Syntax

```
STATus:CALLProc:PTRansition?
STATus:CALLProc:NTRansition?
```

Example

```
OUTPUT 714;"STAT:CALLP:PTR?"
ENTER 714;Register_value
```

Writing the Transition Filters

Syntax

```
STATus:CALLProc:PTRansition <integer>
STATus:CALLProc:NTRansition <integer>
```

Example

```
OUTPUT 714;"STAT:CALLP:PTR 256"
```

ManualsPlus.com

Reading the Event Register

Syntax

```
STATus:CALLProc:EVENt?
```

Example

```
OUTPUT 714;"STAT:CALLP:EVEN?"
ENTER 714;Register_value
```

Clearing the Event Register

The EVENT register is cleared whenever it is queried or whenever the Common Command *CLS is sent to the Test Set.

Reading the Enable Register

Syntax

```
STATus:CALLProc:ENABle?
```

Example

```
OUTPUT 714;"STAT:CALLP:ENAB?"
ENTER 714;Register_value
```

Writing the Enable Register

Syntax

```
STATus:CALLProc:ENABle <integer>
```

Example

```
OUTPUT 714;"STAT:CALLP:ENAB 256"
```

Clearing the Enable Register

The ENABLE register is cleared by writing to it with an integer value of zero.

ManualsPlus.com

Calibration Status Register Group

The Calibration Status Register Group contains information about the Test Set's hardware. This status group is accessed using the STATus commands. The Calibration Status Register Group uses 16-bit registers and includes a Condition Register, Transition Filters, an Event Register, an Enable Register, and a Summary Message. Refer to the **"Status Reporting Structure Overview" on page 275** for a discussion of status register operation. **Figure 14** shows the structure and STATus commands for the Calibration Status Register Group.

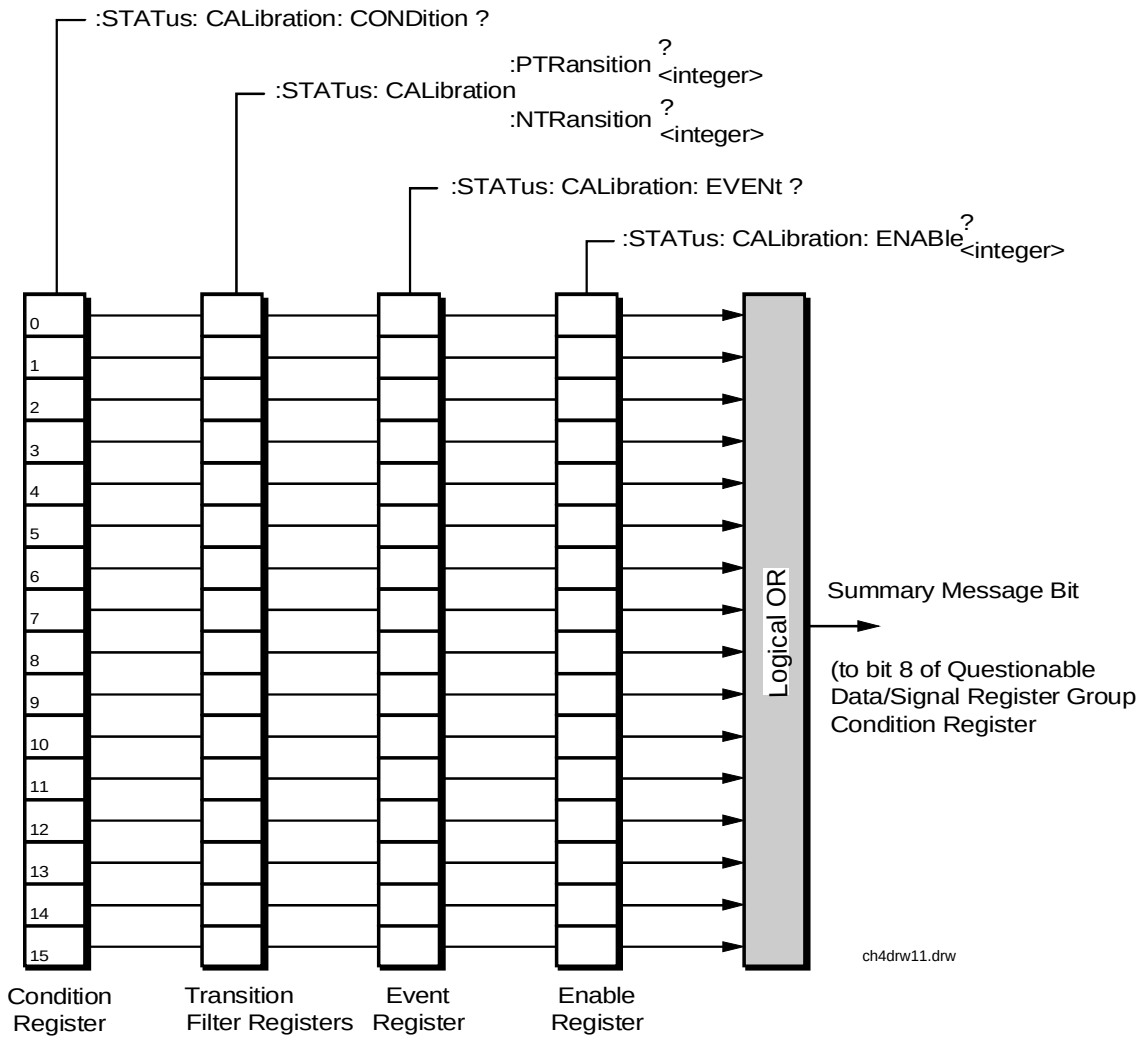

Figure 14 **Calibration Status Register Group**

ManualsPlus.com

Table 22 details the Calibration Status Register Group's Condition Register bit assignments.

Table 25 Calibration Status Register Group, Condition Register Bit Assignments

Bit Number	Binary Weighting	Condition	Comment
15	32768	Not Used (Always 0)	Defined by SCPI Version 1994.0
14	16384	Unused in Test Set	
13	8192	Unused in Test Set	
12	4096	Unused in Test Set	
11	2048	Unused in Test Set	
10	1024	Unused in Test Set	
9	512	Unused in Test Set	
8	256	Unused in Test Set	
7	128	Unused in Test Set	
6	64	Unused in Test Set	
5	32	Unused in Test Set	
4	16	TX Power Auto-Zero Failed	
3	8	Voltmeter Self-Calibration Failed	
2	4	Counter Self-Calibration Failed	
1	2	Sampler Self-Calibration Failed	
0	1	Spectrum Analyzer Self-Calibration Failed	

ManualsPlus.com

Accessing the Calibration Status Register Group's Registers

The following sections show the syntax and give programming examples (using the Instrument BASIC programming language) for the STATus commands used to access the Calibration Status Register Group's registers.

Reading the Condition Register

Syntax

```
STATus:CALibration:CONDition?
```

Example

```
OUTPUT 714;"STAT:CAL:COND?"
ENTER 714;Register_value
```

Reading the Transition Filters

Syntax

```
STATus:CALibration:PTRansition?
STATus:CALibration:NTRansition?
```

Example

```
OUTPUT 714;"STAT:CAL:PTR?"
ENTER 714;Register_value
```

Writing the Transition Filters

Syntax

```
STATus:CALibration:PTRansition <integer>
STATus:CALibration:NTRansition <integer>
```

Example

```
OUTPUT 714;"STAT:CAL:PTR 256"
```

Reading the Event Register Syntax

```
STATus:CALibration:EVENt?
```

Example

```
OUTPUT 714;"STAT:CAL:EVEN?"
ENTER 714;Register_value
```

ManualsPlus.com

Clearing the Event Register

The EVENT register is cleared whenever it is queried or whenever the Common Command *CLS is sent to the Test Set.

Reading the Enable Register

Syntax

```
STATus:CALibration:ENABle?
```

Example

```
OUTPUT 714;"STAT:CAL:ENAB?"
ENTER 714;Register_value
```

Writing the Enable Register

Syntax

```
STATus:CALibration:ENABle <integer>
```

Example

```
OUTPUT 714;"STAT:CAL:ENAB 256"
```

Clearing the Enable Register

The ENABLE register is cleared by writing to it with an integer value of zero.

ManualsPlus.com

Hardware Status Register #2 Group

The Hardware Status Register #2 Group contains information about the Test Set's hardware. This status group is accessed using the STATus commands. The Hardware Status Register #2 Group uses 16-bit registers and includes a Condition Register, Transition Filters, an Event Register, an Enable Register, and a Summary Message. Refer to the **"Status Reporting Structure Overview" on page 275** for a discussion of status register operation. **Figure 15** shows the structure and STATus commands for the Hardware Status Register #2 Group.

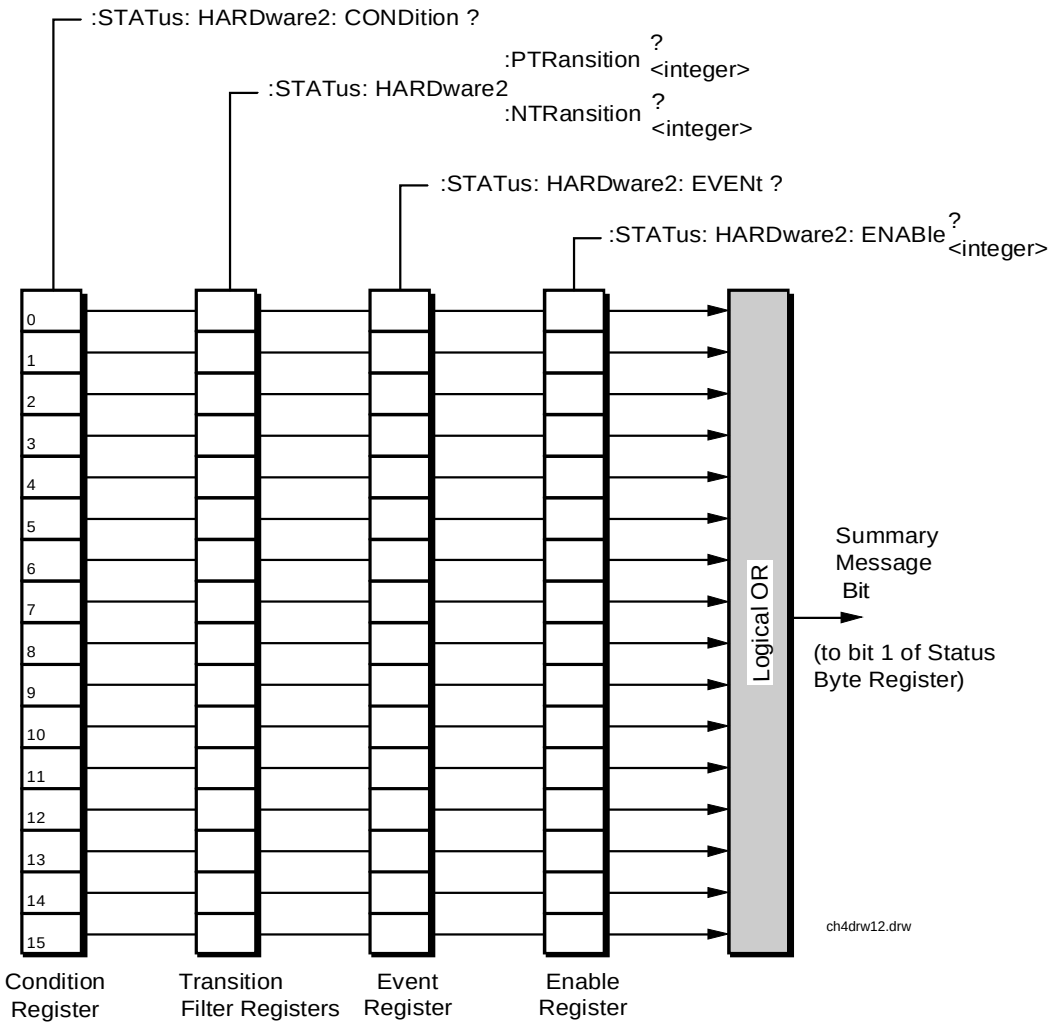

Figure 15 **Hardware Status Register #2 Group**

ManualsPlus.com

Table 26 shows the Hardware Status Register Group #2's Condition Register bit assignments.

Table 26 Hardware Status Register Group #2, Condition Register Bit Assignments

Bit Number	Binary Weighting	Condition	Comment
15	32768	Not Used (Always 0)	Defined by SCPI Version 1994.0
14	16384	Unused in Test Set	
13	8192	Unused in Test Set	
12	4096	Unused in Test Set	
11	2048	Inconsistent ACP Channel Bandwidth and Resolution Bandwidth	
10	1024	ACP Channel Bandwidth or Channel Offset Too Wide	
9	512	AFGen1 Frequency Exceeds Variable Frequency Notch Filter Range	
8	256	Requested Audio Voltage Too Large for AFGen2	
7	128	Requested FM Deviation Too Large for RF Generator Frequency	
6	64	Requested Simultaneous AM and FM Modulation	Simultaneous AM and FM modulation is not allowed.
5	32	Audio Input Level Auto Ranging Error	
4	16	RF Input Level Auto Ranging Error	
3	8	RF Input Frequency Auto Tuning Error	
2	4	RF Gen/RF Anl/RF Offset Frequency Combination Not Possible	(RF Gen Tune Freq) - (RF Anal Tune Freq) not equal to (RF Offset Freq)
1	2	RF Generator Amplitude Level Too High for Selected Output Port	
0	1	Spectrum Analyzer Reference Level Too High/ Low For Selected Input Port	

ManualsPlus.com

Accessing the Hardware Status Register #2 Group's Registers

The following sections show the syntax and give programming examples (using the Instrument BASIC programming language) for the STATus commands used to access the Hardware Status Register #2 Group's registers.

Reading the Condition Register

Syntax

```
STATus:HARDware2:CONDition?
```

Example

```
OUTPUT 714;"STAT:HARD2:COND?"
ENTER 714;Register_value
```

Reading the Transition Filters

Syntax

```
STATus:HARDware2:PTRansition?
STATus:HARDware2:NTRansition?
```

Example

```
OUTPUT 714;"STAT:HARD2:PTR?"
ENTER 714;Register_value
```

Writing the Transition Filters

Syntax

```
STATus:HARDware2:PTRansition <integer>
STATus:HARDware2:NTRansition <integer>
```

Example

```
OUTPUT 714;"STAT:HARD2:PTR 256"
```

ManualsPlus.com

Reading the Event Register

Syntax

```
STATus:HARDware2:EVENt?
```

Example

```
OUTPUT 714;"STAT:HARD2:EVEN?"
ENTER 714;Register_value
```

Clearing the Event Register

The EVENT register is cleared whenever it is queried or whenever the Common Command *CLS is sent to the Test Set.

Reading the Enable Register

Syntax

```
STATus:HARDware2:ENABle?
```

Example

```
OUTPUT 714;"STAT:HARD2:ENAB?"
ENTER 714;Register_value
```

Writing the Enable Register

Syntax

```
STATus:HARDware2:ENABle <integer>
```

Example

```
OUTPUT 714;"STAT:HARD2:ENAB 256"
```

Clearing the Enable Register

The ENABLE register is cleared by writing to it with an integer value of zero.

ManualsPlus.com

Hardware Status Register #1 Group

The Hardware Status Register #1 Group contains information about the Test Set's hardware. This status group is accessed using the STATus commands. The Hardware Status Register #1 Group uses 16-bit registers and includes a Condition Register, Transition Filters, an Event Register, an Enable Register, and a Summary Message. Refer to the **"Status Reporting Structure Overview" on page 275** section for a discussion of status register operation. **Figure 16** shows the structure and STATus commands for the Hardware Status Register #1 Group.

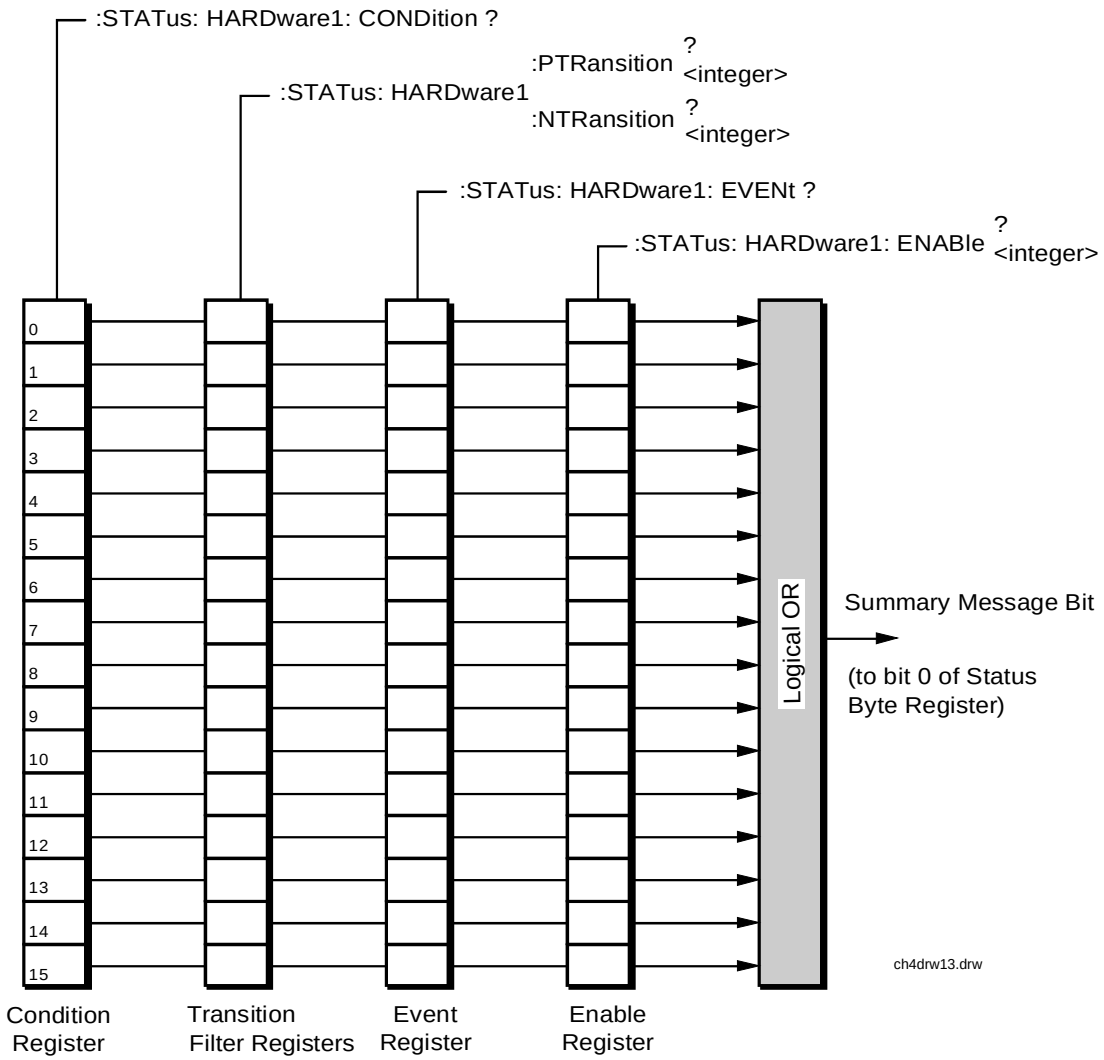

Figure 16 **Hardware Status Register #1 Group**

ManualsPlus.com

Table 27 shows the Hardware Status Register Group #1's Condition Register bit assignments.

Table 27 Hardware Status Register Group #1, Condition Register Bit Assignments

Bit Number	Binary Weighting	Condition	Comment
15	32768	Not Used (Always 0)	Defined by SCPI Version 1994.0
14	16384	Radio Interface Card Interrupt #2 Tripped	
13	8192	Radio Interface Card Interrupt #1 Tripped	
12	4096	Signaling Decoder Measurement Results Available	
11	2048	Signaling Decoder Input Level Too Low	
10	1024	Signaling Decoder is Measuring	
9	512	Signaling Decoder is Armed	
8	256	Signaling Encoder Sending Auxiliary Information	If the Signaling Mode selected has two information fields, such as the AMPS **`Filler`** and **`Message`** fields, and both fields are being sent, this bit will be set.
7	128	Signaling Encoder Sending Information	If the Signaling Mode selected has only one information field and the field is being sent, this bit will be set high. If the Signaling Mode selected has two information fields, such as the AMPS **`Filler`** and **`Message`** fields, and only one field is being sent, this bit will be set high. This bit is not active if the Signaling Encoder Mode is set to Function Generator.
6	64	Communication Register Group Summary Message	1 = one or more of the enabled events have occurred since the last reading or clearing of the Event Register.

ManualsPlus.com

Table 27 Hardware Status Register Group #1, Condition Register Bit Assignments (Continued)

Bit Number	Binary Weighting	Condition	Comment
5	32	Measurement Limit(s) Exceeded	This bit is set high if the Measurement High Limit or Low Limit is exceeded.
4	16	Power-up Self Test(s) Failed	
3	8	Overpower Protection Tripped	
2	4	Unused in Test Set	
1	2	External Mike Keyed	
0	1	External Battery Voltage Low	

Accessing the Hardware Status Register #1 Group's Registers

The following sections show the syntax and give programming examples (using the Instrument BASIC programming language) for the STATus commands used to access the Hardware Status Register #1 Group's registers.

Reading the Condition Register

Syntax

```
STATus:HARDware1:CONDition?
```

Example

```
OUTPUT 714;"STAT:HARD1:COND?"
ENTER 714;Register_value
```

ManualsPlus.com

Reading the Transition Filters

Syntax

```
STATus:HARDware1:PTRansition?
STATus:HARDware1:NTRansition?
```

Example

```
OUTPUT 714;"STAT:HARD1:PTR?"
ENTER 714;Register_value
```

Writing the Transition Filters

Syntax

```
STATus:HARDware1:PTRansition <integer>
STATus:HARDware1:NTRansition <integer>
```

Example

```
OUTPUT 714;"STAT:HARD1:PTR 256"
```

Reading the Event Register

Syntax

```
STATus:HARDware1:EVENt?
```

Example

```
OUTPUT 714;"STAT:HARD1:EVEN?"
ENTER 714;Register_value
```

ManualsPlus.com

Clearing the Event Register

The EVENT register is cleared whenever it is queried or whenever the Common Command *CLS is sent to the Test Set.

Reading the Enable Register

Syntax

```
STATus:HARDware1:ENABle?
```

Example

```
OUTPUT 714;"STAT:HARD1:ENAB?"
ENTER 714;Register_value
```

Writing the Enable Register

Syntax

```
STATus:HARDware1:ENABle <integer>
```

Example

```
OUTPUT 714;"STAT:HARD1:ENAB 256"
```

Clearing the Enable Register

The ENABLE register is cleared by writing to it with an integer value of zero.

ManualsPlus.com

Communicate Status Register Group

The Communicate Status Register Group contains information about the Test Set's hardware. This status group is accessed using the STATus commands. The Communicate Status Register Group uses 16-bit registers and includes a Condition Register, Transition Filters, an Event Register, an Enable Register, and a Summary Message. Refer to the **"Status Reporting Structure Overview" on page 275** for a discussion of status register operation. **Figure 17** shows the structure and STATus commands for the Communicate Status Register Group.

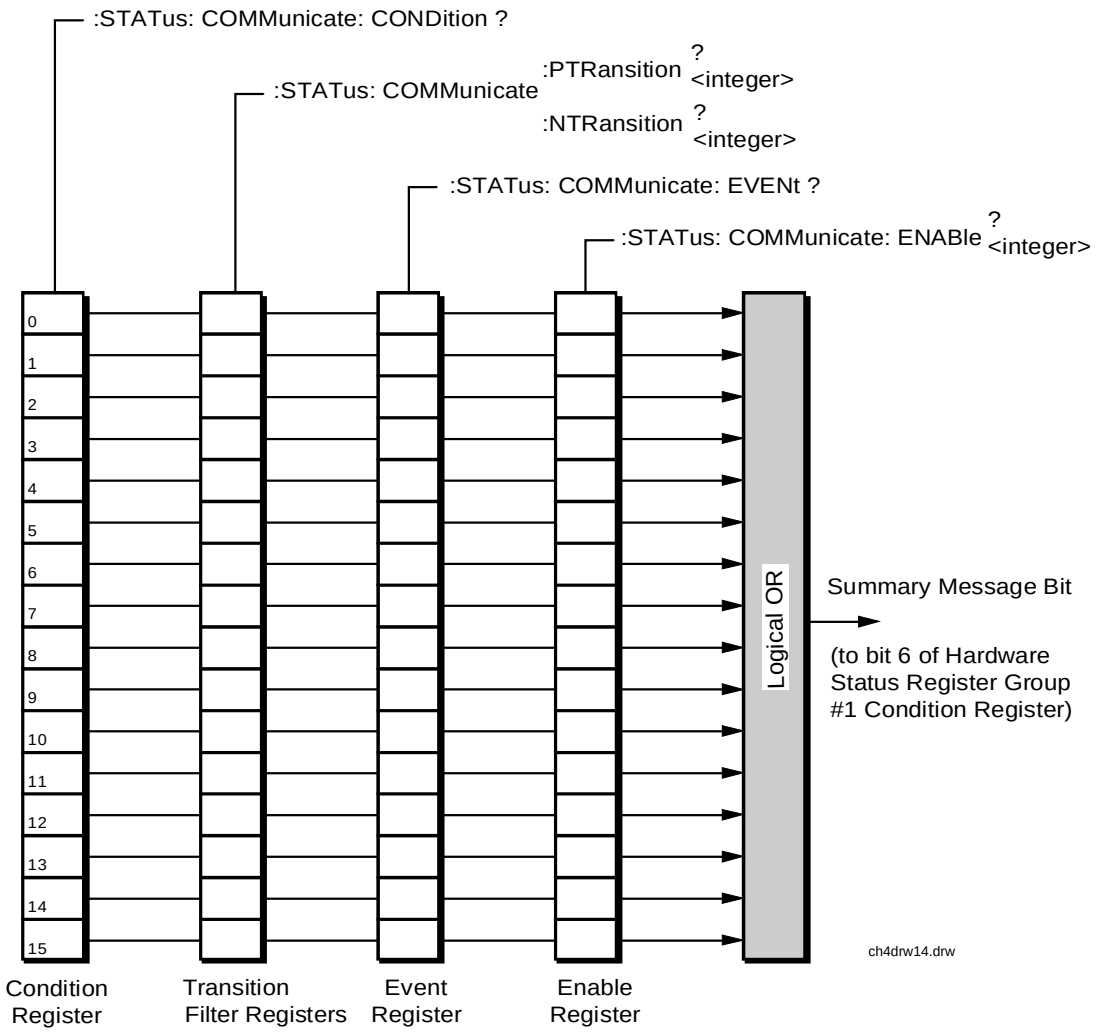

Figure 17 **Communicate Status Register Group**

ManualsPlus.com

Table 28 shows the Communicate Status Register Group's Condition Register bit assignments.

Table 28 Communicate Status Register Group, Condition Register Bit Assignments

Bit Number	Binary Weighting	Condition	Comment
15	32768	Not Used (Always 0)	Defined by SCPI Version 1994.0
14	16384	Unused in Test Set	
13	8192	Unused in Test Set	
12	4096	Unused in Test Set	
11	2048	Unused in Test Set	
10	1024	Unused in Test Set	
9	512	Unused in Test Set	
8	256	Unused in Test Set	
7	128	Unused in Test Set	
6	64	Unused in Test Set	
5	32	Unused in Test Set	
4	16	Unused in Test Set	
3	8	Unused in Test Set	
2	4	Unused in Test Set	
1	2	Top Box TX DSP Analyzer Communication Channel Failure	
0	1	Top Box RX DSP Analyzer Communication Channel Failure	

ManualsPlus.com

Accessing the Communicate Status Register Group's Registers

The following sections show the syntax and give programming examples (using the Instrument BASIC programming language) for the STATus commands used to access the Communicate Status Register Group's registers.

Reading the Condition Register

Syntax

```
STATus:COMMunicate:CONDition?
```

Example

```
OUTPUT 714;"STAT:COMM:COND?"
ENTER 714;Register_value
```

Reading the Transition Filters

Syntax

```
STATus:COMMunicate:PTRansition?
STATus:COMMunicate:NTRansition?
```

Example

```
OUTPUT 714;"STAT:COMM:PTR?"
ENTER 714;Register_value
```

Writing the Transition Filters

Syntax

```
STATus:COMMunicate:PTRansition <integer>
STATus:COMMunicate:NTRansition <integer>
```

Example

```
OUTPUT 714;"STAT:COMM:PTR 256"
```

ManualsPlus.com

Reading the Event Register

Syntax

```
STATus:COMMunicate:EVENt?
```

Example

```
OUTPUT 714;"STAT:COMM:EVEN?"
ENTER 714;Register_value
```

Clearing the Event Register

The EVENT register is cleared whenever it is queried or whenever the Common Command *CLS is sent to the Test Set.

Reading the Enable Register

Syntax

```
STATus:COMMunicate:ENABle?
```

Example

```
OUTPUT 714;"STAT:COMM:ENAB?"
ENTER 714;Register_value
```

Writing the Enable Register

Syntax

```
STATus:COMMunicate:ENABle <integer>
```

Example

```
OUTPUT 714;"STAT:COMM:ENAB 256"
```

Clearing the Enable Register

The ENABLE register is cleared by writing to it with an integer value of zero.

ManualsPlus.com

GPIB Service Requests

The Test Set is capable of generating a “service request” when it requires the Active Controller to take action. Service requests are generally made after the Test Set has completed a task (such as making a measurement) or when an error condition exists (such as an internal self-calibration has failed).

The mechanism by which the Active Controller detects these requests is the SRQ interrupt. Interrupts allow for efficient use of system resources, because the Active Controller may be executing a program until an SRQ interrupt occurs. If SRQ interrupts are enabled in the Active Controller, the occurrence of an interrupt can initiate a program branch to a routine which “services” the interrupt (executes some remedial action). The operating and/or programming manuals for each controller describe the controller’s capability to set up and respond to SRQ interrupts.

This section describes the steps necessary to properly configure the Test Set to request service using the Service Request (SRQ) function.

ManualsPlus.com

Setting Up and Enabling SRQ Interrupts

Test Set status information is maintained in eight register groups. Information in each register group is summarized into a Summary Message. All of the Summary Messages are, in turn, summarized into the Status Byte Register, either directly to specific bit positions in the Status Byte Register as shown in **Table 29**, or indirectly through another register group (refer to **"Status Reporting" on page 275** for a detailed discussion of the register groups and status reporting).

Bits in the Status Byte Register can be used to generate a Service Request (SRQ)

Table 29 Status Byte Register Bit Assignments

Bit Position	Binary Weighting	Assignments
7	128	Operation Status Register Group Summary Message
6	64	Request Service (RQS) message when read by serial poll, *or*, Master Summary Status (MSS) message when read by STB? command
5	32	Standard Event Status Bit (ESB) Summary Message
4	16	Output Queue Message Available (MAV) Summary Message
3	8	Questionable Data/Signal Register Group Summary Message
2	4	Unused in Test Set
1	2	Hardware #2 Status Register Group Summary Message
0	1	Hardware #1 Status Register Group Summary Message

message by enabling the associated bit in the Service Request Enable Register. When an enabled service request condition exists, the Test Set sends the Service Request message (SRQ) on the GPIB bus and reports that it has requested service by setting the Request Service (RQS) bit in the Status Byte register to the TRUE, logic 1, state. When read by a serial poll, the RQS bit is cleared (set to logic 0) so that the RQS message will be FALSE if the Test Set is polled again before a new reason for requesting service has occurred.

ManualsPlus.com

Service Request Enable Register

Service request enabling allows the application programmer to select which Summary Messages in the Status Byte Register may cause a service request. The Service Request Enable Register, illustrated in **Figure 18**, is an 8-bit register that enables corresponding Summary Messages in the Status Byte Register.

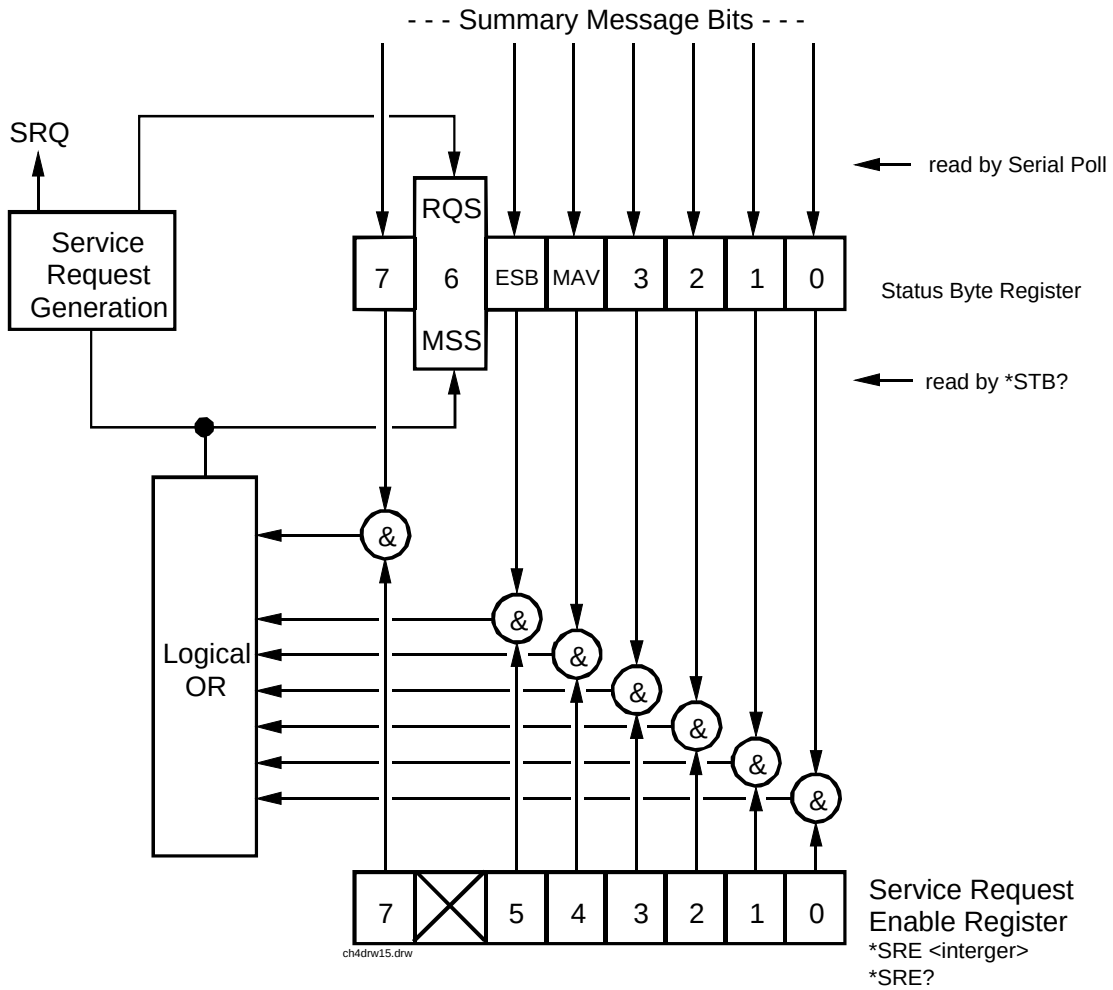

Figure 18 **Service Request Enable Register**

ManualsPlus.com

Reading the Service Request Enable Register

The Service Request Enable Register is read with the *SRE? Common Command. The *SRE? query allows the programmer to determine the current contents (bit pattern) of the Service Request Enable Register. The Test Set responds to the *SRE? query by placing the binary-weighted decimal value of the Service Request Enable Register bit pattern into the Output Queue. The decimal value of the bit pattern will be a positive integer in the range 0 to 255. The response data is obtained by reading the Output Queue into a numeric variable, integer or real.

Example program

```
10 INTEGER Srv_rqs_enab_rg
20 OUTPUT 714;"*SRE?"
30 ENTER 714;Srv_rqs_enab_rg
40 PRINT Srv_rqs_enab_rg
50 END
```

Example response

```
18
```

Writing the Service Request Enable Register

The Service Request Enable Register is written with the *SRE Common Command. The *SRE command sets the bit pattern (bits 0-5 and 7) of the Service Request Enable Register. The Service Request Enable Register allows the programmer to select which condition(s), as defined by bits 0-5 and 7 of the Status Byte Register, will generate a Service Request on the GPIB bus. The Test Set always ignores bit 6 (binary weight 64) of the bit pattern set by the *SRE command.

The bit pattern set by the *SRE command is determined by selecting the desired condition(s) from the Status Byte Register, setting the value of the bit position(s) to a logical one, setting the value of all non-selected bit positions to a logical zero, and sending the binary-weighted decimal equivalent of bits 0-5 and 7 after the *SRE command. For example, if the programmer wished to have the occurrence of a message available in the Output Queue (bit position 4 in the Status Byte Register) and the occurrence of a condition in the Hardware# 2 Status Register (bit position 1 in the Status Byte Register) to generate a Service Request on the GPIB bus, the binary-weighted decimal value of the bit pattern for the Service Request Enable Register would be determined as shown in **Table 30**.

ManualsPlus.com

Table 30 Determining the Service Request Enable Register Bit Pattern

Bit Position	7	6	5	4	3	2	1	0	
Logical Value	0	X	0	1	0	0	1	0	X = ignored by the Test Set
Binary Weighting	128	X	32	16	8	4	2	1	X = ignored by the Test Set
Decimal Value	0+	0+	0+	16+	0+	0+	2+	0	= 18

Example

```
OUTPUT 714;"*SRE 18"
```

NOTE: The decimal value of the bit pattern must be a positive integer in the range of 0 to 255. Sending a negative number or a number greater than 255 causes an **`HP-IB Error: -222 Data out of range`**.

Clearing the Service Request Enable Register

The Service Request Enable Register is cleared by sending the *SRE Common Command with a decimal value of zero. Clearing the Service Request Enable Register turns off service requests.

ManualsPlus.com

Procedure for Generating a Service Request

The following steps outline a generalized procedure for properly setting up the Test Set to generate a Service Request (SRQ) message to the Active Controller. This procedure does not include instructions for setting up the Active Controller to respond to the Service Request message generated by the Test Set. Refer to the operating and/or programming manuals for each controller for information describing the controller's capability to set up and respond to SRQ interrupts.

For register groups with Condition Registers and Transition Filters start at step 1. For register groups with no Condition Register or Transition Filters start at step 5.

1. Determine which conditions, as defined by their bit positions in the Register Group Condition Register, should cause the Summary Message to be set TRUE if they occur.
2. Determine the polarity of the bit-state transition which will indicate that the condition has occurred.
3. Set the Register Group Transition Filters to the correct polarity to pass the bit-state transition to the Event Register.
4. Go to step 6.
5. Determine which conditions, as defined by their bit positions in the Register Group Event Register, should cause the Summary Message to be set TRUE if they occur.
6. Set the correct bits in the Register Group Enable Register to generate the Summary Message if the condition has been latched into the Register Group Event Register.
7. If the Summary Message is a bit in a Register Group that is not the Status Byte Register go to step 1.
8. Set the correct bits in the Service Request Enable Register for all Register Group Summary Messages selected in steps 1 through 6.

ManualsPlus.com

Example Program to Set Up and Service an SRQ Interrupt

The following Instrument BASIC program was written for an HP® 9000 Series 300 Controller and a Test Set. The program assumes that the Test Set is the only instrument on the bus. The program sets up an interrupt from the Standard Event Status Register Group, the Calibration Status Register Group, and the Hardware Status Register #1 Group. For demonstration purposes the program is written to stay in a dummy loop waiting for an interrupt from the Test Set

```
10 OPTION BASE 1
20 COM/Io_names/INTEGER Inst_address,Std_event_reg,Calibration_reg
30 COM /Io_names/ INTEGER Hardware1_reg,Srq_enab_reg,Status_byte,Event_reg
40   !
50   ! Define instrument address
60   Inst_address=714
70   !
80 PRINTER IS CRT
90 CLEAR SCREEN
100   !
110   ! Reset the Test Set to bring it to a known state
120   OUTPUT Inst_address;"*RST"
130   !
140   ! Clear the Test Set status reporting system
150   OUTPUT Inst_address;"*CLS"
160   !
170   ! Set up the desired interrupt conditions in the Test Set:
180   !
190   ! 1) Standard Event Status Register Group
200   !    Event register conditions which will set the Summary Message
210   !    TRUE if they occur:
220   !    Bit 5: Command Error              decimal value = 2^5 = 32
230   !    Bit 4: Execution Error            decimal value = 2^4 = 16
240   !    Bit 3: Device Dependent Error     decimal value = 2^3 = 8
250   !    Bit 2: Query Error                decimal value = 2^2 = 4
260   !
270   Std_event_reg=32+16+8+4
280   !
290   !    Set up the Standard Event Status Enable Register to generate the
300   !    Summary Message
310   !
320   OUTPUT Inst_address;"*ESE";Std_event_reg
330   !
340   ! 2) Calibration Status Register Group
350   !    Condition register conditions which will set the Summary Message
360   !    TRUE if they occur:
370   !    Bit 4: TX Auto-zero failed          decimal value = 2^4 = 16
380   !    Bit 3: Voltmeter Self-cal failed    decimal value = 2^3 = 8
390   !    Bit 2: Counter Self-cal failed      decimal value = 2^2 = 4
400   !    Bit 1: Sampler Self_cal failed      decimal value = 2^1 = 2
```

ManualsPlus.com


```
410   !    Bit 0: Spec Anal Self-cal failed    decimal value = 2^0 = 1
420   !
430   Calibration_reg=16+8+4+2+1
440   !
450   !    Set the Transition Filters to allow only positive transitions in
460   !    the assigned condition(s) to pass to the Event Register
470   !
480   OUTPUT Inst_address;"STAT:CAL:PTR";Calibration_reg
490   OUTPUT Inst_address;"STAT:CAL:NTR 0"
500   !

510  ! Set up the Calibration Status Register Group Enable Register to
520  ! generate the Summary Message.
530  !
540  OUTPUT Inst_address;"STAT:CAL:ENAB";Calibration_reg
550  !
560  ! The Calibration Status Register Group Summary Message is passed to
570  !  the Status Byte Register through Bit 8 in the Questionable
580  !  Data/Signal Register Group Condition Register. The Questionable
590  !  Data/Signal Register Group must be configured to set its Summary
600  !  Message TRUE if the Summary Message from the Calibration Status
610  !  Register Group is TRUE. Therefore Bit 8 (2^8=256) in the Questionable
620  !  Data/Signal Register Group Enable Register must be set HIGH.
630  !
640  OUTPUT Inst_address;"STAT:QUES:ENAB 256"
650  !
660  !  3) Hardware Status Register #1 Group
670  !    Condition register conditions which will set the Summary Message
680  !    TRUE if they occur:
690  !    Bit 5: Measurement limits exceeded     decimal value = 2^5 = 32
700  !    Bit 4: Power-up Self-test failed       decimal value = 2^4 = 16
710  !    Bit 3: Overpower protection tripped    decimal value = 2^3 = 8
720  !
730  Hardware1_reg=32+16+8
740  !
750  !    Set the Transition Filters to allow only positive transitions in
760  !    the assigned condition(s) to pass to the Event Register
770  !
780  OUTPUT Inst_address;"STAT:HARD1:PTR";Hardware1_reg
790  OUTPUT Inst_address;"STAT:HARD1:NTR 0"
800  !
810  !    Set up the Hardware Status Register #1 Group Enable Register to
820  !    generate the Summary Message.
830  !
840  OUTPUT Inst_address;"STAT:HARD1:ENAB";Hardware1_reg
850  !
860  ! 4) Set the correct Summary Message bit(s) in the Service Request
870  !    Enable Register to generate a Service Request (SRQ) if the
880  !    Summary Message(s) become TRUE.
890  !    Bit 5 = Standard Event Status Register Summary Message
```

ManualsPlus.com


```
900  !                                                  decimal value = 2^5 = 32
910  !    Bit 3 = Questionable Data/Signal Register Group Summary Message
920  !                                                  decimal value = 2^3 = 8
930  !    Bit 0 = Hardware Status Register #1 Group Summary Message
940  !                                                  decimal value = 2^0 = 1
950  !
960  Srq_enab_reg=32+8+1
970  OUTPUT Inst_address;"*SRE";Srq_enab_reg
980  !
990  ! 5) Set up the Active Controller to respond to an SRQ interrupt:
1000  !    Call subprogram Check_interrupt if an SRQ condition exists on select
1010  !    code 7. The interrupt priority level is set to 15 (highest level).
1020  !
1030  ON INTR 7,15 CALL Srvice_interupt
1040  !
1050  ! 6) Enable interrupts on select code 7:
1060  !    The interface mask is set to a value of 2 which enables interrupts on
1070  !    the GPIB bus when the SRQ line is asserted.
1080  !
1090  ENABLE INTR 7;2
1100  !
1110  ! Start of the dummy loop:
1120  !
1130  LOOP
1140     DISP "I am sitting in a dummy loop."
1150     END LOOP
1160     !
1170  END
1180  !
1190  Srvice_interupt:SUB Srvice_interupt
1200  !
1210  OPTION BASE 1
1220  COM /Io_names/ INTEGER Inst_address,Std_event_reg,Calibration_reg
1230  COM / Io_names/ INTEGER Hardware1_reg,Srq_enab_reg,Status_byte,Event_reg
1240  !
1250  !Turn off interrupts while processing the current interrupt.
1260   OFF INTR 7
1270  !
1280  !Conduct a SERIAL POLL to read the Status Byte and clear the SRQ:
1290  !
1300   Status_byte=SPOLL(Inst_address)
1310  !
1320  ! Determine which Register Group(s) caused the interrupt. Since three
1330  ! were enabled, all three must be checked:
1340  !
1350   IF BIT(Status_byte,5) THEN GOSUB Srvice_std_evnt
1360   IF BIT(Status_byte,3) THEN GOSUB Srvice_calib
1370   IF BIT(Status_byte,0) THEN GOSUB Srvice_hard1
1380  !
1390  ! Re-enable the interrupt before leaving the service routine
```

ManualsPlus.com


```
1400  !
1410      ENABLE INTR 7;2
1420SUBEXIT
1430!
1440  Srvice_std_evnt:!
1450   ! This routine would determine which bit(s) in the Standard Event
1460   ! Status Register are TRUE, logic 1, and take appropriate action.
1470   ! NOTE: Read the Event Register to clear it. If the Event Register is
1480   ! not cleared it will NOT latch another event, thereby preventing
1490   ! the Test Set from generating another SRQ.
1500   !
1510 OUTPUT Inst_address;"*ESR?"
1520ENTER Inst_address;Event_reg
1530RETURN
1540!
1550   Service_calib:!
1560! This routine would determine which bit(s) in the Calibration Status
1570! Register Group Event Register are TRUE, logic 1, and take
1580! appropriate action.
1590! NOTE: Read the Event Register to clear it. If the Event Register is
1600! not cleared it will NOT latch another event from the Condition
1610! Register, thereby preventing the Test Set from generating another SRQ.
1620!
1630OUTPUT Inst_address;"STAT:CAL:EVEN?"
1640ENTER Inst_address;Event_reg
1650RETURN
1660

!1670  Srvice_hard1:!
1680   ! This routine would determine which bit(s) in the Hardware Status
1690   ! Register #1 Group Event Register are TRUE, logic 1, and take
1700   ! appropriate action.
1710   ! NOTE: Read the Event Register to clear it. If the Event Register is
1720   ! not cleared it will NOT latch another event from the Condition
1730   ! Register, thereby preventing the Test Set from generating another SRQ.
1740   !
1750 OUTPUT Inst_address;"STAT:HARD1:EVEN?"
1760       ENTER Inst_address;Event_reg
1770   RETURN
1780   !
1790    SUBEND
```

ManualsPlus.com

Instrument Initialization

This section discusses the various methods available to the programmer to initialize the Test Set to a known state.

With over 22 instruments utilizing greater than 25 screens containing hundreds of fields which can be programmed through the GPIB bus, a hard copy list of the default condition for every field in every instrument screen would be cumbersome. The recommended method of determining the default condition for every field in a particular instrument screen is to select the PRESET key, display the instrument screen of interest and view the contents of the fields.

Apart from the individual instruments it is important, from a programmatic perspective, to know the default conditions of the I/O configuration of the Test Set and how it may be affected by the various methods of initialization. Seven screens are used to control the I/O configuration of the Test Set:

CONFIGURE screen
I/O CONFIGURE screen
PRINT CONFIGURE screen
TESTS (Main Menu) screen
TESTS (Execution Conditions) screen
TESTS (External Devices) screen
TESTS (Printer Setup) screen

The following sections discuss how the various methods of initialization affect these seven screens as well as the Status Reporting Structure of the Test Set.

ManualsPlus.com

Methods of Initialization

There are six methods of initializing the Test Set:

Power On Reset
Front panel PRESET key
*RST IEEE 488.2 Common Command
Device Clear (DCL) GPIB Bus Command
Selected Device Clear (SDC) GPIB Bus Command
Interface Clear (IFC) GPIB Bus Command

When the Test Set is initialized some fields are “restored” (put back to their default state), some fields are “maintained” (kept at their current state or value), and some fields are “initialized” (returned to their default value).

The following sections discuss the effects each of the six initialization methods has on the Test Set.

Power-On Reset

The Power-On Reset is accomplished by applying or cycling AC/DC power to the Test Set.

For the CONFIGURE, PRINT CONFIGURE, TESTS (Execution Conditions), TESTS (Printer Setup) and I/O CONFIGURE screens, **Table 31** lists the fields which are restored/initialized when the Test Set AC/DC power is cycled. The restored state or initialized value is listed below the field name. Fields which are not listed are maintained at their current value, whatever that may happen to be. All fields in the TESTS (Main Menu) screen and the TESTS (External Devices) screen are maintained at their current state/value. The current state/value of the maintained fields can be ascertained programmatically.

ManualsPlus.com

Table 31 Screen Fields Restored/Initialized During Power-On Reset

CONFIGURE Screen Fields	PRINT CONFIGURE Screen Fields	TESTS (Execution Conditions) Screen Fields	TESTS (Printer Setup) Screen Fields	I/O CONFIGURE
RX/TX Cntl `Auto/PTT`	Print Title field is cleared.	Test output location: `Crt`	Test output location: `Crt`	Save/Recall `Internal`
RF Offset `Off`		Results output: `All`	Results output: `All`	
(Gen)-(Anl) `0.000000`		If Unit Under Test Fails: `Continue`		
Range Hold `Auto All`		Test Procedure run mode: `Continuous`		
Notch Coupl `None`				
RF Display `Freq`				
RF Chan Std `MS AMPS`				
User Def Base Freq `800.000000`				
Chan Space `30.0000`				
(Gen)-(Anl) `45.000000`				
RF Level Offset `Off`				
RF In/Out `0.0`				
Duplex Out `0.0`				
Antenna In `0.0`				

ManualsPlus.com

The Power-On Reset condition in the Test Set was specifically designed to configure the instruments for manual testing of an FM radio. The Power-On Reset default display screen is the RX TEST screen. Other operational characteristics are also affected by the Power-On Reset as follows:

- The Power-up self-test diagnostics are performed.
- The Contents of the SAVE/RECALL registers are not affected.
- All pending operations are aborted.
- Measurement triggering is set to TRIG:MODE:SETT FULL;RETR REP
- All Enable registers are cleared: Service Request, Standard Event, Communicate, Hardware #1, Hardware #2, Operation, Calibration, Call Processing and Questionable Data/Signal.
- All Negative Transition Filter registers are initialized to all zeros: Communicate, Hardware #1, Hardware #2, Operation, Calibration, Call Processing and Questionable Data/Signal.
- All Positive Transition Filter registers are initialized to all ones: Communicate, Hardware #1, Hardware #2, Operation, Calibration, Call Processing and Questionable Data/Signal.
- Any previously received Operation Complete command (*OPC) is cleared.
- Any previously received Operation Complete query command (*OPC?) is cleared.
- Calibration data is not affected.
- The GPIB interface is reset (any pending Service Request is cleared.)
- The contents of the RAM memory are unaffected.
- The Test Set’s display screen is in the UNLOCKED state.

Front-panel PRESET Key

The Front-panel Reset is accomplished by pressing the PRESET key on the front panel of the Test Set.

For the CONFIGURE, PRINT CONFIGURE, TESTS (Execution Conditions), TESTS (Printer Setup) and I/O CONFIGURE screens, **Table 32** lists the fields which are restored/initialized when the front-panel PRESET key is pressed. The restored state or initialized value is listed below the field name. Fields which are not listed are maintained at their current value, whatever that may happen to be. All fields in the TESTS (Main Menu) screen and the TESTS (External Devices) screen are maintained at their current state/value. The current state/value of the maintained fields can be ascertained programmatically.

ManualsPlus.com

Table 32 Screen Fields Restored/Initialized During Front Panel Reset

CONFIGURE Screen Fields	PRINT CONFIGURE Screen Fields	TESTS (Execution Conditions) Screen Fields	TESTS (Printer Setup) Screen Fields	I/O CONFIGURE
RX/TX Cntl `Auto/PTT`	Print Title field is cleared.	Test output location: `Crt`	Test output location: `Crt`	Save/Recall `Internal`
RF Offset `Off`		Results output: `All`	Results output: `All`	
(Gen)-(Anl) `0.000000`		If Unit Under Test Fails: `Continue`		
Range Hold `Auto All`		Test Procedure run mode: `Continuous`		
Notch Coupl `None`				
RF Display `Freq`				
RF Chan Std `MS AMPS`				
User Def Base Freq `800.000000`				
Chan Space `30.0000`				
(Gen)-(Anl) `45.000000`				
RF Level Offset `Off`				
RF In/Out `0.0`				
Duplex Out `0.0`				
Antenna In `0.0`				

ManualsPlus.com

The Front-panel Reset condition in the Test Set was specifically designed to configure the instruments for manual testing of an FM radio. The Front-panel Reset default display screen is the RX TEST screen. Other operational characteristics are also affected by the Front-panel Reset as follows:

- All pending operations are aborted.
- Measurement triggering is set to TRIG:MODE:SETT FULL;RETR REP.
- Any previously received Operation Complete command (*OPC) is cleared.
- Any previously received Operation Complete query command (*OPC?) is cleared.
- The Test Set's display screen is in the UNLOCKED state.
- The Power-up self-test diagnostics are not performed.
- The GPIB interface is not reset (any pending Service Request is not cleared.)
- The Contents of the SAVE/RECALL registers are not affected.
- Calibration data is not affected.
- All Enable registers are unaffected: Service Request, Standard Event, Communicate, Hardware #1, Hardware #2, Operation, Calibration, Call Processing and Questionable Data/Signal.
- All Negative Transition Filter registers are unaffected: Communicate, Hardware #1, Hardware #2, Operation, Calibration,Call Processing and Questionable Data/Signal.
- All Positive Transition Filter registers are unaffected: Communicate, Hardware #1, Hardware #2, Operation, Calibration,Call Processing and Questionable Data/Signal.
- The contents of the RAM memory are unaffected.

*RST IEEE 488.2 Common Command

The *RST Reset is accomplished by sending the *RST Common Command to the Test Set through the GPIB bus.

For the CONFIGURE, PRINT CONFIGURE, TESTS (Execution Conditions), TESTS (Printer Setup) and I/O CONFIGURE screens, **Table 33** lists the fields which are restored/initialized when the *RST command is received. The restored state or initialized value is listed below the field name. Fields which are not listed are maintained at their current value, whatever that may happen to be. All fields in the TESTS (Main Menu) screen and the TESTS (External Devices) screen are maintained at their current state/value. The current state/value of the maintained fields can be ascertained programmatically.

ManualsPlus.com

Table 33 Screen Fields Restored/Initialized During *RST Reset

CONFIGURE Screen Fields	PRINT CONFIGURE Screen Fields	TESTS (Execution Conditions) Screen Fields	TESTS (Printer Setup) Screen Fields	I/O CONFIGURE
RX/TX Cntl `Auto/PTT`	Print Title field is cleared	Test output location: `Crt`	Test output location: `Crt`	Save/Recall `Internal`
RF Offset `Off`		Results output: `All`	Results output: `All`	
(Gen)-(Anl) `0.000000`		If Unit Under Test Fails: `Continue`		
Range Hold `Auto All`		Test Procedure run mode: `Continuous`		
Notch Coupl `None`				
RF Display `Freq`				
RF Chan Std `MS AMPS`				
User Def Base Freq `800.000000`				
Chan Space `30.0000`				
(Gen)-(Anl) `45.000000`				
RF Level Offset `Off`				
RF In/Out `0.0`				
Duplex Out `0.0`				
Antenna In `0.0`				

ManualsPlus.com

The *RST Reset condition in the Test Set was specifically designed to configure the instruments for manual testing of an FM radio. The *RST Reset default display screen is the RX TEST screen. Other operational characteristics are also affected by the *RST reset as follows:

- All pending operations are aborted.
- Measurement triggering is set to TRIG:MODE:SETT FULL;RETR REP.
- Any previously received Operation Complete command (*OPC) is cleared.
- Any previously received Operation Complete query command (*OPC?) is cleared.
- The Test Set's display screen is in the UNLOCKED state.
- The Power-up self-test diagnostics are not performed.
- The Contents of the SAVE/RECALL registers are not affected.
- Calibration data is not affected.
- The GPIB interface is not reset (any pending Service Request is not cleared).
- All Enable registers are unaffected: Service Request, Standard Event, Communicate, Hardware #1, Hardware #2, Operation, Calibration,Call Processing and Questionable Data/Signal.
- All Negative Transition Filter registers are unaffected: Communicate, Hardware #1, Hardware #2, Operation, Calibration,Call Processing and Questionable Data/Signal.
- All Positive Transition Filter registers are unaffected: Communicate, Hardware #1, Hardware #2, Operation, Calibration,Call Processing and Questionable Data/Signal.
- The contents of the RAM memory are unaffected.
- The contents of the Output Queue are unaffected.
- The contents of the Error Queue are unaffected.

ManualsPlus.com

Device Clear (DCL) GPIB Bus Command

The Device Clear (DCL) Reset is accomplished by sending the DCL message to the Test Set through the GPIB bus.

The DCL command clears the Input Buffer and Output Queue, clears any commands in process, puts the Test Set into the Operation Complete idle state, and prepares the Test Set to receive new commands. The DCL bus command does not change any settings or stored data (except as noted previously), interrupt front panel I/O, interrupt any Test Set operation in progress (except as noted previously), or change the contents of the Status Byte Register (other than clearing the MAV bit as a consequence of clearing the Output Queue).

The DCL bus command has no effect on the I/O CONFIGURE, CONFIGURE, PRINT CONFIGURE, or TESTS (Main Menu, Execution Conditions, External Devices, Printer Setup) screens.

Other operational characteristics are also affected by the DCL bus command as follows:

- The Power-up self-test diagnostics are not performed.
- The GPIB interface is not reset (any pending Service Request is not cleared)
- Measurement triggering is not affected.
- Calibration data is not affected.
- The Contents of the SAVE/RECALL registers are not affected.
- All Enable registers are unaffected: Service Request, Standard Event, Hardware #1, Hardware #2, Operation, Calibration,Call Processing and Questionable Data/Signal.
- All Negative Transition Filter registers are unaffected: Hardware #1, Hardware #2, Operation, Calibration,Call Processing and Questionable Data/Signal.
- All Positive Transition Filter registers are unaffected: Hardware #1, Hardware #2, Operation, Calibration,Call Processing and Questionable Data/Signal.
- The contents of the RAM memory are unaffected.
- The contents of the Error Queue are unaffected.
- The state of the Test Set’s display screen is unaffected.

ManualsPlus.com

Selected Device Clear (SDC) GPIB Bus Command

The Selected Device Clear (SDC) Reset is accomplished by sending the SDC message to the Test Set through GPIB. The Test Set responds to the Selected Device Clear (SDC) and the Device Clear (DCL) bus commands equally. Refer to the **"Device Clear (DCL) GPIB Bus Command" on page 347** for a description of the effects of the SDC Reset.

Interface Clear (IFC) GPIB Bus Command

The Interface Clear (IFC) Reset is accomplished by having the Active Controller send the ABORT message to the GPIB bus (ABORT message = IFC bus control line TRUE for 100 ms).

The IFC bus command unconditionally terminates all GPIB bus activity and the Test Set is unaddressed.

The IFC bus command has no effect on the I/O CONFIGURE, CONFIGURE, PRINT CONFIGURE, or TESTS (Main Menu, Execution Conditions, External Devices, Printer Setup) screens.

Other operational characteristics are also affected by the IFC bus command as follows:

- The Power-up self-test diagnostics are not performed.
- The GPIB interface is not reset (any pending Service Request is not cleared).
- The Contents of the SAVE/RECALL registers are not affected.
- Measurement triggering is not affected.
- Calibration data is not affected .
- All Enable registers are unaffected: Service Request, Standard Event, Hardware #1, Hardware #2, Operation, Calibration,Call Processing and Questionable Data/Signal.
- All Negative Transition Filter registers are unaffected: Hardware #1, Hardware #2, Operation, Calibration,Call Processing and Questionable Data/Signa.l
- All Positive Transition Filter registers are unaffected: Hardware #1, Hardware #2, Operation, Calibration,Call Processing and Questionable Data/Signal.
- The contents of the RAM memory are unaffected.
- The contents of the Error Queue are unaffected.
- The contents of the Output Queue are unaffected.
- The state of the Test Set display screen is not affected

ManualsPlus.com

Passing Control

Communications on the GPIB bus are accomplished according to a precisely defined set of rules (IEEE 488.1 and 488.2 Standards). Communication (data transfer) is accomplished by designating one device to be a talker (source of data or commands) and designating one or more devices to be listeners (receivers of data or commands). The device on the bus responsible for designating talkers and listeners is the Controller.

The structure of the GPIB bus allows for more than one Controller to be connected to the bus at the same time. As a means of ensuring that orderly communications can be established on power-up or when communications have failed, the rules state that only one Controller can unconditionally demand control of the bus (through the IFC line). This controller is referred to as the System Controller. There can be only one System Controller connected to the bus at any time.

As a means of ensuring orderly communications in environments where more than one controller is connected to the bus, the rules state that only one Controller can be actively addressing talkers and listeners at any given time. This device is referred to as the Active Controller. The System Controller is the default Active Controller on power-up or after a bus reset. Controllers which are not the Active Controller are referred to as Non-Active Controllers. The Active Controller can pass control of device addressing to one of the Non-Active Controllers. Additionally, Non-Active Controllers can request control from the Active Controller.

The process by which the Active Controller passes device addressing responsibility to a Non-Active Controller is referred to as Passing Control. The Active Controller must first address the prospective new Active Controller to Talk, after which it sends the Take Control Talker (TCT) message across the bus. If the other Controller accepts the message it assumes the role of Active Controller and the previous Active Controller becomes a Non-Active Controller.

The Test Set has bus control capability (Active/Non-Active Controller). Additionally the Test Set can be also be configured as the System Controller. By definition then, the Test Set has the capability to demand control, pass control, accept control, and request control of the bus depending upon its configuration, its current operating mode, and the system configuration. Many possibilities for passing control among several controllers on the same bus exist. Attempting to identify all the possible techniques of passing control in such a system is beyond the scope of this document (refer to the IEEE 488.1 and 488.2 Standards for additional information).

ManualsPlus.com

Configuring the Test Set as the System Controller

To configure the Test Set as a System Controller, select the I/O CONFIGURE screen, position the cursor to the **`Mode`** field using the Cursor Control knob, highlight the **`Mode`** field by pushing the Rotary Knob, select **`Control`** from the **`Choices`** menu. As a consequence of setting the Test Set to be the System Controller it will also become the Active Controller. The letter C appears in the upper-right corner of the display to indicate that the Test Set is now the Active Controller.

If the Test Set is the only controller on the bus it must be configured as the System Controller. If the Test Set is not the only controller on the bus, then whether or not it is configured as the System Controller would depend upon three issues:

1. whether or not other controllers have System Controller capability
2. which controller will be the Active Controller upon power-up
3. which Controller will be monitoring the bus to determine if communications have failed (only the System Controller can unconditionally demand control of the bus and reset it to a known state using the IFC line)

Ensure that only one Controller connected to the bus is configured as the System Controller or bus conflicts will occur.

When Active Controller Capability is Required

The Test Set must be the Active Controller on the bus under the following conditions:

1. whenever the Test Set needs to control any device connected to the GPIB bus, such as an external disk drive, an external printer, or an external instrument
2. whenever a screen image is printed to an external GPIB printer
3. Whenever an instrument configuration is saved or recalled from an external GPIB disk drive
4. Whenever running any Agilent 11807 Radio Test Software package which uses an external GPIB device such as a disk drive, a printer, or an instrument
5. Whenever running any IBASIC program which uses an external GPIB device such as a disk drive, a printer, or an instrument

ManualsPlus.com

Passing Control to the Test Set

Control is passed to the Test Set when it is addressed to TALK and then receives the Take Control Talker (TCT) command. The programming or controller command which implements the pass control protocol as outlined in the IEEE 488.1 and 488.2 Standards is language/controller specific. Refer to the appropriate language/controller documentation for specific implementations.

Before passing control to the Test Set the Active Controller should send the Test Set the address to use when passing control back. This is accomplished using the *PCB Common Command. The *PCB command tells the Test Set which address should be used when passing control back to another bus controller. Before passing bus control to the Test Set, the currently active controller can use the *PCB command to tell the Test Set where to send the Take Control (TCT) command when the Test Set is ready to give up active control of the bus. The command is followed by a number which contains the bus address of the device that should become the next active controller. The number must round to an integer in the range 0 to 30 decimal. The command may be followed by two numbers. The first will be used as the primary address, the second as the secondary address of the next active controller.

ManualsPlus.com

Passing Control Back to Another Controller

The Test Set has two methods of passing control back to another controller: 1) automatically and 2) using the IBASIC PASS CONTROL command from an IBASIC program. The two methods are described in the following sections.

Passing Control Back Automatically

The Test Set will automatically pass control back to the controller whose address was specified in the *PCB Common Command or to a default address of 0 (decimal) if no *PCB command was received. Control will automatically be passed under the following conditions:

Test Set is the Active Controller and an IBASIC Program is Running

- The IBASIC program running in the Test Set is PAUSED.
- The IBASIC program running in the Test Set finishes executing.
- An IBASIC RESET occurs while the IBASIC program is running.
- Control is passed back immediately if the System Controller executes a bus reset (IFC).

Test Set is the Active Controller and no IBASIC Program is Running

- Control will be passed back within 10 seconds of receiving bus control if no controller commands are executed (such as printing a screen image to an GPIB printer or saving/recalling an instrument configuration from an GPIB disk drive).
- Control is passed back immediately if the System Controller executes a bus reset (IFC).
- Control is passed back at the completion of a controller command (such as printing a screen image to an GPIB printer or saving/recalling an instrument configuration from an GPIB disk drive).

Passing Control Back Using IBASIC PASS CONTROL Command

The Test Set will pass control back to another Controller when the IBASIC PASS CONTROL command is issued while an IBASIC program is running on the built-in IBASIC Controller. Refer to the *HP Instrument BASIC User's Handbook* for a complete description of the IBASIC PASS CONTROL command.

ManualsPlus.com

Requesting Control using IBASIC

The Test Set has the capability to request control of the bus from the Active Controller from a running IBASIC program using the IBASIC command EXECUTE ("REQUEST_CONTROL"). When the EXECUTE ("REQUEST_CONTROL") command is executed from a running IBASIC program, the Request Control bit, bit 1, of the Test Set's Standard Event Status Register is set to the TRUE, logic 1, condition. The Active Controller detects the request in the Test Set's Standard Event Status Register either as a result of an SRQ indication by the Test Set or by some polling routine which periodically checks bit 1 of the Standard Event Status Register of all potential controllers on the bus. The Active Controller would then send the Test Set the address to which the Test Set is to later pass control using the *PCB Common Command. The Active Controller would then pass control to the Test Set.

Pass Control Examples

The following examples illustrate how pass control could be implemented in two of the common Test Set operating configurations:

1. Test Set controlled by an external controller, and
2. Test Set running an IBASIC program with an external Controller connected to GPIB bus.

Passing Control While the Test Set is Controlled by an External Controller

This example illustrates passing control between the Test Set and an external controller while the Test Set is being controlled by the external controller. In this mode the Test Set is NOT configured as the System Controller. Generally speaking, in this mode of operation the Test Set is considered just another device on the GPIB bus and its Controller capabilities are not used. However, it may be desirable, under certain conditions, to print a Test Set screen to the GPIB printer for documentation or program debugging purposes. With manual intervention it is possible to have the Active Controller pass control to the Test Set, have the operator select and print the desired screen, and then pass control back to the formerly Active Controller. The following steps outline a procedure for accomplishing this task. The example is based upon having an HP® 9000 Series 300 Workstation as the external controller connected to the Test Set through the GPIB bus. Further, it assumes that the GPIB interface in the HP® 9000 Controller is set to the default select code of 7 and address of 21.

ManualsPlus.com

1. If a program is running on the HP® 9000 Workstation, PAUSE the program.
2. Put the Test Set in local mode (press the LOCAL key on the front panel).
3. Configure the Test Set to print to the GPIB printer using the PRINT CONFIGURE screen.
4. Configure the Test Set to display the screen to be printed.
5. From the keyboard of the HP® 9000 Workstation type in and execute the following command:

   OUTPUT 714;"*PCB 21"

   This command tells the Test Set the address of the Controller to pass control back to.
6. From the keyboard of the HP® 9000 Workstation type in and execute the following command:

   PASS CONTROL 714

   This command passes control to the Test Set.
7. Put the Test Set in local mode (press the LOCAL key on the front panel).
8. Press SHIFT , then TESTS on the front panel of the Test Set to print the screen.
9. After the Test Set finishes printing the screen it will automatically pass control back to the HP® 9000 Workstation.

Passing Control Between an External Controller and the Test Set with an IBASIC Program Running

The following example program illustrates the passing of control between an external Controller and the Test Set while an IBASIC program is running in the Test Set. The example is based upon having an HP® 9000 Series 300 Workstation as the external controller connected to the Test Set through the GPIB bus. Further, it is based on the assumption that the GPIB interface in the HP® 9000 Controller is set to the default select code of 7 and address of 21. In this example, the Test Set is NOT configured as the System Controller. This example illustrates the situation where the External Controller would perform the functions listed below.

1. Sends commands to the Test Set to cause a program to be loaded off of a Memory Card which is in the Test Set's front panel Memory Card slot.
2. Sends commands to the Test Set to run the program just loaded.
3. Passes control to the Test Set and then does other work while the Test Set is making measurements.

   When the Test Set is finished making measurements and has data available for the External Controller, it passes control back to the External Controller.
4. The External Controller then requests the data from the Test Set.

ManualsPlus.com

The following program would run in the External Controller:

```
10    COM /Gpib_names/ INTEGER Internal_gpib,Inst_address,Cntrl_state
20    COM /Cntrl_names/ Ext_cntrl_addrs,Int_cntrl_addrs
30    COM /Io_names/ INTEGER Printer_addrs,Pwr_suply_addrs
40    COM /Io_values/ REAL Meas_power,Prog_state$[80],Prog_name$[50]
50    COM /Reg_vals/ INTEGER Status_byte,Stdevnt_reg_val
60    !
70    Internal_gpib=7
80    Ext_cntrl_addrs=14
90    Int_cntrl_addrs=21
100   Printer_addrs=1
110   Pwr_suply_addrs=26
120   Inst_address=(Internal_gpib*100)+Ext_cntrl_addrs
130   Prog_name$="PASCTLEX:INTERNAL,4"
140   !
150   PRINTER IS CRT
160   !
170   ! Set the Controller up to respond to an SRQ from Test Set
180   ! The interrupt is generated by the Request Control bit in the Test Set
190   ON INTR Internal_gpib CALL Pass_control
200   ENABLE INTR Internal_gpib;2
210   !
220   ! Bring Test Set to known state.
230   OUTPUT Inst_address;"*RST"
240   !
250   ! Set the Test Set to cause SRQ interrupt on Request Control
260   OUTPUT Inst_address;"*CLS"
270   OUTPUT Inst_address;"*ESE 2"
280   OUTPUT Inst_address;"*SRE 32"
290   !
300   ! Load the desired program into the Test Set from Memory Card
305 OUTPUT Inst_address;"DISP TIB” ! Display the IBASIC screen
310   OUTPUT Inst_address;"PROG:EXEC 'DISP """&"Loading program."&"""'"
320   OUTPUT Inst_address;"PROG:EXEC 'GET """&Prog_name$&"""'"
330   OUTPUT Inst_address;"PROG:EXEC 'DISP """&""&"""'"
340   !
350   ! Run the program in the Test Set
360   OUTPUT Inst_address;"PROG:EXEC 'RUN'"
370   !
380   REPEAT
390     STATUS Internal_gpib,3;Cntrl_state
400     DISP "WAITING TO PASS CONTROL TO THE Test Set."
410   UNTIL NOT BIT(Cntrl_state,6)
420   !
430   REPEAT
440     STATUS Internal_gpib,3;Cntrl_state
450     DISP "WAITING FOR CONTROL BACK FROM THE Test Set"
460   UNTIL BIT(Cntrl_state,6)
470   !
```

ManualsPlus.com


```
480   ! Data is ready in the Test Set
490   OUTPUT Inst_address;"PROG:NUMB? Meas_power"
500   ENTER Inst_address;Meas_power
510   PRINT "Measured power = ";Meas_power
520   !
530   DISP "Program finished."
540   END
550   !
560   SUB Pass_control
570   !
580     COM /Gpib_names/ INTEGER Internal_gpib,Inst_address,Cntrl_state
590     COM /Cntrl_names/ Ext_cntrl_addrs,Int_cntrl_addrs
600     COM /Io_names/ INTEGER Printer_addrs,Pwr_suply_addrs
610     COM /Io_values/ REAL Meas_power,Prog_state$[80],Prog_name$[50]
620     COM /Reg_vals/ INTEGER Status_byte,Stdevnt_reg_val
630   !
640     OFF INTR Internal_gpib
650     Status_byte=SPOLL(Inst_address)
660     IF NOT BIT(Status_byte,5) THEN
670       PRINT "SRQ for unknown reason. Status Byte = ";Status_byte
680       STOP
690     END IF
700    !
710    ! Tell Test Set where to pass control back to
720     OUTPUT Inst_address;"*PCB";Int_cntrl_addrs
730     !
740     ! Put Test Set in LOCAL mode so front panel keys function
750     LOCAL Inst_address
760     !
770     PASS CONTROL Inst_address
780   !
790     ENABLE INTR Internal_gpib;2
800   !
810   SUBEND
```

ManualsPlus.com

The following IBASIC program would be loaded off the Memory Card and run in the Test Set:

```
10      COM /gpib_names/ INTEGER Internal_gpib,External_gpib
20      COM /Cntrl_names/ Ext_cntrl_addrs,Int_cntrl_addrs
30      COM /Io_names/ INTEGER Printer_addrs,Pwr_suply_addrs
40      COM /Io_values/ REAL Meas_power
50     !
60      Internal_gpib=800
70      External_gpib=700
80      Ext_cntrl_addrs=21
90      Int_cntrl_addrs=14
100     Printer_addrs=1
110     Pwr_suply_addrs=26
120    !
130     OUTPUT Internal_gpib;"*RST"
140     CLEAR SCREEN
150     PRINTER IS CRT
160    !
170     EXECUTE ("REQUEST_CONTROL")
180    !
190 Try_again:   !
200     ON ERROR GOTO Not_actve_cntrl
210     DISP "WAITING TO GET CONTROL"
220 OUTPUT External_gpib;"" !If OUTPUT successful then Active Controller
230                         !If OUTPUT not successful then not Active Controller
240     DISP "TEST SET NOW ACTIVE CONTROLLER."
250     CALL Start_program
260    !
270 Pass_back: !
280     DISP "PASSING CONTROL BACK"
290    !Control is passed back automatically when the program stops
300    !Control is passed back to address specified by *PCB command
310     DISP "PROGRAM FINISHED"
320     STOP
330    !
340 Not_actve_cntrl:   !
350     OFF ERROR
360     DISP "CHECKING FOR ERROR"
370     IF ERRN=173 THEN
380       GOTO Try_again
390     ELSE
400       PRINT "ERROR =";ERRN
410       STOP
420     END IF
430    !
440     END
450    !
460     SUB Start_program
470    !
480       COM /Gpib_names/ INTEGER Internal_gpib,External_gpib
490       COM /Cntrl_names/ Ext_cntrl_addrs,Int_cntrl_addrs
500       COM /Io_names/ INTEGER Printer_addrs,Pwr_suply_addrs
510       COM /Io_values/ REAL Meas_power
520    !
530       PRINT "SETTING POWER SUPPLY"
540       OUTPUT External_gpib+Pwr_suply_addrs;"IMAX 8;ISET 5"
550       OUTPUT External_gpib+Pwr_suply_addrs;"VMAX 15;VSET 13.2"
560    !
570       PRINT "SETTING UP INTERNAL INSTRUMENTS"
580       OUTPUT Internal_gpib;"RFG:FREQ 850.030 MHz;AMPL -40 dBm"
590       OUTPUT Internal_gpib;"AFG1:FREQ 3 KHZ;DEST 'FM';FM 3 KHZ"
```

ManualsPlus.com


```
600      OUTPUT Internal_gpib;"DISP TX;MEAS:RFR:POW?"
610      ENTER Internal_gpib;Meas_power
620   !
630      OUTPUT External_gpib+Printer_addrs;"Measured power = ";Meas_power
640     !
650      OUTPUT External_gpib+Pwr_suply_addrs;"VSET 0"
660     !
670    SUBEND
```

ManualsPlus.com

6

Memory Cards/Mass Storage

This chapter contains information about using the mass storage devices available in the Test Set for storing and retrieving program and data files. Access to the mass storage devices in the Test Set was designed primarily for the built-in IBASIC Controller. The Test Set's mass storage devices are not directly accessible by an external controller. The programming examples used in this chapter apply only to the Test Set's built-in IBASIC Controller.

NOTE: Indirect access to the Test Set's mass storage devices is available through the PROGram:EXECute command. Refer to the *Standard Commands for Programmable Instruments (SCPI)* for generic information on the PROGram:EXECute command.

The IBASIC programming examples are provided to assist the programmer in understanding the use of the Test Set's mass storage devices. They are not intended to be a comprehensive description of the IBASIC mass storage commands and procedures. For detailed information on IBASIC commands, refer to the *Instrument BASIC User's Handbook*.

ManualsPlus.com

Default File System

Default File System

The Test Set's default file system is the Microsoft Disk Operating System (DOS). The DOS file system is used on IBM compatible personal computers. See **"DOS File Naming Conventions" on page 371** for further information on the DOS file system. This implies that the Test Set expects a DOS formatted media for operations as shown in **Table 34 on page 6 361**. If a LIF formatted media is used for the activities outlined in **Table 34** erroneous operation will result, with the exception of IBASIC mass storage operations. The IBASIC file system supports both LIF and DOS. The media format (DOS or LIF) is determined automatically by the IBASIC file system when the mass storage device is first accessed and the appropriate format is used from then on for IBASIC mass storage operations. File system operation defaults to DOS upon exiting from IBASIC.

NOTE: The IBASIC INITIALIZE command defaults to LIF format. Any media (RAM Disk, SRAM Cards, External Hard Disk Drive, or 3.5-inch floppy) formatted using the default conditions of the INITIALIZE command will be the LIF format and will be unusable in the Test Set , except for IBASIC mass storage operations. Refer to **"Initializing Media for DOS or LIF File System" on page 374** for information on formatting media for the DOS file system.

The IBASIC WILDCARDS command defaults to WILDCARDS OFF. To use DOS wildcards while in IBASIC execute the WILDCARDS DOS command upon entering the IBASIC environment.

ManualsPlus.com

Table 34 Test Set Default File System

Activity	Default File System
Manual front-panel operations **a.** SAVE/RECALL register access **b.** TESTS Subsystem file access **c.** Signaling Decoder NMT file access	DOS
IBASIC mass storage operations LIF is default, DOS is also supported	LIF
GPIB commands for **a.** SAVE/RECALL register access **b.** TESTS Subsystem file access **c.** Signaling Decoder NMT file access	DOS
TESTS Subsystem **a.** Procedure files **b.** Library files **c.** Code files	DOS

ManualsPlus.com

Mass Storage Device Overview

As shown in **Figure 19 on page 363**, the Test Set has both internal and external mass storage devices. There are five types of mass storage devices in the Test Set:

- On-board random-access memory disk (RAM disk) located on the Test Set's internal memory board
- On-board read-only memory disk (ROM disk) located on the Test Set's internal memory board
- External disk drives connected to the Test Set's external GPIB
- Internal static random access memory (SRAM) cards which are inserted into the Test Set's front-panel Memory Card slot
- Internal read-only memory (ROM) cards (also called One-Time Programmable or OTP cards) which are inserted into the Test Set's front-panel Memory Card slot

NOTE: The hardware for reading-from and writing-to memory cards is located internal to the Test Set. Therefore, the static random access memory (SRAM) cards and the read only memory (ROM) cards are considered internal to the Test Set even thought the physical media must be inserted into the Test Set's front-panel Memory Card slot.

ManualsPlus.com

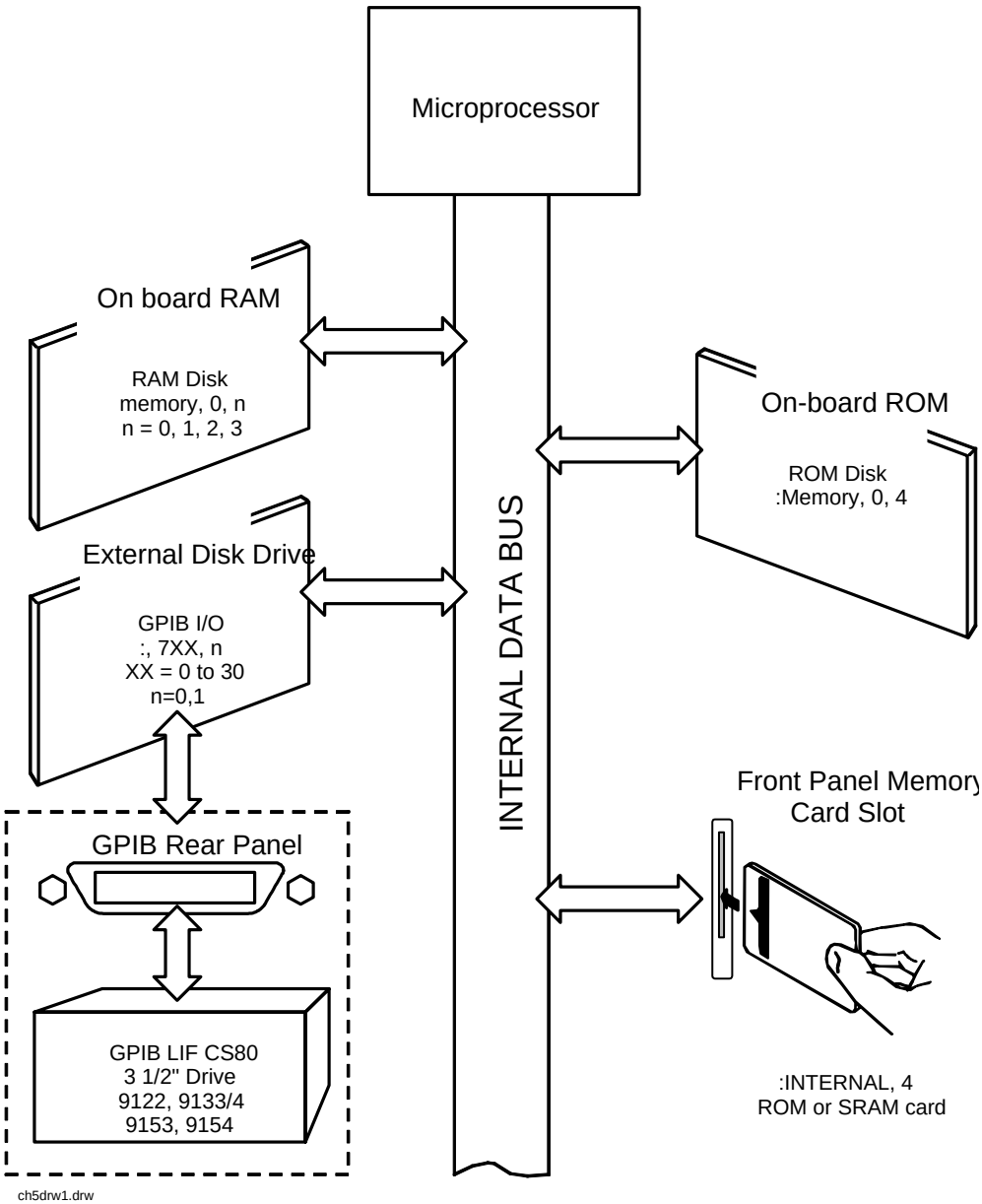

Figure 19 **Internal and External Mass Storage Devices**

ManualsPlus.com

Programs and data can be retrieved from any of these mass storage devices. Programs and data can only be stored to RAM disk, external disk, or SRAM card mass storage devices. The IBASIC file system supports both the LIF (Agilent Technologies's Logical Interchange Format) file system and the MS-DOS (Microsoft Disk Operating System) file system.

The following paragraphs provide an overview of the five types of mass storage devices.

Table 35 RAM Disk Mass Storage Overview

Mass Storage Name	Mass Storage Type	Physical Location	Mass Storage Volume Specifier	Media Type	Supported File System(s)
RAM Disk	Non-volatile random access memory	Test Set's internal memory board	":MEMORY,0,unit number" unit number = 0, 1, 2, or 3 default = 0	N/A	LIF, DOS

Typical Uses

- Temporary program and data storage
- Temporary Save/Recall register storage

Comments

- Easily overwritten or erased
- Not recommended for permanent program or data storage
- Unit 0 can be overwritten by the RAM_MANAGER utility program (ROM Disk)
- Unit 1 can be overwritten by the COPY_PL utility program (ROM Disk)
- Units 2 and 3 are not overwritten by any ROM Disk utility program

ManualsPlus.com

Table 36 ROM Disk Mass Storage Overview

Mass Storage Name	Mass Storage Type	Physical Location	Mass Storage Volume Specifier	Media Type	Supported File System(s)
ROM Disk	Read-only memory	Test Set internal memory board	":MEMORY,0,4"	N/A	DOS

Typical Uses

- Permanent storage of factory supplied utility programs
- Permanent storage of factory supplied diagnostic programs

Comments

- Non-erasable
- Not available for user program or data storage
- Not available for Save/Recall register storage

Table 37 External Disk Mass Storage Overview

Mass Storage Name	Mass Storage Type	Physical Location	Mass Storage Volume Specifier	Media Type	Supported File System(s)
External Disk	GPIB Hard disk drive GPIB Floppy disk drive	Connected to Test Set's external GPIB	":,7xx,n" xx = device address (0-30) n = unit number (range device dependent)	Hard disk = NA Floppy disk 3.5-in DS Disk	LIF, DOS

Typical Uses

- Permanent program and data storage
- Permanent Save/Recall register storage

Comments

- High capacity (device dependent)
- Slowest access time of Test Set's mass storage devices

ManualsPlus.com

Table 38 SRAM Card Mass Storage Overview

Mass Storage Name	Mass Storage Type	Physical Location	Mass Storage Volume Specifier	Media Type	Supported File System(s)
SRAM Memory Card	Static Random-Access Memory Card	Plugs into Memory Card slot on front panel of Test Set	":INTERNAL,4"	PCMCIA Type 1 or Type 2 SRAM Memory Card	LIF, DOS

Typical Uses

- Semi-permanent program and data storage
- Semi-permanent Save/Recall register storage

Comments

- Low capacity
- Contents retained by on-card lithium battery
- Contents lost if on-card battery removed while card not in Test Set Memory Card slot
- Recommended as primary mass storage device for program and data storage

ManualsPlus.com

Table 39 ROM Card Mass Storage Overview

Mass Storage Name	Mass Storage Type	Physical Location	Mass Storage Volume Specifier	Media Type	Supported File System(s)
ROM or OTP Memory Card	Read-only Memory Card	Plugs into Memory Card slot on front panel of Test Set	":INTERNAL,4"	PCMCIA Type 1 or Type 2 EPROM Memory Card	DOS

Typical Uses

- Permanent storage of factory supplied application programs
- Permanent storage of factory supplied utility programs
- Permanent storage of factory supplied diagnostic programs

Comments

- Non-erasable
- Not available for user program or data storage
- Not available for Save/Recall register storage

ManualsPlus.com

Default Mass Storage Locations

Built-in IBASIC Controller

The default mass storage location for the built-in IBASIC Controller is the front panel memory card slot (mass storage volume specifier ":INTERNAL,4") after any of the following conditions:

- power-up
- initializing RAM with the SERVICE screen's **`RAM Initialize`** function

The mass storage location for the built-in IBASIC Controller can be changed using the MASS STORAGE IS command. Refer to the *Instrument BASIC Users Handbook* for further information on the MASS STORAGE IS command.

Save/Recall Registers

The default mass storage location for the Save/Recall registers is the Test Set's internal RAM (no mass storage volume specifier) after any of the following conditions:

- power-up
- initializing RAM with the SERVICE screen's **`RAM Initialize`** function
- resetting the Test Set using the front-panel PRESET key
- resetting the Test Set using the *RST GPIB Common Command

The mass storage location for Save/Recall registers can be changed using the **`Save/Recall`** field in the I/O CONFIGURE screen. The default mass storage volume specifiers for the Save/Recall register mass storage locations are as follows:

- Internal selection - (no mass storage volume specifier, registers are saved to allocated RAM space)
- Card selection (not changeable) - ":INTERNAL,4"
- RAM selection (not changeable) - ":MEMORY,0,0"
- Disk selection - the **`External Disk Specification`** field in the TESTS (External Devices) screen.

ManualsPlus.com

External Disk Drive

The default mass storage volume specifier for the external disk drive is set using the **`External Disk Specification`** field in the TESTS (External Devices) screen.

TESTS Subsystem

The default mass storage location for the TESTS Subsystem is set using the **`Select Procedure Location:`** field on the TESTS (Main Menu) screen. The default mass storage volume specifiers for the TESTS Subsystem mass storage locations are as follows:

- Card selection (not changeable) - ":INTERNAL,4"
- ROM selection (not changeable) - ":MEMORY,0,4"
- RAM selection (not changeable) - ":MEMORY,0,0"
- Disk selection - the **`External Disk Specification`** field in the TESTS (External Devices) screen.

Selecting the Mass Storage Location

The IBASIC mass storage location is selected using the IBASIC Mass Storage Is command. The mass storage volume specifier for the desired mass storage location is appended to the Mass Storage Is command. Refer to the *Instrument BASIC User's Handbook* for further information regarding the Mass Storage Is command.

For example, to change the default mass storage location to RAM Disk unit 2, execute the following command:

Mass Storage Is ":MEMORY,0,2"

The Mass Storage Is command is keyboard and program executable; however, any changes made are lost when the Test Set is turned off or when the SERVICE screen's **`RAM Initialize`** function is executed.

ManualsPlus.com

Mass Storage Access

Program and data files stored on the Test Set's various mass storage locations can be selectively accessed from the following screens:

- The TESTS (IBASIC Controller) screen.

  Any type of file can be accessed from this screen, either through an IBASIC program or the IBASIC command line.

- The TESTS (Main Menu) screen using the **`Select Procedure Location:`** and **`Select Procedure Filename:`** fields.

  Only *procedure* files shipped with Agilent 11807 software or procedure files created using the TESTS (Save/Delete Procedure) screen of the TESTS Subsystem can be accessed using these fields. When created, procedure file names are prefixed with a *.PRC* file extension (FM_TEST.PRC).

  A corresponding *code* file - prefixed with a *.PGM* (FM_TEST.PGM) - must reside on the same media for the procedure to work. Refer to the TESTS screen description in the User's Guide for further information on the TESTS Subsystem.

- The TESTS (Save/Delete Procedure) screen using the **`Select Procedure Location:`** and **`Enter Procedure Filename:`** fields.

  This screen is used to create "procedure" files. When created, procedure file names are prefixed with a *.PRC* file extension (FM_TEST.PRC).

- The Signaling Decoder screen in NMT mode.

  Only user-written NMT tests can be accessed from this screen. NMT test files must be saved with a *.NMT* file extension (NMT_1.NMT) on the Test Set.

Save/Recall register files, stored on the Test Set's various mass storage locations, can be accessed using the front-panel SAVE and RECALL keys.

ManualsPlus.com

DOS and LIF File System Considerations

Program and data files can be stored and retrieved from IBASIC using either the DOS or LIF file system. The media format (DOS or LIF) is determined automatically by the IBASIC file system when the mass storage device is first accessed, and the appropriate format is used from then on. DOS and LIF use different file naming conventions. In addition, the Test Set uses certain file naming conventions which are unique to the Test Set. Unexpected file operation can occur if proper consideration is not given to the file naming conventions.

File Naming Conventions

LIF File Naming Conventions

The LIF file system is used by Instrument BASIC on the HP® 9000 Series 200/300 Workstations. It is a flat file system, which means that it has no subdirectories. The LIF file system allows up to 10-character file names which are case sensitive. The LIF file system preserves the use of uppercase and lowercase characters for file storage and retrieval. For example, the file names File1, FILE1, file1 and FiLe1 could represent different files. LIF files cannot start with a space, and any file name longer than 10 characters is considered an error.

NOTE: The Test Set's file system does not support the HFS (hierarchical file system) used with Instrument BASIC. Therefore, no directory path information can be used during mass storage operations with LIF files.

DOS File Naming Conventions

The DOS file system is used on IBM compatible personal computers. The DOS file system is hierarchical, which means it supports subdirectories. The DOS file system allows up to 8-character file names with an optional extension of up to 3 characters. The file name is separated from the extension (if it exists) with a period (.). DOS file names are case independent. The characters are stored as upper case ASCII in the DOS directory but the files may be referenced without regard to case. The DOS file system always converts any lowercase characters to uppercase when files are stored. For example, the file names File1 , FILE1 , file1 and FiLe1 all represent the single DOS file FILE1 .

ManualsPlus.com

The period (.) may appear in the name but only to separate the file name from the extension. The period is not considered part of the file name itself. If the name portion of a DOS file name is longer than 8 characters, it is truncated to 8 characters and no error is generated. Similarly, if the extension is longer than 3 characters, it is truncated to 3 characters and no error is given.

Test Set File Naming Conventions

The Test Set's TESTS Subsystem uses the following file naming conventions:

- The *.PGM* extension is used to indicate a code file and is automatically appended onto the file name when the program code file is stored for use by the TESTS Susbsystem.
- The *.PRC* extension is used to indicate a procedure file and is appended onto the file name when the file is stored by the TESTS Subsystem
- The *.LIB* extension is used to indicate a library file and is appended onto the file name when the file is created for use with the TESTS Subsystem

The Test Set's Save/Recall register subsystem uses the following file naming convention:

The *.SAV* extension is used to indicate a stored Save/Recall register file and is appended onto the file name when the file is created

The Test Set's Signaling Decoder in NMT mode uses the following file naming convention:

- The *.NMT* extension is used to indicate a stored NMT file and is appended onto the file name when the file is created

Test Set File Entry Field Width

The TESTS Subsystem and the Save/Recall register subsystem have fields into which the operator enters a file name. These fields are used by the operator to enter the name of a file to be stored or loaded. The width of these fields is 8 characters and was chosen to support the DOS file naming convention of 8 characters. Consequently these fields will *not* hold a 10-character file name which is allowed in the LIF file system.

ManualsPlus.com

Potential File Name Conflicts

Unexpected file operation can occur if proper consideration is not given to the different file system naming conventions and the Test Set file entry field width.

- A full DOS file name is 12 characters
  (8-character file name + . + 3 character extension).
  A full DOS file name will not fit in the Test Set's file entry field.
- On a DOS formatted disk, any file with the *.PGM* extension is considered a TESTS Subsystem code file. If the TESTS Subsystem attempts to retrieve a file which is not a code file, the following error will be generated: **`Error reading code file. Check file and media.`**
- On a DOS formatted disk, any file with the *.PRC* extension is considered a TESTS Subsystem procedure file. If the TESTS Subsystem attempts to retrieve a file which is not a procedure file, the following error will be generated: **`Error reading procedure file. Check file and media.`**
- On a DOS formatted disk, any file with the *.LIB* extension is considered a TESTS Subsystem library file. If the TESTS Subsystem attempts to retrieve a file which is not a library file, the following error will be generated: **`Error reading library file. Check file and media.`**
- When copying LIF named files to a DOS formatted media, the file name is silently truncated to 8 characters since DOS only allows 8-character file names. This could result in **`ERROR 54 Duplicate File Name`**.
- When storing or deleting files to a DOS formatted media, the file name is silently truncated to 8 characters since DOS only allows 8-character file names. This could result in **`ERROR 54 Duplicate File Name`**.

File Naming Recommendations

If switching between media types (DOS and LIF) or operating exclusively in DOS the following naming conventions are recommended.

- Ensure that only TESTS Subsystem procedure files use the .PRC file extension.
- Ensure that only TESTS Subsystem library files use the .LIB file extension.
- Ensure that only TESTS Subsystem code files use the .PGM file extension.
- Ensure that only user-written NMT test files use the .NMT file extension.
- Ensure that only Save/Recall register files use the .SAV file extension.

ManualsPlus.com

Initializing Media for DOS or LIF File System

The INITIALIZE command is used to initialize a media (external hard disk, external 3.5-inch floppy disk, Epson SRAM Card, PCMCIA SRAM Card and RAM Disk) for use with the DOS or LIF file system. The DOS or LIF file system is specified with the parameter. LIF is the default.

For example, to initialize a PCMCIA SRAM card for the DOS file system on the Test Set, perform the following steps:

1. Put the PCMCIA SRAM card into the Test Set's front-panel Memory Card slot.
2. Display the TESTS (IBASIC Controller) screen.
3. Using the rotary knob or an external terminal, execute the following command from the IBASIC Controller command line:

   INITIALIZE "DOS:INTERNAL,4"

Refer to the *HP Instrument BASIC User's Handbook* for further information regarding the INITIALIZE command.

Test Set File Types

The Test Set file system supports the following file types:

- ASCII - files containing ASCII characters
- BDAT - files containing binary data
- DIR - DOS subdirectory
- DOS - SAVEd code file
- IBPRG - STOREd code file

Storing Code Files

Two IBASIC commands are available for storing program code to a mass storage location: SAVE and STORE. The type of file created by the Test Set's file system when the program code is stored, is dependent upon the format of the media being used. The type of file created verses the media format is outlined in **Table 40**.

ManualsPlus.com

Table 40 **Stored Program Code File Types**

	DOS Formatted Media	LIF Formatted Media
SAVE	DOS	ASCII
STORE	IBPRG	IBPRG

Files that have been stored using the SAVE command must be retrieved using the GET command:

```
SAVE "FM_TEST:,704,1"
GET "FM_TEST:,704,1"
```

Files that have been stored using the STORE command must be retrieved using the LOAD command:

```
STORE "FM_TEST:,704,1"
LOAD "FM_TESTS:,704,1"
```

TESTS Subsystem DOS File Restrictions

The Test Set uses IBASIC 2.0. The IBASIC 2.0 file system can distinguish between DOS files that have been “saved” and those that were “stored.” Consequently this potential problem does not exist in the Test Set.

ManualsPlus.com

Using the ROM Disk

The Test Set comes with several Test Procedures stored on the internal ROM disk. These Test procedures provide instrument diagnostic utilities, periodic calibration utilities, memory management utilities, a variety of general purpose utilities, and several IBASIC demonstration programs.

To see a brief description of what each procedure does perform the following steps:

1. Display the TESTS (Main Menu) screen by selecting the front-panel TESTS key.
2. Using the rotary knob, select the **`Select Procedure Location:`** field and choose ROM from the choices.
3. Using the rotary knob, select the **`Select Procedure Filename`** field. A list of Test Procedures stored on the ROM disk is displayed in the **`Choices:`** field. Using the rotary knob, select the Test Procedure of interest.
4. A brief description of the Test Procedure will be displayed in the **`Description`** field.

ROM DISK cannot be written to for user storage.

The ROM Disk's mass storage volume specifier is ":MEMORY,0,4"

For example: to catalogue the contents of the ROM Disk from the TESTS (IBASIC Controller) screen enter:

```
30 OUTPUT 814;"AFAN:DEMP:GAIN 20 dB"
```

ManualsPlus.com

Using Memory Cards

OTP (One Time Programmable) cards provide removable read-only storage. File editing and erasure are not possible. These cards cannot be programmed by the Test Set; they require a special memory card programmer to save files.

SRAM cards provide removable read/write memory for your files, similar to a flexible disk. Data can be stored, re-stored, read, or erased as needed.

SRAM memory cards require a battery to maintain stored information.

Inserting and Removing Memory Cards

Table 41 Memory Card Part Numbers

Memory	Type	Agilent Part Number
64 kilobytes	SRAM	83230A
1 Mbyte	SRAM	83231A

Figure 20 illustrates how to insert a memory card into the Test Set's front panel. To remove a memory card, simply pull it out.

The Test Set's memory-card label is marked with an arrow that must be inserted on the left side (when you are facing the Test Set) of the front-panel slot.

ManualsPlus.com

NOTE: Memory cards may be inserted and removed with the Test Set powered on or off.

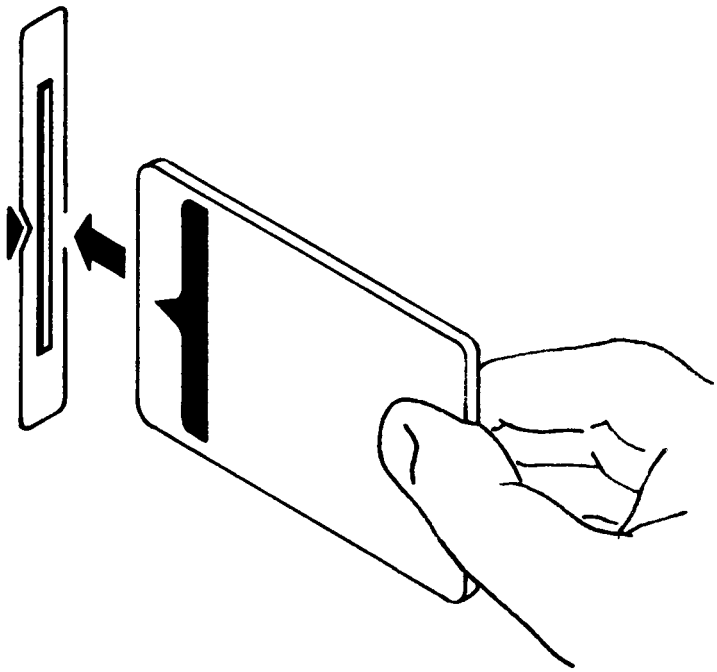

Figure 20 Inserting a Memory Card

ManualsPlus.com

Setting the Write-Protect Switch

The SRAM memory card's write-protect switch lets the user secure its contents from being overwritten or erased. The switch has two positions (see **Figure 21**):

- *Read-write* – The memory-card contents can be changed or erased, and new files may written on the card.
- *Read-only* – The memory-card contents can be read by the Test Set, but cannot be changed or erased.

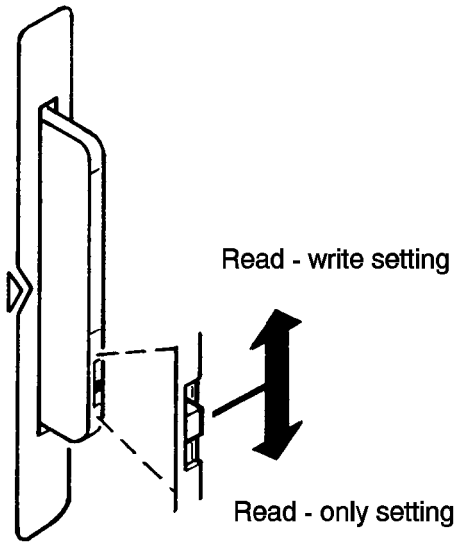

Figure 21 **Setting the SRAM Write-Protect Switch**

ManualsPlus.com

The Memory Card Battery

SRAM memory cards use a lithium battery to power the card. Listed below are the batteries for the Test Set's SRAM cards. SRAM cards typically retain data for over 1 year at 25° C. To retain data, the battery should be replaced annually.

SRAM Card Battery Part Numbers - CR2025 or Agilent 1420-0509

Replacing the Battery

1. Turn the Test Set on and insert the memory card. An inserted memory card takes power from the Test Set, preventing the card's contents from being lost.
2. Hold the memory card in the slot with one hand and pull the battery holder out with your other hand. (See **Figure 22**.)

NOTE: TheTest Set's SRAM cards have a Battery Holder Lock switch immediately above the Write-Protect switch. If the switch is in the locked position the battery cannot be removed. Ensure that the Battery Holder Lock switch is in the unlocked position before trying to remove the battery.

3. Install the battery with the side marked "+" on the same side marked "+" on the battery holder. Avoid touching the flat sides of the battery, finger oils may contaminate battery contacts in the memory-card.
4. Re-insert the battery holder into the memory card.

NOTE: The Test Set's SRAM cards have a Battery Holder Lock switch immediately above the Write-Protect switch. Ensure that the Battery Holder Lock switch is in the locked position after installing the new battery.

5. Remove the memory card from the Test Set.

ManualsPlus.com

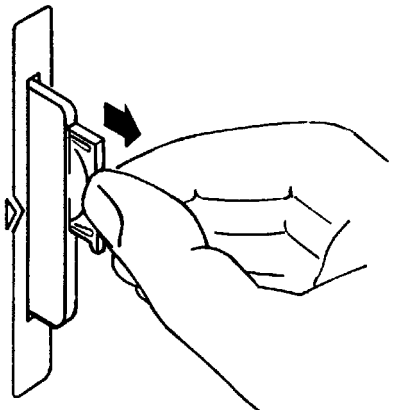

Figure 22 Replacing the Memory Card's Battery

WARNING: Do not mutilate, puncture, or dispose of batteries in fire. The batteries can burst or explode, releasing hazardous chemicals. Discard unused batteries according to the manufacturer's instructions.

ManualsPlus.com

Memory Card Mass Storage Volume Specifier

The front-panel memory card slot's mass storage volume specifier is ":INTERNAL,4" and is the default mass storage device for the Test Set. For example, to catalogue the contents of a memory card from the TESTS (IBASIC Controller) screen, execute the following IBASIC command:

```
C376AT ":INTERNAL,4"
```

or, if the mass storage location has not been changed,

```
CAT
```

If the MSI (Mass Storage Is) command has been used to change the mass storage location to a different device, the ":INTERNAL,4" designation must be used to access the memory card slot. Any changes to the mass storage location made with the MSI (Mass Storage Is) command are lost when the Test Set is turned off.

Memory Card Initialization

All new SRAM cards must be initialized before they can be used to store information. The RAM_MNG procedure stored on the internal ROM Disk can be used to quickly initialize any SRAM memory card.

SRAM Memory Cards can also be initialized from the TESTS (IBASIC Controller) screen by inserting the memory card into the front-panel slot and executing the following IBASIC command:

```
INITIALIZE "<volume type>:INTERNAL,4"
```

where the <volume type> can be LIF or DOS. To verify that the memory card has been properly initialized, execute the IBASIC command:

```
CAT ":INTERNAL,4"
```

If the error message **`ERROR 85 Medium uninitialized`** appears on the screen the memory card has not been properly initialized. Check the SRAM battery to ensure that it's charged and inserted correctly in the battery holder.

ManualsPlus.com

Backing Up Procedure and Library Files

Making a backup copy of procedure and library files helps guard against file loss due to memory card (or battery) failure.

Using the COPY_PL ROM Program

The COPY_PL procedure on the internal ROM Disk will make backup copies of TESTS Subsystem's Procedure and Library files onto a second SRAM memory card, and can also initialize an uninitialized SRAM memory card. This program does not make backup copies of TESTS Subsystem's code files, or copy any type of file to OTP memory cards.

The COPY_PL procedure is designed for use with Agilent 11807 software to make backup copies of Agilent Technologies supplied TESTS Subsystem's Procedure and Library files or user-generated TESTS Subsystem's Procedure and Library files.

To Run COPY_PL:

1. Access the TESTS (Main Menu) screen.
2. Select the **`Select Procedure Location:`** field and choose **`ROM`**.
3. Select the **`Select Procedure Filename:`** field and select **`IB_UTIL`**.
4. Select the **`Run Test`** softkey to start the procedure.
5. Follow the displayed instructions.

ManualsPlus.com

Copying Files Using IBASIC Commands

Files can be copied from one mass storage device to another using the IBASIC COPY command. For example, to copy a file from a memory card to the left drive of an external dual-disk drive with a mass storage volume specifier of ":,702,0", execute the following IBASIC command from the TESTS (IBASIC Controller) command line:

```
COPY "FM_TEST:INTERNAL,4" TO "FM_TEST:,704,0"
```

“Stored” or “saved” files on one memory card can be copied to another memory card as follows:

- Insert the memory card containing the file to be copied.
- LOAD or GET[1] the desired file from the memory card into the Test Set .
- Remove the original memory card.
- Insert the destination memory card in the Test Set.
- STORE or SAVE[1] the file to the destination memory card.

Copying an Entire Volume

An entire volume can be copied from one mass storage device to the same type of mass storage device using the volume copy form of the COPY command. The destination volume must be as large as, or larger than, the source volume. The directory and any files on the destination volume are destroyed. The directory size on the destination volume becomes the same size as the source media. Disc-to-disc copy time is dependent on the mass storage device type. The volume copy form of the COPY command was designed to copy like-media to like-media and like-file-systems to like-file-systems. For example, to copy the entire contents of one internal RAM disk to another internal RAM disk, execute the following IBASIC command from the TESTS (IBASIC Controller) command line:

```
COPY ":MEMORY,0,0" TO ":MEMORY,0,1"
```

1. See **“Storing Code Files” on page 374** for information about the LOAD, GET, STORE, and SAVE commands.

ManualsPlus.com

NOTE: Using the volume copy form of the COPY command can produce unexpected results. For example, using the volume copy form to copy the contents of a 64 Kbyte SRAM card to an external GPIB 630-KByte floppy disk will result in the external floppy disk having a capacity of only 64 Kbyte when the volume copy is finished. Furthermore all files on the floppy disk before the volume copy was executed will be lost and *are not recoverable*. Additionally, the file system type on the source media (LIF or DOS) is forced onto the destination media. Caution should be exercised when using the volume copy form of the COPY command.

The Test Set only supports the following types of volume copy using the volume copy form of the COPY command:

1. Like- media to like-media (RAM disk to RAM disk, external floppy to external floppy, and so forth)
2. Like-file-system to like-file-system (DOS to DOS, LIF to LIF)

All other types of volume copy are unsupported and will produce unexpected results or system errors.

Using wildcards in the COPY command can eliminate the need to use the volume form of the COPY command. Refer to the *Instrument BASIC User's Handbook* for further information on wildcards and their use in the COPY command.

ManualsPlus.com

Using RAM Disk

RAM Disk is a section of the Test Set's internal RAM memory that has been set aside for use as a mass storage device. RAM Disk acts much the same as an external disk drive; that is, program and data files can be stored, re-stored, erased, and retrieved from the RAM Disk.

The RAM Disk is partitioned into four separate units: 0-3. Each unit is treated as a separate "disk." The size of each disk can be specified in 256-byte increments.

The four RAM Disk units are designated ":MEMORY,0,0" to ":MEMORY,0,3". For example, to catalog the contents of RAM Disk unit "0" from the TESTS (IBASIC Controller) screen, execute the following command:

```
CAT ":MEMORY,0,0"
```

Volume 0's contents can be viewed and loaded from the TESTS (IBASIC Controller) screen, the TESTS (Main Menu) screen, the TESTS (Save/Delete Procedure) screen and the Signaling Decoder screen in NMT mode. Volumes 1, 2, and 3 can only be accessed from the TESTS (IBASIC Controller) screen.

NOTE: **RAM Disk Erasure.** The contents of RAM Disk are easily lost. Unit 0 can be overwritten by the RAM_MNG utility program (ROM Disk). Unit 1 can be overwritten by the COPY_PL utility program (ROM Disk). The contents of all units are lost when the SERVICE screen's **`RAM Initialize`** function is executed. Therefore, RAM Disk should only be used for non-permanent, short-term storage of program or data files.

ManualsPlus.com

Initializing RAM Disks

Each RAM Disk unit must be initialized before it can be used. Unit 0 can be initialized using the RAM_MNG procedure stored on internal ROM Disk. Volumes 1, 2, and 3 must be initialized from the TESTS (IBASIC Controller) screen.

The optional “unit size” parameter in the following procedure specifies the memory area, in 256 byte blocks, set aside for each disk unit.

Follow these steps to initialize volumes 1, 2, or 3:

1. Access the TESTS (IBASIC Controller) screen.
2. Using the rotary knob or an external terminal, enter and execute the IBASIC command:

   INITIALIZE ":MEMORY,0,<unit number 1-3>",<unit size>

   For example:

   INITALIZE ":MEMORY,0,1",50

NOTE: The IBASIC INITIALIZE command defaults to LIF format. Any media (RAM Disk, SRAM Cards, External Hard Disk Drive, or 3.5-inch floppy) formatted using the default conditions of the INITIALIZE command will be the LIF format and will be unusable in the Test Set , except for IBASIC mass storage operations. Refer to **“Initializing Media for DOS or LIF File System” on page 374** for information on formatting media for the DOS file system.

ManualsPlus.com

Using External Disk Drives

The Test Set supports only GPIB external disk drives. Certain configuration information is required by the Test Set to access external disk drives.

The I/O CONFIGURE screen's GPIB **Mode** field must be set to Control any time an external disk drive is used by the Test Set.

To load files from the TESTS screens or NMT Signaling Decoder screen, the disk's mass storage volume specifier must be entered in the **External Disk Specification** field on the TESTS (External Devices) screen (for example, **:,702,1**).

Initializing External Disks

All new external disk media must be initialized before it can be used to store information. External disk media can be initialized for either LIF (Logical Interchange Format) or DOS (Disk Operating System) format using the Test Set. (See **"DOS and LIF File System Considerations" on page 371**.)

External disk media can be initialized from the TESTS (IBASIC Controller) screen by inserting the new media into the external disk drive and executing the following IBASIC command:

```
INITIALIZE "<volume type>:<external disk mass storage volume
                specifier>"
```

where the <volume type> can be LIF or DOS

For example:

```
INITIALIZE "DOS:,702,1").
```

To verify that disk media has been properly initialized, execute the IBASIC command:

```
CAT "<external disk mass storage volume specifier>"
```

For example:

```
CAT ":,702,1"
```

ManualsPlus.com

7

IBASIC Controller

ManualsPlus.com

Introduction

The Test Set contains an instrument controller that can run programs to control the various instruments in the Test Set and instruments/devices connected to the Test Set's external I/O ports (GPIB, serial and parallel). Refer to **"Overview of the Test Set" on page 22** for a complete description of the Test Set's hardware architecture.

The instrument controller runs a subset of the Rocky Mountain BASIC programming language called Instrument BASIC or IBASIC. Using this programming language it is possible to develop programs which use the Test Set's instruments to automatically test a variety of radios. Software is available from Agilent Technologies, the Agilent 11807 series, for testing the major radio systems currently in use today. Users can also develop their own IBASIC programs for automated radio testing.

This chapter is designed to provide the programmer with the information needed to develop IBASIC programs for use on the built-in IBASIC controller. Refer to the individual Agilent 11807 software manuals for information on using the IBASIC controller with Agilent Technologies supplied software.

ManualsPlus.com

The IBASIC Controller Screen

The Test Set has a dedicated screen for interfacing with the built-in IBASIC controller. This is the TESTS (IBASIC Controller) screen as shown in **Figure 23**. This screen is accessed as follows:

- Select the front panel TESTS key. The TESTS (Main Menu) screen will be displayed.
- Using the rotary knob, position the cursor on the **IBASIC** field in the lower center of the screen.
- Push the rotary knob and the TESTS (IBASIC Controller) screen will be displayed.

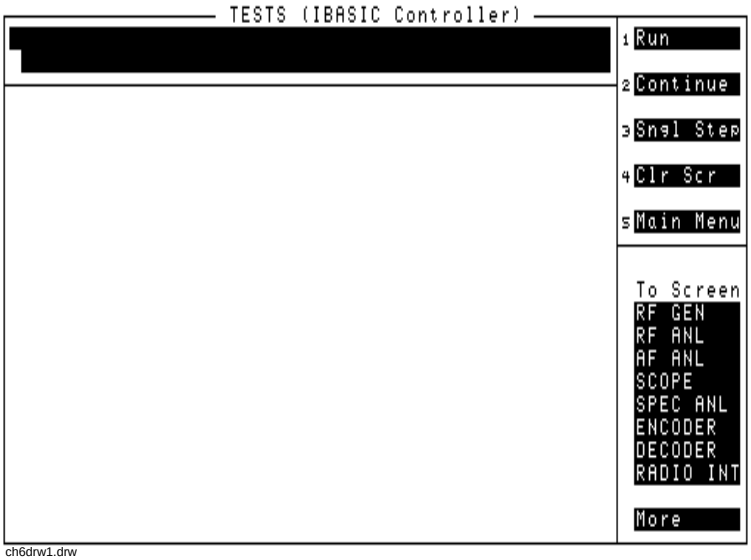

Figure 23 **The IBASIC Controller Screen**

ManualsPlus.com

The TESTS (IBASIC Controller) screen can be accessed programmatically by sending the following command:

OUTPUT 714;"DISP TIBasic"

The TESTS (IBASIC Controller) screen is divided into several areas which are used by the IBASIC controller for different purposes.

The small horizontal rectangle at the top left is the IBASIC command line. As the name implies IBASIC commands can be executed from this line. Commands can be entered locally using the rotary knob or remotely using serial port 9. A maximum of 100 characters may be entered into the command line.

The vertical rectangle at the top right side is the softkey label area. The five highlighted areas within the softkey label area correspond to the five special function keys on the front panel of the Test Set. IBASIC programs can assign tables to these keys and control program execution by using ON KEY interrupts.

The vertical rectangle at the bottom right side is the **`To Screen`** area and is the same as the **`To Screen`** area displayed on any other Test Set screen. The user may switch to some other Test Set screen by using the rotary knob to position the cursor onto the desired screen and then pushing the knob.

The large rectangle in the center of the screen is the CRT (display screen) for the IBASIC controller. The IBASIC controller uses this area for, displaying alpha, numeric, and graphic information, program editing, program listing and so forth. This area operates as would the CRT on an external HP® 9000 Series 200/300 Workstation.

ManualsPlus.com

Important Notes for Program Development

The Test Set is designed to operate the same way under automatic control as it does under manual control. This has several implications when designing and writing programs for the Test Set:

- To automate a particular task, determine how to do the task manually and then duplicate the steps in the program.
- In Manual Control mode, a Test Set function must be displayed and "active" to make a measurement or receive DUT data. Therefore, to make a measurement using an IBASIC program, follow these basic steps:
  1. Use the DISPlay command to select the screen for the instrument whose front panel contains the desired measurement result or data field (such as AF ANALYZER).
  2. Set the measurement field (such as SINAD) to the ON state.
  3. Trigger a reading.
  4. Read the result.

NOTE: The following sections discuss developing IBASIC programs which do not use the TESTS Subsystem. Programs written for the TESTS Subsystem require the creation of supporting Library, Procedure, and Code files, and must be written using a specific program structure. The Agilent 11807A Radio Test Software packages are examples of this type of program.

Refer to the **"Writing Programs For the TESTS Subsystem" on page 456** for information on writing programs for the TESTS Subsystem.

ManualsPlus.com

Program Development

There are three recommended approaches for developing IBASIC programs. They are outlined in **Figure 24** and discussed in more detail later in this chapter. Since the Test Set only has the rotary knob and numeric keypad for data/character entry, developing programs on the Test Set alone is not recommended. All three development methods employ an external computer or terminal. The choice of development method will typically be driven by available equipment and extent of development task. If the development task is large, it is strongly recommended that a BASIC language computer be used as outlined in development Method #1.

Method #2 is recommended for large program modification or smaller program development. Method #2 uses an external PC or terminal as the CRT and keyboard for the built-in IBASIC controller.

Method #3 is least preferred for program development or modification because no syntax checking occurs until the program is first run making it difficult to debug long programs. Details of each development method are given later in this chapter.

ManualsPlus.com

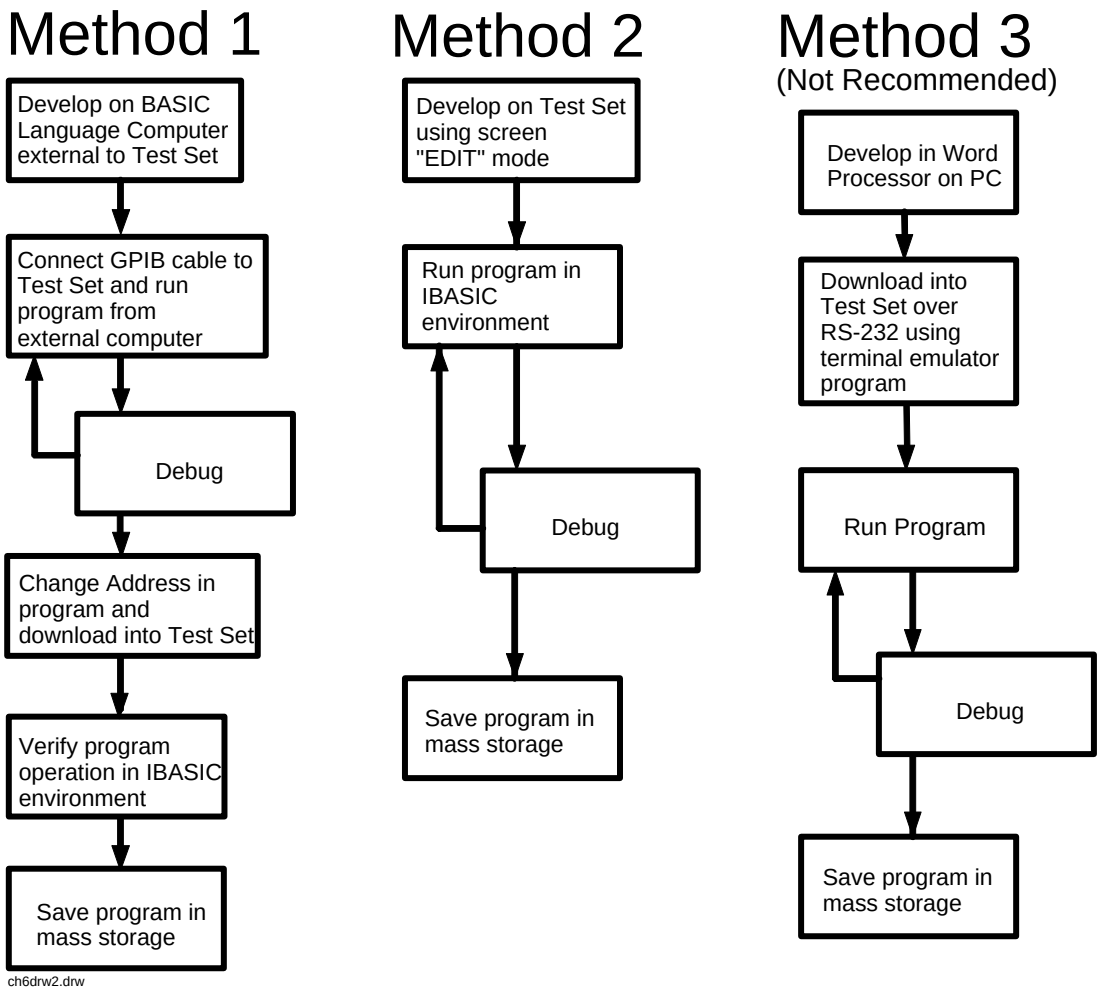

Figure 24 **Program Development Methods**

ManualsPlus.com

Interfacing to the IBASIC Controller using Serial Ports

This section describes how to interconnect the Test Set to an external PC or terminal using the Test Set's serial I/O ports. Program development methods #2 and #3 use PC's or terminals connected to the Test Set through the Test Set's serial I/O ports. To determine which programming environment best fits your application, refer to **"Choosing Your Development Method" on page 409**.

Test Set Serial Port Configuration

To prepare for IBASIC program development, the Test Set must first be configured to operate with a PC or terminal.

This includes,

- Hardware
- Cables
- Screens - I/O CONFIGURE and TESTS (IBASIC Controller)

There are two independently controllable serial interfaces in the Test Set, each using a 3-wire transmit / receive / ground implementation of the RS232 standard. The IBASIC Controller can send and receive data from either port by using its assigned select code.

Serial Port Information

The Test Set's rear-panel RJ-11 connector has 6 conductors. (Note that this jack appears the same as a common 4-conductor RJ-11 telephone jack, but the Test Set jack uses 6 conductors). Three of the wires are designated as Serial I/O Port address 9, and the other three wires are designated Serial I/O Port address 10 (also referred to as Serial Port B). These select codes cannot be changed.

ManualsPlus.com

Serial Port 9. Serial Port 9 is used for developing and editing IBASIC programs since it can be connected directly to the **`IBASIC Command Line`** field. It can also be used for data I/O from an IBASIC program. Settings can be changed from the I/O CONFIGURE screen, using IBASIC commands executed from the **`IBASIC Command Line`** field, or using IBASIC commands executed from an IBASIC program.

Serial Port 10. Serial Port 10 is primarily used for data I/O from an IBASIC program to a device-under-test- (DUT). Settings can be changed using IBASIC commands executed from the **`IBASIC Command Line`** field, or using IBASIC commands executed from an IBASIC program but not from the I/O CONFIGURE screen.

Reason for Two Serial Ports

A typical application uses serial port 10 to send and receive data to and from a DUT and uses serial port 9 to print or log test results to a serial printer or PC.

In the program development environment, serial port 9 can be used to communicate with the external PC or terminal, and serial port 10 can be connected to a serial printer for generating program listings or as the destination printer for the program itself. This is schematically shown in **Figure 26 on page 400**. If simultaneous multiple serial I/O is not a requirement then only use serial port 9 as it can directly access the **`IBASIC Command Line`** field.

For your convenience, **Figure 25 on page 399** and **Table 42** on this page, show the cables and adapters that are available from Agilent Technologies for connecting external devices to the Test Set's serial I/O ports. See **Figure 26 on page 400** for a wiring diagram to construct your own cables. RJ-11 cables and adapters can be wired several ways. If you buy a cable or adapter other than the Agilent parts listed in **Table 42**, verify the connections for the pins indicated, before connecting the cables to the Test Set.

ManualsPlus.com

Table 42 Available Agilent RS232 Serial Cables and Adapters

Device (for RS232 Serial connections)	Typical Uses	Description	Agilent Part Number
Single to Dual RJ-11 Adapter Cable	To connect to Serial Ports 9 and 10 simultaneously	Single 6-pin RJ-11 (male) to Dual 6-pin RJ-11 (female); 0.6-meter cable	08921-61031
Cable with Connectors	Test Set to PC	6-pin RJ-11 (male) to 9-pin DB-9 (female); 2-meter cable	08921-61038
Cable with Connectors	Test Set to printer or terminal	6-pin RJ-11 (male) to 25-pin DB-25 (male); 3-meter cable	08921-61039
RJ-11 to DB-25 Adapter	Use with long cable 98642-66508.	6-pin RJ-11 (female) to 25-pin DB-25 (male) Adapter	98642-66508
Cable with Connectors	Long Cable from Test Set to PC or printer (use with 98642-66508)	6-pin RJ-11 (male) to 6-pin RJ-11 (male); 15-meter cable	98642-66505

ManualsPlus.com

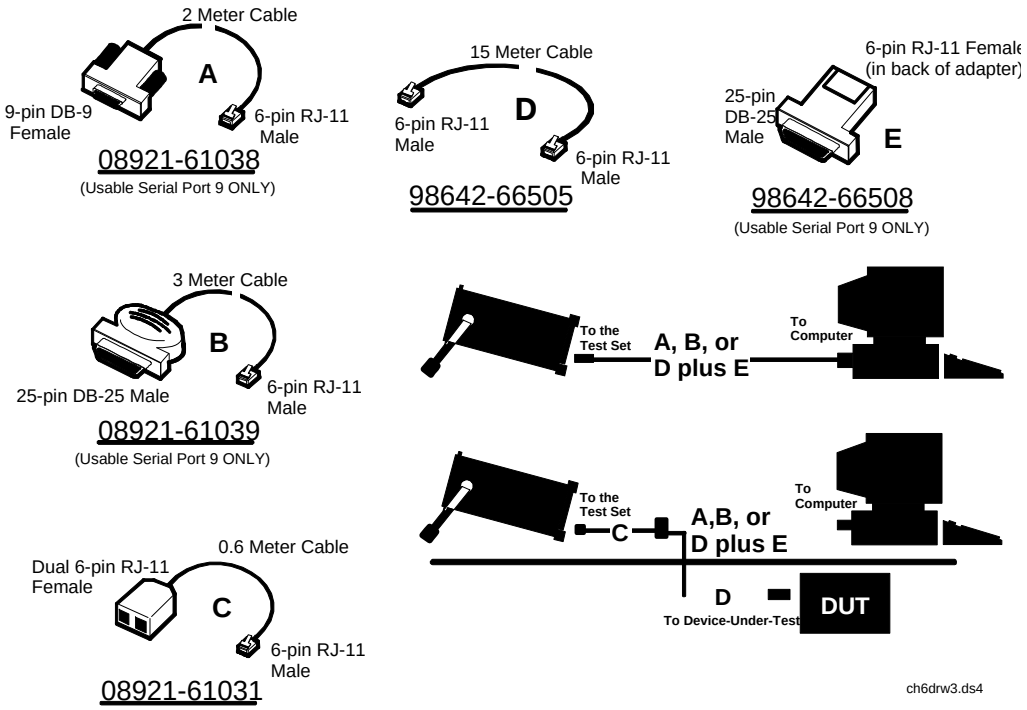

Figure 25 **Available Agilent RS-232 Serial Cables and Adapters**

ManualsPlus.com

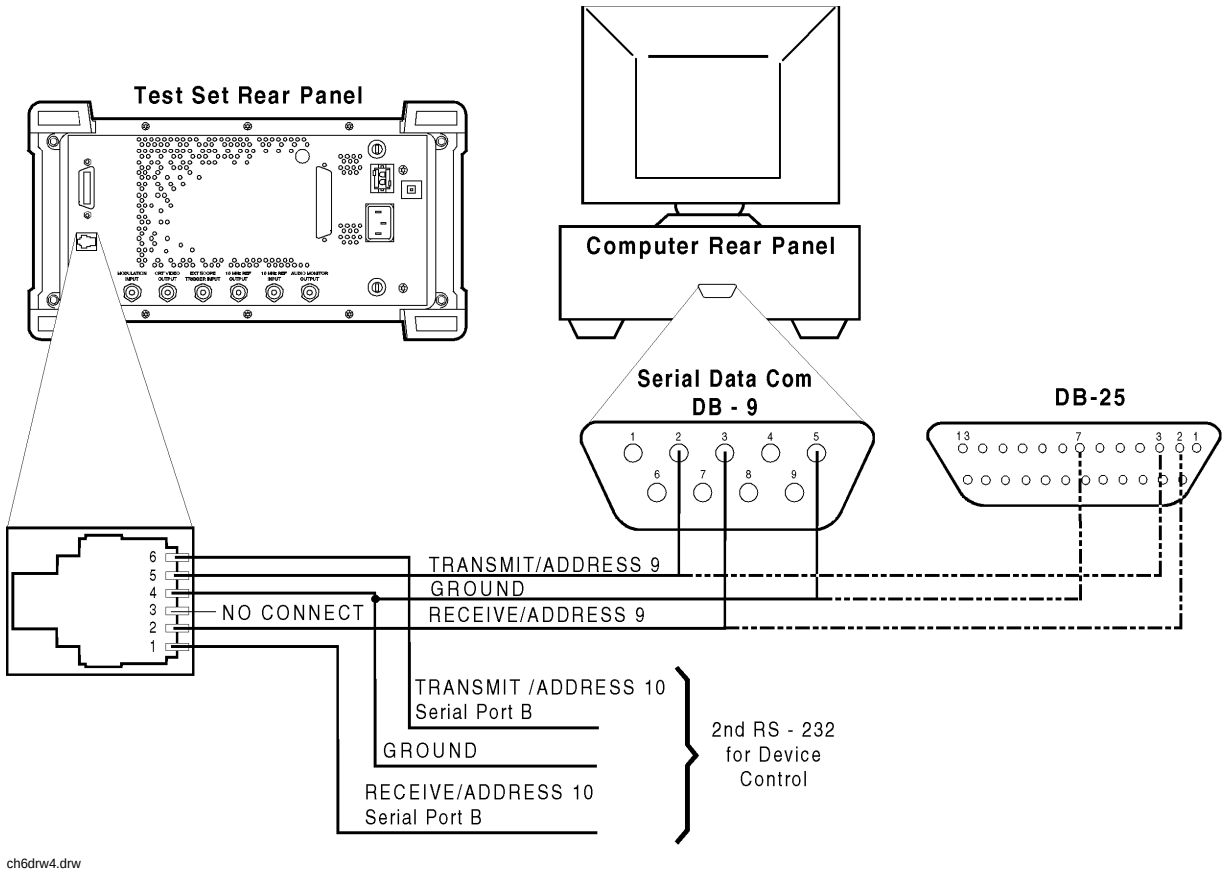

Figure 26 **Connecting the Test Set Serial Port to a PC or Terminal**

Table 43 **Port 9 or Port 10 serial cable connections**

RJ-11 pins	Signal	DB-9 pins
6	Transmit/Address 10	2
5	Transmit/Address 9	2
4	Ground	5
3	not used	
2	Receive/Address 9	3
1	Receive/Address 10	3

ManualsPlus.com

Serial Port 9 Configuration

Table 44 on page 402 and the following paragraphs describe how to configure Serial Port 9 for communications with an external PC or terminal. Implications of the various choices are discussed.

1. Under the **`To Screen`** menu, select **`More`**, then select IO CONFIG.
2. The I/O CONFIGURE screen will be displayed.
3. Set the **`Serial Baud Rate`**, **`Parity`**, **`Data Length`**, **`Stop Length`**, **`Rcv Pace`** and **`Xmt Pace`** fields to match your PC or terminal settings. The recommended settings are shown in Table 44 on page 402. These settings will be retained by the Test Set. They will not change if the PRESET key is pressed, if the Test Set receives a *RST Common Command, or the power is turned on and off.
4. Set the **`Serial In`** field to **`Inst`**. This routes Serial Port 9 to the **`IBASIC Command Line`** field. Characters typed on the external PC or terminal will now appear in the **`IBASIC Command Line`**.
5. Set the **`IBASIC Echo`** field to **`ON`**. This will cause IBASIC character output from commands (such as LIST, PRINT or DISPLAY) or error messages to echo characters to Serial Port 9 (the characters will in turn show up on the external PC or terminal screen). This will allow program listings and syntax error messages to be seen on the external PC or terminal.
6. Another method which can be used to output characters to the external PC or terminal is to execute the IBASIC command, PRINTER IS 9. This causes IBASIC to direct all print output to Select Code 9. Select Code 9 is the Test Set's Serial Port 9. Select Code 1 is the Test Set's CRT. Select Code 1 is also the default address for the PRINTER IS command, so all program printer output defaults to the Test Set's CRT (unless changed with the PRINTER IS command).
7. Set the **`Inst Echo`** field to **`ON`**. This will cause characters to be echoed back to the external PC or terminal as they are received at Serial Port 9. If the echo feature of the external PC or terminal is also enabled all the characters sent to the Test Set will be displayed twice on the external PC or terminal. Enable echo on only one device, either the Test Set or the external PC or terminal.

ManualsPlus.com

Receive and Transmit Pacing

When receiving characters into the **`IBASIC Command Line`** field, the Test Set's microprocessor responds to each entry and no buffering is required. Therefore, when using your PC or terminal to send characters to the **`IBASIC Command Line`** field, it is permissible to set **`Rcv Pace`** and **`Xmt Pace`** to **`None`**.

When sending data through the Test Set's Serial Port to external devices like printers which may have small input buffers, it is important to set **`Rcv Pace`** and **`Xmt Pace`** to **`Xon/Xoff`**. This allows the printer to stop data transmission from the Test Set when the printer's buffer is full and then start it again when the printer is ready.

The Test Set has a Serial Port input buffer length of 2000 characters with firmware revision B.01.00 and greater. Buffer size becomes important when IBASIC programs expect to receive large amounts of data through the Serial Port with a single ENTER statement.

Table 44 Test Set Serial Port 9 Configuration

Field	Available Settings	Recommended Setting
Serial In	Inst/IBASIC	Inst
IBASIC Echo	On/Off	On
Inst Echo	On/Off	On
Serial Baud Rate	150, 300, 600, 1200, 2400, 4800, 9600, 19200	9,600
Parity	None, Odd, Even, Always 1, Always 0	None
Data Length	7 bits, 8 bits	8 bits
Stop Length	1 bit, 2 bits	1 bit
Rcv Pace (receive pacing)	None, Xon/Xoff	Xon/Xoff
Xmt Pace (transmit pacing)	None, Xon/Xoff	Xon/Xoff

ManualsPlus.com

PC Configuration

To prepare for IBASIC program development, the external PC or terminal must be configured to operate with the Test Set. This configuration includes

- Hardware
- Terminal Emulator Software

PC Serial Port Configuration

Refer to **Figure 26 on page 400** for connection details. Connect the Test Set's Serial Port 9 to a serial I/O (input/output) port on the PC. On many PCs, a serial port is available as either a 25-pin DB-25 (female) connector or a 9-pin DB-9 (male) connector. This port can be configured as COM1, COM2, COM3, or COM4 (communications port 1, 2, 3, or 4) depending on the installed PC hardware and user-defined setup. Refer to the instructions shipped with the PC for hardware and software configuration information.

Terminal Emulator Configuration Information

A "terminal emulator" is an application program running on the PC that communicates with one of the serial communication ports installed in the PC. It provides a bi-directional means of sending and receiving ASCII characters to the Test Set's serial port.

In general, a "terminal emulator" enables the PC to act like a dedicated computer terminal. This type of terminal was used before PCs to allow remote users to communicate through RS232 with central mainframe computers. An ANSI-compatible terminal like the Digital Equipment Corporation VT-100 can be used to directly communicate with the Test Set. PC terminal emulation application programs have been designed to have setup fields much like these older technology terminals.

ManualsPlus.com

Setting Up Microsoft Windows Terminal on your PC (Windows Version 3.1)

1. Start the Terminal program in Windows.
2. From the Terminal Menu select Settings then Emulation.
3. Select DEC VT-100 (ANSI)
4. From the Terminal Menu select Settings then Terminal Preferences
5. Edit the Terminal Preference settings to match the following
   - Terminal Modes
     Line Wrap: Off
     Local Echo: Off
     Sound: Off
   - Columns: **`132`**
   - CR->CR/LF
     Inbound: **`Off`**
     Outbound: **`Off`**
   - Cursor
     `Block`
     Blink: **`On`**
   - Terminal Font: **`Fixedsys`**
   - Translations: **`None`**
   - Show Scroll Bars: **`On`**
   - Buffer Lines: **`100`**
   - Use Function, Arrow, and Ctrl Keys for Windows: **`Off`**
6. From the Terminal menu select Settings then Text Transfers.
7. Edit the Text Transfer settings to match the following.
   - Flow Control: **`Standard Flow Control`**
   - Word wrap Outgoing Text at Column: **`Off`**
8. From the Terminal menu select Settings then Communications
9. Edit the Communications settings to match those of the Test Set.

ManualsPlus.com

Example Terminal Communications Settings

- Baud Rate: 9600
- Data Bits: 8
- Stop Bits: 1
- Parity: None
- Flow Control: Xon/Xoff
- Connector: Com1 (be sure to match your current setup)
- Parity Check: Off
- Carrier Detect: Off

Setting Up ProComm Revision 2.4.3 on your PC

ProComm is a general purpose telecommunications software package for PC's with MS-DOS. One of its functions is to provide an RS-232 terminal function on a typical PC.

Running ProComm in MSDOS (You can use ProComm's built-in help function to learn more about setting it up).

1. To access the help and command functions, press the Alt and F10 keys simultaneously (abbreviated as Alt+F10).
2. Press the space bar to move among the choices for a particular field.
3. Press ENTER to accept the displayed choice.

Setting up the ProComm Software

1. Press Alt+ P to access the LINE SETTINGS window.
2. Enter the number **`11`**. This will automatically set the following:

   Baud rate: **`9600`**
   Parity: **`None`**
   Data Bits: **`8`**
   Stop Bits: **`1`**
   Selected communications port: **`COM1`** (This may be different on your PC)

3. To select a different communications port, enter the following numbers:

   20: **`COM1`**
   21: **`COM2`**
   22: **`COM3`**
   23: **`COM4`**

4. Enter the number 24 to save changes, to make the new configuration your default, and to exit LINE SETTINGS.

ManualsPlus.com

5. Press Alt+S for the SETUP MENU.
6. Enter the number 1 for MODEM SETUP.
7. Enter the number 1 for the Modem init string.
8. Press Enter to set a null string.
9. Press Esc to exit MODEM SETUP back to the SETUP MENU.
10. Enter the number **2** for TERMINAL SETUP.
11. Terminal emulation: **VT-100**

    Duplex: **FULL**
    Flow Control: **XON/XOFF**
    CR translation (in): **CR**
    CR translation (out): **CR**
    BS translation: **NON-DEST**
    BS key definition: **BS**
    Line wrap: **ON**
    Scroll: **ON**
    Break length (ms): **350**
    Enquiry (CNTL-E): **OFF**

12. Press Esc to exit Terminal Setup back to the Setup Menu.
13. Enter the number **4** for General Setup.

    Translate Table: **OFF**
    Alarm sound: **OFF**
    Alarm time (secs): **1**
    Aborted downloads: **KEEP**

14. Press Esc to exit General Setup back to the Setup Menu.
15. On the Setup Menu, press S to save your entries.
16. Press Esc to exit the Setup Menu.
17. Press Alt+X to exit ProComm back to MS-DOS.

ManualsPlus.com

Setting Up Agilent AdvanceLink (Agilent 68333F Version B.02.00) on your PC

Agilent AdvanceLink is a software program which allows PCs to be used as an alphanumeric or graphics terminal. It can also automate terminal and file-transfer functions. The version described will work with PCs with the MS-DOS or PC-DOS operating systems. (AdvanceLink for Windows is also available, and configuration is very similar).

Running AdvanceLink in MSDOS

1. Press the Tab key to move from one field to the next, which also accepts the displayed choice.
2. Press the NEXT CHOICE and PREVIOUS CHOICE keys to move among the choices for a particular field.

Setting up the AdvanceLink Software

1. Press the TERMINAL function key.
2. Press CONFIG KEYS.
3. Press GLOBAL CONFIG.

   Keyboard: **`USASCII`**
   Personality: **`ANSI`**
   Language: **`ENGLISH`**
   Terminal Mode: **`Alphanumeric`**
   Remote To: enter your PC's selected serial port number, often, **`Serial 1`**
   Printer I/F: **`None`**
   Memory Size: **`32K`**
   Plotter I/F: **`None`**
   Video Type: **`select your display type`**
   Forms Path: **`no entry`**
   Screen Size: **`select your size – 23 or 24`**

4. Press DONE to return to the Config screen.
5. Press REMOTE CONFIG (to set up the Serial port you selected above in Remote To).

   Baud Rate: **`9600`**
   Parity/DataBits: **`None/8`**
   Enq Ack: **`NO`**
   Asterisk: **`OFF`**
   Chk Parity: **`NO`**
   SR(CH): **`LO`**
   Recv Pace: **`Xon/Xoff`**
   CS(CB)Xmit: **`NO`**
   XmitPace: **`Xon/Xoff`**

ManualsPlus.com

6. Press DONE to return to the Config screen.
7. Press TERMINAL CONFIG.

   Terminal Id: **2392A**
   LocalEcho: **OFF**
   CapsLock: **OFF**
   Start Col: **01**
   Bell: **ON**
   XmitFnctn(A): **NO**
   SPOW(B): **NO**
   InhEolWrp(C): **NO**
   Line/Page(D): **LINE**
   InhHndShk(G): **NO**
   Inh DC2(H): **NO**
   Esc Xfer(N): **YES**
   ASCII 8 Bits: **YES**
   Fld Separator: **down arrow or US**
   BlkTerminator: **up arrow or RS**
   ReturnDef: **musical note or CR**
   Copy: **Fields**
   Type Ahead: **NO**
   Row Size: **160**
   Host Prompt Character: **left arrow or D1**
   Horiz. Scrolling Increment: **08**
8. Press **DONE** to return to the Config screen.
9. Press **DONE** to return to the Terminal screen.
10. Press MAIN to return to the Main screen.
11. Press EXIT ADVLINK to exit.

Terminal Configuration

Use the cable information in **Table 42 on page 398** and **Figure 25 on page 399** for connecting to an external terminal. Terminals typically have a DB-25 (male) connector. Set the terminal for DEC VT-100 ANSI emulation. Many ASCII terminals will also function properly.

To set up the terminal, use the field settings found in the Agilent AdvanceLink terminal emulator section found earlier in this chapter. As a minimum, make sure the terminal's basic setup information matches the fields on the Test Set's I/O CONFIGURE screen (refer to **Table 44 on page 402** for recommended settings).

ManualsPlus.com

Choosing Your Development Method

There are three fundamental methods for developing IBASIC programs for the Test Set. See **Figure 27** below.

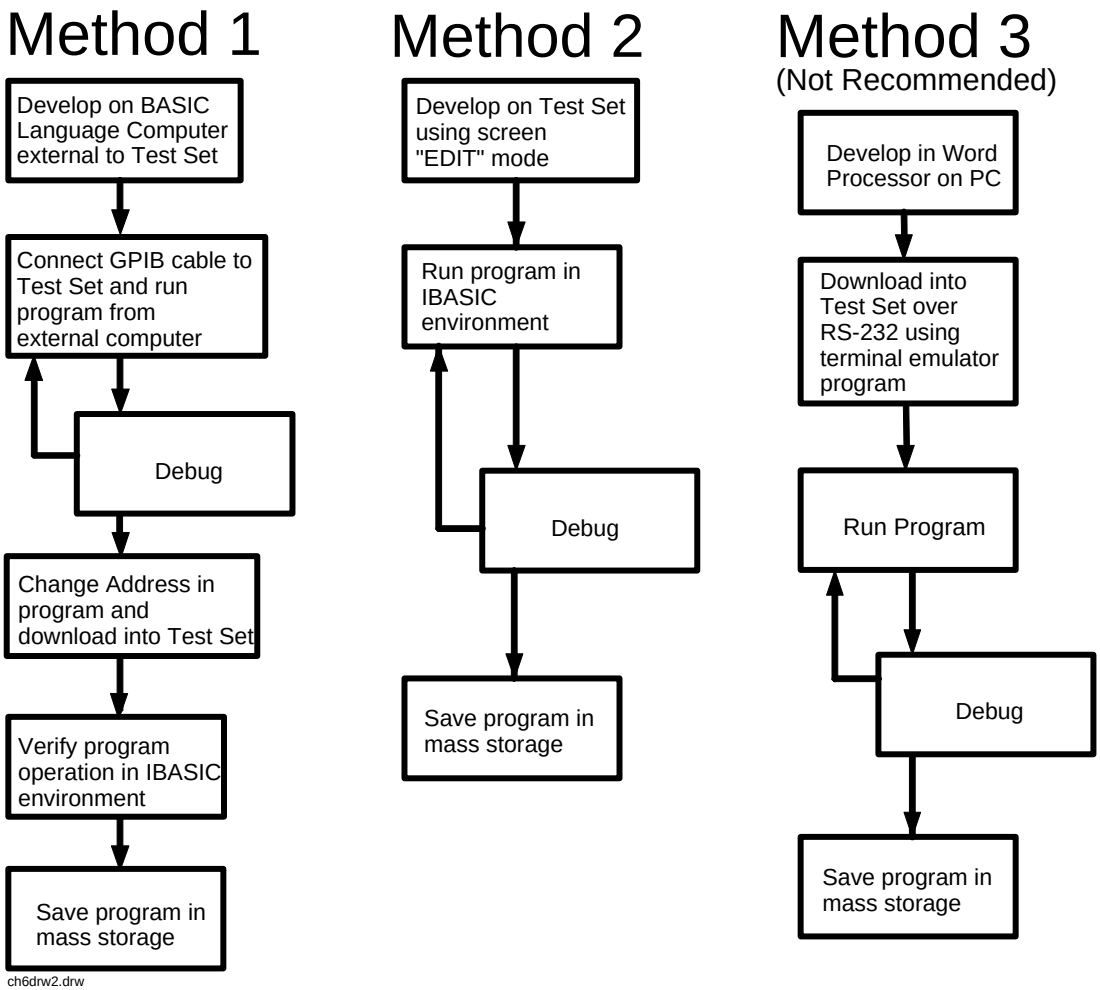

Figure 27 **Three Possible Development Methods**

ManualsPlus.com

Method 1

Using a BASIC language computer (either an Agilent technical computer or a PC running BASIC with GPIB) is the best method for developing any size program. This is because the program can be debugged directly on the external computer before downloading the program into the Test Set. Using this approach the programmer can observe the Test Set's display to see changes in state and easily verify the correct measurements.

Method 2

If a BASIC language computer is not available, program development can be done directly on the Test Set using the IBASIC EDIT mode. A PC connected to the Test Set through RS-232, as described earlier in this chapter, is used as the CRT and keyboard for the internal controller. In this method, the program always resides in the Test Set and can be run at any time. Mass storage is usually an SRAM card. When running IBASIC programs on the Test Set's internal controller, the Test Set displays only the IBASIC screen, not the individual instrument screens as the program executes. This makes troubleshooting larger programs more difficult.

Method 3

The third method of program development is to use a word processor on a PC with RS-232, and then download the program into the Test Set for execution. This is the least favorable choice for development because downloading code into the Test Set over RS-232 requires a loader utility program running in the Test Set and a RAM memory card present as an intermediate storage location before running the program. (For shorter programs, the intermediate storage location is not necessary.) No IBASIC command syntax is checked until the program is run after downloading. Also, when running IBASIC programs on the Test Set's internal controller, the Test Set displays only the IBASIC screen, not the individual instrument screens as the program executes. This makes troubleshooting larger programs more difficult.

ManualsPlus.com

Method #1. Program Development on an External BASIC Language Computer

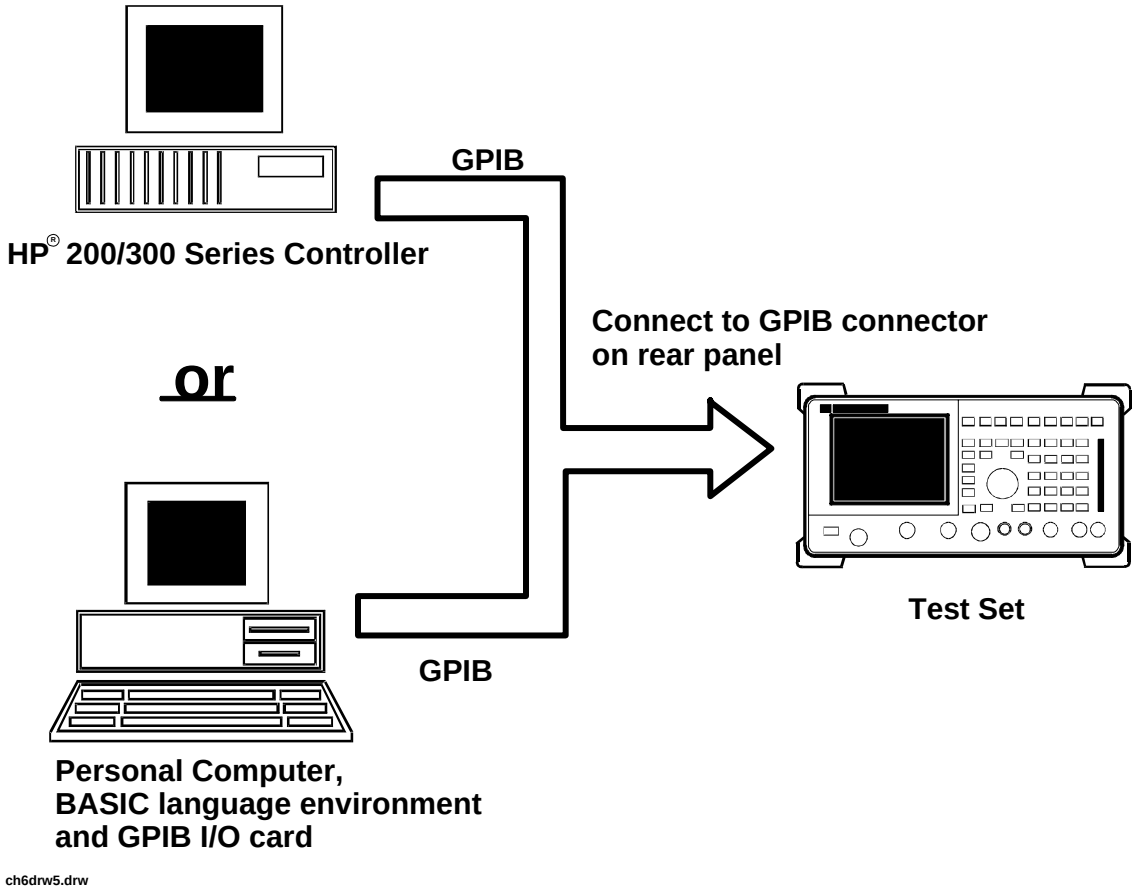

Figure 28 Connecting IBASIC Language Computers to the Test Set

ManualsPlus.com

Configuring the Test Set's GPIB Interface

To use GPIB (the IEEE 488 interface bus) as a means of communicating with the Test Set, connect a standard GPIB cable (such as the Agilent 10833B) between the Test Set's rear-panel GPIB connector and the GPIB connector on the external BASIC language computer.

On the Test Set

1. Select the I/O CONFIGURE screen.
2. Set the **`Mode`** field to **`Talk&Lstn`**.

NOTE: If the **`Mode`** field is set to **`Control`**, there could possibly be a System Controller conflict between the external BASIC language computer and the Test Set, resulting in either an Interface Status Error or "lock up" of the GPIB. Refer to **"Passing Control" on page 349**.

3. Set the **`HP-IB Adrs`** field to the desired address for the Test Set. The default value is 14.

Compatible BASIC Language Computers

As shown in **Figure 28 on page 411**, there are two types of computers that can be used in this development method.

- The HP® 9000 Series 200/300 Workstation running Rocky Mountain BASIC 6.2 or later. IBASIC is a subset of Rocky Mountain BASIC (RMB). All IBASIC commands are compatible with RMB and thus will execute from a HP® 9000 Series 200/300 Workstation.
- A PC, running Windows 3.1 or Windows NT, with HP® BASIC for Windows and an GPIB interface card can be used.

ManualsPlus.com

HP® BASIC for Windows® PC Configuration for Windows NT® Operating System

To prepare for HP® BASIC program development utilizing Windows NT®, the external PC must be configured to operate with the Test Set.

You will need:

- an Agilent 82341B/C interface card (the Agilent 82335 card does not support Windows NT®)
- a licensed version with security key of HP® BASIC for Windows®.

How to install:

1. Install the Agilent 82341B/C into an open expansion slot. Refer to the interface card's installation guide details. Utilize the default card settings.
2. Install the SICL libraries using the SETUP32.EXE setup file.
3. Run the SICL I_O Config program to configure the card.
4. Select Agilent 82340/82341 GPIB from the available interface list of choices.
5. Select the Configure command button. Use the default settings shown by the program. This will verify that the card is functioning.
6. Install HP® BASIC for Windows 6.3 or later.
7. Run HP® BASIC for Windows.
8. Edit the AUTOST file, change line 330 as follows:
   LOAD BIN "HPIBS;DEV hpib7" !SICL Library for Agilent 82341 card
9. Re-store the AUTOST file
10. Quit HP® BASIC for Windows®
11. Run HP ®BASIC for Windows®. The program should load normally and allow you to send orders to the Test Set.

ManualsPlus.com

Program Development Procedure

As discussed in **"Overview of the Test Set" on page 22**, the Test Set has two GPIB buses, an internal GPIB at select code 8 and an external GPIB at select code 7. The Test Set's built-in IBASIC controller uses the internal GPIB to communicate with the Test Set's various instruments and devices. The process of developing a program on an external BASIC language computer utilizes this hardware feature to an advantage. First, develop the program directly on the external BASIC language computer treating the Test Set as a device on the external BASIC language computer's GPIB. For example, to setup the Test Set's RF Generator use the OUTPUT command with the Test Set's GPIB address. If the select code of the GPIB card in the external BASIC language computer is 7 and the address of the Test Set is 14 the address following the OUTPUT command would be 714. When the command executes on the external BASIC language computer the information on how the Test Set's RF Generator is to be configured is sent to the Test Set through its external GPIB bus. After the program is fully developed, making it run on the Test Set is simply a matter of changing the address of all the GPIB commands to 8XX (Test Set internal GPIB bus) and downloading the program into the Test Set's IBASIC controller and executing it.

There are two ways of allowing easy conversion of all GPIB commands to a different address. The first way is to establish a variable to which the 3-digit address number is assigned.

For example

```
10 Addr = 714 ! Sets the value of variable Addr to be 714.
20 OUTPUT Addr;"*RST"!Commands the Test Set to reset at address 714.
```

To change the address, simply change the value of variable Addr to 814.

For example

```
10 Addr = 814 !  Sets the value of variable Addr to be 814.
20 OUTPUT Addr;"*RST"! Commands the Test Set to reset at address 814.
```

A second method is to assign an I/O path to the desired I/O port.

For example

To control device #14 on the port with select code 7.

```
20 ! Establishes IO path to select code 7 address 14
10 ASSIGN @Device TO 714
30 ! Commands Test Set to reset at address 714.
20 OUTPUT @Device;"*RST"
```

To change the address, simply change line 10 to

```
10 ASSIGN @Device TO 800.
```

ManualsPlus.com

NOTE: The dedicated GPIB interface at select code 8 conforms to the IEEE 488.2 Standard in all respects but one. The difference being that each instrument on the bus does not have a unique address. The Instrument Control Hardware determines which instrument is being addressed with the command syntax. As such an explicit device address does not have to be specified. The address 800 and 814 are equally correct.

Downloading Programs to the Test Set through GPIB

An IBASIC PROGram subsystem has been developed to allow the external BASIC language controller to download programs to the Test Set through GPIB (refer to the **"PROGram Subsystem Commands" on page 434** for more information on the PROGram Subsystem). Four commands from the external BASIC language controller to the Test Set are necessary to transfer the program. The commands are executed serially allowing enough time for each command to finish executing. (The Test Set's GPIB **`Mode`** field must be set to **`Talk&Lstn`**, and the TESTS (IBASIC CONTROLLER) screen must be displayed).

1. **`OUTPUT 714;"PROG:DEL:ALL"`**

   Deletes any programs that reside in Test Set RAM.

2. **`OUTPUT 714;"PROG:DEF #0"`**

   Defines the address in Test Set RAM where the downloaded program will be stored.

3. **`LIST #714`**

   Causes all program lines to transfer over GPIB to the Test Set which is at address 714.

4. **`OUTPUT 714;" "END`**

   Defines end of download process by generating an EOI command.

After the above commands complete the program code will be in the Test Set ready to run. If any bugs are detected when the program is run, the program can be uploaded back into the external BASIC language controller to correct the error. Alternately the full screen IBASIC EDIT function through RS-232 can be used to correct the error (refer to **"Method #2. Developing Programs on the Test Set Using the IBASIC EDIT Mode" on page 417** for details).

After the program is working properly in the Test Set IBASIC environment, it should be stored for backup purposes.

ManualsPlus.com

Uploading Programs from the Test Set to an External BASIC Controller through GPIB

To upload a program from the Test Set to an external BASIC language controller through GPIB the following program, which uses a command from the PROGram subsystem to initiate the upload, must be running on the external BASIC language controller. The uploaded program is stored to a file specified by the user.

In the following program the external BASIC language controller is a PC running TransEra HT BASIC. The file is stored to the C:\HTB386 directory. If the external BASIC language controller is an HP® 9000 Series 200/300 Workstation, modify the mass storage volume specifier appropriately. After running the program, the uploaded program code will be in the designated file. Use the GET command to retrieve the file for editing.

```
10    ! PROGRAM TO UPLOAD IBASIC CODE FROM TEST SET TO BASIC CONTROLLER THROUGH GPIB.
20    !#####################################################################
30    !
40    ! The file for uploaded code will be "C:\htb386\code".
50    ! If you want to use a different file or directory, modify the two lines
60    ! with the labels "File_name_1" and "File_name_2".
70    !
80    !#################################################################
90    Addr=714                                  !Test Set GPIB address
100   ALLOCATE Line$[200]
110   PRINTER IS 1
120   CLEAR SCREEN
130   DISP "It may be several minutes before code begins transferring if the program is
long"
140   OUTPUT Addr;"*RST"                        !Reset the Test Set
150   OUTPUT Addr;"DISP TIB"                    !Displays the IBASIC screen
160   OUTPUT Addr;"PROG:EXEC 'CLS'"             !Clears the Test Set display
170   OUTPUT 714;"PROG:DEF?"                    !Initiates the upload of whole program
180   ENTER Addr USING "X,D,#";Count_len        !Number of lines in program
190   ENTER Addr USING VAL$(Count_len)&"D,#";Char_count !Number of characters
200   !
210 File_name_1:  CREATE ASCII "C:\htb386\code",(1.05*Char_count/256)+5
220   ! Number of records reserved for upload.
230 File_name_2:  ASSIGN @File TO "C:\htb386\code"
240   !
250   DISP "Transferring code from Test Set"
260   LOOP     !Program transfer loop.
270   ENTER Addr;Line$                          !CR/LF terminates each line.
280   PRINT Line$                               !Displays new lines on Test Set display.
290   OUTPUT @File;Line$                        !Transfer new line to file.
300   Char_count=Char_count-LEN(Line$)-2        !Reduces Char_count by the number of
310                                             ! characters in current line.
320   EXIT IF Char_count<=0
330   END LOOP
340   !
350   ASSIGN @File TO *                         !Cleans out file buffer.
360   ENTER Addr;Line$                          !Close off reading
370   CLEAR SCREEN
380   DISP "Transfer complete."
390   LOCAL Addr
400   END
```

ManualsPlus.com

Method #2. Developing Programs on the Test Set Using the IBASIC EDIT Mode

If a BASIC language computer is not available, program development can be done directly on the Test Set using the IBASIC EDIT mode. A terminal or PC connected to the Test Set through RS-232 is used as the CRT and keyboard for the Test Set's built-in IBASIC controller. In this method, the program always resides in the Test Set and can be run at any time. Mass storage is usually an SRAM memory card. When running IBASIC programs on the Test Set's internal controller, the Test Set displays only the IBASIC screen.

The Test Set's IBASIC controller has an editor that is interactive with a terminal or PC over the RS-232 serial port. (The editor does not work unless a terminal or PC with terminal emulator is connected to Serial Port 9.) The editor, hereafter referred to as the "IBASIC EDIT Mode", allows the programmer to develop code directly in the Test Set with no uploading or downloading. The IBASIC EDIT Mode can be used to develop programs from scratch or to modify existing programs. Refer to **"Interfacing to the IBASIC Controller using Serial Ports" on page 396** for information on connecting a terminal or PC to the Test Set.

ManualsPlus.com

Selecting the `IBASIC Command Line` Field

To use the IBASIC EDIT Mode for program development, the **`IBASIC Command Line`** field must be displayed on the Test Set and Serial Port 9 must be connected to the **`IBASIC Command Line`** field. An IBASIC command, sent as a series of ASCII characters through Serial Port 9, will appear on the **`IBASIC Command Line`** field. When a carriage return/line feed is encountered, the Test Set will attempt to execute the command. To display the **`IBASIC Command Line`** field on the Test Set execute the following steps:

1. Press the TESTS key.
2. The TESTS (Main Menu) screen will be displayed.
3. Using the rotary knob, position the cursor on the **`IBASIC Cntrl`** field and select it.
4. The TESTS (IBASIC CONTROLLER) screen will be displayed.
5. The small horizontal rectangle at the top-left is the **`IBASIC Command Line`** .

To Access the `IBASIC Command Line` Field

1. Position the cursor on the screen's upper left. This is the **`IBASIC Command Line`** field.
2. The **`IBASIC Command Line`** field does not have a title like other fields in the Test Set; it is the highlighted, horizontal 2-line "bar" just below the screen title, TESTS (IBASIC Controller).

To Use the `IBASIC Command Line` Field with the Test Set's Rotary Knob

1. Position the cursor at the **`IBASIC Command Line`** field and push the knob.
2. A **`Choices:`** field will be displayed in the lower, right corner of the display.
3. By rotating the knob, a list of ASCII characters and cursor positioning commands can be displayed on the right side of the screen.
4. When the cursor is next to the desired character or command, push the knob to select that character.
5. No external hardware is required for this entry method, but it is tedious and is recommended only for short commands. Use this method when doing simple tasks such as initializing memory cards or CATaloging a memory card.
6. Program development using the rotary knob alone is not recommended.

ManualsPlus.com

Entering and Exiting the IBASIC EDIT Mode

To enter the IBASIC EDIT Mode first position the cursor on the **`IBASIC Command Line`** field, type the word EDIT on the terminal or PC connected to the Test Set and then press the ENTER key on the terminal or PC. At this point the Test Set will fill the PC screen with 22 lines of IBASIC code from the program currently in the Test Set's RAM memory. No program lines will be displayed on the Test Set screen. If no program is currently in the Test Set's memory, the number 10 will be displayed on the terminal or PC screen. This represents program line number 10 and is displayed to allow you to begin writing an IBASIC program beginning at line number 10. The "*" annunciator will be displayed in the upper, right corner of the Test Set indicating that the IBASIC controller is running to support the full screen edit mode.

After editing is complete, exit the IBASIC EDIT Mode by pressing the terminal or PC's ESCAPE key twice or pressing the SHIFT CANCEL keys on the Test Set.

A variety of editing commands are supported by the IBASIC EDIT Mode. These commands are activated in the Test Set as escape code sequences. Most terminals and PC terminal emulator programs allow function keys to be configured with user defined escape code sequences and user defined labels for the keys. An escape command (when received by a peripheral device like a printer or the Test Set) causes the peripheral to recognize subsequent ASCII characters differently. In the case of the Test Set, escape sequences are used for executing IBASIC EDIT Mode editing commands.

For example, ESCAPE [L causes the Test Set to insert a new line number where the cursor is positioned. **Table 45 on page 420** lists the editing escape codes for the Test Set. There is no escape code for DELETE CHARACTER. Use the Backspace key for deleting. Use the arrow keys to position the cursor.

Setting Up Function Keys In Microsoft Windows Terminal

When in the TERMINAL mode, click on Settings, then Function Keys. ^[is ESCAPE in Windows Terminal. See **Table 45 on page 420** for the escape codes.

NOTE: Windows Terminal seems to work best when a mouse is used to access the function keys, not the keyboard. Also, scrolling a program works best when the Terminal window display is maximized).

ManualsPlus.com

Setting Up Function Keys in Agilent AdvanceLink

- From the **Main** (highest level) screen, set up the 8 softkeys as follows:
  1. Display User Definition screens by pressing Ctrl F9.
  2. Enter all the LABEL titles for K1 through K8.
  3. Activate the "Display Function" feature by pressing softkey **F7**.
  4. Now you can enter the escape codes for each edit command aligned with the soft key definitions you just entered. With the Display Functions key pressed, when you press the escape key, a left arrow will be displayed.
- Once you have set up all 8 keys, you activate them by pressing Shift F12. To deactivate your user defined softkeys, press F12.
- (- is ESCAPE in Agilent AdvanceLink. See **Table 45 on page 420** for the escape codes.

Setting Up Function Keys in ProComm

ProComm does not have function keys. However, escape sequences can be assigned to number keys 0 through 9 by using the Keyboard Macro function. This function is accessed by keying Alt+M. There is no method of displaying key labels so they will have to be recorded elsewhere. See the ProComm manual for further information.

Table 45 Edit Mode Escape Code Commands

Function Key Names	Windows Terminal Escape Codes	Agilent AdvanceLink Escape Codes
INSERT LINE	^[[L	(-[L
DELETE LINE	^[[M	(-[M
GO TO LINE	^[g	(-g
CLEAR LINE	^[[K	(-[K
PAGE UP	^[OQ	(-OQ
PAGE DOWN	^[OR	(-OR
RECALL LINE	^[r	(-r
BEGIN LINE	^[OP	(-OP
END LINE	^[OS	(-OS

ManualsPlus.com

Method #3. Developing Programs Using Word Processor on a PC (Least Preferred)

The third method of IBASIC program development is to write the program using a word processor on a PC, save it as an ASCII file, and then download it into the Test Set through the serial port. The benefit of this method is that it can be done on the PC without connecting to a Test Set until download and no BASIC language compiler/interpreter is needed. The primary drawback is that no syntax checking occurs until the downloaded program is run on the Test Set. A second drawback is that, especially for longer programs (>100 lines), it is very time-consuming to transfer the code into the Test Set.

Configuring a Word Processor

The word processor on which the IBASIC code is developed must be able to save the file in ASCII format and have an ASCII file transfer utility. This is necessary because word processors use a variety of escape codes to mark all the special display formats such as bold face, font size, indented text, and the like. When a word processor file is stored in ASCII format, all escape codes are stripped off. The ASCII file transfer utility is used to transfer the file to the Test Set.

NOTE: The GET command can be used on external BASIC language controllers to load ASCII files containing IBASIC programs developed on word processors. Once loaded, the steps for downloading described in **"Method #1. Program Development on an External BASIC Language Computer" on page 411** can be used to transfer the program to the Test Set.

ManualsPlus.com

Writing Lines of IBASIC Code on a Word Processor

When writing IBASIC programs, follow these steps to ensure that the Test Set will accept the code when it is downloaded.

1. Always begin new lines at the far left margin. Never use a leading space or tab.
2. Number each consecutive line just like an IBASIC language program.
3. Typically begin with 10 and increment by ten for each consecutive line.
4. Do not leave any space or double space between lines.
5. Make sure to use hard carriage return / line feeds at the end of each line.
6. When saving the completed program, save it as an ASCII file. Some word processors have ASCII options which require that the user specify CR/LF at the end of each line. It is important that each line end with a carriage return / line feed.
7. Experiment with a short program first to make sure everything is working correctly.

ManualsPlus.com

Transferring Programs from the Word Processor to the Test Set

For short (less than 100 lines) programs, use an ASCII file transfer utility on the PC to send the program, one line at a time, down to the Test Set over RS-232 directly into the IBASIC Command Line field. The Test Set must be configured to receive serial ASCII characters by positioning the Test Set cursor at the IBASIC Command Line field as explained under **"Method #2. Developing Programs on the Test Set Using the IBASIC EDIT Mode" on page 417**. With this setup, when ASCII characters are received they are sent to the IBASIC Command Line field. When a carriage return / line feed is received, the Test Set will parse the line into the IBASIC program memory. Each line takes about two seconds to scroll in and be parsed. This becomes very time consuming for long programs. An alternative for longer programs is discussed later in this section.

To start the transfer process make sure there is no program in the Test Set's IBASIC RAM memory by executing a SCRATCH command from the IBASIC Command Line.

The following example shows how to transfer a short program (<100 lines) using Microsoft Windows Terminal.

1. Make sure the Test Set cursor is in the upper left of the IBASIC Command Line field.
2. Select the **`Terminal application`** in the Accessories Group. Set it up as described in earlier in this chapter.
3. Select the following:
   - Settings
   - Text Transfers
   - Flow Control: Line at a Time
   - Delay Between Lines: 25/10 Sec
   - Word Wrap
   - Outgoing Text at Column: Off.
4. Select the following:
   - Transfers
   - Send Text File
   - Following CR:
     - Strip LF selected
     - Append LF not selected.
5. Select the text file to be transferred and begin the transfer by selecting (OK).

ManualsPlus.com

As the transfer starts the **`IBASIC Command Line`** field will intensify and characters will scroll in left to right. As each line is finished the "*" annunciator will be displayed, for about 0.5 seconds, in the upper, right corner of the Test Set indicating that the IBASIC controller is running as the line is parsed. If another line is sent before this parsing is complete, the Test Set will beep indicating an error, and the next line of the transfer will be rejected.

If the transfer is rejected, the transfer must be halted and the delay between lines increased to a slightly higher number. Start the transfer again from the beginning. When all lines have transferred, list the program to verify it was completely received. At this time, the program is ready to run. The RUN command can be keyed in from the PC or the K1 Run key in the TESTS (IBASIC Controller) screen can be pressed.

NOTE: Do not press the Run Test key in the TESTS (Main Menu) screen as this will scratch the program you just loaded and look to the memory card for a procedure file.

For longer programs (greater than 100 lines), transferring the ASCII text file directly into the IBASIC program memory through the RS-232 serial port is too time consuming. To speed the process up, it is necessary to transfer the program using a two step process.

1. Transfer the ASCII text file directly to a Test Set mass storage location (typically an SRAM card).
2. Perform a GET command to bring the program from mass storage into the IBASIC program memory.

To perform the ASCII text file transfer for long programs, an IBASIC program, running in the Test Set, is required to manage the transfer. A suitable program titled "ASCII_DN" (for ASCII downloader) is shown on the following page.

The ASCII_DN program runs on the Test Set and directs ASCII characters coming in Serial Port 9 directly to a file named TEMP_CODE on an SRAM card. The program creates the TEMP_CODE file on the SRAM card with a size of 650 records (166 Kbytes or enough for about 6600 lines of ASCII text). When the program is run, it displays **`Ready to receive ASCII file data`**. When this prompt is displayed, initiate the transfer of the ASCII text file representing the program from the PC to the Test Set. Shown below are two methods of sending an ASCII file from the PC to the Test Set. Both methods require that the ASCII_DN program be running in the Test Set when the transfer begins. The ASCII_DN program can be transferred into the Test Set either by typing it in using the IBASIC EDIT Mode described earlier, or downloading it from an ASCII text file one line at a time as explained earlier.

ManualsPlus.com


```
10  ! ASCII_DN
20  ! Program to download ASCII program file from PC to the Test Set through RS-232
30  ! ##########################################################################
40  !
50  ! This program must be loaded into the Test Set and run on the Test Set.
60  ! It directs ASCII characters that come in the Serial Port 9 to a file
70  ! named "TEMP_CODE" on an SRAM card. After the transfer is complete,
80  ! you must SCRATCH this program and GET the transferred program from
90  ! the "TEMP_CODE" file.
100 !
110 !  ##########################################################################
120   COM /File_name/ File_name$[10]
130   DIM In$[200]
140   File_name$="TEMP_CODE"                    !File name on RAM card
150   CLEAR SCREEN
160   CLEAR 9                                   !Clears Test Set serial bus
170   OUTPUT 800;"*RST"
180 ! Set up Test Set Serial Port 9 to receive ASCII text file
190    OUTPUT 800;"CONF:SPORT:BAUD '9600';PAR 'None';DATA '8 Bits'"
200    OUTPUT 800;"CONF:SPORT:STOP '1 Bit';RPAC 'Xon/Xoff';XPAC 'Xon/Xoff'"
210    OUTPUT 800;"CONF:SPORT:SIN 'IBASIC';IBECHO 'OFF'"
220  CALL Code(File_name$,In$)
230  END
240 Purge_it:SUB Purge_it                      !Purges File_name on card
250    COM /File_name/ File_name$
260    OFF ERROR
270    PURGE File_name$&":INTERNAL"
280    SUBEND
290 Code:SUB Code(File_name$,In$)
300      ON ERROR CALL Purge_it     !Branches if CREATE statement returns error
310      CREATE ASCII File_name$&":INTERNAL",650     !Creates file on card
320      OFF ERROR
330      ASSIGN @File TO File_name$&":INTERNAL"
340      PRINT TABXY(1,5);"Ready to receive ASCII file data."
350      PRINT
360 Begin:ON TIMEOUT 9,1 GOTO Begin            !Loops until data begins coming
370       ENTER 9;In$
380       OUTPUT @File;In$
390       PRINT In$
400 Transfer:LOOP     !Loops to bring in ASCII file one line at a time
410       ON TIMEOUT 9,5 GOTO Done     !Exit loop if data stops for >5 sec.
420       ENTER 9;In$
430       PRINT In$
440       OUTPUT @File;In$
450       END LOOP
460 Done:ASSIGN @File TO *
470     CLEAR SCREEN
480 ! Returns Test Set Serial Port 9 input to "instrument" allowing serial
490 ! communication to the IBASIC Command line field.
500     OUTPUT 800;"CONF:SPORT:SIN 'Inst';IECHO 'ON';IBECHO 'ON'"
510     PRINT TABXY(1,5);"Down load of ASCII file is complete."
520   SUBEND
```

ManualsPlus.com

Sending ASCII Text Files Over RS-232 With Windows Terminal

Set up the Windows Terminal emulator software on the PC as covered in **"Setting Up Microsoft Windows Terminal on your PC (Windows Version 3.1)" on page 404**. Load and run the ASCII_DN download program in the Test Set's IBASIC controller. When the prompt **`Ready to receive ASCII file data`** is displayed on the Test Set, make the following settings in Windows Terminal on the PC:

1. Select **`Settings`**.
2. Select **`Text Transfers`**.
3. Select **`Flow Control: Standard Flow Control`**.
4. Select **`Word Wrap Outgoing Text at Column: unselected`**.

   This will use **`Xon/Xoff flow`** control by default.
5. Select **`OK`**.
6. Select **`Transfers`**.
7. Select **`Send Text File`**.
8. Set **`Strip LF`** off and **`Append LF`** off. (It is important that the line feeds that are in the ASCII file not be stripped or the file transfer will not work).
9. Select or enter the file name to transfer.
10. Begin the transfer by selecting **`OK.`**

At this point, each line of the program will rapidly scroll across the screen of the Test Set. When the transfer is finished, the prompt **`Down load of ASCII file complete.`** will be displayed on the Test Set.

Before running the downloaded program, execute a SCRATCH command on the **`IBASIC Command Line`** to remove the ASCII_DN download program from Test Set memory.

Next, execute a GET TEMP_CODE command on the IBASIC Command Line. This will load the ASCII text into the IBASIC program memory.

Finally, execute a RUN command on the IBASIC Command Line. This will run the program. If any syntax errors are present in the program IBASIC will generate the appropriate error messages.

ManualsPlus.com

Sending ASCII Text Files over RS-232 with ProComm Communications Software

Set up the ProComm terminal emulator software on the PC as covered in **"Setting Up ProComm Revision 2.4.3 on your PC" on page 405**. On the Test Set, enter and run the ASCII_DN download program in the IBASIC controller. When the prompt **`Ready to receive ASCII file data`** is displayed on the Test Set, make the following settings in the ProComm terminal emulator on the PC:

NOTE: The ProComm terminal emulator views the file transfer as sending the file from the PC "up" to the Test Set. This is opposite to the direction used by the previous Windows Terminal example. Therefore, with ProComm an ASCII "upload" transfer is used.

1. Press Alt+F10 to display the ProComm help screen.
2. Press Alt+P to display the **`SETUP MENU`**.
3. Select item 6: **`ASCII TRANSFER SETUP`**.
4. Set Echo locally: **`NO`**.
5. Expand blank lines: **`YES`**.
6. Pace character: **`0`**.
7. Character pacing: **`15`**.
8. Line pacing: **`10`**.
9. CR translation: **`NONE, LF`**.
10. Translation: **`NONE`** (This is important since the default setting will strip line feeds and this will cause the transfer to never begin).
11. Select the Escape key to exit setup mode and return to the main screen.
12. Press Alt F10 to access the help menu.
13. To begin sending the file, select **`PgUp`**.
14. In the **`UPLOAD`** screen, select **`7 ASCII`** protocol.
15. Run the **`ASCII_DN`** download program on the Test Set.
16. When the Test Set displays **`Ready to receive ASCII file data`**, press Enter on the PC to begin the transfer. At this point, each line of the program will rapidly scroll across the screen of the Test Set. When the transfer is finished, the download program will display **`Down load of ASCII file complete.`**, and the program file will be stored on the SRAM card in the **`TEMP-CODE`** file.
17. Before running the transferred program, execute a SCRATCH command on the IBASIC Command Line line to remove the ASCII_DN download program from Test Set memory.
18. Next, execute a GET TEMP_CODE command on the IBASIC Command Line. This will load the ASCII text into the IBASIC program memory.
19. Finally, execute a RUN command on the IBASIC Command Line. This will run the program. If any syntax errors are present in the program IBASIC will generate the appropriate error messages.

ManualsPlus.com

Uploading Programs from the Test Set to a PC

As an overview, the following steps must be performed:

1. The Test Set must output the program over Serial Port 9.
2. The PC must receive the data through its serial port and direct the data to a file on disk. This can be done by a terminal emulator program such as Windows Terminal, Pro-Comm, or Agilent AdvanceLink. This requires having the serial port connection established as outlined in **"Interfacing to the IBASIC Controller using Serial Ports" on page 396**.

To configure the Test Set to output the program to Serial Port 9 position the cursor on the IBASIC Command Line field. Execute the command PRINTER IS 9. This command sets Serial Port 9 as the default printer port. When PRINT commands are executed, ASCII characters will be sent to Serial Port 9.

On the PC, select **`Receive Text File`** in Windows Terminal or **`Receive Files`** (PgDn which is called Download) in ProComm. Enter a file name, then initiate the file transfer. The PC is now looking for ASCII text to come in the serial port.

Load the program to be transferred into the Test Set. Execute the IBASIC LIST command on the IBASIC Command Line. The program listing will be sent to Serial Port 9 and be received by the terminal emulator software on the PC. When the listing is finished, terminate the file transfer by selecting Stop on Windows or Escape on ProComm.

ManualsPlus.com

Serial I/O from IBASIC Programs

There are two serial ports available for I/O (input / output) to peripherals external to the Test Set. To bring data in to the Test Set through the serial port(s) use the IBASIC ENTER command. To send data out, use the OUTPUT command.

Serial Ports 9 and 10

The Test Set uses a small RJ-11 female connector on the rear panel for connecting to the two serial ports. This connector has six wires, 3 for Serial Port Address 9 and 3 for Serial Port Address 10. For information about serial port configuration, refer to the **“Test Set Serial Port Configuration” on page 396**. For connection information, refer to **Figure 26 on page 400**.

Before using either port, the RS-232 protocol must be established by setting baud rate, pacing, and the other settings as explained in **“Test Set Serial Port Configuration” on page 396**. Functionally, from an I/O perspective, the two serial ports are identical. However, operationally there is one major difference. The Serial Port Address 9 settings are adjustable on the I/O CONFIGURE screen or with IBASIC commands, while the Serial Port 10 settings are adjustable only with IBASIC commands. There is no screen for Serial Port 10 settings. For more information, see **Chapter 4, “GPIB Commands,”** which gives the command syntax for Serial Port 9 and 10.

ManualsPlus.com

Example IBASIC Program Using Serial Port 10

The following program illustrates I/O to both serial ports. The program sends a prompt message to a terminal connected to Serial Port 9 and waits for a response from the user at the terminal. When the response is received from the terminal connected to Serial Port 9, a series of ASCII characters are sent out Serial Port 10.

```
10 !....ASCII CHARACTER CYCLER...........
30 !....be connected to a terminal at 9600 baud.
40 !....Outputs ASCII characters on Serial Port 10 beginning with
   ASCII
50 !......character 32 (space) and ending with ASCII character 126
   (~).
60 !......Characters are output with no CR/LF
70 OUTPUT 9;"When you are ready to send data on port10,press ENTER"
80 OUTPUT 800;"CONF:SPOR:SIN 'IBASIC';BAUD ‘9600'"
90 !Allows IBASIC to read port 9
100 DIM A$[10]
110   ENTER 9;A$ !Program waits here until CR/LF is received.
120 !........
130 I=32
140 HILE I<=126
150 OUTPUT 10 USING "K,#";CHR$(I)
160 !Outputs characters all on one line.
170 OUTPUT 10 USING "K,#";CHR$(I)
180 !Outputs characters all on one line.
190 END WHILE
200 OUTPUT 800;"CONF:SPOR:SIN 'Inst'" !Sets port 9 to IBASIC entry
field.
180 EXECUTE ("CURSOR HOME") !Places cursor at left of IBASIC entry
field
190 END
```

ManualsPlus.com

Serial Port 10 Information

Serial Port 10 is sometimes called Serial Port B in Test Set documentation and programs.

The default Serial Port 10 settings are the same as Serial Port 9. They are

1. Serial Baud rate: **9600**
2. Parity: **None**
3. Data Length: **8 Bits**
4. Stop Length: **1 Bit**
5. Receive and Transmit Pacing: **Xon/Xoff**
6. Serial in: **Not available for Port 10**
7. IBASIC and Instrument Echo: **Not available for Port 10**

There is no Test Set screen that shows Serial Port 10's settings. Therefore, to know Serial Port 10 settings, they must either be set or queried using IBASIC commands.

For example, the following IBASIC program queries the baud rate setting of Serial Port 10:

```
10 DIM Setting$[20]
20 OUTPUT 800;"CONF:SPB:BAUD?" !Initiates a query.
30 ENTER 800;Setting$
40 DISP Setting$
50 END
```

This program returns a quoted string. If the baud rate is set to 9600, the returned ASCII character string is **9600**. Serial Port 10 settings are held in non-volatile memory. They remain unchanged until modified using an IBASIC command.

ManualsPlus.com

PROGram Subsystem

Introduction

The PROGram Subsystem provides a set of commands which allow an external controller to generate and control an IBASIC program within the Test Set. The PROGram Subsystem in the Test Set is a limited implementation of the PROGram Subsystem defined in the Standard Commands for Programmable Instruments (SCPI) Standard. The PROGram Subsystem commands, as implemented in the Test Set, can be used to

- download an IBASIC program from an external controller into the Test Set
- upload an IBASIC program from the Test Set into an external controller
- control an IBASIC program resident in the Test Set from an external controller
- set or query program variables within an IBASIC program which is resident in the Test Set
- execute IBASIC commands in the Test Set's IBASIC Controller from an external controller

SCPI PROGram Subsystem

The SCPI PROGram Subsystem was designed to support instruments which can store multiple programs in RAM memory at the same time. The SCPI PROGram Subsystem provides commands which allow multiple programs to be named, defined and resident in the instrument at the same time. The Test Set does not support this capability.

For complete information on the SCPI PROGram Subsystem refer to the Standard Commands for Programmable Instruments (SCPI) Standard. If you are not familiar with SCPI, it is recommended that you obtain a copy of the book: *A Beginner's Guide to SCPI* (ISBN 0-201-56350, Addison-Wesley Publishing Company).

Test Set PROGram Subsystem

The Test Set was designed to store only one IBASIC program in RAM memory at any given time. The PROGram Subsystem commands, as implemented in the Test Set, operate differently than described in the SCPI Standard. In addition, the SCPI PROGram Subsystem commands which were designed to support multiple programs are not supported in the Test Set.

ManualsPlus.com

Supported SCPI Commands

The Test Set supports the following subset of the :SELected SCPI commands.

- :SELected:DEFine
- :SELected:DEFine?
- :SELected:DELete:ALL
- :SELected:EXECute
- :SELected:NUMBer
- :SELected:NUMBer?
- :SELected:STATe
- :SELected:STATe?
- :SELected:STRing
- :SELected:STRing?
- :SELected:WAIT

Unsupported SCPI Commands

The Test Set does not support the following SCPI commands.

- :CATalog?
- :SELected:DELete:SELected
- :SELected:MALLocate
- :SELected:MALLocate?
- :SELected:NAME
- :SELected:NAME?
- :EXPLicit:DEFine
- :EXPLicit:DEFine?
- :EXPLicit:DELete
- :EXPLicit:EXECute
- :EXPLicit:MALLocate
- :EXPLicit:MALLocate?
- :EXPLicit:NUMBer
- :EXPLicit:NUMBer?
- :EXPLicit:STATe
- :EXPLicit:STATe?
- :EXPLicit:STRing
- :EXPLicit:STRing?
- :EXPLicit:WAIT

NOTE: Sending the Test Set any of the unsupported SCPI PROGram Subsystem commands can result in unexpected and/or erroneous operation of IBASIC. This may require the Test Set's RAM to be initialized from the SERVICE screen to regain proper IBASIC operation.

ManualsPlus.com

PROGram Subsystem Commands

See the syntax diagram, **"Program" on page 177**, for PROGram Subsystem command syntax rules.

Command Notation

The following notation is used in the command descriptions:

Letter case (uppercase or lowercase) is used to differentiate between the short form (the uppercase characters) and long form (the whole keyword) of the command.

The lower case letters in the keyword are optional; they can be deleted and the command will still be understood by the Test Set.

[] = Optional keyword; this is the default state, the Test Set will process the command to have the same effect whether the optional keyword is included by the programmer or not.

<> = Specific SCPI-defined parameter types. Refer to the SCPI Standard for definitions of the SCPI-defined parameter types.

{} = One or more parameters that must be included one or more times.

| = Separator for choices for a parameter. Can be read the same as "or."

Command Descriptions

NOTE: When a PROGram Subsystem command is sent to the Test Set through GPIB from an external controller the Test Set is put into REMOTE mode. The Test Set must be put in LOCAL mode to use the front-panel keys or to use the serial ports to input data into the IBASIC Command line.

[:SELected] All the commands under this keyword access the IBASIC program currently resident in the Test Set. Note that this keyword is optional in the command syntax.

Syntax

```
PROGram[:SELected]
```

:DEFine <program> The DEFine command is used to create and download an IBASIC program into the Test Set from an external controller.

To download an IBASIC program, any currently resident IBASIC program must first be deleted using the :DELete:ALL command. Attempting to download a new IBASIC program while an IBASIC program is currently resident causes **`IBASIC Error: -282 Illegal program name`**.

ManualsPlus.com

NOTE: It is possible for the PROGram Subsystem to think that there is an IBASIC program resident in the Test Set when, in actuality, there is not. This situation would exist for example, if an IBASIC program had been created and downloaded using the :DEFine command and then deleted, from the front panel, using the SCRATCH ALL command from the IBASIC Command line. Under this circumstance IBASIC Error -282 would be generated when another attempt is made to download a program with the PROGram Subsystem. It is recommended that the :DELete:ALL command always be sent immediately before the :DEFine command.

The IBASIC program downloaded into the Test Set must be transferred as IEEE 488.2 Arbitrary Block Program Data. Refer to the IEEE Standard 488.2-1987 for detailed information on this data type. Two syntax forms are provided with the Arbitrary Block Program Data data type: one form if the length of the program is known and another one if it is not.

Syntax (length of program not known)

```
PROGram[:SELected]:DEFine <#0><program><NL><END>
```

The following notation is used in the command description:

<#0> = IEEE 488.2 Arbitrary Block Program Data header.

<program> = the IBASIC program sent as 8 bit data bytes.

<NL> = new line = ASCII line-feed character.

<END> = IEEE 488.1 END message. This terminates the block transfer and is only sent once with the last byte of the indefinite block data.

Example BASIC program to download an IBASIC program to Test Set

```
10 OUTPUT 714;"PROG:DEL:ALL"!Delete current program
20 OUTPUT 714;"PROG:DEF #0"!Create program, send header
30 OUTPUT 714;"10 FOR J = 1 TO 10"!1st prog line
40 OUTPUT 714;"20 DISP J"!2nd prog line
50 OUTPUT 714;"30 BEEP"!3rd prog line
60 OUTPUT 714;"40 NEXT J"!4th prog line
70 OUTPUT 714;"50 END"END!Send END message at end of last line
80 END
```

ManualsPlus.com

Syntax (length of program known)

```
PROGram[:SELected]:DEFine <#><of digits in count field>
<count field: of data bytes in program><program data bytes>
```

The following notation is used in the command description:

The data starts with a header which begins with a “#”, followed by a single non-zero digit in the range 1-9 which specifies the number of digits in the following count field, followed by a series of digits in the range of 0-9 which gives the number of data bytes being sent, followed by the number of data bytes specified by the count field.

Example

```
#16<data byte><data byte><data byte><data byte><data byte><data by
te>
```

Example BASIC program to download an IBASIC program to Test Set

```
10 OUTPUT 714;"PROG:DEL:ALL"  !Delete current program
20 OUTPUT 714;"PROG:DEF #257" !Create program, send header
30 OUTPUT 714;"10 FOR J = 1 TO 10" !18 characters + CR + LF
40 OUTPUT 714;"20 DISP J" !9 characters + CR + LF
50 OUTPUT 714;"30 BEEP"   !7 characters + CR + LF
60 OUTPUT 714;"40 NEXT J" !9 characters + CR + LF
70 OUTPUT 714;"50 END"!6 characters
80 END
```

:DEFine? The :DEFine? query command is used to upload an IBASIC program from the Test Set to an external controller.

The IBASIC program uploaded to the external controller is transferred as IEEE 488.2 Definite Length Arbitrary Block Response Data. The following information describes some of the characteristics of the IEEE 488.2 Definite Length Arbitrary Block Response Data type. Refer to the IEEE Standard 488.2-1987 for detailed information on this data type.

The data starts with a header which begins with a “#”, followed by a single non-zero digit in the range 1-9 which specifies the number of digits in the following count field, followed by a series of digits in the range of 0-9 which gives the number of data bytes being sent, followed by the number of data bytes specified by the count field.

ManualsPlus.com

Example

```
#16<data byte><data byte><data byte><data byte><data byte><data
byte>
```

The transfer is terminated by the transmission, from the Test Set to the external controller, of the response message terminator (NL & END messge).

<NL> = new line = ASCII linefeed character.

<END> = IEEE 488.1 END message.

Syntax

```
PROGram[:SELected]:DEFine?
```

Example BASIC program to upload an IBASIC program from Test Set

```
10  DIM Prog_line$[200]!Holds longest program line in Test Set
20  DIM File_name$[10]!Holds the name of file to store IBASIC pro-
gram
30  LINPUT "Enter name of file to store IBASIC program
   in:",File_name$
40 OUTPUT 714;"PROG:DEF?"
50  ENTER 714 USING "X,D,#";Count_length !Get length of count field
60  !Get number of characters in program, includes CR/LF on each line
70  ENTER 714 USING VAL$(Count_length)&"D,#";Chars_total
80  !Create ASCII file to hold program, add 5 records for buffer
90 CREATE ASCII File_name$,(Chars_total/256)+5
100 ASSIGN @File TO File_name$
110 LOOP
120 ENTER 714;Prog_line$ !Read in one program line
130 OUTPUT @File;Prog_line$ !Store in file
140   Chars_xferd=Chars_xferd+LEN(Prog_line$)+2 !CR/LF not read
150 EXIT IF Chars_xferd>=Chars_total
160 END LOOP
170   ENTER 714;Msg_terminator$ !Terminate the block data transfer
180 ASSIGN @File TO *
190 END
```

ManualsPlus.com

:DELete:ALL The :DELete:ALL command is used to delete an IBASIC program in the Test Set. If the IBASIC program in the Test Set is in the RUN state, an **`IBASIC Error: -284 Program currently running`** error is generated and the program is not deleted.

Syntax

```
PROGram[:SELected]:DELete:ALL
```

Example

```
OUTPUT 714;"PROGram:SELected:DELete:ALL"
or
OUTPUT 714;"PROG:DEL:ALL"
```

:EXECute <program_command> The :EXECute command is used to execute, from an external controller, an IBASIC program command in the Test Set's built-in IBASIC Controller.

<program_command> is string data representing any legal IBASIC command. If the string data does not represent a legal IBASIC command, an **`IBASIC Error: -285 Program syntax error`** is generated.

Any IBASIC program in the Test Set must be in either the PAUSed or STOPped state before the external controller issues the :EXECute <program_command> command. If the IBASIC program is in the RUN state, an **`IBASIC Error: -284 Program currently running`** is generated.

Syntax

```
PROGram[:SELected]:EXECute <delimiter><program_command><delimiter>
```

The following notation is used in the command description:

<delimiter> = IEEE 488.2 <string data> delimiter, single quote or double quote, must be the same.

Example

```
OUTPUT 714;"PROGram:SELected:EXECute 'CLEAR SCREEN'"
 or
OUTPUT 714;"PROG:EXEC 'CLEAR SCREEN'"
```

ManualsPlus.com

:NUMber <varname>{,<nvalues>} The :NUMBer command is used to set, from an external controller, the value of numeric variables or arrays in an IBASIC program in the Test Set. <varname> is the name of an existing numeric variable or array, and can be sent as either character data (<varname> not enclosed in quotes) or string data (<varname> enclosed in quotes). <nvalues> is a list of comma-separated <numeric_values> which are used to set the value of <varname>.

NOTE: If the variable name <var_name> is longer than 12 characters it must be sent as string data (<var_name> enclosed in quotes). For example, OUTPUT 714;"PROG:NUMB 'Var_name',10".

Attempting to send a <var_name> longer than 12 characters as character data (<var_name> *not* enclosed in quotes) will generate the following error:

`HP-IB Error: -112 Program mnemonic too long`.

If an attempt is made to set the value of a numeric variable or array and no IBASIC program is in the Test Set an **`IBASIC Error: -282 Illegal program name`** is generated. If an attempt is made to set the value of a numeric variable or array and the numeric variable specified in <varname> does not exist in the program an **`IBASIC Error: -283 Illegal variable name`** is generated. If the specified numeric variable cannot hold all of the specified <numeric_values> an **`IBASIC Error: -108 Parameter not allowed`** is generated.

Syntax

```
PROGram[:SELected]:NUMBer <varname>{,<nvalues>}
```

Example setting the value of a simple variable

```
OUTPUT 714;"PROGram:SELected:NUMBer Variable,15"
 or
OUTPUT 714;"PROG:NUMB Variable,15"
```

Example setting the value of a one dimensional array [Array(5)] with 6 elements

```
OUTPUT 714;"PROGram:SELected:NUMBer Array,0,1,2,3,4,5"
or
OUTPUT 714;"PROG:NUMB Array,0,1,2,3,4,5"
```

NOTE: Individual array elements cannot be set with the :NUMBer command.

ManualsPlus.com

Example setting the value of a two dimensional array [Array(1,2)] with 6 elements

```
OUTPUT 714;"PROGram:SELected:NUMBer Array,0,1,2,3,4,5"
 or
OUTPUT 714;"PROG:NUMB Array,0,1,2,3,4,5"
```

Arrays are filled by varying the right-most dimension the fastest. After executing the above statement the array values would be, Array(0,0)=0, Array(0,1)=1, Array(0,2)=2, Array(1,0)=3, Array(1,1)=4, Array(1,2)=5.

NOTE: Individual array elements cannot be set with the :NUMBer command.

:NUMber? <varname> The :NUMBer? query command is used to return, to an external controller, the current value of numeric variables or arrays in an IBASIC program in the Test Set. <varname> is the name of an existing numeric variable or array in the IBASIC program, and can be sent as either character data (name not enclosed in quotes) or string data (name enclosed in quotes).

NOTE: Attempting to send a <var_name> longer than 12 characters as character data (<var_name> *not* enclosed in quotes) will generate the following error:

If the variable name <var_name> is longer than 12 characters it must be sent as string data (<var_name> enclosed in quotes). For example, OUTPUT 714;"PROG:NUMB "Var_name"".

`HP-IB Error: -112 Program mnemonic too long`.

For simple variables the value is returned as a series of ASCII characters representing a numeric value in scientific notation (+3.00000000000E+000). For arrays the values are returned as a comma separated list of ASCII characters representing a numeric value in scientific notation. For example, +3.00000000000E+000,+3.00000000000E+000,+3.00000000000E+000, etc. Array values are sent by varying the rightmost dimension of the array the fastest.

If an attempt is made to query the value of a numeric variable or array and no IBASIC program is in the Test Set an **`IBASIC Error: -283 Illegal variable name`** is generated. If an attempt is made to query the value of a numeric variable or array and the variable specified in <varname> does not exist in the program an **`IBASIC Error: -283 Illegal variable name`** is generated.

ManualsPlus.com

Syntax

```
PROGram[:SELected]:NUMBer? <varname>
```

NOTE: The program commands and syntax used to enter data from the Test Set into the external controller will depend upon the programming language used in the external controller. Considerations such as type conversion (integer to real, real to complex, etc.), the sequence in which values are entered into arrays, the capability to fill an entire array with a single enter statement, etc. will depend upon the capabilities of the programming language used in the external controller. The examples which follow represent the capabilities of Rocky Mountain BASIC programming language running on an HP® 9000/300 Series Controller.

Example querying the value of a simple variable

```
OUTPUT 714;"PROGram:SELected:NUMBer? Variable"
ENTER 714;Value
 or
OUTPUT 714;"PROG:NUMB? Variable"
ENTER 714;Value
```

This example assumes that the variable named Value in the ENTER statement is the same type as the variable named Variable in the IBASIC program.

Example querying the value of a one dimensional array [Array(5)] with 6 elements

```
OUTPUT 714;"PROGram:SELected:NUMBer? Array"
ENTER 714;Result_array(*)
 or
OUTPUT 714;"PROG:NUMB? Array"
ENTER 714;Result_array(*)
```

This example assumes that the array named Result_array(*) in the ENTER statement is dimensioned exactly the same as the array named Array in the IBASIC program.

NOTE: Individual array elements cannot be queried with the :NUMBer? command.

ManualsPlus.com

Example querying the value of a one dimensional array whose name is known but whose current size is unknown

```
10 DIM Temp$[5000] !This will hold 250 numbers @ 20 characters each
20 DIM Result_array(500) !This array will hold up to 501 values
30 OUTPUT 714;"PROG:NUMB? Array" !Query the desired array
40 ENTER 714;Temp$ !Enter the values into a temporary string variable
50 N=-1 !Initialize array pointer, assume option base 0
60 REPEAT !Start loop to take values from string and put in array
70 N=N+1 !Increment array pointer
80 Pos_comma=POS(Temp$,",") !Find comma separator
90 Result_array(N)=VAL(Temp$[1,Pos_comma-1]) !Put value into array
100 Temp$=Temp$[Pos_comma+1] !Remove value from temporary string
110 UNTIL POS(Temp$,",")=0 !Check for last value in temporary string
120 Result_array(N+1)=VAL(Temp$) !Put last value into array
130 END
```

The above example assumes that the dimensioned size of the IBASIC array is smaller than the dimensioned size of the array named Result_array.

NOTE: Individual array elements cannot be queried with the :NUMBer? command.

:STATe RUN|PAUSe|STOP|CONTinue The STATe command is used to set, from an external controller, the execution state of the IBASIC program in the Test Set. **Table 46** defines the effect of setting the execution state of the IBASIC program to a desired state from each of the possible current states.

Table 46 Effect of STATe Commands

Desired State of IBASIC Program (STATe command sent to Test Set)	Current State of IBASIC Program		
	RUNNING	**PAUSED**	**STOPPED**
RUN	HP-IB Error: -221 Settings conflict	RUNNING	RUNNING
CONT	HP-IB Error: -221 Settings conflict	RUNNING	HP-IB Error: -221 Settings conflict
PAUSE	PAUSED	PAUSED	STOPPED
STOP	STOPPED	STOPPED	STOPPED

The program execution states are defined as follows:

- RUNNING, the program is currently executing.
- PAUSED, the program has reached a break in execution but can be continued.
- STOPPED, program execution has been terminated.

ManualsPlus.com

Syntax

```
PROGram[:SELected]:STATe RUN|PAUSe|STOP|CONTinue
```

Example

```
OUTPUT 714;"PROGram:SELected:STATe RUN"
or
OUTPUT 714;"PROG:STAT RUN"
```

:STATe? The STATe? query command is used to query, from an external controller, the current execution state of the IBASIC program in the Test Set. The return data (RUN, STOP, or PAUS) is sent as a series of ASCII characters.

The program execution states are defined as follows:

- RUN, the program is currently executing.
- PAUS, the program has reached a break in execution but can be continued.
- STOP, program execution has been terminated.

Syntax

```
PROGram[:SELected]:STATe?
```

Example

```
OUTPUT 714;"PROGram:SELected:STATe?"
ENTER 714;State$
or
OUTPUT 714;"PROG:STAT?"
ENTER 714;State$
```

ManualsPlus.com

:STRing <varname>{,<svalues>} The :STRing command is used to set, from an external controller, the value of string variables or string arrays in an IBASIC program in the Test Set. <varname> is the name of an existing string variable or string array in the IBASIC program. <svalues> is a list of comma-separated quoted strings which are used to set the value of <varname>.

NOTE: If the variable name <var_name> is longer than 12 characters it must be sent as string data (<var_name> enclosed in quotes). For example, OUTPUT 714;"PROG:STR ’Var_name’,’data’".

Attempting to send a <var_name> longer than 12 characters as character data (<var_name> *not* enclosed in quotes) will generate the following error:

`HP-IB Error: -112 Program mnemonic too long`.

NOTE: If the programmer wishes to append the IBASIC “$” string identifier onto the string variable name, the string variable name must be sent as string data, that is enclosed in quotes. For example,
OUTPUT 714;"PROG:STR 'Var_name$','data'"

Appending the IBASIC “$” string identifier onto the string variable name without enclosing the string variable name in quotes will generate
`HP-IB Error: -101 Invalid character`.

If an attempt is made to set the value of a string variable or array and no IBASIC program is in the Test Set an **`IBASIC Error: -282 Illegal program name`** is generated. If an attempt is made to set the value of a string variable or array and the string variable specified in <varname> does not exist in the program an **`IBASIC Error: -283 Illegal variable name`** is generated. If a quoted string value is too long to fit into the string variable then it is silently truncated when stored into the IBASIC string variable. If the specified string variable cannot hold all of the quoted strings an **`IBASIC Error: -108 Parameter not allowed`** is generated.

ManualsPlus.com

Syntax

```
PROGram[:SELected]:STRing <varname>{,<svalues>}
```

Example setting the value of a simple string variable

```
OUTPUT 714;"PROGram:SELected:STRing Variable,'data'"
or
OUTPUT 714;"PROG:STR Variable,'data'"
```

Example of setting the value of a string array with 3 elements of 5 characters each, such as Array$(2)[5]

```
OUTPUT 714;"PROGram:SELected:STRing Array,'12345','12345','12345'
           "
or
OUTPUT 714;"PROG:STR Array,'12345','12345','12345'"
```

NOTE: With Option Base 0 set in IBASIC, array indexing starts at 0.

:STRing? <varname> The :STRing? query command is used to return, to an external controller, the current value of string variables or arrays in an IBASIC program in the Test Set. <varname> is the name of an existing string variable or string array in the IBASIC program.

NOTE: If the variable name <var_name> is longer than 12 characters it must be sent as string data (<var_name> enclosed in quotes). For example, OUTPUT 714;"PROG:STR? 'Var_name'".

Attempting to send a <var_name> longer than 12 characters as character data (<var_name> *not* enclosed in quotes) will generate the following error:

`HP-IB Error: -112 Program mnemonic too long`

NOTE: If the programmer wishes to append the IBASIC '$' string identifier onto the string variable name, the string variable name must be sent as string data, that is enclosed in quotes. For example,

OUTPUT 714;"PROG:STR? 'Var_name$'"

Appending the IBASIC '$' string identifier onto the string variable name without enclosing the string variable name in quotes will generate the following error:
`HP-IB Error: -101 Invalid character`.

ManualsPlus.com

For simple string variables the value is returned as a quoted string (“This is an example.”). For string arrays the values are returned as a comma separated list of quoted strings (“This is an example.”,“This is an example.”). The string array elements are returned in ascending order (Array$(0), Array$(1), Array$(2), etc.).

If an attempt is made to query the value of a string variable or array and no IBASIC program is in the Test Set an **`IBASIC Error: -283 Illegal variable name`** is generated. If an attempt is made to query the value of a string variable or array and the string variable specified in <varname> does not exist in the program an **`IBASIC Error: -283 Illegal variable name`** is generated.

Syntax

```
PROGram[:SELected]:STRing? <varname>
```

NOTE: The program commands and syntax used to enter string data from the Test Set into the external controller will depend upon the programming language used in the external controller. The examples which follow represent the capabilities of Rocky Mountain BASIC programming language running on an HP® 9000/300 Series Controller.

Example of querying the value of a simple string variable

```
OUTPUT 714;"PROGram:SELected:STRing? Variable"
ENTER 714;Value$
 or
OUTPUT 714;"PROG:STR? Variable"
ENTER 714;Value$
```

Example of querying the value of a string array with 3 elements of 5 characters each, such as Array$(2)[5]

```
OUTPUT 714;"PROGram:SELected:STRing? Array"
ENTER 714 USING "3(X,5A,2X)";Result_array$(*)
or
OUTPUT 714;"PROG:STR? Array"
ENTER 714 USING "3(X,5A,2X)";Result_array$(*)
```

This example assumes that the string array named Result_array$(*) is dimensioned exactly the same as the array named Array in the IBASIC program and that each element in the string array Array has five characters in it.

ManualsPlus.com

Example of querying the value of a string array whose name is known but whose current size is unknown

```
05 OPTION BASE 1
10 DIM Temp$[5000] !This will hold 5000 characters
20 DIM Temp_array$(50)[200]!Temp array: 50 elements of 200 character
30  OUTPUT 714;"PROG:STR? Array" !Query the desired array
40 ENTER 714;Temp$ !Enter the values into a temporary string variable
50 N=0 !Initialize array pointer
60  EPEAT !Start loop to take values from string and put in array
70 N=N+1 !Increment array pointer
80 Pos_comma=POS(Temp$,",") !Find comma separator
90  Temp_array$(N)=Temp$[2,Pos_comma-2] !Put value into array
100 Temp$=Temp$[Pos_comma+1] !Remove value from temporary string
110 UNTIL POS(Temp$,",")=0 !Check for last value in temporary string
120 Temp_array$(N+1)=Temp$[2,LEN(Temp$)-1]!Put last value in array
130 END
```

The above example assumes that the total number of characters in the dimensioned size of the IBASIC string array named Array is smaller than the dimensioned size of the string variable named Temp$. Also, the maximum length of any element in the IBASIC string array Array must be less than or equal to 200 characters.

:WAIT The :WAIT command stops the Test Set from executing any commands or queries received through GPIB until after the IBASIC program exits the RUN state; that is, the program is either PAUSED or STOPPED.

ManualsPlus.com

CAUTION: The Test Set will continue to process GPIB commands into the GPIB input buffer up to the point that the buffer is full. If the external controller attempts to send more commands than can fit into the GPIB input buffer before the IBASIC program is PAUSED or STOPPED, the GPIB bus will appear to be locked up. This is due to the fact that the GPIB bus and the external controller will be in a temporary holdoff state while waiting for the GPIB input buffer to empty.

If a query command is sent to the Test Set while the IBASIC program is under the influence of a :WAIT command, no data will be put into the Test Set's Output Queue until the IBASIC program is either PAUSED or STOPPED. If the external controller attempts to enter the queried data before the IBASIC program is PAUSED or STOPPED, the GPIB bus will appear to be locked up. This is due to the fact that the GPIB bus and the external controller will be in a temporary holdoff state while waiting for the data to be put into the Output queue to satisfy the enter command.

Syntax

```
PROGram[:SELected]:WAIT
```

Example

```
OUTPUT 714;"PROGram:SELected:WAIT"
or
OUTPUT 714;"PROG:WAIT"
```

ManualsPlus.com

:WAIT? The :WAIT? query command stops the Test Set from executing any commands or queries received through GPIB until after the IBASIC program exits the RUN state, that is - the program is either PAUSED or STOPPED. A 1 is returned in response to the :WAIT? query command when the IBASIC program is either stopped or paused.

CAUTION: When the :WAIT? query command is sent to the Test Set the program running on the external controller will hang on the enter or input statement until the IBASIC program is either STOPPED or PAUSED. This is due to the fact that the GPIB bus and the external controller will be in a temporary holdoff state while waiting for the Test Set to put a 1 into the Output queue to satisfy the :WAIT? query command.

Syntax

```
PROGram[:SELected]:WAIT?
```

Example

```
OUTPUT 714;"PROGram:SELected:WAIT?"
ENTER 714;Dummy
```

or

```
OUTPUT 714;"PROG:WAIT?"
ENTER 714;Dummy
```

Consider the following example where the user wishes to determine, from an external controller, if the IBASIC program running on the Test Set has finished executing. The example programs show how this might be accomplished with and without using the :WAIT? query command.

ManualsPlus.com

Example BASIC program without using the :WAIT? query command

```
10 OUTPUT 714;"PROG:STAT RUN"
20 LOOP
30 OUTPUT 714;"PROG:STAT?"
40 ENTER 714;State$
50 EXIT IF State$="STOP" OR State$="PAUS"
60 END LOOP
70 DISP "IBASIC program not running."
80 END
```

Example BASIC program using the :WAIT? query command

```
10 OUTPUT 714;"PROG:STAT RUN"
20 OUTPUT 714;"PROG:WAIT?"
30  ENTER 714;Dummy !Program will hang here until IBASIC program
stops
40 DISP "IBASIC program not running."
50 END
```

Using the EXECute Command

The PROGram:EXECute command can be used to list, edit and control IBASIC programs in the Test Set from an external controller. This eliminates having to use the cursor control knob and provides a more efficient way of making small changes to programs. The full range of IBASIC program commands can be executed from an external controller using the PROGram:EXECute command.

The following operations are given as typical examples of using the PROGram:EXECute command.

NOTE: The program commands and syntax used to send data from the external controller to the Test Set will depend upon the programming language used in the external controller. The examples which follow represent the capabilities of Rocky Mountain BASIC programming language running on an HP® 9000/300 Series Controller.

NOTE: When a PROGram Subsystem command is sent to the Test Set through GPIB from an external controller the Test Set is put into REMOTE mode. The Test Set must be put in LOCAL mode to use the front panel keys or to use the serial ports to input data into the IBASIC Command line.

ManualsPlus.com

Entering a new IBASIC program line

IBASIC program lines can be entered directly into the Test Set's RAM memory, one line at a time, from an external controller using the PROGram:EXECute command as follows:

PROG:EXEC '<new program line number/program line>'

where <new program line number/program line> represents a valid IBASIC program line.

For example, to enter the following new program line into the Test Set,

20 A=3.14

execute the following command from the external controller:

```
OUTPUT 714;"PROG:EXEC '20 A=3.14'"
```

Quoted strings, such as those used in PRINT commands, must use double quotes. For example,

```
OUTPUT 714;"PROG:EXEC '30 PRINT ""TEST""'"
```

Editing an existing IBASIC program line

Existing IBASIC program lines which are resident in the Test Set's RAM memory can be edited, one line at a time, from an external controller using the PROGram:EXECute command as follows:

```
PROG:EXEC '<existing program line number/modified program line>'
```

where <existing program line number/modified program line> represents an existing IBASIC program line.

For example, to edit the following existing program line in the Test Set.

```
30 OUTPUT 814;"AFAN:DEMP:GAIN 20 dB"
to
30 OUTPUT 814;"AFAN:DEMP:GAIN 10 dB"
```

execute the following command from the external controller:

```
OUTPUT 714;"PROG:EXEC '30 OUTPUT 814;""AFAN:DEMP:GAIN 10 dB""'"
```

Quoted strings, such as those used in OUTPUT commands, must use double quotes.

ManualsPlus.com

Listing A Program

Execute the following command on the external controller to list an IBASIC program which is resident in the Test Set to the currently specified IBASIC Controller LIST device.

```
OUTPUT 714;"PROG:EXEC 'LIST'"
```

Downloading An IBASIC Program Into the Test Set

The following procedure uses the PROGram Subsystem commands to transfer an IBASIC program, which is resident in the memory of the external controller, from the external controller to the Test Set. This procedure assumes the Test Set's GPIB address is set to 14. The example also assumes the external controller is an HP® 9000 Series 300 Controller.

1. Access the Test Set's TESTS (IBASIC Controller) screen.
2. Enter a program into the external controller. Use the sample program below if no program is available. When run, the sample program clears the Test Set's IBASIC Controller display area, and prints a message indicating that the download procedure worked.

```
10  !THIS IS A SAMPLE PROGRAM
20 CLEAR SCREEN
30 PRINT "DOWNLOADING COMPLETED"
40 END
```

3. Execute the following commands on the external controller:

```
OUTPUT 714;"PROG:DEL:ALL"
OUTPUT 714;"PROG:DEF #0"
LIST #714
OUTPUT 714;" "END
```

4. To verify that the program was downloaded, execute the following commands from the external controller:

   ```
   OUTPUT 714;"PROG:EXEC 'LIST'"
   ```

   The program should be listed on the Test Set's TESTS (IBASIC Controller) screen.
5. Run the program on the Test Set by first selecting the LOCAL key on the front panel of the Test Set and then selecting the **Run** key on the Test Set's TESTS (IBASIC Controller) screen.

ManualsPlus.com

Uploading a Program From the Test Set

The following BASIC program copies an IBASIC program from the Test Set's IBASIC Controller RAM to the external controller and then stores it to a file on the external controller's currently assigned mass storage device.

When the upload program is entered and run on the external controller, the operator is prompted for the name of the file to store the IBASIC program in. As the upload program is running, the total number of characters in the program, and the number of characters transferred, are displayed.

```
10 !Upload an IBASIC program in Test Set to an external controller.
20 DIM Prog_line$[200] !Holds longest program line in Test Set
30 DIM File_name$[10] !Holds the name of file to store IBASIC program
40 Addr=714 !Test Set GPIB address
50 LINPUT "Enter name of file to store IBASIC program in:",File_name$
60 OUTPUT Addr;"PROG:DEF?"
70 ENTER Addr USING "X,D,#";Count_length !Get length of count field
80 !Get number of characters in program, includes CR/LF on each line
90 ENTER Addr USING VAL$(Count_length)&"D,#";Chars_total
100 !Create ASCII file to hold program, add 5 records for buffer
110 CREATE ASCII File_name$,(Chars_total/256)+5
120 ASSIGN @File TO File_name$
130 LOOP
140    ENTER Addr;Prog_line$ !Read in one program line
150    OUTPUT @File;Prog_line$ !Store in file
160    Chars_xferd=Chars_xferd+LEN(Prog_line$)+2 !CR/LF not read
170    DISP Chars_xferd;"of";Chars_total;"characters transferred."
180 EXIT IF Chars_xferd>=Chars_total
190 END LOOP
200 ENTER Addr;Msg_terminator$ !Terminate the block data transfer
210 ASSIGN @File TO * !Close the file
220 END
```

ManualsPlus.com

Saving an IBASIC Program To A Memory Card

The following procedure can be used to save an IBASIC program from the IBASIC Controller's RAM memory to a memory card inserted into the front panel of the Test Set.

1. Press LOCAL, SHIFT, CANCEL on the Test Set to perform an IBASIC reset.
2. If the memory card has not been initialized, insert it into the Test Set and execute the following command on the external controller:

   ```
   OUTPUT 714;"PROG:EXEC 'INITIALIZE""DOS:INTERNAL,4""'"
   ```

3. Insert the initialized memory card into the Test Set.
4. Define the memory card as the Mass Storage device by executing the following command on the external controller:

   ```
   OUTPUT 714;"PROG:EXEC 'MSI "":INTERNAL,4""'"
   ```

5. Save the program to the memory card by executing the following command on the external controller:

   ```
   OUTPUT 714;"PROG:EXEC 'SAVE ""<filename>""'"
   ```

ManualsPlus.com

The TESTS Subsystem

The Test Set makes available to the user an automated user-interface which has been specifically designed for radio test. One of the primary problems associated with automated radio testing is the need to rapidly configure the software with the information needed to test a specific type of radio. Information such as, test frequencies/channels, test specifications, test parameters, test conditions and pass/fail limits. Most often the test(s) and test procedure(s) used to test a class of radio (AM, FM, AMPS, TACS, TDMA, CDMA, etc.) are defined by an industry standard and are used to test all radio types within that class. However, for a specific radio type, the test(s) may remain the same but the information needed to test the radio changes. For example, a portable hand-held may have different transmit power levels than a mobile - the RF power test is the same but the power levels, supply voltages, pass/fail limits etc. can be different.

There are two approaches which can be used to provide the software with the information needed to test a radio: a) hardcode the information directly into the software, or b) store the information outside the program code itself and make it available to the software as needed. Hardcoding the information into the software has several serious drawbacks: changing the information is difficult and the software becomes specific to that radio type. Storing the information outside the program code and making it available to the software as needed overcomes both of these problems, that is - the information is easy to change and the software is not specific to a particular type of radio.

The Test Set’s automated user-interface was designed using this approach. Agilent Technologies has developed software specifically designed to run on the Test Set. The Agilent 11807 Radio Test Software provides the user with a library of industry standard tests. All radio specific information has been removed from the software. The information needed to test a specific type of radio is available to the user through the TESTS Subsystem. To generate, change and maintain this radio specific information the TESTS Subsystem provides menu driven input screens to define specifications, parameters, test sequencing and system configuration for a particular radio type.

ManualsPlus.com

Writing Programs For the TESTS Subsystem

The Agilent 83224A IBASIC Developer's Tool Kit for Windows is required for developing programs which use the Tests Subsystem. Contact your local Agilent Technologies sales representative or sales office for ordering and pricing information.

TESTS Subsystem File Descriptions

Three types of files are used in the TESTS Subsystem to store different types of information.

Code Files

The first aspect of an automated definition is the code itself. This is just a standard IBASIC Code file that can reside either on the Memory card, on an external disk drive connected to the GPIB port of the Test Set, or in an internal RAM disk. The name of this file is preceded by a .PGM file extension in the Test Set. This tells the TESTS Subsystem that this particular file contains program code.

Library Files

A Library indicates all of the available test subroutines in the code, the set of all parameters that might be entered using the user-interface screens, and all specifications that might be used by the subroutines in the code to decide if a test point passes or fails.

Only one Library is defined for each Code file. The name of this file is preceded by a .LIB file extension in the Test Set, telling the TESTS system that this is a Library file. Also, both the Library and Code file should have the same base name to indicate the relationship between them.

A Library is required to use the user-interface screen functions of the TESTS Subsystem. If the program is simple enough that there is no need for user-input, or if all the user-input is simple enough to be accomplished with INPUT statements, a [NO LIB] option is available.

ManualsPlus.com

Procedure Files

A Procedure allows the user to define which of the test subroutines, parameters, and specifications defined in the Library will be used to test a specific Radio. There may be many Procedures defined that use the same IBASIC Code and Library, each using a different subset of the choices available in the Library. These files are preceded with a .PRC file extent in the Test Set, but are *not* required to have the same base name as either the Library or the Code. The name of the corresponding Library (if any) is stored in each Procedure file.

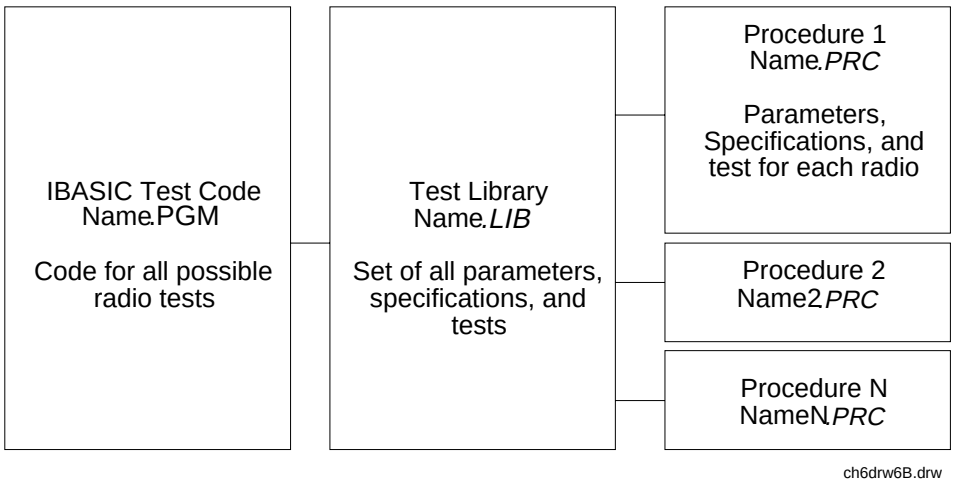

Figure 29 **TESTS Subsystem File Relationship**

ManualsPlus.com

TESTS Subsystem Screens

The TESTS Subsystem uses several screens to create, select, and copy files, and to run tests.

The Main TESTS Subsystem Screen

Refer to **Figure 30 on page 459**.

The TESTS (Main Menu) screen is accessed by pressing the front panel TESTS key. Test procedures are selected and run from this screen. Additionally, access to all other TESTS Subsystem screens is accomplished from this screen.

The **`Select Procedure Location:`** field is used to select the mass storage location for the procedure to be loaded. The **`Select Procedure Filename:`** field is used to select the name of the procedure to be loaded. The **`Description:`** field gives the user a brief description of the procedure currently selected in the **`Select Procedure Filename:`** field.

To view all the Procedures available on the mass storage location currently selected in the **`Select Procedure Location:`** field, position the cursor on the **`Select Procedure Filename:`** field and push the rotary knob. A menu will appear in the lower right corner of the screen, displaying all the procedure files which are available. This is not a listing of the full contents of the selected mass storage location, it is only a list of the procedures files that are stored on that media.

ManualsPlus.com

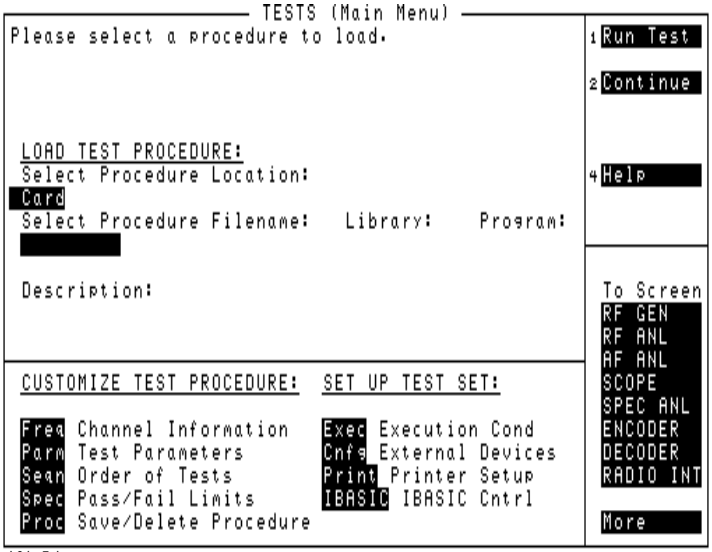

ch6drw7.drw

Figure 30 **The TESTS (Main Menu) Subsystem Screen**

TESTS Subsystem User-Interface Screens

The TESTS Subsystem allows the user to easily modify the test subroutines, parameters, specifications and configuration to correspond to the requirements of a specific radio. There are several user-interface screens provided to allow the user to make modifications.

ManualsPlus.com

To access any of these screens, position the cursor on the desired field and push the rotary knob.

- The *Order of Tests* screen lets the user select the desired test(s) from the full set of available tests in the loaded procedure file.
- The *Channel Information* screen defines the transmit and receive frequencies used for the selected tests.
- The *Pass/Fail Limits* screen defines the specifications used to generate pass/fail messages during testing.
- The *Test Parameters* screen is used to define instrument settings and characteristics to match those of the radio being tested (audio load impedance, audio power, power supply voltage).
- The *External Devices* screen identifies all connected GPIB equipped instruments and their GPIB addresses.
- The *Save/Delete Procedure* screen is used to save or delete Procedures.
- The *Printer Setup* screen is used to select the printer used for IBASIC PRINT commands and to configure the format of the printer page.
- The *Execution Cond* screen is used to configure the IBASIC program execution conditions.
- The *IBASIC Cntrl* screen is the IBASIC Controllers display screen.

Refer to the TESTS screen descriptions in the *Test Set User's Guide* for information concerning how the different TESTS Subsystem screens are used.

The use of the *IBASIC Controller* screen is described in the beginning of this chapter.

ManualsPlus.com

8

Programming the Call Processing Subsystem

This chapter presents information on how to control the Test Set's Call Processing Subsystem using the Call Processing Subsystem's remote user interface. For information on how to control the Call Processing Subsystem manually, refer to Chapter 6, Call Processing Subsystem, in the Test Set's *User's Guide*. It is highly recommended that the programmer be familiar with using the Call Processing Subsystem manually before reading this chapter.

ManualsPlus.com

Description of the Call Processing Subsystem's Remote User Interface

The Call Processing Subsystem's Remote User Interface consists of the following items:

- a set of programming commands which access all available fields on the six Call Processing Subsystem screens
- a status register group whose condition register reflects the current state of the Call Processing Subsystem annunciator state indicators
- a set of error messages, available through HP-IB, which provide information about error conditions encountered while in the Call Processing Subsystem

The programming commands provide the capability to generate control programs which can establish a cellular link between the Test Set and a cellular phone (mobile station). The status register group and the error messages provide the control program with the information necessary to make program flow decisions.

Once a link is established the control program can exercise the call processing functionality of the mobile station, such as:

- the decoding of orders from the Base Station, such as; orders to retune the transceiver to a new frequency, to alert the mobile station user to an incoming call, to adjust the transceiver output power level, or to release the mobile station upon completion of a call.
- the encoding of signaling information for transmission to the base station, such as; dialed digits for call origination, disconnect signal at the completion of a call, or mobile identification number.
- the authentication signaling associated with AMPS (IS-54) call processing such as shared secret data update, unique challenge, origination with authentication and page with authentication.

In addition to the mobile station's call processing functions, the control program can utilize the RF and audio instruments in the Test Set to characterize the overall performance of the mobile station while on an active voice channel by making such measurements as; receiver sensitivity, FM Hum & Noise, transmitter carrier power, carrier frequency accuracy, or SAT tone deviation.

The Call Processing Subsystem decodes various reverse control channel and reverse voice channel signaling messages. The remote user interface provides commands which allow the control program access to the contents of the decoded messages.

ManualsPlus.com

For forward control channel and forward voice channel signaling messages, the Call Processing Subsystem provides the option of sending messages whose contents are built using the rules and regulations specified in the applicable industry standard, or the control program can define the message contents as desired. Having the capability to set the bit patterns of the signaling messages sent to the mobile station gives the control program the capability to test the robustness of the mobile station by introducing known errors into the signaling messages. Once an error has been introduced the control program can monitor the response of the mobile station.

Operational Overview

The Test Set simulates a cellular base station by using its hardware and firmware resources to initiate and maintain a link with a mobile station. Unlike a real base station, the Test Set has only one transceiver (its signal generator and RF/AF analyzer) and can support only one mobile station at a time. This means that the Test Set's transceiver can be configured as either a control channel or a voice channel, but not both simultaneously.

To establish a link with a mobile station the Test Set's transceiver is configured as a control channel. Once a link has been established and the user wishes to test the mobile station on a voice channel, the Test Set sends the appropriate information to the mobile station on the control channel and then automatically re-configures its transceiver to the voice channel assigned to the mobile station. Once the voice channel link is terminated, the Test Set automatically re-configures its transceiver back to being a control channel.

Handoffs are accomplished in a similar manner. When a handoff is initiated while on a voice channel, the Test Set sends the necessary information to the mobile station on the current voice channel. At the proper time, the Test Set automatically re-configures its transceiver to the new voice channel.

Figure 31 on page 464 illustrates the primary call processing functions available in the Call Processing Subsystem. Each box represents a call processing state and includes the measurement information available while in that state. Each box also includes the name of the annunciator on the call processing screen that will be lit while in that call processing state. Events which trigger transitions between the various states are shown on the diagram. Events which are initiated from the Test Set are shown in solid lines and events which are initiated from the mobile station are shown in dashed lines.

ManualsPlus.com

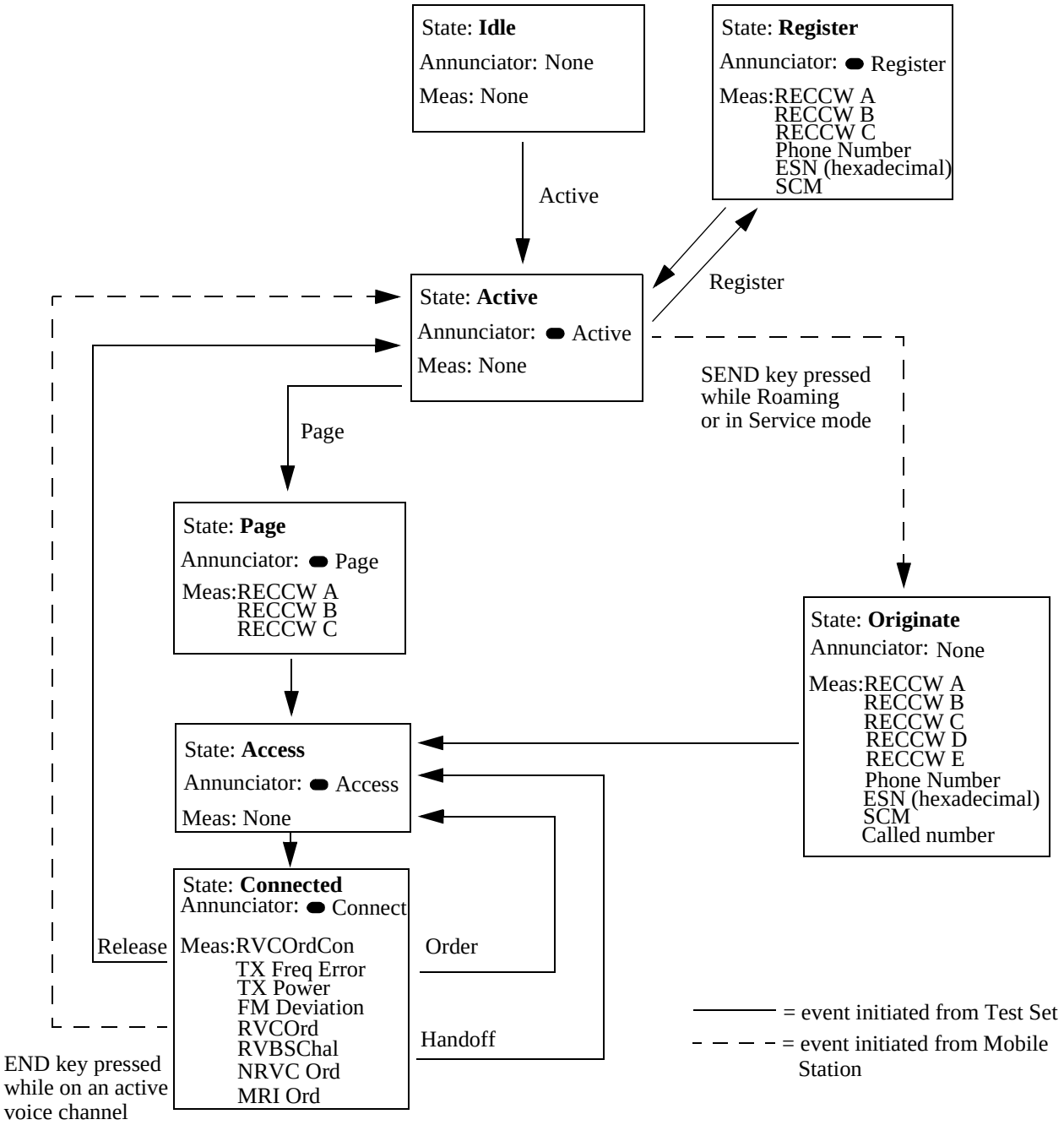

Figure 31 **Call Processing State Diagram**

ManualsPlus.com

Using the Call Processing Subsystem's Remote User Interface

In order to use the Call Processing Subsystem's Remote User Interface, a mobile station must be powered on, and connected to the Test Set.

Connecting a Mobile Station

Figure 32 on page 466 shows a typical example of how to connect a mobile station to the Test Set. You may need a special fixture to access the mobile station's antenna, audio in, and audio out signals. These fixtures are available from the mobile station's manufacturer.

If any audio testing is to be done on the mobile station, the audio input (microphone input) to the mobile station and the audio output (speaker output) from the mobile station must be connected to the Test Set. If no audio testing is to be done only the antenna needs to be connected to the Test Set.

ManualsPlus.com

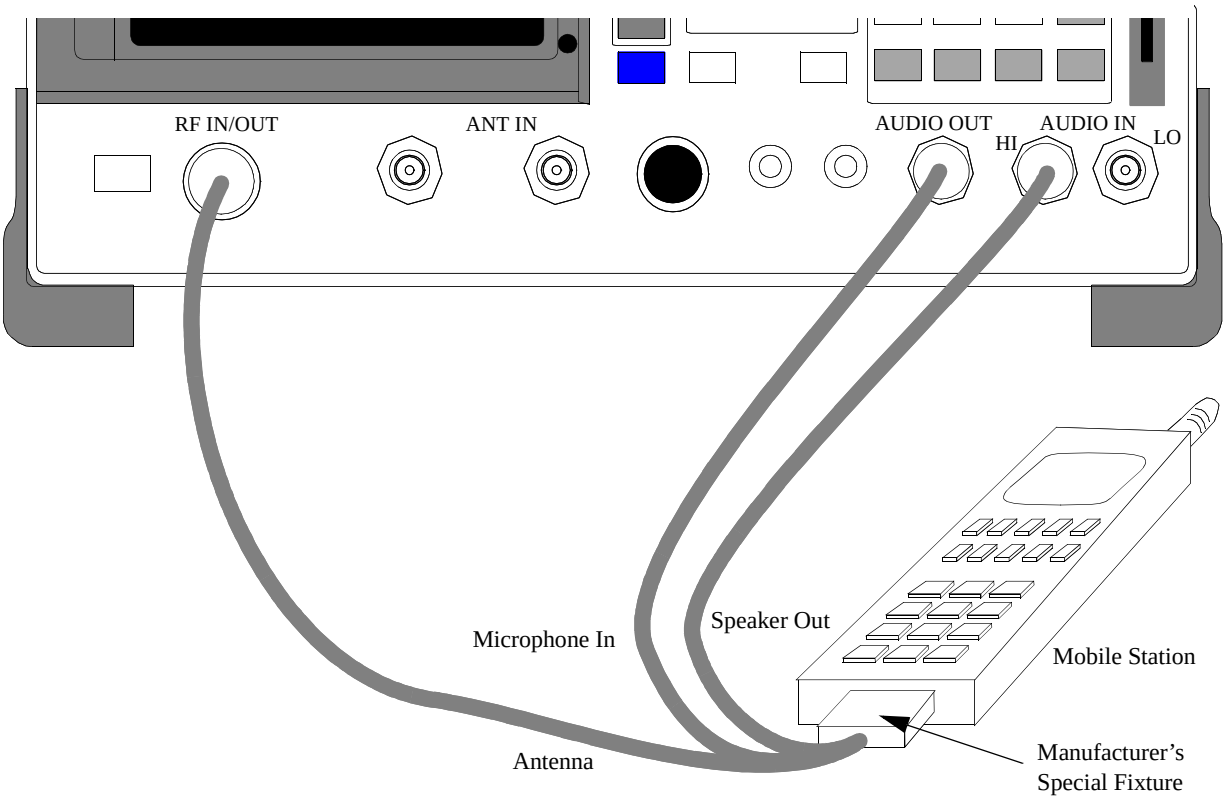

Figure 32 **Connecting a Mobile Station to the Test Set**

NOTE: Do not connect the antenna of the mobile station to the **`ANT IN`** port on the front panel of the Test Set as this will cause the overpower protection circuitry to trip when the mobile station is transmitting. Refer to the **`ANT IN`** field description in the *User's Guide* for further information.

Refer to the *User's Guide* for detailed information on connecting a mobile station to the Test Set.

ManualsPlus.com

Accessing the Call Processing Subsystem Screens

The Call Processing Subsystem screens are accessed by selecting the **CALL CONTROL**, **CALL DATA**, **CALL BIT**, **CALL CONFIGURE**, **ANALOG MEAS, or AUTHENTICATION** screens using the :DISPlay command. The mnemonics used to select a particular screen with the DISPlay command are shown in **Table 47**.

The query form of the :DISPlay command (that is, :DISPlay?) can be used to determine which screen is currently displayed.

Table 47 **Call Processing Screen Mnemonics**

Screen	Mnemonic
CALL CONTROL	ACNT
CALL DATA	CDAT
CALL BIT	CBIT
CALL CONFIGURE	CCNF
ANALOG MEAS	CME
AUTHENTICATION	AUTH
DIGITAL MEASUREMENTS	DME

Syntax

```
:DISPlay <screen mnemonic>
:DISPlay?
```

Example

```
OUTPUT 714;"DISP ACNT"
OUTPUT 714;"DISP?"
ENTER  714;Screen$
```

ManualsPlus.com

Command Syntax

The Call Processing Subsystem programming commands and command syntax are detailed in **"Call Processing" on page 122**. Refer to the "Programming the (screen name) Screen" sections in this chapter for detailed information on using the Call Processing Subsystem programming commands for each screen.

CAUTION: The *OPC, *OPC? and *WAI commands should not be used for determining if a Call Processing Subsystem state command has completed successfully. Call Processing Subsystem states do not complete, a state is either active or not active. Using the *OPC, *OPC? or *WAI commands with a Call Processing Subsystem state command results in a deadlock condition. Refer to the *OPC, *OPC? and *WAI commands in section **"Common Command Descriptions" on page 241** for descriptions of the deadlock conditions.

The *OPC, *OPC? or *WAI commands should not be used with any of the following Call Processing Subsystem commands: :ACTive, :REGister, :PAGE, :HANDoff, :RELease.

The Call Processing Subsystem Status Register Group should be used to control program flow. Refer to **"Using the Call Processing Status Register Group To Control Program Flow" on page 471** for further information.

ManualsPlus.com

Conditioning the Test Set for Call Processing

It is recommended the control program perform the following steps when first entering the Call Processing Subsystem (that is, the first time the **CALL CONTROL** screen is selected during a measurement session).

- Zero the RF Power meter to ensure accurate power meter measurements.

  There are two reasons for zeroing the RF power meter:

  a. When any Call Processing Subsystem screen is displayed (except the ANALOG MEAS screen) and the Call Processing Subsystem is in the **Connect** state, the host firmware constantly monitors the mobile station's transmitted carrier power. If the power falls below 0.0005 Watts the error message **RF Power Loss indicates loss of Voice Channel** will be displayed and the Test Set will terminate the call and return to the **Active** state. Zeroing the power meter cancels any inherent dc offsets that may be present within the power meter under zero power conditions. This ensures that the host firmware makes the correct decisions regarding the presence of the mobile stations's RF carrier.

  b. Zeroing the power meter establishes a 0.0000 W reference for measuring the mobile station's RF power at the RF IN/OUT port. This ensures the most accurate RF power measurements of the mobile stations's RF carrier at different power levels.

Example

```
OUTPUT 714;"RFG:AMPL:STATE OFF"
OUTPUT 714;"DISP RFAN;:RFAN:PME:ZERO"
OUTPUT 714;"RFG:AMPL:STATE ON"
```

NOTE: Ensure that no RF power is applied to the **RF IN/OUT** port when the power meter is being zeroed. Set the **RFGenerator** amplitude to **OFF** before zeroing the power meter and then set the **RFGenerator** amplitude to **ON** after zeroing the power meter.

- Couple the variable frequency notch filter to AFGen1.

  This step is only required if audio testing is to be done on the mobile station. This step couples the variable frequency notch filter to the output frequency of AFGen1 (audio frequency generator #1). The notch filter is used when making SINAD measurements. AFGen1 is used to generate the audio tone for the SINAD measurement. Coupling the notch filter to the audio source ensures the most accurate measurement.

  Commands:

```
OUTPUT 714;"DISP CONF;:CONF:NOTC 'AFGEN1'"
```

ManualsPlus.com

Call Processing Subsystem HP-IB Error Messages

The Call Processing Subsystem HP-IB error messages are detailed in **"Error -1300" on page 654** through **"Error -1317" on page 657**.

Reading A Call Processing Subsystem HP-IB Error Messages

If an error occurs while in the Call Processing Subsystem, an appropriate error message will be placed in the Error Message Queue. The control program can read the Error Message Queue to retrieve the error message. See **"Error Message Queue Group" on page 300** for detailed information on the Error Message Queue.

If an error occurred while attempting to decode data messages received from the mobile station on the reverse control channel or reverse voice channel, the raw data message bits are displayed in hexadecimal format in the upper right hand portion of the **CALL CONTROL** screen.

Figure 33 on page 470 shows the layout of the **CALL CONTROL** screen when a decoding error has occurred. The raw data bits can be read by the control program. Refer to the **Display field description, on page 482**, for information on how to read data in the upper right hand portion of the **CALL CONTROL** screen.

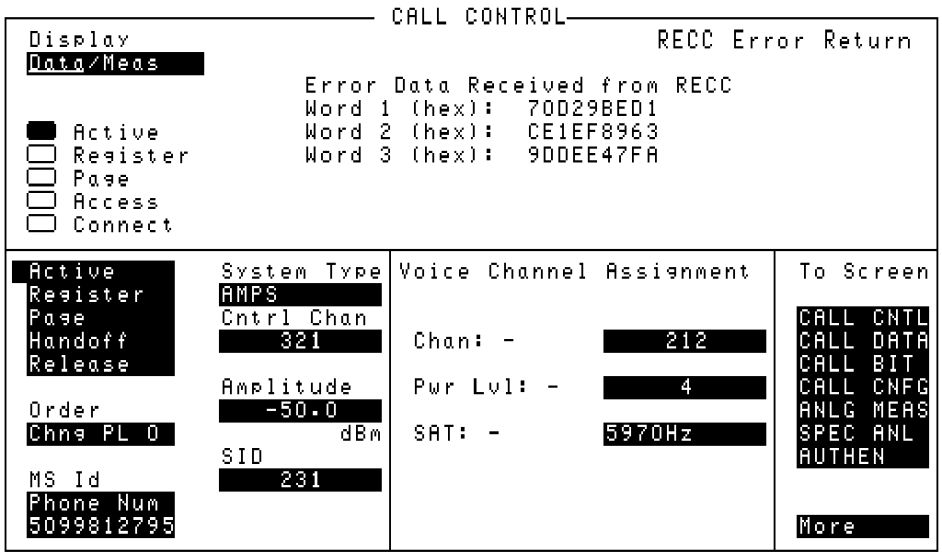

Figure 33 **CALL CONTROL Screen with Decoding Error Message Display**

ManualsPlus.com

Call Processing Status Register Group

See **"Call Processing Status Register Group" on page 307** for a detailed description of the Call Processing Subsystem Status Register Group.

See "Status Reporting Structure Overview" on page 275 for detailed information on status register groups and status reporting.

Using the Call Processing Status Register Group To Control Program Flow

The Call Processing Subsystem uses annunciators to indicate its current state. That is, if the Call Processing Subsystem is in the connected state, the **`Connect`** annunciator will be lit.

Bits 0 through 5 of the Condition register in the Call Processing Status Register Group mirror the condition of the annunciators. That is, if the **`Connect`** annunciator is lit, bit 5 of the Condition register will be TRUE, logic 1, and all other bits will be FALSE, logic 0.

Under most circumstances a control program will need some means of determining the state of an interaction between the control program, the Call Processing Subsystem and the mobile station.

For example, if the control program wishes to register a mobile station, the control program will have to send a command to put the Call Processing subsystem into the **`Active`** state, then, once in the **`Active`** state, send a registration message by putting the Call Processing Subsystem into the **`Register`** state and then determine when to read the mobile station's registration information in order to make a determination as to whether the mobile station registered correctly.

In the manual user interface, the annunciators supply this state information to the operator. In the remote user interface, the Call Processing Status Register Group supplies the state information to the control program.

The control program can access this information in one of two ways; by polling the status registers or by using the service request feature of the HP-IB. If properly implemented, either method can be used to obtain the information.

ManualsPlus.com

Advantages/Disadvantages of Polling

Polling has the advantage that the control program can react quicker to the change in state since the control program does not have to execute the code necessary to determine what condition caused the service request line to be asserted.

Polling has the disadvantage that, if improperly implemented, it can prevent the Call Processing Subsystem from properly interfacing with the mobile station.

The Test Set has a multitasking architecture wherein multiple processes execute on a priority driven and event driven basis. One of the highest priority processes is the process that services the HP-IB.

If a control program constantly polls the status registers to determine when a particular state is true, that state may take a very long time to go true or it may never go to the true state. This is because the process which would cause that state to go true will take a long time to complete or never complete because it is constantly being interrupted by the HP-IB service process.

This condition may cause problems with the timing of the message protocol between the Test Set and the mobile station. Therefore, care must be exercised when using the polling technique to allow enough time between polls for processes to execute within the Test Set.

Some computer systems and/or programming languages may not support the service request feature of the HP-IB and consequently polling would be the only technique available to the programmer. When using a polling technique be sure to include a delay in the polling loop.

Advantages/Disadvantages of Using Service Request

The service request feature of the HP-IB has the advantage that it allows the Call Processing Subsystem to execute at its maximum speed since processes within the subsystem are not being constantly interrupted by the need to service the HP-IB.

The service request feature of the HP-IB has the disadvantage that it takes more code to implement within the control program. The consequence of which is a slight reduction in the overall throughput of the control program since more code must be executed to accomplish the same task.

See "Setting Up and Enabling SRQ Interrupts" on page 330 for information on using the service request method.

The choice of which technique to use, polling or service request, will depend upon the needs of the particular application.

ManualsPlus.com

When To Query Data Messages Received From The Mobile Station

The Call Processing Subsystem makes available to the control program many data messages received from the mobile station. For example, if the Test Set sends a registration message to the mobile station, the registration information (MIN, ESN, SCM) received from the mobile station can be read by the control program.

The data messages are displayed on the CRT after the successful completion of the call processing function (registration, page, origination, etc.). When call processing functions complete, state changes occur within the Call Processing Subsystem. For example, when a registration completes the Call Processing Subsystem exits the register state (the **`Register`** annunciator is turned off) and returns to the active state (the **`Active`** annunciator is turned on).

The control program should only query the Test Set for the data messages after all the state transitions are complete. For example, the control program should not attempt to read the MIN, ESN or SCM until after the **`Register`** annunciator is turned off and the **`Active`** annunciator is turned on.

This is because the Test Set has a multitasking architecture wherein multiple processes execute on a priority driven and an event driven basis. Each process is given a timeslice on the CPU depending upon its priority, the priority of other processes and the nature of the events occurring within the Test Set.

Upon completion, processes within the Call Processing Subsystem pass data messages received from the mobile station to the Measurement Display Process which displays the information on the CRT during its next CPU timeslice. If the control program attempts to query the data fields before the Measurement Display Process has posted the information to the CRT, it is possible that the fields will be blank or contain data from a previous call processing function.

Waiting to read the data messages until after all state transitions have occurred ensures that the data from the most recent call processing function will have been posted. **Table 48, "Call Processing Subsystem State Transitions," on page 474** lists the possible state transitions within the Call Processing Subsystem.

ManualsPlus.com

Table 48 **Call Processing Subsystem State Transitions**

Starting State	Command	State Transitions	Final State
Idle	Active	Idle - Active	Active
Active	Register	Active - Register - Active	Active
Active	Page	Active -Page - Access - Connect	Connect
Connect	Handoff	Connect - Access - Connect	Connect
Connect	Release	Connect - Active	Active
Connect	Order	Connect - Access - Connect	Connect
Any state	Active	Current state - Active	Active

NOTE: The **`Access`** state may occur more than once during state transitions. For example: Connect - Access - Access - Connect. The number of times the **`Access`** state occurs is situation and system dependent.

If, for some specific application need, it is necessary to query the data messages before all state transitions have occurred, the control program may have to wait some finite amount of time before requesting the data or request the data multiple time (checking for the presence of data each time) or some combination of the two.

Call Processing Subsystem state changes can be monitored by the control program through the Call Processing Status Register Group. **See "Call Processing Status Register Group" on page 471** for further information.

ManualsPlus.com

Programming the CALL CONTROL Screen

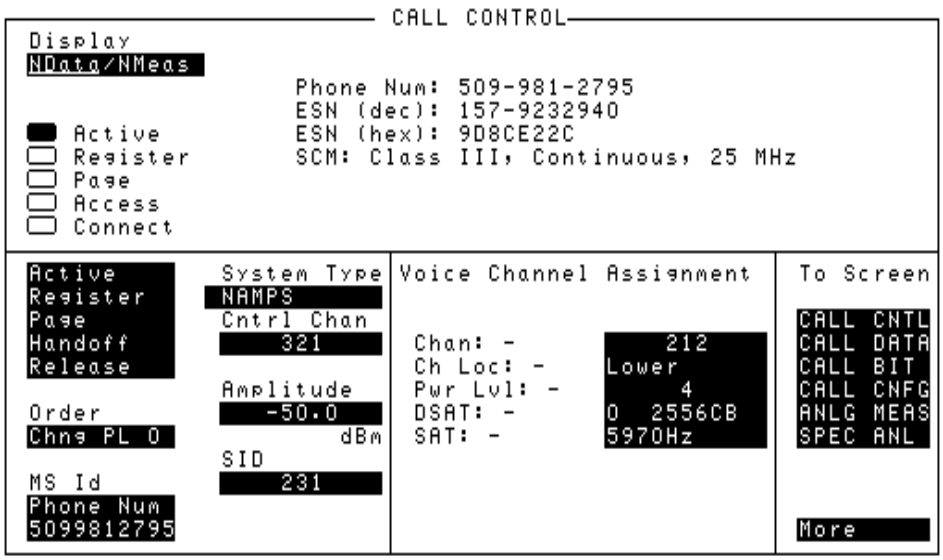

Figure 34 **The CALL CONTROL Screen**

The **CALL CONTROL** screen is the primary Call Processing Subsystem screen. It contains the most often used Test Set configuration fields and the command fields used to initiate call processing functions.

[] Access

When lit, the **Access** annunciator indicates that the Test Set is signaling the mobile station with command information on the forward voice channel. This is a transitory state.

The **Access** annunciator is not programmable.

The state of the **Access** annunciator is reflected in the Call Processing Status Register Group Condition Register bit 4. See “Status Reporting” in the User’s Guide for further information.

The Test Set’s speaker is turned off when in the Access state. This is done to eliminate any possible audio feedback which may occur if the mobile station’s microphone is open.

ManualsPlus.com

Active

This field is used to turn on the forward control channel of the Test Set or to force a return to the **`Active`** state from any other state (Register, Page, Access, Connect).

If the forward control channel of the Test Set is already active, sending the :ACTive command will deactivate and then reactivate the control channel.

The :ACTive command is used to control this field.

There is no query form of the :ACTive command.

Syntax

```
:ACTive
```

Example

```
OUTPUT 714;"CALLP:AMPS:ACT"
```

[] Active

When lit, the **`Active`** annunciator indicates that the control channel of the Test Set is turned on.

If this annunciator is lit, the Base Station is transmitting system parameter overhead messages on the assigned control channel. If the annunciator is not lit the base station is not active (note that the Test Set may still be outputting a modulated RF carrier but the Test Set's firmware is not active and no communication can occur between a mobile station and the Test Set).

The **`Active`** annunciator is not programmable.

The state of the **`Active`** annunciator is reflected in the Call Processing Status Register Group Condition Register bit 0. See "Status Reporting" in the User's Guide for further information.

ManualsPlus.com

AF Freq

The **AF Freq** field is displayed only when the **Display** field is set to **Meas**.

This field displays the audio frequency of the demodulated FM signal being transmitted by the mobile station. Four dashes (----) indicate that no audio frequency is present to measure. A numeric value would only be displayed when the Test Set's **Connected** annunciator is lit.

Refer to the **Display field description, on page 482**, for information on how to read measurement results from this field.

Amplitude

This field is used to set the output power of the Test Set's transmitter (that is, the output power of the Test Set's RF Generator).

The :AMPLitude command is used to control this field.

Refer to the "Real Number Setting Syntax" section of the for detailed information on the various parameters which can be used with the :AMPLitude command.

To query the current setting of the amplitude field use the :AMPLitude? command.

Syntax

```
:AMPLitude <real number> <units>
:AMPlitude?
```

Example

```
OUTPUT 714;"CALLP:AMPS:AMPL -50 DBM"
OUTPUT 714;"CALLP:AMPS:AMPL?"
ENTER 714;Ampl_val$
```

Called Number:

This information string displays the called phone number, in decimal form, received from the mobile station on the reverse control channel when the mobile station originates a call. The **Called Number:** field is only displayed when the **Display** field is set to **Data** and a reverse control channel message has been decoded when the mobile originates a call.

Refer to the **Display field description, on page 482**, for information on how to read data displayed in the upper right hand portion of the **CALL CONTROL** screen.

ManualsPlus.com

CC Order

The CC Order field is only visible when authentication is set to **ON** on the AUTHENTICATION screen and the Test Set is in the Active state.

This field is used to send an order on the forward overhead control channel to the mobile station when authentication is turned on. There are two orders available:

- The SSD Update ensures that the data contained in the mobile station and the base station is identical. At the completion of the SSD Update process the mobile station and the Test Set will contain identical copies of shared secret data.
- The Unique Challenge order challenges the mobile station's shared secret data through a series of algorithm data output comparisons. A successful challenge confirms the validity of a mobile station's shared secret data.

The :CCORder command is used to send an order type mobile station control message to the mobile station. The **Access** annunciator will light momentarily while the Test Set is sending the mobile station control message.

The query form of the command (that is, :CCORder?) can be used to determine the last order sent to the mobile station using the :CCORder command.

Syntax

```
:CCORder <'><SSD Upd/Uniq Ch><'>
:CCORder?
```

Example

```
OUTPUT 714;"CALLP:AMPS:AUTH:CCOR 'SSD Upd'"
OUTPUT 714;"CALLP:AMPS:AUTH:CCOR?"
ENTER 714;Last_ord_sent$
```

ManualsPlus.com

Chan:

The **Chan:** is divided into two fields:

- The left-hand field displays the voice channel number assignment being used by the Test Set and the mobile station.

  A numeric value is only displayed when the Test Set's **Connected** annunciator is lit (connected state). A "-" is displayed if a mobile station is not actively connected on a voice channel.

  This is a read only field.

  The :AVCNumber? query command is used to query the contents of the left-hand field.

  There is no command form of the :AVCNumber? query.

Syntax

```
:AVCNumber?
```

Example

```
OUTPUT 714;"CALLP:AMPS:AVCN?"
ENTER 714;Active_vc_number$
```

- The right-hand field (highlighted field) is used to set the voice channel number which will be assigned to the mobile station by the Test Set as either an initial voice channel assignment or as a handoff voice channel assignment.

  The :VCHannel command is used to control the right-hand subfield.

  The query form of the command (that is, :VCHannle?) can be used to determine the current voice channel setting.

Syntax

```
:VCHannel <real number>
:VCHannel?
```

Example

```
OUTPUT 714;"CALLP:AMPS:VCH 215"
OUTPUT 714;"CALLP:AMPS:VCH?"
ENTER 714;Vch_number$
```

ManualsPlus.com

Ch Loc:

The **`Ch Loc:`** field (NAMPS system type only) sets the narrow analog channel location which will be assigned to the mobile station by the Test Set as either an initial voice channel location or as a handoff channel location assignment.

The choices are:

- Lower - 10 kHz below standard wide analog channel
- Middle - centered at the wide analog channel
- Upper - 10 kHz above the standard wide analog channel
- Wide - standard 25 kHz AMPS channel width

The :CEXT:SETT command is used to set the new channel location.

The query form of the command (that is, :CEXT:SETT?), can be used to determine the current setting of the Ch Loc right-hand field and CEXT:ACT? can be used to determine the actual setting of the **`Ch Loc:`** left-hand field.

Syntax

```
:CEXTension:ACT?
:CEXTension:SETTing <'><LOWER/MIDDLE/UPPER/WIDE><'>
:CEXTension:SETTing?
```

Example

```
OUTPUT 714;"CALLP:NAMPS:CEXT:ACT?"
OUTPUT 714;"CALLP:NAMPS:CEXT:SETT 'LOWER'"
OUTPUT 714;"CALLP:NAMPS:CEXT:SETT?"
ENTER 714;Last_ord_sent$
```

ManualsPlus.com

Cntl Channel

This field is used to set the control channel number used by the Test Set.

The :CCHannel command is used to control this field.

The **`Cntl Channel`** field is an immediate action field. That is, whenever the :CCHannel command is sent, the change is reflected immediately in the physical configuration of the Test Set (the control channel is immediately deactivated, reconfigured, and then reactivated to reflect the change) and causes an immediate change to the current state of the Call Processing Subsystem (the state is set to **`Active`**).

NOTE: If the Test Set is in the **`Connect`** state and a change is made to the **`Cntl Channel`** field the **`Connect`** state will be lost.

The query form of the command (that is, :CCHannel?) can be used to determine the current control channel setting.

Syntax

```
:CCHannel <integer number>
:CCHannel?
```

Example

```
OUTPUT 714;"CALLP:AMPS:CCH 333"
OUTPUT 714;"CALLP:AMPS:CCH?"
ENTER 714;Control_chan
```

ManualsPlus.com

[] Connect

When lit, the **Connect** annunciator indicates that the mobile station is connected to the Test Set on a voice channel.

The **Connect** annunciator is not programmable.

The state of the **Connect** annunciator is reflected in the Call Processing Status Register Group Condition Register bit 5. See “Status Reporting” in the *Application Guide* for further information.

NOTE: When the **CALL CONTROL** screen is displayed and the Call Processing Subsystem is in the **Connect** state, the host firmware constantly monitors the mobile station’s transmitted carrier power. If the power falls below 0.0005Watts the Test Set will terminate the call and return to the **Active** state. The mobile station’s transmitted carrier power is monitored on all Call Processing Subsystem screens except the **ANALOG MEAS** screen.

Display

The top right-hand portion of the **CALL CONTROL** screen is used to display:

- Decoded data messages received from the mobile station on the reverse control channel or the reverse voice channel. If a decoding error occurs the raw data message bits received from the mobile station are displayed in hexadecimal format.
- Modulation quality measurements made on the mobile station’s RF carrier while on a voice channel.

The **Display** field is used to select the type of mobile station information to be displayed.

- The :MODE command is used to Control the **Display** field for AMPS, TACS, and JTACS system types
- The :NDMMode command is used to control the **Display** field for NAMPS system type.
- The :MODE? query is used to determine the current **Display** field setting for AMPS, TACS, and JTACS system types.
- The :NDMMode? query is used to determine the current **Display** field setting for NAMPS system type.

Syntax

```
:MODE <’><DATA/MEAS><’>
:MODE?
:NDMMode <’><NDATA/NMEAS><’>
:NDMMode?
```

ManualsPlus.com

Example

```
OUTPUT 714;"CALLP:AMPS:MODE 'DATA'"
OUTPUT 714;"CALLP:AMPS:MODE?"
ENTER 714;Screen$
OUTPUT 714;"CALLP:NAMP:NDMMode 'NDATA'"
OUTPUT 714;"CALLP:NAMP:NDMMode?"
ENTER 714;Screen$
```

Setting the Display field to Data

When the **Display** field is set to **Data** the top right-hand portion of the **CALL CONTROL** screen is used to display decoded data message(s) received from the mobile station on the reverse control channel or the reverse voice channel.

If the data message(s) received from the mobile station can be correctly decoded, the decoded message contents are displayed. **Figure 34 on page 475** shows an example of a correctly decoded reverse control channel data message being displayed in the top right-hand portion of the screen.

If the data message(s) cannot be correctly decoded, the raw data message bits are displayed in hexadecimal format. **Figure 33 on page 470** shows an example of the raw data message bits being displayed in hexadecimal format in the top right-hand portion of the screen when a decoding error has occurred

The messages are displayed in six non-labeled received data fields (that is, there is no field label on the display screen). The fields are named RCDD1 through RCDD6. The first and topmost field is RCDD1. The last and lowermost field is RCDD6.**Figure 35 on page 484** shows the position of the received data fields on the **CALL CONTROL** screen.

The control program queries these received data fields to obtain the displayed information strings.

ManualsPlus.com

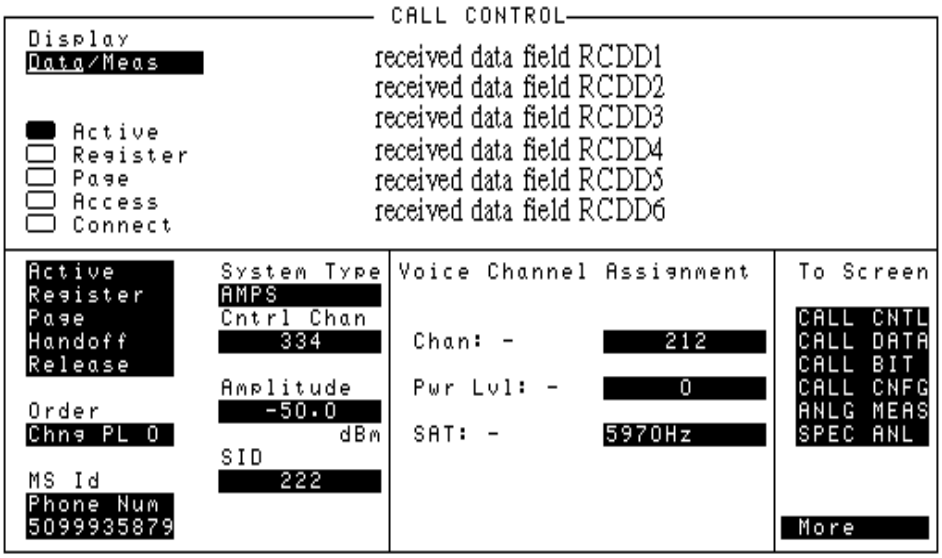

Figure 35 **CALL CONTROL Screen Received Data Fields**

Information Strings Available From The Received Data Fields

Table 49 lists the information strings available from the reverse control channel data messages received from the mobile station. The control program would query the appropriate received data field to obtain the displayed information string.

Table 49 Information Strings Available From Reverse Control Channel

Reverse Control Channel Message	Information Strings Displayed	Displayed in Received Data Field
Order Confirmation Message	Phone Number ESN(dec) ESN(hex) Station Class Mark Authentication messages	RCDD1 RCDD2 RCDD3 RCDD4 RCDD6

ManualsPlus.com

Table 49 Information Strings Available From Reverse Control Channel

Reverse Control Channel Message	Information Strings Displayed	Displayed in Received Data Field
Origination Message	Phone Number ESN(dec) ESN(hex) Station Class Mark Called Number Authentication messages	RCDD1 RCDD2 RCDD3 RCDD4 RCDD5 RCDD6
Order Message	Phone Number ESN(dec) ESN(hex) Station Class Mark Authentication Messages	RCDD1 RCDD2 RCDD3 RCDD4 RCDD6

Table 50 lists the information strings available from the reverse voice channel data messages received from the mobile station. The control program would query the appropriate received data field to obtain the displayed information string.

Table 50 Information Strings Available from Reverse Voice Channel

Reverse Voice Channel Message	Information Strings Displayed	Displayed in Received Data Field
Order Confirmation Message	Change Power Level Confirmation Authentication Messages Order Type	RCDD1 RCDD1 RCDD2

Table 51, "Information Strings Available When A Decoding Error Occurs," on page 486 lists the information strings available when a decoding error occurs. The control program would query the appropriate received data field to obtain the displayed information string.

ManualsPlus.com

Table 51 **Information Strings Available When A Decoding Error Occurs**

Information Strings Displayed	Displayed in Received Data Field	Length of Received Data Field
error data received from <channel type>		
word 1	RCDD1	30 characters max
word 2	RCDD2	40 characters max
word 3	RCDD3	30 characters max
word 4	RCDD4	40 characters max
word 5	RCDD5	40 characters max
word 6	RCDD6	40 characters max

Reading The Received Data Fields To read the decoded data messages received from the mobile station on the reverse control channel or reverse voice channel or the raw data message bits displayed when a decoding error occurs, the control program queries one, some, or all of the six received data fields. The information in each field is returned exactly as displayed on the CRT. The information is returned to the control program as a quoted string (“This is an example.”).

The received data fields are read only data fields.

The :RCDD1? through :RCDD6? query commands are used to read the contents of the six received data fields.

Syntax

```
:RCDD<1-6>?
```

Example

```
OUTPUT 714;"CALLP:AMPS:RCDD1?"
ENTER 714;Rcv_data$
```

ManualsPlus.com

Setting the Display Field to Meas

When the **Display** field is set to **Meas** the top right-hand portion of the **CALL CONTROL** screen is used to display modulation quality measurements made on the mobile station's RF carrier while on a voice channel.

- For system type AMPS, TACS, AND JTACS the following parameters are measured when the Test Set is in the connect state. See **Figure 36 on page 487**:
  - TX Freq Error
  - TX Power
  - FM Deviation
  - AF Frequency
- For system type NAMPS the following parameters are measured when the Test Set is in the connect state. See **Figure 37 on page 488**:
  - TX Freq Error
  - TX Power
  - FM Deviation
  - DSAT/DST

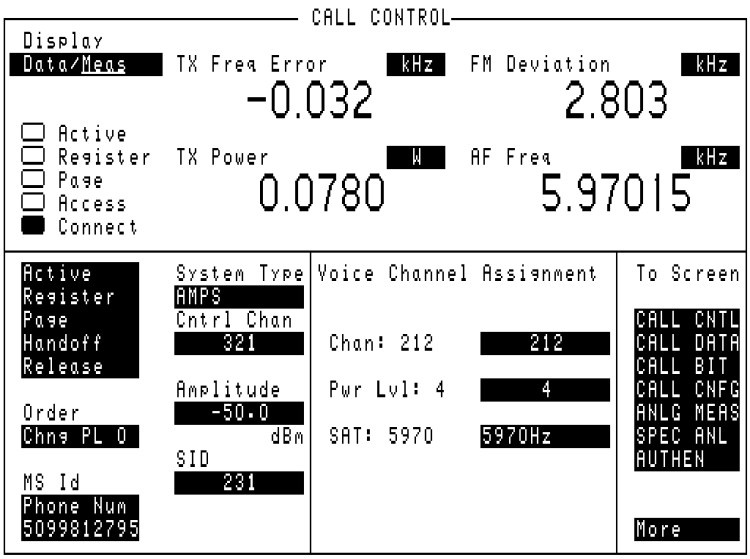

Figure 36 **CALL CONTROL Screen with Meas Selected**

ManualsPlus.com

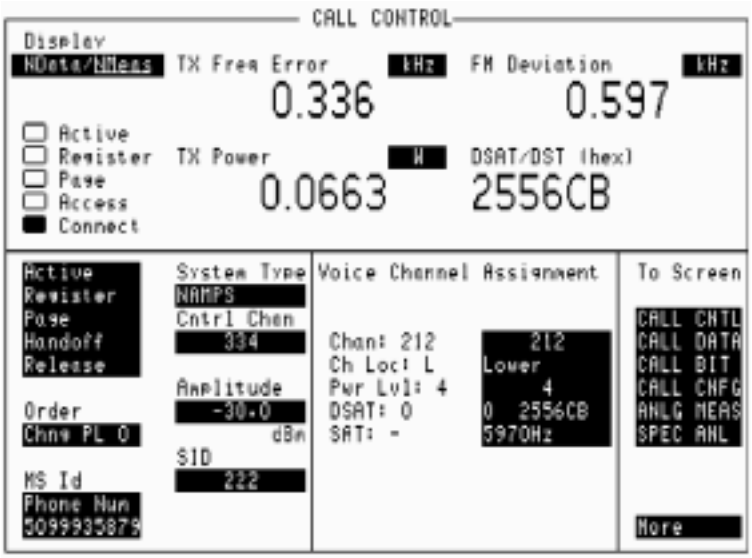

Figure 37 **CALL CONTROL Screen with NMeas Selected**

Reading The Modulation Quality Measurement Fields The **MEAS** selection brings some of the Test Set's Audio Analyzer fields and some of the Test Set's RF Analyzer fields onto the **CALL CONTROL** screen for the purpose of making modulation quality measurements on the mobile station's RF carrier while on a voice channel.

The measurement results contained in these fields are accessed using the :MEASure command. **See "Measure" on page 165** for detailed command syntax.

Syntax

See "Measure" on page 165

Example

```
OUTPUT 714;"MEAS:RFR:POW?"
ENTER 714;Tx_power
OUTPUT 714;"MEAS:RFR:FREQ:ERR?"
ENTER 714;Tx_freq_error
OUTPUT 714;"MEAS:AFR:FREQ?"
ENTER 714;Af_freq
OUTPUT 714;"MEAS:AFR:FM?"
ENTER 714;Fm_deviation
```

ManualsPlus.com

DSAT:–

The **DSAT:** field (**NAMPS** system type only), located in the voice channel assignment field is divided into two fields:

- The left-hand field displays the current DSAT control message being broadcast by the base station. A numeric value is only displayed when the **Ch Loc:** is set to Lower, Middle or Upper and a mobile station is actively connected on a voice channel (that is, the **Connect** annunciator is lit). A "-" is displayed if a mobile station is not actively connected on a voice channel or the **Ch Loc:** is set to Wide. When the **Ch Loc:** is set to Wide the **SAT** field displays the current SAT frequency being broadcast by the Test Set.

  The left-hand field is a read only field and is displayed only when the selected system type is NAMPS.

  The :DSAT:ACTual? query command is used to query the contents of the left-hand field.

  There is no command form of the query :DSAT:ACTual? .

Syntax

:DSAT:ACTual?

Example

```
OUTPUT 714;"CALLP:NAMP:DSAT:ACTual?"
ENTER 714;Active_dsat$
```

- The right-hand field (highlighted field) is used to set one of the 7 valid DSAT sequences to be used on the designated voice channel (the channel number entered into the **Chan:** right-hand field).

  The :DSAT command is used to control the right-hand field.

  The query form of the command (that is, :DSAT:SETTing?) can be used to determine the current Test Set DSAT setting.

Syntax

:DSAT:SETTing <'><0 2556CB/1 255B2B/2 256A9B/3 25AD4D/4 26AB2B/5 26B2AD/6 2969AB><'>

:DSAT:SETTing?

Example

```
OUTPUT 714;"CALLP:NAMP:DSAT '0 2556CB'"
OUTPUT 714;"CALLP:NAMP:DSAT:SETT?"
ENTER 714;DSat_sequence$
```

ManualsPlus.com

DSAT/DST (hex)

The **DSAT/DST** field is displayed only when the **System Type** field is set to **NAMPS** and the **Displa**y field is set to **NMeas**.

The DSAT/DST field displays the received **DSAT/DST** sequence from the mobile station on the reverse voice channel. The received sequence is displayed in hexadecimal and can be checked against the DSAT value displayed in the DSAT right-hand DSAT field. Four dashes (----) indicate no carrier is present to measure. A numeric value would only be displayed when the Test Set's **Connected** annunciator is lit (connected state).

The :DSAT:MEASurement? query command is used to query the contents of the left-hand subfield.

There is no command form of the :MEASurement? query.

Syntax

```
:DSAT:MEASurement?
```

Example

```
OUTPUT 714;"CALLP:NAMP:DSAT:MEASurement?"
ENTER 714;MEASured_dsat$
```

ManualsPlus.com

ESN (dec):

This information string contains the electronic serial number (ESN), in decimal form, received from the mobile station on the reverse control channel in response to a forward control channel message.

The **ESN (dec):** field is only displayed when the **Display** field is set to **Data** and a reverse control channel message containing this information has been decoded.

Refer to the **Display field description, on page 482**, for information on how to read data displayed in the upper right hand portion of the **CALL CONTROL** screen.

ESN (hex):

This information string displays the electronic serial number (ESN), in hexadecimal form, received from the mobile station on the reverse control channel in response to a forward control channel message.

The **ESN (hex):** field is only displayed when the **Display** field is set to **Data** and a reverse control channel message containing this information has been decoded.

Refer to the **Display field description, on page 482**, for information on how to read data displayed in the upper right hand portion of the **CALL CONTROL** screen.

ManualsPlus.com

FM Deviation

This field displays the measured FM deviation of the RF carrier being transmitted by the mobile station on the reverse voice channel. Four dashes (----) indicate that no carrier is present to measure.

A numeric value would only be displayed in the connected state (that is, the **Connected** annunciator is lit). The **FM Deviation** field is only displayed when the **Display** field is set to **Meas**.

Refer to the **Display field description, on page 482**, for information on how to read measurement results from this field.

NOTE: When the **CALL CONTROL** screen is displayed, the Test Set's instrumentation is configured for optimal performance of the signaling decoder. Two characteristics of the instrumentation which have a significant affect on the performance of the signaling decoder are: 1) audio frequency gain and 2) post detection filtering.

While the **CALL CONTROL** screen is displayed the audio frequency gain stages are fixed (that is, autoranging is tuned off). This is necessary to ensure that no signaling bursts are missed as a result of the audio gain stages autoranging in response to a burst of signaling data. Fixing the audio gain stages may result in a slight accuracy degradation for FM deviation measurements less than 7 kHz.

In addition, the post detection bandwidth is set at <20 Hz and >99 kHz in the Active, Register and Page states, and 300 Hz to 15 kHz when in the Connected state. This is done to ensure that no signaling tones are filtered off. This wide post detection bandwidth allows more noise to be introduced into the measurement process which affects the measured deviation.

Given these conditions it is recommended that FM deviation measurements requiring full Test Set FM deviation accuracy be made on the **ANALOG MEAS** screen or the **AF ANALYZER** screen. The audio frequency gains stages are set to autorange while on these screens and post detection filters can be selected to optimize deviation measurements.

ManualsPlus.com

Handoff

This field is used to initiate a handoff.

The voice channel number to hand the mobile station off to, the initial power level to use on the new voice channel and the SAT tone frequency to transpond on the new voice channel are specified using the **Chan:**, **Ch Loc:**, **Pwr Lvl:**, **DSAT:**, and **SAT:** fields under the **Voice Channel Assignment** section of the **CALL CONTROL** screen.

The :HANDoff command is used to control this field.

There is no query form of the :HANDoff command.

Syntax

```
:HANDoff
```

Example

```
OUTPUT 714;"CALLP:AMPS:HAND
```

MS Id

This field is used to enter the identification number of the mobile station. The **MS Id** field has two fields. The content of the lower field is automatically updated upon successful completion of a mobile station registration.

The upper field is a one-of-many selection field and is used to select the format for entering the identification number. The :NMODe command is used to set the upper field. Two formats are available: **Phone Num** for entering a 10 digit phone number or **MIN2 MIN1** for entering the mobile identification number.

The lower field is a numeric entry field and is used to enter the identification number in the format selected using the upper field.

There are two formats which can be used to enter the identification number in the lower field.

- The identification number can be entered as the 10 digit phone number in decimal (i.e. 5095551212). The :PNUMber command is used to enter the 10 digit phone number.
- The identification number can be entered as the mobile identification number (MIN) in hexadecimal (i.e. AAABBBBBB). The MIN number is entered as the 3 character MIN2 (AAA) followed by the 6 character MIN1 (BBBBBB). The :MINumber command is used to enter the MIN number.

ManualsPlus.com

The formats are coupled, that is, if the **Phone Num** format is selected and the 10 digit phone number is entered, the **MIN2 MIN1** information is automatically updated, and vice versa.

NOTE: The present values for the **MS Id** fields are:

- **Phone Num** = 1111111111
- **MIN2 MIN1** = 000000400

An all zero MIN number (000000000), which does not represent a valid phone number, will convert to the following phone number: 111111?111

The query form of the programming commands (that is, the ? form) can be used to interrogate the contents of each field.

Syntax

```
:NMODE <'><PHONE NUM/MIN2 MIN1><'>
:NMODE?
:PNUMber <'><10 character phone number><'>
:PNUMber?
:MINumber <'><3 character MIN2 + 6 character MIN1><'>
:MINumber?
```

Example

```
OUTPUT 714;"CALLP:AMPS:NMOD 'PHONE NUM'"
OUTPUT 714;"CALLP:AMPS:PNUM '5099906092'"
OUTPUT 714;"CALLP:AMPS:NMOD 'MIN'"
OUTPUT 714;"CALLP:AMPS:MIN '1F2DE5BD5'"
OUTPUT 714;"CALLP:AMPS:NMOD?"
ENTER 714;Number_mode$
```

ManualsPlus.com

Order

This field is used to send an order type mobile station control message on the forward voice channel to the mobile station. The orders available are:

- Change Power to Power Level 0 - 7
- Maintenance (put the mobile station in maintenance mode)
- Alert (alert the mobile station)
- MRI (mobile reported interference) request (**NAMPS** system type only)

The ORDER field is updated with two separate HP-IB commands depending on the selected system type. The commands are:

- :ORDER for system types AMPS, TACS, AND JTACS. This command is used to send an order type mobile station control message to the mobile station. The **Access** annunciator will light momentarily while the Test Set is sending the mobile station control message.

  A mobile station must be actively connected on a voice channel to the Test Set (that is, the **Connect** annunciator lit) before attempting to send an order to a mobile station.

  The query form of the command (that is, :ORDer?) can be used to determine the last order sent to the mobile station using the :ORDer command.

Syntax

```
:ORDer <'><order message><'>
:ORDer?
```

Example

```
OUTPUT 714;"CALLP:AMPS:ORD 'CHNG PL 0'"
OUTPUT 714;"CALLP:AMPS:ORD?"
ENTER 714;Last_ord_sent$
OUTPUT 714;"CALLP:ORD?"
```

ManualsPlus.com

- :NORDer for system types NAMPS. This command is used to send an order type mobile station control message to the mobile station. The **Access** annunciator will light momentarily while the Test Set is sending the mobile station control message

  The :NORDer command is used to send an order type mobile station control message to the mobile station. The **Access** annunciator will light momentarily while the Test Set is sending the mobile station control message.

  A mobile station must be actively connected on a voice channel to the Test Set (that is, the **Connect** annunciator lit) before attempting to send an order to a mobile station.

  The query form of the command (that is, :NORDer?) can be used to determine the last order sent to the mobile station using the :NORDer command.

Syntax

:NORDer <"><NAMPS order message><">
:NORDer?

Example

```
OUTPUT 714;"CALLP:NAMPS:NORD "MRI""
OUTPUT 714;"CALLP:NAMPS:NORD "Chng PL0""
OUTPUT 714;"CALLP:NAMPS:NORD?"
ENTER 714;Last_ord_sent$
```

ManualsPlus.com

Page

This field is used to initiate a page to the mobile station connected to the Test Set.

The Test Set must be in the active state (that is, **`Active`** annunciator lit) and the **`MS Id`** information must be correct before attempting to page a mobile station.

The :PAGE command is used to control this field.

There is no query form of the :PAGE command.

Syntax

```
:PAGE
```

Example

```
OUTPUT 714;"CALLP:AMPS:PAGE"
```

[] Page

When lit, the **`Page`** annunciator indicates that the mobile station connected to the Test Set is currently being paged on the forward control channel.

The **`Page`** annunciator is not programmable.

The state of the **`Page`** annunciator is reflected in the Call Processing Status Register Group Condition Register bit 3. **See "Call Processing Status Register Group" on page 307** for further information.

ManualsPlus.com

Phone Num:

This field displays the phone number decoded from the MIN number received from the mobile station on the reverse control channel in response to a forward control channel message

The **`Phone Num:`** field is only displayed when the **`Display`** field is set to **`Data`** and a reverse control channel message containing this information has been decoded.

Refer to the **`Display` field description, on page 482**, for information on how to read data in the upper right hand portion of the **`CALL CONTROL`** screen.

CAUTION: Do not confuse the **`Phone Num:`** field, which is displayed in the upper right-hand portion of the **`CALL CONTROL`** screen, with the **`Phone Num`** selection of the **`MS Id`** field.

NOTE: An all zero MIN number (000000000), which does not represent a valid phone number, will convert to the following phone number: 111111?111.

ManualsPlus.com

Pwr Lvl:

The **Pwr Lvl:** field is divided into two fields:

- The left-hand field displays the mobile station's output power level assignment for the voice channel currently being used by the Test Set and the mobile station.

  A numeric value is only displayed when a mobile station is actively connected on a voice channel (that is, the **Connect** annunciator is lit). A "-" is displayed if a mobile station is not actively connected on a voice channel.

  This is a read only field.

  The :AVCPower? command is used to query the contents of the left-hand subfield.

  There is no command form of the :AVCPower? command.

Syntax

```
:AVCPower?
```

Example

```
OUTPUT 714;"CALLP:AMPS:AVCP?"
ENTER 714;Active_vc_pwr$
```

- The right-hand subfield (highlighted field) is used to enter the Voice Mobile Attenuation Code (VMAC). The VMAC determines the mobile station power level to be used on the designated voice channel (the channel number entered into the **Chan:** right-hand subfield).

  The :VMACode command is used to control the right-hand subfield.

  The query form of the command (that is, :VMACode?) can be used to determine the current VMAC setting.

Syntax

```
:VMACode?
:VMACode <integer number 0 to 7>
```

Example

```
OUTPUT 714;"CALLP:AMPS:VMAC 3"
OUTPUT 714;"CALLP:AMPS:VMAC?"
ENTER 714;Vmac_setting
```

ManualsPlus.com

Register

This field is used to initiate a registration of the mobile station connected to the Test Set.

The Test Set must be in the active state (that is, the **`Active`** annunciator lit) before attempting to register a mobile station.

The :REGister command is used to control this field.

There is no query form of the :REGister command.

Syntax

```
:REGister
```

Example

```
OUTPUT 714;"CALLP:AMPS:REG"
```

[] Register

When lit, the **`Register`** annunciator indicates that the mobile station connected to the Test Set is being commanded to register with the Test Set

The **`Register`** annunciator is not programmable.

The state of the **`Register`** annunciator is reflected in the Call Processing Status Register Group Condition Register bit 1. See “Status Reporting” in the *Application Guide* for further information.

ManualsPlus.com

Release

This field is used to terminate an active voice channel connection with the mobile station.

When the **`Release`** field is selected, a mobile station control message with a Release order is sent to the mobile station on the forward voice channel. A mobile station must be actively connected on a voice channel to the Test Set (that is, the **`Connect`** annunciator lit) before attempting to send a release order to the mobile station.

The :RELease command is used to control this field.

There is no query form of the :RELease command.

Syntax

```
:RELease
```

Example

```
OUTPUT 714;"CALLP:AMPS:REL"
```

ManualsPlus.com

SAT:

The **SAT:** field is divided into two fields:

- The left-hand field displays the current SAT tone frequency assignment for the current voice channel being used by the Test Set and the mobile station.

  The Sat field only displays a value when the system type is set to AMPS, TACS, JTACS or when NAMPS Ch Loc: is set to Wide. The Test Set must also be actively connected on a voice channel (that is, the **Connect** annunciator is lit). A "-" is displayed if a mobile station is not actively connected on a voice channel or the system type is NAMPS and Ch Loc: is set to Lower, Middle, or Upper.

  This is a read only field.

  The :AVCSat? query command is used to query the contents of the left-hand subfield.

  There is no command form of the :AVCSat? command.

Syntax

```
:AVCSat?
```

Example

```
OUTPUT 714;"CALLP:AMPS:AVCS?"
ENTER 714;Active_vc_sat$
```

- The right-hand field (highlighted field) is used to set the SAT Color Code (SCC) to be used on the designated voice channel (the channel number entered into the **Chan:** right-hand subfield).

  The :SATone command is used to control the right-hand subfield.

  The query form of the command (that is, :SATone?) can be used to determine the current SAT Color Code (SCC) setting.

Syntax

```
:SATone <'><5970HZ/6000HZ/6030HZ><'>
:SATone?
```

Example

```
OUTPUT 714;"CALLP:AMPS:SAT?"
OUTPUT 714;"CALLP:AMPS:SAT '5970HZ'"
ENTER 714;Sat_color_code$
```

ManualsPlus.com

SCM:

This field displays the decoded station class mark information received from the mobile station on the reverse control channel in response to a forward control channel message. The decoded SCM consists of: the mobile station power class (Class I, II, or III), the transmission type (continuous/discontinuous), and the transmission bandwidth (20 MHz or 25 MHz).

The **SCM:** field is only displayed when the **Display** field is set to **Data** and a reverse control channel message has been decoded.

Refer to the **Display field description, on page 482**, for information on how to read data in the upper right hand portion of the **CALL CONTROL** screen.

SID

This field is used to set the system identification number (SID) of the Test Set.

The :SIDentify command is used to control this field.

The **SID** field is an immediate action field. That is, whenever the :SIDentify command is sent, the change is reflected immediately in the appropriate signaling message(s) being sent on the forward control channel. No change occurs to the current state (i.e. Active, Register, Page, Access, Connect) of the Call Processing Subsystem.

The query form of the command (that is, :SIDentify?) can be used to determine the current system identification number (SID) setting.

Syntax

```
:SIDentify <integer number>
:SIDentify?
```

Example

```
OUTPUT 714;"CALLP:AMPS:SID 231"
OUTPUT 714;"CALLP:AMPS:SID?"
ENTER 714;Sid_number
```

ManualsPlus.com

System Type

This field is used to select the type of cellular system (AMPS, NAMPS, TACS, JTACS, DAMPS, DCCH) which will be simulated.

The :CSYStem command is used to control this field.

The **`System Type`** field is an immediate action field. That is, whenever the :CSYStem command is sent, the change is reflected immediately in the physical configuration of the Test Set (the control channel is immediately deactivated, reconfigured, and then reactivated to reflect the change) and causes an immediate change to the current state of the Call Processing Subsystem (the state is set to **`Active`**).

NOTE: If the Test Set is in the **`Connect`** state and a change is made to the **`System Type`** field the **`Connect`** state will be lost.

The query form of the command (that is, :CSYStem?) can be used to determine the type of cellular system currently being simulated.

Syntax

```
:CSYStem <'><AMPS/NAMPS/TACS/JTACS/DAMPS/DCCH><'>
:CSYStem?
```

Example

```
OUTPUT 714;"CALLP:AMPS:CSYS 'AMPS'"
OUTPUT 714;"CALLP:AMPS:CSYS?"
ENTER 714;System_type$
```

ManualsPlus.com

TX Freq Error

This field displays the frequency error (frequency error = assigned carrier frequency - measured carrier frequency) of the RF carrier being transmitted by the mobile station. Four dashes (----) indicate that no RF carrier is present to measure.

A numeric value would only be displayed in the connected state (that is, the **Connect** annunciator is lit). The **TX Freq Error** field is only displayed when the **Display** field is set to **Meas**.

Refer to the **Display field description, on page 482**, for information on how to read data in the upper right hand portion of the **CALL CONTROL** screen.

TX Power

This field displays the measured RF power of the RF carrier being transmitted by the mobile station.

A nonzero value would only be displayed in the connected state (that is, the **Connect** annunciator is lit). The **TX Power** field is only displayed when the **Display** field is set to **Meas**.

Refer to the **Display field description, on page 482**, for information on how to read data in the upper right hand portion of the **CALL CONTROL** screen.

ManualsPlus.com

VC Order

This field is used to send an order type mobile station control message on the forward voice channel to the Mobile Station with Authentication active. The **VC Order** field is only visible when authentication is activated and the mobile is assigned a voice channel.

The orders available are:

- Change Power to Power Level 0 - 7
- Maintenance (put the mobile station in maintenance mode)
- Alert (alert the mobile station)
- SSD Update (shared secret data update)
- Uniq Ch (unique challenge)

The :VCORDer command is used to send an order type mobile station control message to the mobile station. The **Access** annunciator will light momentarily while the Test Set is sending the mobile station control message.

A mobile station must be actively connected on a voice channel to the Test Set (that is, the **Connect** annunciator is lit) before attempting to send an voice channel order to a mobile station.

The query form of the command (that is, :VCORDer?) can be used to determine the last order sent to the mobile station using the :VCORDer command.

Syntax

```
:VCORDer <'><order message><'>
:VCORDer?
```

Example

```
OUTPUT 714;"CALLP:AMPS:VCORD 'CHNG PL 0'"
OUTPUT 714;"CALLP:AMPS:VCORD?"
ENTER 714;Last_ord_sent$
```

ManualsPlus.com

Programming the AUTHENTICATION Screen

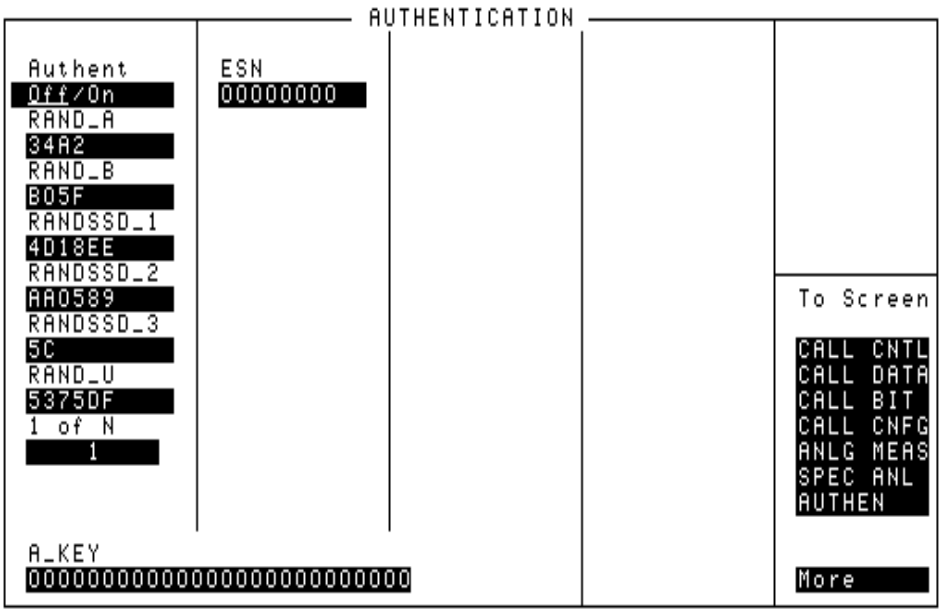

Figure 38 The Authentication Screen

The AUTHENTICATION screen allows the user to enter parameters for authentication into the test set. These parameters allow for synchronization of shared secret data between the Test Set and the mobile for use in testing call processing with authentication. This functionality is available only with AMPS (IS-54) call processing functions.

ManualsPlus.com

A_Key

Manually this field is used to enter the mobile station's A_key into the Test Set. The user must obtain a valid **A_Key** from the mobile station's manufacturer, service provider or must generate a valid A_key to test authentication procedures, otherwise the authentication process will fail.

The remote user interface provides two uses for the A_Key field. These include:

- Entering an A_KEY into the Test Set.
- Generating a new A_Key.

Entering an A_key Directly into the Test Set.

The :AKEY command is used to enter an A_key into the Test Set.

The query form of the command (that is, :AKEY?) can be used to determine the Test Set's current A_key value. The length of the returned value requires declaring the variable length at 26. This command does not return the mobile station's current A_key.

Syntax

```
:AKEY <'><26 CHARACTER A_key><'>
:AKEY?
```

Example

```
DIM Akey_set$[27]
OUTPUT 714;"CALLP:AMPS:AUTH:AKEY '12345678901234567890123456'"
OUTPUT 714;"CALLP:AMPS:AUTH:AKEY?"
ENTER 714;Akey_set$
```

ManualsPlus.com

Generating a New A_key.

The :Generate command is only available through the remote users interface. No field is displayed for this function on the test set.

The :GENerate command is used to generate a new A_key for use in the mobile station. This is an immediate action command. The resultant check sum value will be displayed on the AUTHENTICATION screen in the last six digits of the **A_key** field.

There in no query form of the GENerate command. Use the query form of **"A_Key" on page 508** to determine the value of the A_key which was generated.

Syntax

```
:GENerate
```

Example

```
OUTPUT 714;"CALLP:AMPS:AUTH:AKEY:GEN"
OUTPUT 714;"CALLP:AMPS:AUTH:AKEY?"
ENTER 714;Akey_val$
```

Authent

This field is used to activate the authentication process within the Test Set. With this field set to **On**, the Test Set issues system parameter overhead messages including **SPC WORD1**, **SPC WORD2**, **ACCESS**, **RandChalA**, and **RandChalB** to the mobile station.

The :ONOFF command instructs the Test Set to issue system parameter overhead messages with the AUTH bit set to one.

The query form of the command (that is, :ONOFF?) can be used to determine the current setting of the test set.

Syntax

```
:AUTHenticate:ONOFF <'><ON/OFF><'>
:AUTHenticate:ONOFF?
```

Example

```
OUTPUT 714;"CALLP:AMPS:AUTH:ONOFF 'ON'"
OUTPUT 714;"CALLP:AMPS:AUTH:ONOFF?"

ENTER 714;Auth_state$
```

ManualsPlus.com

ESN

This field is used to enter the electronic serial number (ESN) of the mobile station into the Test Set. There are two methods which can be used to enter the **ESN**. The serial number can be captured by the Test Set through a registration order, or the serial number can be entered as an 8-digit hexadecimal value directly into this field.

To capture the electronic serial number through a registration , see **"Register" on page 500** for further information.

To enter the serial number directly use the :ESNumber command.

The query form of the command (that is, :ESNumber?) can be used to determine the current setting of the ESN field.

Syntax

```
:ESNumber <'><8 character hex value><'>
:ESNumber?
```

Example

```
OUTPUT 714;"CALLP:AMPS:AUTH:ESN '12D4E678'"
OUTPUT 714:"CALLP:AMPS:AUTH:ESN?"
ENTER 714;Esn_val$
```

RAND_A

RAND_A is the 16 most significant bits of **RAND** and is entered as a 4-digit hexadecimal value. The mobile station stores and uses the most recent version of RAND_A in the authentication process. RAND_A is user definable.

The :RAND:A command is used to control this field.

The query form (that is, :RAND:A?) can be used to query the current field value.

Syntax

```
:RANDA
:RANDA?
```

Example

```
OUTPUT 714;"CALLP:AMPS:AUTH:RAND:A '4F5A'"
OUTPUT 714;"CALLP:AMPS:AUTH:RAND:A?"
ENTER 714;Rand_val$
```

ManualsPlus.com

RAND_B

RAND_B is the 16 least significant bits of **RAND** and is entered as a 4-digit hexadecimal value. The mobile station stores and uses the most recent version of RAND in the authentication process. RAND_B is user definable.

The :RAND:B command is used to control this field.

The query form (that is, :RAND:B?) can be used to query the current field value.

Syntax

```
:RAND:B
:RAND:B?
```

Example

```
OUTPUT 714;"CALLP:AMPS:AUTH:RAND:B ‘4F5A’"
OUTPUT 714;"CALLP:AMPS:AUTH:RAND:B?"
ENTER 714;Rand_val$
```

RANDSSD_1

RANDSSD_1 is the 24 most significant bits of the random number issued by the base station in the SSD Update Order. RANDSSD_1 is entered as a 6-digit hexadecimal value. RANDSSD_1 is user definable.

The :RAND:SSD1 command is used to control this field.

The query form (that is, :RAND:SSD1?) can be used to query the current field value.

Syntax

```
:RAND:SSD1
:RAND:SSD1?
```

Example

```
OUTPUT 714;"CALLP:AMPS:AUTH:RAND:SSD1 ‘4F5A26’"
OUTPUT 714;"CALLP:AMPS:AUTH:RAND:SSD1?"
ENTER 714;Rand_val$
```

ManualsPlus.com

RANDSSD_2

RANDSSD_2 is the 24 subsequent bits (following RANDSSD_1) of the random number issued by the base station in the SSD Update Order. RANDSSD_2 is entered as a 6-digit hexadecimal value. RANDSSD_2 is user definable.

The :RAND:SSD2 command is used to control this field.

The query form (that is, :RAND:SSD2?) can be used to query the current field value.

Syntax

```
:RAND:SSD2
:RAND:SSD2?
```

Example

```
OUTPUT 714;"CALLP:AMPS:AUTH:RAND:SSD2 ‘4F5A55’"
OUTPUT 714;"CALLP:AMPS:AUTH:RAND:SSD2?"
ENTER 714;Rand_val$
```

RANDSSD_3

RANDSSD_3 is the 8 least significant bits of the random number issued by the base station in the SSD Update Order. RANDSSD_3 is entered as a 2-digit hexadecimal value.

The :RAND:SSD3 command is used to control this field.

The query form (that is, :RAND:SSD3?) can be used to query the current field value.

Syntax

```
:RAND:SSD3
:RAND:SSD3?
```

Example

```
OUTPUT 714;"CALLP:AMPS:AUTH:RAND:SSD3 ‘4F’"
OUTPUT 714;"CALLP:AMPS:AUTH:RAND:SSD3?"
ENTER 714;Rand_val$
```

ManualsPlus.com

RAND_U

RAND_U is the 24-bit random number issued by the base station in the Unique Challenge Order. RAND_U is entered as a 6-digit hexadecimal value. RAND__U is user definable.

The :RAND:U command is used to control this field.

The query form (that is, :RAND:U?) can be used to query the current field value.

Syntax

```
:RAND:U <'><6 character hex value><'>
:RAND:U?
```

Example

```
OUTPUT 714;"CALLP:AMPS:AUTH:RAND:U '4F5A55'"
OUTPUT 714;"CALLP:AMPS:AUTH:RAND:U?"
ENTER 714;Rand_val$
```

SSDA

The :SSDA command is only available through the remote users interface. No field is displayed for this function on the test set. The user can enter a valid value into the Test Set along with other necessary shared secret data to avoid the SSD Upd process at the start of testing to reduce testing time.

SSDA is the most significant 64-bits of the SSD value stored in the mobile station. SSDA is entered as a 16-digit hexadecimal value.

The query form (that is, :SSDA?) can be used to query the current Test Set value.

Syntax

```
:SSDA <'><16 character hex value><'>
:SSDA?
```

Example

```
OUTPUT 714;"CALLP:AMPS:AUTH:SSDA '1234567890ABCDEF'"
OUTPUT 714;"CALLP:AMPS:AUTH:SSDA?"
ENTER 714;Ssda_val$
```

ManualsPlus.com

NEW

The :SSDA:NEW command is only available through the remote users interface. No field is displayed for this function on the test set. This value can be used during authentication to replace or query the SSD-A_NEW value in the Test Set.

The :SSDA:NEW value is the most significant 64-bits of the SSD value stored in the mobile station. SSDA:NEW is entered as a 16-digit hexadecimal value.

The query form (that is, :NEW?) can be used to query the current Test Set value.

Syntax

```
:NEW <'><16 character hex value><'>
:NEW?
```

Example

```
OUTPUT 714;"CALLP:AMPS:AUTH:SSDA:NEW '1234567890ABCDEF'"
OUTPUT 714;"CALLP:AMPS:AUTH:SSDA:NEW?"
ENTER 714;Ssda_new_val$
```

SSDB

The :SSDB command is only available through the remote users interface. No field is displayed for this function on the test set. The user can enter a valid value into the Test Set along with other necessary shared secret data to avoid the SSD Upd process at the start of testing to reduce testing time.

SSDB is the least significant 64-bits of the SSD value stored in the mobile station. SSDB is entered as a 16-digit hexadecimal value.

The :SSDB command is used to control this field.

The query form (that is, :SSDB?) can be used to query the current Test Set value.

Syntax

```
:SSDB <'><16 character hex value><'>
:SSDB?
```

Example

```
OUTPUT 714;"CALLP:AMPS:AUTH:SSDB '1234567890ABCDEF'"
OUTPUT 714;"CALLP:AMPS:AUTH:SSDB?"
ENTER 714;Ssdb_val$
```

ManualsPlus.com

NEW

The :SSDB:NEW command is only available through the remote users interface. No field is displayed for this function on the test set. This value can be used during authentication to replace or query the SSD-A_NEW value in the Test Set.

The :SSDB:NEW value is the least significant 64-bits of the SSD value stored in the mobile station. SSDA:NEW is entered as a 16-digit hexadecimal value.

The query form (that is, :NEW?) can be used to query the current Test Set value.

Syntax

```
:NEW <'><16 character hex value><'>
:NEW?
```

Example

```
OUTPUT 714;"CALLP:AMPS:AUTH:SSDB:NEW '1234567890ABCDEF'"
OUTPUT 714;"CALLP:AMPS:AUTH:SSDB:NEW?"
ENTER 714;Ssdb_new_val$
```

1 of N

The 1 of N field instructs the Test Set how many times to repeat a system parameter overhead message. The message contains RAND values, RAND_A and RAND_B. The RAND values are difficult for phones which do not support authentication to parse. This field allows for testing of these phones along with the testing of phones which support authentication by altering the number of times the system parameter message is sent to the mobile station.

Syntax

```
:OON <integer>
:OON?
```

Example

```
OUTPUT 714;"CALLP:AMPS:AUTH:OON 2"
OUTPUT 714;"CALLP:AMPS:AUTH:OON?
ENTER 714;Oon_set$
```

ManualsPlus.com

Programming the CALL DATA Screen

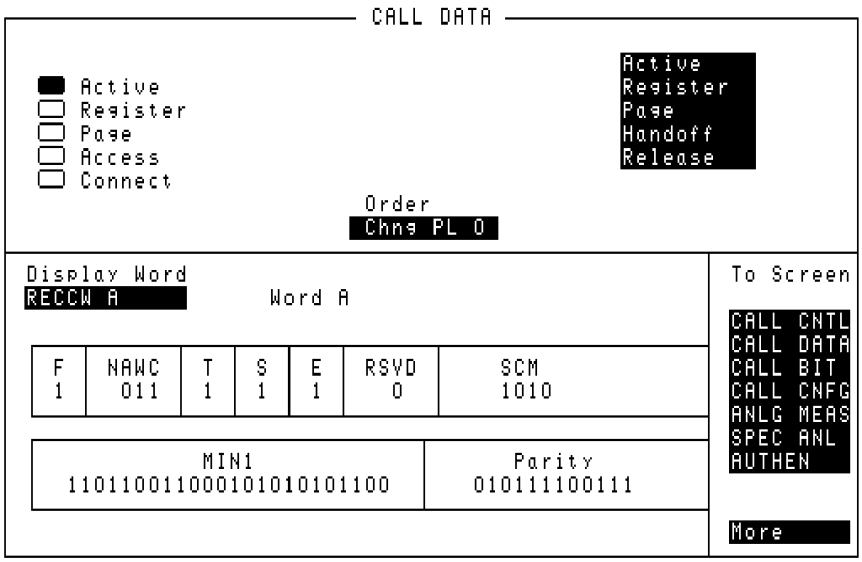

Figure 39 **The CALL DATA Screen**

ManualsPlus.com

This screen displays the decoded reverse control channel and reverse voice channel signaling messages received by the Test Set from the mobile station. Thirteen different decoded messages can be viewed on this screen. The message to be viewed is selected using the **`Display Word`** field. The messages which can be viewed are:

- Reverse Control Channel Messages for Paging, Origination, Orders, and Order Confirmation.
  - **“RECCW A Message Fields” on page 521**
  - **“RECCW B Message Fields” on page 523**
  - **“RECCW C Message Fields” on page 525**
  - **“RECCW D Message Fields” on page 526**
  - **“RECCW E Message Fields” on page 527**
- Reverse Voice Channel Messages for Order Confirmation.
  - **“RVCOrdCon Message Fields” on page 528**
- Reverse Control Channel Authentication Messages.
  - **“BSChalOrd Message Fields” on page 529**
  - **“AuthWORD Message Fields” on page 530**
  - **“UniqChCon Message Fields” on page 531**
- Reverse Voice Channel Authentication Messages.
  - **“RVCOrd Message Fields” on page 532**
  - **“RVCBSChal Message Fields” on page 533**
- NAMPS Reverse Voice Channel Messages.
  - **“NRVC Ord Message Fields” on page 534**
  - **“MRI Ord Message Fields” on page 536**

Refer to the *User’s Guide* for detailed information on the operation and manual use of the **`CALL DATA`** screen. .

[] Access

See “[] Access” on page 475 for programming information.

Active

See “Active” on page 476 for programming information.

[] Active

See “[] Active” on page 476 for programming information.

ManualsPlus.com

[] Connect

See "[] Connect" on page 482 for programming information.

Display Word

This field is used to select the desired reverse control channel or reverse voice channel message to be displayed.

The :DATA command is used to control this field.

The query form of the command (that is, :DATA?) can be used to determine which reverse control channel or reverse voice channel message is currently being displayed.

See "Reading the CALL DATA Screen Message Fields" on page 520 for information on how to read the contents of the individual messages.

Syntax

```
:DATA <'><Reverse Control or Voice Channel message word><'>
:DATA?
```

Example

```
OUTPUT 714;"CALLP:AMPS:DATA 'RECCW A'"
OUTPUT 714;"CALLP:AMPS:DATA?"
ENTER 714;Message$
```

ManualsPlus.com

Handoff

See "Handoff" on page 493 for programming information.

Order

See "Order" on page 495 for programming information.

Page

See "Page" on page 497 for programming information.

[] Page

See "[] Page" on page 497 for programming information.

See "Register" on page 500 for programming information.

[] Register

See "[] Register" on page 500 for programming information.

Release

See "Release" on page 501 for programming information.

ManualsPlus.com

Reading the CALL DATA Screen Message Fields

This section provides programming information on how to read the individual fields from the decoded reverse control channel and reverse voice channel signaling messages available on the **CALL DATA** screen.

The syntactical structure for reading one or more fields from an individual message is as follows:

General Syntax

```
CALLP:<message name>:<field name><?>[<;><additional field><?>]
```

Call Data Screen Message and Field Names

Table 52 on page 520 lists the message names used to access each of the signaling messages available on the **CALL DATA** screen.

Table 52 CALL DATA Screen Signaling Message Names

Message	Message Name
RECCW A	RECA
RECCW B	RECB
RECCW C	RECC
RECCW D	RECD
RECCW E	RECE
RVCOrdCon	RCOConfirm
BSChalOrd	BSCOrder
AuthWORD	AWORD
UniqChCon	UCConfirmation
RVCOrd	RVCOrder
RVCBSChal	RVCBSChallenge
NRVC Ord	NOConfirm
MRI Ord	MRIOrder

ManualsPlus.com

CALL DATA Screen Message Field Descriptions

This section describes the individual data fields contained in each of the decoded reverse control channel and reverse voice channel messages accessible through the **CALL DATA** screen.

RECCW A Message Fields

Display Word
RECCW A Word A

F	NAWC	T	S	E	RSVD	SCM
1	011	1	1	1	0	1010

MIN1	Parity
110110011000101010101100	010111100111

Figure 40 RECCW A Message Fields

F

This field displays the first word indication received from the mobile station.

- A ‘1’ indicates that this is the first word.
- A ‘0’ is displayed for all subsequent words.

NAWC

This field displays the number of additional words coming from the mobile station.

T

This field displays the message type received from the mobile station.

- Set to ‘1’ to identify the message as an origination or an order.
- Set to ‘0’ to identify the message as an order response or page response.

ManualsPlus.com

S

This field displays whether the serial number word is received from the mobile station.

- Set to ‘1’ if the serial number word is sent.
- Set to ‘0’ if the serial number word is not sent.

E

This field displays the extended address word received from the mobile.

- Set to ‘1’ if the extended address word is sent.
- Set to ‘0’ if the extended address word is not sent.

RSVD

This field is reserved for future use.

SCM

This field displays the mobile station’s received station class mark.

MIN1

This field displays the first part of the mobile identification number received from the mobile station.

Parity

This field displays the parity of the transmitted data.

ManualsPlus.com

RECCW B Message Fields

Display Word
RECCW B Word B

F	NAWC	Local	ORDQ	Order	LT
1	000	00011	000	00000	0

RSVD	MIN2	Parity
10000000	0111110010	101011101010

Figure 41 RECCW B Message Fields

F

This field displays the first word indication received from the mobile station.

- A ‘1’ indicates that this is the first word.
- A ‘0’ is displayed for all subsequent words.

NAWC

This field displays the number of additional words coming from the mobile.

LOCAL

This field displays the local control field. This field is specific to each system. The **ORDER** field must be set to local control for this field to be interpreted by the Test Set.

ORDQ

This field displays the received order qualifier. The field qualifies the order confirmation to a specific action.

ManualsPlus.com

ORDER

This field displays the **`Order`** field and identifies the order type received by the Test Set.

LT

This field displays the last-try code field.

RSVD

Reserved for future use.

MIN2

This field displays the second part of the mobile identification number received by the Test Set.

Parity

This field displays the parity of the received data.

ManualsPlus.com

RECCW C Message Fields

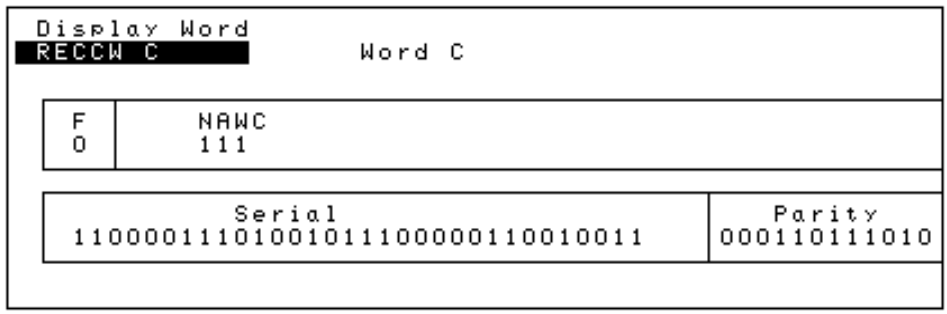

Figure 42 RECCW C Message Fields

F

This field displays the first word indication received from the mobile station.

- A ‘1’ indicates that this is the first word.
- A ‘0’ is displayed for all subsequent words.

NAWC

This field displays the number of additional words coming from the mobile.

Serial

This field displays the serial number of the mobile station.

Parity

This field displays the parity of the received data.

ManualsPlus.com

RECCW D Message Fields

Display Word
RECCW D Word D

F	NAWC	Dig 1	Dig 2	Dig 3	Dig 4
0	111	0001	0010	0011	0110

Dig 5	Dig 6	Dig 7	Dig 8	Parity
0101	0100	0111	1000	011011100001

Figure 43 RECCW D Message Fields

F

This field displays the first word indication received from the mobile station.

- A ‘1’ indicates that this is the first word.
- A ‘0’ is displayed for all subsequent words.

NAWC

This field displays the number of additional words coming from the mobile.

Dig 1 through Dig 8

These fields display digits 1 through 8 of the phone number dialed on the mobile station.

Parity

This field displays the parity of the received data.

ManualsPlus.com

RECCW E Message Fields

Display Word
RECCW E Word E

F	NAWC	Dig 9	Dig 10	Dig 11	Dig 12
0	011	1001	1010	0000	0000

Dig 13	Dig 14	Dig 15	Dig 16	Parity
0000	0000	0000	0000	010001000100

Figure 44 RECCW E Message Fields

F

This field displays the first word indication received from the mobile station.

- A ‘1’ indicates that this is the first word.
- A ‘0’ is displayed for all subsequent words.

NAWC

This field displays the number of additional words coming from the mobile.

Dig 9 through Dig 16

These fields display digits 9 through 16 of the phone number dialed on the mobile station.

Parity

This field displays the parity of the received data.

ManualsPlus.com

RVCOrdCon Message Fields

Display Word
RVCOrdCon — Order Confirmation Message

F	NAWC	T	Local	ORDQ	Order
1	00	1	00000	001	01011

RSVD	Parity
00000000000000000000	001010001010

Figure 45 RVCOrdCon Message Fields

F

This field displays the first word indication received from the mobile station.

- A ‘1’ indicates that this is the first word.
- A ‘0’ is displayed for all subsequent words.

NAWC

This field displays the number of additional words coming from the mobile.

T

This field displays the message type received from the mobile station.

- Set to ‘1’ to identify the message as an origination or an order.
- Set to ‘0’ to identify the message as an order response or page response.

ManualsPlus.com

Local

This field displays the local control field. This field is specific to each system. The **ORDER** field must be set to local control for this field to be interpreted by the Test Set.

ORDQ

This field displays the received order qualifier. The field qualifies the order confirmation to a specific action.

Order

This field displays the **Order** field and identifies the order type received by the Test Set.

RSVD

Reserved for future use.

Parity

This field displays the parity of the received data.

BSChalOrd Message Fields

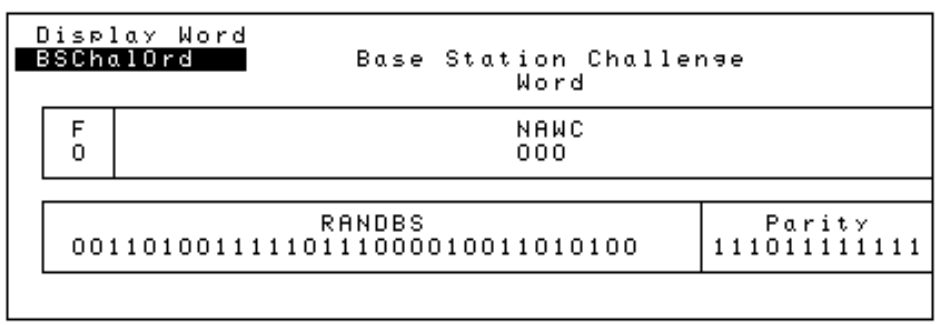

Figure 46 BSChalOrd Message Fields

F

This field displays the first word indication received from the mobile station.

- A ‘1’ indicates that this is the first word.
- A ‘0’ is displayed for all subsequent words.

ManualsPlus.com

NAWC

This field displays the number of additional words coming from the mobile.

RANDBS

This field displays the random number used in the SSD update procedure.

Parity

This field displays the parity of the received data.

AuthWORD Message Fields

Display Word
AuthWORD — Authentication Word

F	NAWC	COUNT
0	011	000100

RANDC	AUTHR	Parity
10001101	000101011001111000	010100011011

Figure 47 AuthWORD Message Fields

F

This field displays the first word indication received from the mobile station.

- A ‘1’ indicates that this is the first word.
- A ‘0’ is displayed for all subsequent words.

NAWC

This field displays the number of additional words coming from the mobile.

COUNT

This field displays the modulo-64 count maintained by the mobile station and used for authentication and anti-fraud purposes.

ManualsPlus.com

RANDC

This field displays the 8-bit number used to confirm the last RAND received by the mobile station.

AUTHR

Output of the authentication algorithm when responding to a Unique Challenge Order.

Parity

This field displays the parity of the received data.

UniqChCon Message Fields

Display Word
UniqChCon

Unique Challenge Order Confirmation Word

F	NAWC	RSVD
0	000	00000000000000

AUTHU	Parity
011001000000100000	110000110110

Figure 48 UniqChCon Message Fields

F

This field displays the first word indication received from the mobile station.

- A ‘1’ indicates that this is the first word.
- A ‘0’ is displayed for all subsequent words.

NAWC

This field displays the number of additional words coming from the mobile.

RSVD

Reserved for future use.

ManualsPlus.com

AUTHR

This field displays the output of the authentication algorithm when responding to a unique challenge order.

Parity

This field displays the parity of the received data.

RVCOrd Message Fields

Display Word
RVCOrd — Reverse Voice Channel Generic Order

F	NAWC	T	Local	ORDQ	Order
1	01	1	00000	000	10011

RSVD	Parity
0000000000000000000	000001110111

Figure 49 RVCOrd Message Fields

RVCOrd is a generic order word. It is utilized to receive an order associated with the specific mobile station under test. This order could be unique to the particular mobile station model or manufacturer.

F

This field displays the first word indication received from the mobile station.

- A ‘1’ indicates that this is the first word.
- A ‘0’ is displayed for all subsequent words.

NAWC

This field displays the number of additional words coming from the mobile.

T

This field displays the message type received from the mobile station.

- Set to ‘1’ to identify the message as an origination or an order.
- Set to ‘0’ to identify the message as an order response or page response.

ManualsPlus.com

ORDQ

This field displays the received order qualifier. The field qualifies the order confirmation to a specific action.

Local

This field displays the local control field. This field is specific to each system. The **ORDER** field must be set to local control for this field to be interpreted by the Test Set.

Order

This field displays the **Order** field and identifies the order type received by the Test Set.

RSVD

Reserved for future use.

Parity

This field displays the parity of the received data.

RVCBSChal Message Fields

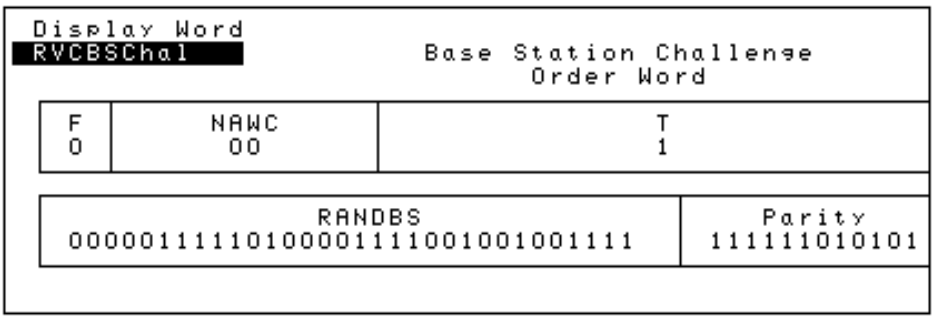

Figure 50 RVCBSChal Message Fields

F

This field displays the first word indication received from the mobile station.

- A ‘1’ indicates that this is the first word.
- A ‘0’ is displayed for all subsequent words.

ManualsPlus.com

NAWC

This field displays the number of additional words coming from the mobile.

T

This field displays the message type received from the mobile station.

- Set to ‘1’ to identify the message as an origination or an order.
- Set to ‘0’ to identify the message as an order response or page response.

RANDBS

This field displays the random number use in the SSD update procedure.

Parity

This field displays the parity of the received data.

NRVC Ord Message Fields

Display Word
NRVC Ord

Narrow Order or Order Confirmation Message

T1T2	AWC	Local	ORDQ	Order	DSCC	VMAC	OE
11	0	00000	001	01011	000	000	0

RSVD	Parity
0000000000000	100000000100

Figure 51 NRVC Ord Message Fields

T1T2

This field identifies the received message as an order confirmation, an order, or a called address message.

AWC

This field indicates the number of additional words coming.

ManualsPlus.com

Local

This field displays the local control field. This field is specific to each system. The **ORDER** field must be set to local control for this field to be interpreted by the Test Set.

ORDQ

This field displays the received order qualifier. The field qualifies the order confirmation to a specific action.

Order

This field displays the **Order** field and identifies the order type received by the Test Set.

DSCC

This field displays the current DSAT Color Code being transmitted by the mobile station.

VMAC

This field displays the voice mobile attenuation code. It shows the mobile station power level associated with the designated voice channel.

OE

The Odd/Even data field is used for adjacent channel protection.

RSVD

Reserved for future use.

ManualsPlus.com

MRI Ord Message Fields

Display Word
MRI Ord

MRI Order Message

T1T2	AWC	RSVD	RSSI	ORDQ	Order	DSCC
11	0	00	0	000	10101	000

VMAC	OE	BER	RSVD	Parity
100	1	0000000	000000	110001000000

Figure 52 MRI Ord Message Fields

Parity

This field displays the parity of the received data.

T1T2

This field identifies the received message as an order confirmation, an order, or a called address message.

AWC

This field indicates the number of additional words coming.

RSVD

Reserved for future use.

RSSI

This field displays the received signal strength over the last reporting period.

ORDQ

This field displays the received order qualifier. The field qualifies the order confirmation to a specific action.

ManualsPlus.com

Order

This field displays the **`Order`** field and identifies the order type received by the Test Set.

DSCC

This field displays the current DSAT Color Code being transmitted by the mobile station.

VMAC

This field displays the voice mobile attenuation code. It shows the mobile station power level associated with the designated voice channel.

OE

The Odd/Even data field is used for adjacent channel protection.

RSVD

Reserved for future use.

Parity

This field displays the parity of the received data.

Querying a Single Field

Example of Querying A Single Field

```
OUTPUT 714;"CALLP:AMPS:DATA 'RECCW A'"
OUTPUT 714;"CALLP:AMPS:RECA:SCM?"
ENTER 714;Scm$
PRINT Scm$
```

Example Printout

```
"1110"
```

ManualsPlus.com

Querying Multiple Fields With Single OUTPUT/ENTER

When multiple queries are combined into one command string the Test Set responds by sending one response message containing individual response message units separated by a response message unit separator (;).

Example of Multiple Queries Combined Into One Command String

```
OUTPUT 714;"CALLP:AMPS:RECA:NAWC?;SER?;EXT?;SCM?;MIN?"
OUTPUT 714;"CALLP:AMPS:DATA 'RECCW A'"
ENTER 714;Message$
PRINT Message$
```

Printed Test Set Response Message

```
"010";"1";"1";"1110";"110111100101101111010101"
```

In order to read individual response message units into individual string variables combined into one ENTER statement the programming language used must recognize the response message unit separator (;) as an entry terminator for each string in the input list. If the programming language used cannot recognize the response message unit separator (;) as an entry terminator then the response message must be read into one string and individual responses parsed out.

ManualsPlus.com

Programming the CALL BIT Screen

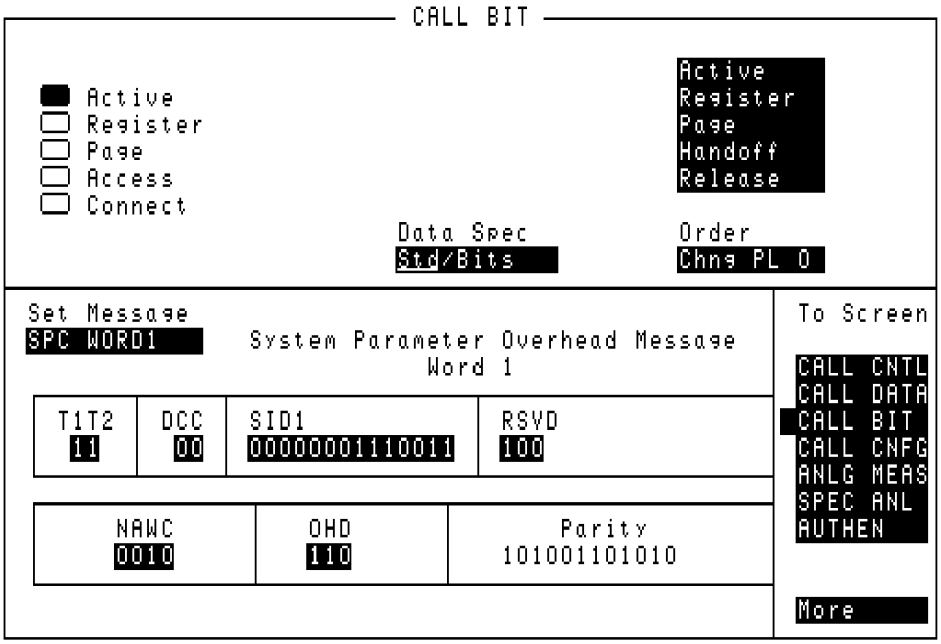

Figure 53 The CALL BIT Screen

The CALL BIT screen has been designed to give the advanced user the capability to modify the contents of the forward control channel and forward voice channel signaling messages used in a call processing messaging protocol.

A messaging protocol is defined as the sequence of messages sent from the Test Set to the mobile station to perform a desired action, such as registering a mobile station.

Modifying the contents of one or more messages may be required for testing the robustness of a mobile station's call processing algorithms or for new product development.

The CALL BIT screen should not be used to change any parameter that can be set on any other Call Processing Subsystem screen. The contents of the applicable fields on the CALL CONTROL screen and the CALL CONFIGURE screen are not updated to reflect any changes made while in the CALL BIT screen. There is no coupling between the CALL BIT screen and the Test Set.

ManualsPlus.com

For example: changing the value of the SAT color code field (SCC) in the forward control channel mobile station control message (MS IntVCh) does not change the setting of the **SAT:** field on the CALL CONTROL screen.

When using the CALL BIT screen the user is responsible for setting the contents of all messages used in a messaging protocol. When using the CALL BIT screen the Call Processing Subsystem host firmware sends the correct message(s) at the correct time(s) as defined in the applicable industry standard. Message content is the responsibility of the user.

Using the CALL BIT screen requires expert knowledge of the call processing messaging protocols used in the selected system (that is, the system selected in the **System Type** field on the CALL CONTROL screen).

The contents of twenty nine different messages can be modified from this screen. The message to be modified is selected using the **Set Message** field. The twenty nine messages whose contents can be modified are:

- Forward Control Channel Messages for Paging, Origination, Order Confirmation, and orders.
  - **"SPC WORD1 Message Fields" on page 551**
  - **"SPC WORD2 Message Fields" on page 553**
  - **"ACCESS Message Fields" on page 556**
  - **"REG INC Message Fields" on page 558**
  - **"REG ID Message Fields" on page 560**
  - **"C-FILMESS Message Fields" on page 562**
  - **"MS WORD1 Message Fields" on page 565**
  - **"MSMessOrd Message Fields" on page 566**
  - **"MS IntVCh Message Fields" on page 568**
  - **"FVC O Mes Message Fields" on page 570**
  - **"FVC V Mes Message Fields" on page 572**
- Forward Control Channel Authentication Messages.
  - **"RandChalA Message Fields" on page 574**
  - **"RandChalB Message Fields" on page 576**
  - **"RAND SSD1 Message Fields" on page 578**
  - **"RAND SSD2 Message Fields" on page 579**
  - **"RAND SSD3 Message Fields" on page 580**
  - **"BSChalCon Message Fields" on page 581**
  - **"UniqChOrd Message Fields" on page 583**

ManualsPlus.com

- Forward Voice Channel Authentication Messages.
  - **"FVC SSD1 Message Fields" on page 584**
  - **"FVC SSD2 Message Fields" on page 585**
  - **"FVC SSD3 Message Fields" on page 586**
  - **"FVCBSCon Message Fields" on page 587**
  - **"FVCUniqCh Message Fields" on page 588**
- NAMPS Forward Voice Channel Messages.
  - **"EXT PROT Message Fields" on page 589**
  - **"NCH ASN Message Fields" on page 591**
  - **"NMS FVC Message Fields" on page 593**
  - **"MRI MES Message Fields" on page 595**
  - **"WNHO MESS Message Fields" on page 597**
  - **"NHO MES Message Fields" on page 599**

When the CALL BIT screen is displayed and the Call Processing Subsystem is in the **`Connect`** state, the host firmware constantly monitors the mobile station's transmitted carrier power. If the power falls below 0.0005 Watts the error message **`RF Power Loss indicates loss of Voice Channel`** will be displayed and the Test Set will terminate the call and return to the **`Active`** state.

NOTE: In order to ensure that the host firmware makes the correct decisions regarding the presence of the mobile stations's RF carrier, the Test Set's RF power meter should be zeroed before using the Call Processing Subsystem. Failure to zero the power meter can result in erroneous RF power measurements. See**"Conditioning the Test Set for Call Processing" on page 469** for information on zeroing the RF Power meter manually.

Refer to the *User's Guide* for detailed information on the operation and manual use of the **`CALL BIT`** screen. The field descriptions for each of the decoded messages are given in the "CALL BIT Screen Message Field Descriptions" section of "Call Processing Subsystem" chapter, in the *User's Guide*.

The information presented in this section covers the **`CALL BIT`** screen programming commands and how to use them.

ManualsPlus.com

[] Access

See "[] Access" on page 475 for programming information.

Active

See "Active" on page 476 for programming information.

[] Active

See "[] Active" on page 476 for programming information.

[] Connect

See "[] Connect" on page 482 for programming information.

Data Spec

This field is used to determine how the contents of the signaling messages are built.

- **`Std`** = Use the signaling formats defined in the applicable industry standard to build the forward control channel and forward voice channel signaling messages. Use the contents of the applicable fields on the CALL CONTROL screen and the CALL CONFIGURE screen to obtain information necessary to build the messages. Whenever a signaling message is used, update the contents of all fields in that message on the CALL BIT screen.
- **`Bits`** = Use the bit patterns as set on the CALL BIT screen to build all forward control channel and forward voice channel signaling messages. For any call processing function (that is, setting the message stream on the active control channel, registering the mobile station, paging the mobile station, handing off the mobile station or releasing the mobile station) the user is responsible for setting the contents of all signaling messages used in that function. The Call Processing Subsystem host firmware uses the messaging protocol as defined in the applicable industry standard.

The contents of the applicable fields on the CALL CONTROL screen and the CALL CONFIGURE screen are not updated to reflect any changes made while in the Bits mode. There is no coupling between the Bits mode and the Test Set. For example: if a mobile station was actively connected to the Test Set on a voice channel and the user changed the **`CHAN`** field on the forward voice channel mobile station control message (FVC V Mes) and sent that message to the mobile station, the mobile station would change its voice channel assignment. However, the Test Set will stay on the voice channel assignment specified in the **`Chan:`** field on the CALL CONTROL screen. This situation will result in a dropped call. The Bits mode should not be used to change any parameter that can be set on any other Call Processing Subsystem screen.

ManualsPlus.com

The :DSPecifier command is used to control this field.

The query form of the command (that is, :DSPecifier?) can be used to determine which method is currently being used to build the contents of the signaling messages.

See "Reading the CALL BIT Screen Message Fields" on page 546 for information on how to read the contents of the individual messages.

Syntax

```
:DSPecifier <'><STD/BITS><'>
:DSPecifier?
```

Example

```
OUTPUT 714;"CALLP:AMPS:DSP?"
OUTPUT 714;"CALLP:AMPS:DSP 'STD'"
ENTER 714;Build_method$
```

Handoff

See "Handoff" on page 493 for programming information.

Order

This field is used to send an order type mobile station control message on the forward voice channel to the Mobile Station. The orders available are:

- Change Power to Power Level 0 - 7
- Maintenance (put the mobile station in maintenance mode)
- Alert (alert the mobile station)

The **`Order`** field is a one-of-many selection field. To send an order to the mobile station position the cursor on the **`Order`** field and select it. A list of choices is displayed. Position the cursor on the desired order and select it. Once the selection is made a mobile station control message is sent to the Mobile Station. The **`Access`** annunciator will light momentarily while the Test Set is sending the mobile station control message.

A mobile station must be actively connected on a voice channel to the Test Set (that is, the **`Connect`** annunciator lit) before attempting to send an order to a mobile station.

ManualsPlus.com

Page

See "Page" on page 497 for programming information.

[] Page

See "[] Page" on page 497 for programming information.

Register

See "Register" on page 500 for programming information.

[] Register

See "[] Register" on page 500 for programming information.

Release

See "Release" on page 501 for programming information.

Send Word

The Send Word field is an immediate action field. The current word in the **`Set Message`** field is immediately sent to the mobile station. The **`Send Word`** command is only intended for use with MSMessOrd and does not provide any method for controlling the timing of the word sent to the mobile station.

ManualsPlus.com

Set Message

This field is used to select the desired forward control channel or forward voice channel message to be displayed.

The :MESSage command is used to control this field.

The query form of the command (that is, :MESSage?) can be used to determine which forward control channel or forward voice channel message is currently being displayed.

See "Reading the CALL BIT Screen Message Fields" on page 546 for information on how to read the contents of the individual messages.

Syntax

```
:MESSage <'><Forward Control or Voice Channel Message Word><'>
:MESSage?
```

Example

```
OUTPUT 714;"CALLP:AMPS:MESS 'SPC WORD1'"
OUTPUT 714;"CALLP:AMPS:MESS?"
ENTER 714;Message$
```

ManualsPlus.com

Reading the CALL BIT Screen Message Fields

This section provides programming information on how to read the contents of individual fields in the signaling messages available on the **CALL BIT** screen.

The syntactical structure for reading the contents of one or more fields from an individual message is as follows:

General Syntax

```
CALLP:AMPS:<message name>:<field name><?>[<;><additional field><?>]
```

Table 53 on page 546 lists the message names used to access each of the signaling messages available on the **CALL BIT** screen.

Table 53 CALL BIT Screen Signaling Message Names

Message	Message Name
SPC WORD1	SPOM1/SPOMESSAGE1
SPC WORD2	SPOM2/SPOMESSAGE2
ACCESS	ACCess
REG INC	RINCrement
REG ID	RIDentify
C-FILMESS	CFMessage
MS WORD1	MSWord
MSMessOrd	MSORder
MS IntvcH	MSVoice
FVC O Mes	FVORder
FVC C Mes	FVVoice
RandChalA	RCA
RandChalB	RCB
RAND SSD1	RSSD1
RAND SSD2	RSSD2
RAND SSD3	RSSD3

ManualsPlus.com

Table 53 **CALL BIT Screen Signaling Message Names (Continued)**

Message	Message Name
BSChalCon	BSCConfirmation
UniqChOrd	UCORder
FVC SSD1	FVCSSD1
FVC SSD2	FVCSSD2
FVC SSD3	FVCSSD3
FVCBSCon	FVCBSConfirmation
FVCUniqCh	FVCUChallenge
EXT PROT	EPFControl | EXTP
NCH ASN	NCAMessage | NCHA
NMS FVC	NFVMessage | NFVC
MRI MES	MRIMessage | NRMI
WNHO MES	WNHMessage
NHO MES	NHOMessage

Example of Querying A Single Field

```
OUTPUT 714;"CALLP:AMPS:MESS 'SPC WORD1'"
OUTPUT 714;"CALLP:AMPS:SPOM1:SID?"
ENTER 714;Sid$
PRINT Sid$
```

Example Printout

```
"00000001110011"
```

Querying Multiple Fields With Single OUTPUT/ENTER

When multiple querries are combined into one command string the Test Set responds by sending one response message containing individual response message units separated by a response message unit separator (;).

ManualsPlus.com

Example of Multiple Querries Combined Into One Command String

```
OUTPUT 714;"CALLP:AMPS:MESS 'SPC WORD1'"
OUTPUT 714;"CALLP:AMPS:SPOM1:DCC?;SID?;OHD?"
ENTER 714;Message$
PRINT Message$
```

Printed Test Set Response Message

```
"01";"00000001110011";"110"
```

In order to read individual response message units into individual string variables combined into one ENTER statement the programming language used must recognize the response message unit separator (;) as an entry terminator for each string in the input list. If the programming language used cannot recognize the response message unit separator (;) as an entry terminator then the response message must be read into one string and individual responses parsed out.

ManualsPlus.com

Modifying the CALL BIT Screen Message Fields

This section provides programming information on how to set the contents of individual fields in the signaling messages available on the **CALL BITS** screen.

The syntactical structure for setting the contents of a field in an individual message is as follows:

General Syntax'

```
CALLP:<message name>:<field name><space><'><data string><'>
```

Table 54, "CALL BIT Screen Signaling Message Names," on page 549 lists the message names used to access each of the signaling messages available on the **CALL BIT** screen.

Table 54 CALL BIT Screen Signaling Message Names

Message	Message Name
SPC WORD1	SPOM1/SPOMESSAGE1
SPC WORD2	SPOM2/SPOMESSAGE2
ACCESS	ACCess
REG INC	RINCrement
REG ID	RIDentify
C-FILMESS	CFMessage
MS WORD1	MSWord
MSMessOrd	MSORder
MS IntvcH	MSVoice
FVC O Mes	FVORder
FVC C Mes	FVVoice
RandChalA	RCA
RandChalB	RCB
RAND SSD1	RSSD1
RAND SSD2	RSSD2
RAND SSD3	RSSD3

ManualsPlus.com

Table 54 CALL BIT Screen Signaling Message Names (Continued)

Message	Message Name
BSChalCon	BSCConfirmation
UniqChOrd	UCORder
FVC SSD1	FVCSSD1
FVC SSD2	FVCSSD2
FVC SSD3	FVCSSD3
FVCBSCon	FVCBSConfirmation
FVCUniqCh	FVCUChallenge
EXT PROT	EPFControl/EXTP
NCH ASN	NCAMessage/NCHA
NMS FVC	NFVMessage/NFVC
MRI MES	MRIMessage/NMRI
WNHO MES	WNHMessage
NHO MES	NHOMessage

Example of Modifying A Single Field

```
OUTPUT 714;"CALLP:AMPS:SPOM1:SID '00000001110011'"
```

Example of Modifying Multiple Fields With One OUTPUT

```
OUTPUT   714;"CALLP:AMPS:SPOM1:DCC   '01';SID   '00000001110011';OHD
'110'"
```

ManualsPlus.com

CALL BIT Screen Message Field Descriptions

This section describes the individual data fields contained in each of the forward control channel and forward voice channel messages.

SPC WORD1 Message Fields

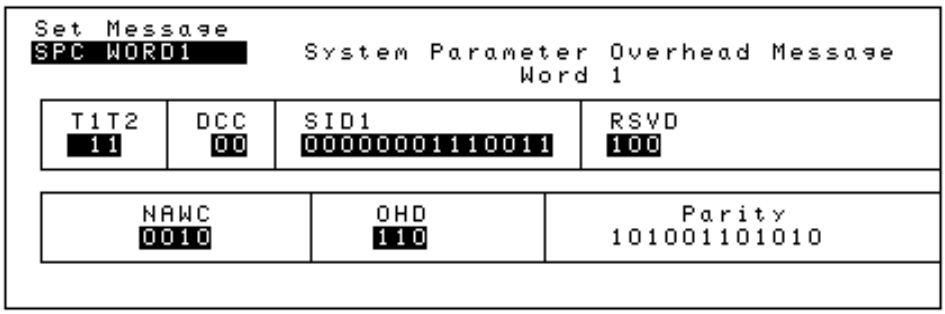

Figure 54 SPC WORD1 Message Fields

T1T2

This field identifies the received message as an order confirmation, an order, or a called address message.

2 binary characters required.

DCC

This field sets the digital color code.

2 binary characters required.

ManualsPlus.com

SID1

First part of the system identification field. The field contains the decimal equivalent of the 14 most significant bits of the system identification number.

14 binary characters required.

RSVD

Reserved for future use.

3 binary characters required.

NAWC

This field displays the number of additional words coming.

4 binary characters required.

OHD

This field displays the overhead message type.

- A ‘100’ indicates a global action message.
- A ‘110’ indicates that this is the first word of the system overhead parameter message.
- A ‘111’ indicates this is the second word of the system parameter overhead message.

3 binary characters required.

Parity

Parity field. The contents of the Parity field cannot be set by the user. The Test Set calculates the parity bits.

ManualsPlus.com

SPC WORD2 Message Fields

Set Message
SPC WORD2 System Parameter Overhead Message Word 2

T1T2	DCC	S	E	REGH	REGR	DTX	N-1
11	00	1	1	1	1	00	10110

RCF	CPA	CMAX-1	END	OHD	Parity
1	1	0010101	0	111	001100111111

Figure 55 SPC WORD2 Message Fields

T1T2

This field identifies the received message as an order confirmation, an order, or a called address message.

2 binary characters required.

DCC

Digital color code field.

2 binary characters required.

S

This field displays whether the serial number word is sent to the mobile station.

- Set to ‘1’ if the serial number word is sent.
- Set to ‘0’ if the serial number word is not sent.

1 binary character required.

ManualsPlus.com

E

This field displays the extended address word sent to the mobile.

- Set to ‘1’ if the extended address word is sent.
- Set to ‘0’ if the extended address word is not sent.

1 binary character required.

REGH

Registration field for home stations.

1 binary character required.

REGR

Registration field for roaming stations.

1 binary character required.

DTX

Discontinuous transmission field.

2 binary characters required.

N-1

N is the number of paging channels in the system.

5 binary characters required.

RCF

Read-control-filler field.

1 binary character required.

ManualsPlus.com

CPA

Combined paging/access field.

1 binary character required.

CMAX-1

CMAX is the number of access channels in the system.

7 binary characters required.

END

End indication field.

- Set to 1 to indicate the last word of the overhead message train.
- Set to 0 if not the last word.

1 binary characters required.

OHD

This field displays the overhead message type.

- A ‘100’ indicates a global action message.
- A ‘110’ indicates that this is the first word of the system overhead parameter message.
- A ‘111’ indicates this is the second word of the system parameter overhead message.

3 binary characters required.

Parity

Parity field. The contents of the Parity field cannot be set by the user. The Test Set calculates the parity bits.

ManualsPlus.com

ACCESS Message Fields

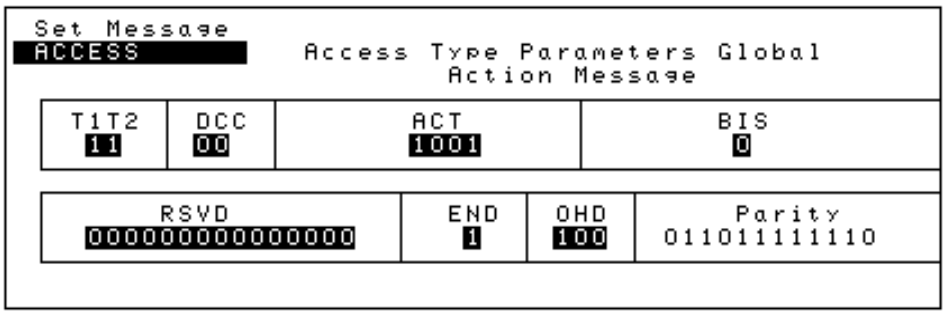

Figure 56 ACCESS Message Fields

T1T2

This field identifies the received message as an order confirmation, an order, or a called address message.

2 binary characters required.

DCC

Digital color code field.

2 binary characters required.

ACT

Global Action Field.

4 binary characters required.

ManualsPlus.com

BIS

Busy-Idle status field.

1 binary character required.

RSVD

Reserved for future use, all bits must be set as indicated.

15 binary characters required.

END

End indication field.

- Set to 1 to indicate the last word of the overhead message train.
- Set to 0 if not the last word.

1 binary character required.

OHD

This field displays the overhead message type.

- A ‘100’ indicates a global action message.
- A ‘110’ indicates this is the first word of the system parameter overhead parameter message.
- A ‘111’ indicates this is the second word of the system parameter overhead message.

3 binary characters required.

Parity

Parity field. The contents of the Parity field cannot be set by the user. The Test Set calculates the parity bits.

ManualsPlus.com

REG INC Message Fields

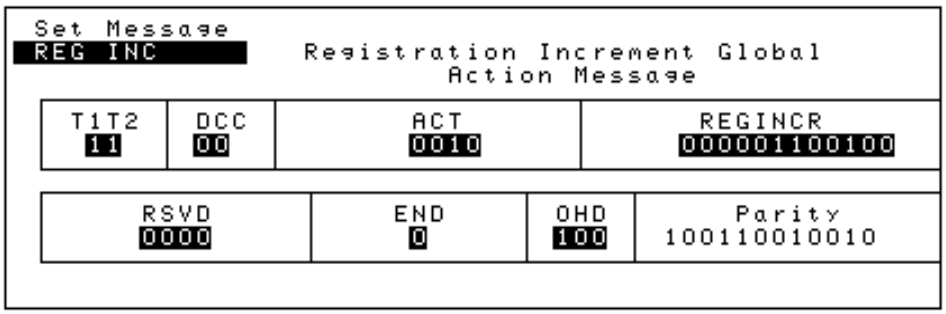

Figure 57 REG INC Message Fields

T1T2

This field identifies the received message as an order confirmation, an order, or a called address message.

2 binary characters required.

DCC

Digital color code field.

2 binary characters required.

ACT

Global Action Field.

4 binary characters required.

ManualsPlus.com

REGINCR

Registration increment field.

12 binary characters required.

RSVD

Reserved for future use, all bits must be set as indicated.

4 binary characters required.

END

End indication field.

- Set to 1 to indicate the last word of the overhead message train.
- Set to 0 if not the last word.

1 binary character required.

OHD

This field displays the overhead message type.

- A ‘100’ indicates a global action message.
- A ‘110’ indicates this is the first word of the system parameter overhead parameter message.
- A ‘111’ indicates this is the second word of the system parameter overhead message.

3 binary character required.

Parity

Parity field. The contents of the Parity field cannot be set by the user. The Test Set calculates the parity bits.

ManualsPlus.com

REG ID Message Fields

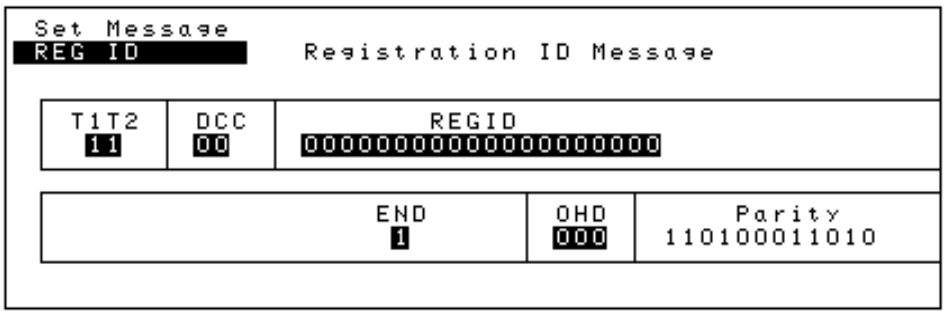

Figure 58 REG ID Message Fields

T1T2

This field identifies the received message as an order confirmation, an order, or a called address message.

2 binary characters required.

DCC

Digital color code field.

2 binary characters required.

REGID

Registration ID field.

20 binary character required.

END

End indication field.

- Set to 1 to indicate the last word of the overhead message train.
- Set to 0 if not the last word.

1 binary character required.

ManualsPlus.com

OHD

This field displays the overhead message type.

- A ‘100’ indicates a global action message.
- A ‘110’ indicates this is the first word of the system parameter overhead parameter message.
- A ‘111’ indicates this is the second word of the system parameter overhead message.

3 binary character required.

Parity

Parity field. The contents of the Parity field cannot be set by the user. The Test Set calculates the parity bits.

ManualsPlus.com

C-FILMESS Message Fields

Set Message
C-FILMESS Control-filler Message

T1T2	DCC	F1	CMAC	RSVD1	F2	RSVD2
11	00	010111	000	00	11	00

F3	WFOM	F4	OHD	Parity
1	1	1111	001	001000000011

Figure 59 C-FILMESS Message Fields

T1T2

This field identifies the received message as an order confirmation, an order, or a called address message.

2 binary characters required.

DCC

Digital color code field.

2 binary characters required.

ManualsPlus.com

CMAC

Control mobile attenuation field. Indicates the mobile station power level associated with reverse control channel.

3 binary character required.

RSVD1

Reserved for future use, all bits must be set as indicated.

2 binary characters required.

F2

Control filler message field 2. All bits must be set as indicated.

2 binary characters required

RSVD2

Reserved for future use, all bits must be set as indicated.

2 binary characters required.

F3

Control filler message field 3. All bits must be set as indicated.

1 binary character required.

WFOM

Wait-for-overhead-message field.

1 binary character required.

ManualsPlus.com

F4

Control filler message field 4. All bits must be set as indicated.

4 binary character required.

OHD

This field displays the overhead message type.

- A ‘100’ indicates a global action message.
- A ‘110’ indicates this is the first word of the system parameter overhead parameter message.
- A ‘111’ indicates this is the second word of the system parameter overhead message.

3 binary character required.

Parity

Parity field. The contents of the Parity field cannot be set by the user. The Test Set calculates the parity bits.

ManualsPlus.com

MS WORD1 Message Fields

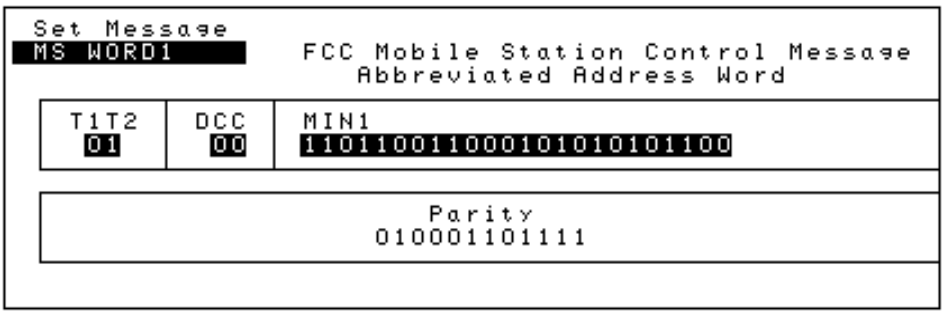

Figure 60 MS WORD1 Message Fields

T1T2

This field identifies the received message as an order confirmation, an order, or a called address message.

2 binary characters required.

DCC

Digital color code field.

2 binary characters required.

MIN1

First part of the mobile identification number field.

24 binary character required.

Parity

Parity field. The contents of the Parity field cannot be set by the user. The Test Set calculates the parity bits.

ManualsPlus.com

MSMessOrd Message Fields

```
Set Message
MSMessOrd        FCC Mobile Station Control Message
                     Extended Address Word

| T1T2 | SCC | MIN2        | RSVD | Local |
|  10  |  11 | 0111110010  |  0   | 00000 |

| ORDQ | Order | Parity       |
|  000 | 00000 | 000110100001 |
```

Figure 61 MSMessOrd Message Fields

Send Word

The Send Word field sends the currently defined bits displayed in the MSMessOrd field to the mobile station.

T1T2

This field identifies the received message as an order confirmation, an order, or a called address message.

2 binary characters required.

SCC

SAT color code field.

2 binary characters required.

MIN2

Second part of the mobile identification number field.

10 binary character required.

RSVD

Reserved for future use, all bits must be set as indicated.

1 binary character required.

ManualsPlus.com

LOCAL

This field is specific to each system. The **ORDER** field must be set to local control for this field to be interpreted.

5 binary character required.

ORDQ

The order qualifier field qualifies the order confirmation to a specific action.

3 binary character required.

ORDER

This field identifies the order type.

5 binary character required.

Parity

Parity field. The contents of the Parity field cannot be set by the user. The Test Set calculates the parity bits.

ManualsPlus.com

MS IntVCh Message Fields

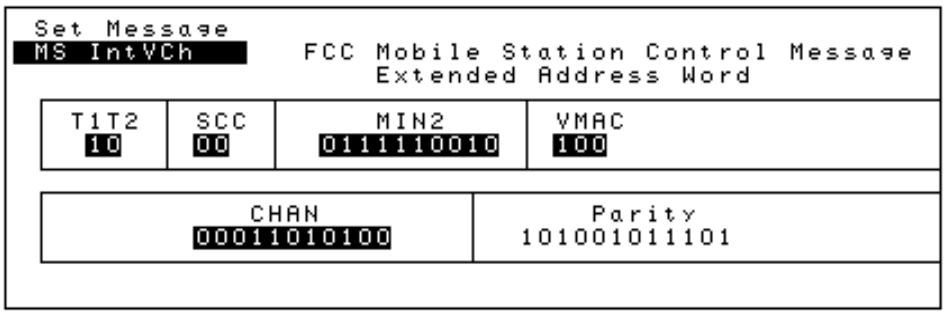

Figure 62 MS IntVCh Message Fields

T1T2

This field identifies the received message as an order confirmation, an order, or a called address message.

2 binary characters required.

SCC

SAT color code field.

2 binary characters required.

MIN2

Second part of the mobile identification number field.

10 binary character required.

ManualsPlus.com

VMAC

This field displays the voice mobile attenuation code. It shows the mobile station's power level associated with the designated voice channel.

1 binary character reqired.3

CHAN

Channel number field. Indicates the designated voice channel.

11 binary character required.

Parity

Parity field. The contents of the Parity field cannot be set by the user. The Test Set calculates the parity bits.

ManualsPlus.com

FVC O Mes Message Fields

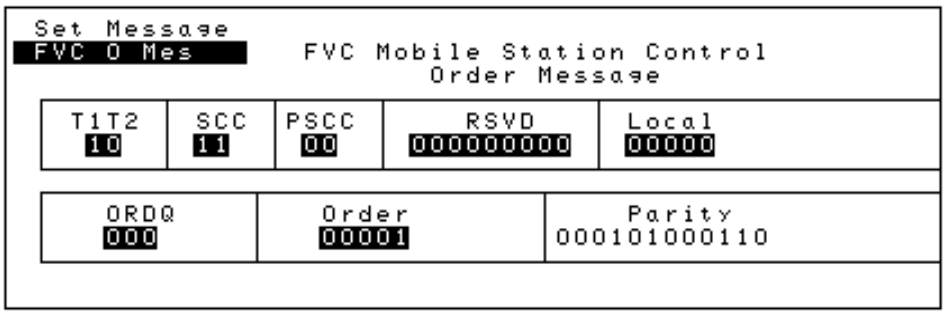

Figure 63 FVC O Mes Message Fields

T1T2

This field identifies the received message as an order confirmation, an order, or a called address message.

2 binary characters required.

SCC

SAT color code for new channel.

2 binary characters required.

PSCC

Present SAT color code. Indicates the SAT color code associated with the present channel.

2 binary characters required.

RSVD

Reserved for future use, all bits must be set as indicated.

9 binary character required.

LOCAL

Local control field. This field is specific to each system. The ORDER field must be set to local control for this field to be interpreted.

5 binary character required.

ManualsPlus.com

ORDQ

Order qualifier field. Qualifies the order to a specific action.

3 binary character required.

ORDER

Order field. Identifies the order type.

5 binary character required.

Parity

Parity field. The contents of the Parity field cannot be set by the user. The Test Set calculates the parity bits.

ManualsPlus.com

FVC V Mes Message Fields

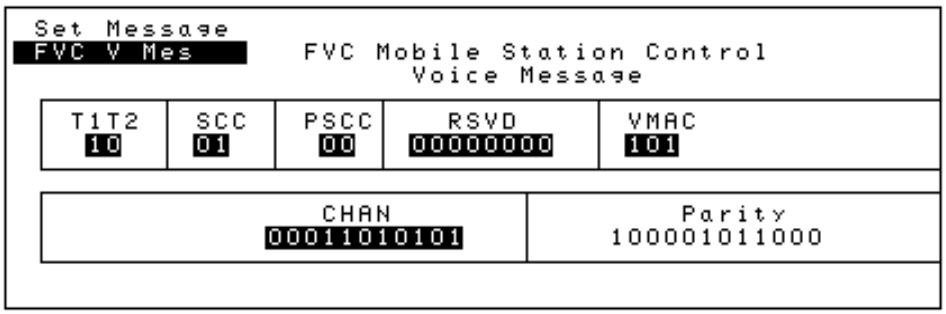

Figure 64 FVC V Mes Message Fields

T1T2

This field identifies the received message as an order confirmation, an order, or a called address message.

2 binary characters required.

SCC

SAT color code for new channel.

2 binary characters required.

PSCC

Present SAT color code. Indicates the SAT color code associated with the present channel.

2 binary characters required.

ManualsPlus.com

RSVD

Reserved for future use, all bits must be set as indicated.

8 binary character required.

VMAC

This field displays the voice mobile attenuation code. It shows the mobile station power level associated with the designated voice channel.

3 binary character required.

CHAN

Channel number field. Indicates the designated voice channel.

11 binary character required.

Parity

Parity field. The contents of the Parity field cannot be set by the user. The Test Set calculates the parity bits.

ManualsPlus.com

RandChalA Message Fields

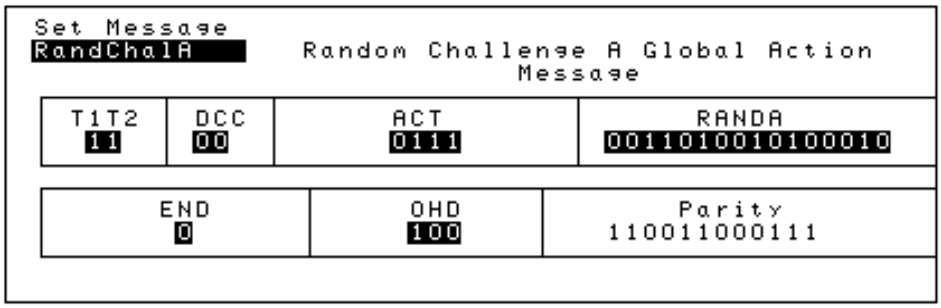

Figure 65 RandChalA Message Fields

T1T2

This field identifies the received message as an order confirmation, an order, or a called address message.

2 binary characters required.

DCC

Digital color code for new channel.

2 binary characters required.

ACT

Global action field.

4 binary characters required.

RANDA

The 16 most significant bits of the 32 bit RAND variable stored by a mobile for use in the authentication process.

16 binary characters required.

ManualsPlus.com

END

End indication field.

- Set to 1 to indicate the last word of the overhead message train.
- Set to 0 if not the last word.

1 binary character required.

OHD

This field displays the overhead message type.

- A ‘100’ indicates a global action message.
- A ‘110’ indicates this is the first word of the system parameter overhead parameter message.
- A ‘111’ indicates this is the second word of the system parameter overhead message.

3 binary character required.

Parity

Parity field. The contents of the Parity field cannot be set by the user. The Test Set calculates the parity bits.

ManualsPlus.com

RandChalB Message Fields

Set Message
RandChalB — Random Challenge B Global Action Message

T1T2	DCC	ACT	RANDB
11	00	1011	1011000001011111

END	OHD	Parity
1	100	111100101010

Figure 66 RandChalB Message Fields

T1T2

This field identifies the received message as an order confirmation, an order, or a called address message.

2 binary characters required.

DCC

Digital color code for new channel.

2 binary characters required.

ManualsPlus.com

ACT

Global action field.

4 binary characters required.

RANDB

The 16 least significant bits of the 32 bit RAND variable stored by a mobile for use in the authentication process.

16 binary characters required.

END

End indication field.

- Set to 1 to indicate the last word of the overhead message train.
- Set to 0 if not the last word.

1 binary character required.

OHD

This field displays the overhead message type.

- A ‘100’ indicates a global action message.
- A ‘110’ indicates this is the first word of the system parameter overhead parameter message.
- A ‘111’ indicates this is the second word of the system parameter overhead message.

3 binary characters required.

Parity

Parity field. The contents of the Parity field cannot be set by the user. The Test Set calculates the parity bits.

ManualsPlus.com

RAND SSD1 Message Fields

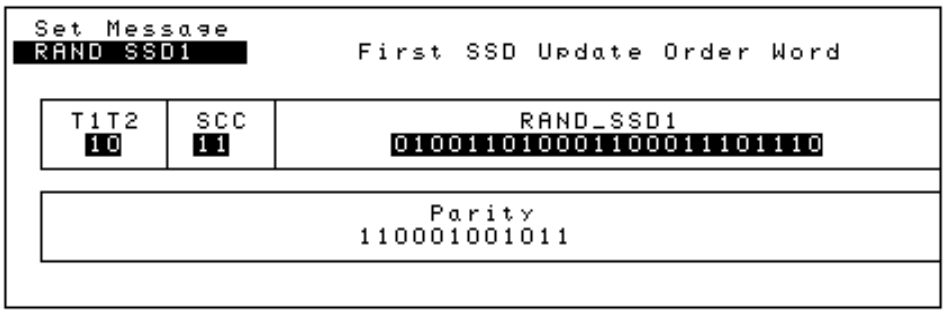

Figure 67 RAND SSD1 Message Fields

T1T2

This field identifies the received message as an order confirmation, an order, or a called address message.

2 binary characters required.

SCC

SAT color code for new channel.

2 binary characters required.

RAND_SSD1

The most significant 24-bits of the random number issued by the base station in the SSD Update Order.

24 binary characters required.

Parity

Parity field. The contents of the Parity field cannot be set by the user. The Test Set calculates the parity bits.

ManualsPlus.com

RAND SSD2 Message Fields

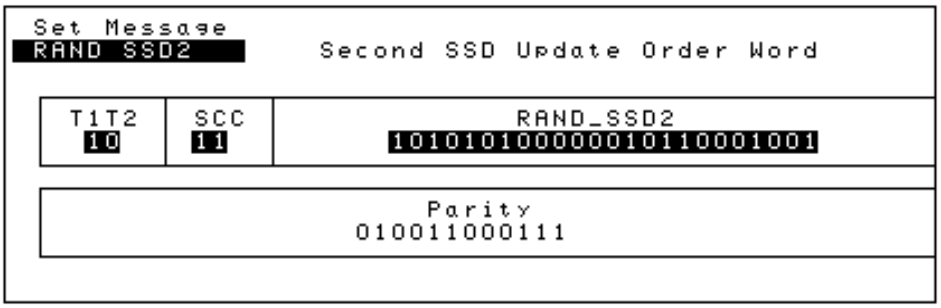

Figure 68 RAND SSD2 Message Fields

T1T2

This field identifies the received message as an order confirmation, an order, or a called address message.

2 binary characters required.

SCC

SAT color code for new channel.

2 binary characters required.

RAND_SSD2

The subsequent 24-bits (following RANSSSD_1) of the random number issued by the base station in the SSD Update Order.

24 binary characters required.

Parity

Parity field. The contents of the Parity field cannot be set by the user. The Test Set calculates the parity bits.

ManualsPlus.com

RAND SSD3 Message Fields

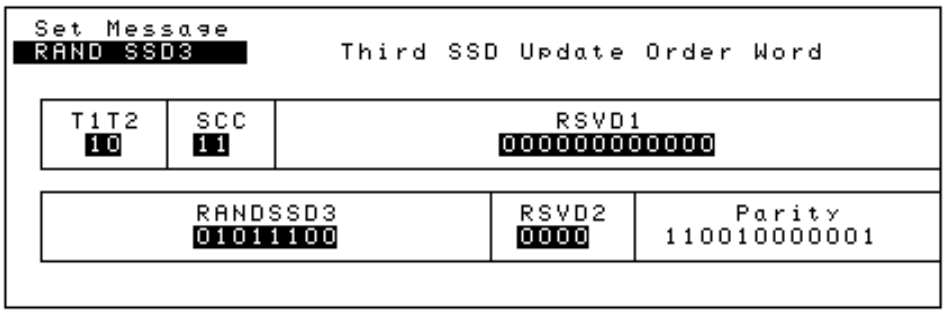

Figure 69 RAND SSD3 Message Fields

T1T2

This field identifies the received message as an order confirmation, an order, or a called address message.

2 binary characters required.

SCC

SAT color code for new channel.

2 binary characters required.

RSVD1

Reserved for future use.

12 binary characters required.

ManualsPlus.com

RANDSSD3

The least significant 8-bits of the random number issued by the base station in the SSD Update Order.

8 binary characters required.

RSVD2

Reserved for future use.

4 binary characters required.

Parity

Parity field. The contents of the Parity field cannot be set by the user. The Test Set calculates the parity bits.

BSChalCon Message Fields

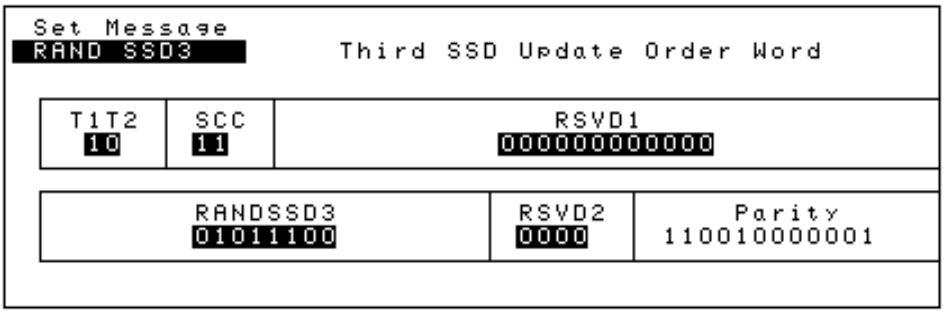

Figure 70 BSChalCon Message Fields

ManualsPlus.com

T1T2

This field identifies the received message as an order confirmation, an order, or a called address message.

2 binary characters required.

SCC

SAT color code for new channel.

2 binary characters required.

RSVD1

Reserved for future use.

2 binary characters required.

AUTHBS

Output response of the authentication algorithm initiated by the Base Station Challenge order.

18 binary characters required.

RSVD2

Reserved for future use.

4 binary characters required.

Parity

Parity field. The contents of the Parity field cannot be set by the user. The Test Set calculates the parity bits.

ManualsPlus.com

UniqChOrd Message Fields

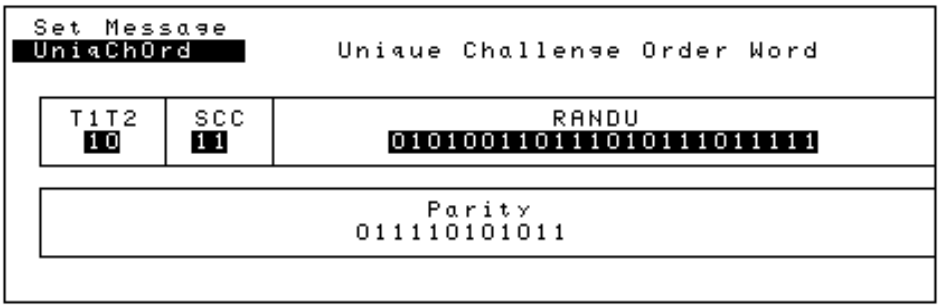

Figure 71 UniqChOrd Message Fields

T1T2

This field identifies the received message as an order confirmation, an order, or a called address message.

2 binary characters required.

SCC

SAT color code for new channel.

2 binary characters required.

RANDU

The 24 bit random number issued by the base station in the Unique Challenge Order.

24 binary characters required.

Parity

Parity field. The contents of the Parity field cannot be set by the user. The Test Set calculates the parity bits.

ManualsPlus.com

FVC SSD1 Message Fields

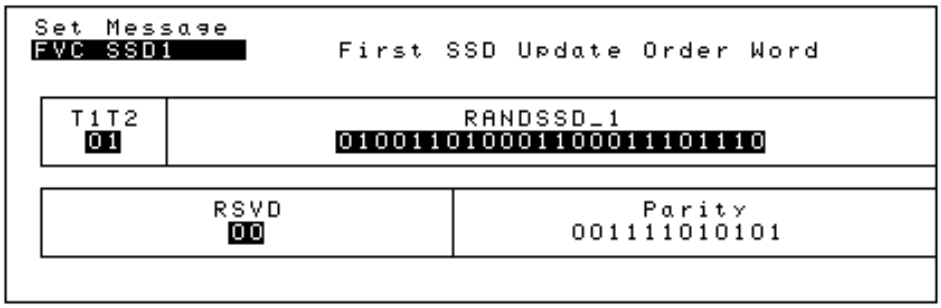

Figure 72 FVC SSD1 Message Fields

T1T2

This field identifies the received message as an order confirmation, an order, or a called address message.

2 binary characters required.

RANDSSD_1

The most significant 24-bits of the random number issued by the base station in the SSD Update Order.

24 binary characters required.

RSVD

Reserved for future use.

2 binary characters required.

Parity

Parity field. The contents of the Parity field cannot be set by the user. The Test Set calculates the parity bits.

ManualsPlus.com

FVC SSD2 Message Fields

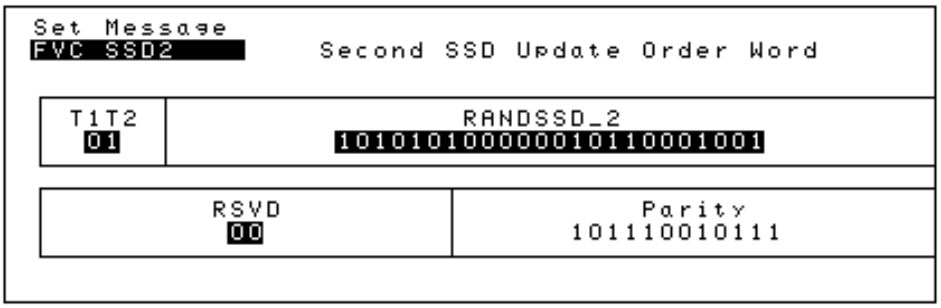

Figure 73 FVC SSD2 Message Fields

T1T2

This field identifies the received message as an order confirmation, an order, or a called address message.

2 binary characters required.

RANDSSD_2

The subsequent 24-bits (following RANSSSD_1) of the random number issued by the base station in the SSD Update Order.

24 binary characters required.

Parity

Parity field. The contents of the Parity field cannot be set by the user. The Test Set calculates the parity bits.

RSVD

Reserved for future use.

2 binary characters required.

ManualsPlus.com

FVC SSD3 Message Fields

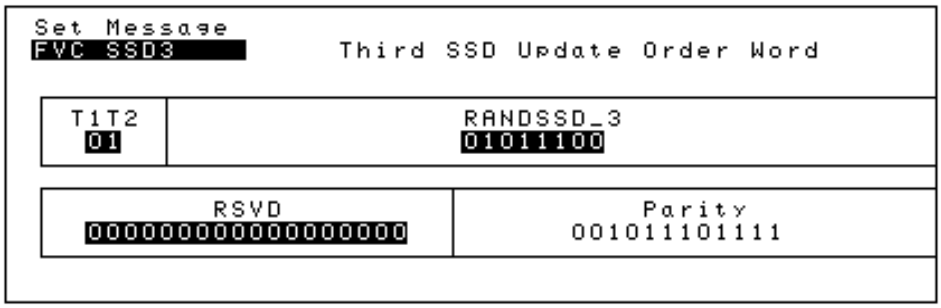

Figure 74 FVC SSD3 Message Fields

T1T2

This field identifies the received message as an order confirmation, an order, or a called address message.

2 binary characters required.

RANDSSD_3

The least significant 8-bits of the random number issued by the base station in the SSD Update Order.

8 binary characters required.

RSVD

Reserved for future use.

18 binary characters required.

Parity

Parity field. The contents of the Parity field cannot be set by the user. The Test Set calculates the parity bits.

ManualsPlus.com

FVCBSCon Message Fields

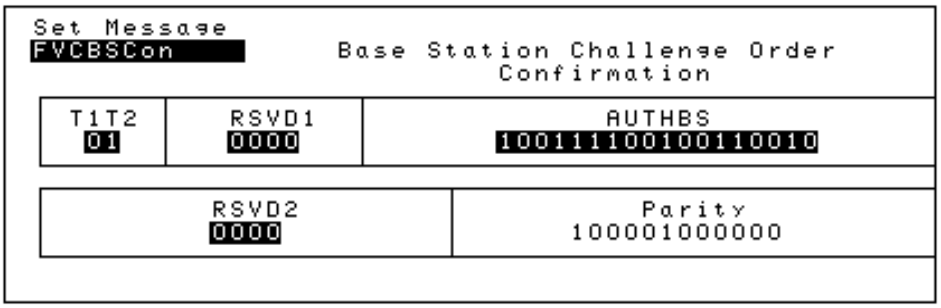

Figure 75 FVCBSCon Message Fields

T1T2

This field identifies the received message as an order confirmation, an order, or a called address message.

2 binary characters required.

RSVD1

Reserved for future use.

4 binary characters required.

AUTHBS

Output response of the authentication algorithm initiated by the Base Station Challenge order.

18 binary characters required.

RSVD2

Reserved for future use.

4 binary characters required.

Parity

Parity field. The contents of the Parity field cannot be set by the user. The Test Set calculates the parity bits.

ManualsPlus.com

FVCUniqCh Message Fields

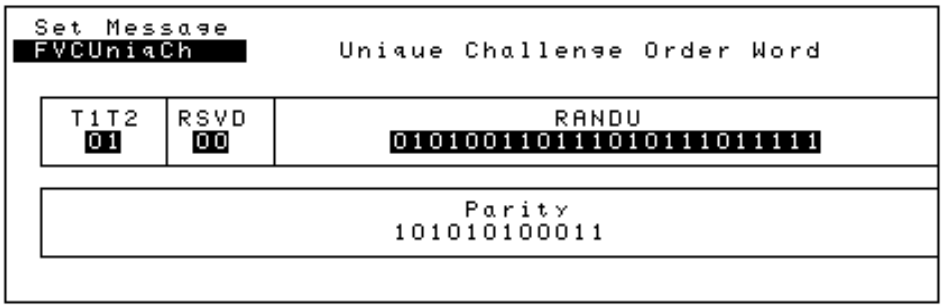

Figure 76 FVCUniqCh Message Fields

T1T2

This field identifies the received message as an order confirmation, an order, or a called address message.

2 binary characters required.

RSVD

Reserved for future use.

2 binary characters required.

RANDU

The 24 bit random number issued by the base station in the Unique Challenge Order.

24 binary characters required.

Parity

Parity field. The contents of the Parity field cannot be set by the user. The Test Set calculates the parity bits.

ManualsPlus.com

EXT PROT Message Fields

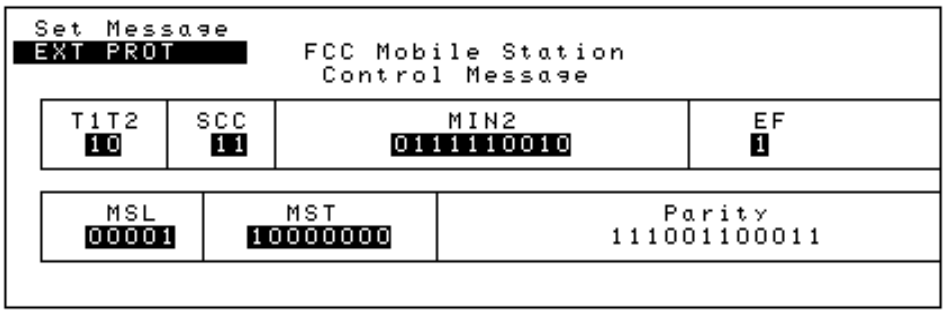

Figure 77 EXT PROT Message Fields

T1T2

This field identifies the received message as an order confirmation, an order, or a called address message.

2 binary characters required.

SCC

SAT color code for new channel.

2 binary characters required.

MIN2

Second part of the mobile identification number.

10 binary characters required.

ManualsPlus.com

EF

Extended Protocol Forward Channel Indicator.

1 binary character required.

MSL

Message Length. Extended Protocol Message Length.

5 binary characters required.

MST

Message Type. Extended Protocol Message Type.

8 binary characters required.

Parity

Parity field. The contents of the Parity field cannot be set by the user. The Test Set calculates the parity bits.

ManualsPlus.com

NCH ASN Message Fields

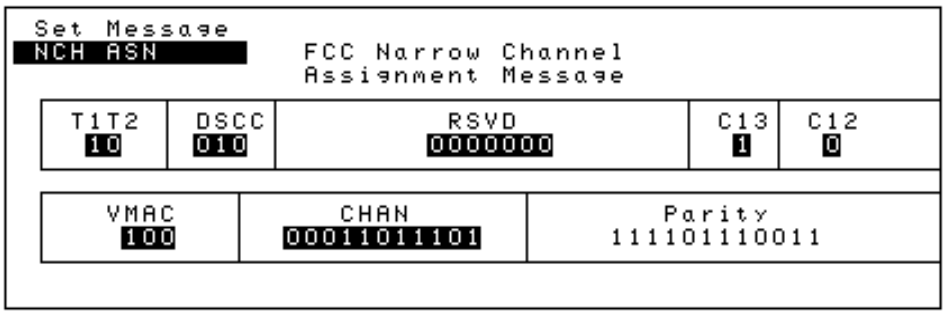

Figure 78 NCH ASN Message Fields

T1T2

This field identifies the received message as an order confirmation, an order, or a called address message.

2 binary characters required.

DSCC

DSAT color code for the new channel. Also represents SCC for handoff to a wide analog channel.

3 binary characters required.

RSVD

Reserved for future use.

7 binary characters required.

C13

Channel number bit 13 set - 10 kHz above channel number in CHAN Field.

1 binary character required.

C12

Channel number bit 12 set - 10 kHz below channel number in CHAN Field.

1 binary character required.

ManualsPlus.com

VMAC

This field displays the voice mobile attenuation code. It shows the mobile station power level associated with the designated voice channel.

3 binary characters required.

CHAN

Channel number field. Indicates the designated RF channel.

11 binary characters required.

Parity

Parity field. The contents of the Parity field cannot be set by the user. The Test Set calculates the parity bits.

ManualsPlus.com

NMS FVC Message Fields

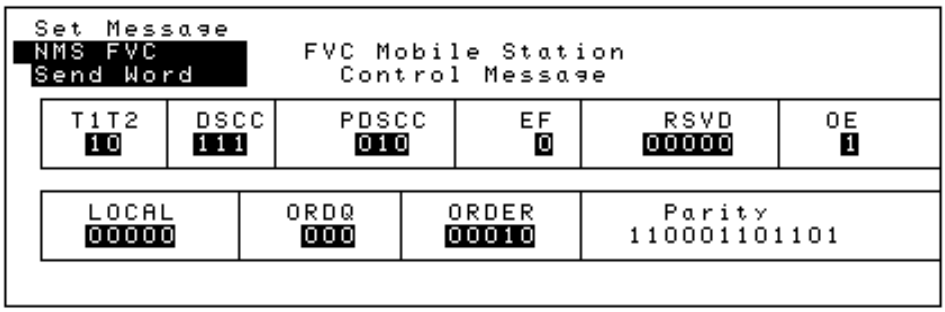

Figure 79 NMS FVC Message Fields

T1T2

This field identifies the received message as an order confirmation, an order, or a called address message.

2 binary characters required.

DSCC

DSAT color code for the new channel. Also represents SCC for handoff to a wide analog channel.

3 binary characters required.

PDSCC

Present DSAT color code. Indicates the DAST color code associated with the present channel.

3 binary characters required.

EF

Extended protocol order used for multiple word features.

1 binary character required.

RSVD

Reserved for future use.

5 binary characters required.

ManualsPlus.com

OE

The Odd/Even data field is used for adjacent channel protection.

1 binary character required.

LOCAL

This field is specific to each system. The **`Order`** field must be set to local control for this field to be interpreted.

5 binary characters required.

ORDER

This field indicates the order type.

5 binary characters required.

ORDQ

The order qualifier field qualifies the order confirmation to a specific action.

3 binary characters required.

Parity

Parity field. The contents of the Parity field cannot be set by the user. The Test Set calculates the parity bits.

ManualsPlus.com

MRI MES Message Fields

Set Message
MRI MES

MRI Parameter Message

T1T2	DSCC	PDSCC	EF	RSSI	BER	OE	BER LSB
10	111	000	0	000	00	0	00000

ORDQ	ORDER	Parity
000	10101	101110110100

Figure 80 MRI MESS Message Fields

T1T2

This field identifies the received message as an order confirmation, an order, or a called address message.

2 binary characters required.

DSCC

DSAT color code for the new channel. Also represents SCC for handoff to a wide analog channel.

3 binary characters required.

PDSCC

Present DSAT color code. Indicates the DAST color code associated with the present channel.

3 binary characters required.

EF

Extended protocol order used for multiple word features.

1 binary character required.

RSSI

Received Signal strength.

3 binary characters required.

ManualsPlus.com

BER

Most significant bits of number of allowable bit errors.

2 binary characters required.

OE

The Odd/Even data field is used for adjacent channel protection.

1 binary character required.

BER LSB

Least significant bits of number of allowable bit errors.

5 binary characters required.

ORDQ

The order qualifier field qualifies the confirmation order to a specific action.

3 binary characters required.

ORDER

This field identifies the order type.

5 binary characters required.

Parity

Parity field. The contents of the Parity field cannot be set by the user. The Test Set calculates the parity bits.

ManualsPlus.com

WNHO MESS Message Fields

Set Message
WNHO MES

Wide to Narrow Handoff Message

T1T2	SCC	PSCC	CTYP	DSCC	RSVD	C13	C12
10	00	00	1	100	00	0	1

VMAC	CHAN	Parity
100	00011010100	000011011011

Figure 81 WNHO MESS Message Fields

T1T2

This field identifies the received message as an order confirmation, an order, or a called address message.

2 binary characters required.

SCC

SAT color code for new channel.

2 binary characters required.

PSCC

Present SAT color code. Indicates the ST color code associated with the present channel.

2 binary characters required.

CTYP

Channel type indicator.

1 binary character required.

DSCC

DSAT color code for the new channel. Also represents SCC for handoff to a wide analog channel.

3 binary characters required.

ManualsPlus.com

RSVD

Reserved for future use.

2 binary characters required.

C13

Channel number bit 13 set - 10 kHz above channel number in CHAN Field.

1 binary character required.

C12

Channel number bit 12 set - 10 kHz below channel number in CHAN Field.

1 binary character required.

VMAC

This field displays the voice mobile attenuation code. It shows the mobile station power level associated with the designated voice channel.

3 binary characters required.

CHAN

Channel number field. Indicates the designated RF channel.

11 binary characters required.

Parity

Parity field. The contents of the Parity field cannot be set by the user. The Test Set calculates the parity bits.

ManualsPlus.com

NHO MES Message Fields

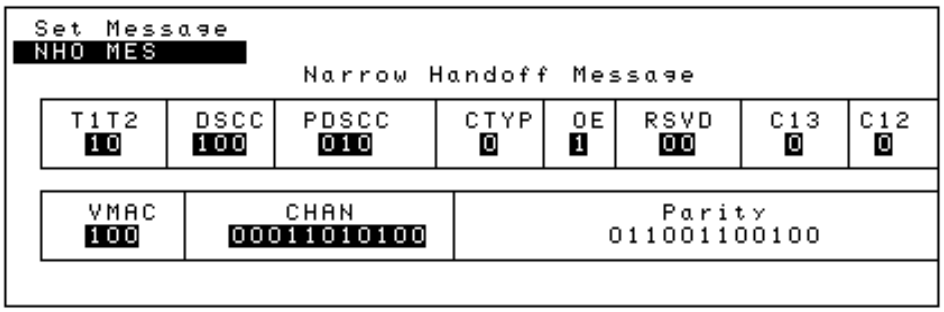

Figure 82 NHO MES Message Fields

T1T2

This field identifies the received message as an order confirmation, an order, or a called address message.

2 binary characters required.

DSCC

DSAT color code for the new channel. Also represents SCC for handoff to a wide analog channel.

3 binary characters required.

PDSCC

Present DSAT color code. Indicates the DAST color code associated with the present channel.

3 binary characters required.

CTYP

Channel type indicator.

1 binary character required.

OE

The Odd/Even data field is used for adjacent channel protection.

1 binary character required.

ManualsPlus.com

RSVD

Reserved for future use.

2 binary characters required.

C13

Channel number bit 13 set - 10 kHz above channel number in CHAN Field.

1 binary character required.

C12

Channel number bit 12 set - 10 kHz below channel number in CHAN Field.

1 binary character required.

VMAC

This field displays the voice mobile attenuation code. It shows the mobile station power level associated with the designated voice channel.

3 binary characters required.

CHAN

Channel number field. Indicates the designated RF channel.

11 binary characters required.

Parity

Parity field. The contents of the Parity field cannot be set by the user. The Test Set calculates the parity bits.

ManualsPlus.com

Programming the ANALOG MEAS Screen

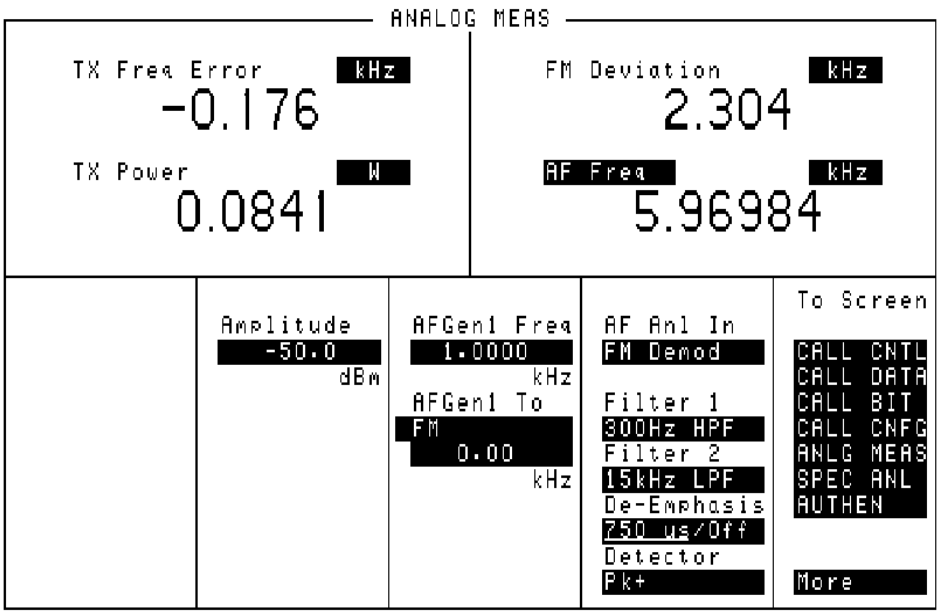

Figure 83 **The ANALOG MEAS Screen**

The **ANALOG MEAS** screen is used to make RF and audio measurements on the mobile station connected to the Test Set while on an active voice channel.

Refer to Chapter 6, “Call Processing Subsystem”, in the *Agilent Technologies 8920 User’s Guide* for detailed information on the operation and manual use of the **ANALOG MEAS** screen. The information presented in this section covers the **ANALOG MEAS** screen programming commands and how to use them.

ManualsPlus.com

Requirements for Using The ANALOG MEAS Screen

The Test Set must be in the connected state (that is, the **Connect** annunciator is lit) in order to use the ANALOG MEAS screen.

The mobile station's speaker output must be connected to the Test Set's AUDIO IN connector and the mobile station's microphone input must be connected to the Test Set's AUDIO OUT connector in order to use the ANALOG MEAS screen. Refer to **"Connecting a Mobile Station to the Test Set" on page 466** for connection information. If the mobile station does not have audio connections the ANALOG MEAS screen cannot be used.

CAUTION: The host firmware does not monitor the mobile station's transmitted carrier power while the ANALOG MEAS screen is displayed. If the power falls below 0.0005 Watts no error message is displayed nor will the Test Set terminate the call while on the ANALOG MEAS screen.

How To Program The ANALOG MEAS Screen

The ANALOG MEAS screen combines some of the Test Set's **Audio Analyzer** fields and some of the Test Set's **RF Generator** fields onto one screen for the purpose of testing the audio characteristics of the mobile station.

Only those fields which are pertinent to testing the mobile station's audio characteristics have been combined onto the **ANALOG MEAS** screen.

Since the fields on the **ANALOG MEAS** screen are imported from other screens those fields are programmed exactly as they would be on their home screen. To set up the fields, program the appropriate instrument. To make measurements use the MEASure subsystem.

AF Anl In

This field selects the input for the Audio Frequency analyzer. **See "AF Analyzer" on page 93** for programming command syntax.

AF Freq

This field is a one-of-many field used to select the type of measurement to be made by the Audio Frequency Analyzer on the audio signal being measured. **See "Measure" on page 165** for programming command syntax.

ManualsPlus.com

AFGen1 Freq

This field sets the output frequency of Audio Frequency Generator #1. **See "AF Analyzer" on page 93** for programming command syntax.

AFGen1 To

This field has two subfields:

- the upper subfield sets the destination port for Audio Frequency Generator #1
  - **FM** = RF Generator FM modulator
  - **AM** = RF Generator AM modulator
  - **Audio Out** = **AUDIO OUT** connector on front panel of Test Set
- the lower subfield sets the:
  - FM modulation deviation if upper subfield set to **FM**
  - AM modulation depth if upper subfield set to **AM**
  - amplitude of audio signal (volts RMS) at the **AUDIO OUT** connector if upper subfield set to **Audio Out**

For testing mobile stations the upper field is normally set to **FM** and the lower field set to the desired FM deviation in kHz. **See "AF Generator 1" on page 96** for programming command syntax.

Amplitude

This field sets the output power of the Test Sets's transmitter (that is, the output power of the Test Set's RF Generator). **See "RF Generator" on page 181** for programming command syntax.

De-Emphasis

This field is used to select or bypass the 750 uSec de-emphasis filter network used to condition the audio signal before being analyzed by the Audio Frequency Analyzer. **See "AF Analyzer" on page 93** for programming command syntax.

Detector

This field is used to select the type of detector used to measure the amplitude of the audio signal being analyzed by the Audio Frequency Analyzer. **See "AF Analyzer" on page 93** for programming command syntax.

ManualsPlus.com

Filter 1

This field selects one of several standard or optional audio frequency filters which can be used to condition the audio signal before being analyzed by the Audio Frequency Analyzer.**See "AF Analyzer" on page 93** for programming command syntax.

Filter 2

This field selects one of several standard or optional audio frequency filters which can be used to condition the audio signal before being analyzed by the Audio Frequency Analyzer. **See "AF Analyzer" on page 93** for programming command syntax.

FM Deviation

This field displays the measured FM deviation of the carrier being transmitted by the mobile station. Four dashes (----) indicate that no carrier is present to measure. **See "Measure" on page 165** for programming command syntax.

TX Freq Error

This field displays the frequency error (error = assigned carrier frequency - measured carrier frequency) of the carrier being transmitted by the mobile station. Four dashes (----) indicates that there is no carrier frequency present to measure. **See "Measure" on page 165** for programming command syntax.

TX Power

This field displays the measured RF power of the carrier being transmitted by the mobile station. Four dashes (----) indicates that there is no carrier present to measure. **See "Measure" on page 165** for programming command syntax.

ManualsPlus.com

Example Measurement Routines

There are a wide variety of audio measurements which can be made from the ANALOG MEAS screen.

The following examples illustrate how to make a typical mobile station receiver measurement (RF Sensitivity) and a typical mobile station transmitter measurement (FM Hum and Noise).

Refer to the *HP 8920A RF Communications Test Set Applications Handbook*, section "Testing FM Radios" for further information on using the Test Set's Audio Analyzer to make audio measurements.

Example RF Sensitivity Measurement

The following example code segment shows how to program the **`ANALOG MEAS`** screen to make an RF Sensitivity measurement. The code segment represents a HP® BASIC subprogram.

In order for this subprogram to work properly the following conditions must be true when the subroutine is called:

- Call Processing Subsystem is in the **`Connect`** state (that is, the **`Connect`** annunciator is lit)
- the mobile station's speaker output is connected to the Test Set's AUDIO IN connector
- the mobile station's microphone input must be connected to the Test Set's AUDIO OUT connector

The intended purpose of this example subprogram is to illustrate how to program the **`ANALOG MEAS`** screen. There are a variety of ways to make an RF Sensitivity measurement. The method used in this example is based upon the EIA/IS-19-B Standard (May 1988). The method and standard chosen for any particular application will depend upon the mobile station being tested.

ManualsPlus.com


```
200   SUB Meas_sinad
210  INTEGER Loop_counter
220  OUTPUT 714;"DISP CME"
230  OUTPUT 714;"AFG1:DEST 'FM';FREQ 1KHZ;FM 8KHZ;FM:STAT ON"
240  OUTPUT 714;"AFAN:INP 'AUDIO IN';DEMP 'OFF';DET 'RMS'"
250  OUTPUT 714;"AFAN:FILT1 'C MESSAGE';FILT2 '>99KHZ LP'"
260  OUTPUT 714;"MEAS:AFR:SEL 'SINAD'"
270  OUTPUT 714;"RFG:AMPL -116DBM"
280  OUTPUT 714;"TRIG:MODE:RETR SINGLE;SETT FULL"
290   Running_total=0
300   FOR Loop_counter=1 TO 5
310    OUTPUT 714;"TRIG;:MEAS:AFR:SINAD?"
320    ENTER 714;Sinad
330    Running_total=Running_total+Sinad
340   NEXT Loop_counter
350  Avg_sinad=Running_total/Loop_counter
360  PRINT USING "K,3D.2D,K";"SINAD = ";Avg_sinad;" dB at -116 dBm."
370  OUTPUT 714;"TRIG:MODE:RETR REP;SETT FULL"
380  OUTPUT 714;"RFG:AMPL -47DBM;:DISP ACNT"
390  SUBEND
```

ManualsPlus.com

Example FM Hum & Noise Measurement

The following example code segment shows how to program the **ANALOG MEAS** screen to make an FM Hum & Noise measurement. The code segment represents a HP® BASIC subprogram.

In order for this subprogram to work properly the following conditions must be true when the subroutine is called:

- Call Processing Subsystem is in the **Connect** state (that is, the **Connect** annunciator is lit)
- the mobile station's speaker output is connected to the Test Set's AUDIO IN connector
- the mobile station's microphone input must be connected to the Test Set's AUDIO OUT connector

The intended purpose of this example subprogram is to illustrate how to program the **ANALOG MEAS** screen. There are a variety of ways to make an FM Hum & Noise measurement. The method used in this example is based upon the EIA/IS-19-B Standard (May 1988). The method and standard chosen for any particular application will depend upon the mobile station being tested.

```
200  SUB Meas_hum_noise
210  OUTPUT 714;"DISP CME"
220  OUTPUT 714;"AFG1:DEST 'AUDIO OUT';FREQ 1KHZ;OUTP:INCR .01V"
230  OUTPUT 714;"AFG1:OUTP 50 MV"
240  OUTPUT 714;"AFAN:INP 'FM DEMOD';DEMP '750 US';DET 'PK+'"
250  OUTPUT 714;"AFAN:FILT1 'C MESSAGE';FILT2 '>99KHZ LP'"
260  OUTPUT 714;"MEAS:AFR:SEL 'AF FREQ'"
270  OUTPUT 714;"RFG:AMPL -47DBM"
280  OUTPUT 714;"TRIG:MODE:RETR SINGLE;SETT FULL"
290   REPEAT
300    OUTPUT 714;"TRIG;:MEAS:AFR:FM?"
310    ENTER 714;Deviation
320    IF Deviation>8300 THEN OUTPUT 714;"AFG1:OUTPut:INCR DOWN"
330    IF Deviation<7700 THEN OUTPUT 714;"AFG1:OUTPut:INCR UP"
340   UNTIL Deviation>=7700 AND Deviation<=8300
350  OUTPUT 714;"AFAN:DET 'RMS'"
360  OUTPUT 714;"TRIG;:MEAS:AFR:FM?"
370  ENTER 714;Deviation
380  OUTPUT 714;"MEAS:AFR:FM:REF:STAT ON;VAL
        "&VAL$(Deviation)&"HZ"
390  OUTPUT 714;"AFG1:OUTPut:STAT OFF"
400  OUTPUT 714;"TRIG;:MEAS:AFR:FM?"
410  ENTER 714;Deviation
420  PRINT USING "K,3D.2D,K";"FM Hum and Noise = ";Deviation;" dB."
430  OUTPUT 714;"TRIG:MODE:RETR REP;SETT FULL"
440  OUTPUT 714;"MEAS:AFR:FM:REF:STAT OFF"
450  SUBEND
```

ManualsPlus.com

Programming the CALL CONFIGURE Screen

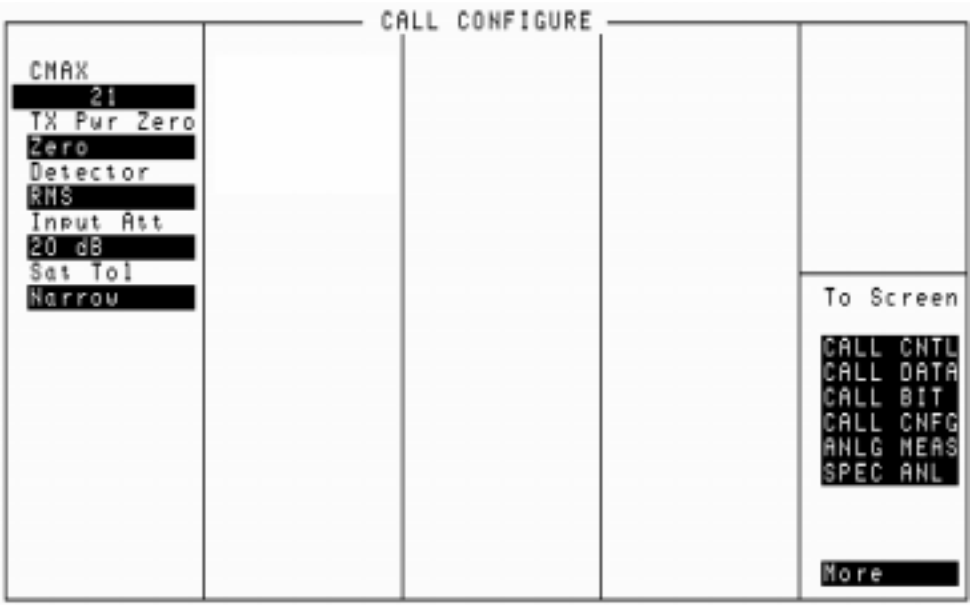

Figure 84 **The CALL CONFIGURE Screen**

This screen is used to set some of the less commonly used Test Set configuration parameters.

When the CALL CONFIGURE screen is displayed and the Call Processing Subsystem is in the **`Connect`** state, the host firmware constantly monitors the mobile station's transmitted carrier power. If the power falls below 0.0005Watts the error message **`RF Power Loss indicates loss of Voice Channel`** will be displayed and the Test Set will terminate the call and return to the **`Active`** state.

ManualsPlus.com

NOTE: In order to ensure that the host firmware makes the correct decisions regarding the presence of the mobile stations's RF carrier, the Test Set's RF power meter should be zeroed before using the Call Processing Subsystem. Failure to zero the power meter can result in erroneous RF power measurements. See **"Conditioning the Test Set for Call Processing" on page 469** for information on zeroing the RF Power meter manually.

Refer to "Using the Analog Call Processing Subsystem" in the *Application Guide* for operating information on the use of the **CALL CONFIGURE** screen.

Refer to Chapter 6, "Call Processing Subsystem", in the *HP 8920 User's Guide* for detailed information on the operation and manual use of the **CALL CONFIGURE** screen.

The information presented in this section covers the **CALL CONFIGURE** screen programming commands and how to use them.

CMAX

The **CMAX** field sets the number of access channels in the system. This will determine how many channels must be scanned by the mobile station when trying to access the Test Set. The value of this field will affect the time required for the mobile station to connect with the Test Set.

The :CMAXimum command is used to control this field.

The **CMAX** field is an immediate action field. That is, whenever the :CMAXimum command is sent, the change is reflected immediately in the appropriate signaling message(s) being sent on the forward control channel. No change occurs to the current state (i.e. Active, Register, Page, Access, Connect) of the Call Processing Subsystem.

The query form of the command (that is, :CMAXimum?) can be used to determine the current control channel setting.

Syntax

```
:CMAXimum <integer number>
:CMAXimum?
```

Example

```
OUTPUT 714;"CALLP:CMAX 21"
OUTPUT 714;"CALLP:CMAX?"
ENTER 714;Num_acc_chans
```

ManualsPlus.com

Detector

This field is used to select the type of detector used to measure the amplitude of the audio signal being analyzed on the **ANALOG MEAS** screen. The **Detector** field is imported from the **AF ANALYZER** screen and is programmed exactly as it is on its home screen. **See "AF Analyzer" on page 93** for programming command syntax.

Input Att

The Input Att field sets the amount of input attenuation for signals entering the RF IN/OUT and ANT IN connectors. The Input Att field displays the present attenuation value, and when selected, is used to set the desired attenuation level.

The :CRFAttenuator command is used to control this field.

The query form (that is, :CRFAttenuator?) can be used to query the current field value.

Syntax

```
:CRFAttenuator <'><0 dB/20 dB/40 dB><'>
:CRFAttenuator?
```

Example

```
OUTPUT 714;"CALLP:AMPS:CRFA '40 dB'"
OUTPUT 714;"CALLP:AMPS:CRFA?"
ENTER 714;Attenuator_set$
```

Operating Considerations

This is a priority control field. Accessing the CALL CONFIGURE screen overrides any changes made to this field in other screens. The other screens affected include the RF ANALYZER screen and the SPECTRUM ANALYZER screen.

ManualsPlus.com

Sat Tol

This field is used to select the Sat tolerance. When set to Narrow the Sat limit is one of the three valid Sat tones ± 10Hz. When set to Wide the Sat limit is defined at 0 to 7000 Hz. When operating in noisy environments the narrow Sat limit may not allow for correct measurements and the ability to alter the limit to encompass a wider range provides for testing flexibility.

The :STOLerance command is used to control this field.

The query form (that is, :STOLerance?) can be used to query the current field value.

Syntax

```
:STOLerance <'><NARROW/WIDE><'>
:STOLerance?
```

Example

```
OUTPUT 714;"CALLP:AMPS:STOL 'NARROW'"
OUTPUT 714;"CALLP:AMPS:STOL?"
ENTER 714;Stol_set$
```

TX Pwr Zero

The **TX Pwr Zero** function establishes a 0.0000 W reference for measuring RF power at the RF IN/OUT port. The **TX Pwr Zero** field is imported from the **RF ANALYZER** screen and is programmed exactly as it is on its home screen. **See "RF Analyzer" on page 179** for programming command syntax.

CAUTION: RF power must not be applied while zeroing the power meter.

ManualsPlus.com

Example Programs

This section contains two example programs for controlling the Call Processing Subsystem. The SRQ Example Program demonstrates how to control program flow using the service request feature of the HP-IB. The Polling Example Program demonstrates how to control program flow by polling the Test Set's status registers.

The programs can be run on an external controller or on the Test Set's built-in IBASIC Controller. If the programs are run on the Test Set's built-in IBASIC Controller bus addresses and time-out values must be changed as noted in the programs.

Both example programs have the same basic structure and execute as follows:

Start
Initialize program variables
Configure the Test Set's status registers for service request or polling
Condition the Test Set for Call Processing
Configure the Test Set
Set the Active state
Register the mobile station and print the registration data
Page the mobile station
Measure several parameters of the mobile station's carrier and print results
Order the mobile station to change power and print the mobile station order verification
Configure the Test Set for a handoff
Handoff the mobile station to a new channel
Put the mobile station into the maintenance mode
Send an alert order to the mobile station to take it out of maintenance mode
Release the mobile station
Prompt the operator to originate a call from the mobile station
Print the origination data from the mobile station
Release the mobile station
End

ManualsPlus.com

The program traps any errors which may occur while executing. If an error is detected, the error data is printed and the program stops. In a ‘real world’ environment the control program would have to make some flow decision based upon the nature of the error.

Following each program is a Comments section which contains relevant comments regarding individual program lines.

The example program uses function calls to set the various call processing states and to send orders to the mobile station. Function calls are not the only programming construct which can be used to control the Call Processing Subsystem. The example programs were designed to illustrate how to use the Call Processing Subsystem in a simple, straightforward manner. The program structure and program constructs used in your application will depend upon the programming language used and the requirements of your application.

ManualsPlus.com

SRQ Example Program

```
10    ! SRQ_sample program
20    OPTION BASE 1
30    COM /Io_addresses/ INTEGER Inst_addr,Bus_addr
40    COM /Prog_control/ INTEGER Oper_complete,Wait_time,Error_flag
50    !
60    Bus_addr=7      ! Set to 8 when running on 8920
70    Inst_addr=714   ! Set to 814 when running on 8920
80    Wait_time=0     ! Set to minimum of .5 when running on an 8920
90    Oper_complete=0 ! 1 = Operation complete  0 = Operation not complete
100   Error_flag=0    ! 1 = An error has occurred 0 = no error has occurred
110   ABORT Bus_addr
120   CLEAR SCREEN
130   PRINTER IS CRT
140   Cnfg_srvc_intrp
150   ON INTR Bus_addr,15 CALL Srvice_interupt
160   ENABLE INTR Bus_addr;2
170   !
180 Start_test:!
190   Cond_test_set
200   OUTPUT Inst_addr;"DISP ACNT"
210   IF NOT FNCnfg_base_sta(0,212,231,5970,-47,"AMPS",321) THEN Print_error
220   IF FNSet_state("Register") THEN
230     Read_rcdd_data("1234")! Pass the numbers of the RCDD fields to be read.
240   ELSE
250     Print_error
260   END IF
270   IF NOT FNSet_state("Page") THEN CALL Print_error
280   Meas_carrier
290   IF FNOrder("Power",7) THEN
300     Read_rcdd_data("1")
310   ELSE
320     Print_error
330   END IF
340   OUTPUT Inst_addr;"CALLP:VCH 211;VMAC 4;SAT ’5970HZ’"
350   IF NOT FNSet_state("Handoff") THEN CALL Print_error
360   Meas_sinad
370   IF NOT FNOrder("Mainten",0) THEN CALL Print_error !0 = dummy variable
380   IF FNOrder("Alert",0) THEN ! 0 = dummy variable to satisfy parm list
381     BEEP
390     INPUT "Did the phone ALERT? (Y/N)",Yes_no$
400     IF Yes_no$[1,1]="N" OR Yes_no$[1,1]="n" THEN
410       PRINT "Phone failed to ALERT."
420       STOP
430     END IF
440   ELSE
450     Print_error
460   END IF
470   IF NOT FNSet_state("Release") THEN CALL Print_error
```

ManualsPlus.com


```
480   BEEP
490   DISP "Originate a call from the mobile station."
500   IF FNSet_state("Originate") THEN
510     DISP ""
520     Read_rcdd_data("12345")
530   ELSE
540     Print_error
550   END IF
560   IF NOT FNSet_state("Release") THEN CALL Print_error
570   PRINT "Program completed."
580   END
590   !
1000 Cond_test_set: SUB Cond_test_set
1010    COM /Io_addresses/ INTEGER Inst_addr,Bus_addr
1020    !*************************************************************
1030    ! Prompt operator to make sure that no RF power is applied to the
1040    ! RF IN/OUT port when the power meter is zeroed.
1050    !*************************************************************
1060    BEEP
1070    DISP "Remove all input power to the test set, then press Continue"
1080    PAUSE
1090    OUTPUT Inst_addr;"DISP RFAN;:RFAN:PME:ZERO"
1100    BEEP
1110    DISP "Reconnect all cables, then press Continue."
1120    PAUSE
1130    OUTPUT Inst_addr;"DISP CONF;:CONF:NOTC 'AFGEN1'"
1140  SUBEND
1150  !
2000 Cnfg_srvc_intrp: SUB Cnfg_srvc_intrp
2010    COM /Io_addresses/ INTEGER Inst_addr,Bus_addr
2020    OUTPUT Inst_addr;"*RST;*CLS;*ESE 60;*SRE 160"
2030    OUTPUT Inst_addr;"STAT:CALLP:PTR 0;NTR 0"
2040    OUTPUT Inst_addr;"STAT:CALLP:ENAB 63;:STAT:OPER:ENA 512;*OPC?"
2050    ON TIMEOUT Bus_addr,10 GOTO Cnfg_failed
2060    ENTER Inst_addr;Cnfg_complete
2070    OFF TIMEOUT Bus_addr
2080    SUBEXIT
2090 Cnfg_failed: BEEP
2100    PRINT "Cnfg_srvc_intrp SUB timed out on *OPC? query."
2110    STOP
2120  SUBEND
2130  !
3000 Srvice_interupt: SUB Srvice_interupt
3010    COM /Io_addresses/ INTEGER Inst_addr,Bus_addr
3020    COM /Prog_control/ INTEGER Oper_complete,Wait_time,Error_flag
3030    INTEGER Std_event,Status_byte,Call_proc_event,Oper_event
3040    Status_byte=SPOLL(Inst_addr)
3050    IF BIT(Status_byte,5) THEN  ! Check for error conditions first
3060      Error_flag=1
3070      SUBEXIT !Dont re-enable interrupts until current errors processed.
```

ManualsPlus.com


```
3080     ELSE
3090       Error_flag=0
3100     END IF
3110     IF BINAND(Status_byte,31) THEN
3120       BEEP
3130       PRINT "Error in SRQ process. Status Byte = ";Status_byte
3140       STOP
3150     END IF
3160     IF BIT(Status_byte,7) THEN ! Check for call processing state
3170       OUTPUT Inst_addr;"STAT:OPER:EVEN?;:STAT:CALLP:EVEN?"
3180       ENTER Inst_addr;Oper_event,Call_proc_event
3190       Oper_complete=1
3200     END IF
3210     ENABLE INTR Bus_addr;2
3220   SUBEND
3230   !
5000 Cnfg_base_sta:DEF FNCnfg_base_sta(Vmac,Vch,Sid,Sat,REAL Ampl,Sys$,INTEGER Cch)
5010    COM /Io_addresses/ INTEGER Inst_addr,Bus_addr
5020    COM /Prog_control/ INTEGER Oper_complete,Wait_time,Error_flag
5030    OUTPUT Inst_addr;"CALLP:AMPL "&VAL$(Ampl)&" DBM;SID "&VAL$(Sid)
5040    OUTPUT Inst_addr;"CALLP:VCH "&VAL$(Vch)
5050    OUTPUT Inst_addr;"CALLP:SAT '"&VAL$(Sat)&"HZ"&"';VMAC "&VAL$(Vmac)
5060    OUTPUT Inst_addr;"STAT:CALLP:PTR 1;:CALLP:CCH "&VAL$(Cch)
5070    GOSUB Wait_loop
5080    IF Error_flag THEN RETURN 0
5090    Oper_complete=0
5100    Error_flag=0
5110    OUTPUT Inst_addr;"CALLP:CSYS '"&Sys$&"'"
5120    GOSUB Wait_loop
5130    IF Error_flag THEN
5140      RETURN 0
5150    ELSE
5160      RETURN 1
5170    END IF
5180 Wait_loop: LOOP
5190      WAIT Wait_time
5200    EXIT IF Oper_complete OR Error_flag
5210    END LOOP
5220    RETURN
5230  FNEND
5240   !
6000 Set_state: DEF FNSet_state(State$)
6010    COM /Io_addresses/ INTEGER Inst_addr,Bus_addr
6020    COM /Prog_control/ INTEGER Oper_complete,Wait_time,Error_flag
6030    INTEGER Ptr_value
6040    Oper_complete=0 !Initialize to zero at start of any state change
6050    Error_flag=0    !Initialize to zero at start of any state change
6060    SELECT State$
6070    CASE "Active"
6080      Ptr_value=1
```

ManualsPlus.com


```
6090    CASE "Register"
6100      Ptr_value=1
6110    CASE "Page"
6120      Ptr_value=32
6130    CASE "Handoff"
6140      Ptr_value=32
6150    CASE "Originate"
6160      Ptr_value=32
6170    CASE "Release"
6180      Ptr_value=1
6190    END SELECT
6200    PRINT "Sending the "&State$&" command."
6210 IF State$="Originate" THEN
6220  OUTPUT Inst_addr;"STAT:CALLP:PTR "&VAL$(Ptr_value)
6230 ELSE
6240   OUTPUT Inst_addr;"STAT:CALLP:PTR "&VAL$(Ptr_value)&";:CALLP:&State$
6250 END IF
6260    LOOP
6270      DISP "Waiting for an interrupt."
6280      WAIT Wait_time
6290    EXIT IF Oper_complete OR Error_flag
6300    END LOOP
6400    DISP
6410    IF Error_flag THEN
6420      RETURN 0
6430    ELSE
6440      RETURN 1
6450    END IF
6460  FNEND
6470  !
7000 Order: DEF FNOrder(Order$,INTEGER Parm)
7010    COM /Io_addresses/ INTEGER Inst_addr,Bus_addr
7020    COM /Prog_control/ INTEGER Oper_complete,Wait_time,Error_flag
7030    Oper_complete=0 !Initialize to zero at start of any order to mobile
7040    Error_flag=0    !Initialize to zero at start of any order to mobile
7050    SELECT Order$
7060    CASE "Power"
7070      OUTPUT Inst_addr;"STAT:CALLP:PTR 32"
7080      OUTPUT Inst_addr;"CALLP:ORD 'CHNG PL "&VAL$(Parm)&"'"
7090    CASE "Mainten"
7100      BEEP
7110      OUTPUT Inst_addr;"STAT:CALLP:PTR 16;:CALLP:ORD 'MAINTEN'"
7120    CASE "Alert"
7130      BEEP
7140      OUTPUT Inst_addr;"STAT:CALLP:PTR 32;:CALLP:ORD 'ALERT'"
7150    END SELECT
7160    LOOP
7170      WAIT Wait_time
7180    EXIT IF Oper_complete OR Error_flag
7190    END LOOP
```

ManualsPlus.com


```
7200    IF Error_flag THEN
7210      RETURN 0
7220    ELSE
7230      RETURN 1
7240    END IF
7250  FNEND
7260  !
8000 Print_error: SUB Print_error
8010    OPTION BASE 1
8020    COM /Io_addresses/ INTEGER Inst_addr,Bus_addr
8030    COM /Prog_control/ INTEGER Oper_complete,Wait_time,Error_flag
8040    DIM Error_message$[255],Error$(5)[20]
8050    INTEGER Std_event,N
8060    Error$(2)="Query"
8070    Error$(3)="Device Dependent"
8080    Error$(4)="Execution"
8090    Error$(5)="Command"
8100    OUTPUT Inst_addr;"*ESR?"
8110    ENTER Inst_addr;Std_event
8120    FOR N=2 TO 5
8130      IF BIT(Std_event,N) THEN
8140        PRINT "A "&Error$(N)&" error has occurred."
8150        OUTPUT Inst_addr;"SYSTem:ERRor?"
8160        ENTER Inst_addr;Error_number,Error_message$
8170        PRINT Error_number,Error_message$
8180      END IF
8190    NEXT N
8200    IF BINAND(Std_event,195) THEN
8210      BEEP
8220      PRINT "Unrecognized condition. Standard Event register = ";Std_event
8230    END IF
8240    STOP
8250  SUBEND
8260  !
10000 Read_rcdd_data: SUB Read_rcdd_data(Fields$)
10010   OPTION BASE 1
10020   COM /Io_addresses/ INTEGER Inst_addr,Bus_addr
10030   DIM Rcdd$(6)[40]
10040   INTEGER N
10050   WAIT .1 !Allow time for RCDD data fields to be updated.
10060   FOR N=1 TO LEN(TRIM$(Fields$))
10070     OUTPUT Inst_addr;"CALLP:RCDD"&Fields$[N,N]&"?"
10080     ENTER Inst_addr;Rcdd$(N)
10090     PRINT "RCDD"&VAL$(N)&" = "&Rcdd$(N)
10100   NEXT N
10110 SUBEND
10120 !
11000 Meas_carrier: SUB Meas_carrier
11010  COM /Io_addresses/ INTEGER Inst_addr,Bus_addr
11015  ON TIMEOUT Bus_addr,5 RECOVER Timed_out
```

ManualsPlus.com


```
11020  OUTPUT Inst_addr;"DISP ACNT;:CALLP:MOD 'MEAS';:MEAS:RFR:POW?;FREQ:ERR?"
11030   ENTER Inst_addr;Power,Freq_error
11040   OUTPUT Inst_addr;"MEAS:AFR:FREQ?;FM?"
11050   ENTER Inst_addr;Audiofreq,Deviation
11060   PRINT USING "K,2D.3D,K";"Carrier Power = ";Power;" Watts"
11070   PRINT USING "K,2D.3D,K";"Audio Frequency = ";Audiofreq/1000;" kHz"
11080   PRINT USING "K,2D.3D,K";"FM Deviation = ";Deviation/1000;" kHz"
11090   PRINT USING "K,2D.3D,K";"Carrier Freq Error = ";Freq_error/1000;" kHz"
11100 SUBEXIT
11110 Timed_out:!
11120  ON TIMEOUT Bus_addr,5 GOTO Cannot_recover
11130  CLEAR Inst_addr
11140  OUTPUT Inst_addr;"trig:abort;mode:retr:rep"
11150  DISP "you should have the box back."
11160  ENABLE
11170 Cannot_recover:!
11180  DISP "Cannot regain control of the Test Set."
11190  STOP
11200 SUBEND
11210 !
12000 Meas_sinad: SUB Meas_sinad
12010    COM /Io_addresses/ INTEGER Inst_addr,Bus_addr
12020   INTEGER N
12025 ON TIMEOUT 7,5 RECOVER Timed_out
12030 OUTPUT Inst_addr;"DISP CME;:AFG1:DEST 'FM';FREQ 1KHZ FM 8KHZ;FM:STAT ON"
12040   OUTPUT Inst_addr;"AFAN:INP 'AUDIO IN';DEMP 'OFF';DET 'RMS'"
12050   OUTPUT Inst_addr;"AFAN:FILT1 'C MESSAGE';FILT2 '>99KHZ LP'"
12060   OUTPUT Inst_addr;"MEAS:AFR:SEL 'SINAD';:RFG:AMPL -113DBM"
12070   OUTPUT Inst_addr;"TRIG:MODE:RETR SINGLE;SETT FULL"
12080   Avg_sinad=0
12090   FOR N=1 TO 5
12100     OUTPUT Inst_addr;"TRIG;:MEAS:AFR:SINAD?"
12110     ENTER Inst_addr;Sinad
12120     Avg_sinad=Avg_sinad+Sinad
12130   NEXT N
12140   PRINT USING "K,3D.2D,K";"SINAD = ";Avg_sinad/N;" dB at -116 dBm."
12150   OUTPUT Inst_addr;"TRIG:MODE:RETR REP;SETT FULL"
12160   OUTPUT Inst_addr;"RFG:AMPL -30DBM;:DISP ACNT"
12165 SUBEXIT
12170 Timed_out:!
12180 ON TIMEOUT Bus_addr,Time_out_value RECOVER Cannot_recover
12190   OUTPUT Inst_addr;"trig:abort;mode:retr:rep"
12200 ENABLE
12210   DISP "you should have the box back."
12220 SUBEXIT
12230 Cannot_recover:!
12240 DISP "Cannot regain control of Test Set."
12250 STOP
12260 SUBEND
```

ManualsPlus.com

Comments for SRQ Example Program

Table 55 Comments For SRQ Example Program

Program Line Number	Comment
80	When running on an external controller no wait is required. When running on the Test Set's internal IBASIC controller a wait is required. The loops have a WAIT statement included so that only this line need be changed when running on the Test Set's internal IBASIC controller.
230	The number of the received data field(s) to be read is passed to the Read_rcdd_data subprogram as string data. In this example fields 1, 2 and 3 will be read. The order in which the field numbers are passed dictates the order in which they are printed.
370,380	A dummy variable is required to satisfy the FNOrder function passed parameter list. This is necessary because IBASIC does not support the OPTIONAL keyword in function and subprogram passed parameter lists.
2020	Reset the Test Set: *RST Clear the status reporting system: *CLS Set up the desired interrupt conditions in the Test Set: * Standard Event Status Register Group Event register conditions which will set the Summary Message TRUE if they occur: Bit 5: Command Error decimal value = 2^5 = 32 Bit 4: Execution Error decimal value = 2^4 = 16 Bit 3: Device Dependent Error decimal value = 2^3 = 8 Bit 2: Query Error decimal value = 2^2 = 4 32+16+8+4 = 60 Therefore set the Standard Event Enable Register to a value of 60: *ESE 60 * Set the correct Summary Message bit(s) in the Service Request Enable Register to generate a Service Request (SRQ) if the Summary Message(s) become TRUE. Bit 7 = Operation Status Register Group Summary Message decimal value = 2^7 = 128 Bit 5 = Standard Event Status Register Summary Message decimal value = 2^5 = 32 128+32 = 160 Therefore set the Service Request Enable Register to a value of 160: *SRE 160
2030	Preset the transition filters to pass no transitions. The filters will be set by the functions FNSet_state and FNOrder. The functions will set the proper filter values to pass the desired transition.

ManualsPlus.com

Table 55 Comments For SRQ Example Program (Continued)

Program Line Number	Comment
2040	* Call Processing Status Register Group Condition register conditions which will set the Summary Message TRUE if they occur: Bit 5: Connect LED lit decimal value = 2^5 = 32 Bit 4: Access LED lit decimal value = 2^4 = 16 Bit 3: Page LED lit decimal value = 2^3 = 8 Bit 2: Unused in Test Set decimal value = 2^2 = 4 Bit 1: Register LED lit decimal value = 2^1 = 2 Bit 0: Active LED lit decimal value = 2^0 = 1 32+16+8+4+2+1 = 63 Therefore set the Call Processing Enable Register to 63: STAT:CALLP:ENAB 63 * The Call Processing Status Register Group Summary Message is passed to the Status Byte Register through Bit 9 in the Operational Status Register Group Condition Register. The Operational Status Register Group must be configured to set its Summary Message TRUE if the Summary Message from the Call Processing Status Register Group is TRUE. Therefore Bit 9 (2^9=512) in the Operational Status Register Group Enable Register must be set HIGH: STAT:OPER:ENAB 512 * The Test Set's HP-IB interface has a large input buffer and can handshake in several commands. The commands are processed serially out of the input buffer. In this example program the Cnfg_srvc_intrp sends 8 commands to the Test Set in rapid succession. The *RST command requires several seconds to execute. Since the Test Set can handshake in many commands it can appear to the control program that the Test Set has executed all of the commands sent, when in reality they have only been placed in the input buffer. To prevent the control program from getting ahead of the Test Set the *OPC? query command is used to synchronize the Test Set and the control program.
3000	The Srvice_interupt subprogram first checks for errors. If an error is detected from one of the enabled registers the Error_flag is set and the subprogram is exited. If an error is detected from a non-enabled register the program stops. If no errors are detected then the Call Processing registers are queried to clear them to allow further interrupts and the operation complete bit is set. In a 'real world' situation the Srvice_interupt subprogram should take some action if the Call Processing subsystem did not generate the interrupt (if the command IF BIT(Status_byte,7) was not true). This branch is left out of the example subprogram to minimize the number of program lines. As written, the subprogram assumes that the interrupt was caused by the desired call processing activity completing successfully.
6080	Ptr_value is the value that the positive transition filter will be set to. The value is determined by which pseudo-LED will light when the desired command is completed. For example, a successful PAGE is indicated by the Connect pseudo-LED lighting. Therefore the Ptr_value is set to 32 (2^5) for the Page command.

ManualsPlus.com

Polling Example Program

```
10    OPTION BASE 1
20    COM /Io_addresses/ INTEGER Inst_addr,Bus_addr
30    COM /Prog_control/ INTEGER Std_event,Wait_time
40    !
50    Bus_addr=7    ! Set to 8 when running on 8920
60    Inst_addr=714 ! Set to 814 when running on 8920
70    Wait_time=.5  ! Set to minimum of .5 when running on an 8920
80    ABORT Bus_addr
90    CLEAR SCREEN
100   PRINTER IS CRT
110   Cnfg_stat_reg
120   !
130 Start_test:!
140   Cond_test_set
150   OUTPUT Inst_addr;"DISP ACNT"
160 IF NOT FNCnfg_base_sta(333,0,212,231,5970, -47,"AMPS") THEN CALL Print_error
180   IF FNSet_state("Register") THEN
190     Read_rcdd_data("1234")! Pass the numbers of the RCDD fields to be read.
200   ELSE
210     Print_error
220   END IF
230   IF NOT FNSet_state("Page") THEN CALL Print_error
240   Meas_carrier
250   IF FNOrder("Power",7) THEN
260     Read_rcdd_data("1")
270   ELSE
280     Print_error
290   END IF
300   OUTPUT Inst_addr;"CALLP:VCH 211;VMAC 4;SAT '5970HZ'"
310   IF NOT FNSet_state("Handoff") THEN CALL Print_error
320   Meas_sinad
330   IF NOT FNOrder("Mainten",0) THEN CALL Print_error !0 = dummy variable
340   IF FNOrder("Alert",0) THEN ! 0 = dummy variable to satisfy parm list
350     INPUT "Did the phone ALERT? (Y/N)",Yes_no$
360     IF Yes_no$[1,1]="N" OR Yes_no$[1,1]="n" THEN
370       PRINT "Phone failed to ALERT."
380       STOP
390     END IF
400   ELSE
410     Print_error
420   END IF
430   IF NOT FNSet_state("Release") THEN CALL Print_error
440   BEEP
450   DISP "Originate a call from the mobile station."
460   IF FNSet_state("Originate") THEN
470     DISP ""
480     Read_rcdd_data("12345")
490   ELSE
```

ManualsPlus.com


```
500     Print_error
510   END IF
520   IF NOT FNSet_state("Release") THEN CALL Print_error
530   PRINT "Program completed."
540   END
1000 Cnfg_stat_reg: SUB Cnfg_stat_reg
1010    COM /Io_addresses/ INTEGER Inst_addr,Bus_addr
1020    OUTPUT Inst_addr;"*RST;*CLS;*SRE 0;STAT:CALLP:PTR 0;NTR 0;*OPC?"
1030    ON TIMEOUT Bus_addr,10 GOTO Cnfg_failed
1040    ENTER Inst_addr;Cnfg_complete
1050    OFF TIMEOUT Bus_addr
1060    SUBEXIT
1070 Cnfg_failed: BEEP
1080    PRINT "Cnfg_stat_reg SUB timed out on *OPC? query."
1090    STOP
1100  SUBEND
1110  !
2000 Cond_test_set: SUB Cond_test_set
2010    COM /Io_addresses/ INTEGER Inst_addr,Bus_addr
2020 !*********************************************************************
2030 ! Prompt operator to make sure that no RF power is applied to the
2040    ! RF IN/OUT port when the power meter is zeroed.
2050 !*********************************************************************
2060    OUTPUT Inst_addr;"DISP RFAN;:RFAN:PME:ZERO"
2070    OUTPUT Inst_addr;"DISP CONF;:CONF:NOTC 'AFGEN1'"
2080  SUBEND
2090  !
3000 Cnfg_base_sta: DEF FNCnfg_base_sta(INTEGER Cch,Vmac,Vch,Sid,Sat,REAL Ampl,Sys$)
3010    COM /Io_addresses/ INTEGER Inst_addr,Bus_addr
3020    COM /Prog_control/ INTEGER Wait_time,Oper_complete
3021    INTEGER Ptr_value,Call_proc_even
3030    OUTPUT Inst_addr;"CALLP:AMPL "&VAL$(Ampl)&" DBM;SID "&VAL$(Sid)
3040    OUTPUT Inst_addr;"CALLP:VCH "&VAL$(Vch)
3050    OUTPUT Inst_addr;"CALLP:SAT '"&VAL$(Sat)&"HZ"&"';VMAC "&VAL$(Vmac)
3060    OUTPUT Inst_addr;"STAT:CALLP:PTR 1;:CALLP:CCH "&VAL$(Cch)
3070    GOSUB Wait_loop
3100    OUTPUT Inst_addr;"CALLP:CSYS '"&Sys$&"'"
3110    GOSUB Wait_loop
3120    IF Oper_complete THEN
3130      RETURN 0
3140    ELSE
3150      RETURN 1
3160    END IF
3170 Wait_loop: LOOP
3180      WAIT Wait_time
3190      OUTPUT Inst_addr;"*ESR?;STAT:CALLP:EVEN?"
3200      ENTER Inst_addr;Std_event,Call_proc_even
3210      IF Std_event THEN RETURN Oper_complete=0
3250      IF BIT(Call_proc_even,LOG(1)/LOG(2)) THEN RETURN Oper_complete=1
3281    END LOOP
```

ManualsPlus.com


```
3290  FNEND
4000 Set_state: DEF FNSet_state(State$)
4010    COM /Io_addresses/ INTEGER Inst_addr,Bus_addr
4020    COM /Prog_control/ INTEGER Std_event,Wait_time
4030    INTEGER Ptr_value,Call_proc_even
4040    SELECT State$
4050    CASE "Active"
4060      Ptr_value=1
4070    CASE "Register"
4080      Ptr_value=1
4090    CASE "Page"
4100      Ptr_value=32
4110    CASE "Handoff"
4120      Ptr_value=32
4130    CASE "Originate"
4140      Ptr_value=32
4150    CASE "Release"
4160      Ptr_value=1
4170    END SELECT
4180    IF State$="Originate" THEN
4190      OUTPUT Inst_addr;"STAT:CALLP:PTR "&VAL$(Ptr_value)
4200    ELSE
4210      OUTPUT Inst_addr;"STAT:CALLP:PTR "&VAL$(Ptr_value)&";:CALLP:"&State$
4220    END IF
4230    LOOP
4240      WAIT Wait_time
4250      OUTPUT Inst_addr;"*ESR?;STAT:CALLP:EVEN?"
4260      ENTER Inst_addr;Std_event,Call_proc_even
4270      IF Std_event THEN RETURN 0
4280      IF BIT(Call_proc_even,LOG(Ptr_value)/LOG(2)) THEN RETURN 1
4290    END LOOP
4300  FNEND
5010 Read_rcdd_data: SUB Read_rcdd_data(Fields$)
5020    OPTION BASE 1
5030    COM /Io_addresses/ INTEGER Inst_addr,Bus_addr
5040    COM /Prog_control/ INTEGER Std_event,Wait_time
5050    DIM Rcdd$(6)[40]
5060    INTEGER N
5070    WAIT .1!Allow time for RCDD data fields to be updated.
5080    FOR N=1 TO LEN(TRIM$(Fields$))
5090      OUTPUT Inst_addr;"CALLP:RCDD"&Fields$[N,N]&"?"
5100      ENTER Inst_addr;Rcdd$(N)
5110      PRINT "RCDD"&VAL$(N)&" = "&Rcdd$(N)
5120    NEXT N
5130  SUBEND
5140   !
```

ManualsPlus.com


```
6000 Order: DEF FNOrder(Order$,INTEGER Parm)
6010    COM /Io_addresses/ INTEGER Inst_addr,Bus_addr
6020    COM /Prog_control/ INTEGER Std_event,Wait_time
6030    INTEGER Ptr_value,Call_proc_even
6040    SELECT Order$
6050    CASE "Power"
6060      Ptr_value=32
6070      OUTPUT Inst_addr;"STAT:CALLP:PTR "&VAL$(Ptr_value)
6080      OUTPUT Inst_addr;"CALLP:ORD 'CHNG PL "&VAL$(Parm)&"'"
6090    CASE "Mainten"
6100      Ptr_value=16
6110      OUTPUT Inst_addr;"STAT:CALLP:PTR "&VAL$(Ptr_value)
6120      OUTPUT Inst_addr;"CALLP:ORD 'MAINTEN'"
6130    CASE "Alert"
6140      Ptr_value=32
6150      OUTPUT Inst_addr;"STAT:CALLP:PTR "&VAL$(Ptr_value)
6160      OUTPUT Inst_addr;"CALLP:ORD 'ALERT'"
6170    END SELECT
6180    LOOP
6190      WAIT Wait_time
6200      OUTPUT Inst_addr;"*ESR?;STAT:CALLP:EVEN?"
6210      ENTER Inst_addr;Std_event,Call_proc_even
6220      IF Std_event THEN RETURN 0
6230      IF BIT(Call_proc_even,LOG(Ptr_value)/LOG(2)) THEN RETURN 1
6240    END LOOP
6250  FNEND
6260  !
7000 Print_error: SUB Print_error
7010    OPTION BASE 1
7020    COM /Io_addresses/ INTEGER Inst_addr,Bus_addr
7030    COM /Prog_control/ INTEGER Std_event,Wait_time
7040    INTEGER N
7050    DIM Error_message$[255],Error$(5)[20]
7060    Error$(2)="Query"
7070    Error$(3)="Device Dependent"
7080    Error$(4)="Execution"
7090    Error$(5)="Command"
7100    WAIT .1 !Allow time for Error Queue to be updated.
7110    FOR N=2 TO 5
7120      IF BIT(Std_event,N) THEN
7130        PRINT "A "&Error$(N)&" error has occurred."
7140        OUTPUT Inst_addr;"SYSTem:ERRor?"
7150        ENTER Inst_addr;Error_number,Error_message$
7160        PRINT Error_number,Error_message$
7170      END IF
7180    NEXT N
```

ManualsPlus.com


```
7190    IF BINAND(Std_event,195) THEN
7200      BEEP
7210      PRINT "Unrecognized condition. Standard Event register = ";Std_event
7220    END IF
7230    STOP
7240  SUBEND
7250  !
10000 Meas_carrier: SUB Meas_carrier
10010   COM /Io_addresses/ INTEGER Inst_addr,Bus_addr
10015   ON TIMEOUT Bus_addr,5 RECOVER Timed_out
10020   OUTPUT Inst_addr;"DISP ACNT;:CALLP:MODE 'MEAS';:MEAS:RFR:POW?;FREQ:ERR?"
10030   ENTER Inst_addr;Power,Freq_error
10040   OUTPUT Inst_addr;"MEAS:AFR:FREQ?;FM?"
10050   ENTER Inst_addr;Audiofreq,Deviation
10060   PRINT USING "K,2D.3D,K";"Carrier Power = ";Power;" Watts"
10070   PRINT USING "K,2D.3D,K";"Audio Frequency = ";Audiofreq/1000;" kHz"
10080   PRINT USING "K,2D.3D,K";"FM Deviation = ";Deviation/1000;" kHz"
10090   PRINT USING "K,2D.3D,K";"Carrier Freq Error = ";Freq_error/1000;" kHz"
10100   SUBEXIT
10110 Timed_out:!
10120   ON TIMEOUT Bus_addr,5 GOTO Cannot_recover
10130   CLEAR Inst_addr
10140   OUTPUT Inst_addr;"trig:abort;mode:retr:rep"
10150   DISP "you should have the box back."
10160   ENABLE
10170 Cannot_recover:!
10180   DISP "Cannot regain control of the Test Set."
10190   STOP
10200 SUBEND
10210  !
11010 Meas_sinad: SUB Meas_sinad
11020   COM /Io_addresses/ INTEGER Inst_addr,Bus_addr
11030   INTEGER N
11035   ON TIMEOUT Bus_addr,5 RECOVER Timed_out
11040   OUTPUT Inst_addr;"DISP CME;:AFG1:DEST 'FM';FREQ 1KHZ;FM 8KHZ;FM:STAT ON"
11050   OUTPUT Inst_addr;"AFAN:INP 'AUDIO IN';DEMP 'OFF';DET 'RMS'"
11060   OUTPUT Inst_addr;"AFAN:FILT1 'C MESSAGE';FILT2 '>99KHZ LP'"
11070   OUTPUT Inst_addr;"MEAS:AFR:SEL 'SINAD';:RFG:AMPL -116DBM"
11080   OUTPUT Inst_addr;"TRIG:MODE:RETR SINGLE;SETT FULL"
11090   Avg_sinad=0
11100   FOR N=1 TO 5
11110     OUTPUT Inst_addr;"TRIG;:MEAS:AFR:SINAD?"
11120     ENTER Inst_addr;Sinad
11130     Avg_sinad=Avg_sinad+Sinad
11140   NEXT N
11150   PRINT USING "K,3D.2D,K";"SINAD = ";Avg_sinad/N;" dB at -116 dBm."
11160   OUTPUT Inst_addr;"TRIG:MODE:RETR REP;SETT FULL"
11170   OUTPUT Inst_addr;"RFG:AMPL -47DBM;:DISP ACNT"
11180   SUBEXIT
```

ManualsPlus.com


```
11190 Timed_out:!
11200   ON TIMEOUT Bus_addr,5 GOTO Cannot_recover
11210   CLEAR Inst_addr
11220   OUTPUT Inst_addr;"trig:abort;mode:retr:rep"
11230   DISP "you should have the box back."
11240   ENABLE
11250 Cannot_recover:!
11260   DISP "Cannot regain control of the Test Set."
11270   STOP
11280 SUBEND
11290 !
```

Comments for Polling Example Program

Table 56 Comments For Polling Example Program

Program Line Number	Comment
70	The polling loops require a wait statement to allow the Test Set time to process. The loops have a WAIT statement included so that only this line need be changed to set the polling wait time.
190	The number of the received data field(s) to be read is passed to the Read_rcdd_data subprogram as string data. In this example fields 1, 2 and 3 will be read. The order in which the field numbers are passed dictates the order in which they are printed.
330,340	A dummy variable is required to satisfy the FNOrder function passed parameter list. This is necessary because IBASIC does not support the OPTIONAL keyword in function and subprogram passed parameter lists.
6060	Ptr_value is the value that the positive transition filter will be set to. The value is determined by which pseudo-LED will light when the desired command is completed. For example, a successful order to change power is indicated by the Connect pseudo-LED lighting. Therefore the Ptr_value is set to 32 (2^5) for the Power command.

ManualsPlus.com

Table 56 Comments For Polling Example Program (Continued)

Program Line Number	Comment
1020	* Reset the Test Set: *RST * Clear the status reporting system: *CLS * Clear the Service Request Enable Register: *SRE 0 * Preset the transition filters to pass no transitions: STAT:CALLP:PTR 0;NTR 0 The filters will be set by the functions FNSet_state and FNOrder. The functions will set the proper filter values to pass the desired transition. * The Test Set's HP-IB interface has a large input buffer and can handshake in several commands. The commands are processed serially out of the input buffer. In this example program the Cnfg_srvc_intrp sends 8 commands to the Test Set in rapid succession. The *RST command requires several seconds to execute. Since the Test Set can handshake in many commands it can appear to the control program that the Test Set has executed all of the commands sent, when in reality they have only been placed in the input buffer. To prevent the control program from getting ahead of the Test Set the *OPC? query command is used to synchronize the Test Set and the control program.
4060	Ptr_value is the value that the positive transition filter will be set to. The value is determined by which pseudo-LED will light when the desired command is completed. For example, a successful PAGE is indicated by the Connect pseudo-LED lighting. Therefore the Ptr_value is set to 32 (2^5) for the Page command.
4240	Polling loops require a wait statement to allow time for the Test Set to process the Call Processing commands.
4250 to 4280	Poll the Standard Event Status Register and the Call Processing Event Register. First check for an error condition in the Standard Event Status Register. If an error is detected return a zero (operation not complete). If no errors are detected then the Call Processing Event register is checked to determine if the operation has completed. If the operation has completed then return a 1 (operation complete). If the operation has not completed then loop again. In a 'real world' situation the function should take some action if the Call Processing subsystem never completes (if the command IF BIT(Call_proc_even,LOG(Ptr_value)/LOG(2)) never goes to the TRUE state). This branch is left out of the example function to minimize the number of program lines. As written, the function assumes that the Call Processing subsystem will complete successfully and the polling loop will be exited.

ManualsPlus.com

9

Error Messages

ManualsPlus.com

General Information About Error Messages

Information concerning error messages displayed by the Test Set may be found in one of the following manuals:

- *User's Guides*
- *Programmer's Guide*
- *Assembly Level Repair Manual*
- *Instrument BASIC User's Handbook (not included with manual set)*:
  - *Instrument BASIC Users Handbook Version 2.0*
    (Agilent P/N E2083-90005)

The format of the displayed message determines which manual contains information about the error message. There are four basic error message formats:

- Positive numbered error messages
- IBASIC error messages
- GPIB error messages
- Text only error messages

The following paragraphs give a brief description of each message format and direct you to the manual to look in for information about error messages displayed in that format.

ManualsPlus.com

Positive Numbered Error Messages

Positive numbered error messages are generally associated with IBASIC. Refer to the *Instrument BASIC User's Handbook* for information on IBASIC error messages.

Positive numbered error messages take the form: ERROR XX <error message>

For example

`Error 54 Duplicate file name`

or

`Error 80 in 632 Medium changed or not in drive`

ManualsPlus.com

Negative Numbered Error Messages

Negative numbers preceding the error messages text correspond to the error conditions outlined in the Standard Commands for Programmable Instruments (SCPI). For more information on SCPI, order the following book,

A Beginner's Guide to SCPI Addison-Wesley Publishing Company ISBN 0-201-56350-9
Agilent P/N 5010-7166

or contact,

Fred Bode, Executive Director SCPI Consortium
8380 Hercules Drive, Suite P3
La Mesa, CA 91942
Phone: (619) 697-8790, FAX: (619) 697-5955 CompuServe Number: 76516,254

Negative numbered error messages take the form: ERROR -XX <error message>

For example

`Error -128 Numeric data not allowed`

or

`Error -141 Invalid character data`

ManualsPlus.com

IBASIC Error Messages

IBASIC Error Messages are associated with IBASIC operation. IBASIC error messages can have both positive and negative numbers. Only the negative numbered messages are explained in this documentation. Refer to the **“GPIB Error Messages” on page 634**for information on negative numbered error messages (the error message associated with a negative number is the same for GPIB errors and IBASIC errors).

IBASIC error messages take the following form: IBASIC Error: -XX <error message>

For example

```
IBASIC Error: -286 Program runtime error
```

ManualsPlus.com

GPIB[1] Error Messages

GPIB Error Messages are associated with GPIB operation.

GPIB error messages take the following form: HP-IB Error: -XX <error message> or HP-IB Error <error message>

For example

HP-IB Error: -410 Query INTERRUPTED.

or

HP-IB Error: Input value out of range.

1. GPIB was formerly called HP-IB for Hewlett-Packard® instruments. Some labels on the instrument may still reflect the former name.

ManualsPlus.com

Text Only Error Messages

Text only error messages are generally associated with manual operation of the Test Set. Refer to the *Agilent Technologies 8920 User's Guide* for information on text only error messages.

Text only error messages can also be displayed while running the Test Set's built-in diagnostic or calibration utility programs. Refer to the *Agilent Technologies 8920 Assembly Level Repair* manual for information on text only error messages displayed while running the Test Set's built-in diagnostic or calibration utility programs.

Text only error messages take the following form: This is an error message.

For example

```
Input value out of range.
```

ManualsPlus.com

The Message Display

During instrument operation, various messages may appear on the Test Set's display. Prompt-type messages generally appear on the first line of the Test Set's display. General operating and error messages usually appear on the second line of the display. Some messages are persistent; they remain displayed until the error condition no longer exists, or until another persistent message with greater priority occurs. Other messages are only displayed when the error first occurs; they are removed when a key is pressed or the knob is turned, or when an GPIB command is received. Many of the messages are displayed on the MESSAGE screen until the instrument is turned off.

Messages that are about error conditions may tell you what to do to correct the error (turn something off, reduce a field's value, press a certain key, and so forth). Messages and prompts are sometimes accompanied by a beep or warble.

NOTE:

Warbles and Beeps

A warble sound indicates that an instrument-damaging event is occurring. Beeps often occur only with the first occurrence of the message. Prompts are generally silent.

ManualsPlus.com

Non-Recoverable Firmware Error

The non-recoverable firmware error is very important. It appears when an unanticipated event occurs that the Test Set's firmware cannot handle. The message appears in the center of the Test Set's display and (except for the two lines in the second paragraph) has the following form:

```
Non-recoverable firmware error.  Please record the 2 lines of
text below and contact Agilent Technologies through your local
service center or by calling (800) 827-3848 (USA, collect) and
asking to speak to the 8920A Service Engineer.

 'Address error exception'
  at line number 0

To continue operation, turn POWER off and back on.
```

Follow the instructions in the message.

Unfortunately, you will not be able to recover from this condition. You must switch the Test Set off and back on. When you rerun the test where the Error Message occurred, it may not occur again. If it does reappear, it would be helpful to Agilent to record exactly what the configuration of the instrument was when the error appeared and contact HP.

ManualsPlus.com

GPIB Errors

Most GPIB errors occur when the control program attempts to query a measurement that is not currently available, or tries to access an instrument connected to the external GPIB without configuring the Test Set as the System Controller. When diagnosing the cause of an error condition check for these conditions first.

ManualsPlus.com

Text Only GPIB Errors

Un-numbered (text only) GPIB error messages are generally self-explanatory. For example, trying to retrieve a saved register that does not exist generates the following error message:

`HP-IB Error: Register does not exist.`

The following list contains a subset of the Test Set's text only GPIB error messages. These messages represent error conditions which may require explanation in addition to the error message text.

HP-IB Error during Procedure catalog. Check Config.

This error occurs when the Test Set fails to access an external GPIB disk drive when trying to obtain a catalog of procedure files. This would occur when the **`Select Procedure Location:`** field on the TESTS (Main Menu) screen is set to **`Disk`** and the operator then tries to select a procedure filename using the **`Select Procedure FIlename:`** field. Ensure that the **`Mode`** field on the I/O CONFIGURE screen is set to **`Control`** and that the **`External Disk Specification`** field on the TESTS (External Devices) screen has the correct mass storage volume specifier for the external disk drive.

HP-IB Query Error. Check instrument state.

This message usually appears when the control program queries a measurement that is not currently available (on the currently displayed screen and in the ON state), such as querying the TX Frequency measurement when **`TX Freq Error`** is displayed.
This message may also be immediately followed by the message,
`HP-IB Error: –420: Query UNTERMINATED.`

ManualsPlus.com

HP-IB Error: Not Enough Memory Available for Save.

This message will be generated when the control program tries to save the current Test Set state into a Save/Recall register using the REG:SAVE commands, but there is insufficient memory available in the Test Set. The Test Set's non-volatile RAM is shared by the following resources:

- IBASIC programs
- Save/Recall registers
- RAM Disk

In order to save the current Test Set state into a Save/Recall register more non-volatile RAM will have to be made available. This can be done by,

- reducing the size of the IBASIC program
- deleting one or more existing Save/Recall registers
- recovering RAM Disk space

The ROM Disk utility RAM_USAGE will display the total amount of non-volatile RAM installed in the Test Set, the RAM Disk allocation, the Save/Recall register allocation and the amount of non-volatile RAM available to IBASIC.

HP-IB Error: Unknown Save/Recall error.

This error can occur on a Test Set when trying to SAVE the instrument state to a mass storage device with a LIF formatted media. The default file system for the Test Set is DOS. Refer to **"Default File System" on page 360** for more details.

HP-IB Error: HP-IB Units cause invalid conversion of attr.

This error is generated when trying to change Attribute Units and one of the Data Function values is set to zero. If this error is encountered the programmer must change the Data Function settings to values that can be converted to the new units_of_measure. Refer to **"Changing Attribute Units." on page 79** for more details.

ManualsPlus.com

Numbered GPIB Error Descriptions

The following GPIB errors can be generated under any of the following conditions:

- controlling the Test Set with an IBASIC program running on the built-in IBASIC controller
- controlling GPIB devices/instruments, connected to the Test Set's external GPIB bus, with an IBASIC program running on the built-in IBASIC controller
- controlling the Test Set with a program running on an external controller
- using the Test Set manually to print to an external GPIB printer
- using the Test Set manually to access procedure/library/code files stored on an external GPIB disk

NOTE: **GPIB Parser.** The term "Parser" is used in the following error message descriptions. It refers to the Test Set's GPIB command parser.

ManualsPlus.com

Error –100 **Command error**

This code indicates only that a Command Error as defined in *IEEE 488.2, 11.5.1.1.4* has occurred.

Error –101 **Invalid character**

A syntactic element contains a character which is invalid for that type.

Error –102 **Syntax error**

An unrecognized command or data type was encountered; for example, a string value was received when the *device* does not accept strings.

Error –103 **Invalid separator**

The parser was expecting a separator and encountered an illegal character. For example, the colon used to separate the FREQ and AMPL commands should be omitted in the following command:

RFG:FREQ 850 MHZ**:**;AMPL –35

Error –104 **Data type error**

The parser recognized a data element different than one allowed. For example, numeric or string data was expected but block data was encountered.

Error –105 **GET not allowed**

A Group Execute Trigger was received within a program message (see *IEEE 488.2, 7.7)*.

Error –108 **Parameter not allowed**

More parameters were received than expected for the header. For example, the *ESE common command only accepts one parameter; receiving *ESE 36,1 is not allowed.

Error –109 **Missing parameter**

Fewer parameters were received than required for the header. For example, the *ESE common command requires one parameter; receiving *ESE is not allowed.

ManualsPlus.com

Error –110 **Command header error**

An error was detected in the header.

Error –111 **Header separator error**

A character which is not a legal header separator was encountered while parsing the header.

Error –112 **Program mnemonic too long**

The header contains more than twelve characters (see IEEE 488.2,7.6.1.4).

Error –113 **Undefined header**

The header is syntactically correct, but it is undefined for this specific *device*. For example, *XYZ is not defined for any *device*.

Error –114 **Header suffix out of range**

Indicates that a nonheader character has been encountered in what the parser expects is a header element.

Error –120 **Numeric data error**

This error, as well as errors –121 through –128, are generated when parsing a data element which appears to be numeric, including the nondecimal numeric types.

Error –121 **Invalid character in number**

An invalid character for the data type being parsed was encountered. For example, an alpha in a decimal numeric or a “9” in octal data.

Error –123 **Exponent too large**

The magnitude of the exponent was larger than 32000 (see *IEEE 488.2, 7.7.2.4.1)*.

Error –124 **Too many digits**

The mantissa of a decimal numeric data element contained more than 255 digits excluding leading zeros (see *IEEE 488.2, 7.7.2.4.1)*.

ManualsPlus.com

Error –128 **Numeric data not allowed**

A legal numeric data element was received, but the *device* does not accept one in this position for the header.

Error –130 **Suffix error**

This error, as well as errors –131 through –138, are generated when parsing a suffix.

Error –131 **Invalid suffix**

The suffix does not follow the syntax described in *IEEE 488.2 7.7.3.2*, or the suffix is inappropriate for this *device*.

Error –134 **Suffix too long**

The suffix contained more than 12 characters (see *IEEE 488.2, 7.7.3.4*).

Error –138 **Suffix not allowed**

A suffix was encountered after a numeric element which does not allow suffixes.

Error –140 **Character data error**

This error, as well as errors –141 through –148, are generated when parsing a character data element.

Error –141 **Invalid character data**

Either the character data element contains an invalid character or the particular element received is not valid for the header.

Error –144 **Character data too long**

The character data element contains more than twelve characters (see *IEEE 488.2, 7.7.1.4*).

Error –148 **Character data not allowed**

A legal character data element was encountered where prohibited by the *device*.

ManualsPlus.com

Error –150 **String data error**

This error, as well as errors –151 through –158, are generated when parsing a string element.

Error –151 **Invalid string data**

A string data element was expected, but was invalid for some reason (see *IEEE 488.2, 7.7.5.2*). For example, an END message was received before the terminal quote character.

Error –152 **Parity error**

Parity error

Error –158 **String data not allowed**

A string data element was encountered but was not allowed by the *device* at this point in parsing.

Error –160 **Block data error**

This error, as well as errors –161 through –168, are generated when parsing a block data element.

Error –161 **Invalid block data**

A block data element was expected, but was invalid for some reason (see *IEEE 488.2 7.7.6.2*). For example, an END message was received before the length was satisfied.

Error –168 **Block data not allowed**

A legal block data element was encountered but was not allowed by the *device* at this point in parsing.

Error –170 **Expression error**

This error, as well as errors –171 through –178, are generated when parsing an expression data element.

ManualsPlus.com

Error –171 **Invalid expression**

The expression data element was invalid (see *IEEE 488.2, 7.7.7.2*); for example, unmatched parentheses or an illegal character.

Error –178 **Expression data not allowed**

A legal expression data was encountered but was not allowed by the *device* at this point in parsing.

Error –180 **Macro error**

This error, as well as errors –181 through –184, are generated when defining a macro or executing a macro.

Error –181 **Invalid outside macro definition**

Indicates that a macro parameter placeholder was encountered outside of a macro definition.

Error –183 **Invalid inside macro definition**

Indicates that the program message unit sequence, sent with a *DDT or *DMC command, is syntactically invalid (see .

Error –184 **Macro parameter error**

Indicates that a command inside the macro definition had the wrong number or type of parameters.

Error –200 **Execution error**

This code indicates only that an Execution Error as defined in *IEEE 488.2, 11.5.1.1.5* has occurred.

Error –201 **Invalid while in local**

Indicates that a command is not executable while the *device* is in local due to a hard local control (see *IEEE 488.2, 5.6.1.5*). For example, a *device* with a rotary switch receives a message which would change the switches state, but the *device* is in local so the message can not be executed.

ManualsPlus.com

Error –202 **Settings lost due to rtl**

Indicates that a setting associated with a hard local control (see *IEEE 488.2, 5.6.1.5*) was lost when the *device* changed to LOCS from REMS or to LWLS from RWLS.

Error –210 **Trigger error**

Error –211 **Trigger ignored**

Indicates that a GET, *TRG, or triggering signal was received and recognized by the device but was ignored because of device timing considerations. For example, the device was not ready to respond.

Error –212 **Arm ignored**

Indicates that an arming signal was received and recognized by the *device* but was ignored.

Error –213 **Init ignored**

Indicates that a request for a measurement initiation was ignored as another measurement was already in progress.

Error –214 **Trigger deadlock**

Indicates that the trigger source for the initiation of a measurement is set to GET and subsequent measurement query is received. The measurement cannot be started until a GET is received, but the GET would cause an INTERRUPTED error.

Error –215 **Arm deadlock**

Indicates that the arm source for the initiation of a measurement is set to GET and subsequent measurement query is received. The measurement cannot be started until a GET is received, but the GET would cause an INTERRUPTED error.

Error –220 **Parameter error**

Indicates that a program data element related error occurred.

ManualsPlus.com

Error –221 **Settings conflict**

Indicates that a legal program data element was parsed but could not be executed due to the current device state (see *IEEE 488.2, 6.4.5.3 and 11.5.1.1.5*).

Error –222 **Data out of range**

Indicates that a legal program data element was parsed but could not be executed because the interpreted value was outside the legal range as defined by the *device* (see *IEEE 488.2, 11.5.1.1.5*).

Error –223 **Too much data**

Indicates that a legal program data element of block, expression, or string type was received that contained more data than the device could handle due to memory or related device- specific requirements.

Error –224 **Illegal parameter value**

Used where exact value, from a list of possibles, was expected.

Error –230 **Data corrupt or stale**

Possibly invalid data; new reading started but not completed since last access.

Error –231 **Data questionable**

Indicates that measurement accuracy is suspect.

Error –240 **Hardware error**

Indicates that a legal program command or query could not be executed because of a hardware problem in the *device*.

Error –241 **Hardware missing**

Indicates that a legal program command or query could not be executed because of missing *device* hardware. For example, an option was not installed.

Error –250 **Mass storage error**

Indicates that a mass storage error occurred.

ManualsPlus.com

Error –251 **Missing mass storage**

Indicates that a legal program command or query could not be executed because of missing mass storage. For example, an option that was not installed.

Error –252 **Missing media**

Indicates that a legal program command or query could not be executed because of a missing media. For example, no disk.

Error –253 **Corrupt media**

Indicates that a legal program command or query could not be executed because of corrupt media. For example, bad disk or wrong format.

Error –254 **Media full**

Indicates that a legal program command or query could not be executed because the media was full. For example, there is no room on the disk.

Error –255 **Directory full**

Indicates that a legal program command or query could not be executed because the media directory was full.

Error –256 **File name not found**

Indicates that a legal program command or query could not be executed because the file name on the device media was not found. For example, an attempt was made to read or copy a nonexistent file.

Error –257 **File name error**

Indicates that a legal program command or query could not be executed because the file name on the device media was in error. For example, an attempt was made to copy to a duplicate file name.

Error –258 **Media protected**

Indicates that a legal program command or query could not be executed because the media was protected. For example, the write-protect switch on a memory card was set.

ManualsPlus.com

Error –260 **Expression error**

Indicates that an expression program data element related error occurred.

Error –261 **Math error in expression**

Indicates that a syntactically legal expression program data element could not be executed due to a math error. For example, a divide-by-zero was attempted.

Error –270 **Macro error**

Indicates that a macro-related execution error occurred.

Error –271 **Macro syntax error**

Indicates that a syntactically legal macro program data sequence, according to *IEEE 488.2, 10.7.2*, could not be executed due to a syntax error within the macro definition (see *IEEE 488.2, 10.7.6.3*).

Error –272 **Macro execution error**

Indicates that a syntactically legal macro program data sequence could not be executed due to some error in the macro definition (see *IEEE 488.2, 10.7.6.3)*.

Error –273 **Illegal macro label**

Indicates that the macro label defined in the **DMC* command was a legal string syntax, but could not be accepted by the *device* (see *IEEE 488.2, 10.7.3 and 10.7.6.2*). For example, the label was too long, the same as a common command header, or contained invalid header syntax.

Error –274 **Macro parameter error**

Indicates that the macro definition improperly used a macro parameter placeholder (see *IEEE 488.2, 10.7.3*).

Error –275 **Macro definition too long**

Indicates that a syntactically legal macro program data sequence could not be executed because the string of block contents were too long for the device to handle (see *IEEE 488.2, 10.7.6.1*).

ManualsPlus.com

Error –276 **Macro recursion error**

Indicates that a syntactically legal macro program data sequence could not be executed because the device found it to be recursive (see *IEEE 488.2 10.7.6.6*).

Error –277 **Macro redefinition not allowed**

Indicates that syntactically legal macro label in the *DMC command could not be executed because the macro label was already defined (see *IEEE 488.2*, *10.7.6.4*).

Error –278 **Macro header not found**

Indicates that a syntactically legal macro label in the *GMC? query could not be executed because the header was not previously defined.

Error –280 **Program error**

Indicates that a downloaded program-related execution error occurred.

Error –281 **Cannot create program**

Indicates that an attempt to create a program was unsuccessful. A reason for the failure might include not enough memory.

Error –282 **Illegal program name**

The name used to reference a program was invalid. For example, redefining an existing program, deleting a nonexistent program, or in general, referencing a nonexistent program.

Error –283 **Illegal variable name**

An attempt was made to reference a nonexistent variable in a program.

Error –284 **Program currently running**

Certain operations dealing with programs are illegal while the program is running. For example, deleting a running program is not possible.

Error –285 **Program syntax error**

Indicates that syntax error appears in a downloaded program.

ManualsPlus.com

Error –286 **Program runtime error**

Error –300 **Device-specific error**

This code indicates only that a Device-Dependent Error as defined in *IEEE 488.2, 11.5.1.1.6* has occurred.

Error –310 **System error**

Indicates that some error, termed “system error” by the device, has occurred.

Error –311 **Memory error**

Indicates that an error was detected in the *device’s* memory.

Error –312 **PUD memory lost**

Indicates that the protected user data saved by the *PUD command has been lost.

Error –313 **Calibration memory lost**

Indicates that nonvolatile calibration data used by the *CAL? command has been lost.

Error –314 **Save/recall memory lost**

Indicates that the nonvolatile data saved by the *SAV command has been lost.

Error –315 **Configuration memory lost**

Indicates that nonvolatile configuration data saved by the *device* has been lost.

Error –330 **Self-test failed**

Error –350 **Queue overflow**

This code indicates that there is no room in the queue and an error occurred but was not recorded. This code is entered into the queue in lieu of the code that caused the error.

ManualsPlus.com

Error –400 **Query error**

This code indicates only that a Query Error as defined in *IEEE 488.2 11.5.1.1.7 and 6.3* has occurred.

Error –410 **Query INTERRUPTED**

Indicates that a condition causing an INTERRUPTED Query error occurred (see *IEEE 488.2, 6.3.2.3*). For example, a query followed by DAB or GET before a response was completely sent.

This message appears when you query a measurement without immediately entering the returned value into a variable. For example, the following program lines query the TX Frequency measurement and enter its value into a variable (Rf_freq):

```
OUTPUT 714;"MEAS:RFR:FREQ:ABS?"
ENTER 714;Rf_freq
```

Error –420 **Query UNTERMINATED**

Indicates that a condition causing an UNTERMINATED Query error occurred (see *IEEE 488.2, 6.3.2.2.*). For example, the *device* was addressed to talk and an incomplete program message was received.

This message usually appears when trying to access a measurement that is not active. For example, you cannot query the DTMF Decoder measurements from the DUPLEX TEST screen, or query the TX Frequency measurement when the **`TX Freq Error`** measurement is displayed.

Error –430 **Query DEADLOCKED**

Indicates that a condition causing a DEADLOCKED Query error occurred (see *IEEE 488.2, 6.3.1.7*). For example, both input buffer and output buffer are full and the device cannot continue.

Error –440 **Query UNTERMINATED after indefinite response**

Indicates that a query was received in the same program message after a query requesting an indefinite response was executed (see *IEEE 488.2, 6.5.7.5.7*).

ManualsPlus.com

Error –606 **Update of Input Module Relay Switch Count file failed.**

Indicates that the Test Set was not able to update the Input Module Relay Switch Count EEPROM file with the current switch count data from the non-volatile RAM switch count array. This error is most probably generated as a result of a hardware error or failure. Refer to the Test Set's *Assembly Level Repair* for diagnostic information.

Error –607 **Checksum of Non-Volatile RAM Relay Count data bad.**

Indicates that the Test Set was not able to generate the proper checksum for the Input Module Relay Switch Count data from the non-volatile RAM switch count array. This error is most probably generated as a result of a hardware error or failure. Refer to the Test Set's for diagnostic information.

Error –608 **Initialization of Input Module Relay Count file failed.**

Indicates that the Test Set was not able to initialize the Input Module Relay Switch Count EEPROM file during installation of a new input module. This error is most probably generated as a result of a hardware error or failure. Refer to the Test Set's for diagnostic information.

Error –1300 **Order attempted while not in Connect state.**

Indicates that an attempt was made to send an order type Mobile Station Control Message (that is - order a change in power level, put the mobile station in maintenance mode, or send an alert message to the mobile station) when the Call Processing Subsystem was not in the Connect state.

Error –1301 **Handoff attempted while not in Connect state.**

Indicates that an attempt was made to handoff a mobile station to a new voice channel when the Call Processing Subsystem was not in the Connect state.

Error –1302 **Release attempted while not in Connect state.**

Indicates that an attempt was made to send a Release message to a mobile station when the Call Processing Subsystem was not in the Connect state.

Error –1303 **Page attempted while not in Active state.**

Indicates that an attempt was made to Page a mobile station when the Call Processing Subsystem was not in the Active state.

ManualsPlus.com

Error –1304 **Origination attempted while not in Active state.**

Indicates that a mobile station attempted to originate a call to the simulated Base Station when the Call Processing Subsystem was not in the Active state.

Error –1305 **Registration attempted while not in Active state.**

Indicates that an attempt was made to send a Registration message to a mobile station when the Call Processing Subsystem was not in the Active state.

Error –1306 **Origination in progress.**

Indicates that an attempt was made to; register, page, handoff, release, order a change in power level, put the mobile station in maintenance mode, or send an alert message to the mobile station while an origination was in progress.

Error –1307 **Timeout occurred while attempting to register Mobile.**

Indicates that the simulated Base Station's internal timer expired before receiving a response from the mobile station during a registration attempt. The internal timer is set to 20 seconds when the **`Register`** state is entered.

Error –1308 **Timeout occurred while attempting to page Mobile.**

Indicates that the simulated Base Station's internal timer expired before receiving a response from the mobile station during a page attempt. The internal timer is set to 20 seconds when the **`Page`** state is entered.

Error –1309 **Timeout occurred while attempting to access Mobile.**

Indicates that the simulated Base Station's internal timer expired before receiving a response from the mobile station during an access attempt. The internal timer is set to 20 seconds when the **`Access`** state is entered.

Error –1310 **Timeout occurred while attempting to alert Mobile.**

Indicates that the simulated Base Station's internal timer expired before receiving a response from the mobile station during an alert attempt. The internal timer is set to 20 seconds when the alert order is sent to the mobile station.

ManualsPlus.com

Error –1311 **RF power loss indicates loss of Voice Channel.**

When any Call Processing Subsystem screen is displayed (except the **ANALOG MEAS** screen) and the Call Processing Subsystem is in the **Connect** state, the host firmware constantly monitors the mobile station's transmitted carrier power. If the power falls below 0.0005 Watts the simulated Base Station will terminate the call and return to the **Active** state. This error message is displayed if the host firmware has detected that the mobile station's carrier power has fallen below the 0.0005 Watts threshold. The call is dropped and the Call Processing Subsystem returns to the **Active** state.

NOTE: In order to ensure that the host firmware makes the correct decisions regarding the presence of the mobile stations's RF carrier, the Test Set's RF power meter should be zeroed when first entering the Call Processing Subsystem (that is - the first time the Call Processing Subsystem is selected during a measurement session). Failure to zero the power meter can result in erroneous RF power measurements. See "Conditioning The Test Set For Call Processing" in the *Agilent Technologies 8920 User's Guide* for information on zeroing the RF Power meter manually or **"Conditioning the Test Set for Call Processing" on page 469** of this manual for information on zeroing the RF Power meter programmatically.

Error –1312 **Data from RVC contains invalid bits in word [1,2,3].**

Indicates that the decoded data received on the reverse voice channel contains invalid bits in word 1 and/or word 2 and/or word 3. The raw decoded data is displayed in hexadecimal format in the top right-hand portion of the **CALL CONTROL** screen. Raw decoded data is only displayed when the **CALL CONTROL** screen **Display** field is set to **Data.**

Error –1313 **Timeout occurred while in Maintenance state.**

Indicates that the simulated Base Station's internal timer expired before the mobile station was taken out of the maintenance state. The internal timer is set to 20 seconds when the maintenance order is sent to the mobile station.

Error –1314 **Alert attempted while not in Maintenance or Connect state.**

Indicates that an attempt was made to send an Alert order to the mobile station when the Call Processing Subsystem was not in the Maintenance state or Active state.

ManualsPlus.com

Error –1315 **Data from RECC contains invalid bits in word [1,2,3].**

Indicates that the decoded data received on the reverse control channel contains invalid bits in word 1 and/or word 2 and/or word 3. The raw decoded data is displayed in hexadecimal format in the top right-hand portion of the **CALL CONTROL** screen. Raw decoded data is only displayed when the **CALL CONTROL** screen **Display** field is set to **Data.**

Error –1316 **Incomplete data received on RECC for word [1,2,3].**

Indicates that the decoded data received on the reverse control channel did not contain the proper number of bits in word 1 and/or word 2 and/or word 3. The raw decoded data is displayed in hexadecimal format in the top right-hand portion of the **CALL CONTROL** screen. Raw decoded data is only displayed when the **CALL CONTROL** screen **Display** field is set to **Data.**

Error –1317 **Incomplete data received on RVC for word [1,2,3].**

Indicates that the decoded data received on the reverse voice channel did not contain the proper number of bits in word 1 and/or word 2 and/or word 3. The raw decoded data is displayed in hexadecimal format in the top right-hand portion of the **CALL CONTROL** screen. Raw decoded data is only displayed when the **CALL CONTROL** screen **Display** field is set to **Data.**

ManualsPlus.com

ManualsPlus.com

Index

Symbols

*CLS, 238
*ESE, 238
*ESE?, 238
*ESR?, 238
*IDN ?, 227
*OPC, 231
*OPC?, 234
*OPT ?, 228
*PCB, 239
*RCL, 240
*RST, 229
*SAV, 240
*SRE, 239
*SRE?, 239
*STB?, 239
*TRG, 239
*TST ?, 230
*WAI, 237
‘.LIB’ files, 372, 456
‘.NMT’ files, 370, 372
‘.PGM’ files, 372, 456
‘.PRC’ files, 372, 457
‘c’ files, 456
‘l’ files, 456
‘n’ files, 370
‘p’ files, 457

A

abbreviated address word
  forward control channel, 565
  reverse control channel, 521
access message, 556
Active Controller
  when capability required, 350
Active Measurement, 37
Adjacent Channel Power
  HP-IB command syntax diagram, 91
AdvanceLink (HP 68333F Version B.02.00) terminal emulator, 407, 420
AF Analyzer
  HP-IB command syntax diagram, 93
AF Freq
  CALL CONTROL screen, 477
AF Generator 1
  HP-IB command syntax diagram, 96
AF Generator 2
  HP-IB command syntax diagram, 97, 98
  pre-modulation filters, 97
ANALOG MEAS Screen
  amplitude, 603
  de-emphasis, 603
  detector, 603
  example measurement routines, 605
  filter 1, 604
  filter 2, 604
  fm deviation, 604
  how to program analog meas screen, 602
  requirements for using analog meas screen, 602
  tx freq error, 604
  tx power, 604
Analog MEAS Screen
  af anl in, 602
  af freq, 602
  af gen1 freq, 603
  af gen1 to, 603
Annunciators, 38
Arming measurements, 265
ASCII Text Files
  sending with ProComm Communications Software, 427
  sending with Windows Terminal, 426
Attribute Units, 77
Authent
  AUTHENTICATION screen, 509
AUTHENTICATION screen
  Authent, 509
Authentication screen
  1 of n, 515
  a_key, 508
  authent, 509
  esn, 510
  rand_a, 510
  rand_b, 511
  rand_u, 513
  randssd_1, 511
  randssd_2, 512
  randssd_3, 512
  ssda, 513, 514
AuthWORD
  CALLP, 517
Autoranging
  affect on measurement speed, 268
Autotuning
  affect on measurement speed, 268

B

Battery
  memory card, 380
  part numbers, 380
  replacing, 380
BSChalOrd
  CALLP, 517

C

Calibration Status Register Group, 312
  accessing registers contained in, 310, 314
  condition register bit assignments, 308, 313
Call Bit Screen
  access, 542
  active, 542
  connect, 542
  data spec, 542
  handoff, 543
  modifying the call bit screen message fields, 549
  page, 544
  reading the call bit screen message fields, 546
  register, 544
  release, 544
  set message, 545
Call Bit screen
  Order, 543
CALL CONFIGURE
  Sat Tol, 611
Call Configure screen
  Input Attenuator, 610
Call Control Screen
  access, 475
  active, 476
  amplitude, 477
  called number, 477
  cc order, 478
  ch loc, 480
  cntl channel, 481

ManualsPlus.com

Index

connect, 482
display, 482
DSAT, 489
DSAT/DST, 490
ESN(dec), 491
ESN(hex), 491
fm deivaiton, 492
handoff, 493
MSid, 493
order, 495
page, 497
phone num, 498
pwr lvl, 499
register, 500
release, 501
sat, 502
scm, 503
send word, 544
sid, 503
system type, 504
tx freq error, 504
tx power, 505
vc order, 506
Call Control screen
Chan, 479
Order, 506
Call Data Screen
access, 517
active, 517
connect, 518
display word, 518
handoff, 519
order, 519
page, 519
reading the call data screen message fields, 520
register, 519
release, 519
Call Processing
HP-IB command syntax diagram, 119
call processing
state diagram, 464
Call Processing Status Register Group, 307
program flow control, 471
Call Processing Subsystem
Accessing the Call Processing Subsystem Screens, 467
command syntax, 468
connecting a mobile station, 465
error messages, described, 654
error messages, reading, 470
first-time setup, 469
HP-IB Error Messages, 470
operational overview, 463
polling, 472
programming Analog Meas screen, 601
programming Call Bit screen, 539
programming Call Configure screen, 608
programming Call Control screen, 475, 516
Programming the AUTHENTICATION Screen, 507
querying data messages, 473
remote user interface description, 462
screen mnemonics, 467
service request, 472
status register group, 471
CALLP
AuthWORD, 517
BSChalOrd, 517
MRI Ord, 517
NRVC Ord, 517
RECCW A, 517
RECCW B, 517
RECCW C, 517
RECCW D, 517
RECCW E, 517
RVCBSChal, 517
RVCOrd, 517
RVCOrdCon, 517
UniqChCon, 517
Chan
Call Control screen, 479
clear status, *CLS, 238
CMAX
CALL CONFIGURE screen, 609
Code files, 370, 456
Common Commands, 226
CLS, 255
ESE, 255
ESE?, 255
ESR?, 255
IDN, 241
OPC, 249
OPC?, 251
OPT, 243
PCB, 256
RCL, 256
RST, 219, 246
SAV, 257
SRE, 256
SRE?, 256
STB?, 256
TRG, 256, 258
TST, 247
WAI, 254
Communicate Status Register Group, 325
accessing registers contained in, 327
condition register bit assignments, 326
Configure
HP-IB command syntax diagram, 113
control
filler message, 562
controller, external, 26, 40
COPY_PL, 383
Copying a volume, 384
Copying files, 384

D

data functions
AVG, 200
AVG - querying number of averages via HP-IB, 202
AVG - querying ON/OFF state via HP-IB, 201
AVG - resetting via HP-IB, 202
AVG - setting number of averages via HP-IB, 202
AVG - turning ON/OFF via HP-IB, 201
guidelines for using, 199, 200
HI LIMIT, 203
HI LIMIT - detecting if limit exceeded via HP-IB, 206
HI LIMIT - querying display units via HP-IB, 205
HI LIMIT - querying ON/OFF state via HP-IB, 204
HI LIMIT - querying setting via HP-IB, 206
HI LIMIT - resetting limit detection via HP-IB, 207
HI LIMIT - setting display units via

ManualsPlus.com

HP-IB, 205
HI LIMIT - setting value via HP-IB, 204
HI LIMIT - turning ON/OFF via HP-IB, 203
INCR SET, 207
INCR SET - querying display units via HP-IB, 209
INCR SET - querying mode via HP-IB, 208
INCR SET - querying value via HP-IB, 208
INCR SET - setting display units via HP-IB, 209
INCR SET - setting mode via HP-IB, 208
INCR SET - setting value via HP-IB, 207
INCR Up/Down (Arrow keys), 211
keys, 199
LO LIMIT, 203
LO LIMIT - detecting if limit exceeded via HP-IB, 206
LO LIMIT - querying display units via HP-IB, 205
LO LIMIT - querying ON/OFF state via HP-IB, 204
LO LIMIT - querying setting via HP-IB, 206
LO LIMIT - resetting limit detection via HP-IB, 207
LO LIMIT - setting display units via HP-IB, 205
LO LIMIT - setting value via HP-IB, 204
LO LIMIT - turning ON/OFF via HP-IB, 203
METER, 211
METER - querying high end point display units via HP-IB, 214
METER - querying high end point via HP-IB, 213
METER - querying low end point display units via HP-IB, 214
METER - querying low end point via HP-IB, 213
METER - querying number of intervals via HP-IB, 212
METER - querying ON/OFF state via HP-IB, 212
METER - setting high end point display units via HP-IB, 214
METER - setting high end point via HP-IB, 213
METER - setting low end point display units via HP-IB, 214
METER - setting low end point via HP-IB, 213
METER - setting number of intervals via HP-IB, 212
METER - turning ON/OFF via HP-IB, 211
querying ON/OFF state, 84
REF SET, 215
REF SET - querying ON/OFF state via HP-IB, 215
REF SET - querying reference point display units via HP-IB, 217
REF SET - querying reference point setting via HP-IB, 216
REF SET - setting reference point display units via HP-IB, 217
REF SET - setting reference point via HP-IB, 216
REF SET - turning ON/OFF via HP-IB, 215
turning ON and OFF, 83
using AVG via HP-IB, 200
using HI LIMIT via HP-IB, 203
using INCR SET via HP-IB, 207
using INCR Up/Down (Arrow keys) via HP-IB, 211
using LO LIMIT via HP-IB, 203
using METER via HP-IB, 211
using REF SET via HP-IB, 215
Default file system, 360
Detector
CALL CONFIGURE screen, 610
digital supervisory audio tone, 489
Disk drives
external, 365, 388
external - default mass storage volume specifier, 369
external - initializing media for, 388
Display
HP-IB command syntax diagram, 163
locking display screen via HP-IB, 273
querying displayed screen via HP-IB, 222
selecting screens via HP-IB, 222
Display Units, 71
DOS file names, 371
DOS file system, 371
initializing media for, 374
restrictions, 375
Downloading programs to Test Set, 415, 452
DSAT
Call Control Screen, 490
DSAT (hex)
Call Control Screen, 489

E

Encoder
pre-modulation filters, 97
EPSON card (see Memory card), 359, 366, 367, 377
Error Message Queue Group, 300
accessing the error message queue, 301
Error messages, 629
format of, 630
types of, 629
Example Programs, 612
comments, 620
polling example program, 622
SRQ example program, 614
extended address word
order, 566
reverse control channel, 523
voice channel assignment, 568
External Automatic Control Mode, 26
External controller, 22, 26, 40
External disk drives, 362, 365, 388
initializing media for, 374, 388

F

FCC mobile station control word 2
order, 566
voice channel assignment, 568
FCC mobile station control, word 1, 565
File names
conflicts, 373
recommendations, 373

ManualsPlus.com

Index

File system
  backing up files, 383
  copying volume, 384
  DOS, 371
  DOS file names, 371
  file name conflicts, 373
  file naming recommendations, 373
  file types, 374
  initializing media, 374, 382, 387, 388
  LIF, 371
  LIF file names, 371
  naming files, 371
  storing code files, 374
File types, 374
Files
  backing up, 383
  copying, 384
  storing, 374
Firmware error
  non-recoverable, 637
first word of called address, 526
Front panel
  functions not programmable, 43
  ON/OFF key, 83, 198
Front panel keys
  CANCEL key, 198
  CURSOR CONTROL knob, 198
  ENTER key, 198
  HOLD key, 223
  HP-IB command syntax, 198
  k1-k5, k1'-k3' keys, 223
  LOCAL key, 219
  MEAS RESET key, 219
  NO key, 198
  PRESET key, 219
  PREV key, 223
  PRINT key, 223
  RECALL key, 220
  SAVE key, 220
  SHIFT key, 198
  YES key, 198
FVC mobile station control message
  order, 570
  voice channel assignment, 572, 574, 576, 578, 579, 580, 581, 583, 584, 585, 586, 587, 588, 589, 591, 593, 595, 597, 599

H

Hardware Status Register #1 Group, 320
  accessing registers contained in, 322
  condition register bit assignments, 321
Hardware Status Register #2 Group, 316
  accessing registers contained in, 318
  condition register bit assignments, 317
HFS (Hierarchical File System), 371
Hierarchical File System (HFS), 371
HP 8920A Memory Card Part Numbers, 377
HP 8920B Memory Card Part Numbers, 377
HP-IB
  Active Controller, 39, 349, 350
  address - displaying, 45, 218
  address - factory setting, 45
  address - setting, 45, 218
  arming measurements, 265
  Attribute units - changing, 79
  Attribute units - definition, 77
  Attribute units - guidelines, 82
  Attribute units - querying, 82
  changing a field setting, 41
  Common Commands, 226
  Common Commands CLS, 255
  Common Commands ESE, 255
  Common Commands ESE?, 255
  Common Commands ESR?, 255
  Common Commands IDN, 241
  Common Commands OPC, 249
  Common Commands OPC?, 251
  Common Commands OPT, 243
  Common Commands PCB, 256
  Common Commands RCL, 256
  Common Commands RST, 219, 246
  Common Commands SAV, 257
  Common Commands SRE, 256
  Common Commands SRE?, 256
  Common Commands STB?, 256
  Common Commands TRG, 256, 258
  Common Commands TST, 247
  Common Commands WAI, 254
  configuration, 39
  display units - changing, 72
  display units - definition, 71
  display units - guidelines, 73
  display units - querying, 73
  downloading programs to Test Set, 415
  error messages, 629
  Errors, 629, 638
  extended addressing, 45
  external (select code 7), 25, 40
  getting started, 30
  Group Execute Trigger (GET), 258
  HP-IB units - changing, 75
  HP-IB units - definition, 74
  HP-IB units - guidelines, 76
  HP-IB units - querying, 76
  Increasing measurement speed, 268
  Increasing measurement speed (see Increasing Measurement Speed), 268
  Instrument Initialization (see Instrument Initialization), 339
  internal (select code 8), 25, 40
  local lockout, 51
  Local/Remote Triggering Changes, 261
  locking the display screen, 273
  making a simple measurement, 42
  measurement pacing, 265
  multiple addressing, 45
  passing control (see Passing Control), 349
  PROGram commands (see PROGram Subsystem), 432
  programming examples, 35, 41, 85
  programming guidelines, 32
  querying the lock/unlock state of the display screen, 274
  reading a field setting, 41
  Service requests (see Service Requests), 329
  standards, 30
  STATe command - definition, 83
  STATe command - guidelines, 84
  Status reporting (see Status reporting), 275
  System Controller, 39, 349, 350
  topics covered, 31
  Trigger - aborting, 262
  Trigger commands, 262
  Trigger event, 258
  Trigger modes, 259, 263
  Trigger modes - affect on measurement speed, 264, 268

ManualsPlus.com

Trigger modes - default settings, 261
Trigger modes - retriggering, 259, 263
Trigger modes - settings for fastest measurements, 264
Trigger modes - settings for most reliable measurements, 264
Trigger modes - settling, 260, 263
Triggering measurements, 258
units of measure, 71
uploading programs to Test Set, 416
using, 21
HP-IB command syntax
ACPower, 91
AFANalyzer, 93
AFGenerator1, 96
AFGenerator2, 97, 98
AUNits, 79
AUNits?, 82
AVERage
RESet, 202
STATe, 201
STATe?, 201
VALue, 202
VALue?, 202
CALLP, 119
CONFigure, 113
BADDress, 218
CPRocess, 119
DECoder, 159
diagram structure, 88
DISPlay, 163, 222
DUNits, 72
DUNits?, 73
ENCoder, 98
front panel keys, 198
guidelines, 67
HLIMit
DUNits, 205
DUNits?, 205
EXCeeded?, 206
RESet, 207
STATe, 203
STATe?, 204
VALue, 204
VALue?, 206
HP-IB only commands, 185
INCRement, 207, 211
DIVide, 210
DUNits, 209
DUNits?, 209
MODE, 208
MODE?, 208
MULTiply, 210
INCRement?, 208
Integer Number Setting, 192
LLIMit
DUNits, 205
DUNits?, 205
EXCeeded?, 206
RESet, 207
STATe, 203
STATe?, 204
VALue, 204
VALue?, 206
MEASure, 165
RESet, 219
METer
HEND, 213
DUNits, 214
DUNits?, 214
HEND?, 213
INTerval, 212
INTerval?, 212
LEND, 213
DUNits, 214
DUNits?, 214
LEND?, 213
STATe, 211
STATe?, 212
Multiple Number Measurement, 197
Multiple Real Number Setting, 194
Number Measurement, 195
OSCilloscope, 172
PROGram, 177
Real Number Setting, 193
REFerence
DUNits, 217
DUNits?, 217
STATe, 215
STATe?, 215
VALue, 216
VALue?, 216
REGister, 178
CLEar, 221
RECall, 220
SAVE, 220
RFANalyzer, 179
RFGenerator, 181
RINTerface, 182
SANalyzer, 183
SPECial, 185
DISPlay, 273
DISPlay?, 274
STATe, 83
STATe?, 84
STATus, 186, 187
TESTs, 188
TRIGger, 191
ABORt, 262
IMMediate, 262
MODE, 263
UNITs, 75
UNITs?, 76
use of single quotes, 37
use of spaces, 37, 68
using colons to separate commands, 69
using question mark to query setting/field, 70
using quotes for strings, 68
using semicolon colon command separator, 69, 272

ManualsPlus.com

Index

using semicolon to output multiple commands, 69
using upper/lower case letters, 67
HP-IB only commands
HP-IB command syntax diagram, 185

I

I/O Configure
HP-IB command syntax diagram, 113
IBASIC
avoiding program hangs, 36
command line, 392
Controller, 22, 24, 25, 40
Controller - default mass storage location, 368
Controller - interfacing to using serial ports, 396
Controller architecture, 24, 25
Controller screen, 391
COPY command, 384
copying files, 384
default file system, 360
EDIT mode - entering/exiting, 419
error messages, 629
GET command, 374
INITIALIZE command, 374, 382, 387, 388
initializing media, 374
language, 24
LOAD command, 374
making a simple measurement, 42
Mass Storage Volume Specifier (MSI), 382
MSI, 382
passing control back using PASS CONTROL, 352
program development (see Program Development), 393
requesting HP-IB active control, 353
running programs, 34
SAVE command, 374
selecting mass storage devices, 369
STORE command, 374
storing files, 374
IEEE 488.1
compliance, 43, 44
Interface Function Capabilities, 44
Passing Control (see Passing Control), 349
Remote Interface Message Capabilities, 46
SRQ (see Service Requests), 329
IEEE 488.2
Common Commands, 226
Common Commands CLS, 255
Common Commands ESE, 255, 297
Common Commands ESE?, 255, 296
Common Commands ESR?, 255, 294
Common Commands IDN, 241
Common Commands OPC, 249
Common Commands OPC?, 251
Common Commands OPT, 243
Common Commands PCB, 256, 351
Common Commands RCL, 256
Common Commands RST, 219, 246
Common Commands SAV, 257
Common Commands SRE, 256, 332
Common Commands SRE?, 256, 332
Common Commands STB?, 256, 280
Common Commands TRG, 256, 258
Common Commands TST, 247
Common Commands WAI, 254
Common CommandsRST, 344
compliance, 43, 44
Output Queue, 298
Overlapped commands, 66
Sequential commands, 66
Standard Event Status Register, 292
Status Byte Register, 277
Increasing measurement speed, 268
autoranging, 268
autotuning, 268
combining ENTER statements, 272
combining OUTPUT statements, 271
compound commands, 271
measurement setup time, 270
screen display time, 273
speed of control program, 271
Input Attenuator
Call configure screen, 610
instrument function
querying ON/OFF state, 84
turning ON and OFF, 83
Instrument Initialization, 339
Device Clear (DCL) HP-IB Bus Command, 347
Front panel PRESET key, 342
Interface Clear (IFC) HP-IB Bus Command, 348
methods of, 340
power on reset, 340
RST Common Command, 344
Selected Device Clear (SDC) HP-IB Bus Command, 348
Integer Number Setting
HP-IB command syntax diagram, 192
Internal Automatic Control Mode, 24, 27

K

keys
front panel, 43

L

Library files, 456
backing up, 383
LIF file names, 371
LIF file system, 371
initializing media for, 374
lock up
HP-IB bus, 260, 265

M

Manual Control Mode, 23, 27
Mass Storage Devices, 359
accessing, 370
default locations, 368
EPSON cards, 366, 367, 377
external disk drives, 365, 388
initializing media for, 374, 382, 387
OTP card, 367, 377
overview, 362
PCMCIA cards, 366, 367, 377
RAM Disk, 364, 386
ROM card, 367, 377
ROM Disk, 364, 376
selecting, 369
SRAM card, 366, 377
write protecting, 379
Mass storage locations
default values, 368
selecting, 369
Mass Storage Volume Specifier, 382
Measure

ManualsPlus.com

HP-IB command syntax diagram, 165
measurement
active, 23, 37
querying ON/OFF state, 84
querying value, 23, 38, 70
recommended sequence, 34
turning ON and OFF, 83
Measurement speed - increasing (see Increasing Measurement Speed), 268
Memory Cards, 359
address, 382
battery (see Battery), 380
initializing, 374, 382
inserting, 377
Mass Storage Volume Specifier, 382
OTP cards, 367
part numbers, 377
removing, 377
ROM cards, 367
SRAM cards, 366
using, 377
write-protect switch, 379
message
abbreviated address word, 565
access, 556
access type parameters global action, 556
C-FILMESS, 562
control filler, 562
extended address word, order, 566
extended address word, voice channel assignment, 568
FCC mobile station control, word 1, 565
FCC mobile station control, word 2, order, 566
FCC mobile station control, word 2, voice channel assignment, 568
FVC mobile station control, order, 570
FVC mobile station control, voice channel assignment, 572, 574, 576, 578, 579, 580, 581, 583, 584, 585, 586, 587, 588, 589, 591, 593, 595, 597, 599
FVC O Mes, 570
FVC V Mes, 572, 574, 576, 578, 579, 580, 581, 583, 584, 585, 586, 587, 588, 589, 591, 593, 595, 597, 599
MS IntVCh, 568
MS WORD1, 565
MSMessOrd, 566
RECCW A, 521
RECCW B, 523
RECCW C, 525
RECCW D, 526
RECCW E, 527
REG ID, 560
REG INC, 558
registration identification message, 560
registration increment global action, 558
reverse control channel, 521
reverse voice channel, 521
RVCOrdCon, 528, 529, 530, 531, 532, 533, 534, 536
SPC Word 1, 551
SPC Word 2, 553
system parameter overhead, word 1, 551
system parameter overhead, word 2, 553
messages
error, 629
Microsoft® Windows Terminal terminal emulator, 404, 419
MIN
MS id, 510
MRI Ord
CALLP, 517
Multiple Number Measurement
HP-IB command syntax diagram, 197
Multiple Real Number Setting
HP-IB command syntax diagram, 194

N

NAWC, 534, 536
Non-Recoverable Firmware Error, 637
NRVC Ord
CALLP, 517
Number Measurement
HP-IB command syntax diagram, 195

O

Operating Modes
external automatic control, 22, 26
internal automatic control, 22, 24, 27
manual control, 22, 23, 27
operation complete query, *OPC?, 234
Operation Status Register Group, 288
accessing registers contained in, 290
Condition Register bit assignments, 289
Order
Call Control screen, 506
Call Data screen, 543
Oscilloscope
HP-IB command syntax diagram, 172
OTP Memory card, 362, 367
Output Queue Group, 298
accessing the output queue, 299
Overlapped Commands, 66

P

Pacing measurements, 265
pass back control, *PCB, 239
Passing Control, 349
example programs, 353
passing control back automatically, 352
passing control back to another controller, 352
passing control back using PASS CONTROL, 352
passing control to Test Set, 351
requesting control from IBASIC, 353
PC
AdvanceLink (HP 68333F Version B.02.00) terminal emulator, 407, 420
Microsoft® Windows Terminal terminal emulator, 2, 419
ProCommr® Revision 2.4.3 terminal emulator, 2, 420
Serial Port Configuration, 403
Terminal emulator, 403
PCMCIA card (see Memory card), 359, 366, 367, 377
phone number
MS Id, 510
printer
connecting to HP-IB, 39
Procedure files, 370, 457
backing up, 383

ManualsPlus.com

Index

ProCommr® Revision 2.4.3 terminal emulator, 2, 420
Program
  HP-IB command syntax diagram, 177
Program Development
  choosing development method, 409
  IBASIC, 394
  Method #1 - Using external computer, 411
  Method #2 - Using IBASIC EDIT mode, 417
  Method #3 - Using word processor on PC, 421
  methods of, 394
program hangs
  avoiding, 36
PROGram Subsystem, 415, 432
  commands, 434
  executing commands, 450

Q

Questionable Data/Signal Register Group, 302
  accessing registers contained in, 305
  condition register bit assignments, 304

R

Radio Interface
  HP-IB command syntax diagram, 182
RAM Disk, 362, 364
  initializing, 387
  using, 386
RAM_MNG, 386
Real Number Setting
  HP-IB command syntax diagram, 193
recall instrument state, *RCL, 240
Recalling registers
  HP-IB command syntax diagram, 178
RECCW A
  CALLP, 517
  messages, 521
RECCW B
  CALLP, 517
  messages, 523
RECCW C
  CALLP, 517
  messages, 525
RECCW D
  CALLP, 517
  messages, 526
RECCW E
  CALLP, 517
  messages, 527
Register
  HP-IB command syntax diagram, 178
registration identification message, 560
registration increment global action message, 558
reset, *RST, 229
reverse voice channel
  order confirmation message, 528, 529, 530, 531, 532, 533, 534, 536
RF Analyzer
  HP-IB command syntax diagram, 179
RF Generator
  HP-IB command syntax diagram, 181
RJ-11 jack, 396
ROM Disk, 362, 364
  using, 376
ROM Memory card, 362, 367
RVCBSChal
  CALLP, 517
RVCOrd
  CALLP, 517
RVCOrdCon
  CALLP, 517
  messages, 528, 529, 530, 531, 532, 533, 534, 536

S

Sat Tol
  CALL CONFIGURE, 611
save instrument state, *SAV, 240
Save/Recall Registers
  default mass storage locations, 368
Saving registers
  HP-IB command syntax diagram, 178
second word of called address, 527
Sequential Commands, 66
serial number word, 525
Serial Port, 396
  cables/adapters for, 398
  configuration, 396, 401, 429
  input buffer length, 402
  receive/transmit pacing, 402
  select code 10, 397, 429, 431
  select code 9, 397, 401, 429
  serial I/O from IBASIC program, 429
service request enable query, *SRE?, 239
Service Request Enable Register, 331
  clearing, 333
  reading, 332
  writing, 332
service request enable, *SRE, 239
Service Requests, 329
  enabling SRQ interrupts, 330
  procedure for generating, 334
  Service Request Enable Register (see Service Request EnableRegister), 331
  setting up SRQ interrupts, 330
Signaling Decoder
  HP-IB command syntax diagram, 159
Signaling Encoder
  HP-IB command syntax diagram, 98
Special
  HP-IB command syntax diagram, 185
Spectrum Analyzer
  HP-IB command syntax diagram, 183
SRAM Memory card, 362, 366
SRQ (see Service Requests), 329
standard event status enable query, *ESE?, 238
standard event status enable, *ESE, 238
Standard Event Status Register Group, 292
  accessing registers contained in, 293
  bit assignments, 293
standard event status register query, ESR?, 238
Status
  HP-IB command syntax diagram, 186, 187
status byte query, *STB?, 239
Status Byte Register, 277
  bit assignments, 279, 330
  clearing, 281
  reading with serial poll, 280
  reading with STB Common Command, 280
  writing, 281
Status reporting, 275
  Calibration Status Register Group (see

ManualsPlus.com

Calibration StatusRegister Group), 312
Call Processing Status Register Group, 307
clearing the Status Byte Register, 281
Communicate Status Register Group (see Communicate StatusRegister Group), 325
Condition register definition, 283
Enable register definition, 284
Error Message Queue Group (see Error Message Queue Group), 300
Event register definition, 284
Hardware Status Register #1 Group (see Hardware StatusRegister #1 Group), 320
Hardware Status Register #2 Group (see Hardware StatusRegister #2 Group), 316
Operation Status Register Group (see Operation StatusRegister Group), 288
Output Queue Group (see Output Queue Group), 298
Questionable Data/Signal Register Group (see QuestionableData/Signal Register Group), 302
reading Status Byte Register with serial poll, 280
reading Status Byte Register with STB CommonCommand, 280
Standard Event Status Register Group (see Standard EventStatus Register Group), 292
Status Byte Register, 277
status queue model, 286
status register model, 283
status register structure overview, 281
status registers in Test Set, 287
status reporting structure operation, 285
structure overview, 275
Summary Message definition, 284
Transition filter definition, 283
writing the Status Byte Register, 281
Storing code files, 374
System Controller, 350
system parameter overhead word 2 message, 553

T

Terminal Configuration, 408
Test Set
Attribute units - changing, 79
Attribute units - definition, 77
Attribute units - guidelines, 82
Attribute units - querying, 82
default file system, 360
display units - changing, 72
display units - definition, 71
display units - guidelines, 73
display units - querying, 73
file name conflicts, 373
file system, 371
file types, 374
HP-IB units - changing, 75
HP-IB units - definition, 74
HP-IB units - guidelines, 76
HP-IB units - querying, 76
IEEE 488.1 Interface Function Capabilities, 44
IEEE 488.1 Remote Interface Message Capabilities, 46
initializing (see Instrument Initialization), 339
instruments contained in, 23
interfacing to using serial ports, 396
local mode, 49, 50
operating modes, 22
overview, 22
remote mode, 49, 50
remote operation, 43
STATe command - definition, 83
STATe command - guidelines, 84
status registers, 287
units of measure, 71
writing programs for, 22, 27
Tests
HP-IB command syntax diagram, 188
TESTS Subsystem, 455
default mass storage locations, 369
DOS file restrictions, 375
file descriptions, 456
file relationships, 457
screens, 458
writing programs for, 456
TestSet
file name entry field width, 372
file names (see also DOS & LIF file names), 372
Trigger
HP-IB command syntax diagram, 191
HP-IB commands, 262
Trigger - aborting, 262
Trigger event, 258
Trigger modes, 259, 263
affect on measurement speed, 264
default settings, 261
Local/Remote Triggering Changes, 261
retriggering, 259, 263
settings for fastest measurements, 264
settings for most reliable measurements, 264
settling, 260, 263
trigger, *TRG, 239
Triggering measurements, 258
TX Pwr Zero
CALL CONFIGURE screen, 611

U

UniqChCon
CALLP, 517
Uploading programs from Test Set to external controller, 453
Uploading programs from Test Set to PC, 428
Uploading programs to Test Set, 416

V

voice channel assignment, 479
Volume copy, 384

W

wait to complete, *WAI, 237
Wildcards, 360, 385
word
abbreviated address, 521
extended address, 523
first word of called address, 526
number of additional word coming, 534, 536

ManualsPlus.com

reverse voice channel order confirmation message, 528, 529, 530, 531, 532, 533, 534, 536
second word of called address, 527
serial number, 525
Word processor, 421
configuring for program development, 421
transferring programs to Test Set, 423
writing lines of IBASIC code, 422
Write-protect switch, 379

X

Xon/Xoff, 402