Agilent 11982A
Amplified Lightwave Converter
Operation and Service Manual

Agilent Technologies

© Copyright
Agilent Technologies 2000
All Rights Reserved. Reproduction, adaptation, or translation without prior written permission is prohibited, except as allowed under copyright laws.

Agilent Part No. 11982-90014
Printed in USA
July 2000

Agilent Technologies
Lightwave Division
1400 Fountaingrove Parkway
Santa Rosa, CA 95403-1799, USA
(707) 577-1400

Notice.
The information contained in this document is subject to change without notice. Companies, names, and data used in examples herein are fictitious unless otherwise noted. Agilent Technologies makes no warranty of any kind with regard to this material, including but not limited to, the implied warranties of merchantability and fitness for a particular purpose. Agilent Technologies shall not be liable for errors contained herein or for incidental or consequential damages in connection with the furnishing, performance, or use of this material.

Restricted Rights Legend.
Use, duplication, or disclosure by the U.S. Government is subject to restrictions as set forth in subparagraph (c) (1) (ii) of the Rights in Technical Data and Computer Software clause at DFARS 252.227-7013 for DOD agencies, and subparagraphs (c) (1) and (c) (2) of the Commercial Computer Software Restricted Rights clause at FAR 52.227-19 for other agencies.

Warranty.
This Agilent Technologies instrument product is warranted against defects in material and workmanship for a period of one year from date of shipment. During the warranty period, Agilent Technologies will, at its option, either repair or replace products which prove to be defective. For warranty service or repair, this product must be returned to a service facility designated by Agilent Technologies. Buyer shall prepay shipping charges to Agilent Technologies and Agilent Technologies shall pay shipping charges to return the product to Buyer. However, Buyer shall pay all shipping charges, duties, and taxes for products returned to Agilent Technologies from another country.

Agilent Technologies warrants that its software and firmware designated by Agilent Technologies for use with an instrument will execute its programming instructions when properly installed on that instrument. Agilent Technologies does not warrant that the operation of the instrument, or software, or firmware will be uninterrupted or error-free.

Limitation of Warranty.
The foregoing warranty shall not apply to defects resulting from improper or inadequate maintenance by Buyer, Buyer-supplied software or interfacing, unauthorized modification or misuse, operation outside of the environmental specifications for the product, or improper site preparation or maintenance.

No other warranty is expressed or implied. Agilent Technologies specifically disclaims the implied warranties of merchantability and fitness for a particular purpose.

Exclusive Remedies.
The remedies provided herein are buyer's sole and exclusive remedies. Agilent Technologies shall not be liable for any direct, indirect, special, incidental, or consequential damages, whether based on contract, tort, or any other legal theory.

Safety Symbols.
CAUTION

The *caution* sign denotes a hazard. It calls attention to a procedure which, if not correctly performed or adhered to, could result in damage to or destruction of the product. Do not proceed beyond a caution sign until the indicated conditions are fully understood and met.

WARNING

The *warning* sign denotes a hazard. It calls attention to a procedure which, if not correctly performed or adhered to, could result in injury or loss of life. Do not proceed beyond a warning sign until the indicated conditions are fully understood and met.

⚠ The instruction manual symbol. The product is marked with this warning symbol when it is necessary for the user to refer to the instructions in the manual.

The laser radiation symbol. This warning symbol is marked on products which have a laser output.

∿ The AC symbol is used to indicate the required nature of the line module input power.

| The ON symbols are used to mark the positions of the instrument power line switch.

❍ The OFF symbols are used to mark the positions of the instrument power line switch.

The CE mark is a registered trademark of the European Community.

The CSA mark is a registered trademark of the Canadian Standards Association.

The C-Tick mark is a registered trademark of the Australian Spectrum Management Agency.

ISM1-A This text denotes the instrument is an Industrial Scientific and Medical Group 1 Class A product.

Typographical Conventions.
The following conventions are used in this book:

Key type for keys or text located on the keyboard or instrument.

Softkey type for key names that are displayed on the instrument's screen.

`Display type` for words or characters displayed on the computer's screen or instrument's display.

User type for words or characters that you type or enter.

Emphasis type for words or characters that emphasize some point or that are used as place holders for text that you type.

General Safety Considerations

This product has been designed and tested in accordance with IEC Publication 61010-1, Safety Requirements for Electrical Equipment for Measurement, Control and Laboratory Use, and has been supplied in a safe condition. The instruction documentation contains information and warnings that must be followed by the user to ensure safe operation and to maintain the product in a safe condition.

WARNING **If this instrument is not used as specified, the protection provided by the equipment could be impaired. This instrument must be used in a normal condition (in which all means for protection are intact) only.**

WARNING **No operator serviceable parts inside. Refer servicing to qualified personnel. To prevent electrical shock, do not remove covers.**

WARNING **To prevent electrical shock, disconnect the Agilent 11982A from mains before cleaning. Use a dry cloth or one slightly dampened with water to clean the external case parts. Do not attempt to clean internally.**

WARNING **This is a Safety Class 1 product (provided with a protective earthing ground incorporated in the power cord). The mains plug shall only be inserted in a socket outlet provided with a protective earth contact. Any interruption of the protective conductor inside or outside of the product is likely to make the product dangerous. Intentional interruption is prohibited.**

WARNING **For continued protection against fire hazard, replace line fuse only with same type and ratings, (type T 0.315A/250V for 100/120V operation and 0.16A/250V for 220/240V operation). The use of other fuses or materials is prohibited. Verify that the value of the line-voltage fuse is correct.**

- For 100/120V operation, use an IEC 127 5×20 mm, 0.315 A, 250 V, Agilent part number 2110-0449.
- For 220/240V operation, use an IEC 127 5×20 mm, 0.16 A, 250 V, Agilent Technologies part number 2110-0448.

CAUTION Before switching on this instrument, make sure that the line voltage selector switch is set to the line voltage of the power supply and the correct fuse is installed. Assure the supply voltage is in the specified range.

CAUTION This product is designed for use in Installation Category II and Pollution Degree 2 per IEC 1010 and 664 respectively.

CAUTION VENTILATION REQUIREMENTS: When installing the product in a cabinet, the convection into and out of the product must not be restricted. The ambient temperature (outside the cabinet) must be less than the maximum operating temperature of the product by 4°C for every 100 watts dissipated in the cabinet. If the total power dissipated in the cabinet is greater than 800 watts, then forced convection must be used.

CAUTION Always use the three-prong ac power cord supplied with this instrument. Failure to ensure adequate earth grounding by not using this cord may cause instrument damage.

CAUTION *Do not* connect ac power until you have verified the line voltage is correct. Damage to the equipment could result.

CAUTION This instrument has autoranging line voltage input. Be sure the supply voltage is within the specified range.

Measurement accuracy—it's up to you!

Fiber-optic connectors are easily damaged when connected to dirty or damaged cables and accessories. The Agilent 11982A front-panel OPTICAL OUT connector is no exception. When you use improper cleaning and handling techniques, you risk expensive instrument repairs, damaged cables, and compromised measurements.

Before you connect any fiber-optic cable to the Agilent 11982A, refer to "Cleaning Connections for Accurate Measurements" on page 1-9.

Contents

1 General Information
Description of the Agilent 11982A Lightwave Converter 1-2
Accessories 1-4
Agilent 11982A Specifications and Characteristics 1-5
Serial Numbers 1-8
Cleaning Connections for Accurate Measurements 1-9
Electrostatic Discharge Information 1-19

2 Installation and Preparation for Use
Preparing the Agilent 11982A for Use 2-2
Power Cords 2-7
Turning on the Agilent 11982A 2-9

3 Time-Domain Measurements
Connecting the Agilent 11982A to an Oscilloscope 3-2
Changing the Oscilloscope Display Units to Watts of Optical Power 3-4

4 Verification and Service Information
Performing a Verification Check of the Agilent 11982A 4-2
Returning the Instrument for Service 4-4
Agilent Technologies Service Offices 4-7
Service Information 4-8

1

Description of the Agilent 11982A Lightwave Converter 1-2
Accessories 1-4
Agilent 11982A Specifications and Characteristics 1-5
Serial Numbers 1-8
Cleaning Connections for Accurate Measurements 1-9
Electrostatic Discharge Information 1-19

General Information

Description of the Agilent 11982A Lightwave Converter

The Agilent 11982A lightwave converter converts an optical signal to an electrical signal. The Agilent 11982A combines a PIN photodetector for the optical-to-electrical conversion. The electrical signal is amplified with a low-noise preamplifier. The Agilent 11982A provides a general purpose optical-to-electrical converter for lightwave frequency-domain and time-domain measurements and can be used with oscilloscopes, spectrum analyzers, and network analyzers.

The Agilent 11982A covers the wavelengths from 1200 to 1600 nm with dc to 15 GHz (optical) modulating bandwidth. Its 300 volts/watt (nominal) conversion gain and 0.05% input optical reflections, significantly improves sensitivity for characterizing lightwave devices. Each converter comes with a calibration chart of instrument-specific data for frequency response and responsivity to enable correct and accurate measurements.

Figure 1-1. Agilent 11982A Lightwave Converter

Frequency-Domain Measurements with the Agilent 11982A

Used with an electrical spectrum analyzer, the Agilent 11982A displays optical modulation power as a function of frequency. Intensity modulation, distortion, and laser intensity noise can also be displayed and measured. Using frequency-response corrections, you can predict and observe the effects of laser modulation on a system.

Using the Agilent 11982A with an Agilent 11980A fiber-optic interferometer, you can measure laser linewidth. With a gateable modulation source, measurements of chirp and frequency modulation of single-line lasers can also be made.

Time-Domain Measurements with the Agilent 11982A

Combining the dc-coupled Agilent 11982A with an Agilent 83480 or Infiniium DCA gives you capability for optical eye-pattern and impulse-response measurements. Use the results to verify optical and opto-electronic components and optical system level performance. The Agilent 11982A provides dc coupling with 20 dB electrical gain and 15 GHz bandwidth. The Agilent 83480-series and Infiniium DCA have a wide range of bandwidths, low jitter, and the averaging and persistence features needed for time-domain measurements. The Agilent 83480 gives you a wide range of time-domain characterization capabilities including automated eye-diagram measurements, auto-aligning SONET/SDH masks, repeatable extinction-ratio measurements, and Agilent Technologies' Eyeline mode for eye analysis.

Extinction ratio is a critical performance specification for digital optical transmitters. The Agilent 11982A's combination of bandwidth and sensitivity make it extremely useful for eye-diagram measurements, including extinction ratio. However, for best extinction ratio accuracy and repeatability, the combination of the Agilent Infiniium DCA mainframe with an Agilent 86103A, 86105A, 86106A, or 86109A plug-in module is recommended.

See Chapter 3, "Time-Domain Measurements" for more information about eye pattern, extinction ratio, and impulse measurements.

Accessories

Accessories

Connector Interfaces

The Agilent 11982A has a variety of connector interfaces available. You must specify one of the following connector interfaces when ordering your Agilent 11982A:

- Diamond® HMS-10 Connector Interface (Option 011)
- PC/FC Connector Interface (Option 012)
- DIN 47256 Connector Interface (Option 013)
- ST Connector Interface (Option 014)
- Biconic Connector Interface (Option 015)

Agilent 11982A Specifications and Characteristics

Table 1-1 lists specification, *characteristics*, typical performance, and nominal values. The distinction between these terms is described as follows:

- Specifications describe warranted performance over the temperature range 0°C to +55°C (unless otherwise noted). All specifications apply after the instrument's temperature has been stabilized after 30 minutes of continuous operation.
- *Characteristics* provide useful information by giving functional, but nonwarranted, performance parameters. *Characteristics are printed in italics.*
- Typical Performance, where listed, is not *warranted*, but indicates performance which most units will meet.
- Nominal Value indicates the expected, but not *warranted*, value of the parameter.

Table 1-1. Agilent 11982A Specifications and Characteristics

Wavelength Range *(characteristic)*	*1,200 nm to 1,600 nm*
Bandwidth *(characteristic)*	*dc to 15 GHz (optical)* *dc to 11 GHz (electrical)*
Full Width Half Maximum (Calculated from FWHM=0.44/BW optical)	29.4 ps
Conversion Gain	
dc responsivity[a]	> 200 V/W, 300 V/W nominal
Accuracy of provided value	±20%
Noise Equivalent Power [b] *(characteristic)*	*30 pW* $\sqrt{Hz}$
Input Return Loss *(characteristic with HMS-10 connector)*	23 dB
Aberrations *(characteristic)*	*±20% peak-to-peak*
Corrected RF Frequency Response[c] dc to 22 GHz	
20° to 30°C	±2.2 dB[d]
0° to 55°C	±4.7 dB[d]
Harmonic Distortion, Output	
<–10 dBm	> 41 dB[d] below fundamental
Maximum Safe Optical Input Power	
Average	10 mW (+10 dBm)
Maximum Operating Optical Input Power	
Peak	1.5 mW (+1.76 dBm)
Output Voltage Range	
Into 50Ω	> 700 mV
Output Offset Voltage	
Into 50Ω	< 1 mV
Output Electrical Return Loss *(characteristic)*	
0.1 to 12 GHz	*> 11 dB* [d]
12 to 22 GHz	*> 9 dB* [d]

a. Plus or minus the connector variation.
b. Equivalent to 3.7 μW in a 15 GHz bandwidth.
c. Corrections can be obtained from the lightwave personality ROM card or the Agilent 11982A Calibration Chart.
d. Refers to electrical power units.

Table 1-2. Agilent 11982A Specifications and Characteristics

GENERAL SPECIFICATIONS	
Temperature Range	
Operating	0°C to +55°C
Storage	–40°C to +55°C
EMI Compatibility	Conducted and radiated emissions are in compliance with the requirements of FTZ 1046, CISPR Pub. 11 (1975), and MIL-STD-461C, Part 7, Methods CE03 and RE02.
Power Requirements	100, 120, 220, or 240 Vac (±10%), 47 to 63 Hz Power consumption < 75 VA
Weight	3.76 kg (8.4 lb)
Dimensions	A= 213 mm (8.39 inch) B= 102 mm (4.02 inch) C= 368 mm (14.49 inch)

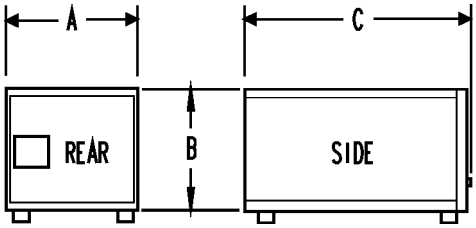

FRONT-PANEL INPUT/OUTPUT	
Optical Input Connector (front panel)	Single-mode fiber connectors: Diamond® HMS-10, FC/PC, ST Biconic, or DIN
Output Connector (front panel)	APC 3.5 mm, male, 50Ω (nominal)

Serial Numbers

Agilent Technologies makes frequent improvements to its products to enhance their performance, usability, or reliability, and to control costs. Agilent Technologies service personnel have access to complete records of design changes to each type of equipment, based on the equipment's serial number. Whenever you contact Agilent Technologies about your lightwave converter, have the complete serial number available to ensure obtaining the most complete and accurate information possible.

A mylar serial-number label is attached to the rear of the lightwave converter. It contains the serial number and the options installed in the lightwave converter. The serial number has two parts: the prefix (the first four numbers and a letter), and the suffix (the last five numbers). See Figure 1-2.

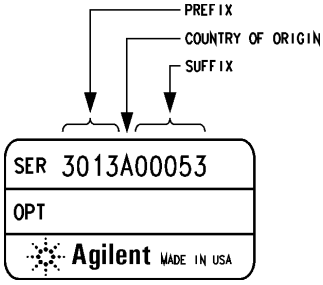

Figure 1-2. Typical Serial Number Label

The first four numbers of the prefix are a code that identifies the date of the last major design change that is incorporated in your lightwave converter. The letter identifies the country in which the unit was manufactured. The five-digit suffix is a sequential number and is different for each unit.

The option section of the serial label contains the option number(s) of the lightwave converter option(s).

Whenever you specify the serial number or refer to it in obtaining information about your lightwave converter, be sure to use the complete number, including the full prefix and the suffix.

Cleaning Connections for Accurate Measurements

Today, advances in measurement capabilities make connectors and connection techniques more important than ever. Damage to the connectors on calibration and verification devices, test ports, cables, and other devices can degrade measurement accuracy and damage instruments. Replacing a damaged connector can cost thousands of dollars, not to mention lost time! This expense can be avoided by observing the simple precautions presented in this book. This book also contains a brief list of tips for caring for electrical connectors.

Choosing the Right Connector

A critical but often overlooked factor in making a good lightwave measurement is the selection of the fiber-optic connector. The differences in connector types are mainly in the mechanical assembly that holds the ferrule in position against another identical ferrule. Connectors also vary in the polish, curve, and concentricity of the core within the cladding. Mating one style of cable to another requires an adapter. Agilent Technologies offers adapters for most instruments to allow testing with many different cables. Figure 1-3 on page 1-10 shows the basic components of a typical connectors.

The system tolerance for reflection and insertion loss must be known when selecting a connector from the wide variety of currently available connectors. Some items to consider when selecting a connector are:

- How much insertion loss can be allowed?
- Will the connector need to make multiple connections? Some connectors are better than others, and some are very poor for making repeated connections.
- What is the reflection tolerance? Can the system take reflection degradation?
- Is an instrument-grade connector with a precision core alignment required?
- Is repeatability tolerance for reflection and loss important? Do your specifica-

tions take repeatability uncertainty into account?

- Will a connector degrade the return loss too much, or will a fusion splice be required? For example, many DFB lasers cannot operate with reflections from connectors. Often as much as 90 dB isolation is needed.

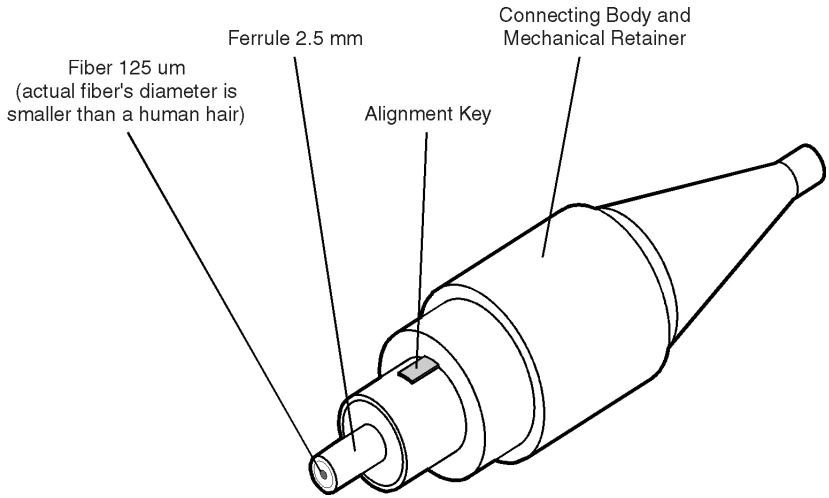

Figure 1-3. Basic components of a connector.

Over the last few years, the FC/PC style connector has emerged as the most popular connector for fiber-optic applications. While not the highest performing connector, it represents a good compromise between performance, reliability, and cost. If properly maintained and cleaned, this connector can withstand many repeated connections.

However, many instrument specifications require tighter tolerances than most connectors, including the FC/PC style, can deliver. These instruments cannot tolerate connectors with the large non-concentricities of the fiber common with ceramic style ferrules. When tighter alignment is required, Agilent Technologies instruments typically use a connector such as the Diamond HMS-10, which has concentric tolerances within a few tenths of a micron. Agilent Technologies then uses a special universal adapter, which allows other cable types to mate with this precision connector. See Figure 1-4.

Figure 1-4. Universal adapters to Diamond HMS-10.

The HMS-10 encases the fiber within a soft nickel silver (Cu/Ni/Zn) center which is surrounded by a tough tungsten carbide casing, as shown in Figure 1-5.

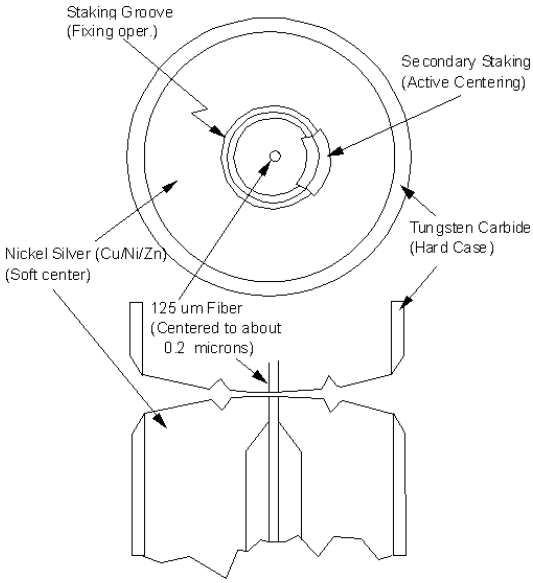

Figure 1-5. Cross-section of the Diamond HMS-10 connector.

The nickel silver allows an active centering process that permits the glass fiber to be moved to the desired position. This process first stakes the soft nickel silver to fix the fiber in a near-center location, then uses a post-active staking to shift the fiber into the desired position within 0.2 µm. This process, plus the keyed axis, allows very precise core-to-core alignments. This connector is found on most Agilent Technologies lightwave instruments.

The soft core, while allowing precise centering, is also the chief liability of the connector. The soft material is easily damaged. Care must be taken to minimize excessive scratching and wear. While minor wear is not a problem if the glass face is not affected, scratches or grit can cause the glass fiber to move out of alignment. Also, if unkeyed connectors are used, the nickel silver can be pushed onto the glass surface. Scratches, fiber movement, or glass contamination will cause loss of signal and increased reflections, resulting in poor return loss.

Inspecting Connectors

Because fiber-optic connectors are susceptible to damage that is not immediately obvious to the naked eye, poor measurements result without the user being aware. Microscopic examination and return loss measurements are the best way to ensure good measurements. Good cleaning practices can help ensure that optimum connector performance is maintained. With glass-to-glass interfaces, any degradation of a ferrule or the end of the fiber, any stray particles, or finger oil can have a significant effect on connector performance. Where many repeat connections are required, use of a connector saver or patch cable is recommended.

Figure 1-6 shows the end of a clean fiber-optic cable. The dark circle in the center of the micrograph is the fiber's 125 µm core and cladding which carries the light. The surrounding area is the soft nickel-silver ferrule. Figure 1-7 shows a dirty fiber end from neglect or perhaps improper cleaning. Material is smeared and ground into the end of the fiber causing light scattering and poor reflection. Not only is the precision polish lost, but this action can grind off the glass face and destroy the connector.

Figure 1-8 shows physical damage to the glass fiber end caused by either repeated connections made without removing loose particles or using improper cleaning tools. When severe, the damage of one connector end can be transferred to another good connector endface that comes in contact with the damaged one. Periodic checks of fiber ends, and replacing connecting cables after many connections is a wise practice.

The cure for these problems is disciplined connector care as described in the following list and in "Cleaning Connectors" on page 1-16.

Use the following guidelines to achieve the best possible performance when making measurements on a fiber-optic system:

- Never use metal or sharp objects to clean a connector and never scrape the connector.
- Avoid matching gel and oils.

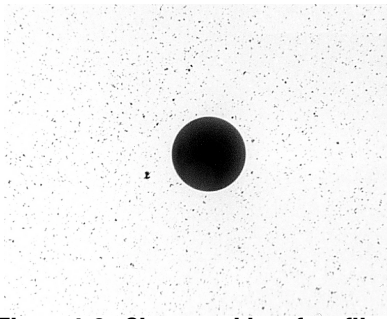

Figure 1-6. Clean, problem-free fiber end and ferrule.

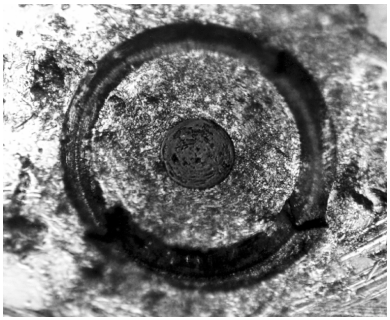

Figure 1-7. Dirty fiber end and ferrule from poor cleaning.

Figure 1-8. Damage from improper cleaning.

While these often work well on first insertion, they are great dirt magnets. The oil or gel grabs and holds grit that is then ground into the end of the fiber. Also, some early gels were designed for use with the FC, non-contacting connectors, using small glass spheres. When used with contacting connectors, these glass balls can scratch and pit the fiber. If an index matching gel or oil must be used, apply it to a freshly cleaned connector, make the measurement, and then immediately clean it off. Never use a gel for longer-term connections and never use it to improve a damaged connector. The gel can mask the extent of damage and continued use of a damaged fiber can transfer damage to the instrument.

- When inserting a fiber-optic cable into a connector, gently insert it in as straight a line as possible. Tipping and inserting at an angle can scrape material off the inside of the connector or even break the inside sleeve of connectors made with ceramic material.
- When inserting a fiber-optic connector into a connector, make sure that the fiber end does not touch the outside of the mating connector or adapter.
- Avoid over tightening connections.

  Unlike common electrical connections, tighter is *not* better. The purpose of the connector is to bring two fiber ends together. Once they touch, tightening only causes a greater force to be applied to the delicate fibers. With connectors that have a convex fiber end, the end can be pushed off-axis resulting in misalignment and excessive return loss. Many measurements are actually improved by backing off the connector pressure. Also, if a piece of grit does happen to get by the cleaning procedure, the tighter connection is more likely to damage the glass. Tighten the connectors just until the two fibers touch.

- Keep connectors covered when not in use.
- Use fusion splices on the more permanent critical nodes. Choose the best connector possible. Replace connecting cables regularly. Frequently measure the return loss of the connector to check for degradation, and clean every connector, every time.

All connectors should be treated like the high-quality lens of a good camera. The weak link in instrument and system reliability is often the inappropriate use and care of the connector. Because current connectors are so easy to use, there tends to be reduced vigilance in connector care and cleaning. It takes only one missed cleaning for a piece of grit to permanently damage the glass and ruin the connector.

Measuring insertion loss and return loss

Consistent measurements with your lightwave equipment are a good indication that you have good connections. Since return loss and insertion loss are key factors in determining optical connector performance they can be used to determine connector degradation. A smooth, polished fiber end should produce a good return-loss measurement. The quality of the polish establishes the difference between the “PC” (physical contact) and the “Super PC” connectors. Most connectors today are physical contact which make glass-to-glass connections, therefore it is critical that the area around the glass core be clean and free of scratches. Although the major area of a connector, excluding the glass, may show scratches and wear, if the glass has maintained its polished smoothness, the connector can still provide a good low level return loss connection.

If you test your cables and accessories for insertion loss and return loss upon receipt, and retain the measured data for comparison, you will be able to tell in the future if any degradation has occurred. Typical values are less than 0.5 dB of loss, and sometimes as little as 0.1 dB of loss with high performance connectors. Return loss is a measure of reflection: the less reflection the better (the larger the return loss, the smaller the reflection). The best physically contacting connectors have return losses better than 50 dB, although 30 to 40 dB is more common.

Visual inspection of fiber ends

Visual inspection of fiber ends can be helpful. Contamination or imperfections on the cable end face can be detected as well as cracks or chips in the fiber itself. Use a microscope (100X to 200X magnification) to inspect the entire end face for contamination, raised metal, or dents in the metal as well as any other imperfections. Inspect the fiber for cracks and chips. Visible imperfections not touching the fiber core may not affect performance (unless the imperfections keep the fibers from contacting).

WARNING

Always remove both ends of fiber-optic cables from any instrument, system, or device before visually inspecting the fiber ends. Disable all optical sources before disconnecting fiber-optic cables. Failure to do so may result in permanent injury to your eyes.

Cleaning Connectors

The procedures in this section provide the proper steps for cleaning fiber-optic cables and Agilent Technologies universal adapters. The initial cleaning, using the alcohol as a solvent, gently removes any grit and oil. If a caked-on layer of material is still present, (this can happen if the beryllium-copper sides of the ferrule retainer get scraped and deposited on the end of the fiber during insertion of the cable), a second cleaning should be performed. It is not uncommon for a cable or connector to require more than one cleaning.

CAUTION

Agilent Technologies strongly recommends that index matching compounds *not* be applied to their instruments and accessories. Some compounds, such as gels, may be difficult to remove and can contain damaging particulates. If you think the use of such compounds is necessary, refer to the compound manufacturer for information on application and cleaning procedures.

Table 1-3. Cleaning Accessories

Item	Agilent Part Number
Pure isopropyl alcohol	—
Cotton swabs	8520-0023
Small foam swabs	9300-1223
Compressed dust remover (non-residue)	8500-5262

Table 1-4. Dust Caps Provided with Lightwave Instruments

Item	Agilent Part Number
Laser shutter cap	08145-64521
FC/PC dust cap	08154-44102
Biconic dust cap	08154-44105
DIN dust cap	5040-9364
HMS10/dust cap	5040-9361
ST dust cap	5040-9366

To clean a non-lensed connector

CAUTION Do not use any type of foam swab to clean optical fiber ends. Foam swabs can leave filmy deposits on fiber ends that can degrade performance.

1. Apply pure isopropyl alcohol to a clean lint-free cotton swab or lens paper.

   Cotton swabs can be used as long as no cotton fibers remain on the fiber end after cleaning.

2. Clean the ferrules and other parts of the connector while avoiding the end of the fiber.
3. Apply isopropyl alcohol to a new clean lint-free cotton swab or lens paper.
4. Clean the fiber end with the swab or lens paper.

   Do *not* scrub during this initial cleaning because grit can be caught in the swab and become a gouging element.

5. Immediately dry the fiber end with a clean, dry, lint-free cotton swab or lens paper.
6. Blow across the connector end face from a distance of 6 to 8 inches using filtered, dry, compressed air. Aim the compressed air at a shallow angle to the fiber end face.

   Nitrogen gas or compressed dust remover can also be used.

CAUTION Do not shake, tip, or invert compressed air canisters, because this releases particles in the can into the air. Refer to instructions provided on the compressed air canister.

7 As soon as the connector is dry, connect or cover it for later use.

If the performance, after the initial cleaning, seems poor try cleaning the connector again. Often a second cleaning will restore proper performance. The second cleaning should be more arduous with a scrubbing action.

To clean an adapter

The fiber-optic input and output connectors on many Agilent Technologies instruments employ a universal adapter such as those shown in the following picture. These adapters allow you to connect the instrument to different types of fiber-optic cables.

Figure 1-9. Universal adapters.

1 Apply isopropyl alcohol to a clean foam swab.

Cotton swabs can be used as long as no cotton fibers remain after cleaning. The foam swabs listed in this section's introduction are small enough to fit into adapters.

Although foam swabs can leave filmy deposits, these deposits are very thin, and the risk of other contamination buildup on the inside of adapters greatly outweighs the risk of contamination by foam swabs.

2 Clean the adapter with the foam swab.

3 Dry the inside of the adapter with a clean, dry, foam swab.

4 Blow through the adapter using filtered, dry, compressed air.

Nitrogen gas or compressed dust remover can also be used. Do not shake, tip, or invert compressed air canisters, because this releases particles in the can into the air. Refer to instructions provided on the compressed air canister.

Electrostatic Discharge Information

Electrostatic discharge (ESD) can damage or destroy electronic components. All work on electronic assemblies should be performed at a static-safe work station. Figure 1-10 shows an example of a static-safe work station using two types of ESD protection:

- Conductive table-mat and wrist-strap combination.
- Conductive floor-mat and heel-strap combination.

Both types, when used together, provide a significant level of ESD protection. Of the two, only the table-mat and wrist-strap combination provides adequate ESD protection when used alone.

To ensure user safety, the static-safe accessories must provide at least 1 MΩ of isolation from ground. Refer to Table 1-5 on page 1-21 for information on ordering static-safe accessories.

WARNING **These techniques for a static-safe work station should not be used when working on circuitry with a voltage potential greater than 500 volts.**

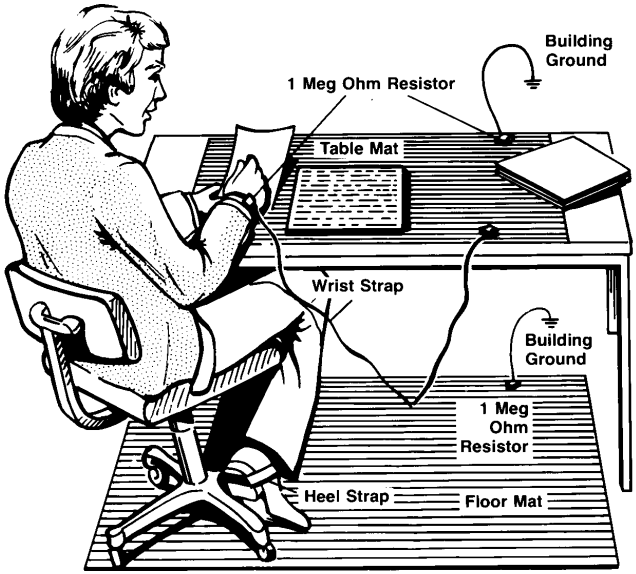

Figure 1-10. Example of a Static-Safe Work Station

Reducing Damage Caused by ESD

The following suggestions may help reduce ESD damage that occurs during testing and servicing operations.

- Before connecting any coaxial cable to an analyzer connector for the first time each day, momentarily ground the center and outer conductors of the cable.
- Personnel should be grounded with a resistor-isolated wrist strap before touching the center pin of any connector and before removing any assembly from the unit.
- Be sure that all instruments are properly earth-grounded to prevent a buildup of static charge.

Test Equipment Use and ESD

- Before connecting any coaxial cable to an instrument connector for the first time each day, momentarily short the center and outer conductors of the cable together.
- Personnel should be grounded with a 1 MΩ resistor-isolated wrist-strap before touching the center pin of any connector and before removing any assembly from the instrument.
- Be sure that all instruments are properly earth-grounded to prevent build-up of static charge.

Table 1-5 on page 1-21 lists static-safe accessories that can be obtained from Agilent Technologies by using the Agilent part numbers shown.

Static-Safe Accessories

Table 1-5. Static-Safe Accessories

Agilent Part Number	Description
9300-0797	Set includes: 3M static control mat 0.6 m× 1.2 m (2 ft × 4 ft) and 4.6 cm (15 ft) ground wire. (The wrist-strap and wrist-strap cord are not included. They must be ordered separately.)
9300-0980	Wrist-strap cord 1.5 m (5 ft)
9300-1383	Wrist-strap, color black, stainless steel, without cord, has four adjustable links and a 7 mm post-type connection.
9300-1169	ESD heel-strap (reusable 6 to 12 months).

2

Preparing the Agilent 11982A for Use 2-2
Initial Inspection 2-2
Connecting the Agilent 11982A to a Power Source 2-4
Power Requirements 2-4
Setting the Line Voltage Selector 2-4
Checking the Fuse 2-5
Power Cable 2-6
Power Cords 2-7
Turning on the Agilent 11982A 2-9

Installation and Preparation for Use

Preparing the Agilent 11982A for Use

Initial Inspection

Inspect the Agilent 11982A shipping container for damage. If the shipping container or cushioning material is damaged, keep it until you have verified that the contents are complete and you have tested the lightwave converter mechanically and electrically.

The Agilent 11982A is packed within a carton as shown in Figure 2-1 on page 2-3. Table 2-1 on page 2-3 contains the description and part numbers of the packaging materials. Table 2-2 on page 2-3 contains the accessories shipped with the lightwave converter. If the contents are incomplete or if the lightwave converter does not pass the verification test (this procedure is provided in Chapter 4, "Verification and Service Information"), notify the nearest Agilent Technologies office. If the shipping container is damaged or the cushioning material shows signs of stress, also notify the carrier. Keep the shipping materials for the carrier's inspection. The Agilent Technologies office will arrange for repair or replacement without waiting for a claim settlement.

If the shipping materials are in good condition, retain them for possible future use. You may wish to ship the lightwave converter to another location or to return it to Agilent Technologies for service. See "Returning the Instrument for Service" on page 4-4.

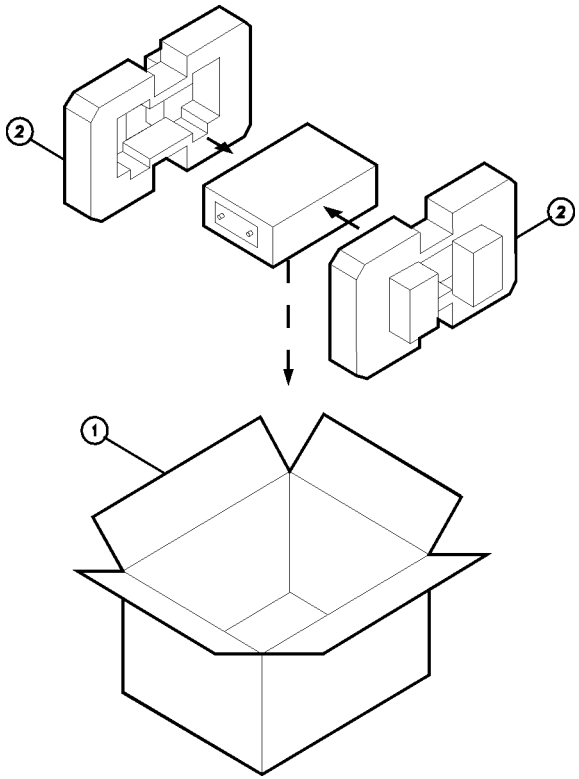

Figure 2-1. Agilent 11982A Packaging

Table 2-1. Packaging Materials

Item	Description	Agilent Part Number
1	Outer Carton	9211-6485
2	Foam Pad Set	9220-4805

Table 2-2. Accessories Supplied with the Agilent 11982A (but not shown)

Description	Agilent Part Number	Comments
Adapter, SMA (f) to (f)	1250-1158	Shipped with the lightwave converter.
Power cable	See Table 2-3 on page 2-4	Shipped with the lightwave converter.

Connecting the Agilent 11982A to a Power Source

The lightwave converter is a portable instrument and requires no physical installation other than connection to a power source.

CAUTION *Do not* connect ac power until you have verified that the line voltage is correct, the proper fuse is installed, and the line voltage selector switch is properly positioned, as described in the following paragraphs. Damage to the equipment could result.

Power Requirements

Table 2-3. Agilent 11982A Power Requirements

Characteristic	Requirement
Input Voltage	100, 120, 220, or 240 V (±10%)
Frequency	47 to 63 Hz
Power	75 VA (maximum)

Setting the Line Voltage Selector

Use the following procedure to set the Agilent 11982A's voltage selector to the voltage range (100, 120, 220, or 240 V) corresponding to the available ac voltage.

CAUTION Before connecting the lightwave converter to the power source, you must set the rear-panel voltage selector correctly to adapt the lightwave converter to the power source. An improper selector setting can damage the lightwave converter when it is turned on.

1 Pry open the fuse holder door with a small screwdriver.

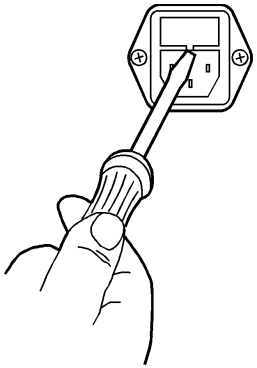

Figure 2-2. Opening the Fuse Holder Door

CAUTION You must remove the voltage tumbler to change the voltage selector. Rotating the voltage tumbler while it is in the line module damages the line module.

2 Remove the voltage tumbler (the voltage tumbler is not attached to the unit).

3 Replace the voltage tumbler so the desired line voltage value shows through the small opening in the fuse holder door.

Checking the Fuse

The recommended fuse is a 0.5 A, 250 V, slow blow, Agilent Technologies part number 2110-0202.

The line fuse is housed in a small container next to the voltage tumbler (see Figure 2-3 on page 2-6). The spare fuse is stored below the line fuse.

To check the fuse, insert the tip of a screwdriver on the side of the container and gently pull outward to remove the container.

If the fuse is defective or missing, install a new fuse in the proper position and reinsert the fuse container.

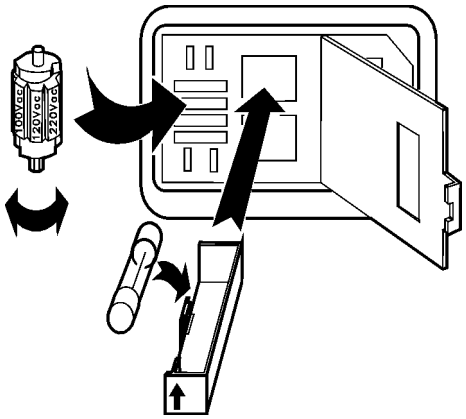

Figure 2-3. Selecting the Line Voltage Value and Checking the Fuse

Power Cable

The lightwave converter is equipped with a three-wire power cable, in accordance with international safety standards. When connected to an appropriate power line outlet, this cable grounds the instrument cabinet.

WARNING

Failure to ground the lightwave converter properly can result in personal injury. Before turning on the lightwave converter, you must connect its protective earth terminals to the protective conductor of the main power cable. Insert the main power cable plug only into a socket outlet that has a protective earth contact. DO NOT defeat the earth-grounding protection by using an extension cable, power cable, or autotransformer without a protective ground conductor. If you are using an autotransformer, make sure its common terminal is connected to the protective earth contact of the power source outlet socket.

Various power cables are available to connect the lightwave converter to the types of ac power outlets unique to specific geographic areas. The cable appropriate for the area to which the lightwave converter is originally shipped is included with the unit. You can order additional ac power cables for use in different areas. "Power Cords" on page 2-7 lists the available ac power cables, illustrates the plug configurations, and identifies the geographic area in which each cable is appropriate.

Power Cords

Plug Type	Cable Part No.	Plug Description	Length (in/cm)	Color	Country
250V 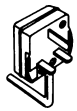	8120-1351 8120-1703	Straight *BS1363A 90°	90/228 90/228	Gray Mint Gray	United Kingdom, Cyprus, Nigeria, Zimbabwe, Singapore
250V	8120-1369 8120-0696	Straight *NZSS198/ASC 90°	79/200 87/221	Gray Mint Gray	Australia, New Zealand
250V 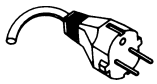	8120-1689 8120-1692 8120-2857p	Straight *CEE7-Y11 90° Straight (Shielded)	79/200 79/200 79/200	Mint Gray Mint Gray Coco Brown	East and West Europe, Saudi Arabia, So. Africa, India (unpolarized in many nations)
125V 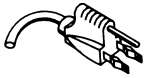	8120-1378 8120-1521 8120-1992	Straight *NEMA5-15P 90° Straight (Medical) UL544	90/228 90/228 96/244	Jade Gray Jade Gray Black	United States, Canada, Mexico, Philippines, Taiwan
250V	8120-2104 8120-2296	Straight *SEV1011 1959-24507 Type 12 90°	79/200 79/200	Mint Gray Mint Gray	Switzerland
220V 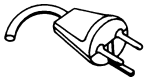	8120-2956 8120-2957	Straight *DHCK107 90°	79/200 79/200	Mint Gray Mint Gray	Denmark

* Part number shown for plug is the industry identifier for the plug only. Number shown for cable is the Agilent Technologies part number for the complete cable including the plug.

Plug Type	Cable Part No.	Plug Description	Length (in/cm)	Color	Country
250V	8120-4211 8120-4600	Straight SABS164 90°	79/200 79/200	Jade Gray	Republic of South Africa India
100V 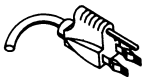	8120-4753 8120-4754	Straight MITI 90°	90/230 90/230	Dark Gray	Japan

* Part number shown for plug is the industry identifier for the plug only. Number shown for cable is the Agilent Technologies part number for the complete cable including the plug.

Turning on the Agilent 11982A

With the power cable inserted into the line module, turn the lightwave converter unit on by pressing the line switch. The green light-emitting diode (LED) should light. If the LED should fail to light, see Chapter 4, “Verification and Service Information”.

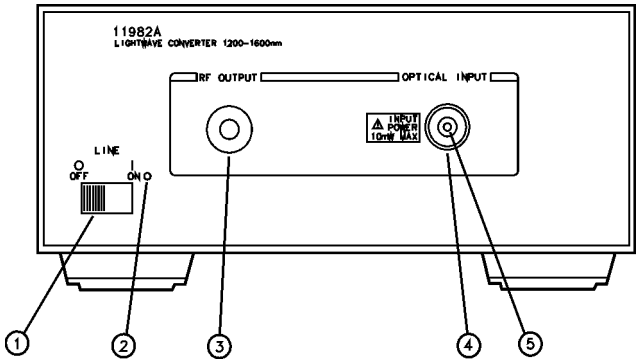

Figure 2-4. The Agilent 11982A Front Panel

Table 2-4. Agilent 11982A Front-Panel Features

Index Number	Description
1	Line Switch.
2	Light-emitting diode (LED).
3	RF OUTPUT connector.
4	OPTICAL INPUT connector (with the interface connector removed).
5	Ferrule.

3

Connecting the Agilent 11982A to an Oscilloscope 3-2
Changing the Oscilloscope Display Units to Watts of Optical Power 3-4

Time-Domain Measurements

Connecting the Agilent 11982A to an Oscilloscope

To connect the Agilent 11982A to an oscilloscope, perform the following steps:

1. If you have not done so already, read Chapter 2, "Installation and Preparation for Use" for instructions about connecting the Agilent 11982A to an ac power supply.
2. Connect an SMA or APC 3.5 mm adapter to the Agilent 11982A RF OUTPUT.

> **Note**
>
> The SMA female-to-female adapter that is shipped with the Agilent 11982A has been provided as a "connector saver." Connecting cables to the SMA adapter instead of directly to the Agilent 11982A's RF OUTPUT connector avoids excessive wear of the RF OUTPUT connector.

3. Connect the RF OUTPUT of the Agilent 11982A to the selected input channel of the oscilloscope with an SMA or semi-rigid coax cable.
4. Clean the optical connectors. "Cleaning Connections for Accurate Measurements" on page 1-9.
5. Connect the optical connector interface to the OPTICAL INPUT. Notice that the connector interface has a small protrusion. This protrusion fits in the slot of the OPTICAL INPUT connector.
6. Attach the fiber-optic cable to the connector interface.
7. Connect the laser source to the fiber-optic cable.
8. Turn on the equipment. The lightwave converter should warm up for 30 minutes before use.

CAUTION Do not exceed the maximum input to the Agilent 11982A's OPTICAL INPUT. The maximum input power is shown on the front panel of the Agilent 11982A.

NOTE

Consult the oscilloscope documentation for information about calibrating and operating the oscilloscope.

Changing the Oscilloscope Display Units to Watts of Optical Power

Since an oscilloscope displays voltage, a conversion factor must be used so the oscilloscope read out is in watts. For the oscilloscope to display optical power, the voltage responsivity (also called the conversion gain) of the Agilent 11982A must be taken into account. The probe attenuation field is not available with some oscilloscopes. The oscilloscope display can still be converted to watts by dividing the oscilloscope's reading (in volts) by the responsivity.

To change the oscilloscope's display units to watts, you must perform the following steps:

1. Determine the responsivity of your Agilent 11982A for the wavelength of the source. The responsivity of the Agilent 11982A is on the Agilent 11982A Calibration Chart shipped with your instrument and shown in Figure 3-1 on page 3-5. The responsivity is calibrated at two wavelengths: 1300 nm and 1550 nm.
2. Determine the reciprocal of the responsivity.
3. Enter the reciprocal of the responsivity in the oscilloscope's probe attenuation field.

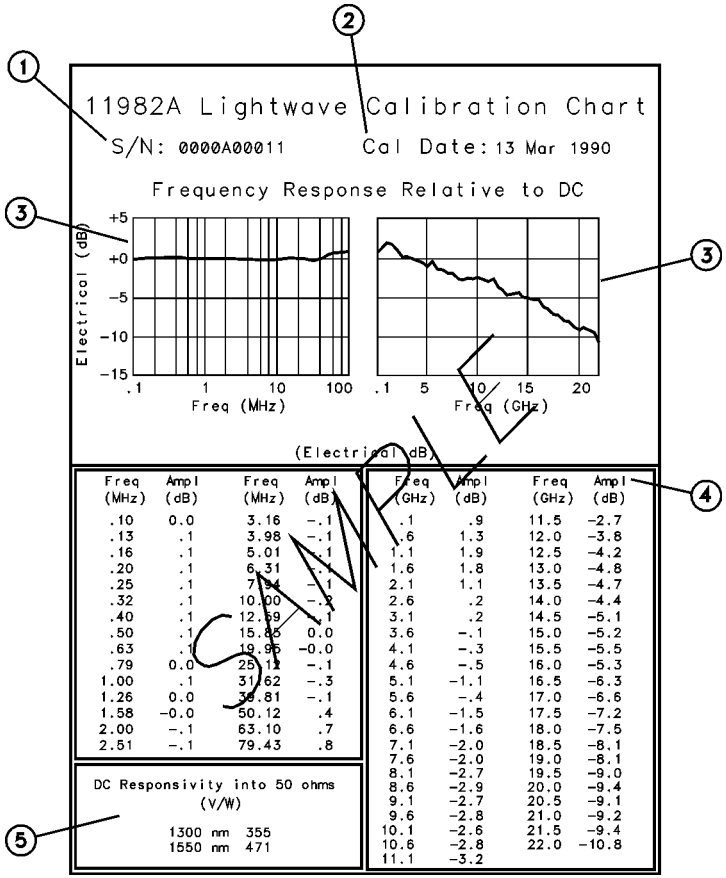

Figure 3-1. The Agilent 11982A Calibration Chart

Table 3-1. The Agilent 11982A Calibration Chart

Index Number	Description
1	Serial number of the Agilent 11982A.
2	Calibration date of the Agilent 11982A.
3	Frequency response of the Agilent 11982A in dB.
4	The amplitude corrections at specific frequencies.
5	Responsivity at 1300 nm and 1550 nm wavelengths.

4

Performing a Verification Check of the Agilent 11982A 4-2
If the Agilent 11982A verification check fails 4-3
Returning the Instrument for Service 4-4
Preparing the instrument for shipping 4-4
Agilent Technologies Service Offices 4-7
Service Information 4-8
General Information 4-8
Adjustment Procedure 4-10
Troubleshooting 4-11
Replacement Procedures 4-12
Replaceable Parts 4-16
Part Ordering Information 4-16

Verification and Service Information

Performing a Verification Check of the Agilent 11982A

To verify the dc responsivity and functionality of the Agilent 11982A, use the following procedure. Remember that the fiber-optic connections must be clean.

1. Connect a laser with a wavelength of 1300 or 1550 nm (approximate) to an optical power meter, and measure the output power of the laser.
2. Connect the RF OUTPUT of the Agilent 11982A lightwave converter to a 50Ω load in parallel with a voltmeter (for example, an Agilent 3456A digital voltmeter).
3. Using the dc volts setting, measure the output voltage across the 50Ω load from the Agilent 11982A *without* the laser connected to its input. This voltage represents the output offset voltage and it should be within the specifications in Table 1-1 on page 1-6.
4. Connect the laser to the OPTICAL INPUT of the Agilent 11982A lightwave converter.
5. Using the dc volts setting, measure the output voltage across the 50Ω load from the Agilent 11982A *with* the laser connected to its input.
6. Subtract the result of Step 3 from Step 5.
7. Compute the dc responsivity for the Agilent 11982A by dividing the voltage from Step 6 by the optical power.

> **Note**
>
> If necessary, convert the scale of the voltage or watts so that the units are comparable. For example, divideμV byμW, not V byμW.

Compare this to the value provided on the Agilent 11982A Calibration Chart for your unit. It should be within the tolerance specified in Table 1-1 on page 1-6.

If the Agilent 11982A verification check fails

If the Agilent 11982A does not pass the verification check, you should recheck what was being done when the problem occurred. A few minutes spent performing some simple checks may save waiting for your instrument to be repaired. Before calling Agilent Technologies or returning the unit for service, please make the following checks:

1. Is the rear-panel voltage selector switch set correctly?
2. Is the line fuse good?
3. Does the line socket have power?
4. Is the unit plugged in to the proper ac power source?
5. Is the unit turned on? Check that the green light-emitting diode (LED) next to the line switch is on, indicating that the power supply is on.
6. If other equipment, cables, and connectors are being used with the Agilent 11982A, are they connected properly and operating correctly?
7. Review the procedure for the test being performed when the problem appeared. Are all the settings correct?
8. Are the connectors clean? See "Cleaning Connections for Accurate Measurements" on page 1-9 for more information about cleaning the connectors.

If the Agilent 11982A still fails, you have two options:

- Return the lightwave converter to Agilent Technologies for repair; if the lightwave converter is still under warranty or is covered by an Agilent Technologies maintenance contract, it will be repaired under the terms of the warranty or plan (the warranty is at the front of this manual). If the lightwave converter is no longer under warranty or is not covered by an Agilent Technologies maintenance plan, Agilent Technologies will notify you of the cost of the repair after examining the unit. See "Returning the Instrument for Service" on page 4-4 for more information.
- Repair it yourself. See "Service Information" on page 4-8.

Returning the Instrument for Service

The instructions in this section show you how to properly return the instrument for repair or calibration. Always call the Agilent Technologies Instrument Support Center first to initiate service *before* returning your instrument to a service office. This ensures that the repair (or calibration) can be properly tracked and that your instrument will be returned to you as quickly as possible. Call this number regardless of where you are located. Refer to "Agilent Technologies Service Offices" on page 4-7 for a list of service offices.

Agilent Technologies Instrument Support Center . . . . . (800) 403-0801

If the instrument is still under warranty or is covered by an Agilent Technologies maintenance contract, it will be repaired under the terms of the warranty or contract (the warranty is at the front of this manual). If the instrument is no longer under warranty or is not covered by an Agilent Technologies maintenance plan, Agilent Technologies will notify you of the cost of the repair after examining the unit.

When an instrument is returned to a Agilent Technologies service office for servicing, it must be adequately packaged and have a complete description of the failure symptoms attached. When describing the failure, please be as specific as possible about the nature of the problem. Include copies of additional failure information (such as the instrument failure settings, data related to instrument failure, and error messages) along with the instrument being returned.

Preparing the instrument for shipping

1 Write a complete description of the failure and attach it to the instrument. Include any specific performance details related to the problem. The following

information should be returned with the instrument.

- Type of service required.
- Date instrument was returned for repair.
- Description of the problem:
  - Whether problem is constant or intermittent.
  - Whether instrument is temperature-sensitive.
  - Whether instrument is vibration-sensitive.
  - Instrument settings required to reproduce the problem.
  - Performance data.
- Company name and return address.
- Name and phone number of technical contact person.
- Model number of returned instrument.
- Full serial number of returned instrument.
- List of any accessories returned with instrument.

2 Cover all front or rear-panel connectors that were originally covered when you first received the instrument.

CAUTION Cover electrical connectors to protect sensitive components from electrostatic damage. Cover optical connectors to protect them from damage due to physical contact or dust.

CAUTION Instrument damage can result from using packaging materials other than the original materials. Never use styrene pellets as packaging material. They do not adequately cushion the instrument or prevent it from shifting in the carton. They may also cause instrument damage by generating static electricity.

3 Pack the instrument in the original shipping containers. Original materials are available through any Agilent Technologies office. Or, use the following guidelines:

- Wrap the instrument in antistatic plastic to reduce the possibility of damage caused by electrostatic discharge.
- For instruments weighing less than 54 kg (120 lb), use a double-walled, corrugated cardboard carton of 159 kg (350 lb) test strength.
- The carton must be large enough to allow approximately 7 cm (3 inches) on all sides of the instrument for packing material, and strong enough to accommodate the weight of the instrument.
- Surround the equipment with approximately 7 cm (3 inches) of packing material, to protect the instrument and prevent it from moving in the carton. If packing foam is not available, the best alternative is S.D-240 Air Cap™ from

Sealed Air Corporation (Commerce, California 90001). Air Cap looks like a plastic sheet filled with air bubbles. Use the pink (antistatic) Air Cap™ to reduce static electricity. Wrapping the instrument several times in this material will protect the instrument and prevent it from moving in the carton.

4 Seal the carton with strong nylon adhesive tape.

5 Mark the carton “FRAGILE, HANDLE WITH CARE”.

6 Retain copies of all shipping papers.

Agilent Technologies Service Offices

Before returning an instrument for service, call the Agilent Technologies Instrument Support Center at (800) 403-0801, visit the Test and Measurement Web Sites by Country page at http://www.tm.agilent.com/tmo/country/English/index.html, or call one of the numbers listed below.

Agilent Technologies Service Numbers

Austria	01/25125-7171
Belgium	32-2-778.37.71
Brazil	(11) 7297-8600
China	86 10 6261 3819
Denmark	45 99 12 88
Finland	358-10-855-2360
France	01.69.82.66.66
Germany	0180/524-6330
India	080-34 35788
Italy	+39 02 9212 2701
Ireland	01 615 8222
Japan	(81)-426-56-7832
Korea	82/2-3770-0419
Mexico	(5) 258-4826
Netherlands	020-547 6463
Norway	22 73 57 59
Russia	+7-095-797-3930
Spain	(34/91) 631 1213
Sweden	08-5064 8700
Switzerland	(01) 735 7200
United Kingdom	01 344 366666
United States and Canada	(800) 403-0801

Service Information

This section describes how to service the Agilent 11982A. It contains the following service information:

- General Information.
- Adjustment Procedure.
- Troubleshooting.
- Replacement Procedures.
- Replaceable Parts.

General Information

Serial-Number Information

Whenever you contact Agilent Technologies about your lightwave converter, have the complete serial number and option designation available. This will ensure that you obtain accurate service information. See "Serial Numbers" on page 1-8 for more information.

Manual Updating Supplement

Manual Updating Supplements are periodically produced by the Agilent Technologies to maintain manual accuracy. The updating supplement provides service information that has not yet been incorporated into a revised manual. If a Manual Updating Supplement has been produced for a specific version of the manual, it will be shipped with the manual.

Any changes that affect information in this manual are documented in the Manual Updating Supplement for this manual. This may include information for instruments manufactured after this manual was printed. The Manual Updating Supplement may also contain information for correcting errors in the manual.

To keep your manual as accurate as possible, periodically request the latest Manual Updating Supplement from your nearest Agilent Technologies Service Office.

Safety Considerations

Before servicing this lightwave converter, familiarize yourself with the safety markings on the instrument and the safety instructions in this manual. This instrument has been manufactured and tested according to international safety standards. To ensure safe operation of the instrument and the personal safety of the user and service personnel, the cautions and warnings in this manual must be heeded.

Refer to the summary of safety considerations at the front of this manual. Individual chapters also contain detailed safety notation.

WARNING

Failure to ground the lightwave converter properly can result in personal injury, as well as instrument damage.

Before turning on the lightwave converter, connect a three-wire power cable with a standard IEC 320-C13 (CEE 22-V) inlet plug to the lightwave converter power receptacle. The power cable outlet plug must be inserted into a power-line outlet socket that has a protective earth-contact. DO NOT defeat the earth-grounding protection by using an extension cable, power cable, or autotransformer without a protective ground conductor.

If you are using an autotransformer, make sure its common terminal is connected to the protective ground conductor of its power-source outlet socket.

Reliability Considerations

The lightwave-converter input circuitry can be damaged by power levels that exceed the maximum safe input-level specifications. Table 1-1 on page 1-6 provides the input specifications. To prevent input damage, these specified levels must not be exceeded.

Protection from Electrostatic Discharge

Electrostatic discharge (ESD) can damage or destroy electronic components. All work on electronic assemblies should be performed at a static-safe work station. See “Electrostatic Discharge Information” on page 1-19 for more information on preventing ESD.

Required Service Tools

Table 4-1 on page 4-10 lists the tools that may be required to service the Agilent 11982A.

Table 4-1. Required Tools

Description	Agilent Part Number	Check Digit
Small Pozidriv screwdriver	8710-0899	0
Large Pozidriv screwdriver	8710-0900	4
Wire cutter	8710-0012	9
Long-nose pliers	8710-0030	1
5/16 nut driver	8720-0015	3
3/8 nut driver	8720-0005	1
7 mm nut driver	8710-1217	8

Adjustment Procedure

The only adjustment for the Agilent 11982A is the +5.7 V dc voltage supply. To adjust the power supply, use an Agilent 3456A digital multimeter (or equivalent) to measure the dc output voltage at the power supply terminals. If the dc output voltage is not within tolerance, adjust the power supply.

WARNING **Only trained service personnel should perform measurements inside the instrument chassis. Use extreme care; the exposed terminals on the power supply transformer carry ac line voltage; you can be killed or seriously injured if you contact them when power is applied.**

1. On the power supply board, connect the multimeter between the –OUT terminal (ground) and the +OUT terminal of E2 on the dc power supply.
2. Measure the power supply output voltage. The voltage reading should be +5.7 V dc ±50 mV.

Note

The +5 V power supply circuit has current-limiting and overvoltage control. If the +5 V power supply is adjusted above +5.8 V (approximate), the +5 V power supply will shutdown.

3 If the voltage reading is not +5.7 V dc, adjust the +5V ADJ potentiometer (R12) for a reading of +5.7 V dc ±50 mV.

Troubleshooting

The main functional blocks of the Agilent 11982A are the power supply, the photodetector and the electrical amplifier unit.

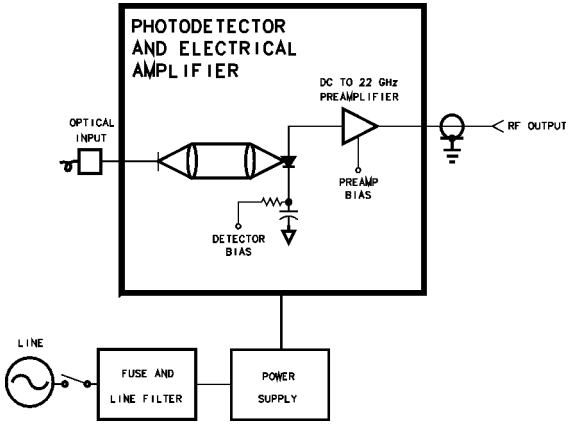

Figure 4-1. Agilent 11982A Block Diagram

The Photodetector and the Electrical Amplifier Unit

Modulated light enters the photodetector through a single mode fiber front-panel connector. Light is collimated, then focused onto a PIN photodetector. Photons are absorbed in the photodetector. Electron-hole pairs are generated by the light, which produces the photocurrent. The photocurrent is amplified by the dc to 22 GHz preamplifier. If the photodetector and electrical amplifier unit fails, the Agilent 11982A must be returned to Agilent Technologies for service.

Troubleshooting the Power Supply

If the +5 V power supply output voltage is low, the power supply could be in a current-limiting or overvoltage crowbar mode. If the power supply is too low, use the R12 potentiometer to decrease the voltage, then cycle the power of the Agilent 11982A. Decreasing the voltage and cycling the power may bring the power supply back to normal operation. If the power supply output voltage cannot be brought within tolerance, disconnect the power supply from the photodetector and electrical amplifier unit, and recheck the +5 V power supply. If the power supply is still low, replace the power supply. If the power sup-

ply is operational, suspect the photodetector and the electrical amplifier unit. The amplifier unit and the optical input connector cannot be replaced; if defective, the Agilent 11982A must be returned to Agilent Technologies for service.

The –12 V and +12 V power supplies are *not* adjusted. The voltages on the power supply terminals are described in Table 4-2.

Table 4-2. Voltages on the dc Power Supply Terminals

Terminal	Description	Voltage
E2, –OUT	Common ground	0 V dc
E2, +OUT	+5 V power supply	+5.7 V dc ±50 mV
E1, –OUT	–12 V power supply	–12 V dc (approximate)
E1, COM	Common ground	0 V dc
E1, +OUT	+12 V power supply	+12 V dc (approximate)

Replacement Procedures

This section contains the replacement procedures for the following assemblies:

- RF Cable and RF connector.
- AC cable assembly.
- Power supply.

Note

The optical input connector and the amplifier unit must be replaced by Agilent Technologies. If the optical input connector or the photodetector and electrical amplifier unit fail, the Agilent 11982A must be sent to Agilent Technologies for service.

CAUTION This instrument contains static-sensitive components. Read "Electrostatic Discharge Information" on page 1-19 before removing any assemblies.

Replacing the RF Cable or the RF Connector

When replacing the RF cable or RF output connectors, use the appropriate torque value. See Table 4-3.

CAUTION Avoid bending or distorting any semirigid cables when removing or reinstalling assemblies. Before removing an assembly, always loosen both ends of any semirigid cable attached to the assembly. When reinstalling cables, tighten to specified torque only. If a torque-measuring tool is not available, make semirigid cable connections finger-tight only. Do not overtighten!

Note

Replacing the RF cable or the RF connector may cause the Agilent 11982A to no longer meet the specifications and characteristics shown in Table 1-1 on page 1-6. The RF cable and RF connector must be replaced *carefully* to minimize the risk of the Agilent 11982A failing specifications. To be sure that it does meet specifications, you should return the Agilent 11982A to Agilent Technologies for recalibration.

Table 4-3. Torque Values

Description	Tool Size	Torque
Nut RF OUTPUT SMA connectors	1/2 inch	25 inch-pounds
SMA cable connections	5/16 inch	10 inch-pounds

Replacing the ac Cable Assembly

The ac cable assembly consists of the line module, the line switch, and the cable harness. When replacing the ac cable assembly, unsolder the connections to the dc power supply. Remove the line module. Remove the line switch. See Figure 4-2 on page 4-14 and Table 4-4 on page 4-14 when installing a new ac cable assembly.

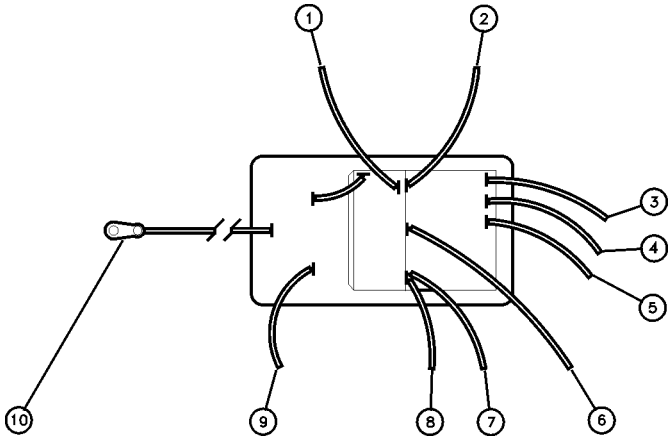

Figure 4-2. Wiring Diagram for the Line Module

Table 4-4. Line Module to DC Power Supply Connections

Index Number	Cable Attachment (from the Line Module)	Cable Color
1	ac power harness	White/brown/gray
2	ac power harness	Gray
3	dc power supply (labeled 5)	White
4	dc power supply (labeled 4)	Yellow
5	dc power supply (labeled 3)	Orange
6	dc power supply (labeled 2)	Red
7	dc power supply (labeled 1)	Blue
8	ac power harness	White/gray/red
9	ac power harness	White/gray
10	(Terminal solder lug) bottom of rear panel	—

Replacing the Power Supply

Unsolder the connections to the dc power supply. Remove the four screws that attach the power supply to the chassis. Use Figure 4-3 and Table 4-5 when installing a new power supply.

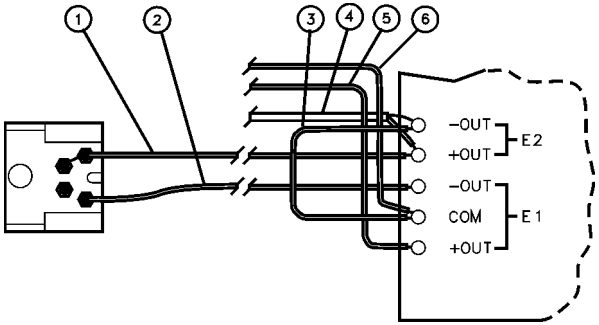

Figure 4-3. Wiring Diagram for the Power Supply Terminals

Table 4-5. DC Power Supply Terminal Connections

Index Number	Cable Attachment	Cable Color
1	E2 +OUT to the photodetector and electrical amplifier unit	Red
2	E1 –OUT to the photodetector and electrical amplifier unit	Green
3	E2 –OUT to E1 COM	Black
4	RF coax cable shielding to E2 –OUT	—
	RF coax cable inner conductor to E2 +OUT	—
5	E1 +OUT to LED anode	Orange
6	E1 COM to LED cathode	Yellow

Replaceable Parts

This section contains information for identifying and ordering replacement assemblies and mechanical parts for the Agilent 11982A lightwave converter.

Replaceable Parts Table Format

Table 4-6 on page 4-19 lists information for each major assembly and for each major mechanical and electrical part that is not part of a major assembly. Table 4-7 on page 4-21 lists information for the Agilent 11982A replaceable hardware. The following information is listed in Table 4-6 and Table 4-7:

1 Item number of callout in Figure 4-4 on page 4-18, Figure 4-5 on page 4-20, or Figure 4-6 on page 4-20.

2 Agilent Technologies part number.

3 Part number check digit (CD).

4 Description of the assembly.

Part Ordering Information

To order an assembly or mechanical part listed in this chapter, quote the Agilent Technologies part number and the check digit, and indicate the quantity required. The check digit is used to verify the correct part number. The check digit will ensure accurate processing of your order.

To order a part that is not listed, include the following information with the order:

- Lightwave converter model number.
- Lightwave converter serial number.
- Description of where the part is located, what it looks like, and its function (if known).
- Quantity needed.

Parts can be ordered by addressing the order to the nearest Agilent Technologies office. Customers within the USA can also use either the direct mail-order system or the direct phone-order system described below. The direct phone-order system has a toll-free phone number available.

Direct Mail-Order System

Within the USA, Agilent Technologies can supply parts through a direct mail-order system. Advantages of using the system are as follows:

- Direct ordering and shipment from Agilent Technologies.
- No maximum or minimum on any mail order. (There is a minimum order amount for parts ordered through a local Agilent Technologies office when the orders require billing and invoicing.)
- Prepaid transportation. (There is a small handling charge for each order.)
- No invoices.

To provide these advantages, a check or money order must accompany each order. Mail-order forms and specific ordering information are available through your local Agilent Technologies office.

Direct Phone-Order System

Within the USA, a phone order system is available for regular and hotline replacement parts service. A toll-free phone number is available, and Mastercard and Visa are accepted.

Regular Orders

The toll-free phone number, (800) 227-8164, is available Monday through Friday, 6 am to 5 pm (Pacific time). Regular orders have a 4-day delivery time.

Hotline Orders

Hotline service is available 24 hours a day, 365 days a year, for emergency parts ordering. The toll-free phone number, (800) 227-8164, is available Monday through Friday, 6 am to 5 pm (Pacific time). After-hours and on holidays, call (415) 968-2347.

To cover the cost of freight and special handing, there is an additional hotline charge on each order (three line items maximum per order). Hotline orders are normally delivered the next business day after they are ordered.

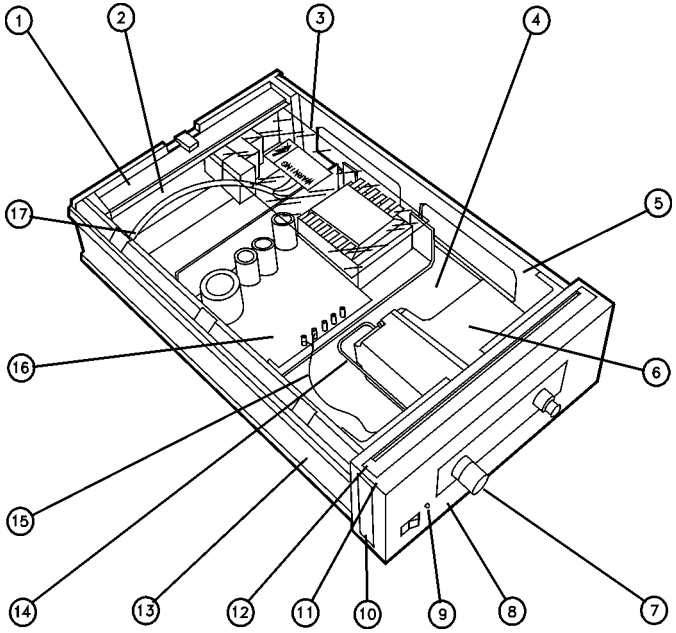

Figure 4-4. Agilent 11982A Assembly Level Replaceable Parts

Table 4-6. Assembly-Level Replaceable Parts

Index Number	Agilent Part Number	CD	Description
1	5021-5814	5	REAR FRAME
2	08449-00002	5	PANEL, REAR
3	11982-00003	9	INSULATOR
4	11982-00004	0	DECK
5	5021-5830	5	SIDE STRUT
6	5086-7863	4	PHOTODETECTOR AND ELECTRICAL AMPLIFIER UNIT
7	08673-60040	9	RF CONNECTOR
8	11982-00001	7	FRONT PANEL, DRESS
9	1990-1238	8	LED, GREEN
	85680-40004	6	LED MOUNT (NOT SHOWN)
10	5001-0538	8	TRIM, SIDE
11	5021-8413	6	FRONT FRAME
	11982-00002	8	FRONT PANEL, SUB (NOT SHOWN)
12	5041-8803	0	TRIM, TOP
13	5062-3805	6	SIDE COVER
14	11982-20002	0	CABLE, RF
15	11982-60001	3	DC CABLE ASSEMBLY (INCLUDES THE RF COAX CABLE)
16	0950-2099	6	POWER SUPPLY
17	11982-60002	4	AC CABLE ASSEMBLY (INCLUDES THE LINE SWITCH AND LINE MODULE)
	5041-8801	8	FOOT, BOTTOM FRONT (NOT SHOWN)
	1460-1345	5	TILT STANDS FOR FRONT FEET (NOT SHOWN)
	5041-8822	3	FOOT, BOTTOM REAR (NOT SHOWN)
	5062-3729	3	TOP COVER (NOT SHOWN)
	5062-3887	4	BOTTOM COVER (NOT SHOWN)
	2110-0202	1	FUSE (NOT SHOWN)
	0890-0732	2	SHRINK TUBING (NOT SHOWN)
	1400-0249	0	TY-RAP (NOT SHOWN)

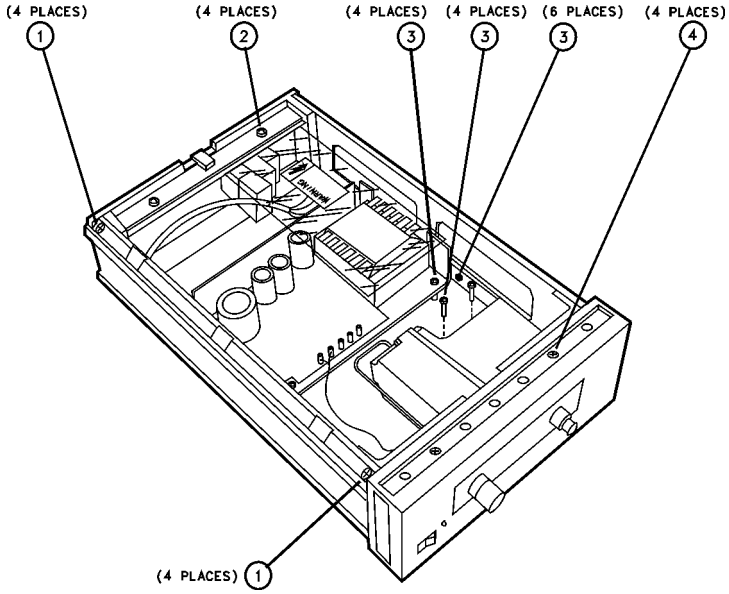

Figure 4-5. Agilent 11982A Replaceable Hardware

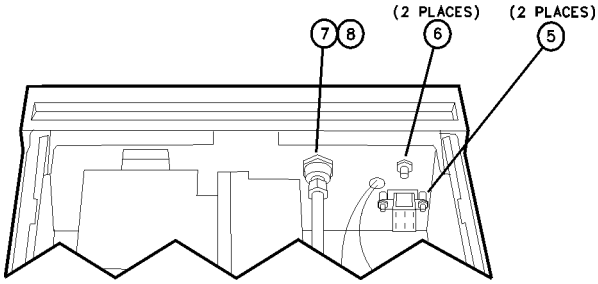

Figure 4-6. Back of Front Frame

Table 4-7. Replaceable Hardware

Index Number	Agilent Part Number	CD	Description
1	0515-1331	5	SCREW, MACH M4.0 X 6MM FLAT-HD
2	0515-0866	9	SCREW, MACH M3.0 X 8MM PAN-HD
3	0515-1090	3	SCREW, MACH M3.5 X 8MM PAN-HD
4	0515-0889	6	SCREW, MACH M3.5 X 6MM FLAT-HD
5	0380-0019	7	STANDOFFS (NUTS AND LOCK WASHERS ARE INCLUDED WITH THE AC CABLE ASSEMBLY)
6	0535-0082	3	HEX NUT WITH LOCK WASHER, 7 MM
7	2190-0016	3	LOCK WASHER
8	2950-0001	8	HEX NUT, 3/8 X 32

Index

A
ac power cables, 2-6
accessories
  connector interfaces, 1-4
  shipped with the lightwave converter, 2-3
adjustment procedure, 4-10
Agilent Technologies
  maintenance contract, 4-3
  offices, 4-7
assembly-level replaceable parts, 4-18

B
before servicing the Agilent 11982A, 4-3
Biconic connector interface, 1-4

C
cabinet, cleaning, iii
changing the oscilloscope display units to watts, 3-4
characteristics, 1-5
check digit, 4-16
checking the fuse, 2-5
classification, product, iii
cleaning
  adapters, 1-18
  cabinet, iii
  fiber-optic connections, 1-9, 1-17
  non-lensed connectors, 1-17
compressed dust remover, 1-16
connecting the Agilent 11982A to an oscilloscope, 3-2
connector
  care, 1-9
  interfaces, 1-4
cotton swabs, 1-16
crowbar, overvoltage mode, 4-11
current-limiting, 4-11

D
description
  Agilent 11982A lightwave converter, 1-2
Diamond connector interface, 1-4
DIN 47256 connector interface, 1-4
dust caps, 1-17

E
electrostatic discharge, 1-19
  accessories, 1-19
  precautions, 1-19
  protection, 1-19
EMI compatibility, 1-7
ESD, 1-19
  reducing damage caused by ESD, 1-20
  static-safe work station, 1-19

F
fiber optics
  cleaning connections, 1-9
  connectors, covering, 4-5
foam swabs, 1-16
front-panel features, 2-9
fuse, 2-5
  values, iii
fuse holder door, 2-5

H
hotline orders, 4-17

I
IEC Publication 61010-1, iii
initial inspection, 2-2
input
  connector, 1-9
  voltage, 2-4
instrument, returning for service, 4-4

L
light-emitting diode, 2-9
lightwave converter, 1-2
line frequency, 2-4
line voltage
  range, 2-4
  selector, 2-4
line-power
  cables, 2-7
low voltage
  servicing, 4-11

M
manual updating supplement, 4-8
measurement accuracy, iv
measuring responsivity, 4-2

O
opening the fuse holder door, 2-5
OPTICAL OUT connector, iv
overvoltage, servicing, 4-11

P
packaging, 2-2
  for shipment, 4-5
part ordering information, 4-16
PC/FC connector interface, 1-4
power cable, 2-6
power requirements, 2-4
power supply
  adjustment, 4-10
  service, 4-15

R
regular orders, 4-17
reliability considerations, 4-9
repair options, 4-3
replaceable parts, 4-16
replacement procedures, 4-12
replacing
  the ac cable assembly, 4-13
  the line module, 4-13
  the power supply, 4-15
responsivity
  determining, 4-2
  testing, 4-2
returning for service, 4-4
RF cable or connector, servicing, 4-13

S
safety, iii
  considerations, 4-9
  laser classification, iii
sales and service offices, 4-7
serial numbers, 1-8
service, 4-4
  assembly-level parts, 4-18
  information, 4-8
  options, 4-3
  power supply replacement, 4-15
  returning for, 4-4
  sales and service offices, 4-7
  tools, 4-9
servicing
  low voltage, 4-11
  optical input connector, 4-12
  photodetector and electrical amplifier unit, 4-12
  troubleshooting, 4-11
shipping
  container, 2-2
  procedure, 4-4
specifications and characteristics, 1-5–1-7
ST connector interface, 1-4
swabs, 1-16

T
temperature range, 1-7
testing the responsivity, 4-2
torque, 4-13
troubleshooting, servicing, 4-11
turning on the lightwave converter, 2-9

V
VA power requirements, 2-4
verification of the Agilent 11982A, 4-2
verification test, failing, 4-3
voltage
  range, 2-4
  tumbler, 2-5
volts, 3-4

W
warranty, 4-3
wavelength range, 1-6