ManualsPlus.com

Agilent 16048A Test Leads

Operation and Service Manual

Fourth Edition

Agilent Technologies Japan, Ltd.

Agilent PN 16048-90001

Agilent Technologies

March 2000

Printed in: Japan

ManualsPlus.com

Notices

The information contained in this document is subject to change without notice.

This document contains proprietary information that is protected by copyright.All rights are reserved. No part of this document may be photocopied, reproduced, or translated to another language without the prior written consent of the Agilent Technologies.

Agilent Technologies Japan, Ltd.

Component Test PGU-Kobe

1-3-2, Murotani, Nishi-Ku, Kobe-shi, Hyogo, 651-2241 Japan

Copyright © 1990, 1998, 1999, 2000 Agilent Technologies Japan, Ltd.

Manual Printing History

The manual's printing date and part number indicate its current edition. The printing date changes when a new edition is printed. (Minor corrections and updates that are incorporated at reprint do not cause the date to change.) The manual part number changes when extensive technical changes are incorporated.

1990	First Edition (part number: 16048-90000)
November 1998	Second Edition (part number: 16048-90001)
August 1999	Third Edition (part number: 16048-90001)
March 2000	Fourth Edition (part number: 16048-90001)

Safety Summary

The following general safety precautions must be observed during all phases of operation, service, and repair of this instrument. Failure to comply with these precautions or with specific WARNINGS elsewhere in this manual may impair the protection provided by the equipment. In addition it violates safety standards of design, manufacture, and intended use of the instrument.

Agilent Technologies assumes no liability for the customer's failure to comply with these requirements.

NOTE 16048A comply with INSTALLATION CATEGORY I and POLLUTION DEGREE 2 in IEC61010-1. 16048A are INDOOR USE product.

ManualsPlus.com

- Ground The Instrument

  To avoid electric shock hazard, the instrument chassis and cabinet must be connected to a safety earth ground by the supplied power cable with earth blade.

- DO NOT Operate In An Explosive Atmosphere

  Do not operate the instrument in the presence of flammable gasses or fumes. Operation of any electrical instrument in such an environment constitutes a definite safety hazard.

- Keep Away From Live Circuits

  Operating personnel must not remove instrument covers. Component replacement and internal adjustments must be made by qualified maintenance personnel. Do not replace components with the power cable connected. Under certain conditions, dangerous voltages may exist even with the power cable removed. To avoid injuries, always disconnect power and discharge circuits before touching them.

- DO NOT Service Or Adjust Alone

  Do not attempt internal service or adjustment unless another person, capable of rendering first aid and resuscitation, is present.

- DO NOT Substitute Parts Or Modify Instrument

  Because of the danger of introducing additional hazards, do not install substitute parts or perform unauthorized modifications to the instrument. Return the instrument to a Agilent Technologies Sales and Service Office for service and repair to ensure that safety features are maintained.

- Dangerous Procedure Warnings

  Warnings, such as the example below, precede potentially dangerous procedures throughout this manual. Instructions contained in the warnings must be followed.

WARNING **Dangerous voltages, capable of causing death, are presenting this instrument. Use extreme caution when handling, testing, and adjusting this instrument.**

Certification

Agilent Technologies certifies that this product met its published specifications at the time of shipment from the factory. Agilent Technologies further certifies that its calibration measurements are traceable to the United States National Institute of Standards and Technology, to the extent allowed by the Institution's calibration facility, or to the calibration facilities of other International Standards Organization members.

ManualsPlus.com

Warranty

This Agilent Technologies instrument product is warranted against defects in material and workmanship for a period corresponding to the individual warranty periods of its component products. Instruments are warranted for a period of one year. Fixtures and adapters are warranted for a period of 90 days. During the warranty period, Agilent Technologies Company will, at its option, either repair or replace products that prove to be defective.

For warranty service or repair, this product must be returned to a service facility designated by Agilent Technologies. Buyer shall prepay shipping charges to Agilent Technologies and Agilent Technologies shall pay shipping charges to return the product to Buyer. However, Buyer shall pay all shipping charges, duties, and taxes for products returned to Agilent Technologies from another country.

Agilent Technologies warrants that its software and firmware designated by Agilent Technologies for use with an instrument will execute its programming instruction when property installed on that instrument. Agilent Technologies does not warrant that the operation of the instrument, or software, or firmware will be uninterrupted or error free.

Limitation of Warranty

The foregoing warranty shall not apply to defects resulting from improper or inadequate maintenance by Buyer, Buyer-supplied software or interfacing, unauthorized modification or misuse, operation outside the environmental specifications for the product, or improper site preparation or maintenance.

IMPORTANT

No other warranty is expressed or implied. Agilent Technologies specifically disclaims the implied warranties of merchantability and fitness for a particular purpose.

Exclusive Remedies

The remedies provided herein are buyer’s sole and exclusive remedies. Agilent Technologies shall not be liable for any direct, indirect, special, incidental, or consequential damages, whether based on contract, tort, or any other legal theory.

ManualsPlus.com

Assistance

Product maintenance agreements and other customer assistance agreements are available for Agilent Technologies products.

For any assistance, contact your nearest Agilent Technologies Sales and Service Office. Addresses are provided at the back of this manual.

Safety Symbol

General definitions of safety symbols used on the instrument or in manuals are listed below.

⚠ Instruction Manual symbol: the product is marked with this symbol when it is necessary for the user to refer to the instrument manual.

WARNING **This warning sign denotes a hazard. It calls attention to a procedure, practice, condition or the like, which, if not correctly performed or adhered to, could result in injury or death to personnel.**

CAUTION This Caution sign denotes a hazard. It calls attention to a procedure, practice, condition or the like, which, if not correctly performed or adhered to, could result in damage to or destruction of part or all of the product.

NOTE Note denotes important information. It calls attention to a procedure, practice, condition or the like, which is essential to highlight.

ManualsPlus.com

Contents

ManualsPlus.com

1. Operation

Product Description 10
Specifications 11
Typical Characteristics 12
Compensation for Fixture Residual Impedance Error 13

2. Service

Maintenance 16

ManualsPlus.com

ManualsPlus.com

1 Operation

This operating note provides complete information on the 16048A Test Leads. The 16048A is shown pictorially in Figure 1-1, its physical dimensions are given in Table 1-1, and typical characteristics related to offset error are given in Table 1-2. To order additional copies of this operating note, use the part number listed on the rear cover.

ManualsPlus.com

Product Description

The 16048A consists of a direct attachment, 4-terminal pair type fixture which is equipped with four BNC (m) terminated-coaxial test leads. These test leads are used to attach user-fabricated test fixtures. DC bias levels of up to ±40V can be applied to the 16048A. Cable length is 1 meter. The 16048A is shown in Figure 1-1.

Figure 1-1 **Product Overview**

ManualsPlus.com

Specifications

Table 1-1 **Specifications of the 16048A**

Function:	For use with 4 terminal-pair LCR Meters and Impedance Analyzers.
Connector Type:	BNC male
Cable Length:	Approximately 1m
Maximum Voltage:	± 40V peak max. (AC+DC)
Weight:	315 g
Safety Standards:	EN61010-1:1993 +A2:1995 IEC61010-1:1990 +A1:1992 +A2:1995 CSA C22.2 No.1010.1:1992 INSTALLATION CATEGORY I POLLUTION DEGREE 2 INDOOR USE

ManualsPlus.com

Typical Characteristics

Table 1-2 **Typical Characteristics**

Incremental error at freq. ≥1 MHz	
Parameter reading error (%)	Offset value for D
$\pm 5 \times \left(\frac{f}{10}\right)^2$	$\pm 0.02 \times \left(\frac{f}{10}\right)^2$

NOTE f is the measurement frequency in megahertz. The incremental errors calculated from the equation in the table for measurements at frequencies above 1 MHz are additive.

Figure 1-2

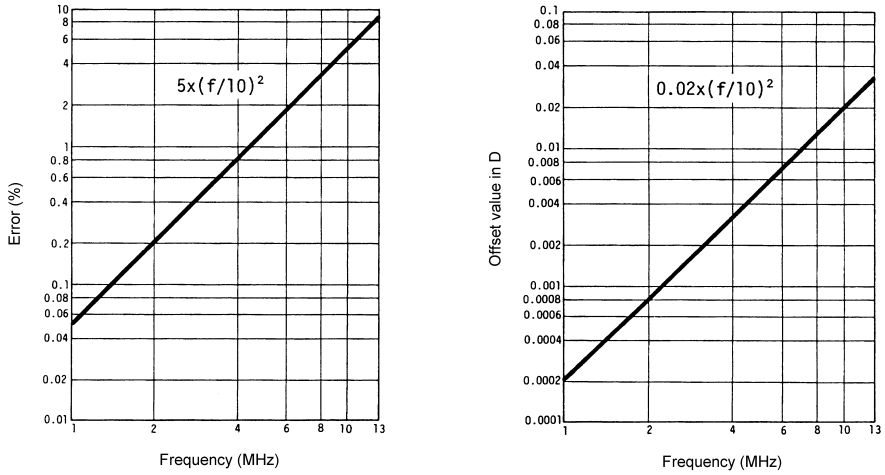

Parameter reading error vs frequency

Offset value in D vs frequency

ManualsPlus.com

Compensation for Fixture Residual Impedance Error

The 16048A has inherent stray capacitance, residual inductance, and residual resistance that affect the accuracy of measured values. To compensate for, or negate, these residuals to minimize measurement error, the instrument's Open/Short compensation procedure should be performed. The procedure is given in the instrument's operating manual.

ManualsPlus.com

ManualsPlus.com

2 Service

ManualsPlus.com

Maintenance

An exploded view of the 16048A (for parts identification) is shown in Figure 2-1. Do not disassemble any further than shown. Maintenance consists principally of cleaning contacts and replacing worn or damaged parts. Take special care when cleaning contacts. To order parts, use the Agilent Technologies part numbers listed in Table 2-1. If a faulty part is located in an assembly that cannot be disassembled, order the next higher assembly or return the whole device to the nearest Agilent Technologies Sales/Service Office for repair or replacement.

ManualsPlus.com

Figure 2-1 Parts Identification

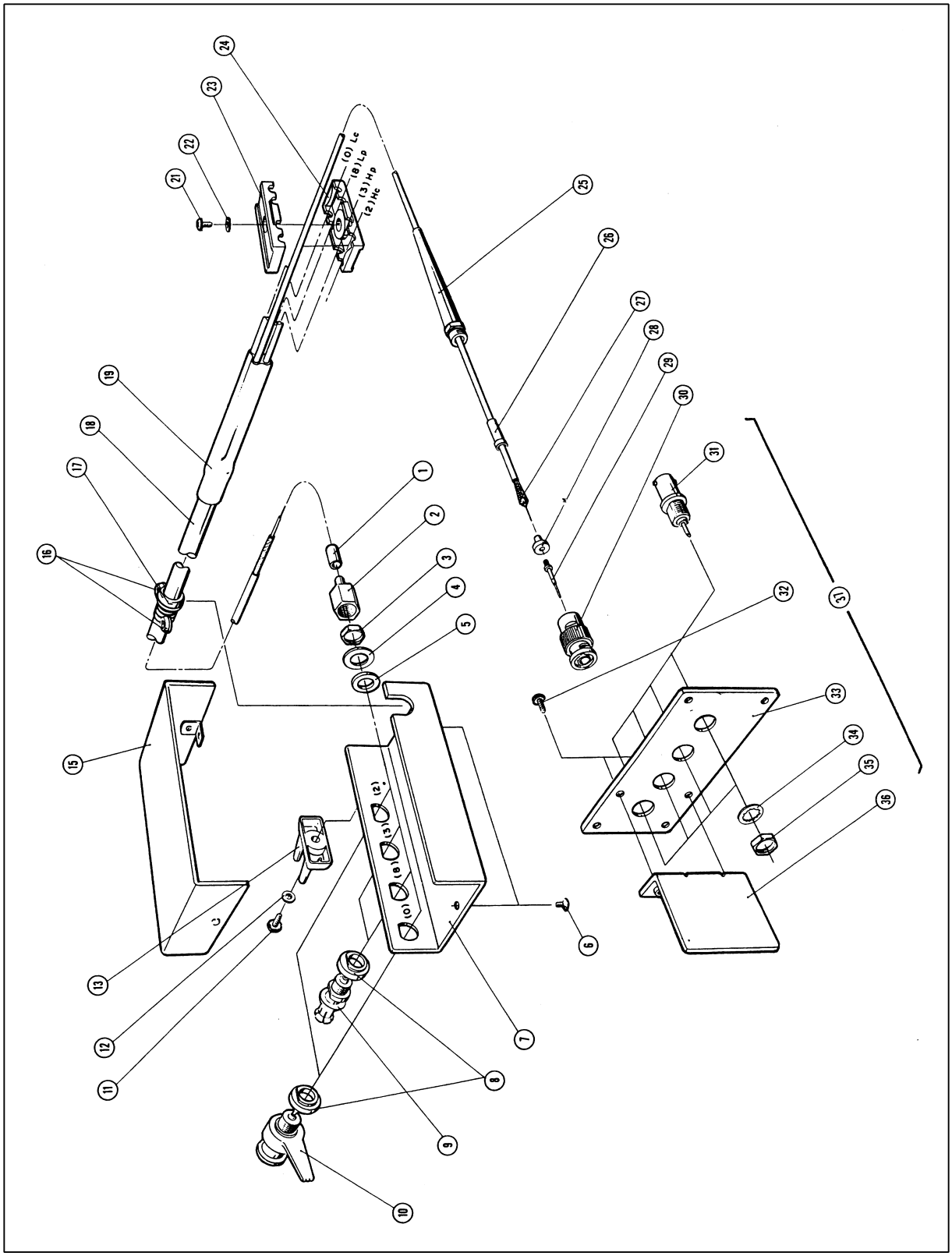

ManualsPlus.com

Table 2-1 **Parts Identification**

Reference	Agilent Part No.	Qty.	Description	Note
1	*	4	SLEEVE	
2	*	4	NUT	
3	*	4	NUT	
4	*	4	WASHER	
5	*	4	WASHER	
6	2360-0192	2	SCREW	
7	*	1	COVER-BOTTOM	
8	*	4	INSULATOR	
9	*	2	CONNECTOR-BNC	
10	*	2	CONNECTOR-BNC	
11	2200-0103	1	SCREW	
12	2190-0206	1	WASHER	
13	16047-40000	1	STOPPER	
15	16048-04000	1	COVER-TOP	
16	1400-0719	2	TIE RAP	
17	*	1	GROMMET	
18	*	1	CABLE	
19	*	1	BUSHING	
21	2360-0115	1	SCREW	
22	3050-0010	1	WASHER	
23	16021-50021	1	CABLE CRAMP	
24	16021-50022	1	CABLE CRAMP	
25	*	4	BOOT-BNC	
26	*	4	SLEEVE	
27	*	4	SLEEVE	
28	*	4	INSULATOR	
29	1250-0089	4	CONTACT	
30	1250-0052	4	CONNECTOR-BNC	
	16048-60010[a]	1	TEST LEAD	1 thru 30

ManualsPlus.com

Reference	Agilent Part No.	Qty.	Description	Note
31	1250-0118	4	CONNECTOR-BNC FEMALE	
32	2360-0115	2	SCREW	1 thru 30
33	16032-10021	1	PLATE	
34	2190-0016	4	WASHER	
35	2950-0001	4	NUT	
36	16032-10022	1	PLATE	
37	16032-60001	1	BNC BRACKET	31thru36

a. Agilent internal-only part number.

*: Not separately replaceable.

ManualsPlus.com

ManualsPlus.com

REGIONAL SALES AND SUPPORT OFFICES

For more information about Agilent Technologies test and measurement products, applications, services, and for a current sales office listing, visit our web site: http://www.agilent.com/find/tmdir. You can also contact one of the following centers and ask for a test and measurement sales representative. *11/29/99*

United States:
Agilent Technologies
Test and Measurement Call Center
P.O.Box 4026
Englewood, CO 80155-4026
(tel) 1 800 452 4844

Canada:
Agilent Technologies Canada Inc.
5150 Spectrum Way
Mississauga, Ontario
L4W 5G1
(tel) 1 877 894 4414

Europe:
Agilent Technologies
Test & Measurement
European Marketing Organization
P.O.Box 999
1180 AZ Amstelveen
The Netherlands
(tel) (31 20) 547 9999

Japan:
Agilent Technologies Japan Ltd.
Call Center
9-1, Takakura-Cho, Hachioji-Shi,
Tokyo 192-8510, Japan
(tel) (81) 426 56 7832
(fax) (81) 426 56 7840

Latin America:
Agilent Technologies
Latin American Region Headquarters
5200 Blue Lagoon Drive, Suite #950
Miami, Florida 33126
U.S.A.
(tel) (305) 267 4245
(fax) (305) 267 4286

Australia/New Zealand:
Agilent Technologies Australia Pty Ltd
347 Burwood Highway
Forest Hill, Victoria 3131
(tel) 1-800 629 485 (Australia)
(fax) (61 3) 9272 0749
(tel) 0 800 738 378 (New Zealand)
(fax) (64 4) 802 6881

Asia Pacific:
Agilent Technologies
24/F, Cityplaza One, 1111 King's Road,
Taikoo Shing, Hong Kong
(tel) (852)-3197-7777
(fax) (852)-2506-9284