Service Guide

ManualsPlus.com

Publication number 16760-97013
May 2004

For Safety and Regulatory information see the pages at the end of the book.

© Copyright Agilent Technologies 2001-2004
All Rights Reserved.

Agilent Technologies 16760A Logic Analyzer

ManualsPlus.com

The Agilent 16760A Logic Analyzer—At a Glance

The Agilent Technologies 16760A is a 1500 Mb/s state, 800 MHz timing logic analyzer module for the Agilent Technologies 16700-series logic analysis system. The 16760A offers high performance measurement capability.

Features

Some of the main features of the 16760A are as follows:

- 32 data channels
- 2 clock/data channels
- 128 Mb memory depth per channel
- 1500 MHz maximum state acquisition speed
- 800 MHz maximum timing acquisition speed
- Expandable to 170 channels

Service Strategy

The service strategy for this instrument is the replacement of defective assemblies. This service guide contains information for finding a defective assembly by testing and servicing the 16760A state and timing analyzer module.

The modules can be returned to Agilent Technologies for all service work, including troubleshooting. Contact your nearest Agilent Technologies Sales Office for more details.

Application

This service guide applies to a 16760A module installed in the 16700-series logic analysis system mainframes.

ManualsPlus.com

The 16760A uses operating system version A.02.20.00 or higher. Agilent Technologies 16700-series mainframes with serial number prefix lower than US4111 are factory-installed with older operating system versions. If your mainframe operating system is older than the required version, contact your Agilent Technologies Service Center for newer software. Refer to “Mainframe and Operating System” on page 10 for more information.

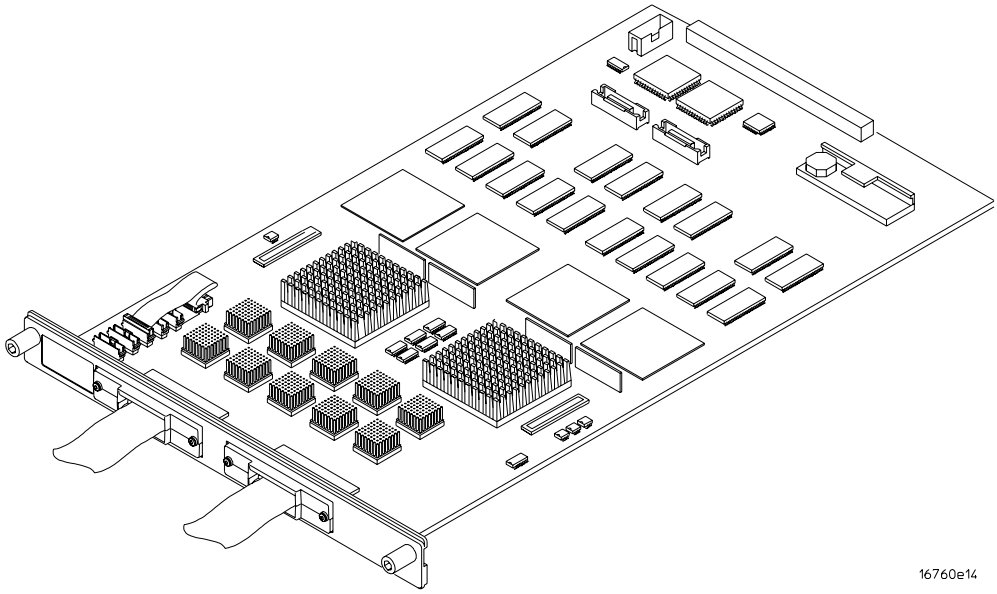

The 16760A Logic Analyzer

ManualsPlus.com

This book is the service guide for the 16760A 1500 Mb/s state, 800 MHz timing logic analyzer module.

This service guide has eight chapters.

Chapter 1, “General Information,” beginning on page 9 contains information about the module and includes accessories for the module, specifications and characteristics of the module, and a list of the equipment required for servicing the module.

Chapter 2, “Preparing for Use,” beginning on page 15 tells how to prepare the module for use.

Chapter 3, “Testing Performance,” beginning on page 31 gives instructions on how to test the performance of the module.

Chapter 4, “Calibrating,” beginning on page 99 contains calibration instructions for the module (if required).

Chapter 5, “Troubleshooting,” beginning on page 101 contains explanations of self-tests and flowcharts for troubleshooting the module.

Chapter 6, “Replacing Assemblies,” beginning on page 127 tells how to replace the module and assemblies of the module and how to return them to Agilent Technologies.

Chapter 7, “Replaceable Parts,” beginning on page 137 lists replaceable parts, shows an exploded view, and gives ordering information.

Chapter 8, “Theory of Operation,” beginning on page 143 explains how the analyzer works.

ManualsPlus.com

1 General Information

Accessories 10
Mainframe and Operating System 10
Specifications 11
Characteristics 12
Environmental Characteristics 12
Recommended Test Equipment 13

2 Preparing for Use

Power Requirements 16
Operating Environment 16
Storage 16
To inspect the module 16
To prepare the mainframe 17
To configure a one-card module 18
To configure a multi-card module 20
To install the module 26
To turn on the system 28
To test the module 28
To clean the module 29

3 Testing Performance

To assemble the SMA/Flying Lead test connectors 34

16760A Minimum Data Eye Width and Minimum Clock Interval Performance Test Procedure 38

Equipment Required 39

Prepare the logic analysis system for testing 40

Initialize the test equipment for minimum data eye width/minimum clock interval test 42

Connect the test equipment for the minimum clock interval/minimum eye width test 44

Set up the test equipment 47
Verify and adjust 8133A pulse generator DC offset 47
Deskew the oscilloscope 48
Adjust the measured pulse width to 1.5 ns 49

ManualsPlus.com

Configure the logic analysis system 51
Adjust sampling positions using Eye Finder 56
Re-aligning a stray channel 57

Test Pod 1 in 200 Mb/s mode 59
Determine PASS/FAIL (1 of 2 tests) 59
Open and configure the Listing window. 59
Determine PASS/FAIL (2 of 2 tests) 61
Test the complement of the bits (200 Mb/s mode) 63

Test Pod 2 in 200 Mb/s mode 65
Test the complement of the bits (Pod 2, 200 Mb/s mode) 66

Test Pod 1 in the 400 Mb/s mode 67
Determine and set Eye Finder Position (400 Mb/s mode) 68
Test the complement of the bits (Pod 1, 400 Mb/s mode) 70

Test Pod 2 in 400 Mb/s mode 71
Test the complement of the bits (Pod 2, 400 Mb/s mode) 72

Test Pod 1 in the 800 Mb/s mode 73
Adjust the measured pulse width to 750 ps 73
Determine and set Eye Finder Position (800 Mb/s mode) 75
Test the complement of the bits (Pod 1, 800 Mb/s mode) 77

Test Pod 2 in 800 Mb/s mode 79
Test the complement of the bits (Pod 2, 800 Mb/s mode) 80

Test Pod 1 in the 1250 Mb/s mode 81
Determine and set Eye Finder Position (1250 Mb/s mode) 82
Test the complement of the bits (Pod 1, 1250 Mb/s mode) 84

Test Pod 2 in 1250 Mb/s mode 85
Test the complement of the bits (Pod 2, 1250 Mb/s mode) 86

Test Pod 1 in the 1500 Mb/s mode 87
Adjust the measured pulse width to 600 ps 88
Determine and set Eye Finder Position (1500 Mb/s mode) 90
Test the complement of the bits (Pod 1, 1500 Mb/s mode) 91

Test Pod 2 in 1500 Mb/s mode 93
Test the complement of the bits (Pod 2, 1500 Mb/s mode) 94

To test the multi-card module 95

ManualsPlus.com

Performance Test Record 96

4 Calibrating

Calibration Strategy 100

5 Troubleshooting

To use the flowcharts 102
To run the self-tests 105
Self-Test Descriptions 106
To exit the test system 112
To test the cables using an Agilent E5378A Single-ended Probe 113
To test the cables using an Agilent E5379A Differential Probe 121

6 Replacing Assemblies

Tools Required 128
To remove the module 128
To remove the logic analyzer cable 130
To install the logic analyzer cable 131
To replace the circuit board 133
To replace the module 134
To return assemblies 136

7 Replaceable Parts

Replaceable Parts Ordering 138
Replaceable Parts List 139
Exploded View 141
E5382A Accessories 142

8 Theory of Operation

Block-Level Theory 144

Index

ManualsPlus.com

ManualsPlus.com

General Information

This chapter lists the accessories, the specifications and characteristics, and the recommended test equipment.

ManualsPlus.com

Accessories

One or more of the following accessories, not supplied, are required to operate the 16760A logic analyzer.

Accessories	Agilent Part Number
Single-ended soft touch probe	E5390A
Differential soft touch probe	E5387A
100-pin single-ended probe	E5378A
100-pin differential probe	E5379A
38-pin single-ended probe	E5380A
Single-ended flying lead probe set	E5382A
Differential flying lead probe set	E5381A

Mainframe and Operating System

The 16760A logic analyzer requires an Agilent Technologies 16700-series logic analysis system with operating system version A.02.20.00 or higher. However, the specifications apply to operating system version A.02.60.00 or higher. The mainframe operating system must be upgraded to version A.02.60.00 before attempting the performance verification procedure in Chapter 3. Request a software upgrade at http://software.cos.agilent.com/16700 or by contacting your nearest Agilent Technologies Customer Support Center. Agilent Technologies 16700-series mainframes with serial number prefix lower than US4148 are factory-installed with operating system versions older than A.02.60.00.

Three Cooling Fans Required in Mainframe

Earlier versions of the 16700A/01A/02A mainframe contained only two cooling fans and might not provide adequate cooling to ensure reliable performance. If the first six digits of the 16700A/02A serial number (located on the back of the instrument) are US3849 or higher, or the first six digits of the 16701A are US3902 or higher, the instrument is a three-fan model, which will supply sufficient cooling.

All 16700B/01B/02B systems already have three cooling fans which provide adequate cooling to ensure reliable performance.

ManualsPlus.com

Specifications

The specifications are the performance standards against which the product is tested.

Setup/Hold Window:

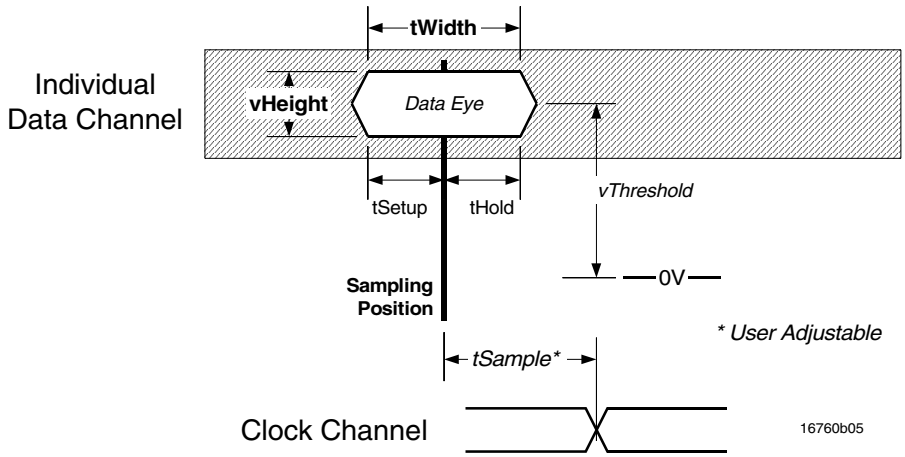

	Specifications for each input						
	Parameter	Minimum					Description/Notes
		1500 Mb/s	1250 Mb/s	800 Mb/s	400 Mb/s	200 Mb/s	
Data to Clock	tWidth*	500 ps			1.25 ns		Eye width in system under test**
	tSetup	250 ps			625 ps		Data setup time required before tSample
	tHold	250 ps			625 ps		Data hold time required after tSample

*Specified for an input signal ≤ 800 mV peak-to-peak voltage swing 1V/ns slew rate, using an Agilent E5378A or E5382A probe.
**Eye width and height are specified at the probe tip. Eye width as measured by eye finder in the analyzer may be less.

ManualsPlus.com

Characteristics

The characteristics are not specifications, but are included as additional information.

Threshold Accuracy	±(30 mV + 1.0% of threshold setting)

Speed/Depth/Channel Count	**Full Channel**	**Half Channel**
Maximum Conventional Timing Rate	400 MHz	800 MHz
Memory Depth	64 M	128 M
Channel Count per Card	34	17
Channel Count per Five-Card Module	170	85

Environmental Characteristics

Probes	
Maximum Input Voltage	± 40 V, CAT I, CAT I = Category I, secondary power line isolated circuits.
Auxiliary Power	
Power Through Cables	1/3 amp at +5 V maximum per cable.
Operating Environment	
Temperature	Instrument, 0 °C to 50 °C (+32 °F to 122 °F). Probe lead sets and cables, 0 °C to 55 °C (+32 °F to 149 °F).
Humidity	Instrument, probe lead sets, and cables, up to 95% relative humidity at +40 °C (+122 °F). Non-condensing.
Altitude	To 3000 m (10,000 ft).
Vibration	Operating: Random vibration 5 to 500 Hz, 10 minutes per axis, ≈0.2 g (rms). Non-operating: Random vibration 5 to 500 Hz, 10 minutes per axis, ≈2.41 g (rms); and swept sine resonant search, 5 to 500 Hz, 0.5 g (0-peak), 5 minute resonant dwell at 4 resonances per axis.
	Operating power supplied by mainframe. Indoor use only. Pollution Degree 2.

ManualsPlus.com

Recommended Test Equipment

Equipment Required

Equipment	Critical Specifications	Recommended Agilent Model/Part	Use
Probe Adapter	no substitute	E5378A	P,T
Probe Adapter (Qty 2)*	no substitute	E5382A	P, T
Ground Clips (Qty 10)	no substitute	16517-82105 (pkg of 20)	T
Stimulus Board	no substitute	16760-60001	T
Pulse Generator	750 MHz, 666.6 ps pulse width, < 120 ps rise time	8133A Option 003	P,T
Digitizing Oscilloscope	≥11 GHz bandwidth, < 31.8 ps rise time	54750A mainframe with 54751A plug-in module	P
Test connectors**	no substitute		P
150 ps Transition Time Converters (Qty 4)	See page 39.	Agilent or HP 15435A	P
20:1 Probes (Qty 2)		54006A	T
SMA Coax Cable (Qty 3)	≥ 18 GHz bandwidth	8120-4948	P
BNC Coax Cable	BNC (m-m), > 2 GHz bandwidth	8120-1840	P
Adapter	SMA(m)-BNC(f)	1250-1200	P

P = Performance Tests, T = Troubleshooting

*For a multicard module, one probe adapter per card is required.
**Instructions for making these test connectors are in Chapter 3.

ManualsPlus.com

ManualsPlus.com

Preparing for Use

This chapter gives you instructions for preparing the logic analyzer module for use.

ManualsPlus.com

Power Requirements

All power supplies required for operating the logic analyzer are supplied through the backplane connector in the mainframe.

Operating Environment

The operating environment is listed on page 12. Note the non-condensing humidity limitation. Condensation within the instrument can cause poor operation or malfunction. Provide protection against internal condensation.

The logic analyzer module will operate at all specifications within the temperature and humidity range given on page 12. However, reliability is enhanced when operating the module within the following ranges:

Temperature: +20 °C to +35 °C (+68 °F to +95 °F)

Humidity: 20% to 80% non-condensing

Storage

Store or ship the logic analyzer in environments within the following limits:

- Temperature: -40 °C to +75 °C (-40 °F to +167 °F)
- Humidity: Up to 90% at 65 °C
- Altitude: Up to 15,300 meters (50,000 feet)

Protect the module from temperature extremes which cause condensation on the instrument.

To inspect the module

1 Inspect the shipping container for damage.

If the shipping container or cushioning material is damaged, keep them until you have checked the contents of the shipment and checked the instrument mechanically and electrically.

2 Check the supplied accessories.

One or more of the accessories listed on page 10 are required to operate the 16760A logic analyzer module.

3 Inspect the product for physical damage.

Check the module and the supplied accessories for obvious physical or

ManualsPlus.com

mechanical defects. If you find any defects, contact your nearest Agilent Technologies Sales Office. Arrangements for repair or replacement are made, at Agilent Technologies' option, without waiting for a claim settlement.

To prepare the mainframe

CAUTION: Turn off the mainframe power before removing, replacing, or installing the module.

CAUTION: Electrostatic discharge can damage electronic components. Use grounded wrist-straps and mats when performing any service to this module.

1 Remove power from the instrument.

- **a** Exit all logic analysis sessions. In the session manager, select Shutdown.
- **b** At the query, select Power Down.
- **c** When the “OK to power down” message appears, turn the instrument off.
- **d** Disconnect the power cord.
- **e** Disconnect any input or output connections.

2 Plan your module configuration.

If you are installing a one-card module, use any available slot in the mainframe.

If you are installing a multi-card module, use adjacent slots in the mainframe.

3 Loosen the thumb screws.

Cards or filler panels below the slots intended for installation do not have to be removed.

Starting from the top, loosen the thumb screws on filler panels and cards that need to be moved.

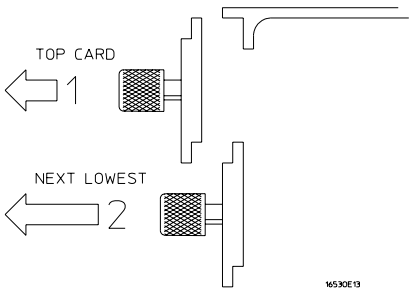

ManualsPlus.com

4 Starting from the top, pull the cards and filler panels that need to be moved halfway out.

CAUTION: All multi-card modules will be cabled together. Pull these cards out together.

5 Remove the cards and filler panels.

Remove the cards or filler panels that are in the slots intended for the module installation. Push all other cards into the card cage, but not completely in. This is to get them out of the way for installing the module.

Some modules for the Logic Analysis System require an operational accuracy calibration if you move them to a different slot. For calibration information, refer to the manuals for the individual modules.

To configure a one-card module

- When shipped separately, the module is configured as a one-card module. The cables should be connected as shown in the figure.
- To configure a multicard module into one-card modules, remove the cables connecting the cards. Then connect the free end of the 2x10 cable to the connector labeled "Master" (J6) on each card (see figure below).

ManualsPlus.com

CAUTION: If you pull on the flexible ribbon part of the 2x10 cable, you might damage the cable assembly. Using your thumb and finger, grasp the ends of the cable connector. Apply pressure to the ends of the cable connector to disengage the metal locking tabs of the connector from the cable socket on the board. Then pull the connector from the cable socket.

NOTE: Save unused cables for future configurations.

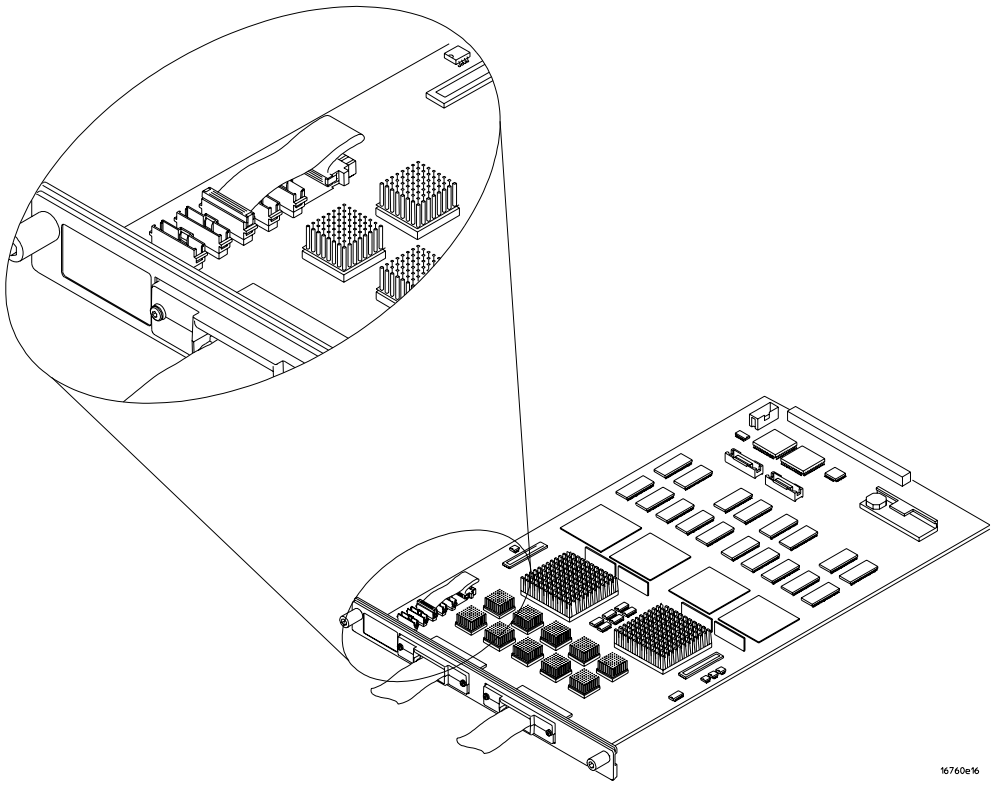

ManualsPlus.com

To configure a multi-card module

1 Plan the configuration. Multicard modules can only be connected as shown in the illustration. Expander cards are evenly distributed above and below the master card. Select the card that will be the master card, and set the remaining cards aside.

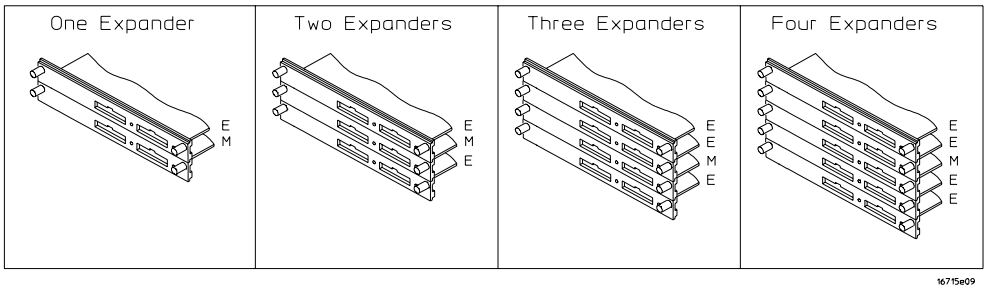

2 Obtain two 2x40 cables from the accessory pouch for every expander card being configured.

One Expander: Two 2x40 cables

Two Expanders: Four 2x40 cables

Three Expanders: Six 2x40 cables

Four Expanders: Eight 2x40 cables.

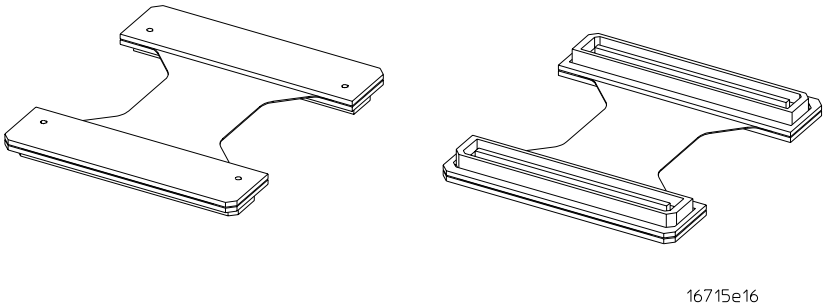

ManualsPlus.com

3 Connect a 2x40 cable to J9 and to J10 of each card in the multicard configuration.

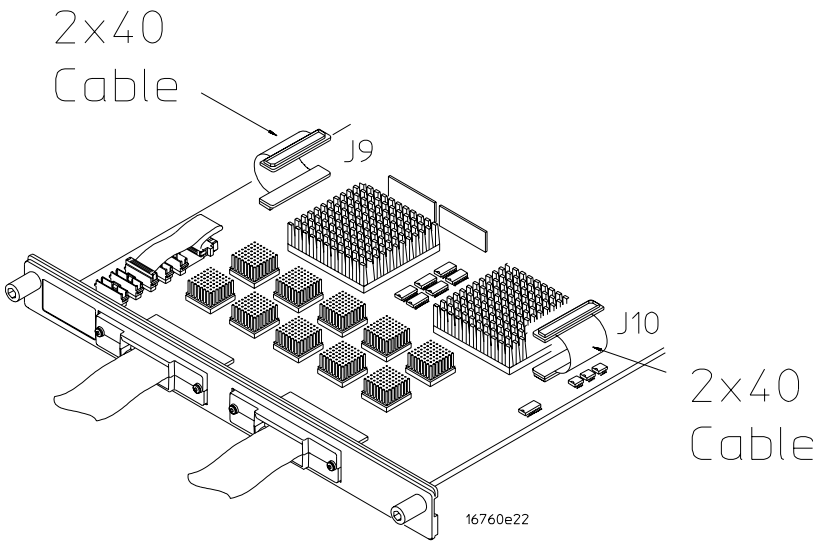

4 On the expander cards, disconnect the end of the 2x10 cable that is plugged into the connector labeled "Master."

CAUTION: If you pull on the flexible ribbon part of the 2x10 cable, you might damage the cable assembly. Using your thumb and finger, grasp the ends of the cable connector. Apply pressure to the ends of the cable connector to disengage the metal locking tabs of the connector from the cable socket on the board. Then pull the connector from the cable socket.

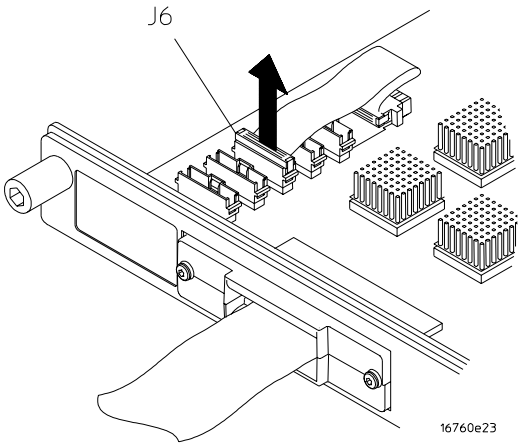

ManualsPlus.com

5 Begin stacking the cards together according to the drawing under step 1. While stacking, connect the free end of the 2x40 cable on the lower card J9 to J500 of the upper card, on the underside of the card. Connect the free end of the 2x40 cable on the lower card J10 to J501 of the upper card, on the underside of the card.

NOTE: These instructions show a five-card set. If you are planning a set of less than five cards, see the diagram on page 20 for correct placement.

CAUTION: When stacking cards, make sure that the cards do not rub together and damage components on the underside of the cards.

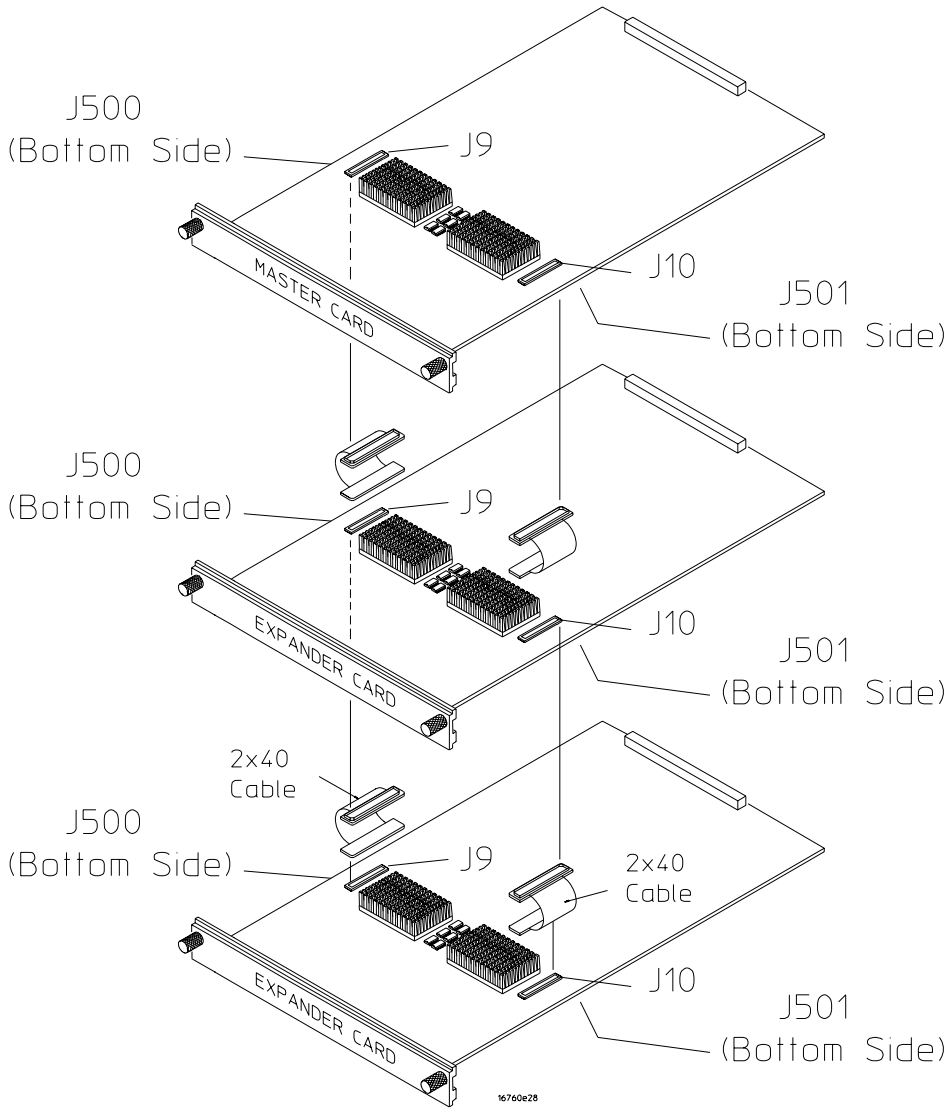

ManualsPlus.com

6 Feed the free end of the 2x10 cables of the lower expander cards through the access holes to the master card. Plug the 2x10 cables into J4 (bottom-most expander in a five-card configuration) and J5 (expander that is next to the master card) on the master card.

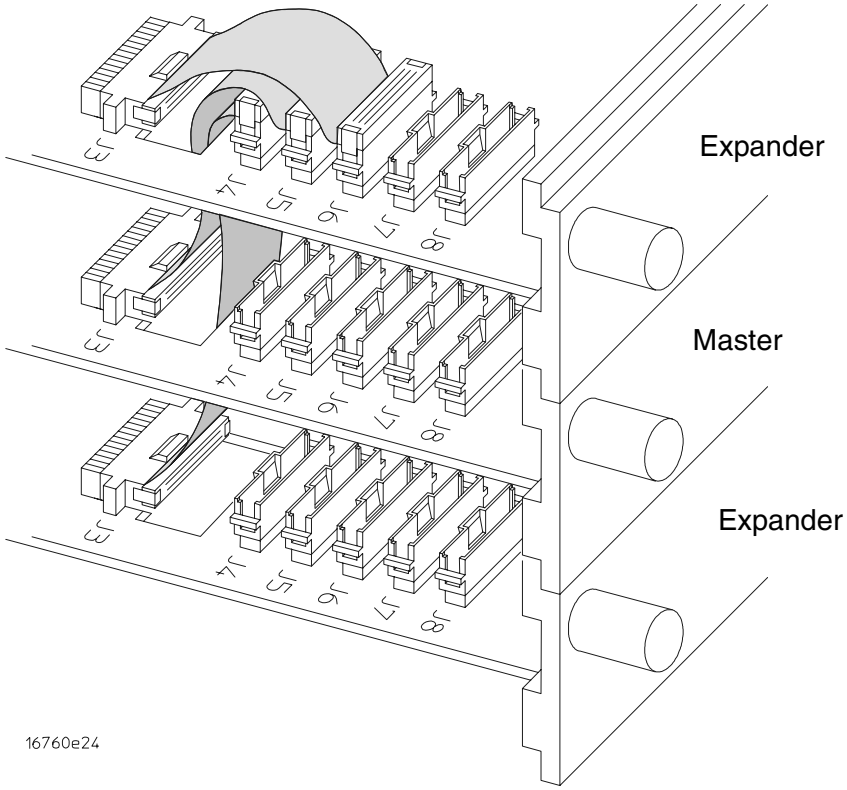

ManualsPlus.com

7 Stack the remaining expander boards on top of the master board. While stacking, connect the free end of the 2x40 cables on the lower card J10 and J9 to the upper card J501 and J500.

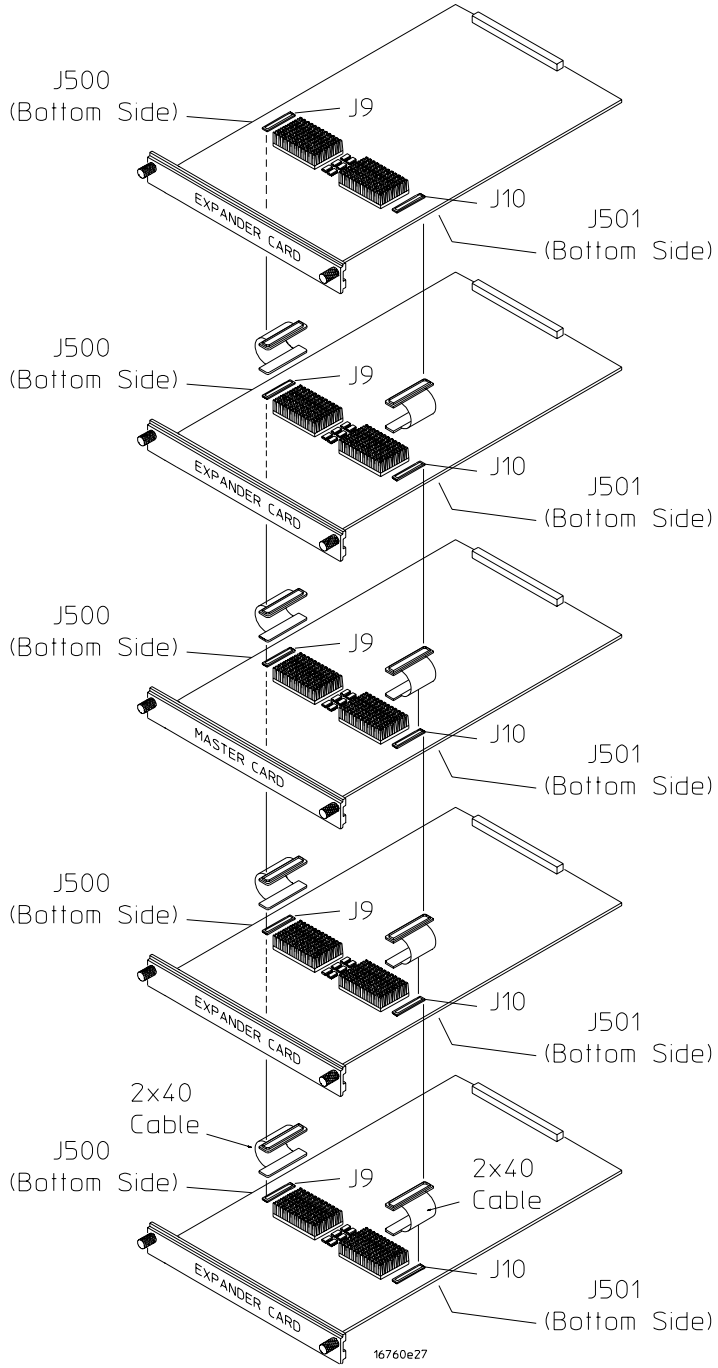

ManualsPlus.com

8 Feed the free end of the 2x10 cables of the expander cards through the access holes to the master card. Plug the 2x10 cables into J7 (expander that is next to the master card) and J8 (top-most expander in a four- or five-card configuration) on the master card.

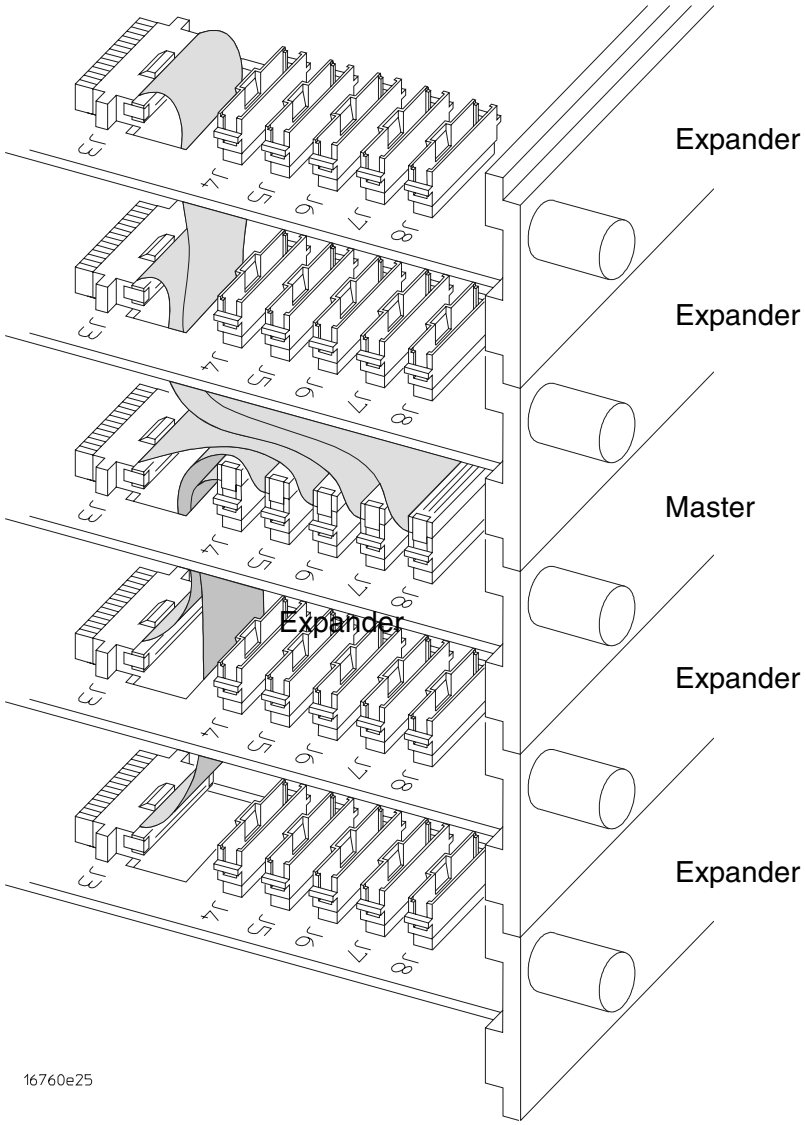

ManualsPlus.com

To install the module

1 Slide the cards above the slots for the module about halfway out of the mainframe.

2 With the probe cables facing away from the instrument, slide the module approximately halfway into the mainframe.

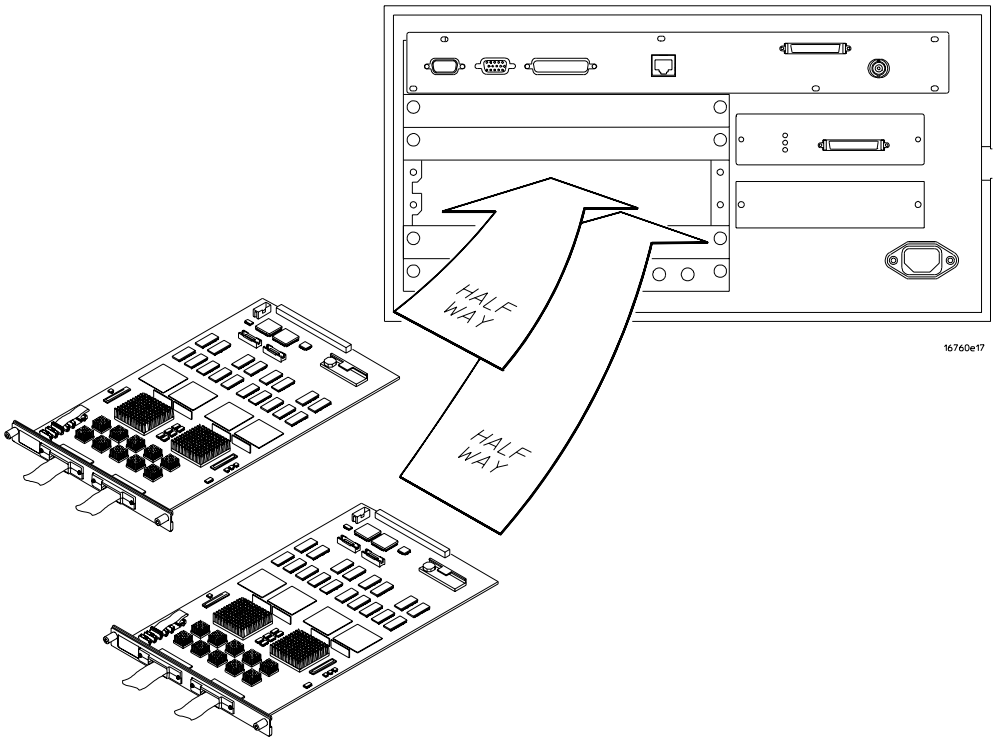

3 Slide the complete module into the mainframe, but not completely in.

Each card in the instrument is firmly seated and tightened one at a time in step 5.

4 Position all cards and filler panels so that the endplates overlap.

ManualsPlus.com

5 Seat the cards and tighten the thumbscrews.

Starting with the bottom card, firmly seat the cards into the backplane connector of the mainframe. Keep applying pressure to the center of the card endplate while tightening the thumbscrews finger-tight. Repeat this for all cards and filler panels starting at the bottom and moving to the top.

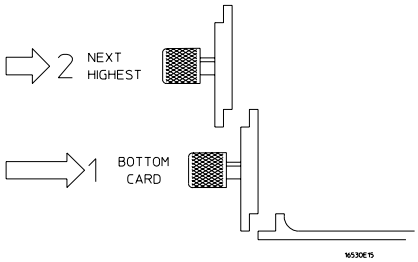

CAUTION: Correct air circulation keeps the instrument from overheating. For correct air circulation, filler panels must be installed in all unused card slots. Keep any extra filler panels for future use.

ManualsPlus.com

To turn on the system

1 Connect the power cable to the mainframe.

2 Turn on the instrument power switch.

When you turn on the instrument power switch, the instrument performs powerup tests that check mainframe circuitry. After the powerup tests are complete, the screen will look similar to the sample screen below.

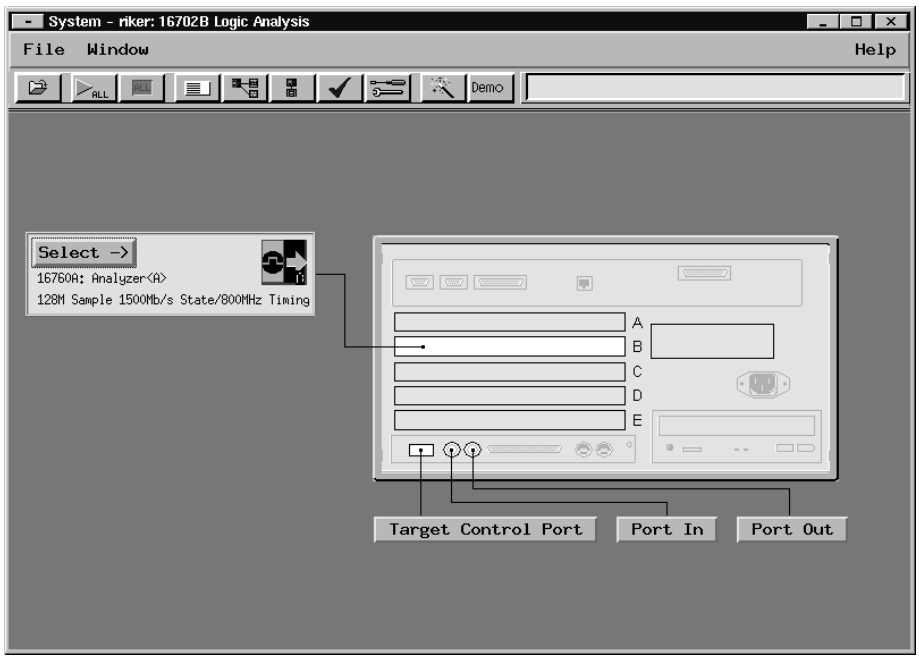

To test the module

The logic analyzer module does not require an operational accuracy calibration or adjustment. After installing the module, you can test and use the module.

- If you require a test to verify the specifications, see “Testing Performance” on page 31.
- If you require a test to verify correct module operation using software self-tests, see “To run the self-tests” on page 105.
- If the module does not operate correctly, see “Troubleshooting” on page 101.

ManualsPlus.com

To clean the module

- With the mainframe turned off and unplugged, use a cloth moistened with a mixture of mild detergent and water to clean the rear panel.
- Do not attempt to clean the module circuit board.

ManualsPlus.com

ManualsPlus.com

3

Testing Performance

This chapter tells you how to test the performance of the logic analyzer against the specifications.

ManualsPlus.com

To ensure the logic analyzer is operating as specified, software tests (self-tests) and manual performance tests are done. The logic analyzer is considered performance-verified if all of the software tests and manual performance tests have passed. The procedures in this chapter indicate what constitutes a “Pass” status for each of the tests.

Test Strategy

This chapter shows the module being tested in an Agilent Technologies 16700B-series mainframe. For a complete test, start at the beginning with the software tests and continue through to the end of the chapter. For an individual test, follow the procedure in the test.

Only specified parameters are tested. Specifications are listed on page 11. The test conditions defined in this procedure ensure that the specified parameter is as good as or better than specification. No attempt is made to determine performance which is better than specification. Not all channels of the logic analyzer will be tested; rather a sample of channels is tested. A calibration laboratory may choose to elaborate on these tests and test all channels at their discretion.

One-card Module. To perform a complete test on a one-card module, start at the beginning of the chapter and follow the test procedure.

Multi-card Module. To perform a complete test on a multi-card module, perform the self-tests (page 40) with the cards connected. Then, remove the multi-card module from the mainframe and configure each card as a one-card module. Install the one-card modules into the mainframe and perform the performance verification tests on each card. When the tests are complete, remove the one-card modules, reconfigure them into their original multi-card module configuration, reinstall it into the mainframe and perform the self-tests again.

For removal instructions see Chapter 6, “Replacing Assemblies,” beginning on page 127. For installation and configuration instructions see Chapter 2, “Preparing for Use,” beginning on page 15.

Test Interval

Test the performance of the module against specifications at two-year intervals.

Test Record Description

A performance test record for recording the results of each procedure is located at the end of this chapter.

ManualsPlus.com

Test Equipment

Each procedure lists the recommended test equipment. You can use equipment that satisfies the specifications given. However, the procedures are based on using the recommended model or part number.

Instrument Warm-Up

Before testing the performance of the module, warm-up the instrument and the test equipment for 30 minutes.

ManualsPlus.com

To assemble the SMA/Flying Lead test connectors

The SMA/Flying Lead test connectors provide a high-bandwidth connection between the logic analyzer and the test equipment. The following procedure explains how to fabricate the four required test connectors.

Materials Required

Material	Critical Specification	Recommended Model/Part
SMA Board Mount Connector (Qty 8)		Johnson 142-0701-801 (ref: www.johnsoncomponents.com)
Pin Strip Header (Qty 1, which will be separated)	.100" X .100" Pin Strip Header, right angle, pin length .230", two rows, .120" solder tails	3M 2380-5121TN or similar 2- row with 0.1" pin spacing
SMA 50 ohm terminators (Qty 2)	Minimum bandwidth 2 GHz	Johnson 142-0801-866 50 ohm Dummy Load Plug
SMA m-m adapter (Qty 4)		Johnson 142-0901-811 SMA Plug to Plug or similar

1 Prepare the pin strip header:

a Cut or cleanly break a 2 x 2 section from the pin strip.

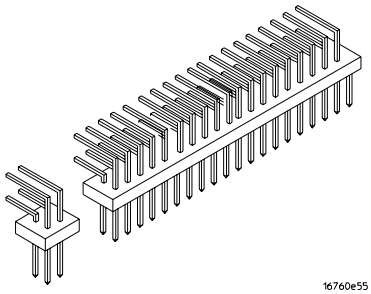

ManualsPlus.com

b Trim about 1.5 mm from the pin strip inner leads and straighten them so that they touch the outer leads.

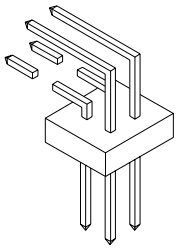

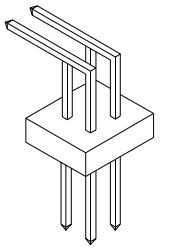

c Trim about 2.5 mm from the outer leads.

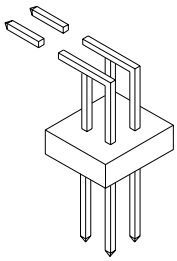

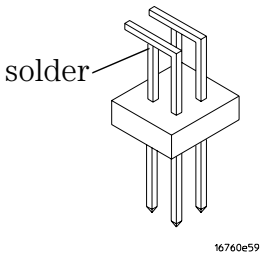

d Using a very small amount of solder, tack each inner lead to each outer lead at the point where they are touching.

ManualsPlus.com

2 Solder the pin strip to the SMA board mount connector:

a Solder the leads on the left side of the pin strip to the center conductor of the SMA connector as shown in the diagram below.

b Solder the leads on the right side of the pin strip to the inside of the SMA connector's frame as shown in the diagram below. Use a small amount of solder.

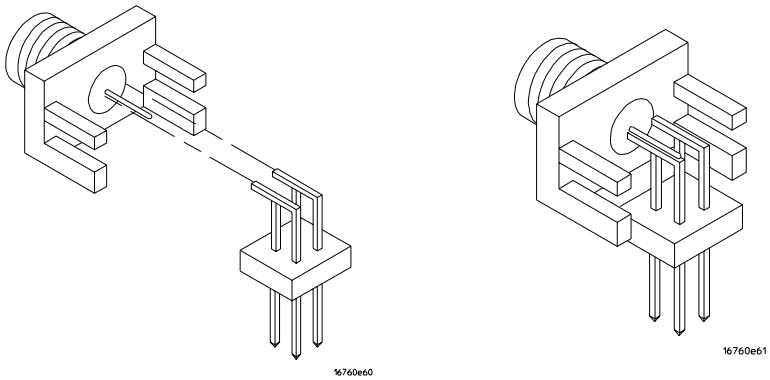

3 Attach the second SMA board mount connector:

a Re-heat the solder connection made in the previous step, and attach the second SMA connector, as shown in the diagram below. Note that the second SMA connector is upside-down, compared to the first. Add a little solder to make a good connection.

b Solder the center conductor of the second SMA connector to the center conductor of the first SMA connector and the leads on the left side of the pin strip.

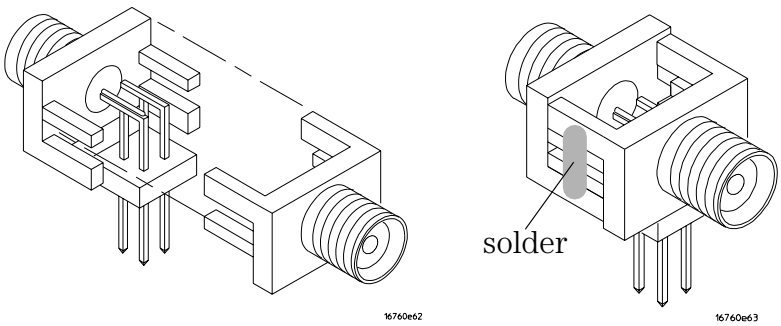

c Rotate the assembly 180 degrees and solder the two SMA board mount connector frames together.

ManualsPlus.com

4 Check your work:

a Ensure that the following four points have continuity between them: The two pins on the left side of the pin strip, and the center conductors of each SMA connector.

b Ensure that there is continuity between each of the two pins on the right side of the pin strip, and the SMA connector frames.

c Ensure that there is NO continuity between the SMA connector center conductor and the SMA connector frame (ground).

5 Finish creating the test connectors:

a Attach an SMA m-m adapter to one end of each of the four SMA/Flying Lead test connectors.

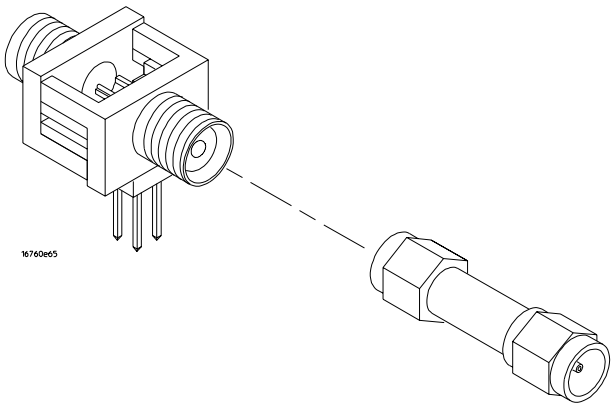

b Attach a 50 ohm terminator to the other end of just two of the SMA/Flying Lead test connectors.

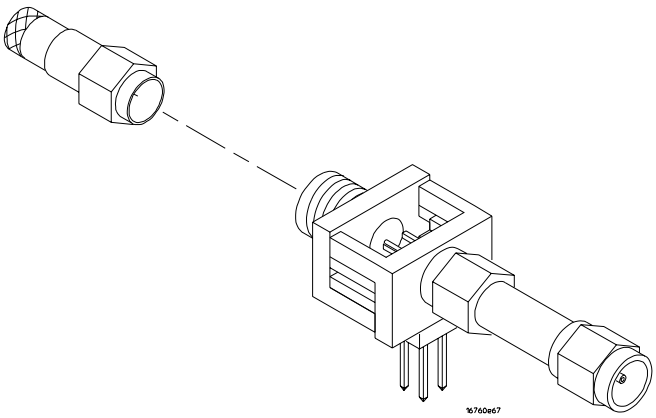

ManualsPlus.com

16760A Minimum Data Eye Width and Minimum Clock Interval Performance Test Procedure

The specifications for the 16760A logic analyzer define a minimum data eye width and a minimum clock interval at which data can be acquired.

Acquisition Mode:	200 Mb/s	400 Mb/s	800 Mb/s	1.25 Gb/s	1.5 Gb/s
Minimum clock interval, active edge to active edge	5 ns	2.5 ns	1.25 ns	800 ps	667 ps
Minimum data pulse width	1.5 ns	1.5 ns	750 ps	750 ps	600 ps

These tests verify that the logic analyzer meets these specifications.

At each of the five acquisition modes, we will test the minimum data eye width at the minimum clock interval, thereby testing both specifications at once.

The minimum clock interval is specified from active clock edge to active clock edge. All tests are performed while clocking data into the logic analyzer on both rising and falling edges of the clock (double edge clock), so the pulse generator test frequency will be set to half of the acquisition speed.

Eye Finder is used to adjust the sampling position on every channel. Eye Finder must be used to achieve minimum data eye width.

ManualsPlus.com

Equipment Required

The following equipment is required for the performance test procedure.

Equipment Required

Equipment	Critical Specification	Recommended Model/Part
Pulse Generator	≥ 765 MHz, two channels, differential outputs, 150-180 ps rise/fall time (if faster, use transition time converters).	Agilent or HP 8133A option 003
150 ps Transition Time Converter (Qty 4)	Required if pulse generator's rise time is less than 150 ps. (Pulse generator conditions: Voffset = 1V, ΔV = 250 mV.) Required for 8133A opt. 003.	Agilent or HP 15435A
Oscilloscope	bandwidth ≥ 1.5 GHz, sampling rate ≥ 8 GSa/s	Agilent or HP 54845A/B or similar
SMA Coax Cable (Qty 2)	> 18 GHz bandwidth	Agilent or HP 8120-4948
Flying Lead Probe Set (Qty 2)	no substitute	Agilent E5382A
Male BNC to Female SMA adapters (Qty 2)		Cambridge Products CP-AD507 (ref: www.cambridgeproducts.com)
SMA/Flying Lead test connectors, (f) SMA to (f) SMA to Flying Lead Probe (Qty 4)	no substitute	See "To assemble the SMA/Flying Lead test connectors" on page 34

ManualsPlus.com

Prepare the logic analysis system for testing

1 Turn on the logic analysis system.

a Connect the keyboard and monitor to the rear panel of the logic analysis mainframe (16700B only).

b Connect the mouse to the rear panel of the mainframe.

c Plug in the power cord to the power connector on the rear panel of the mainframe.

d Turn on the main power switch on the mainframe front panel.

While the logic analysis system is booting, observe the boot dialogue for the following:

- ensure all of the installed memory is recognized
- any error messages
- interrupt of the boot process with or without error message

A complete transcript of the boot dialogue is in the Agilent Technologies 16700B-series Logic Analysis System Service Guide, Chapter 8, "Theory of Operation."

2 During initialization, check for any failures.

If an error or an interrupt occurs, refer to the Agilent Technologies 16700B-series Logic Analysis System Service Guide, Chapter 5, "Troubleshooting." Note that if an Agilent 16760A module is temporarily installed in a mainframe only to test the performance of the module, then the mainframe may report that the module will require an operational accuracy calibration. This is expected, and step 4 in this procedure will clear this error message.

3 Do a self-test on the logic analysis system.

a When the logic analysis system has finished booting and the System window appears (that is, a session has started), click on the System Administration icon.

b Under the Admin tab, click on Self-Test... in the query pop-up, select Yes to exit the current session.

The Self-Test closes the current session because the test algorithms leave the system in an unknown state. Re-launching the session at the end of the self-test will ensure the system is properly initialized.

c In the Self-Test window select Test All.

When the tests are finished, the Status will change to Passed or Failed. You can find detailed information about the test results in the Status Message field of the Self-Test window.

ManualsPlus.com

Some system CPU board tests may return a status of Untested because they require user action. Procedures to do these tests are found in the Agilent Technologies 16700B-series Logic Analysis System Service Guide. For the purposes of testing the Agilent 16760A module performance, running untested system CPU board tests are not required. If these tests are not done, the Agilent 16760A performance test is not affected.

d When the self-tests are complete, select Quit to exit the test menu.

e Record a PASS in the Performance Test Record if all module self-tests pass.

4 Set up the logic analysis system.

a In the Session Manager window, select "Start Session" to re-launch a logic analysis session.

b In the Logic Analysis System window, select the module icon, then select Setup and Trigger. A Setup and Trigger window will appear.

c In the Setup and Trigger window, click on the Calibration tab. Follow the instructions under the Calibration tab to perform an operational accuracy calibration on the Agilent 16760A module.

Repeat the above step for each single-card Agilent 16760A module installed in the mainframe that is being tested. If any calibration status returns "failed," then the Agilent 16760A module requires repair. If the calibration status returns "passed" for both pods, then record a PASS in the performance test record at the end of this chapter.

d Proceed to the next section when the operational accuracy calibration is complete.

ManualsPlus.com

Initialize the test equipment for minimum data eye width/minimum clock interval test

1 Turn on the required test equipment. Let all of the test equipment and the logic analyzer warm up for 30 minutes before beginning any test.

2 Set up the pulse generator.

a Set the frequency of the pulse generator. We will test in the 200 Mb/s mode first.

The logic analyzer will be tested using a double-edge clock. The test frequency is half the test clock rate because data is acquired on both the rising edge and the falling edge of the clock. Set the frequency to 100 MHz plus the frequency uncertainty of the pulse generator, plus a test margin of 1%.

For example, if you are using an 8133A pulse generator, the frequency accuracy is ±1% of setting. Use a test margin of 1%. Set the frequency to 100 MHz plus 2% (102 MHz).

b Set the rest of the pulse generator parameters to the values shown in the following table.

Pulse Generator Setup

Timebase	Pulse Channel 2	Trigger	Pulse Channel 1
Mode: Int	Mode: Pulse ÷ 1	Disable (LED on)	Mode: Square
Freq: was set in previous step.	Delay: (not available in pulse mode)		Delay: 0 ps
	Width: Initially set to 1.5 ns. Change later (on page 48).		Width: (not available in square mode)
	Ampl: 0.25 V		Ampl: 0.25 V
	Offs: 1.0 V		Offs: 1.0 V
	Output: Enable (LED off)		Output: Enable (LED off)
	Comp: Normal (LED off)		Comp: Normal (LED off)
	Limit: Off (LED off)		Limit: Off (LED off)
	$\overline{\text{Output}}$: Enable (LED off)		$\overline{\text{Output}}$: Enable (LED off)

ManualsPlus.com

3 Set up the oscilloscope.

a Set up the oscilloscope according to the following tables.

Oscilloscope Setup

Setup: Channel 1	Setup: Ch. 1 Probe	Setup: Channel 2	Setup: Ch. 2 Probe
On	Attenuation: 1.00:1	On	Attenuation: 1.00:1
Scale: 50 mV/div	Units: Volts	Scale: 50 mV/div	Units: Volts
Offset: 1 V	Attenuation Units: Ratio	Offset: 1 V	Attenuation Units: Ratio
Coupling: DC	External Gain: (n/a)	Coupling: DC	External Gain: (n/a)
Input: 50 ohm	Skew: (Set later. See page 47)	Input: 50 ohm	Skew: 0.0 seconds
	External Offset: (n/a)		External Offset: (n/a)

Setup: Channel 3	Setup: Channel 4
Off	Off

Setup: Horizontal	Setup: Trigger	Setup: Acquisition	Setup: Display
Scale: 500 ps/div	Mode: Edge	Sampling Mode: Equiv. Time	Waveforms: Connect dots
Position: 800 ps	Source: Channel 1	Memory Depth: Automatic	Persistence: Minimum
Reference: Center	Level: 1.00 V	Averaging: Enabled	Grid: On (and set intensity)
Delayed: not selected	Edge: Rising Edge	# of Averages: 4	Backlight Saver: as preferred
	Sweep: Auto		

Measure: Markers
Mode: Manual placement
All else: (n/a)

ManualsPlus.com

Connect the test equipment for the minimum clock interval/minimum eye width test

Connect the 16760A Logic Analyzer Pod to the 8133A Pulse Generator

1. Connect a Transition Time Converter (if required—see page 39) to each of the four outputs of the 8133A pulse generator: Channel 1 OUTPUT, Channel 1 $\overline{\text{OUTPUT}}$, Channel 2 OUTPUT, Channel 2 $\overline{\text{OUTPUT}}$.
2. Connect the two SMA/Flying Lead test connectors (see "To assemble the SMA/Flying Lead test connectors" on page 34) *with* 50 ohm terminators to the Transition Time Converters at the 8133A pulse generator Channel 1 OUTPUT and Channel 1 $\overline{\text{OUTPUT}}$. (If Transition Time Converters are not required, connect the SMA/Flying Lead test connectors directly to the pulse generator outputs.)
3. Connect the two SMA/Flying Lead test connectors *without* 50 ohm terminators to the Transition Time Converters at the 8133A pulse generator Channel 2 OUTPUT and Channel 2 $\overline{\text{OUTPUT}}$. (If Transition Time Converters are not required, connect the SMA/Flying Lead test connectors directly to the pulse generator outputs.)
4. Connect an E5382A Flying Lead Probe Set to Pod 1 of the 16760A logic analyzer.
5. Connect the E5382A Flying Lead Probe Set's CLK lead to the pin strip of the SMA/Flying Lead connector at the 8133A pulse generator's Channel 1 OUTPUT.

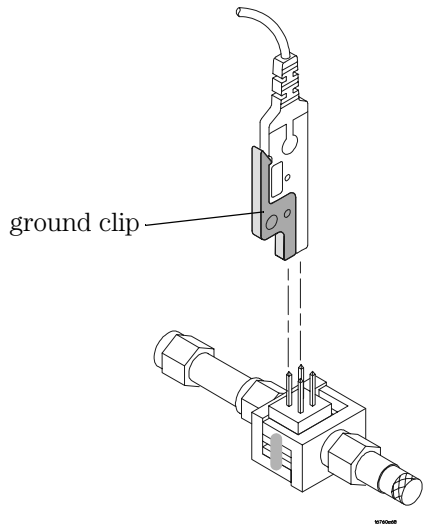

ManualsPlus.com

NOTE: Be sure to use the black ground clip (supplied with the E5382A Flying Lead Probe Set) and orient the leads so that the black clip is connected to one of the SMA/Flying Lead connector's ground pins!

6 Connect the E5382A Flying Lead Probe Set's $\overline{\text{CLK}}$ lead to the SMA/Flying Lead connector at the 8133A pulse generator's Channel 1 $\overline{\text{OUTPUT}}$. Again, be sure to use the black ground clip and orient the leads so that the black clip is connected to ground.

7 Connect the E5382A Flying Lead Probe Set's bits 6 and 14 to the SMA/Flying Lead test connector's pin strip connector at the 8133A pulse generator's Channel 2 OUTPUT.

8 Connect the E5382A Flying Lead Probe Set's bits 2 and 10 to the SMA/Flying Lead test connector's pin strip connector at the 8133A pulse generator's Channel 2 $\overline{\text{OUTPUT}}$.

Connect the 8133A Pulse Generator Output to the 54845A Oscilloscope

9 Attach Male BNC to Female SMA adapters to Channels 1 and 2 on the 54845A oscilloscope.

10 Attach one end of an SMA cable to the Male BNC to Female SMA adapter on Channel 1 of the oscilloscope.

11 Attach the other end of the SMA cable to the SMA/Flying Lead connector at the Channel 2 OUTPUT of the 8133A pulse generator.

12 Attach one end of the other SMA cable to the Male BNC to Female SMA adapter on Channel 2 of the oscilloscope.

13 Attach the other end of the SMA cable to the SMA/Flying Lead connector at the Channel 2 $\overline{\text{OUTPUT}}$ of the 8133A pulse generator.

ManualsPlus.com

Set up the test equipment

Next, verify and adjust the pulse generator's DC offset, deskew the oscilloscope, and measure and adjust the pulse width.

Verify and adjust 8133A pulse generator DC offset

1. On the 54845A oscilloscope, select Measure from the menu bar at the top of the display.
2. Select Markers...
3. In the Markers Setup window set marker "Ay" to 0.875 V, and set marker "By" to 1.125 V.

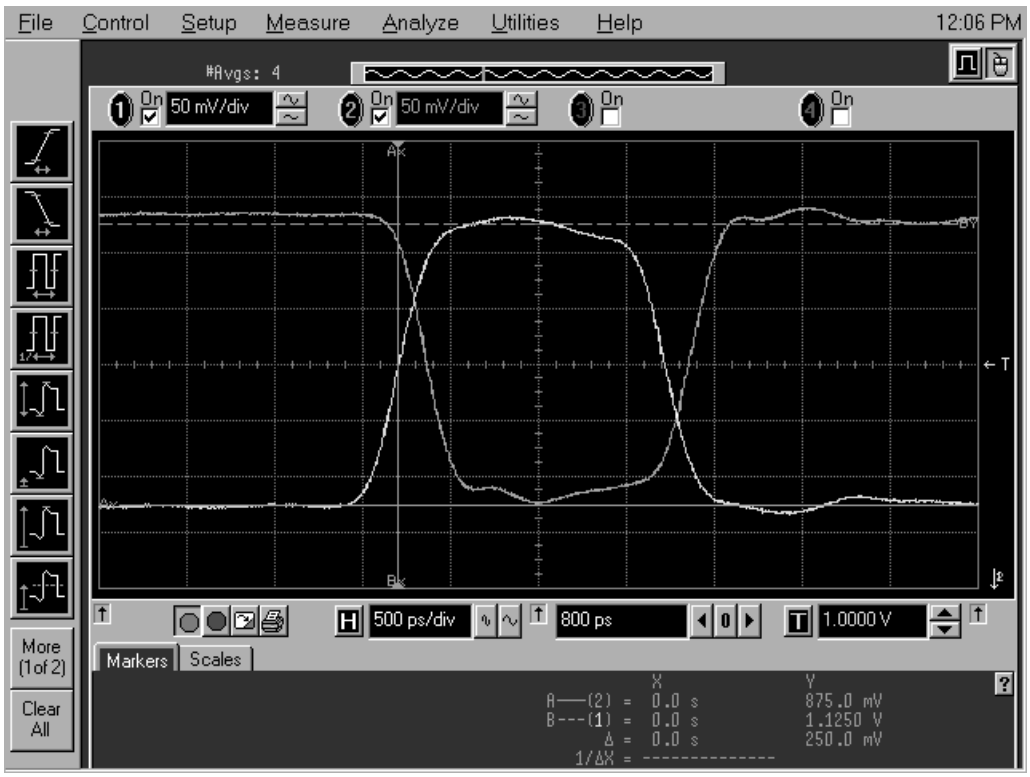

4. Observe the waveforms on the oscilloscope display. If they are not centered within the "Ay" and "By" markers, adjust the 8133A pulse generator's Channel 2 OFFSET until the waveforms are centered as well as possible. (The resolution of the 8133A OFFSET setting is 20 mV.)

ManualsPlus.com

Deskew the oscilloscope

This procedure neutralizes any skew in the oscilloscope's waveform display.

1 On the 54845A oscilloscope, change the Horizontal scale from 500 ps/div to 200 ps/div. You can do this using the large knob in the Horizontal setup section of the front panel.

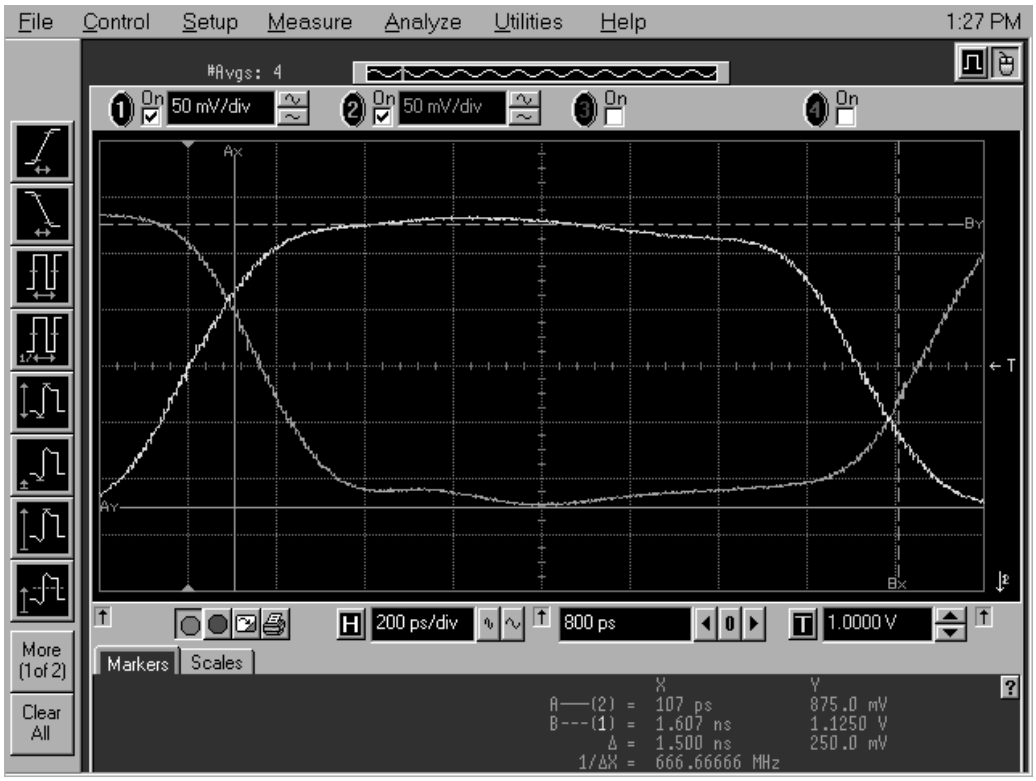

2 Select Setup from the menu bar at the top of the oscilloscope display.

3 Select Channel 1.

4 Select Probes.

NOTE: If the Probes dialog obscures the waveform display, select Utilities, User Preferences..., and in the Dialog section choose Transparent. Then position the Probes dialog so you can see the horizontal crossings of the waveforms.

5 Select Skew </> to deskew Channel 1 and Channel 2 signals so that both channels cross the 54845A horizontal center line at the same time, at both ends of the eye (both crossings of the horizontal center line). The

ManualsPlus.com

horizontal center of the graticule line is at 1 volt because the vertical offset was set to 1 volt in the oscilloscope setup described on page 43.

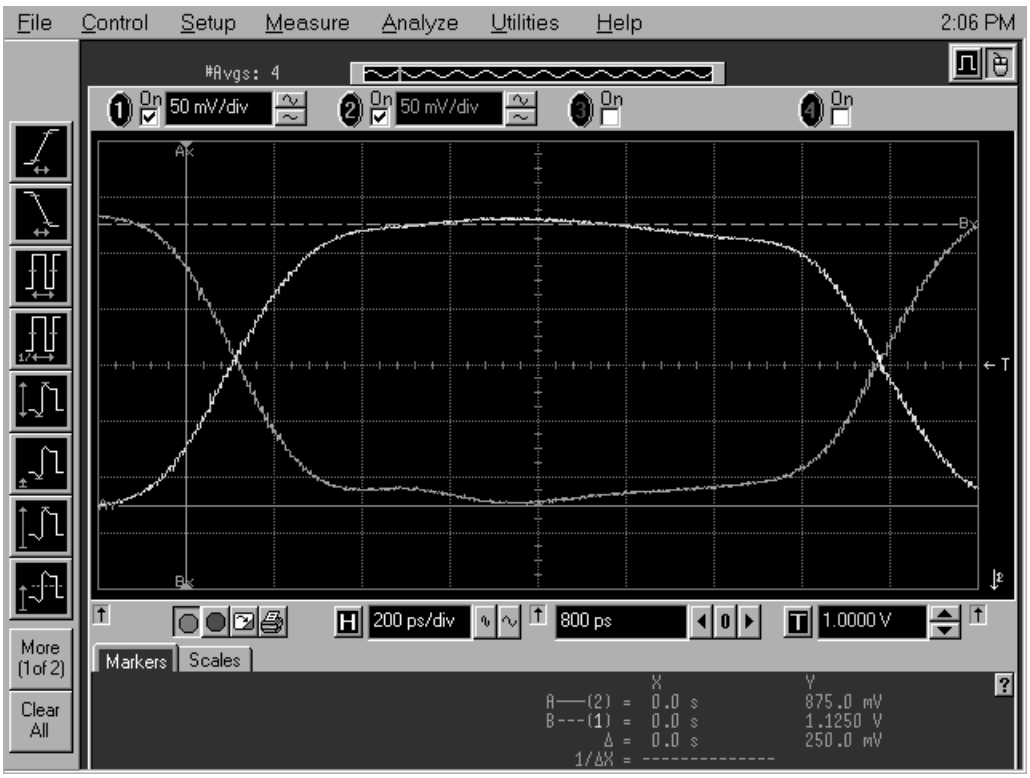

6 Select Close in the Probe Setup window.

7 Select Close in the Channel Setup window.

Adjust the measured pulse width to 1.5 ns

The pulse generator's pulse width was set to 1.5 ns (in the setup on page 42). In this procedure, you will use the oscilloscope's measurement markers to measure the actual pulse width in the test setup. Then you will adjust the pulse generator so that the measured pulse width is as specified.

1 Observe the 54845A oscilloscope display. Change the Channel 2 pulse width of the 8133A pulse generator so that the pulse width measured at 1 volt on the oscilloscope is equal to 1.5 ns minus the measurement uncertainty and display resolution of the oscilloscope, further reduced by 35 ps for test margin.

If you are using the 54845A/B oscilloscope, the measurement uncertainty

ManualsPlus.com

is ±((0.007% * Δt) + (full scale/2x memory depth) + 30 ps) ≅ ±30 ps. Add 5 ps for display resolution. Add 35 ps test margin.

1500 ps - 30.15 ps - 5 ps - 35 ps = 1430 ps. Set the pulse width as measured on the 54845A/B oscilloscope to 1430 ps.

On the oscilloscope move the Ax and Bx markers to the crossing points of the pulse and the horizontal center line. Read the pulse width at the bottom of the oscilloscope display. It is displayed as “Δ=”.

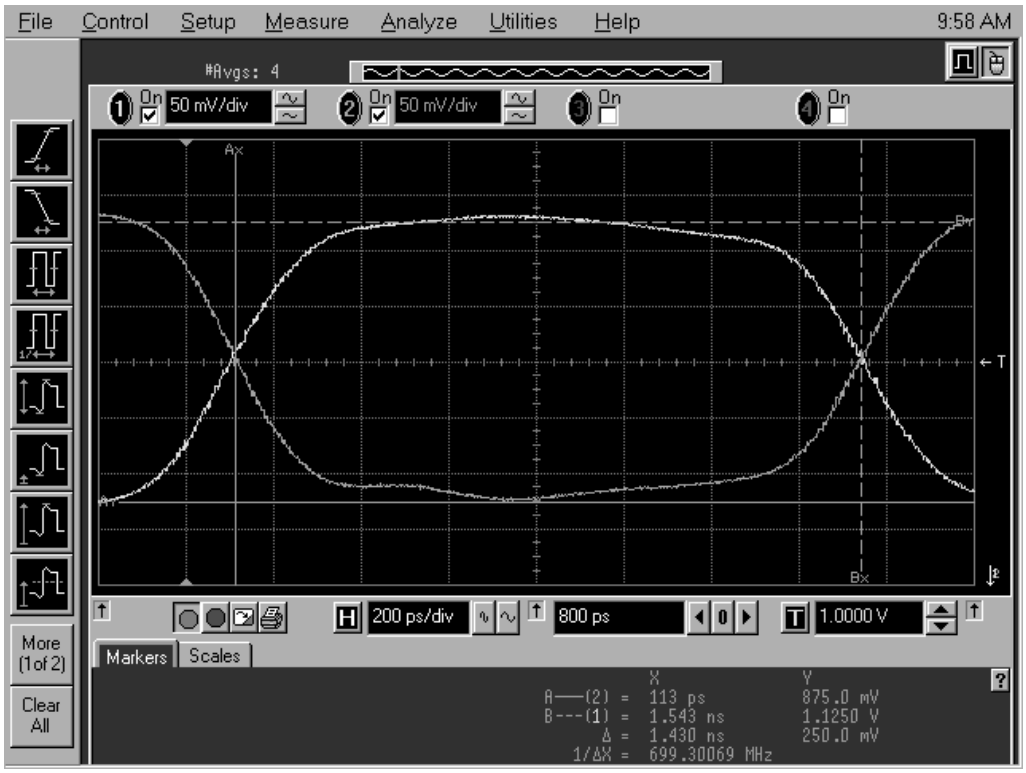

ManualsPlus.com

Configure the logic analysis system

1 Configure the Sampling settings.

a In the Agilent 16700-series logic analysis system's System window, select the 16760A logic analyzer icon, then select "Setup and Trigger". A Setup and Trigger window will appear.

b In the logic analyzer Setup and Trigger window, select the Sampling tab (if it is not already selected).

c Under the Sampling tab, select State Mode.

d Under State Mode Controls, select the "200 Mb/s / 32 M State" mode.

e Under Clock Setup, at the bottom of the Clock J column, select the clock edge field and set the J clock to "Both Edges".

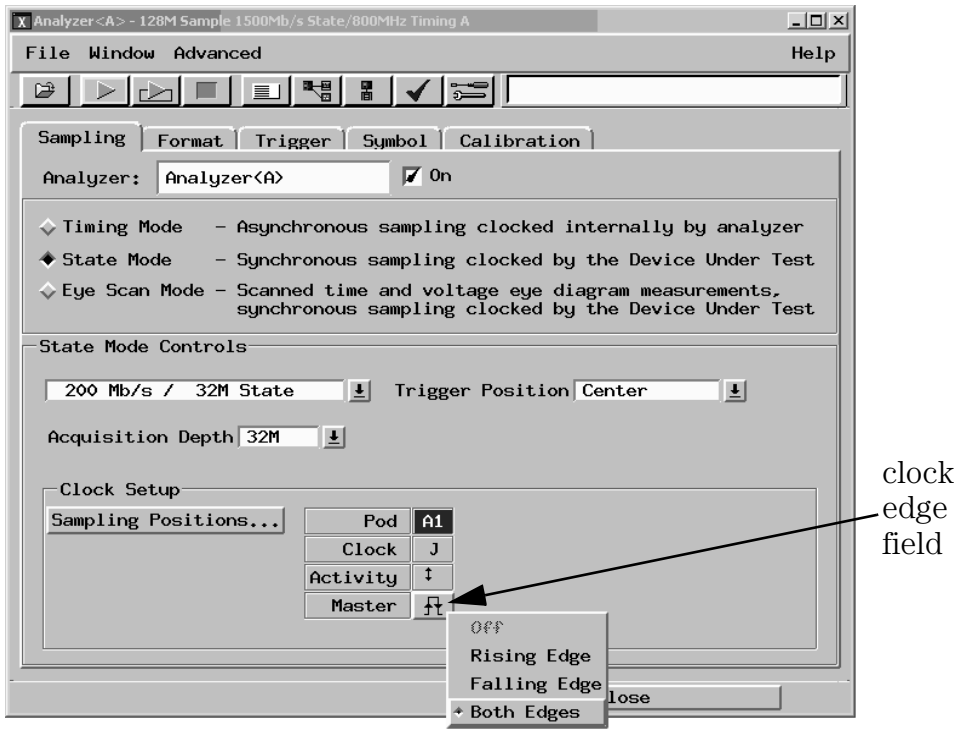

2 Configure the Acquisition settings.

a In the logic analyzer Setup and Trigger window, select the Trigger tab.

b Under the Trigger tab, select the Settings subtab.

c Select the Acquisition Depth field, then select 128K.

d Select the Trigger Position field, then select Start.

ManualsPlus.com

e Select the Count field, then select Off.

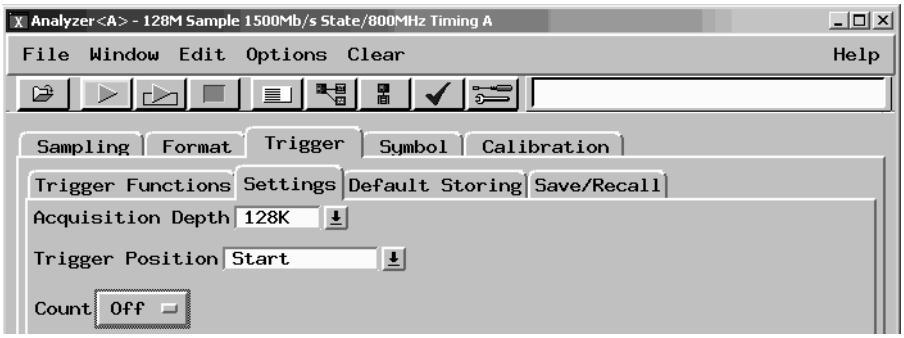

3 Configure the Format settings.

a In the logic analyzer Setup and Trigger window, select the Format tab.

b Under the Format tab, select Pod Assignment.

c In the Pod Assignment window, use the mouse to drag the pod from the Unassigned Pods column to the Analyzer 1 column.

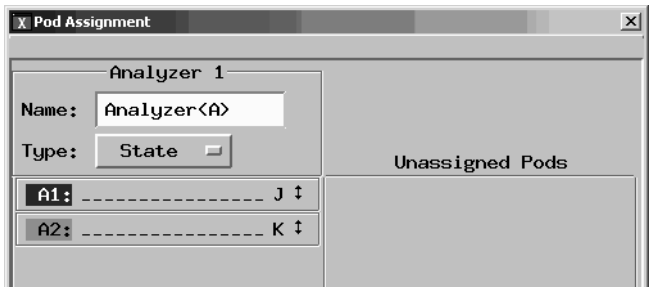

d Select Close to close the Pod Assignment window.

e Under the Format tab, use the scroll bar to scroll to the right so you can

ManualsPlus.com

see the fields for Pod 1.

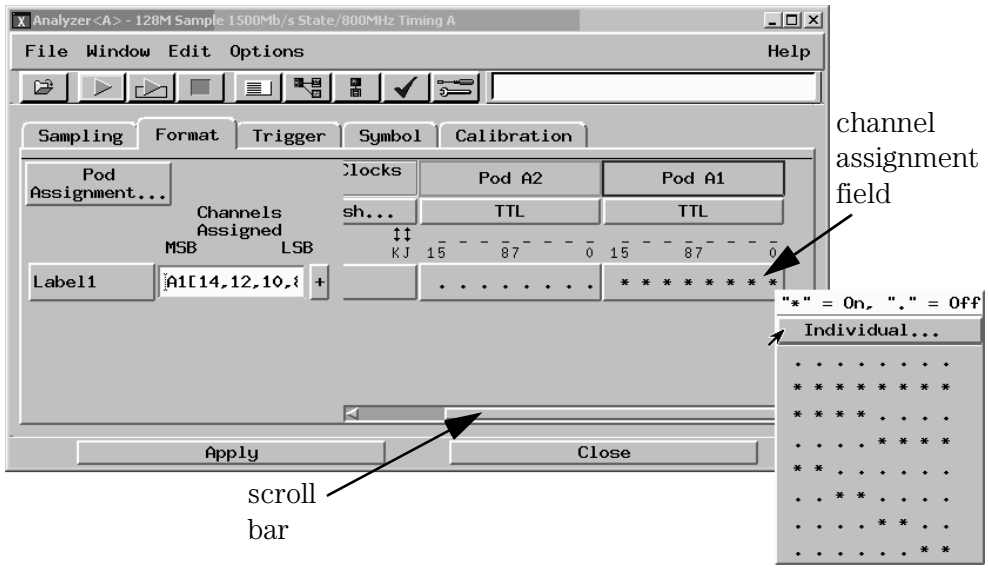

f Select the channel assignment field for the pod being tested, then select Individual in the pop-up menu.

g Using the mouse, select each asterisk to un-assign all data channels on the pod. Ensure all channels are un-assigned on all pods. Now assign channels 2, 6, 10, and 14 for the pod being tested (Pod 1). An asterisk (*) means that a channel is assigned.

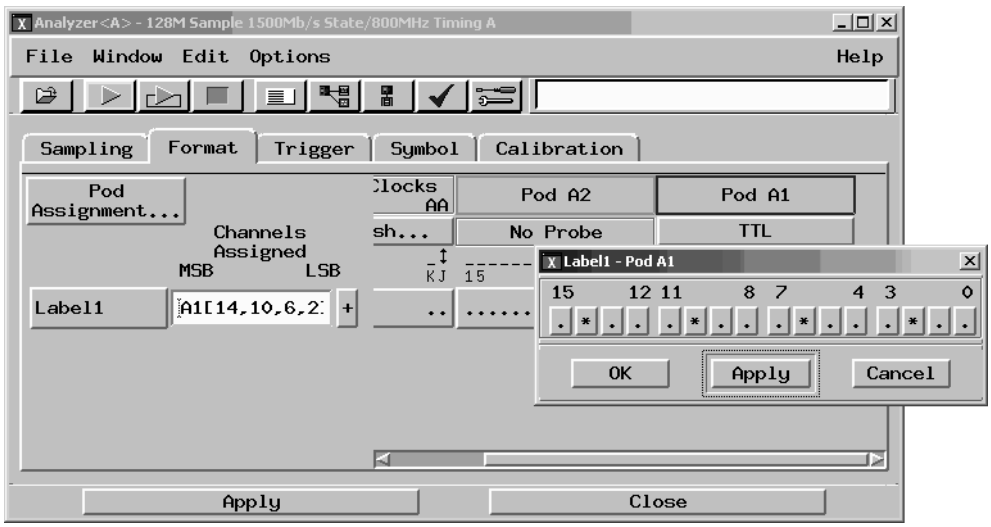

h Select OK to close the channel assignment window.

4 Configure the clock and data thresholds.

ManualsPlus.com

a Select the pod threshold field for the pod that you are going to test. The Pod threshold window will appear. You must have the E5382A Flying Lead Probe attached to the pod you will be testing so that the pod threshold dialog will appear when you select the pod threshold field.

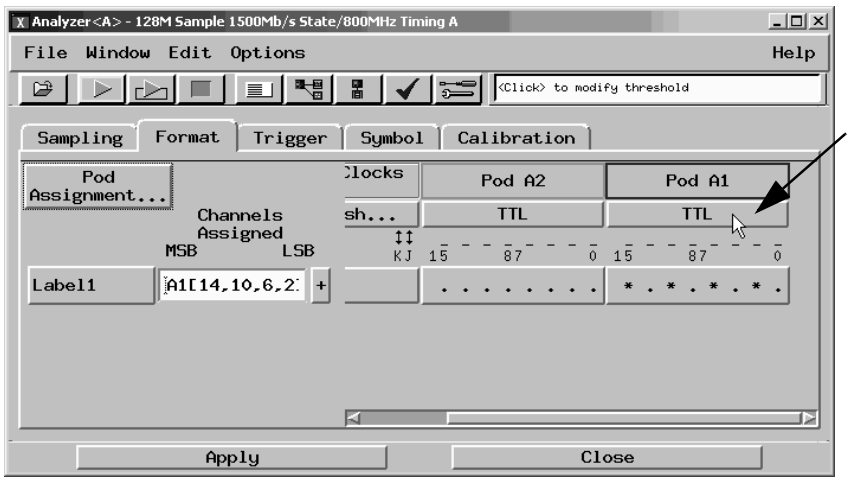

b In the Pod threshold window, select User Defined and set the threshold value to 1 volt. The “Apply threshold settings to all pods” check box doesn’t matter.

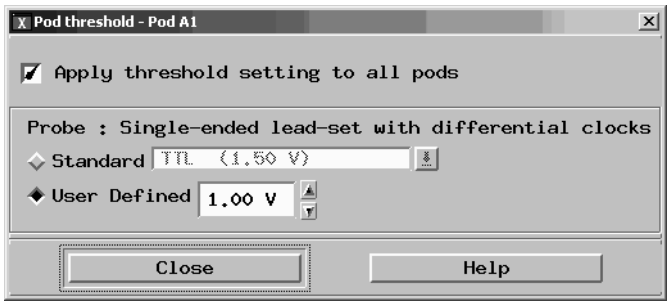

c Select Close to close the Pod threshold window.

d Under the Format tab, use the scroll bar at the bottom of the window to

ManualsPlus.com

scroll to the left and select “Clk Thresh...”.

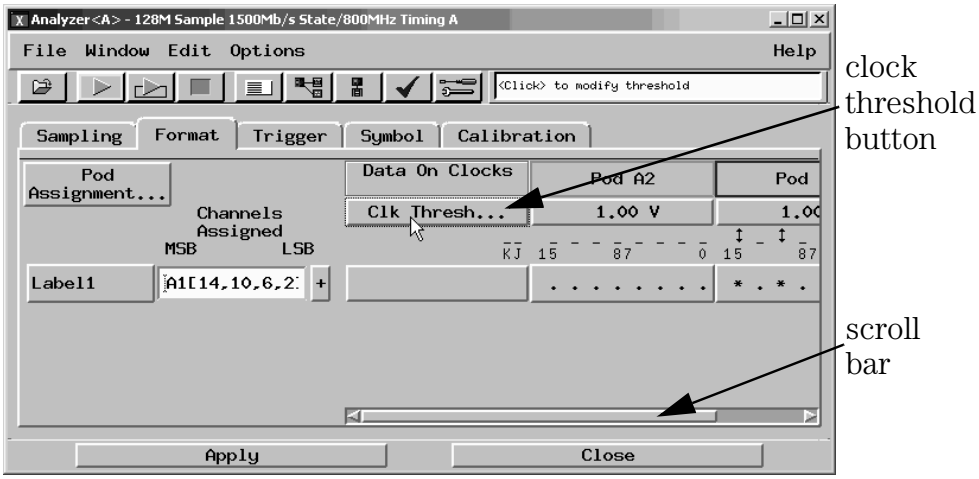

e In the Clock Thresholds window, select the J clock threshold button, then in the J threshold window select Differential.

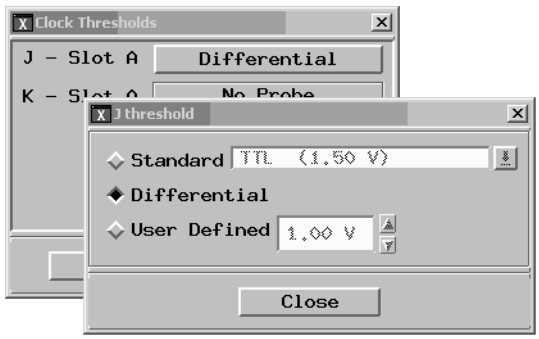

f Select Close to close the J threshold window. Select Close to close the Clock Thresholds window.

5 Configure the Trigger settings.

a In the logic analyzer Setup and Trigger window, under the Trigger tab, select the Trigger Functions subtab.

b Select “Find pattern n times.”

c Select the Replace button.

ManualsPlus.com

d Enter “A” in the “Label 1 =” field.

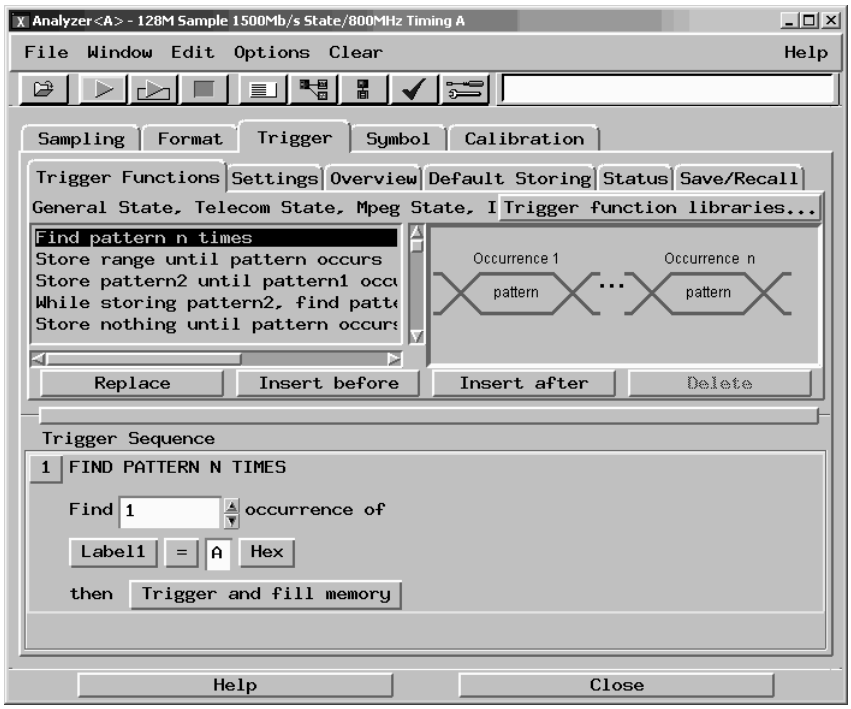

Adjust sampling positions using Eye Finder

1 In the Setup and Trigger window, select the Sampling tab, then select the “Sampling Positions...” button (which is in the Clock Setup area of the window). The Eye Finder window will appear. Ensure that the “Sampling Positions” tab is selected.

2 From the menu bar in the Eye Finder window, select Results.

3 Select “Remove All Eye Finder Data” if this selection is available (if it is not ghosted). Select “Yes” to confirm that you want to remove the data.

4 Select Label1, then select Expand (if not already expanded).

5 If the blue bars in the Eye Finder display are not vertically aligned:

a Grab the right-most blue bar in the “Label1 (4 channels)” row with the mouse pointer and move it all the way to the left and release the mouse button. This will vertically align all of the blue bars.

6 Select the Sampling Positions tab in the Eye Finder window.

7 Using the mouse pointer, grab the blue bar for “Label 1 (4 channels)” and

ManualsPlus.com

move it to the recommended starting position of 0.6 ns. All of the blue bars will follow.

8 Select Run Eye Finder (the large green bar).

9 Ensure that an eye appears for each bit near the recommended starting position. Depending on your test setup, the eye position may vary. Any skew between channel 1 and channel 2 of your pulse generator will cause the eye position to shift to the left or right in the Eye Finder display. A shift of up to 0.5 ns should be considered normal. The important point is that your Eye Finder display should look similar to the picture below (although it may be shifted left or right), and Eye Finder must be able to place the blue bars in the narrow eye.

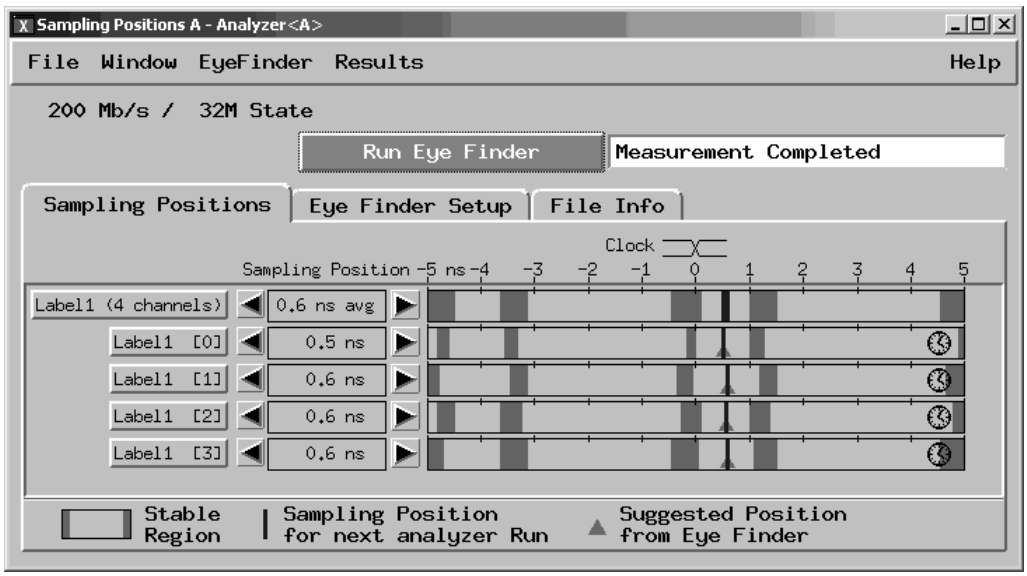

Re-aligning a stray channel

If the blue bar for a particular bit does not appear in its eye near the recommended starting position, then do the following steps to realign the sampling position of the stray channel. In the following example, the sampling position of one channel (Label1 [2]) must be realigned with the sampling position of the other channels. (The following example shows the

ManualsPlus.com

analyzer in the 1500 Mb/s mode.)

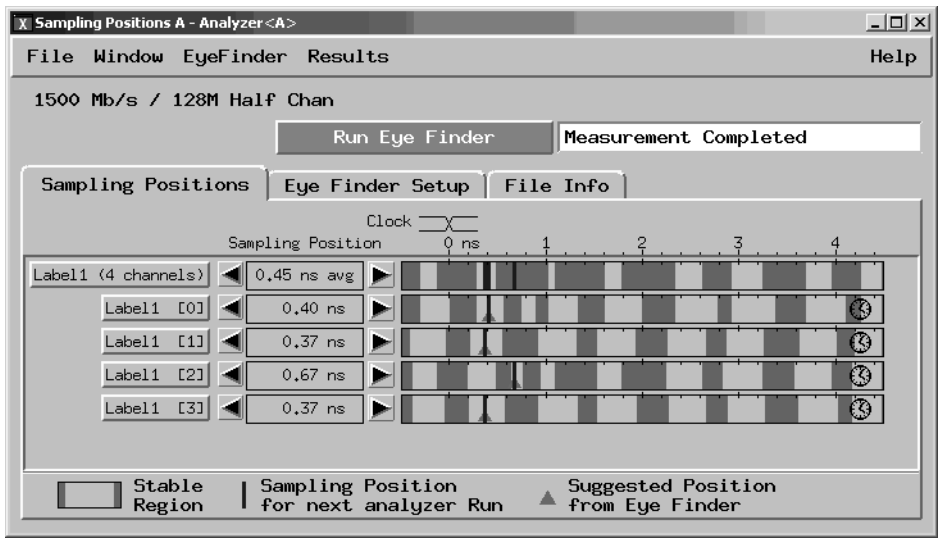

1 Using the mouse, drag the sample position (blue line) of a stray channel so that it is in the same eye as the other channels (drag channel Label1 [2] in the above example). The Suggested Position from Eye Finder (green triangle) will also move to the new eye.

2 Repeat the above step for all remaining stray channels.

3 Select Run Eye Finder. Eye Finder will recalculate the new sample positions based on the sample position changes. The following example shows all sampling positions aligned and in the correct eye (with the analyzer in the 1500 Mb/s mode).

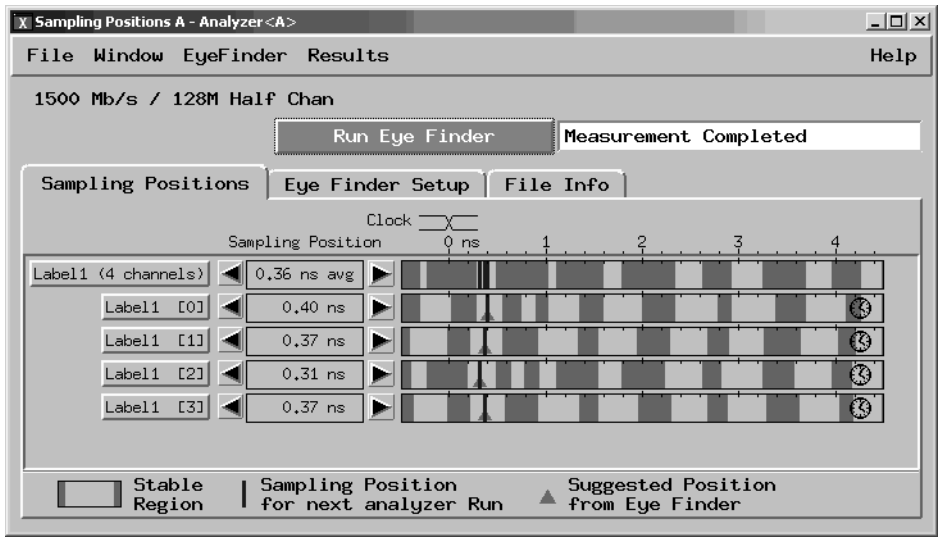

ManualsPlus.com

Test Pod 1 in 200 Mb/s mode

The steps that follow include pass/fail criteria.

Determine PASS/FAIL (1 of 2 tests)

1. PASS/FAIL: If an eye exists near the recommended starting position for every bit, and Eye Finder places a blue bar in the eye for each bit, then the logic analyzer passes this portion of the test.
2. If an eye does not exist near the recommended starting position for every bit or Eye Finder cannot place the blue bar in the eye, then the logic analyzer fails the test. Record the failure in the test record (shown on page 95).

Open and configure the Listing window.

a In the Setup and Trigger window, select Window from the menu bar, then select Slot n: Analyzer<n> (where n is the slot where the module under test is installed). At the pop-up menu, select Listing. The Listing window will appear.

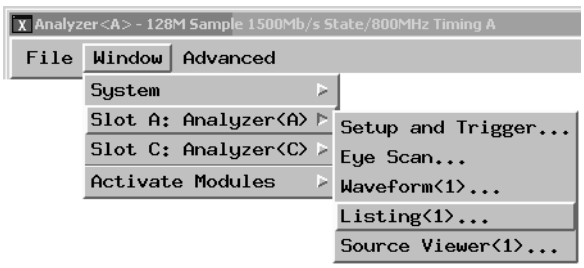

ManualsPlus.com

b In the Listing window, select the Markers tab.

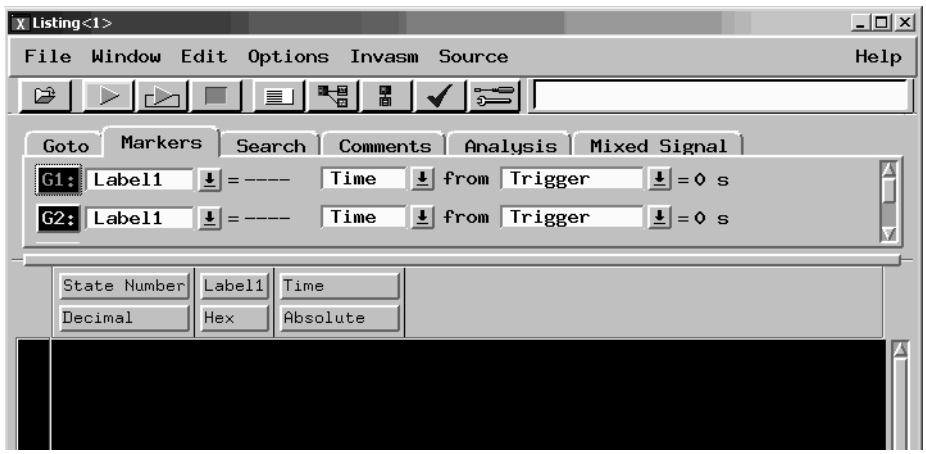

c Select the G1: button and the Markers Setup window will appear.

d Select the field immediately to the right of G1, and select Pattern.

e Select the field immediately to the right of G2, and select Pattern.

f Right-click on the Interval field (which is below G1 and G2) and select Delete.

g Select the field immediately to the right of “Data at” and select Beginning.

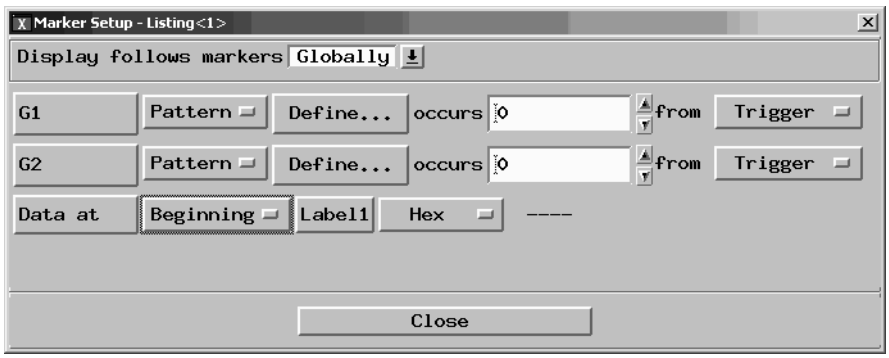

NOTE: Leave the marker Setup window open. You will be entering numeric values in the "occurs" field after acquiring the first run of test data.

1 Configure the Markers.

a In the logic analyzer Listing window, select the Run icon. This will load the logic analyzer memory with data so the markers can be configured. An error message will appear because the marker patterns are not yet specified.

ManualsPlus.com

b Select OK to close the error message window.

c In the Marker Setup window, select the G1 Define... button. The “Marker Pattern for <G1>” window will appear. In the pattern field, enter "a", then select Close.

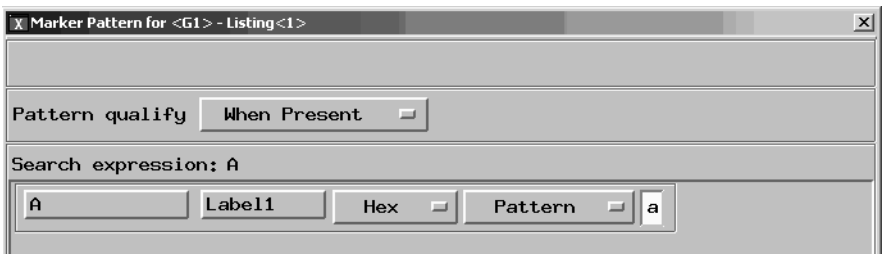

d In the Marker Setup window, select the G2 Define... button. The G2 Marker Pattern window will appear. In the pattern field, enter "5", then select Close.

e In the Marker Setup window, select the 'occurs' value field that corresponds to marker G1. Enter 65535.

f In the Marker Setup window, select the 'occurs' value field that corresponds to marker G2. Enter 65535, then press Enter.

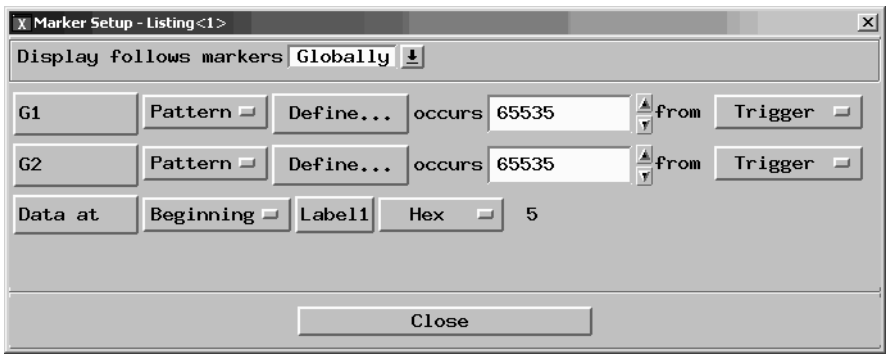

g Select Close.

2 In the Listing window, Select the Run Repetitive icon. The analyzer will run and the listing window will update every few seconds.

Determine PASS/FAIL (2 of 2 tests)

Pass/Fail Point: The Listing window is set up to search for the appropriate number of A's and 5's in the acquisition. If the logic analyzer does not detect the correct number of A’s and 5’s, an error window will appear. The window will be named 'Error - Listing', and it will say “Pattern NOT found

ManualsPlus.com

for marker...".

1 Let the logic analyzer run repetitive for about 1 minute. If no error message is displayed the test passes.

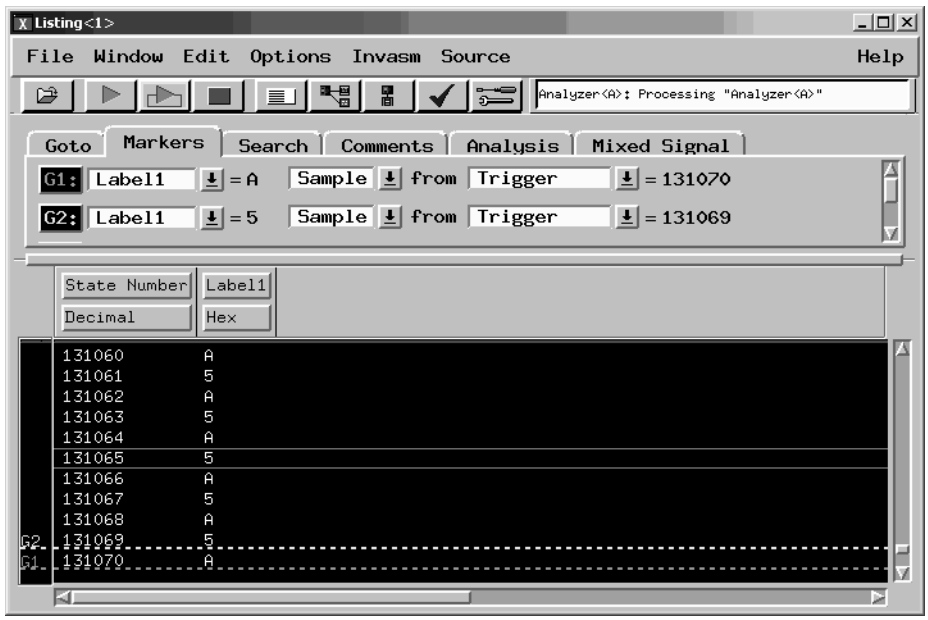

If the red error window "Error- Listing <1> Pattern NOT found..." appears during the minute or so that it runs repetitively, then the logic analyzer fails the test. Record the failure in the appropriate place on the test record.

NOTE: Be sure that the black ground clip is making good contact with the ground pin on the test connector.

2 After approximately 1 minute select the red stop button in the Listing window.

ManualsPlus.com

NOTE: As a point of curiosity, you may want to determine the absolute minimum pulse width and/or absolute maximum frequency at which data can be acquired. The “Performance Test Record” on page 95 does not include places for recording these values because the Performance Verification procedure only verifies that the logic analyzer meets specifications. Determination of additional parameters is not required, but may be performed at the discretion of the calibration laboratory.

On some pulse generators, the signal outputs may become slightly unstable for a very short period of time when the signal parameters are adjusted. Adjusting the pulse generator while the logic analyzer is running can cause a false failure.

If the Pattern NOT found error message appears while making an adjustment to the pulse generator select OK to close the window. If the message appears again after you have stopped adjusting the pulse generator and allowed a short settling time for the pulse generator, then the logic analyzer fails the test.

Test the complement of the bits (200 Mb/s mode)

Now test the logic analyzer using complement data.

1. On the 8133A pulse generator, in the PULSE setup for CHANNEL 2, select COMP.
2. Note that the signal on the oscilloscope has moved. Change the oscilloscope’s horizontal position to -600 ps (or as required) to center the measured pulse on the oscilloscope display.
3. Verify the DC offset and adjust it if necessary. See page 46.
4. Deskew the oscilloscope if necessary. See page 47.
5. Adjust the oscilloscope’s measurement markers to measure the pulse width. Set the markers so that Δ=1430 ps (this assumes you are using the 8133A pulse generator and the Infiniium oscilloscope). Adjust the pulse generator so that the pulse width is 1430 ps as measured by the markers.

ManualsPlus.com

See page 48 for details.

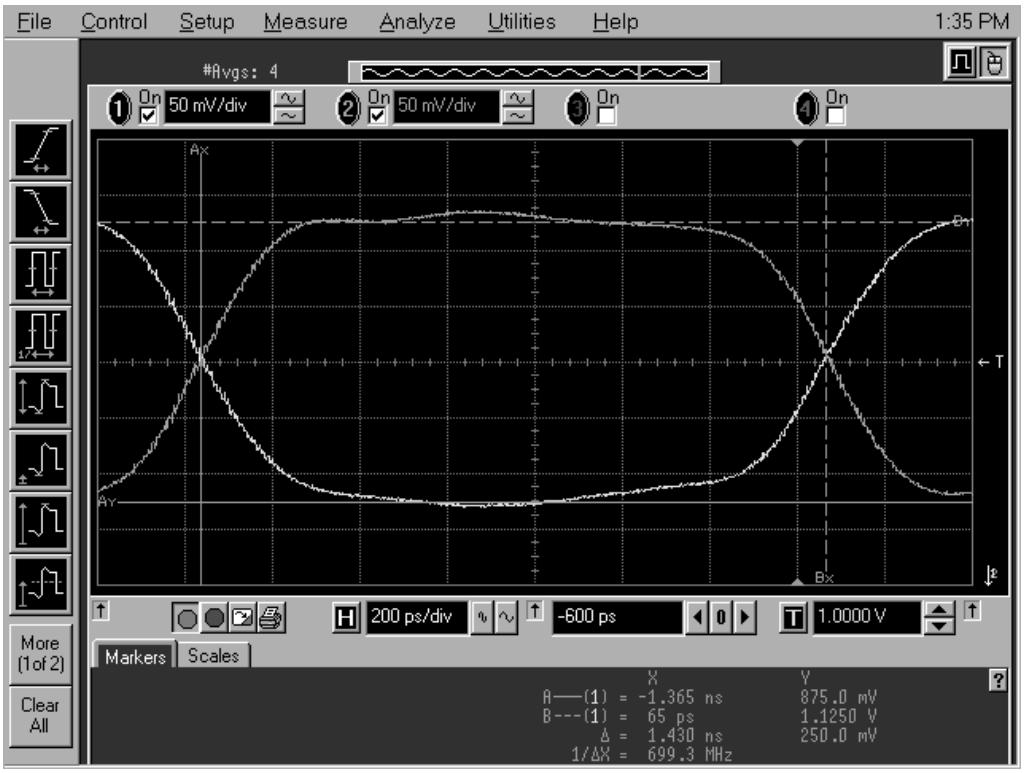

6 Adjust the sampling positions (run Eye Finder). See page 55.

7 Determine pass or fail (1 of 2 tests). See page 58.

8 Ensure that the Listing window is set up. See page 58.

9 Select the Run Repetitive icon in the Listing window.

10 Determine pass or fail (2 of 2 tests). See page 60.

ManualsPlus.com

Test Pod 2 in 200 Mb/s mode

1. Leave the first E5382A Flying Lead Probe Set connected to Pod 1 of the logic analyzer. Remove the Pod 1 flying leads 2, 6, 10, and 14 from the SMA/Flying Lead test connectors. Do not remove the flying leads that are connected to CLK and $\overline{\text{CLK}}$.
2. Connect the second E5382A Flying Lead Probe Set to Pod 2 of the logic analyzer.
3. Connect the Pod 2 E5382A Flying Lead Probe Set's bits 6 and 14 to the SMA/Flying Lead test connector's pin strip connector at the 8133A pulse generator's Channel 2 OUTPUT.
4. Connect the Pod 2 E5382A Flying Lead Probe Set's bits 2 and 10 to the SMA/Flying Lead test connector's pin strip connector at the 8133A pulse generator's Channel 2 $\overline{\text{OUTPUT}}$.
5. On the 8133A pulse generator, in the PULSE setup for CHANNEL 2, press the COMP button to return the outputs to normal.
6. Note that the signal on the oscilloscope has moved. Change the oscilloscope's horizontal position to 800 ps (or as required) to center the measured pulse on the oscilloscope display.
7. Verify the DC offset and adjust it if necessary. See page 46.
8. Deskew the oscilloscope if necessary. See page 47.
9. Readjust the pulse width from the pulse generator as measured on the oscilloscope to 1.5 ns. See page 48.
10. In the logic analyzer's Setup and Trigger window, Format tab, unassign all pod 1 bits. A Warning window will appear stating that the trigger function has become invalid. Select OK to close the Warning window.
11. Assign bits 2, 6, 10, and 14 of Pod 2.
12. Set the Pod 2 threshold to 1 volt (just as you did for Pod 1 on page 53).
13. In the "Setup and Trigger..." window, Format tab, use the scroll bar at the bottom of the window to scroll to the left. Ensure that the J clock threshold is set to Differential.
14. Re-establish the trigger function:
    - **a** In the logic analyzer's Setup and Trigger window, select the Trigger tab,

ManualsPlus.com

and the Trigger Functions subtab.

b Select “Find pattern n times” and select the “Replace” button.

c Enter “A” in the “Label 1 = “ field.

15 Adjust the sampling positions using Eye Finder. Be sure to expand “Label1 (4 channels)” and use the recommended starting position noted on page 56. Realign any stray channels if necessary. See page 56.

16 Determine pass or fail (1 of 2 tests). See page 58.

17 Ensure that the Listing window is set up. See page 58.

18 Select the Run Repetitive icon in the Listing window.

19 Determine pass or fail (2 of 2 tests). See page 60.

Test the complement of the bits (Pod 2, 200 Mb/s mode)

1 Test the complement of the bits. See page 62.

ManualsPlus.com

Test Pod 1 in the 400 Mb/s mode

1. Disconnect the Pod 2 E5382A Flying Lead Probe Set's bits 2, 6, 10, and 14 from the SMA/Flying Lead test connectors' pin strip connectors.

   The original E5382A Flying Lead Probe Set should still be connected to Pod 1. The J clock on Pod 1 will be used for all tests.

2. Connect the Pod 1 E5382A Flying Lead Probe Set's bits 6 and 14 to the SMA/Flying Lead test connector's pin strip connector at the 8133A pulse generator's Channel 2 OUTPUT.

3. Connect the Pod 1 E5382A Flying Lead Probe Set's bits 2 and 10 to the SMA/Flying Lead test connector's pin strip connector at the 8133A pulse generator's Channel 2 $\overline{\text{OUTPUT}}$.

4. On the 8133A pulse generator, in the PULSE setup for CHANNEL 2, press the COMP button to return the outputs to normal.

5. Note that the signal on the oscilloscope has moved. Change the oscilloscope's horizontal position to 800 ps (or as required) to center the measured pulse on the oscilloscope display.

6. Verify the DC offset and adjust it if necessary. See page 46.

7. Set the frequency of the pulse generator. The logic analyzer will be tested using a double-edge clock. The test frequency is half the test clock rate because data is acquired on both the rising edge and the falling edge of the clock. Set the frequency to 200 MHz plus the frequency uncertainty of the pulse generator, plus a test margin of 1%.

   For example, if you are using an 8133A pulse generator, the frequency accuracy is ±1% of setting. Use a test margin of 1%. Set the frequency to 200 MHz plus 2% (204 MHz).

8. Verify the oscilloscope Deskew and adjust if necessary. See page 47.

9. Adjust the measured pulse width from the pulse generator to 1.5 ns (minus the test margin) as described on page 48.

10. In the logic analyzer "Setup and Trigger..." window, select the Sampling tab. In the "State Mode Controls" section, select the "400 Mb/s / 32M State" mode. The mode will change to 400 Mb/s and the clock setup will change to "Rising Edge."

11. In the logic analyzer's Setup and Trigger window, Format tab, unassign all

ManualsPlus.com

pod 2 bits.

12 Assign bits 2, 6, 10, and 14 of Pod 1.

13 Ensure that the Pod 1 threshold is set to 1 volt. See page 53.

14 In the “Setup and Trigger...” window, Format tab, ensure that the J clock threshold is still set to Differential.

15 Re-establish the trigger function:

- **a** In the logic analyzer’s Setup and Trigger window, select the Trigger tab, and the Trigger Functions subtab.
- **b** Select “Find pattern n times” and select the “Replace” button.
- **c** Enter “A” in the “Label 1 = “ field.

Determine and set Eye Finder Position (400 Mb/s mode)

16 In the “Setup and Trigger...” window, Sampling tab, Clock Setup area, ensure that the clock mode is set to “Rising Edge”.

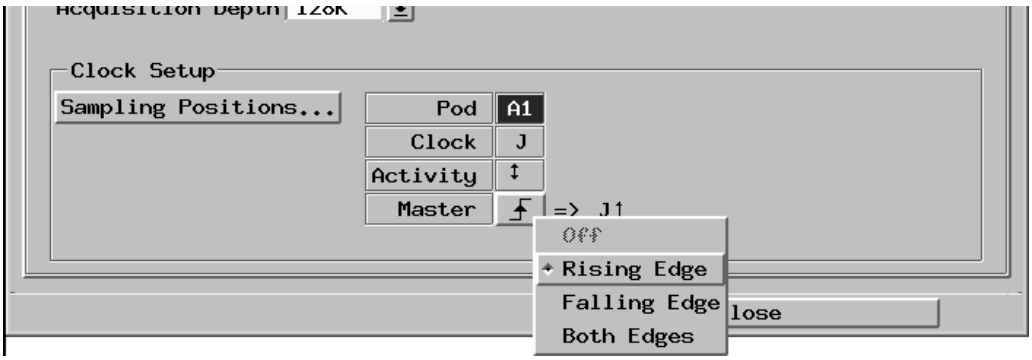

17 In the Eye Finder (Sampling Positions) window, expand “Label1 (4 channels)”.

18 Grab the blue bar for “Label1 (4 Channels)” and move it to approximately 0.9 ns. All blue bars will follow.

19 Run Eye Finder and note the average sampling position chosen by Eye Finder:_____ns. In the following example, the average sampling position is 0.9 ns. Note that in this step, you place the blue bars in the first narrow window (not the wide window) that appears to the right of zero in the Eye Finder display. Then run Eye Finder. The position may be different based on your test setup. Bring stray channels into alignment if necessary. See

ManualsPlus.com

page 56.

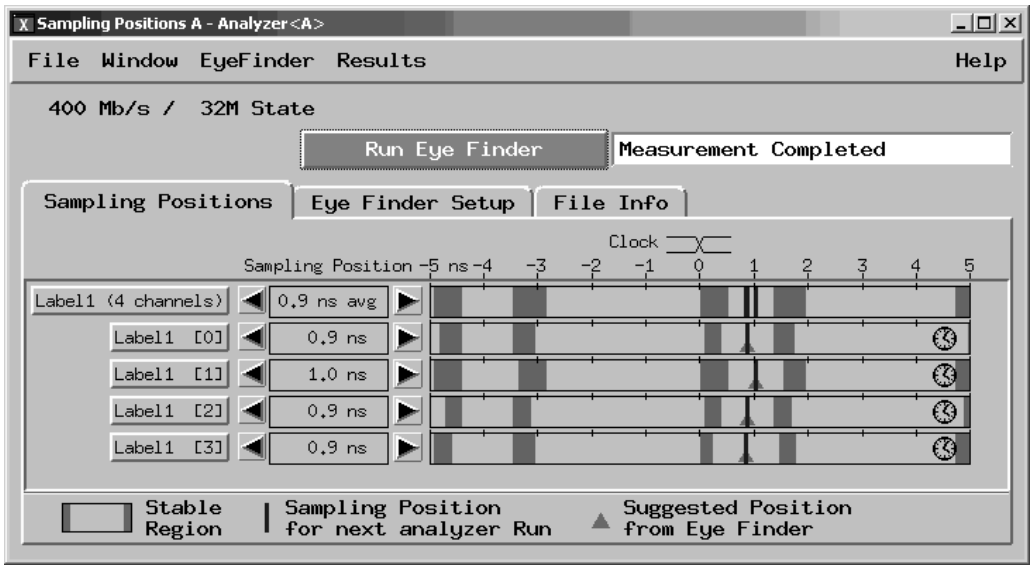

20 In the “Setup and Trigger...” window, Clock Setup area, set the clock mode to “Both Edges.”

21 In the Eye Finder window, align the blue bars vertically. See page 55.

22 Grab the blue bar for “Label1 (4 Channels)” and move it to the recommended starting position you noted in the prior step.

23 Run Eye Finder again. Some eyes may close, but the eyes in the sampling position you chose on page 67 should remain open.

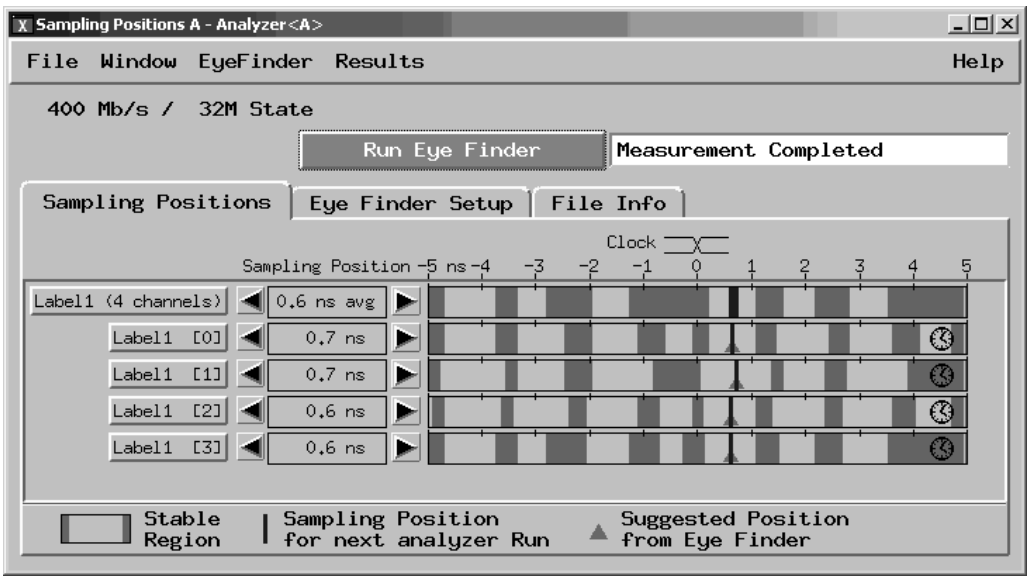

ManualsPlus.com

24 Perform the procedure “Determine PASS/FAIL (1 of 2 tests)” on page 58.

25 Select the Run Repetitive icon in the Listing window.

26 Perform the procedure “Determine PASS/FAIL (2 of 2 tests)” on page 60.

Test the complement of the bits (Pod 1, 400 Mb/s mode)

Now test the logic analyzer using complement data.

1 On the 8133A pulse generator, in the PULSE setup for CHANNEL 2, select COMP.

2 Note that the signal on the oscilloscope has moved. Change the oscilloscope’s horizontal position to -600 ps (or as required) to center the measured pulse on the oscilloscope display.

3 Verify the DC offset and adjust it if necessary. See page 46.

4 Deskew the oscilloscope. See page 47.

5 Verify that the pulse width is set to 1.5 ns. See page 48.

6 Run Eye Finder.

7 Perform the procedure “Determine PASS/FAIL (1 of 2 tests)” on page 58.

8 Select the Run Repetitive icon in the Listing window.

9 Perform the procedure “Determine PASS/FAIL (2 of 2 tests)” on page 60

ManualsPlus.com

Test Pod 2 in 400 Mb/s mode

1. Leave the first E5382A Flying Lead Probe Set connected to Pod 1 of the logic analyzer. Remove the Pod 1 flying leads 2, 6, 10, and 14 from the SMA/Flying Lead test connectors. Do not remove the flying leads that are connected to CLK and $\overline{\text{CLK}}$ flying leads.
2. Connect the Pod 2 E5382A Flying Lead Probe Set's bits 6 and 14 to the SMA/Flying Lead test connector's pin strip connector at the 8133A pulse generator's Channel 2 OUTPUT.
3. Connect the Pod 2 E5382A Flying Lead Probe Set's bits 2 and 10 to the SMA/Flying Lead test connector's pin strip connector at the 8133A pulse generator's Channel 2 $\overline{\text{OUTPUT}}$.
4. On the 8133A pulse generator, in the PULSE setup for CHANNEL 2, press the COMP button to return the outputs to normal.
5. Note that the signal on the oscilloscope has moved. Change the oscilloscope's horizontal position to 800 ps (or as required) to center the measured pulse on the oscilloscope display.
6. Verify the DC offset and adjust it if necessary. See page 46.
7. Deskew the oscilloscope if necessary. See page 47.
8. Adjust the measured pulse width from the pulse generator to 1.5 ns (minus the test margin) as described on page 48.
9. In the logic analyzer's Setup and Trigger window, Format tab, unassign all pod 1 bits.
10. Assign bits 2, 6, 10, and 14 of Pod 2.
11. Verify that the Pod 2 threshold is set to 1 volt (just as you did for Pod 1 on page 53).
12. In the "Setup and Trigger..." window, Format tab, use the scroll bar at the bottom of the window to scroll to the left. Ensure that the J clock threshold is set to Differential.
13. Re-establish the trigger function:
    - **a** In the logic analyzer's Setup and Trigger window, select the Trigger tab, and the Trigger Functions subtab.
    - **b** Select "Find pattern n times" and select the "Replace" button.

ManualsPlus.com

c Enter “A” in the “Label 1 = “ field.

14 Adjust the sampling positions using Eye Finder. Be sure to expand “Label1 (4 channels)”. Use the starting position you noted on page 67. Realign any stray channels if necessary. See page 56.

15 Determine pass or fail (1 of 2 tests). See page 58.

16 Ensure that the Listing window is set up. See page 58.

17 Select the Run Repetitive icon in the Listing window.

18 Determine pass or fail (2 of 2 tests). See page 60.

Test the complement of the bits (Pod 2, 400 Mb/s mode)

1 Test the complement of the bits on Pod 2. You can use the procedure “Test the complement of the bits (Pod 1, 400 Mb/s mode)” on page 69 as a guideline.

ManualsPlus.com

Test Pod 1 in the 800 Mb/s mode

1. Disconnect the Pod 2 E5382A Flying Lead Probe Set's bits 2, 6, 10, and 14 from the SMA/Flying Lead test connectors' pin strip connectors.

   The original E5382A Flying Lead Probe Set should still be connected to Pod 1. The J clock on Pod 1 will be used for all tests.

2. Connect the Pod 1 E5382A Flying Lead Probe Set's bits 6 and 14 to the SMA/Flying Lead test connector's pin strip connector at the 8133A pulse generator's Channel 2 OUTPUT.

3. Connect the Pod 1 E5382A Flying Lead Probe Set's bits 2 and 10 to the SMA/Flying Lead test connector's pin strip connector at the 8133A pulse generator's Channel 2 $\overline{\text{OUTPUT}}$.

4. On the 8133A pulse generator, in the PULSE setup for CHANNEL 2, press the COMP button to return the outputs to normal.

5. Note that the signal on the oscilloscope has moved. Change the oscilloscope's horizontal position to 800 ps (or as required) to center the measured pulse on the oscilloscope display.

6. Verify the DC offset and adjust it if necessary. See page 46.

7. Set the frequency of the pulse generator. The logic analyzer will be tested using a double-edge clock. The test frequency is half the test clock rate because data is acquired on both the rising edge and the falling edge of the clock. Set the frequency to 400 MHz plus the frequency uncertainty of the pulse generator, plus a test margin of 1%.

   For example, if you are using an 8133A pulse generator, the frequency accuracy is ±1% of setting. Use a test margin of 1%. Set the frequency to 400 MHz plus 2% (408 MHz).

8. Verify the oscilloscope Deskew and adjust if necessary. See page 47.

Adjust the measured pulse width to 750 ps

In this procedure, you will use the oscilloscope's measurement markers to measure the actual pulse width in the test setup. Then you will adjust the pulse generator so that the measured pulse width is as specified.

9. Observe the 54845A oscilloscope display. Change the Channel 2 pulse

ManualsPlus.com

width of the 8133A pulse generator so that the pulse width measured at 1 volt on the oscilloscope is equal to 750 ps minus the measurement uncertainty and display resolution of the oscilloscope, further reduced by 35 ps for test margin.

If you are using the 54845A/B oscilloscope, the measurement uncertainty is ±((0.007% * Δt) + (full scale/2x memory depth) + 30 ps) ≅ ±30 ps. Add 5 ps for display resolution. Add 35 ps test margin.

750 ps - 30 ps - 5 ps - 35 ps = 680 ps. Set the pulse width as measured on the 54845A/B oscilloscope to 680 ps.

In the oscilloscope horizontal setup, change the position to 450 ps. Change the horizontal scale to 100 ps/div. This will make it easier for you to set the pulse width accurately.

On the oscilloscope move the Ax and Bx markers to the crossing points of the pulse and the horizontal center line. Read the pulse width at the bottom of the oscilloscope display. It is displayed as “Δ=”.

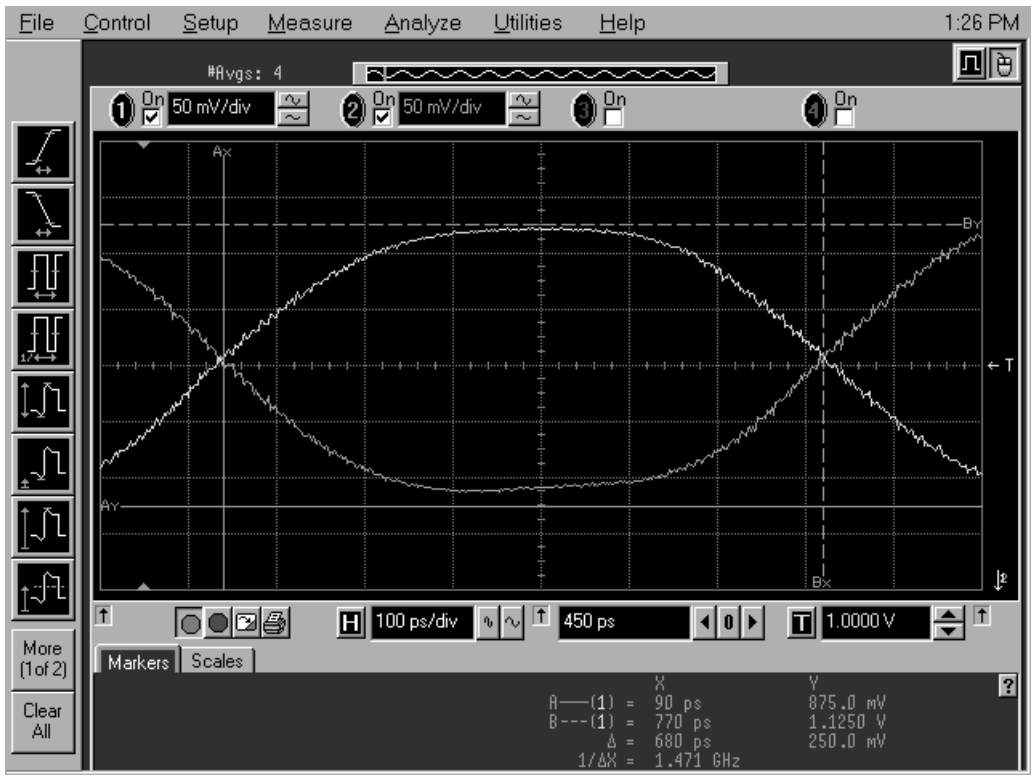

10 In the logic analyzer “Setup and Trigger...” window, select the Sampling tab. In the “State Mode Controls” section, select the “800 Mb/s / 64M State”

ManualsPlus.com

mode.

11 In the “Setup and Trigger...” window, Sampling tab, Clock Setup area, set the clock mode to “Rising Edge”.

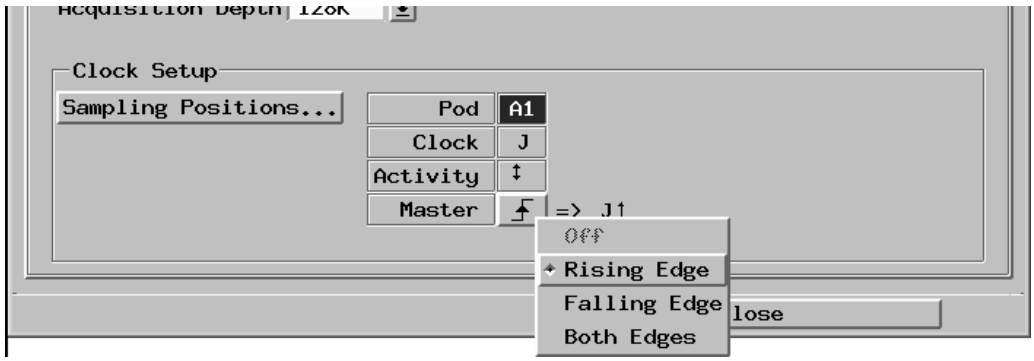

12 In the logic analyzer’s Setup and Trigger window, Format tab, unassign all pod 2 bits.

13 Assign bits 2, 6, 10, and 14 of Pod 1.

14 Ensure that the Pod 1 threshold is set to 1 volt. See page 53.

15 In the “Setup and Trigger...” window, Format tab, ensure that the J clock threshold is still set to Differential.

16 Re-establish the trigger function:

- **a** In the logic analyzer’s Setup and Trigger window, select the Trigger tab, and the Trigger Functions subtab.
- **b** Select “Find pattern” and select the “Replace” button.
- **c** Enter “A” in the “Label 1 = “ field.

Determine and set Eye Finder Position (800 Mb/s mode)

17 In the Eye Finder (Sampling Positions) window, expand “Label1 (4 channels)”.

18 Grab the blue bar for “Label1 (4 Channels)” and move it to approximately -2.1 ns. All blue bars will follow.

19 Run Eye Finder and note the average sampling position chosen by Eye Finder:_____ns. In the following example, the average sampling position is -2.09 ns. Note that in this step, you place the blue bars in the first narrow window (not the wide window) that appears to the left of zero in the Eye Finder display. Then run Eye Finder. The position may be

ManualsPlus.com

different based on your test setup. Bring stray channels into alignment if necessary. See page 56.

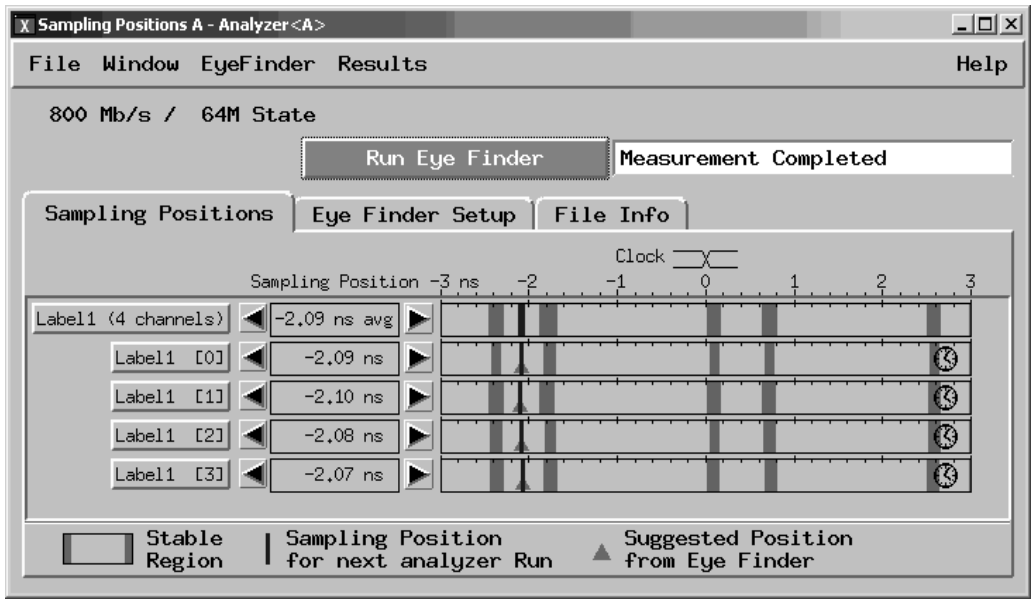

20 In the “Setup and Trigger...” window, Clock Setup area, set the clock mode to “Both Edges.”

21 In the Eye Finder window, align the blue bars vertically. See page 55.

22 Grab the blue bar for “Label1 (4 Channels)” and move it to the recommended starting position you noted in the prior step.

23 Run Eye Finder again. Some eyes may close, but the eyes in the sampling

ManualsPlus.com

position you chose on page 74 should remain open.

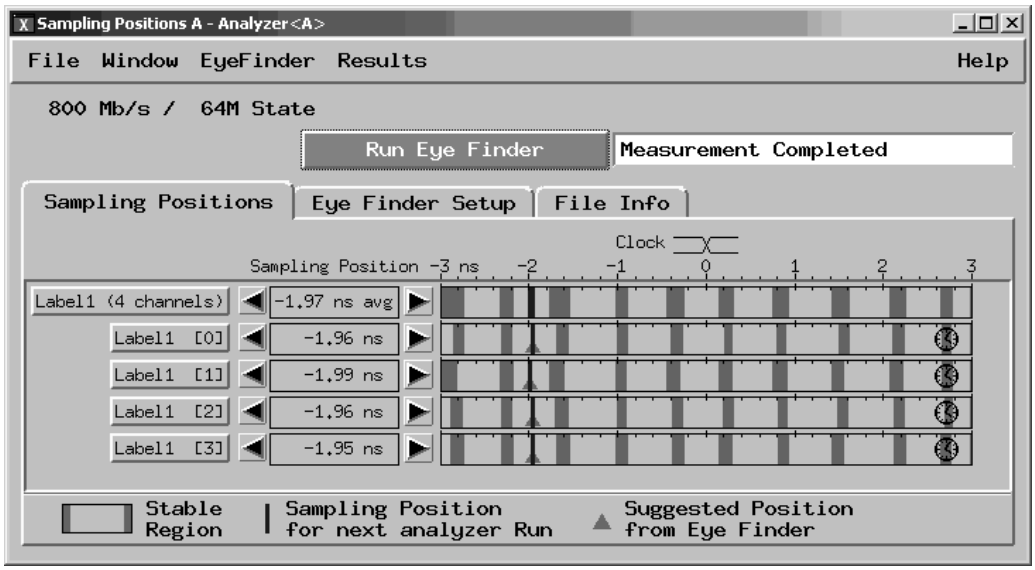

24 Perform the procedure “Determine PASS/FAIL (1 of 2 tests)” on page 58.

25 Select the Run Repetitive icon in the Listing window.

26 Perform the procedure “Determine PASS/FAIL (2 of 2 tests)” on page 60.

Test the complement of the bits (Pod 1, 800 Mb/s mode)

Now test the logic analyzer using complement data.

1 On the 8133A pulse generator, in the PULSE setup for CHANNEL 2, select COMP.

2 Note that the signal on the oscilloscope has moved. Change the oscilloscope’s horizontal position to -300 ps (or as required) to center the measured pulse on the oscilloscope display.

3 Verify the DC offset and adjust it if necessary. See page 46.

4 Deskew the oscilloscope. See page 47.

5 Adjust the measured pulse width to 750 ps (minus the test margin). See page 72.

6 Run Eye Finder.

7 Perform the procedure “Determine PASS/FAIL (1 of 2 tests)” on page 58.

ManualsPlus.com

8 Select the Run Repetitive icon in the Listing window.

9 Perform the procedure “Determine PASS/FAIL (2 of 2 tests)” on page 60

ManualsPlus.com

Test Pod 2 in 800 Mb/s mode

1. Leave the first E5382A Flying Lead Probe Set connected to Pod 1 of the logic analyzer. Remove the Pod 1 flying leads 2, 6, 10, and 14 from the SMA/Flying Lead test connectors. Do not remove the flying leads that are connected to CLK and $\overline{\text{CLK}}$ flying leads.
2. Connect the Pod 2 E5382A Flying Lead Probe Set's bits 6 and 14 to the SMA/Flying Lead test connector's pin strip connector at the 8133A pulse generator's Channel 2 OUTPUT.
3. Connect the Pod 2 E5382A Flying Lead Probe Set's bits 2 and 10 to the SMA/Flying Lead test connector's pin strip connector at the 8133A pulse generator's Channel 2 $\overline{\text{OUTPUT}}$.
4. On the 8133A pulse generator, in the PULSE setup for CHANNEL 2, press the COMP button to return the outputs to normal.
5. Note that the signal on the oscilloscope has moved. Change the oscilloscope's horizontal position to 450 ps (or as required) to center the measured pulse on the oscilloscope display.
6. Verify the DC offset and adjust it if necessary. See page 46.
7. Deskew the oscilloscope if necessary. See page 47.
8. Adjust the measured pulse width from the pulse generator to 750 ps (minus the test margin) as described on page 72.
9. In the logic analyzer's Setup and Trigger window, Format tab, unassign all pod 1 bits.
10. Assign bits 2, 6, 10, and 14 of Pod 2.
11. Verify that the Pod 2 threshold is set to 1 volt (just as you did for Pod 1 on page 53).
12. In the "Setup and Trigger..." window, Format tab, use the scroll bar at the bottom of the window to scroll to the left. Verify that the J clock threshold is set to Differential.
13. Re-establish the trigger function:
    - **a** In the logic analyzer's Setup and Trigger window, select the Trigger tab, and the Trigger Functions subtab.
    - **b** Select "Find pattern n times" and select the "Replace" button.

ManualsPlus.com

c Enter “A” in the “Label 1 = “ field.

14 Adjust the sampling positions using Eye Finder. Be sure to expand “Label1 (4 channels)”. You can use the starting position you noted on page 74. Bring stray channels into alignment if necessary. See page 56.

15 Determine pass or fail (1 of 2 tests). See page 58.

16 Ensure that the Listing window is set up. See page 58.

17 Select the Run Repetitive icon in the Listing window.

18 Determine pass or fail (2 of 2 tests). See page 60.

Test the complement of the bits (Pod 2, 800 Mb/s mode)

1 Test the complement of the bits on Pod 2. You can use the procedure “Test the complement of the bits (Pod 1, 800 Mb/s mode)” on page 76 as a guideline.

ManualsPlus.com

Test Pod 1 in the 1250 Mb/s mode

1. Disconnect the Pod 2 E5382A Flying Lead Probe Set's bits 2, 6, 10, and 14 from the SMA/Flying Lead test connectors' pin strip connectors.

   The original E5382A Flying Lead Probe Set should still be connected to Pod 1. The J clock on Pod 1 will be used for all tests.

2. Connect the Pod 1 E5382A Flying Lead Probe Set's bits 6 and 14 to the SMA/Flying Lead test connector's pin strip connector at the 8133A pulse generator's Channel 2 OUTPUT.

3. Connect the Pod 1 E5382A Flying Lead Probe Set's bits 2 and 10 to the SMA/Flying Lead test connector's pin strip connector at the 8133A pulse generator's Channel 2 $\overline{\text{OUTPUT}}$.

4. On the 8133A pulse generator, in the PULSE setup for CHANNEL 2, press the COMP button to return the outputs to normal.

5. Note that the signal on the oscilloscope has moved. Change the oscilloscope's horizontal position to 450 ps (or as required) to center the measured pulse on the oscilloscope display.

NOTE: You can temporarily reduce the frequency on the pulse generator and increase the horizontal scale on the oscilloscope to verify that you are measuring the correct pulse. Then return the settings to normal.

6. Verify the DC offset and adjust it if necessary. See page 46.

7. Set the frequency of the pulse generator. The logic analyzer will be tested using a double-edge clock. The test frequency is half the test clock rate because data is acquired on both the rising edge and the falling edge of the clock. Set the frequency to 625 MHz plus the frequency uncertainty of the pulse generator, plus a test margin of 1%.

   For example, if you are using an 8133A pulse generator, the frequency accuracy is ±1% of setting. Use a test margin of 1%. Set the frequency to 625 MHz plus 2% (638 MHz).

8. Verify the oscilloscope Deskew and adjust if necessary. See page 47.

9. Adjust the measured pulse width from the pulse generator to 750 ps (minus the test margin) as described on page 72.

10. In the logic analyzer "Setup and Trigger..." window, select the Sampling

ManualsPlus.com

tab. In the “State Mode Controls” section, select the “1250 Mb/s / 128M Half Chan” mode. The clock mode will change to “Both Edges”.

11 In the logic analyzer’s Setup and Trigger window, Format tab, unassign all pod 2 bits. The channel assignment dialog looks different in half-channel mode because only half of the channels can be assigned now.

12 Assign bits 2, 6, 10, and 14 of Pod 1.

13 Verify that the Pod 1 threshold is set to 1 volt. See page 53.

14 In the “Setup and Trigger...” window, Format tab, verify that the J clock threshold is still set to Differential.

15 Re-establish the trigger function:

- **a** In the logic analyzer’s Setup and Trigger window, select the Trigger tab, and the Trigger Functions subtab.
- **b** Select “Find pattern n times” and select the “Replace” button.
- **c** Enter “A” in the “Label 1 = “ field.

Determine and set Eye Finder Position (1250 Mb/s mode)

In the 1250 Mb/s mode, only double-edge clocking (“Both Edges”) is available. Therefore, we will use a different method for ensuring that we are measuring the correct eye.

16 Set the pulse generator frequency to half of the required value. If it was set to 638 MHz, then temporarily set it to 319 MHz.

17 In the Eye Finder (Sampling Positions) window, expand “Label1 (4 channels)”.

18 Grab the blue bar for “Label1 (4 Channels)” and move it to approximately -0.94 ns. All blue bars will follow.

19 Run Eye Finder and note the average sampling position chosen by Eye Finder:_____ns. In the following example, the average sampling position is -0.94 ns. Note that in this step, you place the blue bars in the first narrow window (not the wide window) that appears to the left of zero in the Eye Finder display. Then run Eye Finder. The position may be different based on your test setup. Bring stray channels into alignment if

ManualsPlus.com

necessary. See page 56.

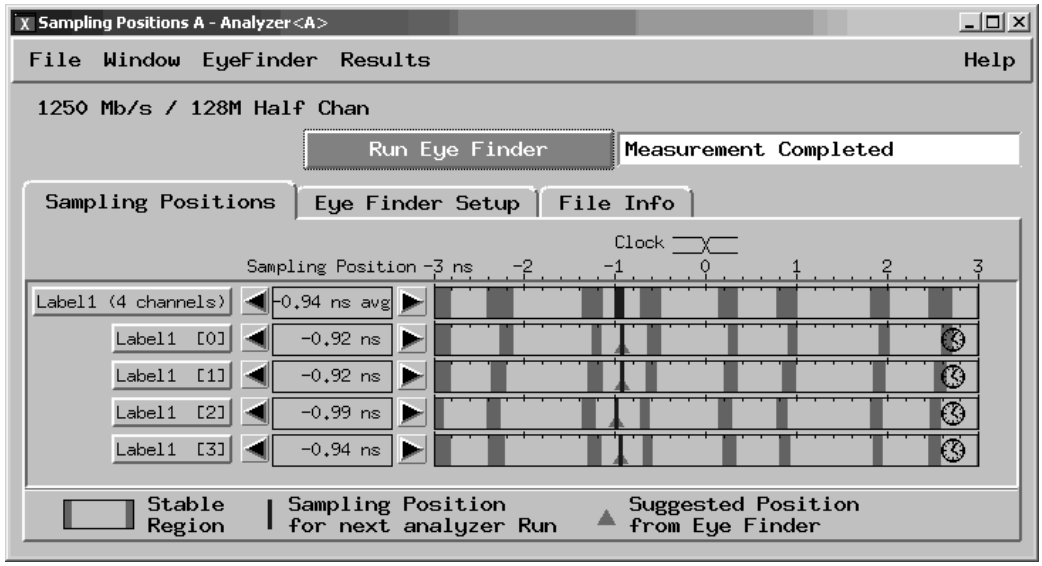

20 Re-set the pulse generator frequency to 625 MHz plus the test margin (638 MHz).

21 In the Eye Finder window, align the blue bars vertically. See page 55.

22 Grab the blue bar for “Label1 (4 Channels)” and move it to the recommended starting position you noted in the prior step.

23 Run Eye Finder again. Some eyes may close, but the eyes in the sampling position you chose on page 81 should remain open. Realign stray blue bars if necessary. See page 56.

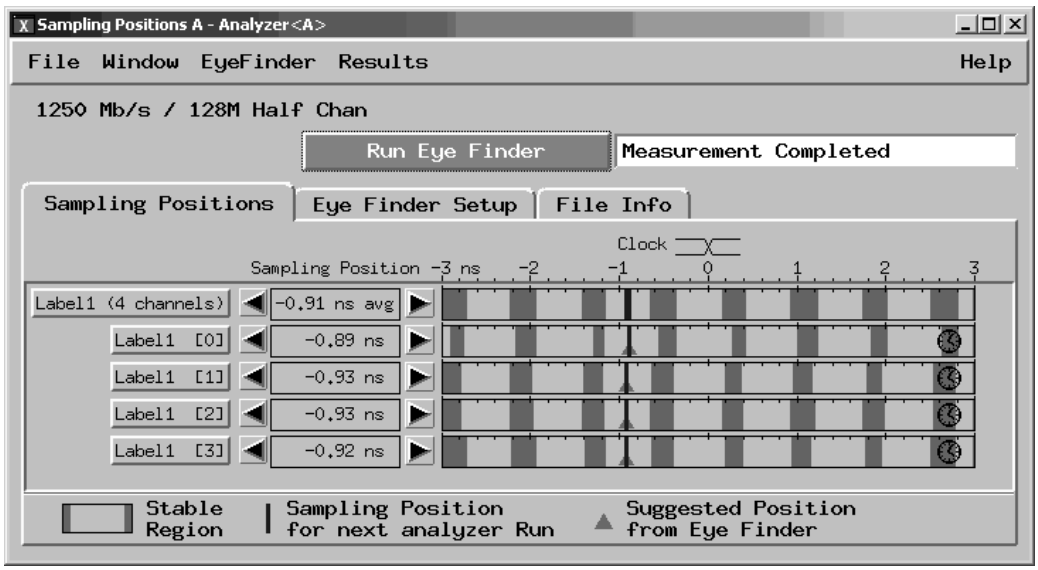

ManualsPlus.com

24 Perform the procedure “Determine PASS/FAIL (1 of 2 tests)” on page 58.

25 Select the Run Repetitive icon in the Listing window.

26 Perform the procedure “Determine PASS/FAIL (2 of 2 tests)” on page 60.

Test the complement of the bits (Pod 1, 1250 Mb/s mode)

Now test the logic analyzer using complement data.

1 On the 8133A pulse generator, in the PULSE setup for CHANNEL 2, select COMP.

2 Note that the signal on the oscilloscope has moved. Change the oscilloscope’s horizontal position to -300 ps (or as required) to center the measured pulse on the oscilloscope display.

3 Verify the DC offset and adjust it if necessary. See page 46.

4 Deskew the oscilloscope. See page 47.

5 Adjust the measured pulse width from the pulse generator to 750 ps (minus the test margin) as described on page 72.

6 Run Eye Finder.

7 Perform the procedure “Determine PASS/FAIL (1 of 2 tests)” on page 58.

8 Select the Run Repetitive icon in the Listing window.

9 Perform the procedure “Determine PASS/FAIL (2 of 2 tests)” on page 60

ManualsPlus.com

Test Pod 2 in 1250 Mb/s mode

1. Leave the first E5382A Flying Lead Probe Set connected to Pod 1 of the logic analyzer. Remove the Pod 1 flying leads 2, 6, 10, and 14 from the SMA/Flying Lead test connectors. Do not remove the flying leads that are connected to CLK and $\overline{\text{CLK}}$ flying leads.
2. Connect the Pod 2 E5382A Flying Lead Probe Set's bits 6 and 14 to the SMA/Flying Lead test connector's pin strip connector at the 8133A pulse generator's Channel 2 OUTPUT.
3. Connect the Pod 2 E5382A Flying Lead Probe Set's bits 2 and 10 to the SMA/Flying Lead test connector's pin strip connector at the 8133A pulse generator's Channel 2 $\overline{\text{OUTPUT}}$.
4. On the 8133A pulse generator, in the PULSE setup for CHANNEL 2, press the COMP button to return the outputs to normal.
5. Note that the signal on the oscilloscope has moved. Change the oscilloscope's horizontal position to 450 ps (or as required) to center the measured pulse on the oscilloscope display.
6. Verify the DC offset and adjust it if necessary. See page 46.
7. Deskew the oscilloscope if necessary. See page 47.
8. Adjust the measured pulse width from the pulse generator to 750 ps (minus the test margin) as described on page 72.
9. In the logic analyzer's Setup and Trigger window, Format tab, unassign all pod 1 bits.
10. Assign bits 2, 6, 10, and 14 of Pod 2.
11. Verify that the Pod 2 threshold is set to 1 volt (just as you did for Pod 1 on page 53).
12. In the "Setup and Trigger..." window, Format tab, use the scroll bar at the bottom of the window to scroll to the left. Verify that the J clock threshold is set to Differential.
13. Re-establish the trigger function:
    - **a** In the logic analyzer's Setup and Trigger window, select the Trigger tab, and the Trigger Functions subtab.
    - **b** Select "Find pattern n times" and select the "Replace" button.

ManualsPlus.com

c Enter “A” in the “Label 1 = “ field.

14 Adjust the sampling positions using Eye Finder. Be sure to expand “Label1 (4 channels)”. You can use the starting position you noted on page 81. Realign any stray channels if necessary. See page 56.

15 Determine pass or fail (1 of 2 tests). See page 58.

16 Ensure that the Listing window is set up. See page 58.

17 Select the Run Repetitive icon in the Listing window.

18 Determine pass or fail (2 of 2 tests). See page 60.

Test the complement of the bits (Pod 2, 1250 Mb/s mode)

1 Test the complement of the bits on Pod 2. You can use the procedure “Test the complement of the bits (Pod 1, 1250 Mb/s mode)” on page 83 as a guideline.

ManualsPlus.com

Test Pod 1 in the 1500 Mb/s mode

1. Disconnect the Pod 2 E5382A Flying Lead Probe Set's bits 2, 6, 10, and 14 from the SMA/Flying Lead test connectors' pin strip connectors.

   The original E5382A Flying Lead Probe Set should still be connected to Pod 1. The J clock on Pod 1 will be used for all tests.

2. Connect the Pod 1 E5382A Flying Lead Probe Set's bits 6 and 14 to the SMA/Flying Lead test connector's pin strip connector at the 8133A pulse generator's Channel 2 OUTPUT.

3. Connect the Pod 1 E5382A Flying Lead Probe Set's bits 2 and 10 to the SMA/Flying Lead test connector's pin strip connector at the 8133A pulse generator's Channel 2 $\overline{\text{OUTPUT}}$.

4. On the 8133A pulse generator, in the PULSE setup for CHANNEL 2, press the COMP button to return the outputs to normal.

5. Note that the signal on the oscilloscope has moved. Change the oscilloscope's horizontal position to 450 ps (or as required) to center the measured pulse on the oscilloscope display.

NOTE: You can temporarily reduce the frequency on the pulse generator and increase the horizontal scale on the oscilloscope to verify that you are measuring the correct pulse. Then return the settings to normal.

6. Verify the DC offset and adjust it if necessary. See page 46.

7. Set the frequency of the pulse generator. The logic analyzer will be tested using a double-edge clock. The test frequency is half the test clock rate because data is acquired on both the rising edge and the falling edge of the clock. Set the frequency to 750 MHz plus the frequency uncertainty of the pulse generator, plus a test margin of 1%.

   For example, if you are using an 8133A pulse generator, the frequency accuracy is ±1% of setting. Use a test margin of 1%. Set the frequency to 750 MHz plus 2% (765 MHz).

8. Verify the oscilloscope Deskew and adjust if necessary. See page 47.

ManualsPlus.com

Adjust the measured pulse width to 600 ps

In this procedure, you will use the oscilloscope's measurement markers to measure the actual pulse width in the test setup. Then you will adjust the pulse generator so that the measured pulse width is as specified.

9 Observe the 54845A oscilloscope display. Change the Channel 2 pulse width of the 8133A pulse generator so that the pulse width measured at 1 volt on the oscilloscope is equal to 600 ps minus the measurement uncertainty and display resolution of the oscilloscope, further reduced by 35 ps for test margin.

If you are using the 54845A/B oscilloscope, the measurement uncertainty is ±((0.007% * Δt) + (full scale/2x memory depth) + 30 ps) ≅ ±30 ps. Add 5 ps for display resolution. Add 35 ps test margin.

600 ps - 30 ps - 5 ps - 35 ps = 530 ps. Set the pulse width as measured on the 54845A/B oscilloscope to 530 ps.

In the oscilloscope horizontal setup, change the position to 300 ps (or as required) to center the pulse on the display.

On the oscilloscope move the Ax and Bx markers to the crossing points of the pulse and the horizontal center line. Read the pulse width at the

ManualsPlus.com

bottom of the oscilloscope display. It is displayed as “Δ=”.

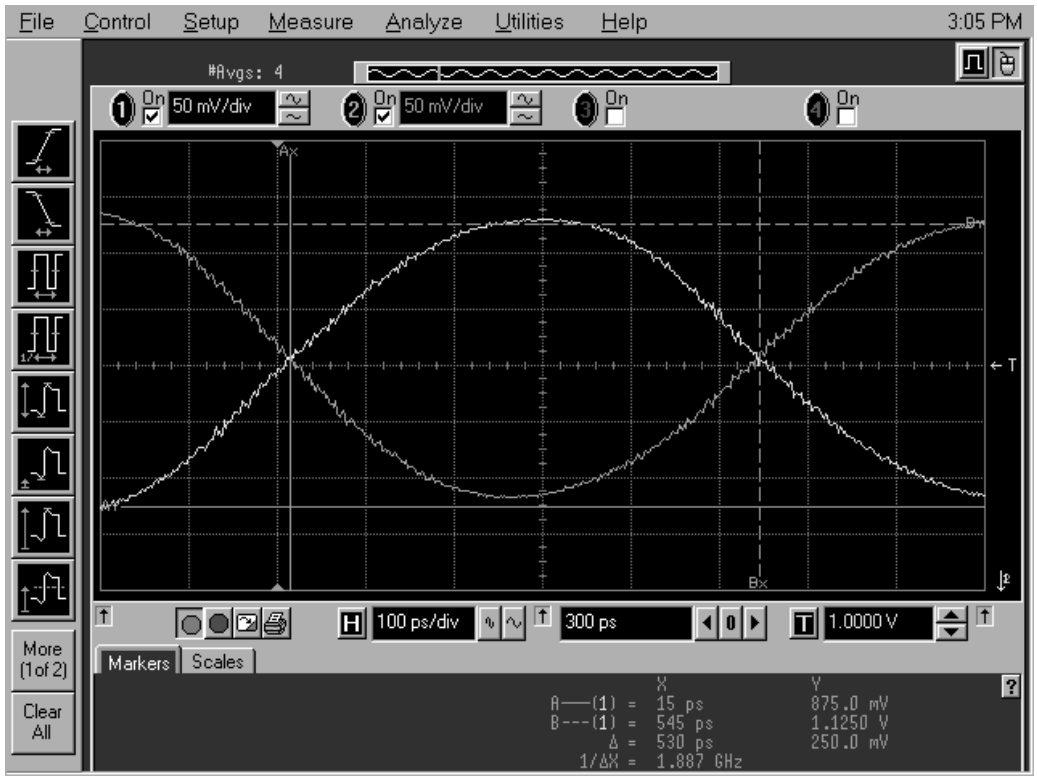

10 In the logic analyzer “Setup and Trigger...” window, select the Sampling tab. In the “State Mode Controls” section, select the “1500 Mb/s / 128M Half Chan” mode.

11 In the logic analyzer’s Setup and Trigger window, Format tab, unassign all pod 2 bits.

12 Assign bits 2, 6, 10, and 14 of Pod 1.

13 Ensure that the Pod 1 threshold is set to 1 volt. See page 53.

14 In the “Setup and Trigger...” window, Format tab, ensure that the J clock threshold is still set to Differential.

15 Re-establish the trigger function:

- **a** In the logic analyzer’s Setup and Trigger window, select the Trigger tab, and the Trigger Functions subtab.
- **b** Select “Find pattern n times” and select the “Replace” button.
- **c** Enter “A” in the “Label 1 = “ field.

ManualsPlus.com

Determine and set Eye Finder Position (1500 Mb/s mode)

16 Set the pulse generator frequency to half of the required value. If it was set to 765 MHz, then temporarily set it to 383 MHz.

17 In the Eye Finder (Sampling Positions) window, expand “Label1 (4 channels)”.

18 Grab the blue bar for “Label1 (4 Channels)” and move it to approximately 3.1 ns. All blue bars will follow.

19 Run Eye Finder and note the average sampling position chosen by Eye Finder:_____ns. In the following example, the average sampling position is 3.10 ns. Note that in this step, you place the blue bars in the last complete narrow window that appears on the right in the Eye Finder display. Then run Eye Finder. The position may be different based on your test setup. Bring stray channels into alignment if necessary. See page 56.

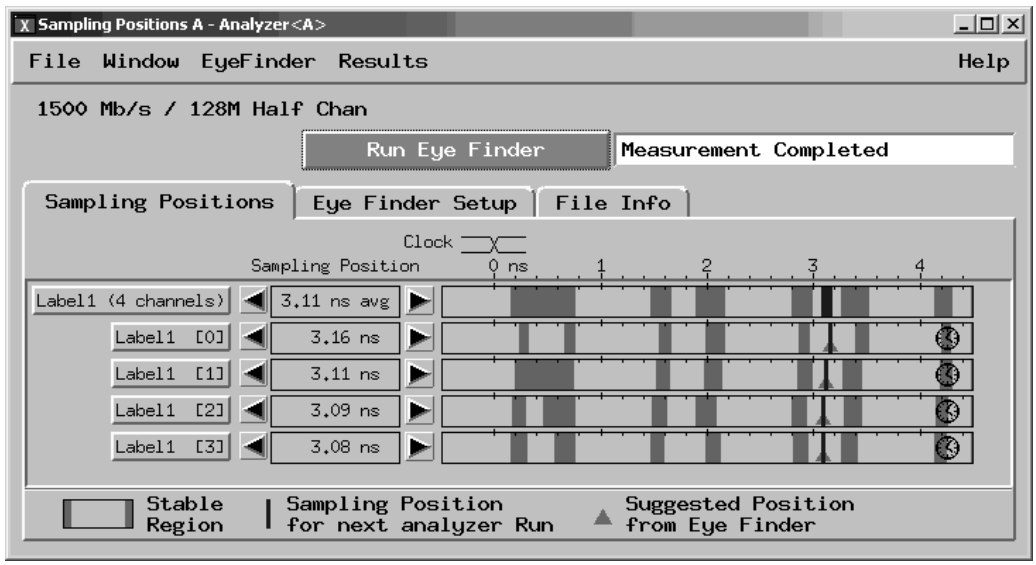

20 Re-set the pulse generator frequency to 750 MHz plus the test margin (765 MHz).

21 In the Eye Finder window, align the blue bars vertically. See page 55.

22 Grab the blue bar for “Label1 (4 Channels)” and move it to the recommended starting position you noted in the prior step.

23 Run Eye Finder again. Some eyes may close, but the eyes in the sampling position you chose on page 89 should remain open. Realign stray blue bars

ManualsPlus.com

if necessary. See page 56.

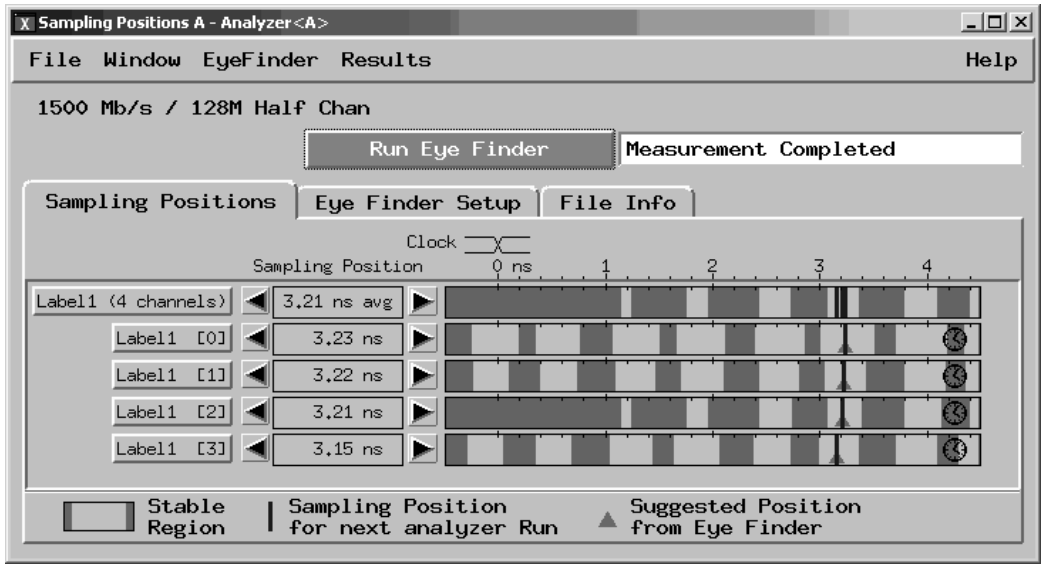

24 Perform the procedure “Determine PASS/FAIL (1 of 2 tests)” on page 58.

25 Select the Run Repetitive icon in the Listing window.

26 Perform the procedure “Determine PASS/FAIL (2 of 2 tests)” on page 60.

Test the complement of the bits (Pod 1, 1500 Mb/s mode)

Now test the logic analyzer using complement data.

1 On the 8133A pulse generator, in the PULSE setup for CHANNEL 2, select COMP.

2 Note that the signal on the oscilloscope has moved. Change the oscilloscope’s horizontal position to -350 ps (or as required) to center the measured pulse on the oscilloscope display.

3 Verify the DC offset and adjust it if necessary. See page 46.

4 Deskew the oscilloscope. See page 47.

5 Verify that the pulse width is set to 600 ps. See page 87.

6 Run Eye Finder.

7 Perform the procedure “Determine PASS/FAIL (1 of 2 tests)” on page 58.

8 Select the Run Repetitive icon in the Listing window.

ManualsPlus.com

9 Perform the procedure “Determine PASS/FAIL (2 of 2 tests)” on page 60

ManualsPlus.com

Test Pod 2 in 1500 Mb/s mode

1. Leave the first E5382A Flying Lead Probe Set connected to Pod 1 of the logic analyzer. Remove the Pod 1 flying leads 2, 6, 10, and 14 from the SMA/Flying Lead test connectors. Do not remove the flying leads that are connected to CLK and $\overline{\text{CLK}}$ flying leads.
2. Connect the Pod 2 E5382A Flying Lead Probe Set's bits 6 and 14 to the SMA/Flying Lead test connector's pin strip connector at the 8133A pulse generator's Channel 2 OUTPUT.
3. Connect the Pod 2 E5382A Flying Lead Probe Set's bits 2 and 10 to the SMA/Flying Lead test connector's pin strip connector at the 8133A pulse generator's Channel 2 $\overline{\text{OUTPUT}}$.
4. On the 8133A pulse generator, in the PULSE setup for CHANNEL 2, press the COMP button to return the outputs to normal.
5. Note that the signal on the oscilloscope has moved. Change the oscilloscope's horizontal position to 300 ps (or as required) to center the measured pulse on the oscilloscope display.
6. Verify the DC offset and adjust it if necessary. See page 46.
7. Deskew the oscilloscope if necessary. See page 47.
8. Adjust the measured pulse width from the pulse generator to 600 ps (minus the test margin) as described on page 87.
9. In the logic analyzer's Setup and Trigger window, Format tab, unassign all pod 1 bits.
10. Assign bits 2, 6, 10, and 14 of Pod 2.
11. Verify that the Pod 2 threshold is set to 1 volt (just as you did for Pod 1 on page 53).
12. In the "Setup and Trigger..." window, Format tab, use the scroll bar at the bottom of the window to scroll to the left. Ensure that the J clock threshold is set to Differential.
13. Re-establish the trigger function:
    - **a** In the logic analyzer's Setup and Trigger window, select the Trigger tab, and the Trigger Functions subtab.
    - **b** Select "Find pattern n times" and select the "Replace" button.

ManualsPlus.com

c Enter “A” in the “Label 1 = “ field.

14 Adjust the sampling positions using Eye Finder. Be sure to expand “Label1 (4 channels)”. You can use the starting position you noted on page 89. Realign any stray channels if necessary. See page 56.

15 Determine pass or fail (1 of 2 tests). See page 58.

16 Ensure that the Listing window is set up. See page 58.

17 Select the Run Repetitive icon in the Listing window.

18 Determine pass or fail (2 of 2 tests). See page 60.

Test the complement of the bits (Pod 2, 1500 Mb/s mode)

1 Test the complement of the bits on Pod 2. You can use the procedure “Test the complement of the bits (Pod 1, 1500 Mb/s mode)” on page 90 as a guideline.

ManualsPlus.com

To test the multi-card module

This section applies when cards were received as a multi-card module, and you have reconfigured them as single card modules for testing.

All single card modules must be reconfigured into their original multicard module configuration upon completion of the “16760A Minimum Data Eye Width and Minimum Clock Interval Performance Test Procedure”.

Turn off the mainframe and follow the procedures in “Preparing for Use,” beginning on page 15 to return the cards to their original configuration.

Then run the self-tests as described in “Do a self-test on the logic analysis system.” on page 40.

Finally, complete the “Performance Test Record” on page 95.

The Performance Test Record is designed to be used with the equipment specified on page 39. If you are not using the recommended test equipment, you will need to create your own version of the Performance Test Record with parameters that are specific to your test equipment.

ManualsPlus.com

Performance Test Record

Performance Test Record

16760A Logic Analyzer	
Logic Analyzer Serial No.	Work Order No.
Date:	Recommended Test Interval - 2 Year/4000 hours Recommended next testing:

Test Equipment Used	
Pulse Generator Model No.	Oscilloscope Model No.
Pulse Generator Serial No.	Oscilloscope Serial No.
Pulse Generator Calibration Due Date:	Oscilloscope Calibration Due Date:

Measurement Uncertainty	
Clock Rate	**Pulse Width (Eye Width)**
Pulse Generator Frequency Accuracy: 8133A: 1% of setting Test Margin: 1%	Oscilloscope Horizontal Accuracy: 54845B: ±[((0.007%) (Δt) + (full scale/(2x memory depth)) + 30 ps] ≅ 30 ps 54845A/B Oscilloscope Display Resolution: ±5 ps Test Margin: 35 ps. Sum: 70 ps
Setting: 200 MHz + 2% = 204 MHz (102 MHz double edge) 400 MHz + 2% = 408 MHz (204 MHz double edge) 800 MHz + 2% = 816 MHz (408 MHz double edge) 1250 MHz + 2% = 1275 MHz (638 MHz double edge) 1500 MHz + 2% = 1530 MHz (765 MHz double edge)	Pulse Width setting: 1.5 ns - 70 ps = 1430 ps Pulse Width setting: 1.5 ns - 70 ps = 1430 ps Pulse Width setting: 750 ps - 70 ps = 680 ps Pulse Width setting: 750 ps - 70 ps = 680 ps Pulse Width setting: 600 ps - 70 ps = 530 ps

Tests		
Test	**Settings**	**Results**
Initial Self-Tests	n/a	Pass/Fail:
200 Mb/s mode	Minimum clock interval, min. eye width	Pass/Fail:
400 Mb/s mode	Minimum clock interval, min. eye width	Pass/Fail:
800 Mb/s mode	Minimum clock interval, min. eye width	Pass/Fail:
1250 Mb/s mode	Minimum clock interval, min. eye width	Pass/Fail:
1500 Mb/s mode	Minimum clock interval, min. eye width	Pass/Fail:
Multi-card module self test	n/a	Pass/Fail:

ManualsPlus.com

ManualsPlus.com

Calibrating

This chapter gives you instructions for calibrating the logic analyzer.

ManualsPlus.com

Calibration Strategy

The 16760A logic analyzer does not require an operational accuracy calibration. To test the module against the module specifications, refer to Chapter 3, “Testing Performance,” beginning on page 31.

ManualsPlus.com

Troubleshooting

This chapter helps you troubleshoot the module to find defective assemblies.

ManualsPlus.com

The troubleshooting consists of flowcharts, self-test instructions, a cable test, and a test for the auxiliary power supplied by the probe cable.

If you suspect a problem, start at the top of the first flowchart. During the troubleshooting instructions, the flowcharts will direct you to perform the self-tests or the cable test.

The service strategy for this instrument is the replacement of defective assemblies. This module can be returned to Agilent Technologies for all service work, including troubleshooting. Contact your nearest Agilent Technologies Sales Office for more details.

CAUTION: Electrostatic discharge can damage electronic components. Use grounded wrist-straps and mats when you perform any service to this instrument or to the cards in it.

To use the flowcharts

Flowcharts are the primary tool used to isolate defective assemblies. The flowcharts refer to other tests to help isolate the trouble. The circled numbers on the charts indicate connections with the other flowcharts. Start your troubleshooting at the top of the first flowchart.

Mainframe Operating System

Before starting the troubleshooting on an 16760A, ensure that the required version of Agilent Technologies 16700 -series mainframe operating system is installed on the mainframe. The required operating system software versions are listed in “Mainframe and Operating System” on page 10. To check the operating system version number, open the System Administration window, click the Admin tab, then click About...

If the proper version is not loaded, obtain a copy of the updated operating system software and install it in the logic analyzer.

ManualsPlus.com

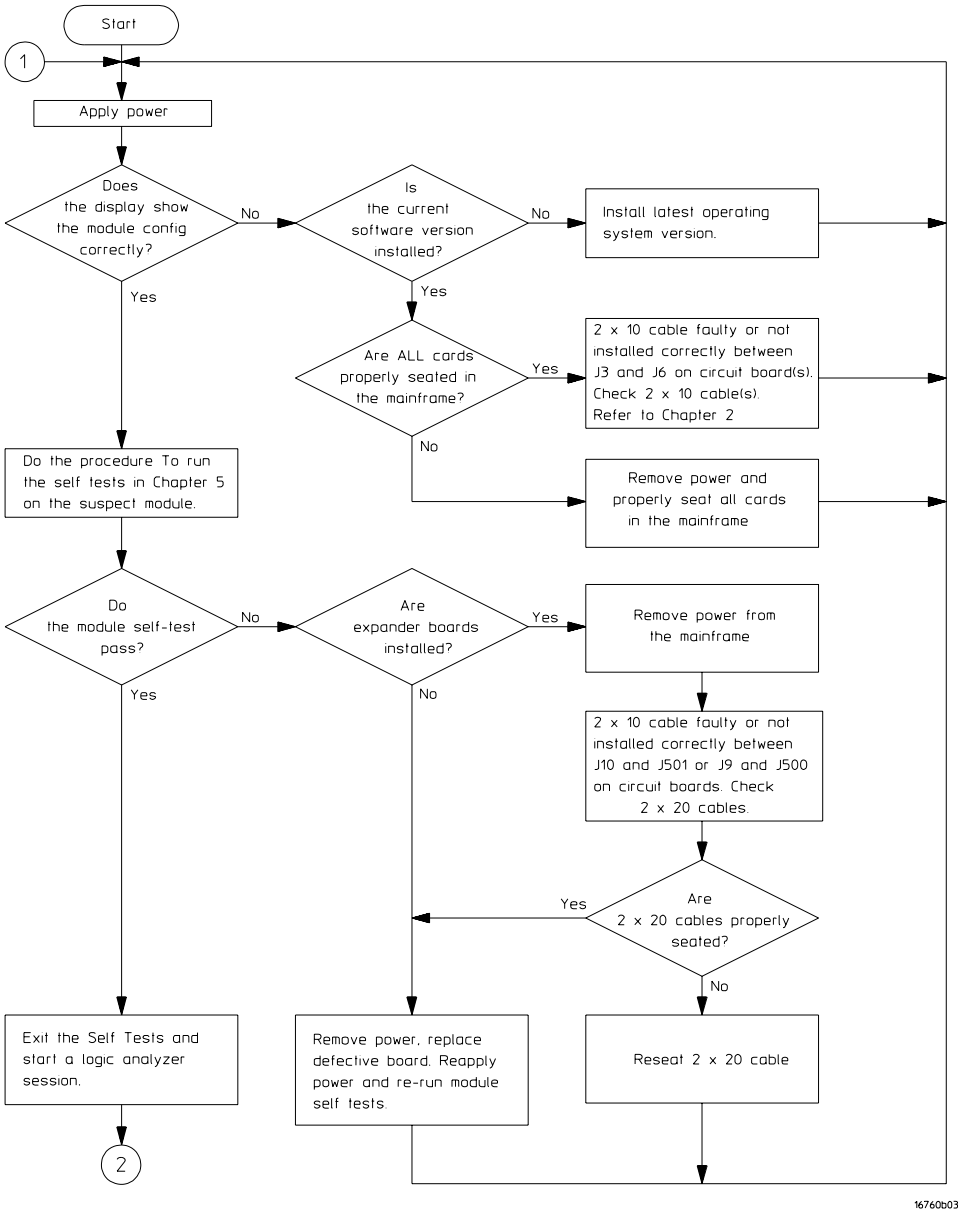

Troubleshooting Flowchart 1

ManualsPlus.com

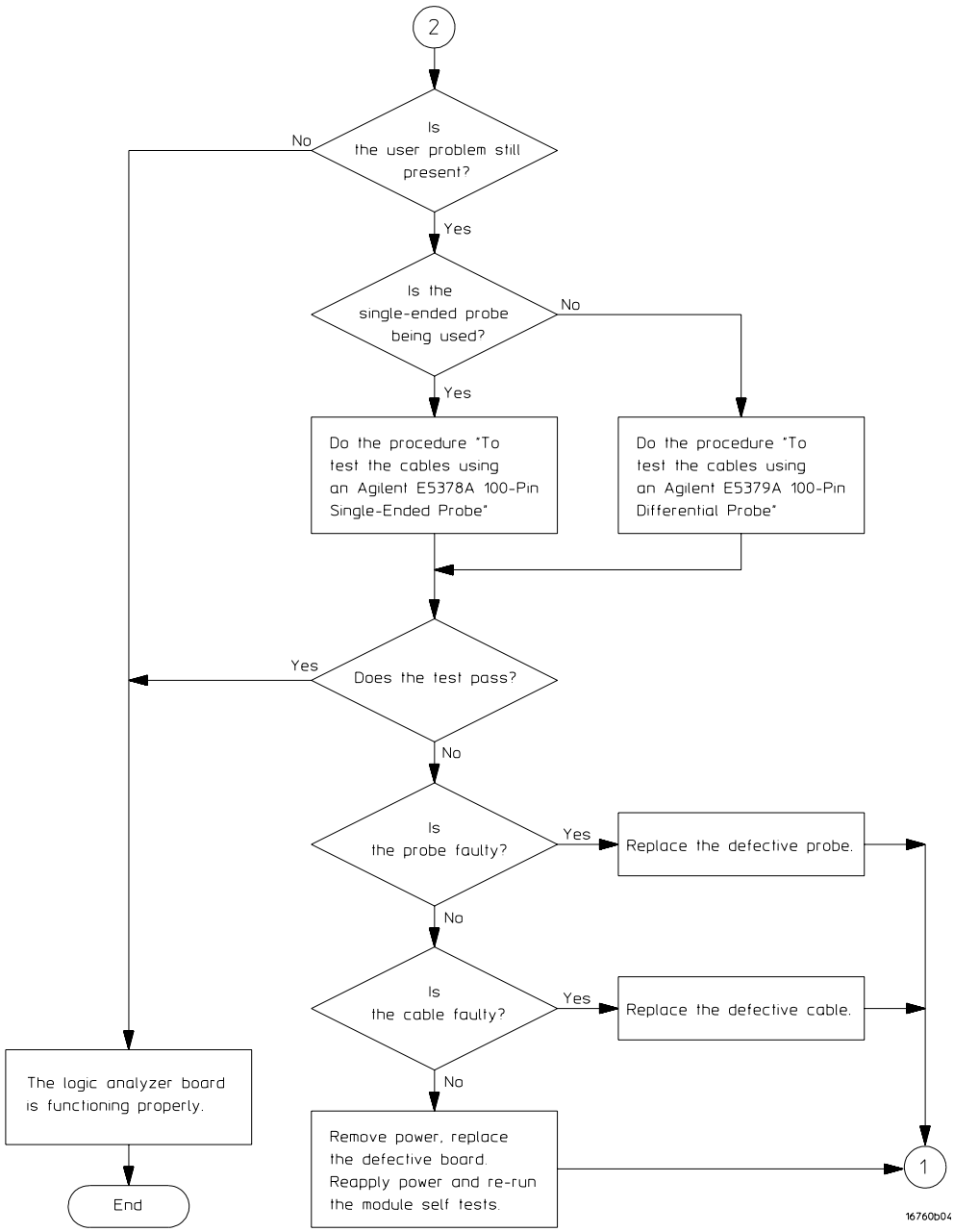

Troubleshooting Flowchart 2

ManualsPlus.com

To run the self-tests

Self-tests identify the correct operation of major, functional subsystems of the module. You can run all self-tests without accessing the module. If a self-test fails, the troubleshooting flowcharts instruct you to change a part of the module.

To run the self-tests:

1. In the System window, select the System Administration icon.
2. In the System Administration window, select the Admin tab, then select Self-Test. At the Test Query window, select Yes.

   The tests can be run individually, or all the tests can be run by selecting Test All at the bottom of the Self Test window. Note that if Test All is selected, system tests requiring user action will not be run. See the "Agilent Technologies 16700B/16702B Logic Analysis System and 16701B Expansion Frame Service Guide" for more information about the mainframe self-tests. Module self-tests are described on page 105.
3. In the Self Test window under the System tab, select System CPU Board.
4. Run the floppy drive test.
   - **a** In the Self Test: System CPU Board window, select Floppy Drive Test.
   - **b** Insert a DOS-formatted disk with 300KB of available space in the mainframe floppy drive.
   - **c** In the Test Query window, select OK.

     The Test Query window instructs you to insert the disk into the disk drive. The other System CPU Board tests require similar user action to successfully run the test.
5. In the Self Test: System CPU Board window, select Close to close the window.
6. In the Self Test window, select PCI Board. Select Test All to run all PCI board tests.
7. In the Self Test window, select the Master Frame tab. Select the 16760A module to be tested, then select Test All to run all the module tests. The module test status should indicate PASSED (see screen on next page).

ManualsPlus.com

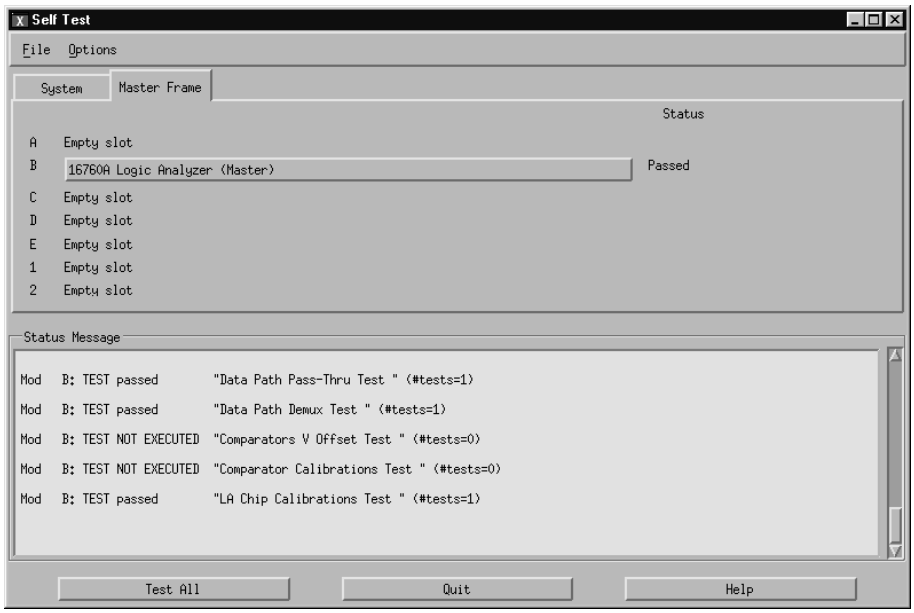

Self-Test Descriptions

The self-tests for the logic analyzer identify the correct operation of major functional areas in the module.

CPLD Register Test. The CPLD Register Test verifies that the 16700-series backplane can communicate with the 16760A module CPLD. The CPLD is used to configure the backplane and the memory devices. The test is done using both a walking “1” and walking “0” pattern. After the pattern has been stepped, internal device registers are read.

Passing the CPLD Registers Test implies that the module backplane device can be properly configured for module setup and data download.

Load FPGA Test. The Load FPGA Test verifies that the backplane interface device and the data memory control device can be configured. Configuration data is read from a file. During the configuration process, status signals are checked to verify the 16760A module hardware is operating properly during the configuration upload.

Passing the Load FPGA Test implies that the module can be properly configured for normal operation.

FPGA Register Test. The FPGA Register Test verifies that the read/write

ManualsPlus.com

registers of the backplane interface device and the memory control device can be written to then read. Both a walking “1” and “0” pattern is written to the device registers. The registers are then read and compared with known values.

Passing the FPGA Registers Test implies that the module hardware configuration can be properly managed as part of normal module operation.

Memory Data Bus Test. The Memory Data Bus Test verifies the read/write access of the acquisition module from the system backplane. In addition, some of the operations of the acquisition memory and control are also tested. A walking “1” and “0” is written to the first memory location. The contents of the first memory location is then downloaded and compared with known values.

Passing the Memory Data Bus Test implies that data stored in the acquisition memory can be uploaded from the 16760A module to the 16700-series system.

Memory Address Bus Test. The Memory Address Bus Test verifies the operation of the acquisition memory address bus. After initializing the acquisition memory, the address bus is exercised with a walking “1” and “0” pattern. At each resulting memory address, test data is stored. The test data is then downloaded and compared with known values.

Passing the Memory Address Bus Test implies that each signal line of the acquisition memory address bus is operational, and therefore all locations in the acquisition memory can be accessed.

HW Assisted Memory Cell Test. After verifying the acquisition memory address bus signal lines using the Memory Address Bus Test, the HW Assisted Memory Cell Test does a read/write test on every location in the acquisition memory. Each location in acquisition memory is filled with a test data pattern. After loading acquisition memory, the test data at each memory location is downloaded then compared with known values.

Passing the HW Assisted Memory Cell Test implies that each location in acquisition memory can be accessed, written, read, and can properly store data.

Memory Unload Modes Test. The Memory Unload Modes Test verifies the CPU interface can properly manage the acquisition memory unload in both full-channel, half-channel, and interleaved modes. Test data is written to acquisition memory. Different unload modes are selected, then the data is read and compared with known values.

Passing the Memory Unload Modes Test implies that the data can be reliably read from acquisition memory in full-channel, half-channel, or interleaved mode. This test along with the Memory Data Bus Test and Memory Address Bus Test provide complete testing of acquisition memory downloading through the CPU interface.

ManualsPlus.com

Memory DMA Unload Test. The Memory DMA Unload Test performs the same functions as the Memory Unload Test, except DMA backplane transfers are used to read the data from acquisition memory.

Memory Sleep Mode Test. The Memory Sleep Mode Test verifies the self refresh mode of acquisition memory devices. Memory self refresh mode is enabled when the memory control device is reprogrammed during normal operation.

Passing the Memory Sleep Mode Test verifies the acquisition memory will retain data during changes in 16760A operating modes during normal operation.

HW Accelerated Search Test. The HW Accelerated Search Test verifies the fundamental search capabilities of the module. Acquisition RAM is loaded with test data, and the search registers in the gate arrays are programmed with test patterns. Basic search functions including return and count pattern, are done and monitored for success.

Passing the HW Accelerated Search Test implies that the module's fundamental Hardware accelerated pattern search capabilities are operating and that pattern searches and pattern occurrence counts can be performed.

Chip Registers Read/Write Test. The Chip Registers Read/Write Test verifies that the registers of each acquisition IC are operating properly. Test patterns are written to each register on each acquisition IC, read, and compared with known values. The registers are reset, and verified that each register has been initialized. Test patterns are then written to ensure the chip address lines are not shorted or opened. Finally test data is written to registers of individual acquisition ICs to ensure each acquisition IC can be selected independently.

Passing the Chip Registers Read/Write Test implies that the acquisition IC registers can store acquisition control data to properly manage the operating of each IC.

Analyzer Chip Memory Bus Test. The Analyzer Chip Memory Bus Test verifies the operation of the acquisition memory buses between acquisition ICs. After initializing the memory a walking "1" and "0" pattern is created at the output of the acquisition ICs. This test data is stored in memory, read, and compared with known values.

Passing the Analyzer Chip Memory Bus Test implies that the acquisition memory buses between the acquisition ICs and acquisition memory is operating, and that acquisition data can propagate from the ICs to memory.

System Clocks (Master/Slave/Psync) Test. The System Clocks (Master/Slave/Psync) Test verifies the system clock are functional between all boards in a master/expander multi-card module. The module is configured for a simple measurement and test data is created. The test data is then downloaded and compared with known values.

ManualsPlus.com

Passing the System Clocks (Master/Slave/Psync) Test implies that the acquisition ICs of each expander board of a multi-card configuration can properly receive system clocks, and that all acquisition ICs in the multi-card module will properly capture data.

Analyzer Memory Bus SU/H Measure. The Analyzer Memory Bus SU/H Measure is an internal test that ensures the timing between the acquisition IC and acquisition memory is within acceptable parameters.

System Backplane Clock Test. The System Backplane Clock Test verifies the 100 MHz acquisition system clock. The test also ensures an on-board phase-locked loop can properly generate multiples of the acquisition system clock frequency. The 100 MHz acquisition system clock is first routed directly to the acquisition ICs. A timer is initialized, run, and stopped after 100ms. the counter is read, and compared with a known value. The acquisition system clock is then routed to the phase-locked loop to generate a frequency of 166.7 MHz. Again, the counter is initialized, run, and stopped after 100ms. The counter is read, and compared with a known value.

Passing the System Backplane Clock Test implies that the system acquisition clock is operating, and is within 5% of the desired acquisition frequency.

Inter-chip Resource Bus Test. The Inter-chip Resource Bus Test verifies the resource lines that run between each acquisition IC to ensure that the resource lines can be both driven as outputs and read as inputs. The resource registers are written with test patterns, read back, then compared with known values. The resource registers are then written with test patterns, read back from a different acquisition IC, and then compared with known values.

Inter-module Flag Bits Test. Flag bits are used for module-to-module communication within the 16700-series system. The Inter-module Flag Bits Test verifies that the flag bit lines can be driven and received by each acquisition IC in each module. Test patterns are written to the flag registers, read by the other acquisition ICs in the other modules, and then compared with known values.

Passing the Inter-module Flag Bits Test implies that the acquisition ICs can communicate using Flag Bits through the CPU interface and the 16700-series backplane, and that the operations utilizing the flag bits can be properly recognized by all modules in the system.

Global and Local Arm Lines Test. The Global and Local Arm Lines Test verifies that the local arm signal can be received by each acquisition IC on the master board. The test also verifies the global arm signal can be driven by each acquisition IC on a master board, and received by all acquisition ICs in the module on the master and on all expander boards. The arm lines are asserted and read at the acquisition ICs to ensure each acquisition IC recognizes the signal.

Passing the Global and Local Arm Lines Test implies any acquisition ICs on the

ManualsPlus.com

master board can arm the module, and that all acquisition ICs can recognize the arm signal.

EEPROM Test. The EEPROM Test verifies the operation of the module EEPROM, which stores the operational accuracy calibration factors. The existing contents of the EEPROM are uploaded into system memory. The EEPROM is overwritten with test patterns to verify that each cell in the EEPROM can independently store a 1 or 0. After the test has completed the original contents of the EEPROM are restored and its checksum verified.

Passing the EEPROM Test implies that the current operational accuracy calibration factors can be stored and then retrieved for use by the module to optimize its performance.

ADC Test. The ADC Test verifies the operation on the module analog-to-digital convertor (ADC) used in the module operational accuracy calibration, probe adapter identification, and on-board temperature monitoring. The ADC has built-in test voltage channels which monitors three test voltages. The output of the channels is then compared with known values.

Passing the ADC Test implies that the analog-to-digital convertor is operating properly and that the data paths around the ADC can properly pass data.

Probe ID Read Test. The Probe ID Read Test verifies that the analog-to-digital convertor (ADC) tested above and the on-board digital-to-analog convertor are operating to read the probe adapter ID. Probe adapter identification is done using a precision resistor. When the probe adapter is installed onto the probe cable, the precision resistor completes a voltage divider network. The Probe ID Read Test exercises the voltage divider network and then reads the voltage across the precision resistor and compares the voltage to know values.

Passing the Probe ID Read Test implies that any of the compatible probe adapters can be properly identified, causing the module to configure itself correctly.

Demux Data Arrays Programming Test. The Demux Data Arrays Programming Test verifies that the gate arrays' programming bits can be properly configured. Various test patterns are written to the programming port of the gate arrays, then read back and compared to expected values.

Passing the Demux Data Arrays Programming Test implied that the gate arrays can be programmed according to the operating mode of the module.

Comparators Programming Test. The Comparators Programming Test verifies that the comparators' programming bits can be properly configured. Various test patterns are written to the programming port of each comparator, then read back and compared to expected values.

Passing the Comparators Programming Test implies that the comparators can be programmed according to the operating mode of the module.

ManualsPlus.com

Data Path Pass-Thru Test. The Data Path Pass-Thru Test ensures that incoming data can flow correctly between the comparators and the acquisition ICs. The gate arrays are programmed for low-speed acquisition, which makes them invisible to data. The comparators are configured in test mode to drive a toggling signal on one of the comparator outputs while all other outputs are held quiet. The activity detectors in the acquisition ICs are monitored to verify that only the expected signal is toggling. The test is repeated for each comparator output.

Passing the Data Path Pass-Thru Test implies that incoming data can flow from the module front end to the acquisition ICs without errors for low speed acquisition modes (Timing, 200 MHz State, and 400 MHz State acquisition modes).

Data Path Demux Test. The Data Path Demux Test operates the same as the Data Path Pass-Thru Test, except the gate arrays are programmed for high-speed acquisition where the incoming data is demultiplexed to improve throughout.

Passing the Data Path Demux Test implies that incoming data can flow from the module front end to the acquisition ICs without errors for high speed acquisition modes (800 MHz State and 1250 Mb/s State acquisition modes).

Comparators V Offset Test. The Comparators V Offset Test completes the operation check of the comparators. Voltage offset is programmed into the comparators to ensure proper signal symmetry of the differential signal with respect to a threshold. The test verifies that the voltage offset can be programmed at all points throughout the offset range.

Passing the Comparators V Offset Test implies that the comparator voltage offset is programmable to ensure differential data signals are properly captured.

Comparators Calibration Test. The Comparators Calibration Test runs the comparator calibration to optimize the performance of the module. Both analog and digital domain tests are run to optimize signal integrity in the module front end.

Passing the Comparators Calibration Test implies that the comparators are completely operational and can be performance optimized. Note that the resulting calibration factors are not stored.

LA Chip Calibration Test. The LA Chip Calibration Test ensures that each acquisition IC in the module can perform an operational accuracy self-calibration every time Run is selected. The module is set in various configurations, after which the self-calibration routing is initiated. The results of the self-calibration is then checked to see if self-calibration was successful.

Passing the LA Chip Calibration Test implies that the module can reliably perform an operation accuracy self-calibration every time Run is selected. Consequently the incoming data is optimized to reduce channel-to-channel skew so the

ManualsPlus.com

acquisition ICs can reliably capture the incoming data.

To exit the test system

1. Select Close to close any module or system test windows.
2. In the Self Test window, select Quit.
3. In the session manager window, select Start Session to launch a new logic analyzer session.

ManualsPlus.com

To test the cables using an Agilent E5378A Single-ended Probe

This test allows you to functionally verify the logic analyzer cable and an Agilent E5378A probe.

Equipment Required

Equipment	Critical Specification	Recommended Part
Stimulus Board	No Substitute	16760-60001

1 Connect the logic analyzer to the stimulus board.

a Connect an Agilent E5378A 100-pin single-ended probe to the logic analyzer module. Connect logic analyzer Pod 1 to the probe output marked “Odd.” Connect logic analyzer Pod 2 to the probe output marked “Even.”

b Connect the probe input to stimulus board connector Pod 1.

c Connect a power cord to the stimulus board power supply. Connect the stimulus board power supply output to the stimulus board power supply connector J82.

d Plug in the stimulus power supply into line power. The green LED DS1

ManualsPlus.com

should illuminate showing that the stimulus board is active

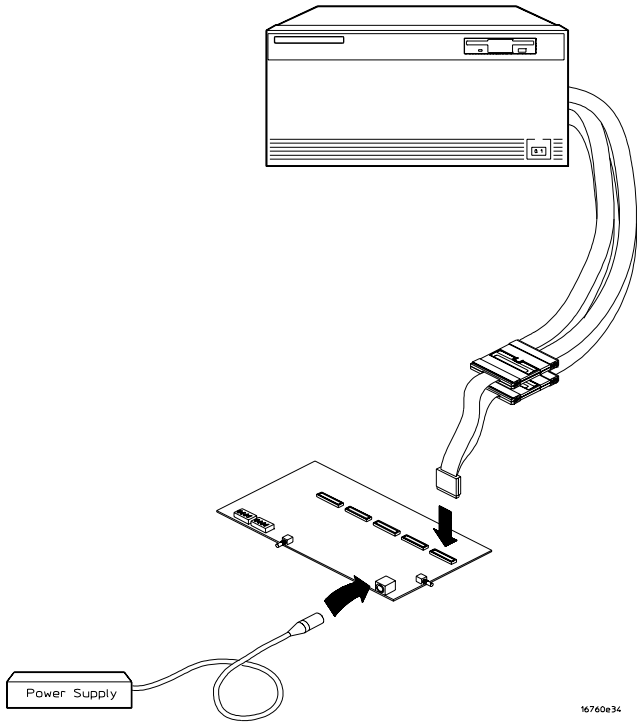

2 Set up the stimulus board.

a Configure the oscillator select switch S1 according to the following settings:

- S1 Off
- S2 Off
- S3 Off
- Int

b Configure the data mode switch S4 according to the following settings:

- Even
- Count

c Press the Resynch VCO button, then Counter RST (Counter Reset) button.

3 Set up the logic analyzer

a Open the Session Manager window and select “Start Session.”

b In the logic analyzer system window, select the module icon, then select

ManualsPlus.com

Setup and Trigger. A Setup and Trigger window appears.

c In the logic analysis system window, select the module icon, then select Listing. A Listing window appears.

4 Set up the Sampling tab

a In the logic analyzer Setup and Trigger window, select the Sampling tab.

b Under the Sampling tab, select State Mode.

c Select the clock edge field for J-clock, then select Rising Edge.

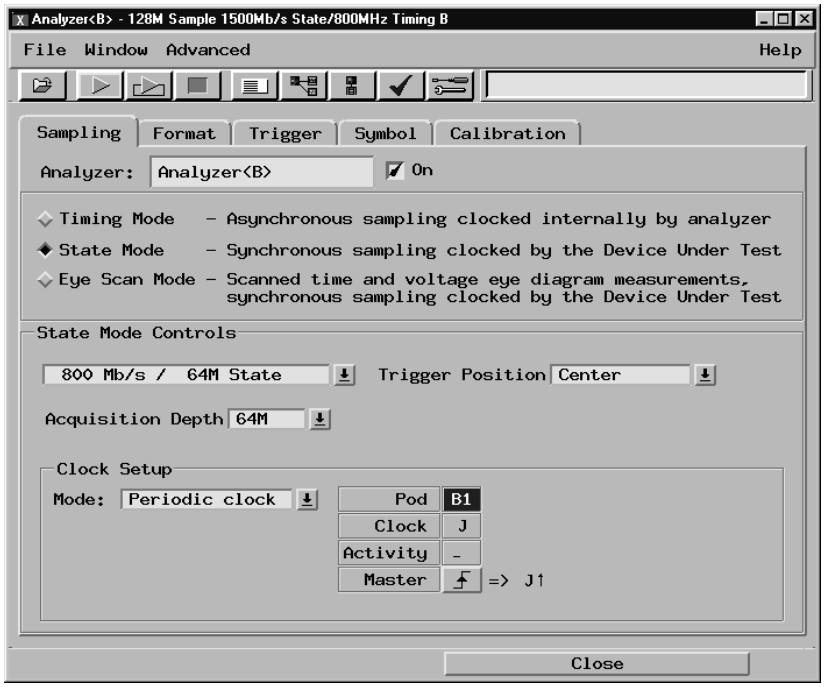

5 Configure the Trigger settings

a In the logic analyzer Setup and Trigger window, select the Trigger tab.

b Under the Trigger tab, select the Settings tab.

c Select the Acquisition Depth field, then select 8K.

d Select the Trigger Position field, then select Start.

ManualsPlus.com

e Select the Count field, then select Off.

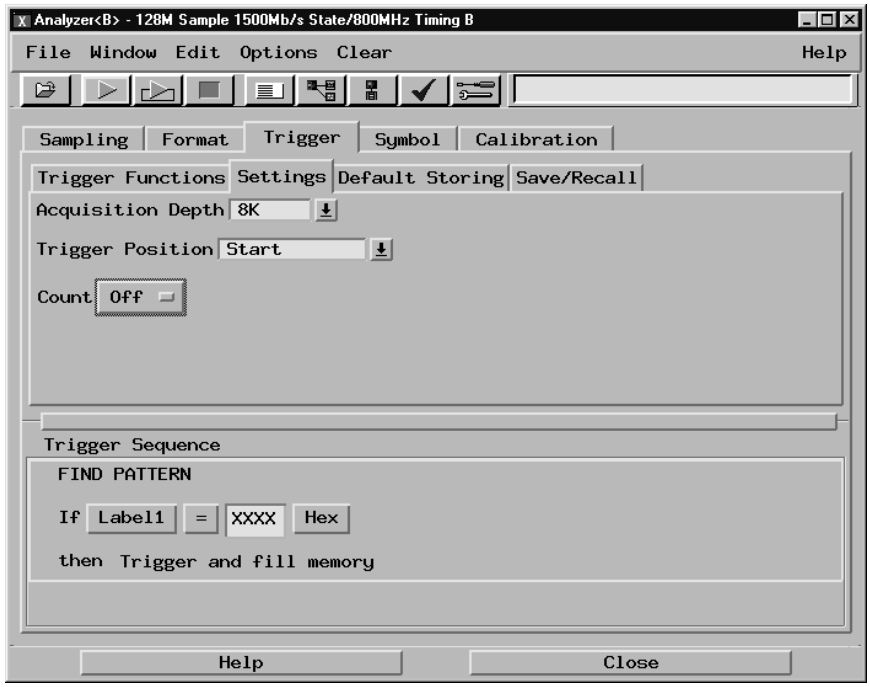

6 Configure the Format tab

a In the logic analyzer Setup and Trigger window, select the Format tab.

b Under the Format tab, select Pod Assignment.

c In the Pod Assignment window, use the mouse to drag the pods to the Analyzer 1 column.

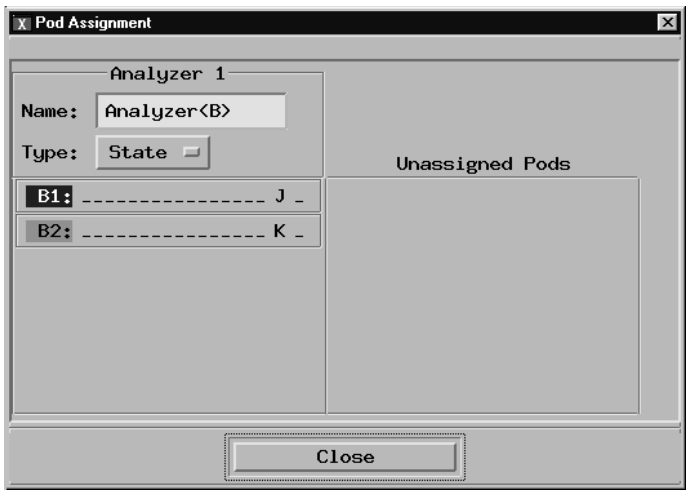

d Select Close to close the pod assignment window.

ManualsPlus.com

e Under the Format tab, select the field showing the channel assignments for one of the pods being tested, then select “**********” to active all channels.

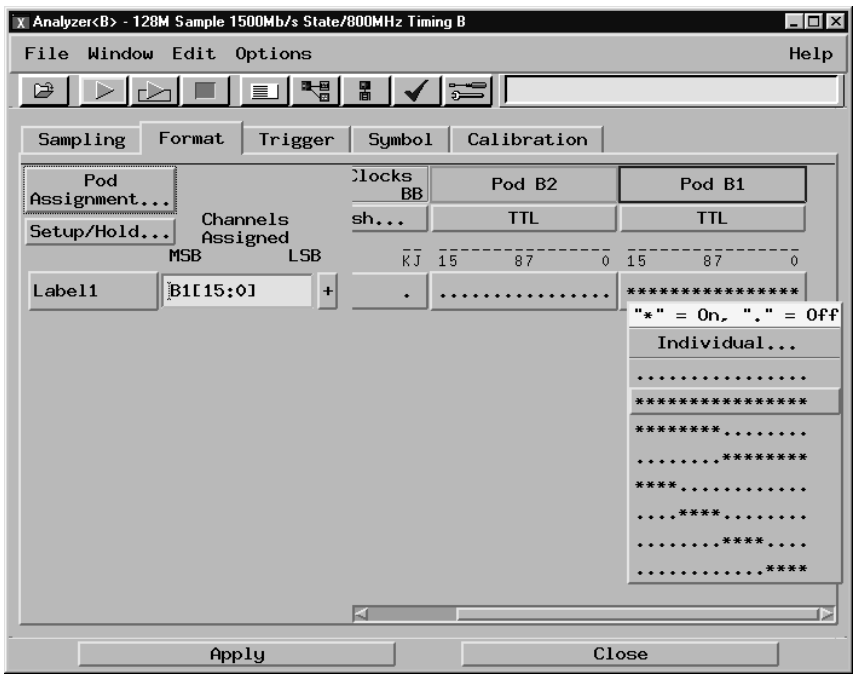

f Select OK to close the channel assignment window.

g Repeat e and f for the remaining pods to be tested.

7 Configure the logic analyzer thresholds

a In the logic analyzer Setup and Trigger window, select the Format tab.

b Under the Format tab, select the threshold field under either pod. The Pod threshold window will appear.

c In the Pod threshold window, ensure the Apply threshold setting to all pods is checked.

ManualsPlus.com

d In the Pod threshold window, select User Defined, then select the threshold voltage field. Enter 1.00V.

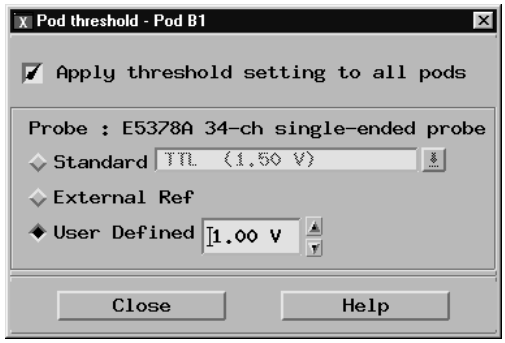

e Select Close to close the pod threshold window.

f Under the Format tab, select the Clk Thresh... field. The clock threshold window will appear.

g Select the threshold field associated with J-clock. The J threshold window will appear.

h In the J threshold window, select Differential.

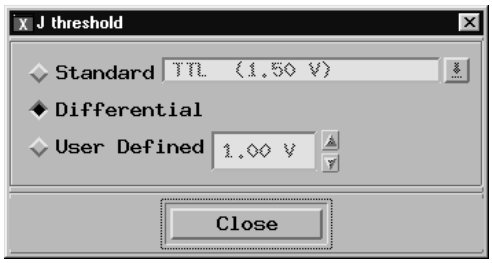

i Select Close to close the J threshold window, then select Close to close the Clock threshold window.

ManualsPlus.com

8 On the logic analyzer, select Run. The listing should look similar to the figure below.

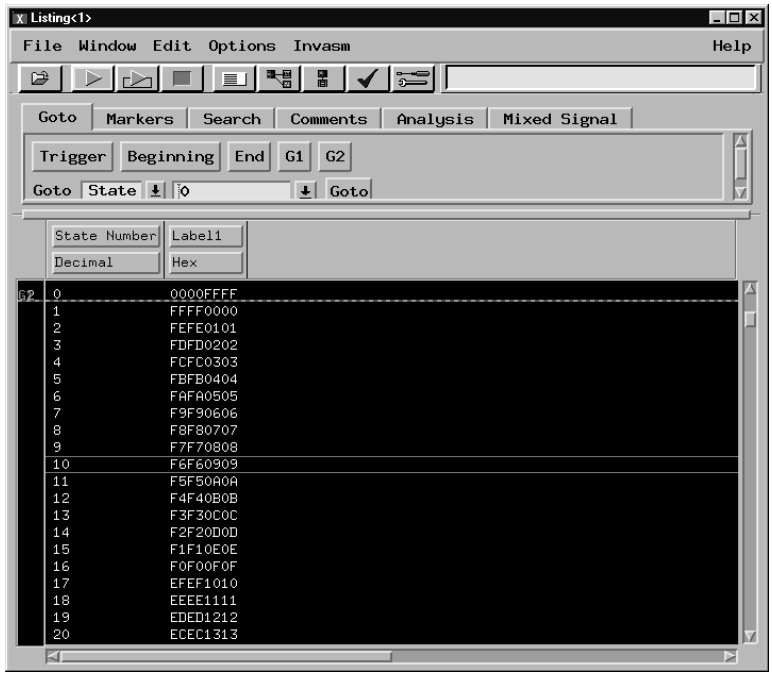

Scroll down at least 256 states to verify the data. The lower two bytes (four digits) of Label1 show two incrementing binary counters. The upper two bytes of Label1 show two decrementing binary counters. If the listing does not look similar the figure, then there is a possible problem with the cable or high density adapter. Causes for cable test failure include:

- open channel
- channel shorted to a neighboring channel
- channel shorted to either ground or a supply voltage

If the test data on either the lower two bytes or the upper two bytes is not correct, then perform the following step to isolate the failure.

9 Verify the failure

a Reconnect probe adapter to the logic analyzer module. Connect logic analyzer Pod 1 to the probe adapter output marked “Even.” Connect logic analyzer Pod 2 to the probe adapter output marked “Odd.”

ManualsPlus.com

b On the logic analyzer, select Run. Note the lower two bytes now displays two decrementing counters, the upper two bytes displays two incrementing counters.

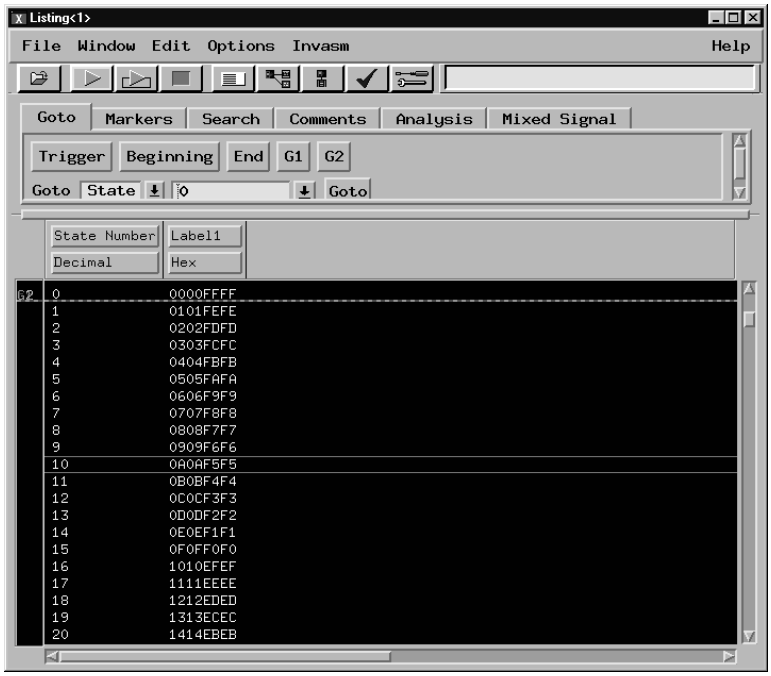

If the error in the test data remains the same two bytes as the previous run (that is, the error follows the cable) then the cable is suspect.

If the error is now in the opposite two bytes (that is, the error follows the E5378A probe adapter) the probe adapter is suspect.

Return to the troubleshooting flowchart.

ManualsPlus.com

To test the cables using an Agilent E5379A Differential Probe

This test allows you to functionally verify the logic analyzer cable and an Agilent E5379A probe.

Equipment Required

Equipment	Critical Specification	Recommended Part
Stimulus Board	No Substitute	16760-60001

1 Connect the logic analyzer to the stimulus board.

a Connect an Agilent E5379A 100-pin differential probe to the logic analyzer cable to be tested.

b Connect the probe input to the stimulus board connector Pod 1.

c Connect a power cord to the stimulus board power supply. Connect the stimulus board power supply output to the stimulus board power supply connector J82.

d Plug in the stimulus power supply into line power. The green LED DS1 should illuminate showing that the stimulus board is active.

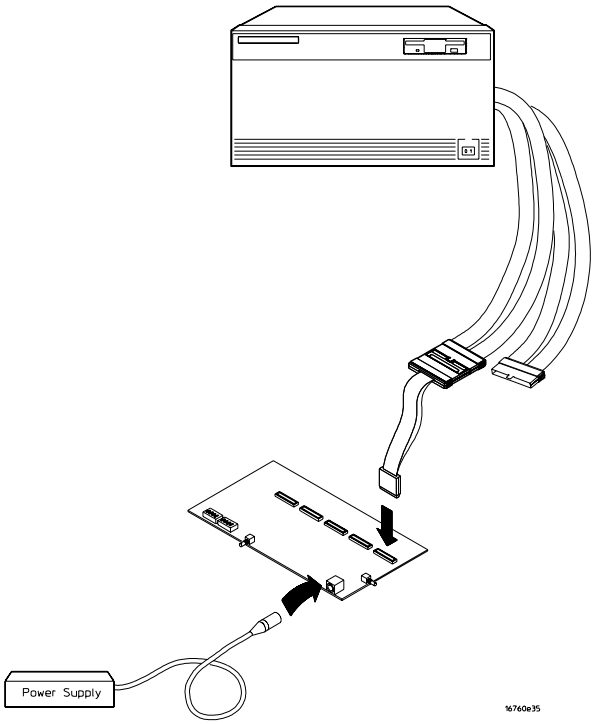

ManualsPlus.com

2 Set up the stimulus board

a Configure the oscillator select switch S1 according to the following settings:

- S1 Off
- S2 Off
- S3 Off
- Int

b Configure the data mode switch S4 according to the following settings:

- Even
- Count

c Press the Resynch VCO button, then the Counter RST (Counter Reset) button.

3 Set up the logic analyzer

a Open the Session Manager window and select “Start Session.”

b In the Logic Analysis System window, select the module icon, then select Setup and Trigger. A Setup and Trigger window appears.

c In the Logic Analysis System window, select the module icon, then select Listing. A Listing window appears.

4 Set up the Sampling tab

a In the logic analyzer Setup and Trigger window, select the Sampling tab.

b Under the Sampling tab, select State Mode.

ManualsPlus.com

c Select the clock edge field for J-clock, then select Rising Edge.

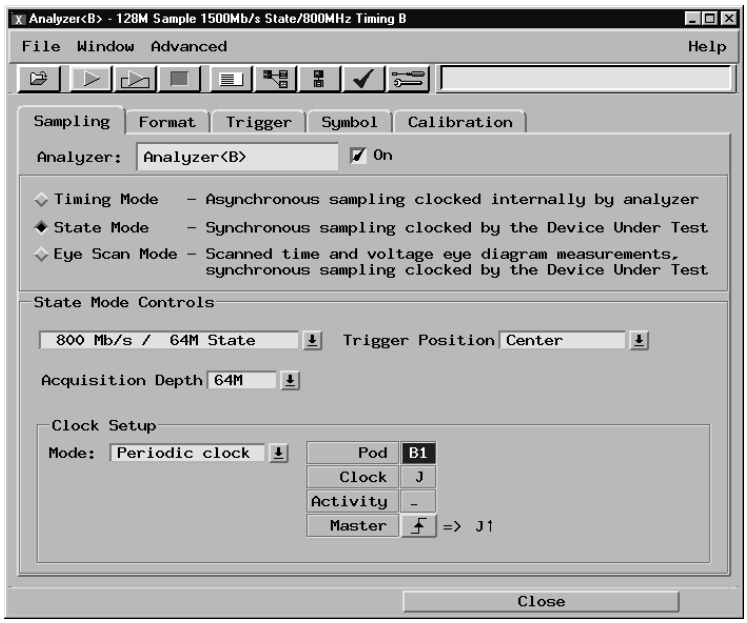

5 Configure the Trigger settings

a In the logic analyzer Setup and Trigger window, select the Trigger tab.

b Under the Trigger tab, select the Settings tab.

c Select the Acquisition Depth field, then select 8K.

d Select the Trigger Position field, then select Start.

e Select the Count field, then select Off.

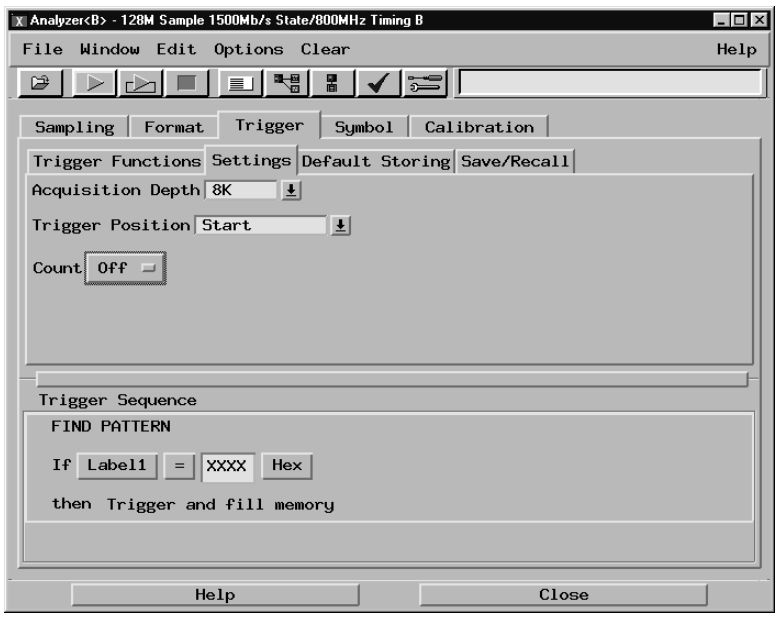

ManualsPlus.com

6 Configure the Format tab

a In the logic analyzer Setup and Trigger window, select the Format tab.

b Under the Format tab, select Pod Assignment.

c In the Pod Assignment window, use the mouse to drag the pod under test to the Analyzer 1 column.

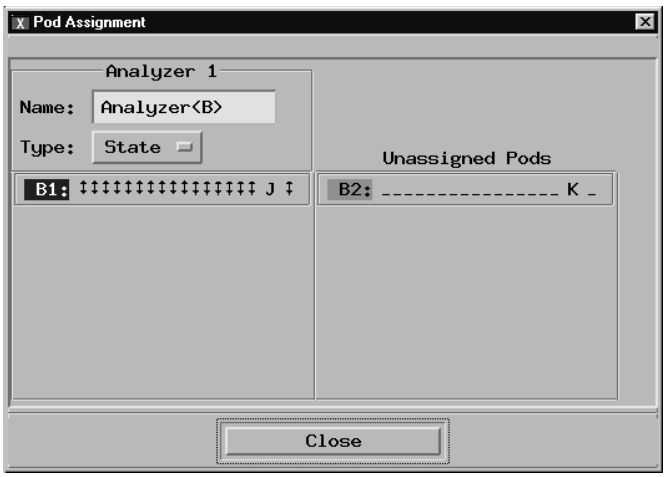

d Select Close to close the pod assignment window.

e Under the Format tab, select the field showing the channel assignment for the pod under test, then select "**********" to activate all channels.

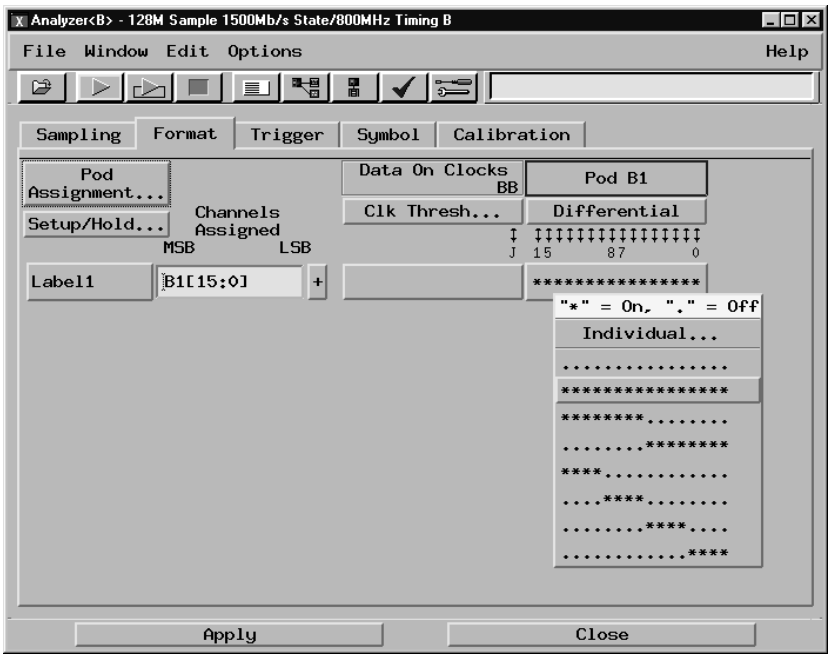

f Select OK to close the channel assignment window.

ManualsPlus.com

7 Configure the logic analyzer thresholds

a Under the Format tab, select the CLK Thresh... field. The Clock threshold window will appear.

b Select the threshold field associated with J-clock. The J threshold window will appear.

c In the J threshold window, select Differential.

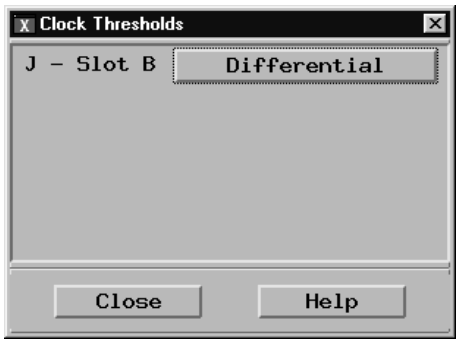

d Select Close to close the J threshold window, then select Close to close the Clock threshold window.

8 On the logic analyzer, select Run. The listing should look similar to the figure below.

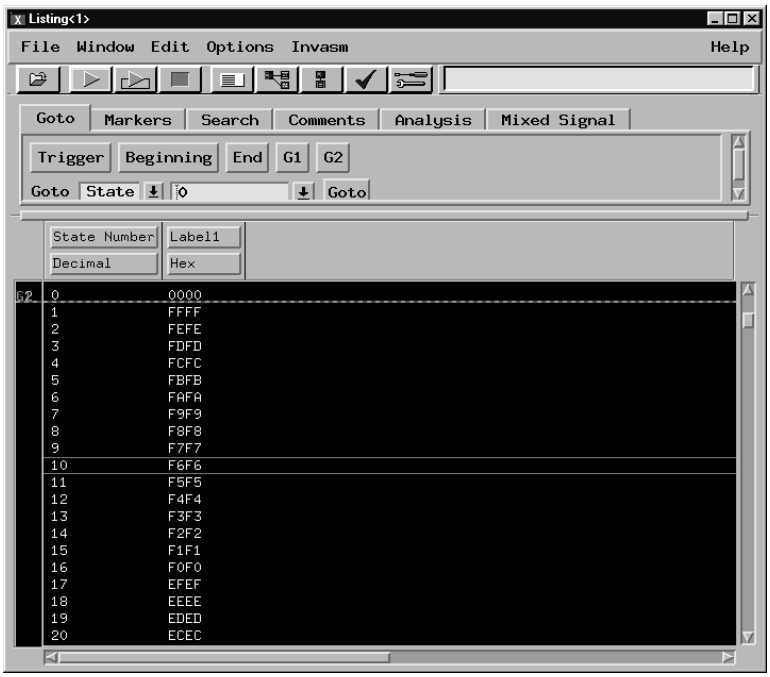

ManualsPlus.com

Scroll down at least 256 states to verify the data. Label1 shows two decrementing binary counters. If the listing does not look similar to the figure, then there is a possible problem with the cable or high density probe adapter. Cause for cable test failures include:

- open channel
- channel shorted to a neighboring channel
- channel shorted to either ground or a supply voltage

If the test data is not correct, then perform the following step to isolate the failure.

9 Verify the failure

a Reconnect probe adapter to the other logic analyzer cable.

b Repeat step 6 through 8 to reconfigure the Format tab in the Setup and Trigger window. Deactivate the pod just tested. Activate the pod to be tested and assign all channels to Label1.

c On the logic analyzer, select Run. The expected test data is the same as in step 8 above.

If the test data is now correct (that is, the error follows the cable) then the cable is suspect.

If the test data is still not correct (that is, the error follows the E5379A probe adapter) the probe adapter is suspect.

Return to the troubleshooting flowchart.

ManualsPlus.com

Replacing Assemblies

This chapter contains the instructions for removing and replacing the logic analyzer module, the circuit board of the module, and the probe cables of the module as well as the instructions for returning assemblies.

ManualsPlus.com

CAUTION: Turn off the instrument before installing, removing, or replacing a module in the instrument.

Tools Required

- A T10 TORX screwdriver, to remove screws connecting the probe cables and screws connecting the back panel.

To remove the module

CAUTION: Electrostatic discharge can damage electronic components. Use grounded wriststraps and mats when performing any service to this module.

1 Remove power from the instrument.

a Exit all logic analysis sessions. In the session manager, select Shutdown.

b At the query, select Power Down.

c When the “OK to power down” message appears, turn the instrument off.

d Disconnect the power cord.

2 Loosen the thumb screws.

Starting from the top, loosen the thumb screws on the filler panels and cards located above the module and the thumb screws of the module.

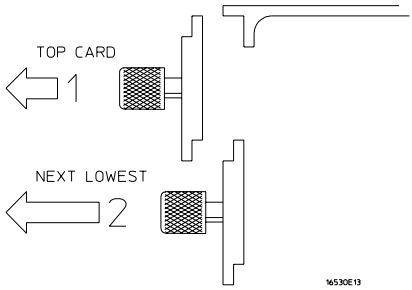

3 Starting from the top, pull the cards and filler panels located above the module half-way out.

4 If the module consists of a single card, pull the card completely out.

If the module consists of multiple cards, pull all cards completely out.

ManualsPlus.com

5 Push all other cards into the card cage, but not completely in.

This is to get them out of the way for removing and replacing the module.

6 If the module consist of a single card, replace the faulty card.

If the module consists of multiple cards, remove the cables from J9 and J10 of all cards. Remove the 2x10 cables from J4, J5, J7, and J8 from the master card. Remove the faulty card from the module.

ManualsPlus.com

To remove the logic analyzer cable

1 Remove power from the instrument

   a Exit all logic analysis session. In the session manager, select Shutdown.

   b At the query, select Power Down.

   c When the “OK to power down” message appears, turn the instrument off.

   d Disconnect the power cord.

2 Remove the logic analyzer cable clamp.

   a Remove two screws that secure the top logic analyzer cable clamp to the outside rear panel.

   b Remove two screws that secure the top cable clamp to the inside rear panel.

   c Slide the top cable clamp out of the rear panel.

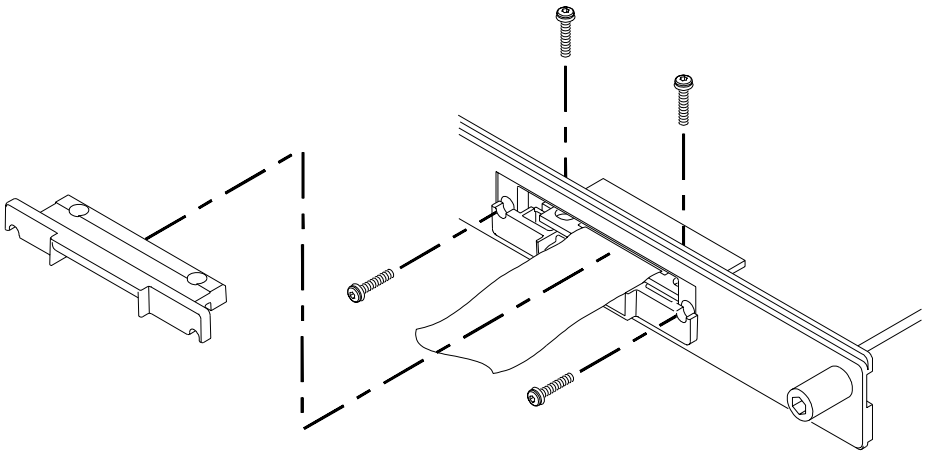

16760e18

3 Remove the logic analyzer cable.

   a Gently lift the logic analyzer cable end connector from the circuit board connector (J1 or J2).

   b Remove the logic analyzer cable end connector through the rear panel. The bottom cable clamp will also be removed with the logic analyzer cable.

4 If the logic analyzer cable is faulty, replace the cable and follow the next procedure to install the replacement logic analyzer cable.

ManualsPlus.com

To install the logic analyzer cable

1 Connect the logic analyzer cable to the logic analyzer circuit board.

a Insert the logic analyzer cable to the logic analyzer circuit board.

b Align the logic analyzer cable end connector with the circuit board cable connector (J1 or J2) and gently apply pressure to seat the logic analyzer cable onto the circuit board connector.

c Insert the top and bottom logic analyzer cable clamps into the rear panel.

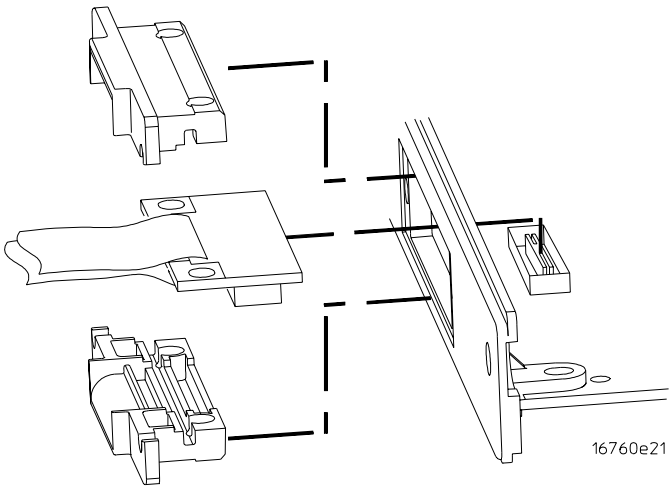

2 Secure the cable clamp to the rear panel.

a Install the two longer screws (H5) vertically through the top cable clamp into both the bottom cable clamp and the circuit board. Do not tighten the screws yet.

ManualsPlus.com

b Install the two shorter screws (H4) through the rear of both cable clamps into the rear panel. Do not tighten the screws yet.

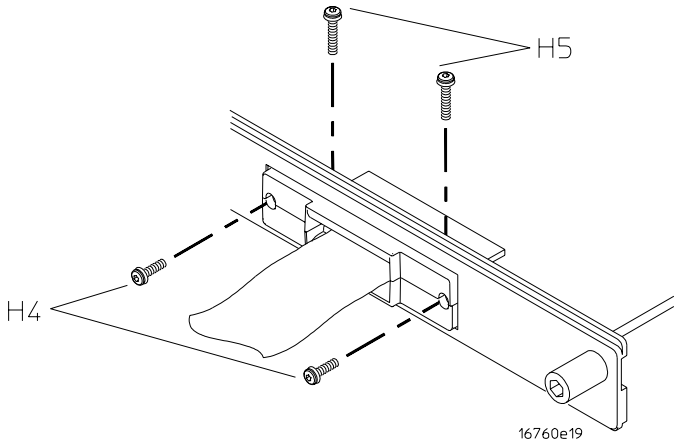

c Tighten the short rear panel cable clamp screws (H4) to 5 in/lb. Then tighten the longer cable clamp screws (H5) to 5 in/lb.

CAUTION: If you over tighten the screws, the threaded inserts on the rear panel, the threaded inserts on the circuit board, or the cable clamp itself might break. Tighten the screws only enough to hold the cable in place, approximately 5 in/lb.

ManualsPlus.com

To replace the circuit board

1 Remove both logic analyzer cables using the “To remove the logic analyzer cable” procedure on page 130.

2 Remove the four screws attaching the ground spring and back panel to the circuit board, then remove the back panel and the ground spring.

3 Replace the faulty circuit board with a new circuit board. On the faulty board, make sure the 20-pin ribbon cable is connected between J3 and J6.

4 Position the ground spring and back panel on the back edge of the replacement circuit board. Install four screws to connect the back panel and ground spring to the circuit board.

5 Install both logic analyzer cables using the procedure “To install the logic analyzer cable” on page 131.

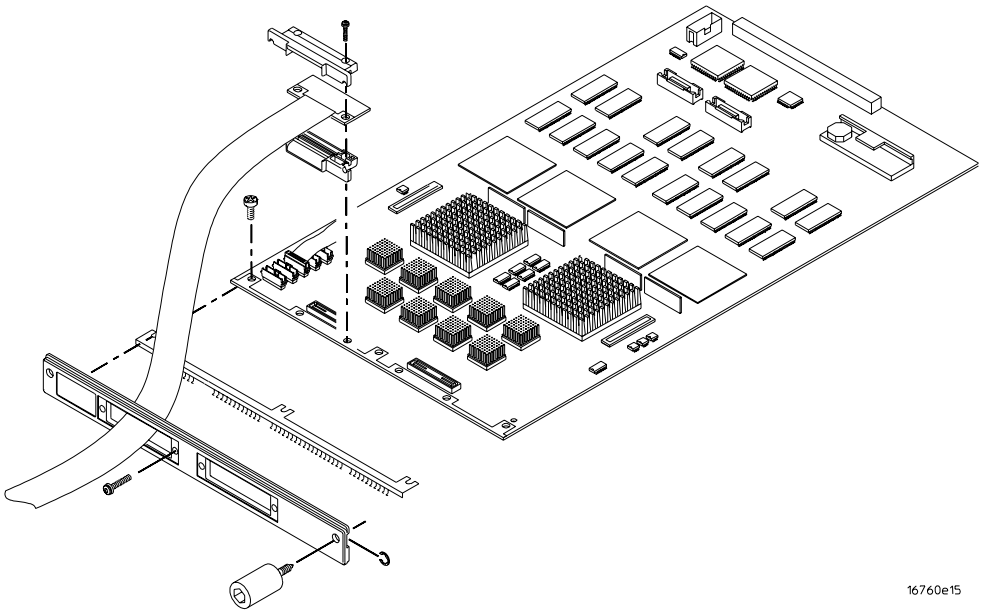

ManualsPlus.com

To replace the module

1 If the module consists of one card, go to step 2.

If the module consists of more than one card, connect the cables together in a master/expander configuration. Follow the procedure “To configure a multi-card module” on page 20.

2 Slide the cards above the slots for the module about halfway out of the mainframe.

3 With the probe cables facing away from the instrument, slide the module approximately halfway into the mainframe.

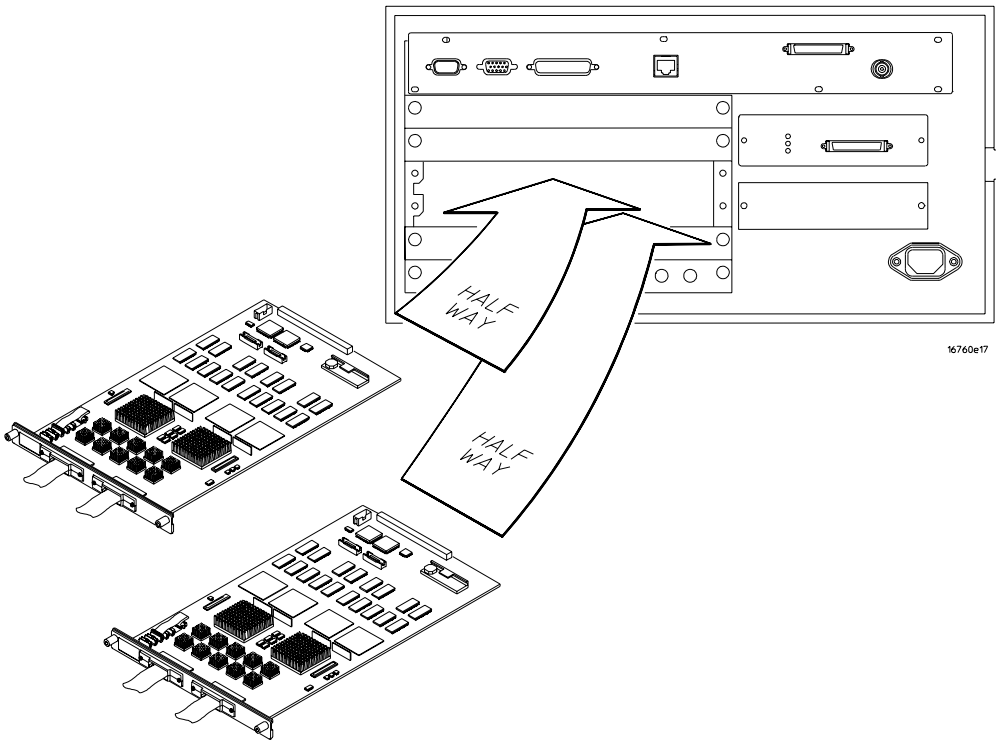

4 Slide the complete module into the mainframe, but not completely in.

Each card in the instrument is firmly seated and tightened one at a time in step 6.

ManualsPlus.com

5 Position all cards and filler panels so that the endplates overlap.

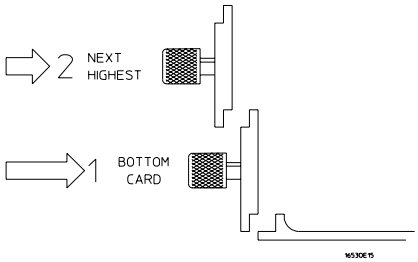

6 Seat the cards and tighten the thumbscrews.

Starting with the bottom card, firmly seat the cards into the backplane connector of the mainframe. Keep applying pressure to the center of the card endplate while tightening the thumbscrews finger-tight. Repeat this for all cards and filler panels starting at the bottom and moving to the top.

CAUTION: Correct air circulation keeps the instrument from overheating. For correct air circulation, filler panels must be installed in all unused card slots. Keep any extra filler panels for future use.

ManualsPlus.com

To return assemblies

Before shipping the module to Agilent Technologies, contact your nearest Agilent Technologies Sales Office for additional details. Information on contacting Agilent can be found at http://www.agilent.com.

1 Write the following information on a tag and attach it to the module.

- Name and address of owner
- Model number
- Serial number
- Description of service required or failure indications

2 Remove accessories from the module.

Only return accessories to Agilent Technologies if they are associated with the failure symptoms.

3 Package the module.

You can use either the original shipping containers, or order materials from an Agilent Technologies sales office.

CAUTION: For protection against electrostatic discharge, package the module in electrostatic material.

4 Seal the shipping container securely, and mark it FRAGILE.

ManualsPlus.com

Replaceable Parts

This chapter contains information for identifying and ordering replaceable parts for your module.

ManualsPlus.com

Replaceable Parts Ordering

Parts listed

To order a part on the list of replaceable parts, quote the Agilent Technologies part number, indicate the quantity desired, and address the order to the nearest Agilent Technologies Sales Office.

Parts not listed

To order a part not on the list of replaceable parts, include the model number and serial number of the module, a description of the part (including its function), and the number of parts required. Address the order to your nearest Agilent Technologies Sales Office.

Direct mail order system

To order using the direct mail order system, contact your nearest Agilent Technologies Sales Office.

Within the USA, Agilent Technologies can supply parts through a direct mail order system. The advantages to the system are direct ordering and shipment from the Agilent Technologies Part Center in Mountain View, California. There is no maximum or minimum on any mail order. (There is a minimum amount for parts ordered through a local Agilent Technologies Sales Office when the orders require billing and invoicing.) Transportation costs are prepaid (there is a small handling charge for each order) and no invoices.

In order for Agilent Technologies to provide these advantages, a check or money order must accompany each order. Mail order forms and specific ordering information are available through your local Agilent Technologies Sales Office. Addresses and telephone numbers are located in a separate document shipped with the *Agilent Technologies 16700-Series Logic Analysis System Service Manual*.

Exchange assemblies

Some assemblies are part of an exchange program with Agilent Technologies.

The exchange program allows you to exchange a faulty assembly with one that has been repaired and performance verified by Agilent Technologies.

After you receive the exchange assembly, return the defective assembly to Agilent Technologies. A United States customer has 30 days to return the defective assembly. If you do not return the defective assembly within the 30 days, Agilent Technologies will charge you an additional amount. This amount is the difference in price between a new assembly and that of the exchange assembly. For orders not originating in the United States, contact your nearest

ManualsPlus.com

Agilent Technologies Sales Office for information.

See Also

"To return assemblies" on page 136.

Replaceable Parts List

The replaceable parts list is organized by reference designation and shows exchange assemblies, electrical assemblies, then other parts.

Information included for each part on the list consists of the following:

- Reference designator
- Agilent Technologies part number
- Total quantity included with the module (Qty)
- Description of the part

Reference designators used in the parts list are as follows:

- A Assembly
- H Hardware
- J Connector
- MP Mechanical Part
- W Cable

ManualsPlus.com

Replaceable Parts

Ref. Des.	Agilent Part Number	QTY	Description
Exchange Assemblies			
	16760-69516		Exchange Acquisition Board Assembly
Replacement Assemblies			
A1	16760-66516	1	Acquisition Board Assembly
H1	16500-22401	2	Panel Screw
H2	16500-29101	1	Ground Spring
H3	0510-0684	2	Retaining Ring
H4	0515-0372	4	M3.0x0.5 8mm T10 (Cable Clamp to Rear Panel)
H5	0515-0375	4	M3.0x0.5 16mm T10 (Cable Clamp to Acquisition Board)
H6	0515-0430	3	MSPH M3.0x0.50 6mm T10 (Rear Panel to Acquisition Board)
MP1	01650-94312	1	Label Set - Probe and Cable
MP2	16760-44107	1	Rear Panel
MP3	16760-44108	4	Logic Analyzer Cable Clamp (two clamps per cable)
MP4	16760-94309	1	Module ID Label
W1	16555-61605	1	Cable (2x20)
W2	16715-60001	1	Master/Expander Cable Kit
W3	16760-61601	2	Logic Analyzer Cable
Accessories for Connectivity to the System Under Test			
	E5379A		Differential Probe
	E5378A		Single-Ended Probe, 100-pin
	E5380A		Single-Ended Probe, 38-pin
	E5382A		Flying Lead Probe
	E5381A		Differential Flying Lead Probe Set
	E5386A		Half-channel Adapter
	E5387A		Differential Soft Touch Connectorless Probe
	E5390A		Single-ended Soft Touch Connectorless Probe
	1253-3620		Samtec Connector
	16760-02302		Shroud for 0.062" PC Boards
	16760-02303		Shroud for 0.120" PC Boards
	16760-68702		*Shroud/Connector Kit for 0.062" PC Boards
	16760-68703		*Shroud/Connector Kit for 0.120" PC Boards
	1252-7431		MICTOR Connector
	E5346-44703		MICTOR Shroud for 0.170" PC Boards
	E5346-44704		MICTOR Shroud for 0.125" PC Boards
	E5346-68700		*Shroud/Connector Kit for 0.125" PC Boards

*Shroud/Connector kits include connectors (Qty 5) and shrouds (Qty 5) for the indicated system under test circuit board thickness.

ManualsPlus.com

Exploded View

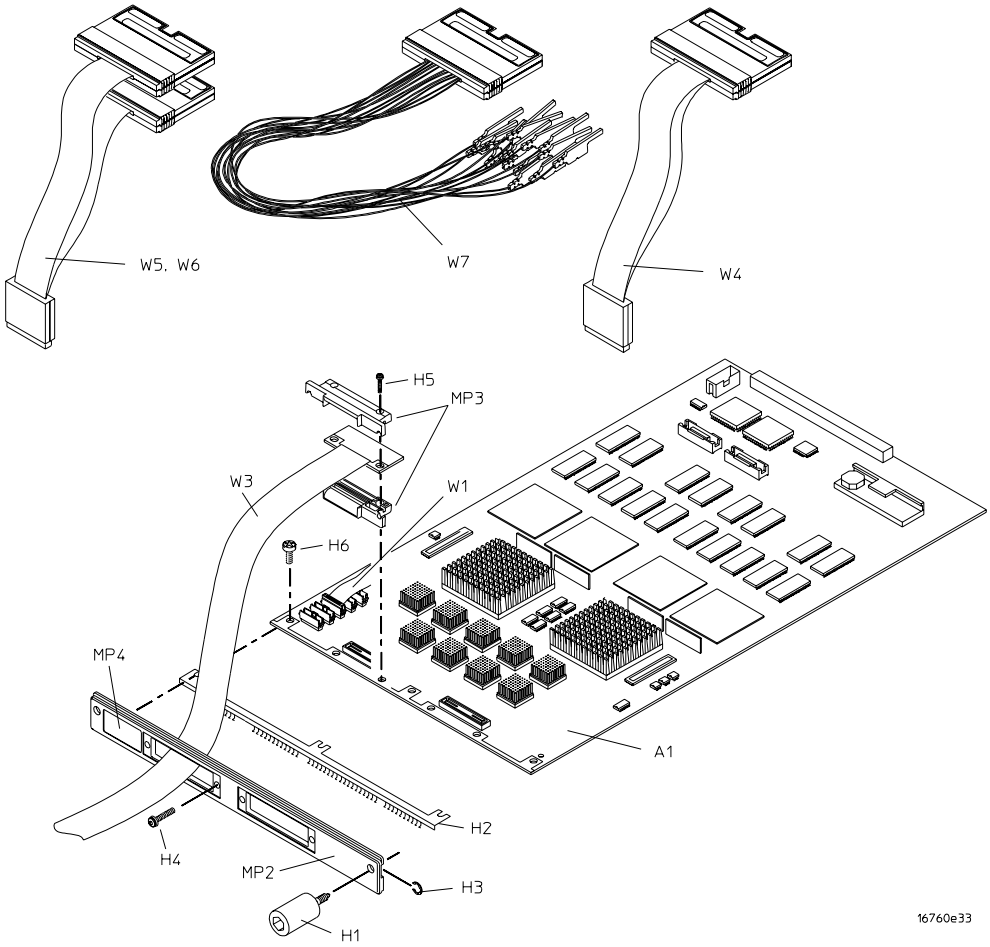

Exploded view of the 16760A logic analyzer

ManualsPlus.com

E5382A Accessories

The following figure shows the accessories supplied with the E5382A Single-ended Flying Lead Probe Set.

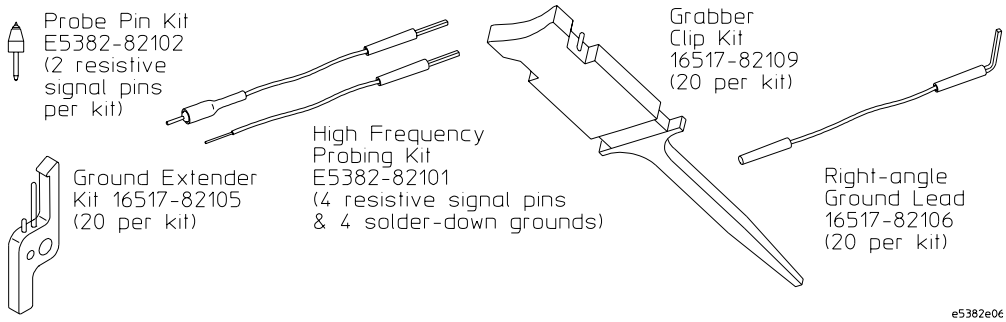

Accessories supplied

The following table shows the part numbers for ordering replacement parts and additional accessories.

Replaceable Parts and Additional Accessories

Description	Qty	Agilent Part Number
Probe Pin Kit	4	16517-82107
High Frequency Probing Kit (4 resistive signal pins & 4 solder-down grounds)	8	16517-82104
Ground Extender	20	16517-82105
Grabber Clip Kit	20	16517-92109
Right-angle Ground Lead	20	16517-82106
Cable - Main	1	E5382-61601
Probe Tip to BNC Adapter	1	E9638A

ManualsPlus.com

Theory of Operation

This chapter presents the theory of operation for the logic analyzer module and describes the self-tests.

ManualsPlus.com

The information in this chapter is to help you understand how the module operates and what the self-tests are testing. This information is not intended for component-level repair.

Block-Level Theory

The block-level theory of operation is divided into two parts: theory for the logic analyzer used as a single-card module or as a master card in a multi-card module, and theory for the logic analyzer used as an expander card in a multi-card module. A block diagram is shown before each theory.

The 16760A logic analyzer

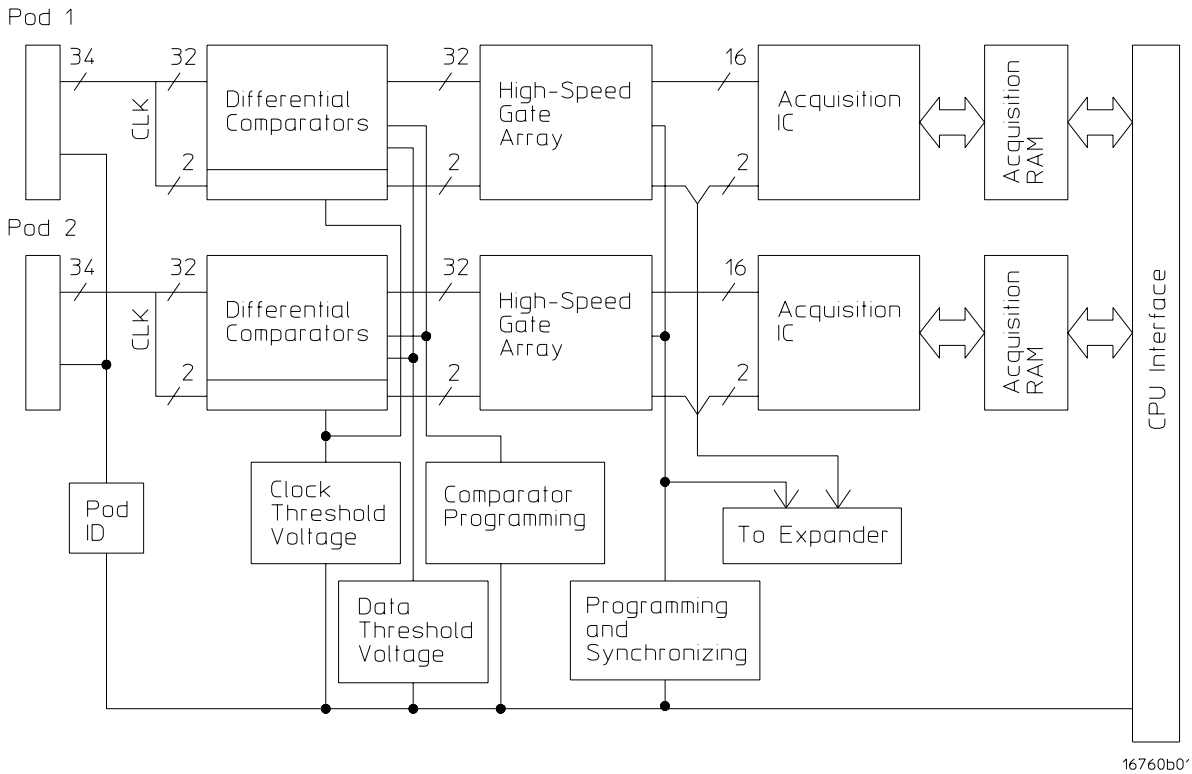

Probe Adapter and Pods. Each pod includes 17 differential channels of analysis data, a threshold voltage input, two serial I2C lines for adapter probe identification, and 50 ground signals. The 17 differential channels of are fed from the probe adapter into the logic analyzer cable (pod) input. For signal-ended operation, the negative side of each of the 17 differential signals is coupled to ground inside the single-ended probe adapter.

On the end of the Samtec probe adapter is a 100-pin application-specific Samtec

ManualsPlus.com

connector. The mate to this Samtec connector must be designed into and installed in the system under test. Analysis of single-ended or differential signals is performed depending on whether the single-ended or differential probe adapter is used.

A Mictor-compatible probe adapter is also available. Like the Samtec probe adapter, the Mictor probe adapter is used for single-ended signal analysis through a Mictor connector designed in and installed into a system under test. Note that the performance of the logic analyzer module is limited when a Mictor-compatible probe adapter is used.

A threshold voltage input is provided through the probe adapter and pod for the user to configure the logic analyzer threshold voltage using the threshold voltage of the system under test. The logic analyzer module will then utilize the threshold voltage input to determine the logic high and logic low state of the incoming signals. The logic analysis system user interface allows the user to select the threshold voltage input. The threshold voltage input is designed with safeguards to protect the logic analyzer module from destructive effect of electro-static discharge (ESD).

The serial I2C lines are used to communicate with the probe adapter for identification. Periodic polling allows hot insertion of the probe adapter to the 16760A pod. When the probe adapter is installed at the end of the pod, the logic analyzer module polls the ID of the probe adapter. The module then configures itself for either single-ended or differential signal analyzer. The serial I2C lines are also designed with ESD safeguards.

The pods provide a 5 Vdc $\pm$5% auxiliary power to the end of the cable. A thermal protection circuit senses any over-current and automatically disables the auxiliary power. The auxiliary power circuit is designed wit safeguards to protect the logic analyzer module from the effects of electro-mechanical interference (EMI). Diatonically, a voltage ramp circuit allows an analysis probe to be hot inserted onto the end of the pod cable. Note that there are currently no analysis probes or other accessories utilizing this auxiliary power that are designed for the 16760A logic analyzer module as of the printing of this service manual.

Comparators. The comparators are differential input/differential output devices that interpret the incoming data and clock signals as either high or low. Threshold voltage, programmed by the user through the user interface, is set by a digital-to-analog converter (DAC) coupled to the negative side of the differential signal through a precision resistor. There are separate DAC-driven threshold voltages for the data and for the clock. In addition, the comparator contains a diode in which the junction temperature is monitored to ensure the module is being properly cooled.

Much of the performance optimization for the module is accomplished by the comparators, including channel delay setting (EyeFinder), programming of input resistance, and frequency compensation adjustment. Module operation such as

ManualsPlus.com

state clock modes and configuration are also done by the comparators. A digital-to-analog convertor (DAC) provides the module threshold voltage for single-ended operation. The voltage at the DAC outputs are buffered to prove sufficient line drive. An analog switch is used to channel either the module threshold voltage from the DAC or the threshold voltage input from the system under test to the comparators.

High Speed Gate Array. The high speed gate arrays sample the incoming data in the high speed state modes. The gate arrays have differential inputs and single-ended outputs and translate the incoming data from differential to single-ended signals. The output of the high speed gate arrays is channeled to the input of the acquisition ICs. A synchronizing signal ensures the gate arrays sample the data in step. A programming interface configures the operation of the gate arrays. In addition, each gate array device contains a diode in which the junction temperature is monitored to ensure the module is being cooled properly.

Acquisition IC. Each acquisition circuit is made up of a single acquisition IC. Each acquisition IC functions as a 17-channel state/timing logic analyzer. Two acquisition ICs are included on every single logic analyzer card for a total of 32 data channels and 2 clock/data channels. All of the sequencing, storage qualification, pattern/range recognition and even counting functions are performed by the acquisition IC.

The acquisition ICs perform master clocking functions. The state acquisition clock is sent to each acquisition IC, and the acquisition ICs generate their own sample clock. Every time the user selects RUN, the acquisition ICs individually perform a clock optimization before data is stored. Clock optimization involves using programmable delays in the acquisition ICs to position the master sampling clock transition where valid data is captured. This procedure reduces the effects of channel-to-channel skew and other propagation delays.

In timing acquisition mode, a 100 MHz backplane clock from the logic analysis system mainframe drives the sample rate of the acquisition ICs. A master acquisition IC monitors the RUN signal asserted based on user input. The master acquisition IC then gates the sample clocks to all other acquisition ICs in the module.

Acquisition memory. The acquisition memory is a bank of 16-bit SDRAM devices and stores the processed data from the acquisition IC. Acquisition memory input/output is controlled by a memory controller, a bank of field programmable gate arrays (FPGA). The memory controller is initialized when power is applied to the logic analysis system from files stored on the system hard disk drive. During normal operation of the module, then memory controller is reprogrammed based on configuration of the module from user input. a second initialization file is loaded into the memory controller when the performance verification software is loaded into the system.

ManualsPlus.com

CPU Interface. The CPU interface is a programmable logic device that converts the bus signals generated by the microprocessor on the mainframe CPU card into control signals for the logic analyzer module. All functions of the state and timing module can be controlled from the backplane of the mainframe system including storage qualification, sequencing, assigning clock edges, RUN and STOP, and thresholds. Data transfer between the logic analyzer cards and the mainframe CPU is also accomplished through the CPU interface.

Master/Expander Configuration

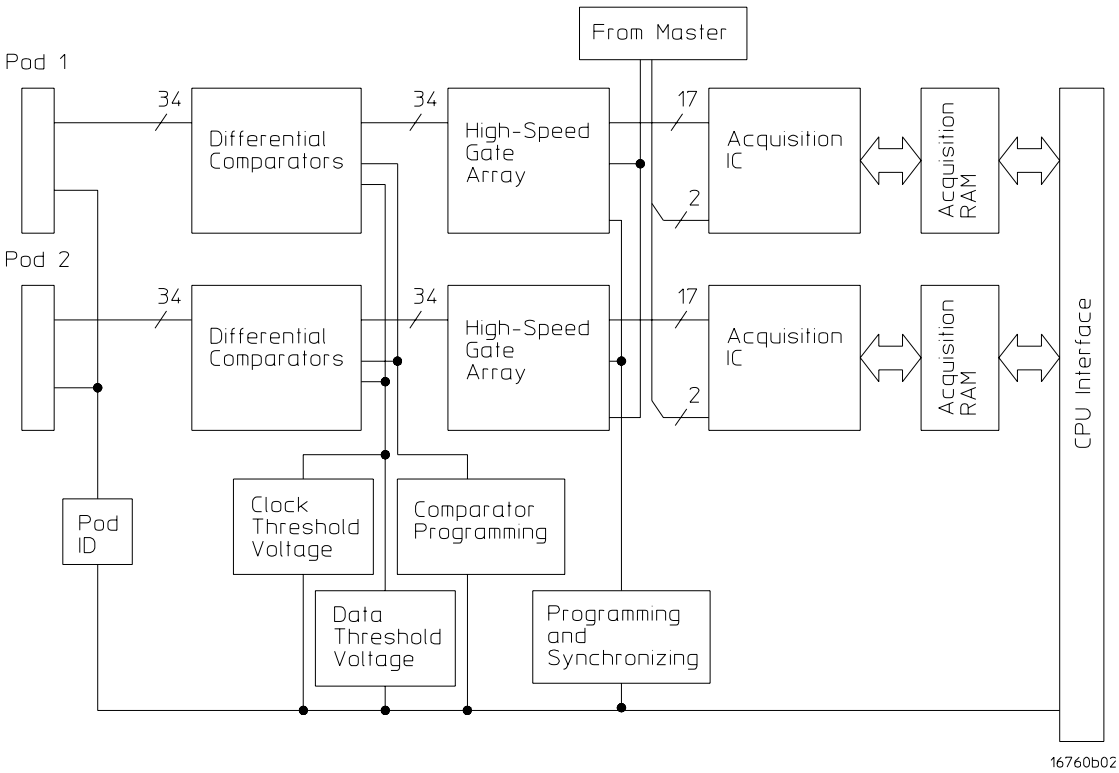

Connectors J3 and J8 route clock and signals for operational accuracy calibration to expander boards in a master/expander multicard module. The master-configured module has the common connector (J3) cabled to the master connector (J6) expander board have their common connector cabled to the expander connectors (J4, J5, J7, and J8) of the master-configured board. Clock signals generated from either the master acquisition IC (timing mode) or from the system under test (state mode) are distributed to the expander boards through the master/expander star connectors. Clock generation is disabled to all expander boards. Additionally, a pattern found signal is routed from all configured expander boards to the master board through the star connectors. When the module is in pattern search mode, the pattern found signal is asserted by the expander board with the found pattern.

ManualsPlus.com

Connectors J9, J10, J500, and J501 form and acquisition IC pattern resource bus.

In addition to the master board, identification and operational configuration of the expander boards are done through the CPU interface.

ManualsPlus.com

A

accessories, 10
acquisition, 106
  IC, 146
  memory, 146
ADC
  test, 110
assemblies
  exchange, 138
  return, 136

B

block-level theory, 144

C

cable
  install, 131
  remove, 130
  test E5378A cable, 113
  test E5379A cable, 121
calibrating
  see also testing performance
calibration, 99
  strategy, 100
characteristics, 12
  environmental, 12
circuit board
  replace, 133
clean module, 29
cleaning the instrument, 151
comparators, 145
comparators calibration
  test, 111
comparators programming
  test, 110
comparators V offset
  test, 111
configure
  multi-card module, 20
  one-card module, 18
cooling fan, 10
CPLD register, 106
CPU interface, 147

D

data path demux
  test, 111
data path pass-thru
  test, 111
demux data arrays programming
  test, 110

E

EEPROM
  test, 110
environment
  characteristics, 12
  operating, 16
equipment
  test, 13, 33
exchange assemblies, 138
exit test system, 112
eye finder, 56
  adjusting, 56

F

fan
  cooling, 10
features, 2
flowcharts, 102
FPGA
  load test, 106
  register test, 106

G

general information, 9
global arm lines, 109

H

high speed gate array, 146
HW Accelerated Search
  test, 108

I

install
  logic analyzer cable, 131
install module, 26
instrument warm-up, 33
instrument, cleaning the, 151
inter-chip resource bus, 109
inter-module flag bits, 109

L

LA chip calibration
  test, 111
local arm lines, 109

M

mainframe, 10
  fans, 10
  operating system, 102
  prepare, 17
memory
  address bus test, 107
  analyzer bus SU/H measure, 109
  analyzer chip bus test, 108
  data bus test, 107
  DMA unload test, 108
  HW assisted cell test, 107
  sleep mode test, 108
  unload modes test, 107
module
  clean, 29
  inspect, 16
  install, 26
  remove, 128
  replace, 134
  test, 28
multi-card module, 20, 95
  configure, 20
  test, 32

O

one-card module
  configure, 18
  test, 32
operating
  environment, 16
  system, 10, 102

P

parts
  ordering, 138
  replaceable, 139
performance test record, 96
power
  requirements, 16
  system, 28
preparing for use, 15
probe ID read
  test, 110
probing, 144

R

remove
  logic analyzer cable, 130
  module, 128
replace
  circuit board, 133
  module, 134
replaceable parts, 137
replacing assemblies, 127
return assemblies, 136

ManualsPlus.com

S

self-test, 105
  description, 106
specifications, 11
storage, 16
system
  backplane clock, 109
  operating, 10, 102
  test, 112
  turn on, 28

T

test
  ADC, 110
  analyzer chip memory bus, 108
  analyzer memory bus SU/H measure, 109
  chip registers, 108
  comparators calibration, 111
  comparators programming, 110
  comparators V offset, 111
  CPLD register, 106
  data path demux, 111
  data path pass-thru, 111
  demux data arrays programming, 110
  E5378A cable, 113
  E5379A cables, 121
  EEPROM, 110
  equipment, 13, 33
  FPGA load, 106
  FPGA register, 106
  global and local arm lines, 109
  HW accelerated search, 108
  HW assisted memory cell, 107
  inter-chip resource bus, 109
  inter-module flag bits, 109
  interval, 32
  LA chip calibration, 111
  memory address bus, 107
  memory data bus, 107
  memory DMA unload, 108
  memory sleep mode, 108
  memory unload modes, 107
  module, 28
  multi-card module, 32, 95
  one-card module, 32
  performance record, 96
  probe ID read, 110
  record description, 32
  self-test, 105
  strategy, 32
  system, 112
  system backplane clock, 109
  system clocks, 108
testing performance, 31
  equipment, 13, 33
  interval, 32
  multi-card module, 32
  test record, 96
theory of operation, 143
tools required, 128
troubleshooting, 101

ManualsPlus.com

Safety Notices

This apparatus has been designed and tested in accordance with IEC Publication 1010, Safety Requirements for Measuring Apparatus, and has been supplied in a safe condition. This is a Safety Class I instrument (provided with terminal for protective earthing). Before applying power, verify that the correct safety precautions are taken (see the following warnings). In addition, note the external markings on the instrument that are described under "Safety Symbols."

Warnings

• Before turning on the instrument, you must connect the protective earth terminal of the instrument to the protective conductor of the (mains) power cord. The mains plug shall only be inserted in a socket outlet provided with a protective earth contact. You must not negate the protective action by using an extension cord (power cable) without a protective conductor (grounding). Grounding one conductor of a two-conductor outlet is not sufficient protection.

• Only fuses with the required rated current, voltage, and specified type (normal blow, time delay, etc.) should be used. Do not use repaired fuses or short-circuited fuseholders. To do so could cause a shock or fire hazard.

• If you energize this instrument by an auto transformer (for voltage reduction or mains isolation), the common terminal must be connected to the earth terminal of the power source.

• Whenever it is likely that the ground protection is impaired, you must make the instrument inoperative and secure it against any unintended operation.

• Service instructions are for trained service personnel. To avoid dangerous electric shock, do not perform any service unless qualified to do so. Do not attempt internal service or adjustment unless another person, capable of rendering first aid and resuscitation, is present.

• Do not install substitute parts or perform any unauthorized modification to the instrument.

• Capacitors inside the instrument may retain a charge even if the instrument is disconnected from its source of supply.

• Do not operate the instrument in the presence of flammable gasses or fumes. Operation of any electrical instrument in such an environment constitutes a definite safety hazard.

• Do not use the instrument in a manner not specified by the manufacturer.

To clean the instrument

If the instrument requires cleaning: (1) Remove power from the instrument. (2) Clean the external surfaces of the instrument with a soft cloth dampened with a mixture of mild detergent and water. (3) Make sure that the instrument is completely dry before reconnecting it to a power source.

Safety Symbols

Instruction manual symbol: the product is marked with this symbol when it is necessary for you to refer to the instruction manual in order to protect against damage to the product..

Hazardous voltage symbol.

Earth terminal symbol: Used to indicate a circuit common connected to grounded chassis.

Agilent Technologies
P.O. Box 2197
1900 Garden of the Gods Road
Colorado Springs, CO 80901

Notices

© Agilent Technologies, Inc. 2001-2004

No part of this manual may be reproduced in any form or by any means (including electronic storage and retrieval or translation into a foreign language) without prior agreement and written consent from Agilent Technologies, Inc. as governed by United States and international copyright laws.

Manual Part Number

16760-97013, May 2004

Print History

16760-97011, August 2003
16760-97009, September 2002
16760-97006, December 2001
16760-97003, May 2001

Agilent Technologies, Inc.
1900 Garden of the Gods Road
Colorado Springs, CO 80907 USA

Restricted Rights Legend

If software is for use in the performance of a U.S. Government prime contract or subcontract, Software is delivered and licensed as "Commercial computer software" as defined in DFAR 252.227-7014 (June 1995), or as a "commercial item" as defined in FAR 2.101(a) or as "Restricted computer software" as defined in FAR 52.227-19 (June 1987) or any equivalent agency regulation or contract clause. Use, duplication or disclosure of Software is subject to Agilent Technologies' standard commercial license terms, and non-DOD Departments and Agencies of the U.S. Government will receive no greater than Restricted Rights as defined in FAR 52.227-19(c)(1-2) (June 1987). U.S. Government users will receive no greater than Limited Rights as defined in FAR 52.227-14 (June 1987) or DFAR 252.227-7015 (b)(2) (November 1995), as applicable in any technical data.

Document Warranty

The material contained in this document is provided "as is," and is subject to being changed, without notice, in future editions. Further, to the maximum extent permitted by applicable law, Agilent disclaims all warranties, either express or implied, with regard to this manual and any information contained herein, including but not limited to the implied warranties of merchantability and fitness for a particular purpose. Agilent shall not be liable for errors or for incidental or consequential damages in connection with the furnishing, use, or performance of this document or of any information contained herein. Should Agilent and the user have a separate written agreement with warranty terms covering the material in this document that conflict with these terms, the warranty terms in the separate agreement shall control.

Technology Licenses

The hardware and/or software described in this document are furnished under a license and may be used or copied only in accordance with the terms of such license.

WARNING

A WARNING notice denotes a hazard. It calls attention to an operating procedure, practice, or the like that, if not correctly performed or adhered to, could result in personal injury or death. Do not proceed beyond a WARNING notice until the indicated conditions are fully understood and met.

CAUTION

A CAUTION notice denotes a hazard. It calls attention to an operating procedure, practice, or the like that, if not correctly performed or adhered to, could result in damage to the product or loss of important data. Do not proceed beyond a CAUTION notice until the indicated conditions are fully understood and met.

ManualsPlus.com