Programmer's Quick Reference Guide

Publication Number 54810-97065
February 2001

For Safety information, Warranties, and Regulatory information, see the pages at the end of this Guide.

© Copyright Agilent Technologies 1997-2001
All Rights Reserved.

Infiniium Oscilloscopes

In This Book

Chapter 1 shows you how to use the syntax diagrams in Chapter 2.

Chapter 2 contains the syntax diagrams for each command subsystem, and includes tables describing the command parameter values. The syntax diagrams include these command subsystems:

Common
Root Level
System
Acquire
Calibration
Channel
Disk
Display
External Channel
Function
Hardcopy
Histogram
Marker
Measure
Mask Test
Self-Test
Time Base
Trigger
Waveform
Waveform Memory

Contents

1 How To Remotely Program Infiniium Oscilloscopes

Using Program Headers 1-3
How To Generate Commands 1-4
Specifying Syntax of Program Messages 1-6
Specifying Syntax of Program Data 1-7
Interpreting Syntax Diagrams 1-8
Understanding A Sample Syntax Diagram 1-10
Using the Command Tree 1-13

2 Command Syntax Diagrams

Common Commands 2-4
Root Commands 2-6
SYSTem Commands 2-8
ACQuire Commands 2-10
CALibration Commands 2-13
CHANnel Commands 2-14
DISK Commands 2-18
DISPlay Commands 2-20
EXTernal Channel Commands 2-27
FUNCtion Commands 2-30
HARDcopy Commands 2-34
HISTogram Commands 2-35
MARKer Commands 2-37
MEASure Commands 2-40
Mask TESt Commands 2-50
SELFtest Commands 2-56
TIMebase Commands 2-57
TRIGger Commands 2-59
WAVeform Commands 2-79
Waveform MEMory (WMEMory) Commands 2-81

1

How To Remotely Program Infiniium Oscilloscopes

Programming Syntax

Computers communicate with the oscilloscope by sending and receiving program messages over a remote interface. To program the oscilloscope remotely, you must understand the command format and structure expected by the oscilloscope. The IEEE 488.2 syntax rules govern how individual elements such as headers, separators, program data, and terminators are grouped together to form complete instructions.

This chapter describes how to:

- Use program headers
- Generate commands
- Specify syntax of program messages
- Specify syntax of program data
- Interpret syntax diagrams
- Understand a sample syntax diagram
- Use the command tree

Using Program Headers

Program headers are key words that identify commands. There are two types of program headers:

- Common Command
- Oscilloscope Control

Headers for Common Commands

Common command headers are IEEE 488.2-defined commands and queries. Common command headers are preceded by an asterisk. Two examples of common commands are:

```
*SAV <register>
*SAV <register>;*TRG
```

Headers for Oscilloscope Control Commands

Headers for oscilloscope control commands are typically related to oscilloscope measurement and control. These commands are preceded by a colon (:). The purpose of colons in oscilloscope-control headers is described in “Tree Traversal Rules” later in this chapter.

How To Generate Commands

You can specify keywords and headers for oscilloscope control using either the long form or the short form of a command. Sending a header that is not the short form or the complete long form for the command causes the Infiniium Oscilloscope to generate an error.

IEEE 488.2 limits the length of a header to 12 characters, including any numeric suffix. The long form header is either a single word or an abbreviation of a phrase. The short form header is an abbreviation of the long form header.

The syntax diagrams in this manual show both the long form and the short form for each command. The short form of a command is shown in uppercase letters.

How the Long-Form Command is Generated

The long-form command is generated from either a single word or from multiple words. When a single word is used, that word becomes the command. For example, WAVEFORM.

If multiple words are used, generally the first letter of each word and the entire last word make up the command. For example, WMEMORY for WAVEFORM MEMORY.

How the Short-Form Command is Generated

The short form command is usually the first four characters of the long form command header. The exception to this is when the long form consists of more than four characters and the fourth character is a vowel. In these cases, the vowel is dropped and the short form becomes the first three characters of the long form.

For example, the short form of MODE is MODE; however, the short form of INTERPOLATE is INT because the fourth character is a vowel.

In the syntax diagrams in this manual, a special notation is used to differentiate the short-form keyword from the long form of the same keyword. The short form of the keyword is shown in uppercase letters, and the rest of the command is shown in lowercase letters. For example, “BandWidth Limit” is shown as “BWLimit”.

Including A Numeric Suffix

Oscilloscope commands allow a numeric suffix to differentiate between multiple instances of the same command, such as with multiple channels, functions, and waveform memories. For example, CHANnel1:BWLimit ON. The numeric suffix is applied to both the long form and short form. For example, CHAN1 is the short form of CHANnel1.

Using Queries

Many of the oscilloscope commands have an additional query form. As defined in IEEE 488.2, a query is a command header with a question mark symbol appended: for example, :TRIGger:MODE?

When the query form of a command is received, the current setting associated with the command is placed in the oscilloscope's output buffer. Queries do not cause any settings within the oscilloscope to change.

When numeric parameters are queried, the result will be returned in fundamental units unless specified otherwise. When several different units may be considered fundamental, the units of the returned result will be documented in the description for the command.

Specifying Syntax of Program Messages

When computers communicate with the oscilloscope over a remote interface, program messages are placed on the bus using an input or output command and passing the device address, instruction, and terminator. Passing the device address ensures that the instruction is sent to the correct interface and oscilloscope.

The instructions for programming the oscilloscope normally appear as a string of ASCII characters in the output statement of a host language available on your computer. Responses from the oscilloscope are read with the input statements of the host language. Figure 1-1 shows the syntax of a typical HP Basic program statement.

Figure 1-1

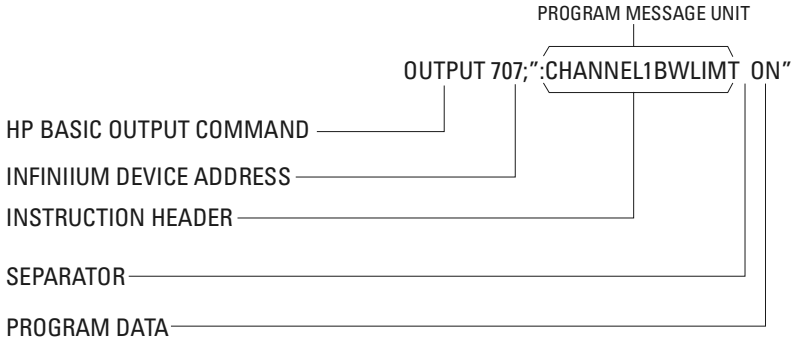

Typical Program Statement Syntax

A program message is terminated by a <NL> (new line). The recognition of the program message terminator, or <PMT>, by the oscilloscope's parser serves as a signal to begin execution of commands. The <PMT> also affects oscilloscope command tree traversal.

Each program message serves as a container for one command. Program messages are separated by a semicolon. A colon preceding the command header returns the parser to the top of the parser tree.

Specifying Syntax of Program Data

Program data is used to convey parameter information related to the command header. At least one space must separate the command header or query header from the program data. For example:

```
<program command><separator> <data><terminator>
```

When a program command or query has multiple program data, a comma separates sequential program data. For example:

```
<program command><separator><data>,<data><terminator>
```

Example

This example shows the two main types of program data used in commands: character and numeric program data.

```
:MEASURE:TVOLT 1.0V,2
```

The two program data are 1.0V and 2.

Interpreting Syntax Diagrams

The flow through syntax diagrams is shown by lines and arrows. These link together various objects used to form a command.

Objects exist in the syntax diagram as either ovals or boxes.

- Ovals indicate literal characters.
- Boxes represent command parameters defined at the end of each syntax diagram or a blank space that separates the command from a parameter.

Flow through the syntax diagram is generally from left to right. You enter the diagram on the left, and the syntax is satisfied when you exit the diagram on the right.

When an element or group of elements in the diagram is repeatable, a reverse, right-to-left path is shown around and above the element(s), and is marked with a left-facing arrow. When an element or group of elements in the diagram are optional, a line is shown above the element(s). A branch in the path indicates a choice of elements.

IEEE 488.2 defines the blocks used to build messages that are sent to the oscilloscope, including program messages and data described earlier. You can therefore divide an entire string of commands into individual components.

In summary:

- A semicolon separates one command from another.
- Multiple data parameters are separated by a commas.
- The first data parameter is separated from the header with one or more spaces.
- :TIMEBASE:RANGE is an example of a compound header (two or more commands separated by colons with no spaces).
- A colon preceding the command header returns the parser to the top of the parser tree. See also Tree Traversal Rules later in this chapter.

Uppercase and Lowercase Equivalence

Uppercase and lowercase letters are considered to be the same by the parser. However, the syntax diagrams in this manual do not show both alternatives.

Because the uppercase and lowercase letters are equivalent, the command `AUTOSCALE` is the same as the command `autoscale`.

Space Characters

Space characters (<space>) are required in some places, and are usually optional when used to increase the readability of a program. Space characters are shown in the syntax diagrams in this manual. A space character is defined as the ASCII character 32 in decimal.

Understanding A Sample Syntax Diagram

In the following syntax diagram and procedure for the measure commands, the procedure shows you how to use the syntax diagram to form the command string to send to the oscilloscope. For each of the following numbered steps, a number is shown on the syntax diagram. Each number represents the part of the diagram with which you are working.

Figure 1-2

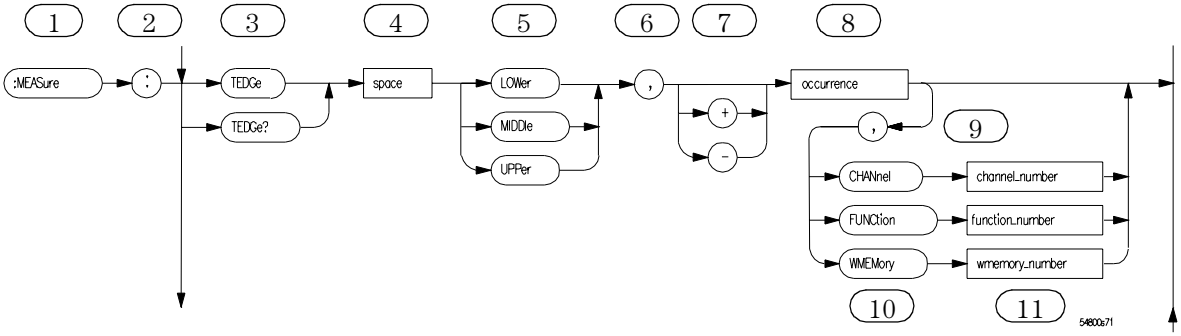

Example Syntax Diagram

1 The first part of the program header is the entry point of the syntax diagram. The long form of the command begins as follows:

```
:MEASure
```

The short form of the command is:

```
:MEAS
```

2 The colon is appended to the end of the command header and separates the first command from the second command in the command header. The long form of the command is:

```
:MEASure:
```

The short form of the command is:

```
:MEAS:
```

3 The second command is appended to the command header.

```
:MEASure:TEDGe
```

The short form of the command is:

```
:MEAS:TEDG
```

4 The space is appended to the program header and separates the program data from the program header.

5. The first program data entry is a set of three possible entries from which you should select one. For this example, we will select MIDDle. This is appended to the end of the program header. The long form is:

   `:MEASure:TEDGe MIDDle`

   The short form of the command is:

   `:MEAS:TEDG MIDD`

6. The comma separates the first program data from the second program data. This is appended to the end of the command string. The long form is:

   `:MEASure:TEDGe MIDDle,`

   The short form of the command is:

   `:MEAS:TEDG MIDD,`

7. The next program data is a set of two possible choices: a plus sign or a minus sign. The line shown above these choices indicates that this program data is optional and therefore not required. We will choose not to add this program data to our command string for this example.

8. The second program data will be an integer which is shown as the parameter `occurrence` in the syntax diagram. For this example, we will append the number 7 to the end of the command string. The long form is:

   `:MEASure:TEDGe MIDDle,7`

   The short form of the command is:

   `:MEAS:TEDG MIDD,7`

9. The next program data set has a line above it which means that it is optional and not required. For this example, we will include this program data in the command string. Therefore, we will append a comma to the command string. The long form is:

   `:MEASure:TEDGe MIDDle,7,`

   The short form of the command is:

   `:MEAS:TEDG MIDD,7,`

10. The next program data is a set of three possible choices: CHANnel, FUNCtion, and WMEMory. We will choose CHANnel. The long form is:

    `:MEASure:TEDGe MIDDle,7,CHANnel`

    The short form of the command is:

    `:MEAS:TEDG MIDD,7,CHAN`

11 The next program data is an integer which is shown as the parameter `channel_number` in the syntax diagram. For this example, we will append the number 2 to the end of the command string. The long form is:

```
:MEASure:TEDGe MIDDle,7,CHANnel2
```

The short form of the command is:

```
:MEAS:TEDG MIDD,7,CHAN2
```

This is the final form of the command string which can be sent to the oscilloscope. If the oscilloscope has an GPIB address of 7, the following HP Basic program would send the command string to the oscilloscope. The long form is:

```
OUTPUT 707;":MEASure:TEDGe MIDDle,7,CHANnel2"
```

The short form of the command is:

```
OUTPUT 707;":MEAS:TEDG MIDD,7,CHAN2"
```

Using the Command Tree

The command tree in Figure 1-3 shows all of the commands in this oscilloscope and the relationship of the commands to each other. The IEEE 488.2 common commands are not listed as part of the command tree because they do not affect the position of the oscilloscope's parser within the tree.

When a program message terminator (<NL>, linefeed - ASCII decimal 10) or a leading colon (:) is sent to the oscilloscope, the parser is set to the "root" of the command tree.

Types of Commands in the Command Tree

The commands in this oscilloscope consist of three types: common commands, root level commands, and subsystem commands.

- Common commands are commands defined by IEEE 488.2 and control some functions that are common to all IEEE 488.2 instruments. These commands are independent of the tree and do not affect the position of the parser within the tree. *RST is an example of a common command.
- Root level commands control many of the basic functions of the oscilloscope. These commands reside at the root of the command tree. They can always be parsed if they occur at the beginning of a program message or are preceded by a colon. Unlike common commands, root level commands place the parser back at the root of the command tree. AUTOSCALE is an example of a root level command.
- Subsystem commands are grouped together under a common node of the command tree, such as the TIMEBASE commands. You may select only one subsystem at a given time. When the oscilloscope is initially turned on, the command parser is set to the root of the command tree and no subsystem is selected.

Tree Traversal Rules

Command headers are created by traversing down the command tree. A legal command header from the command tree is :TIMEBASE:RANGE. This is referred to as a compound header. A compound header is a header made up of two or more commands separated by colons. The compound header contains no spaces. The following rules apply to traversing the tree.

Tree Traversal Rules

A leading colon or a program message terminator (<NL> or EOI true on the last byte) places the parser at the root of the command tree. A leading colon is a colon that is the first character of a program header. Executing a subsystem command places the parser in that subsystem until a leading colon or a program message terminator is found.

In the command tree, use the last command in the compound header as a reference point (for example, RANGE). Then, find the last colon above that command (TIMEBASE:). That is the point where the parser resides. You can send any command below this point within the current program message without sending the commands that appear above them (for example, REFERENCE).

Figure 1-3

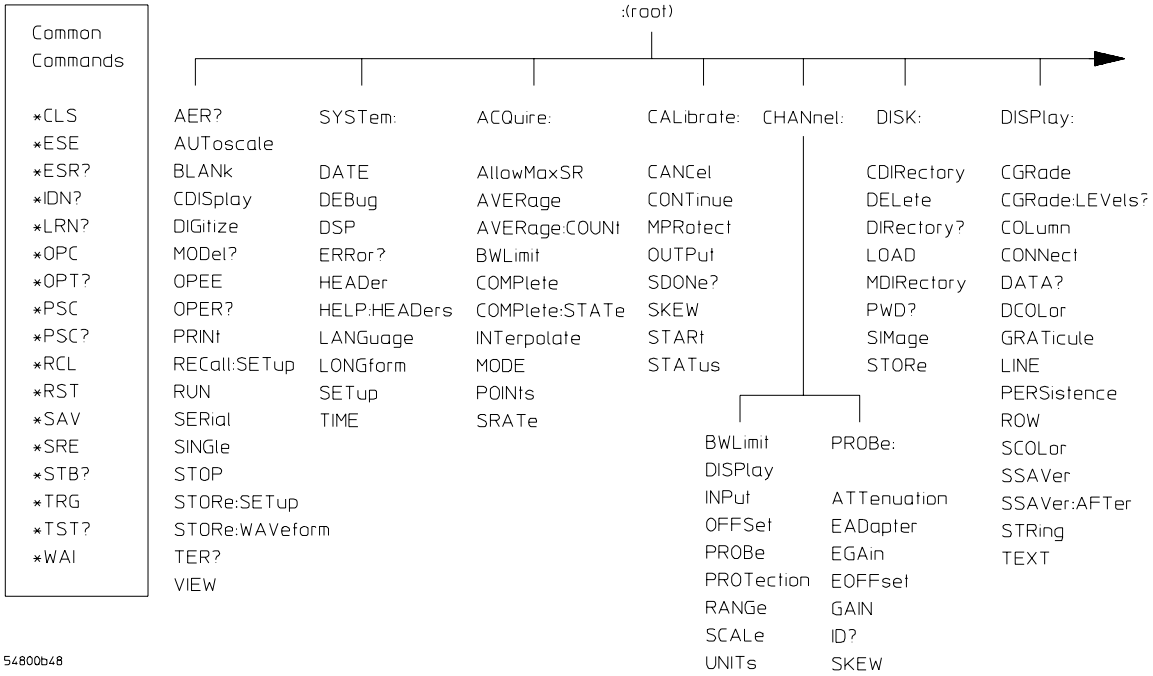

Command Tree

Figure 1-4

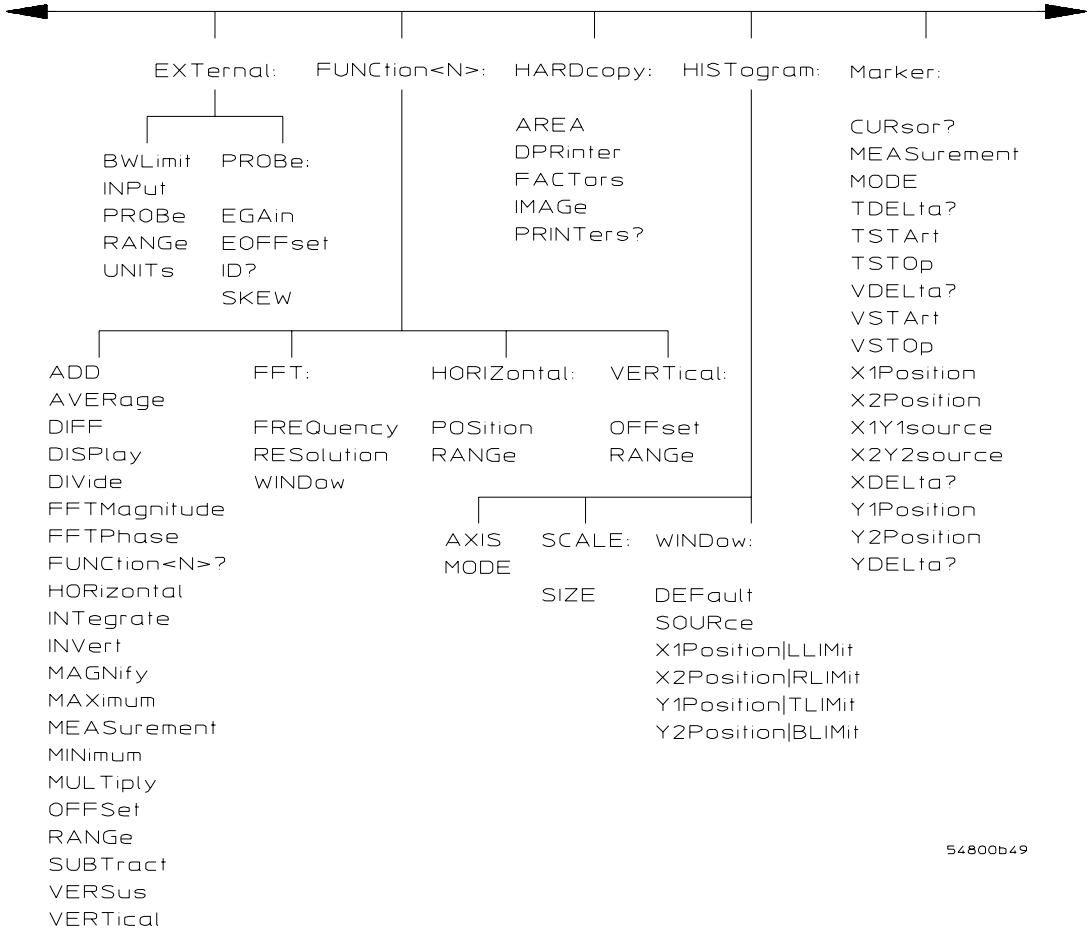

Command Tree (Continued)

Figure 1-5

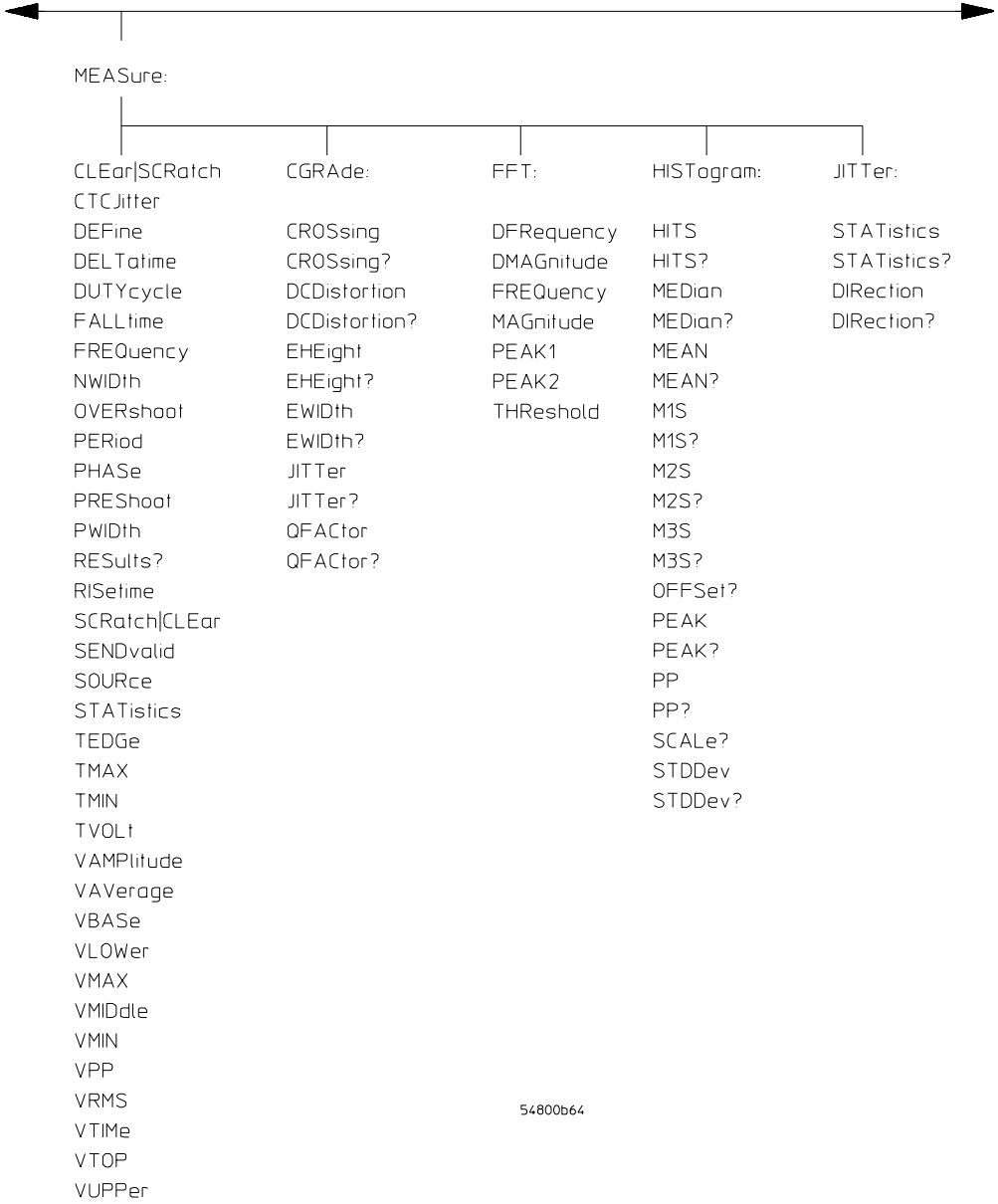

Command Tree (Continued)

Figure 1-6

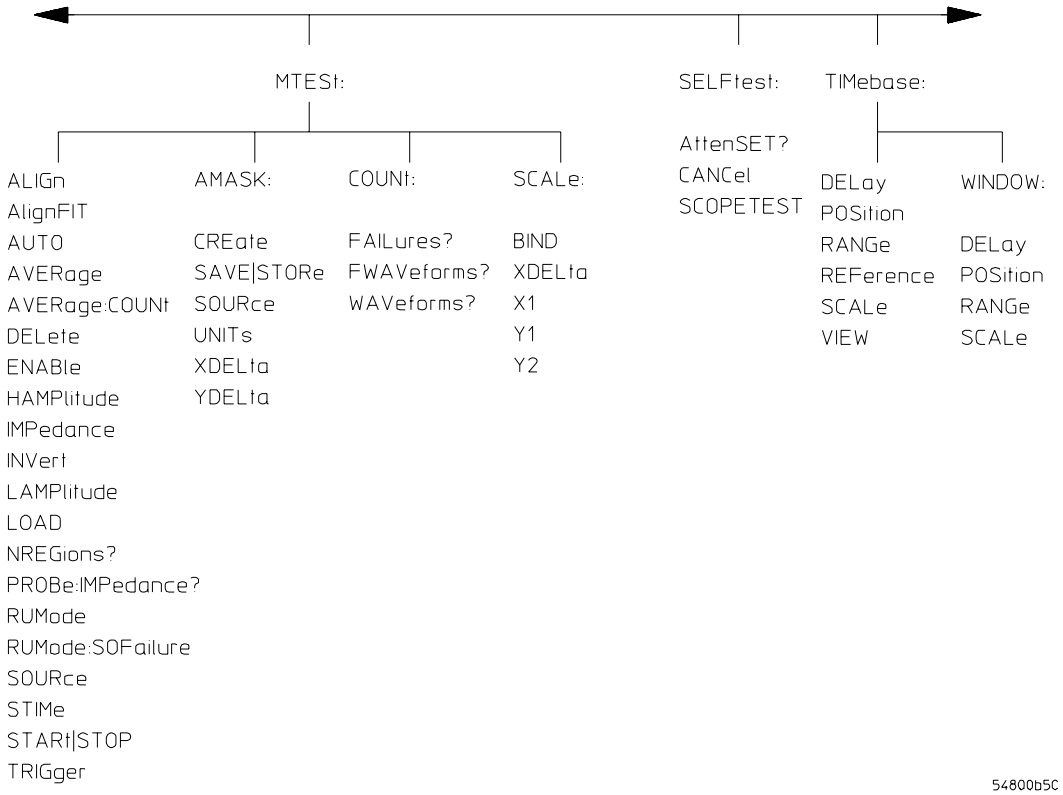

Command Tree (Continued)

Figure 1-7

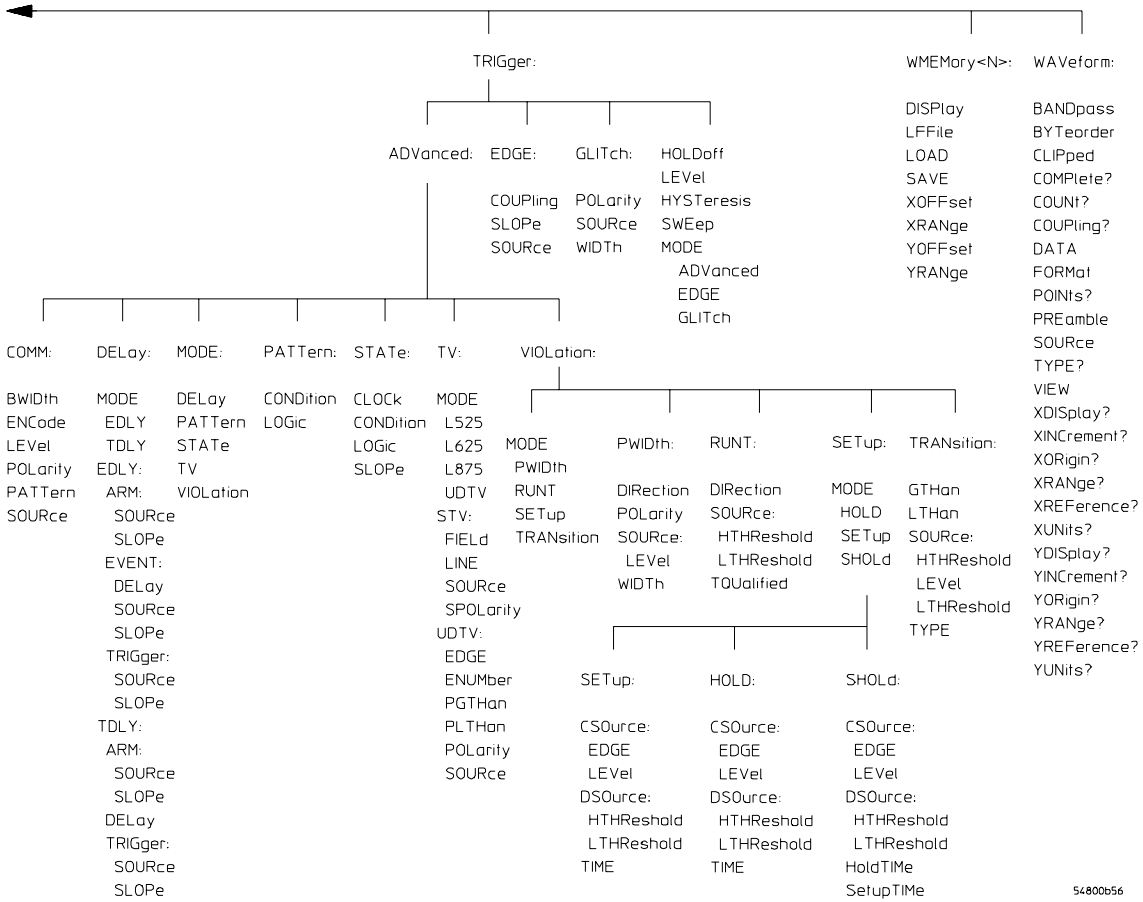

Command Tree (Continued)

Tree Traversal Examples

The OUTPUT statements in the following examples are written using HP BASIC 5.0. The quoted string is placed on the bus, followed by a carriage return and linefeed (CRLF).

Example 1

Consider the following command:

```
OUTPUT 707;":CHANNEL1:RANGE 0.5;OFFSET 0"
```

The colon between CHANNEL1 and RANGE is necessary because CHANNEL1:RANGE is a compound command. The semicolon between the RANGE command and the OFFSET command is required to separate the two commands or operations. The OFFSET command does not need CHANNEL1 preceding it because the CHANNEL1:RANGE command sets the parser to the CHANNEL1 node in the tree.

Example 2

Consider the following commands:

```
OUTPUT 707;":TIMEBASE:REFERENCE CENTER;POSITION
0.00001"
```

or

```
OUTPUT 707;":TIMEBASE:REFERENCE CENTER"
OUTPUT 707;":TIMEBASE:POSITION 0.00001"
```

In the first line of example 2, the “subsystem selector” is implied for the POSITION command in the compound command.

A second way to send these commands is shown in the second part of this example. Because the program message terminator places the parser back at the root of the command tree, you must reselect TIMEBASE to re-enter the TIMEBASE node before sending the POSITION command.

Example 3

Consider the following command:

```
OUTPUT 707;":TIMEBASE:REFERENCE
CENTER;:CHANNEL1:OFFSET 0"
```

In example 3, the leading colon before CHANNEL1 tells the parser to go back to the root of the command tree. The parser can then recognize the CHANNEL1:OFFSET command and enter the correct node.

2

Command Syntax Diagrams

Syntax Diagrams

The example syntax diagrams in this chapter are similar to the syntax diagrams in the IEEE 488.2 specification. Commands and queries are sent to the oscilloscope as a sequence of data bytes.

The allowable byte sequence for each functional element is defined by the syntax diagram that is shown. This sequence can be determined by following a path in the syntax diagram. The proper path through the syntax diagram is any path that follows the direction of the arrows. If there is a path around an element, that element is optional. If there is a path from right to left around one or more elements, that element or those elements may be repeated as many times as desired.

These syntax diagrams show the command subsystems for Infiniium Oscilloscopes:

- Common
- Root Level
- SYSTem
- ACQuire
- CALibration
- CHANnel (1-2 channels for 54810A/20A 1-4 for other models)
- DISK
- DISPlay
- EXTernal (only available in 54810A and 54820A)
- FUNCtion
- HARDcopy
- HISTogram
- MARKer
- MEASure
- Mask TESt
- SELFtest
- TIMebase
- TRIGger
- WAVeform
- WMEMory

Common Commands

Figure 2-1

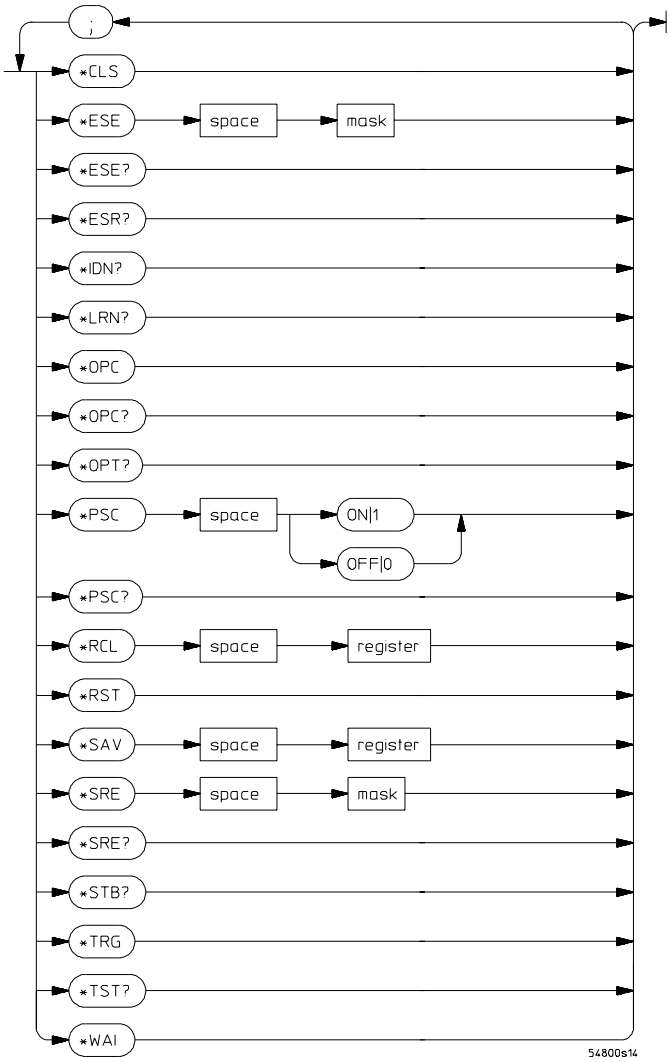

Common Commands Syntax Diagram

Common Command Parameter	Description
mask	An integer, 0 to 255, representing a mask value for the bits to be enabled in the Service Request Enable Register.
register	An integer, 0 through 9, specifying the register used to save the current oscilloscope setup or recall a stored setup.

Root Commands

Figure 2-2

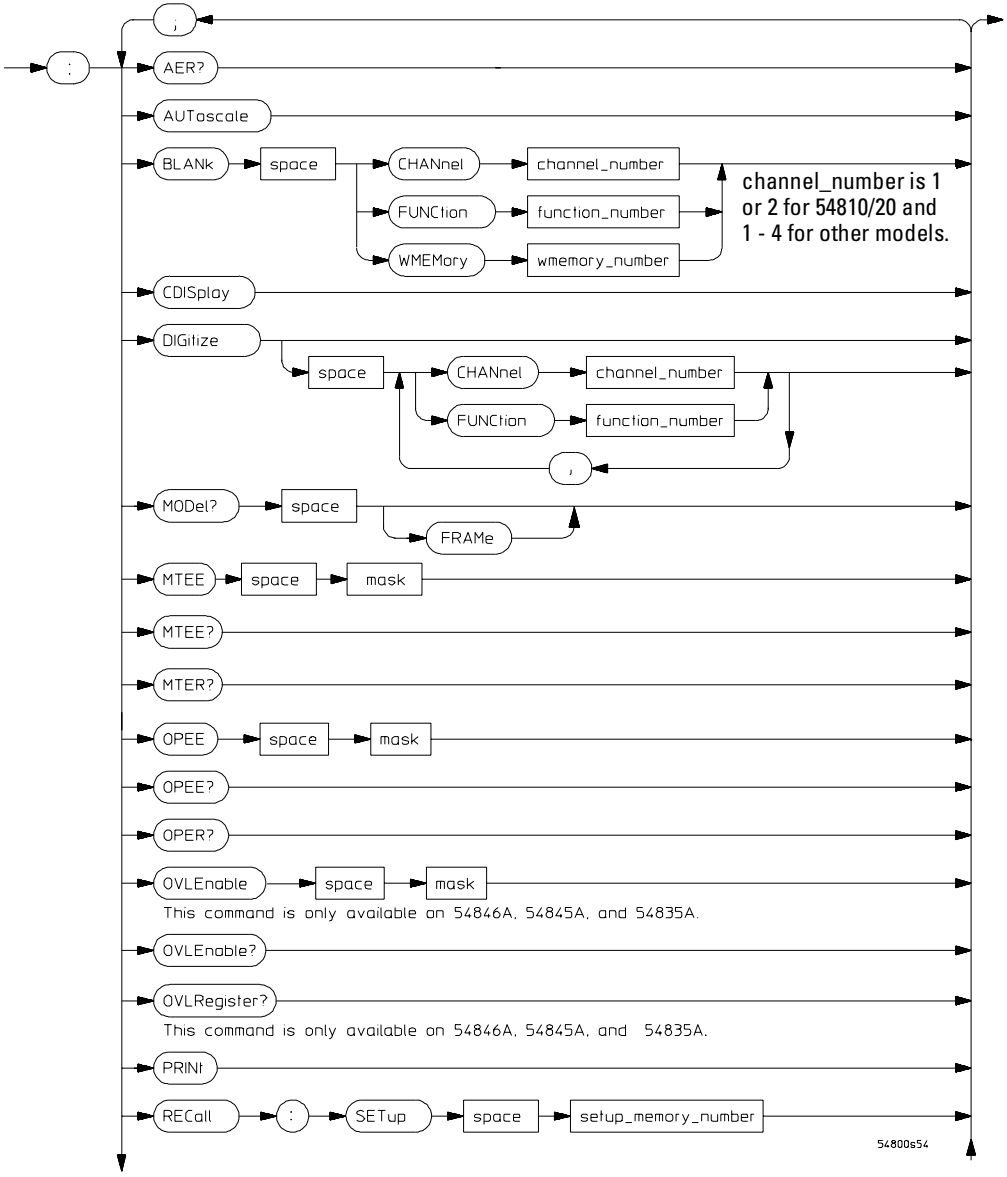

Root Commands Syntax Diagram

Figure 2-3

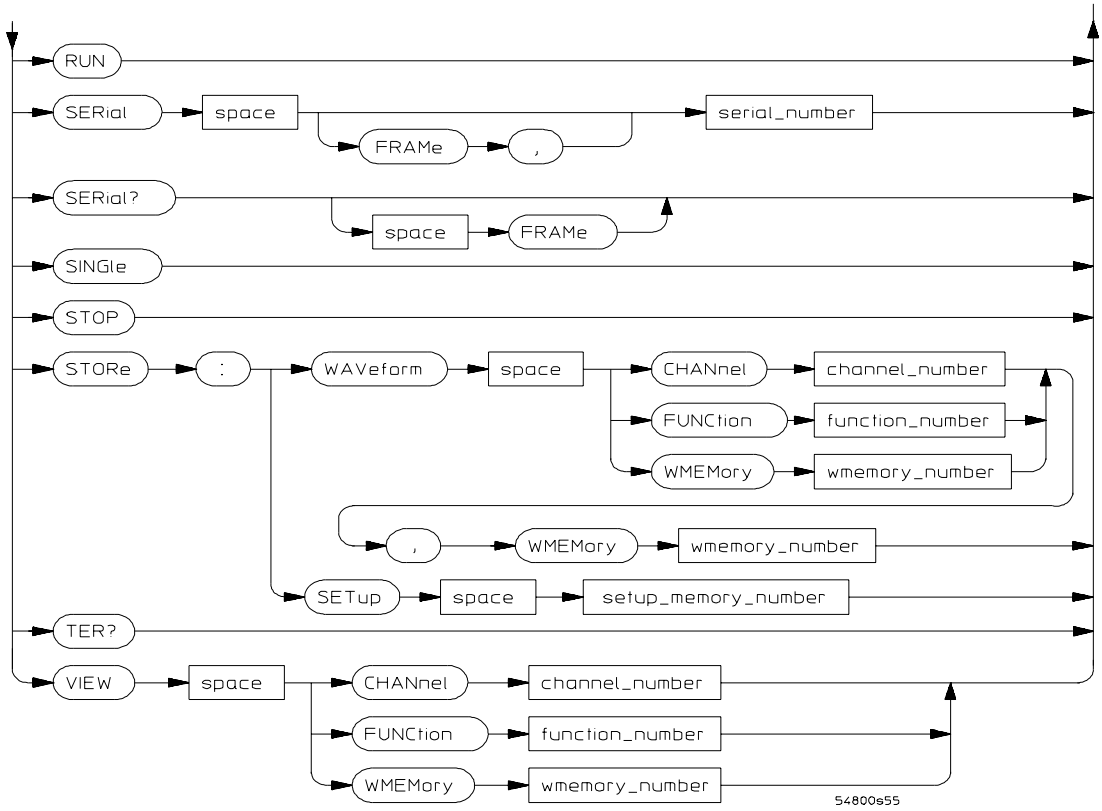

Root Commands Syntax Diagram (Continued)

Root Command Parameter	Description
channel_number, function_number, wmemory_number	An integer, 1 or 2, for 54810 and 54820. An integer, 1 through 4, for all other Infiniium Oscilloscope models.
mask	The decimal weight of the enabled bits.
serial_number	The serial number of the oscilloscope in the form USXXXXXXXX.
setup_memory_number	An integer, 0 through 9.

SYSTem Commands

Figure 2-4

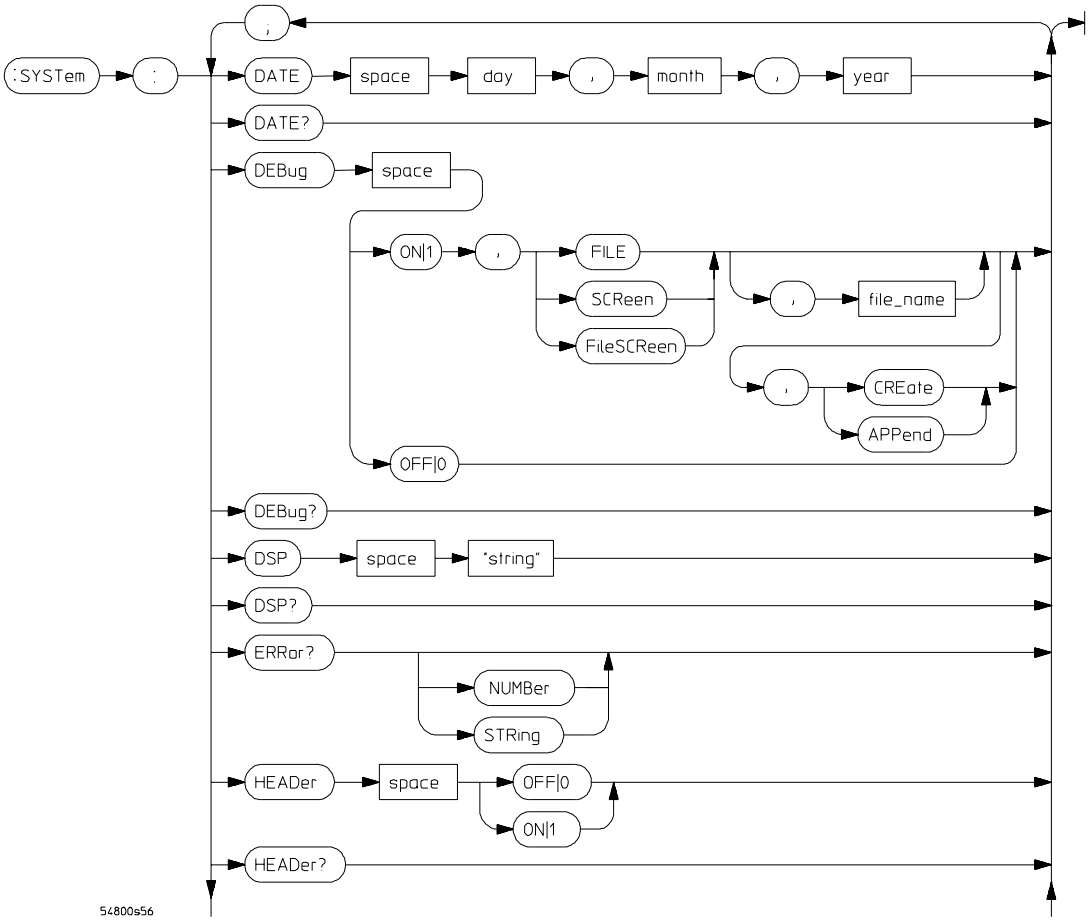

System Commands Syntax Diagram

Figure 2-5

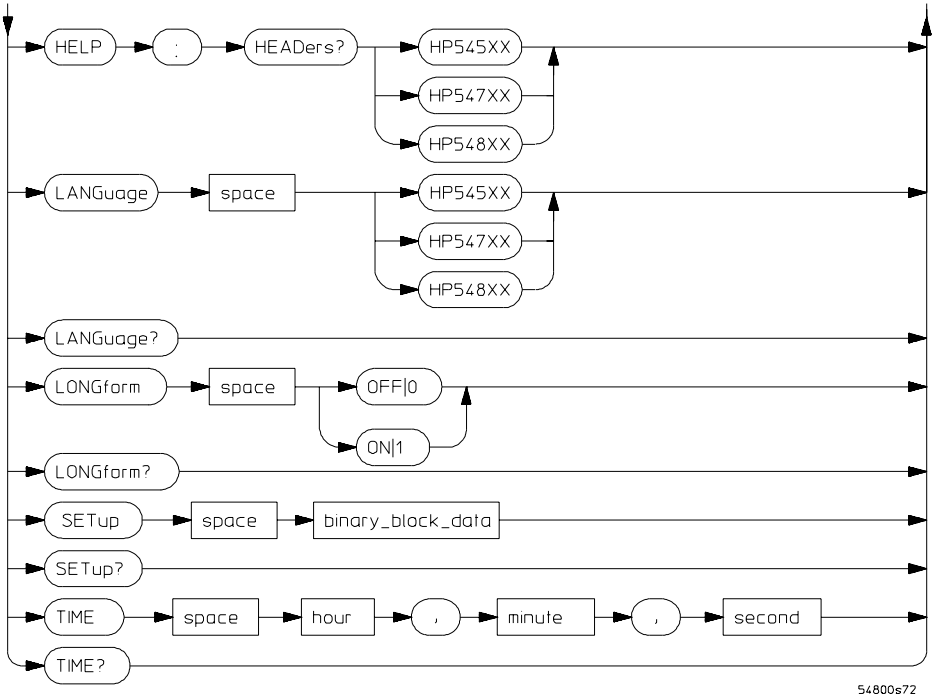

System Commands Syntax Diagram (Continued)

System Command Parameter	Description
binary_block_data	A string, consisting of 2048 bytes of setup data.
day	An integer from 1 to 31.
hour	0..23.
minute	0..59.
month	An integer from 1 to 12.
second	0..59.
string	An alphanumeric character array up to 89 bytes long.
year	An integer.

ACQuire Commands

Figure 2-6

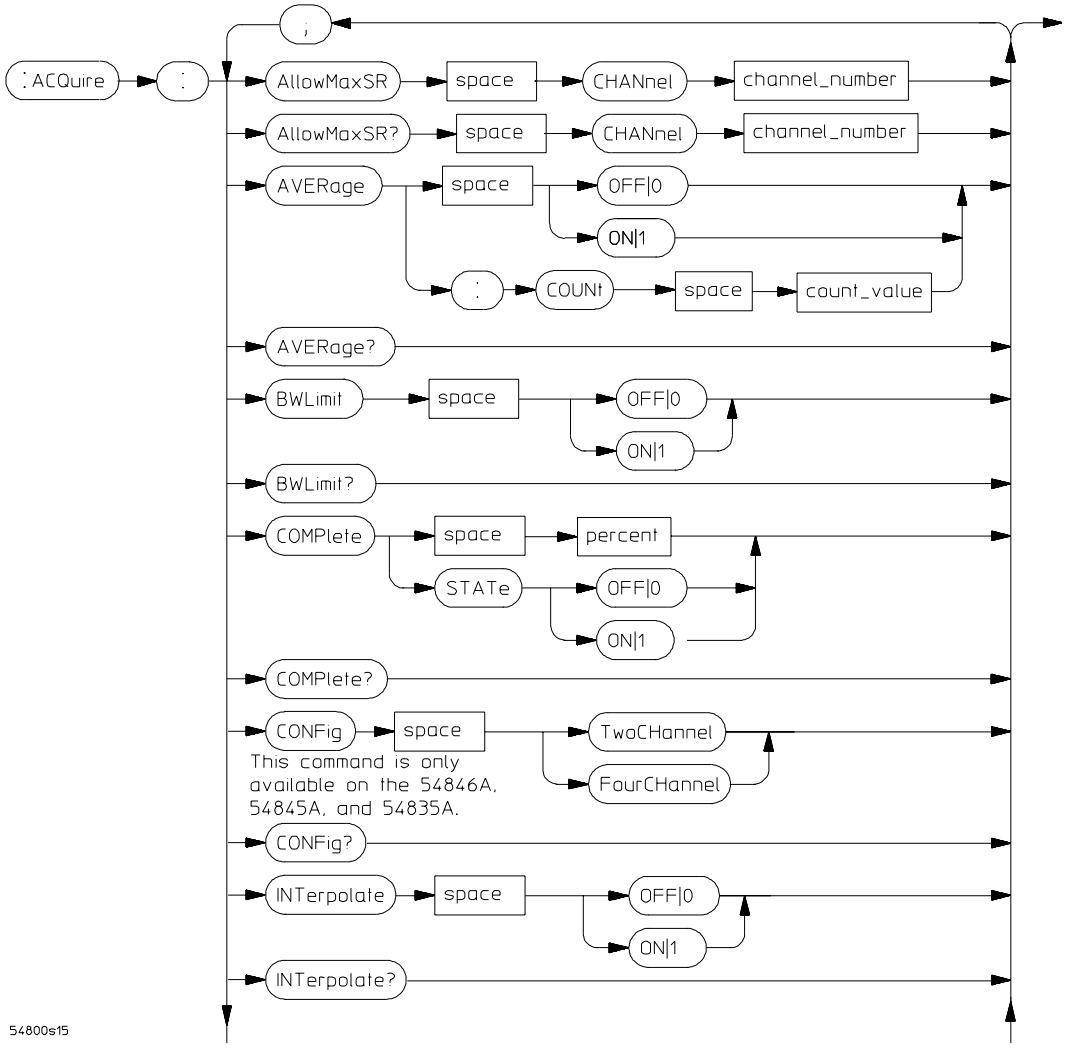

ACQuire Commands Syntax Diagram

Figure 2-7

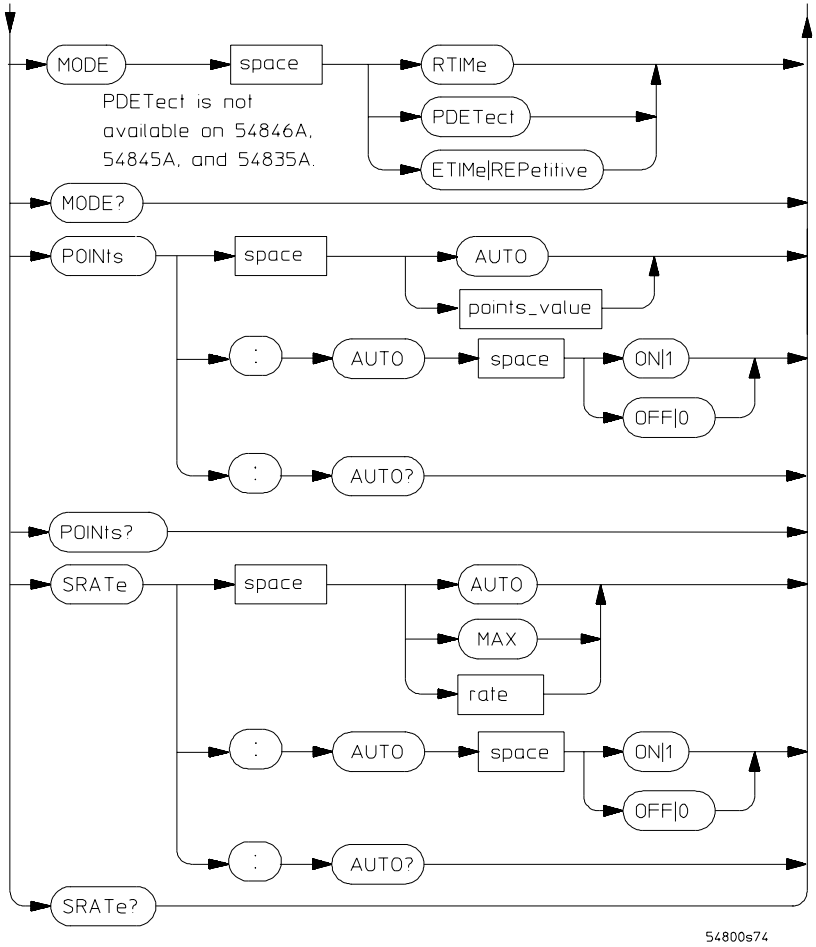

ACQuire Commands Syntax Diagram (Continued)

ACQuire Command Parameter	Description
channel_number	An integer, 1 or 2, for 54810 and 54820. An integer, 1 through 4, for all other Infiniium Oscilloscope models.
count_value	An integer, 2 to 4096.
percent	An integer, 0 to 100.
points_value	An integer (see the Points Value Ranges, Table 2-1, for valid ranges).
rate	A floating-point sample rate (see the SRATe command for valid rates.

Table 2-1 **Points Value Ranges**

	54810A/15A/20A/25A	54846A/45A/35A 2-channel mode	54846A/45A/35A 4-channel mode
Real Time mode	16 to 32768	16 to 65536	16 to 32768
Equivalent Time mode	16 to 32768	mode not available	16 to 32768
Peak Detect mode	16 to 16384	mode not available	mode not available

CALibration Commands

Figure 2-8

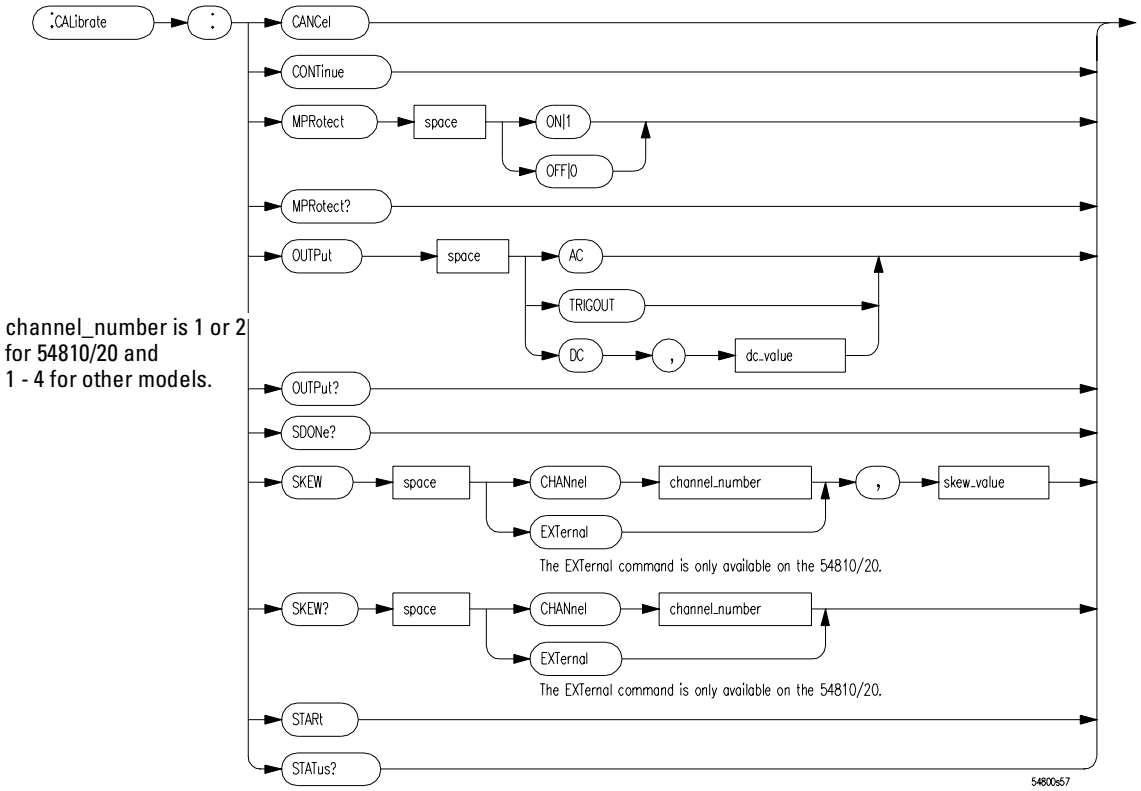

CALibration Commands Syntax Diagram

CALibration Command Parameter	Description
channel_number	An integer, 1 or 2, for 54810 and 54820. An integer, 1 through 4, for all other Infiniium Oscilloscope models.
dc_value	A real number indicating the calibration output DC value, adjustable from -2.5 V to +2.5 V.
skew_value	A real number indicating the channel-to-channel skew.

CHANnel Commands

Figure 2-9

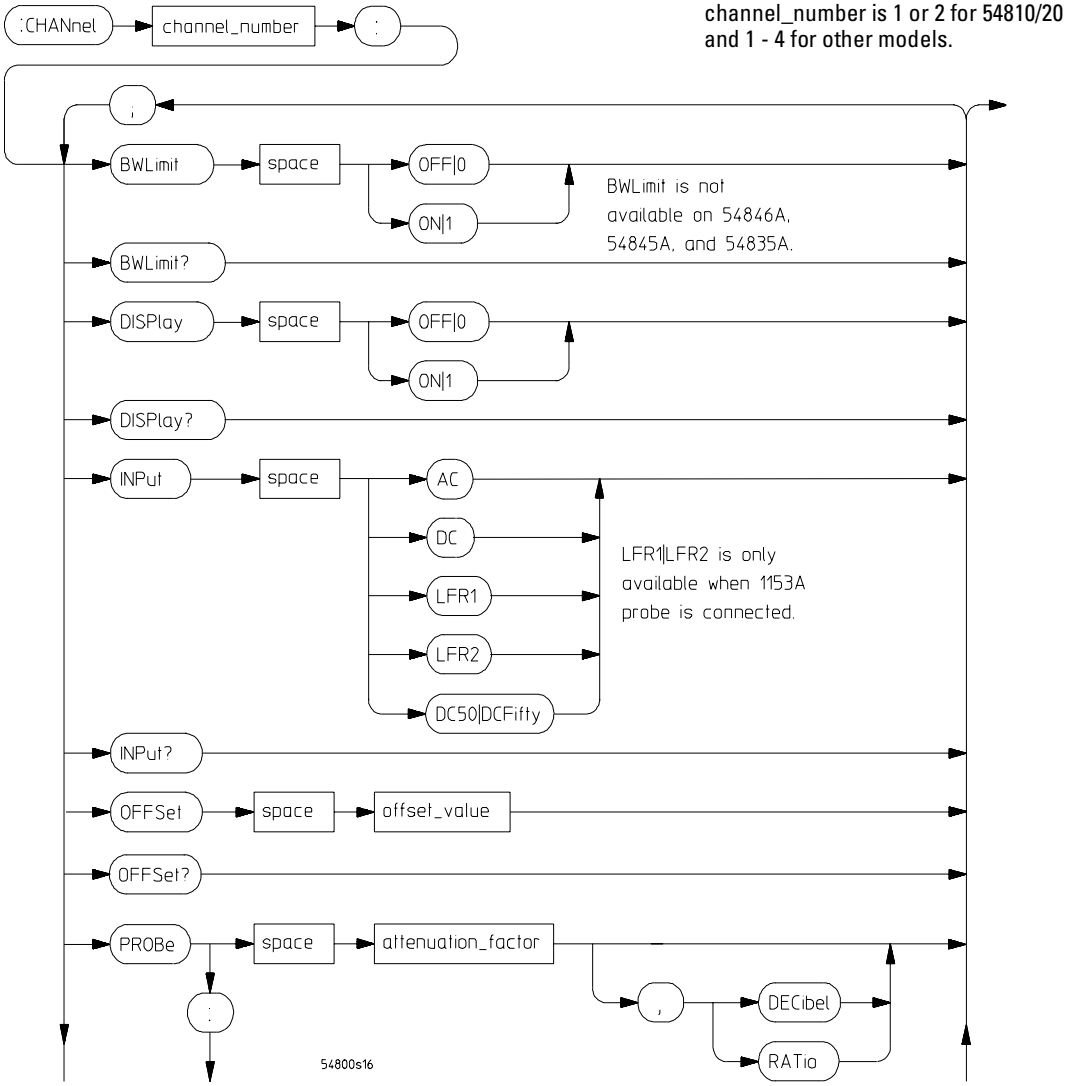

CHANnel Commands Syntax Diagram

Figure 2-10

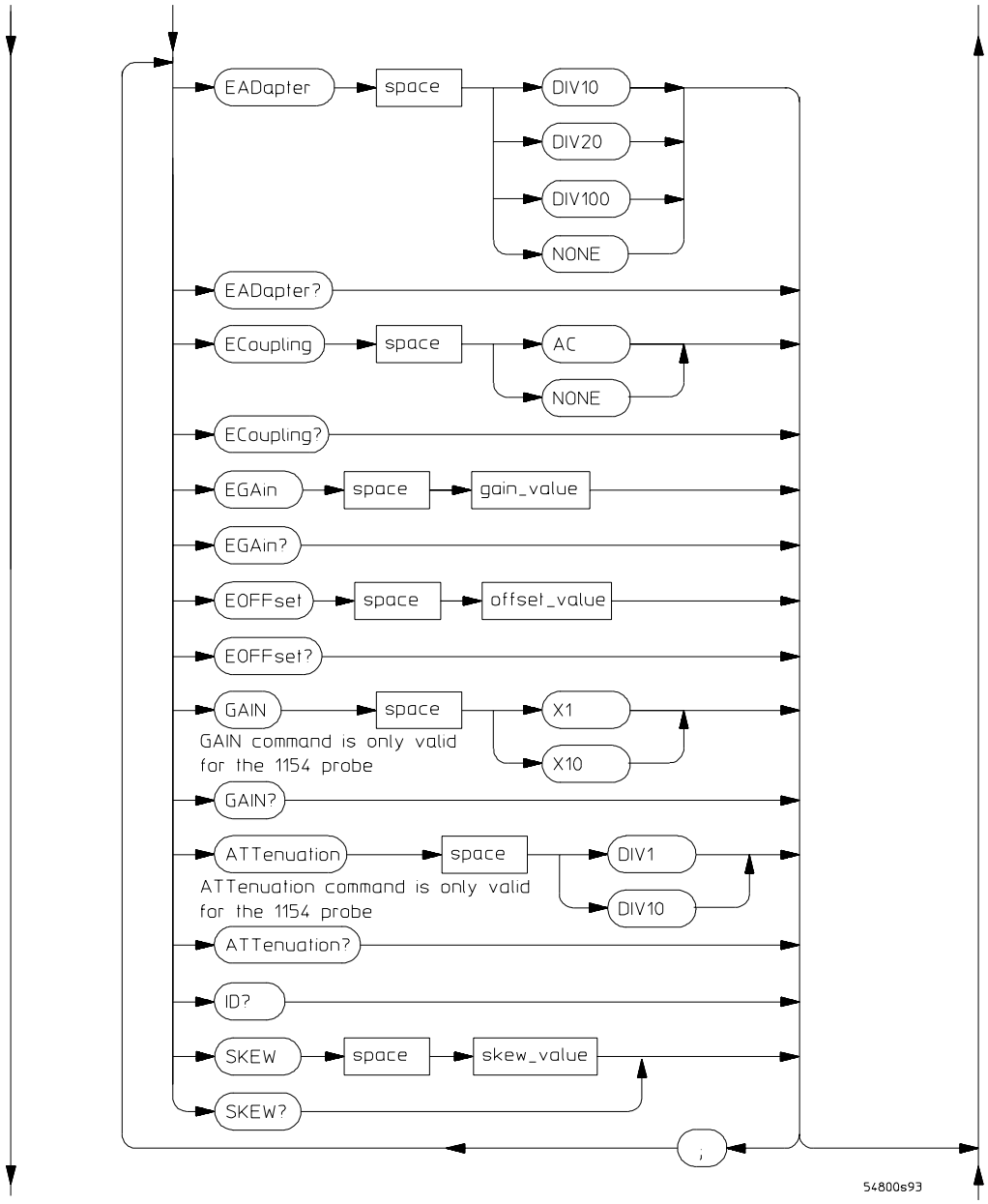

CHANnel Commands Syntax Diagram (Continued)

Figure 2-11

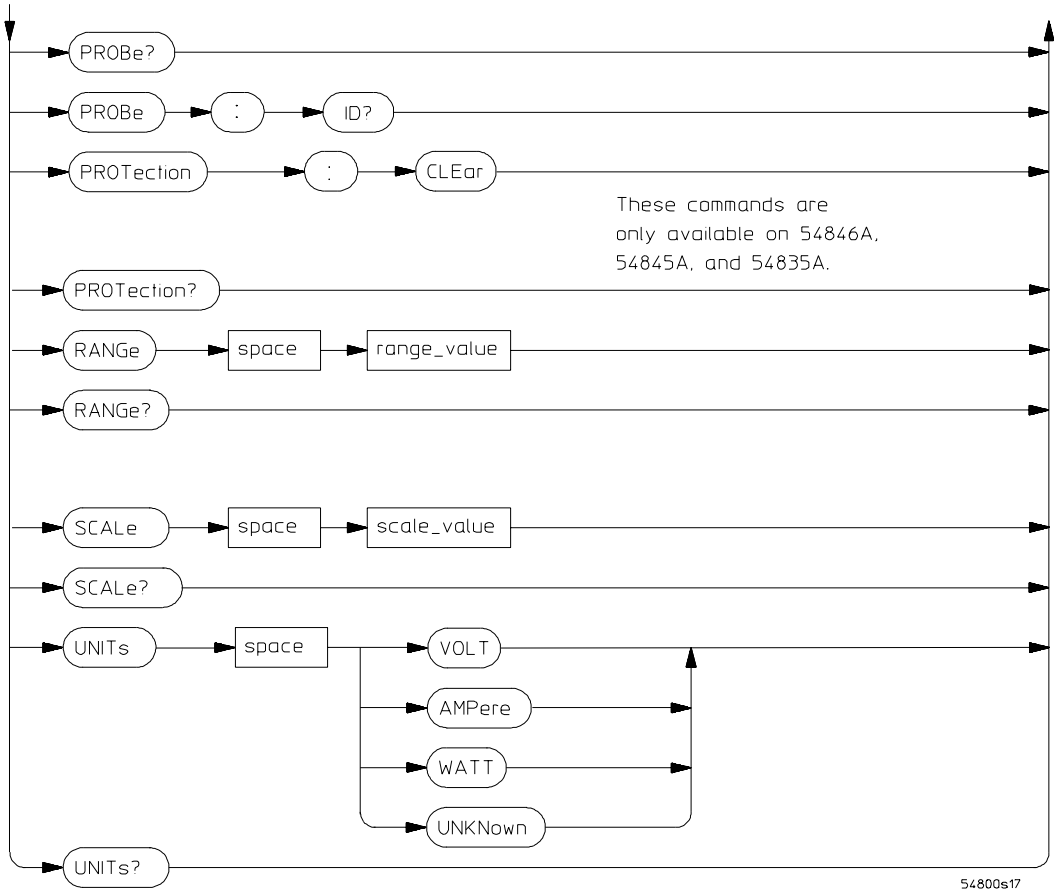

CHANnel Commands Syntax Diagram (Continued)

CHANnel Command Parameter	Description
attenuation_factor	A real number from 0.0001 to 1,000,000 (1.0E6), or -80 dB to 120 dB.
channel_number	An integer, 1 or 2, for 54810 and 54820. An integer, 1 through 4, for all other Infiniium Oscilloscope models.
gain_value	A real number.
offset_value	A real number.
position_value	A real number.
range_value	A real number.
scale_value	A real number.

CHANnel Command Parameter	Description
attenuation_factor	A real number from 0.0001 to 1,000,000 (1.0E6), or -80 dB to 120 dB.
skew_value	A real number in the range of -100 µseconds to 100 µseconds.

DISK Commands

Figure 2-12

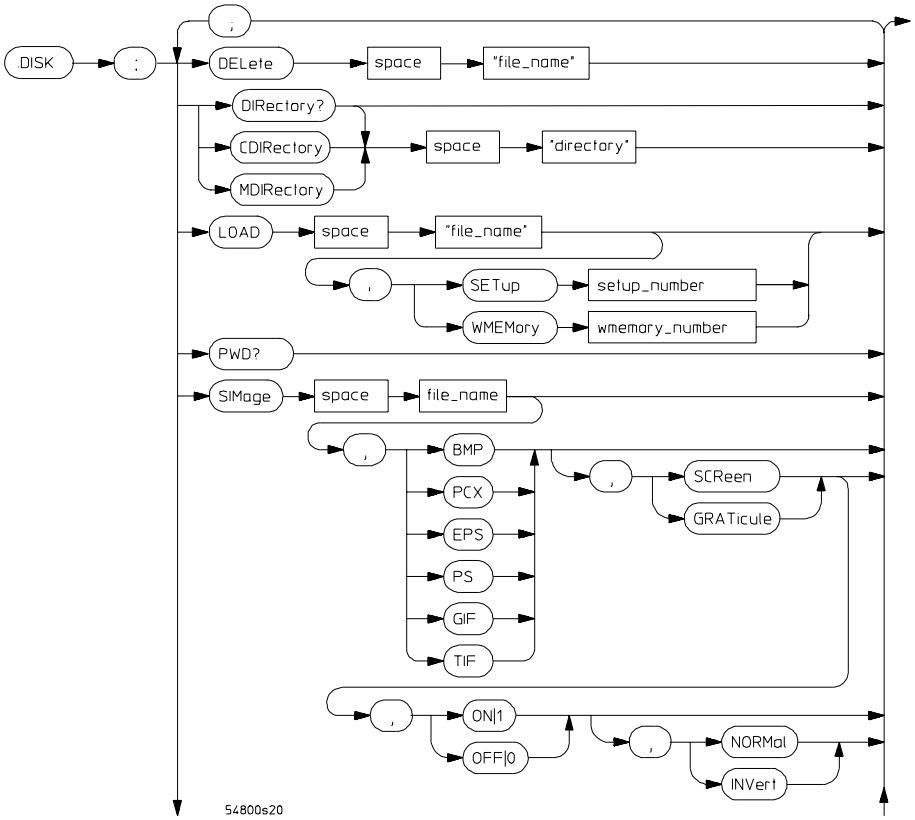

DISK Commands Syntax Diagram

Figure 2-13

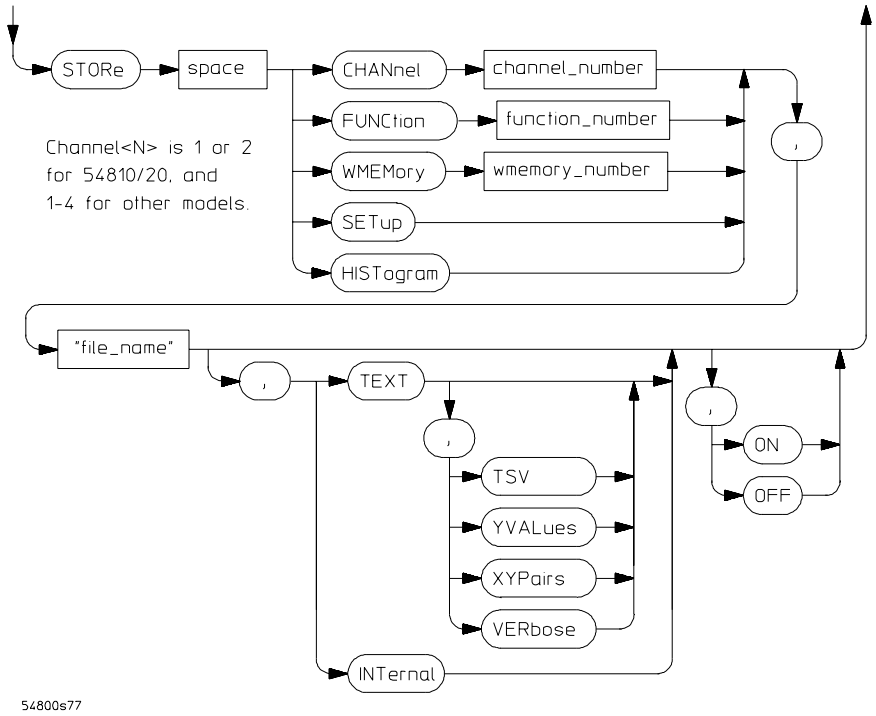

DISK Commands Syntax Diagram (Continued)

DISK Command Parameter	Description
channel_number	An integer, 1 or 2, for 54810 and 54820. An integer, 1 through 4, for all other Infiniium Oscilloscope models.
"directory"	A quoted string of characters.
"file_name"	A quoted string of characters.
function_number, wmemory_number	An integer, 1 through 4.
setup_number	An integer, 0 through 9.

DISPlay Commands

Figure 2-14

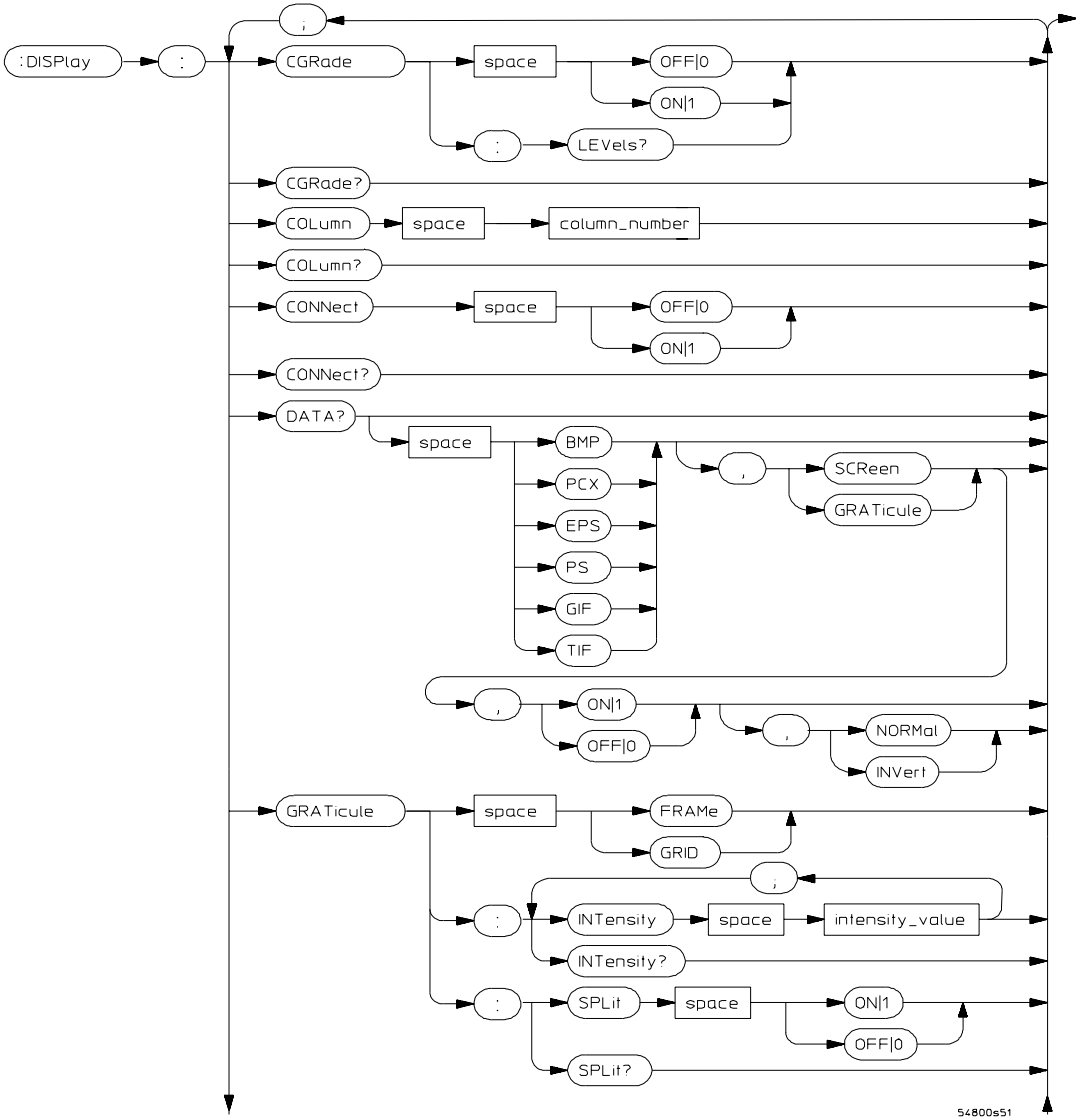

DISPlay Commands Syntax Diagram

Figure 2-15

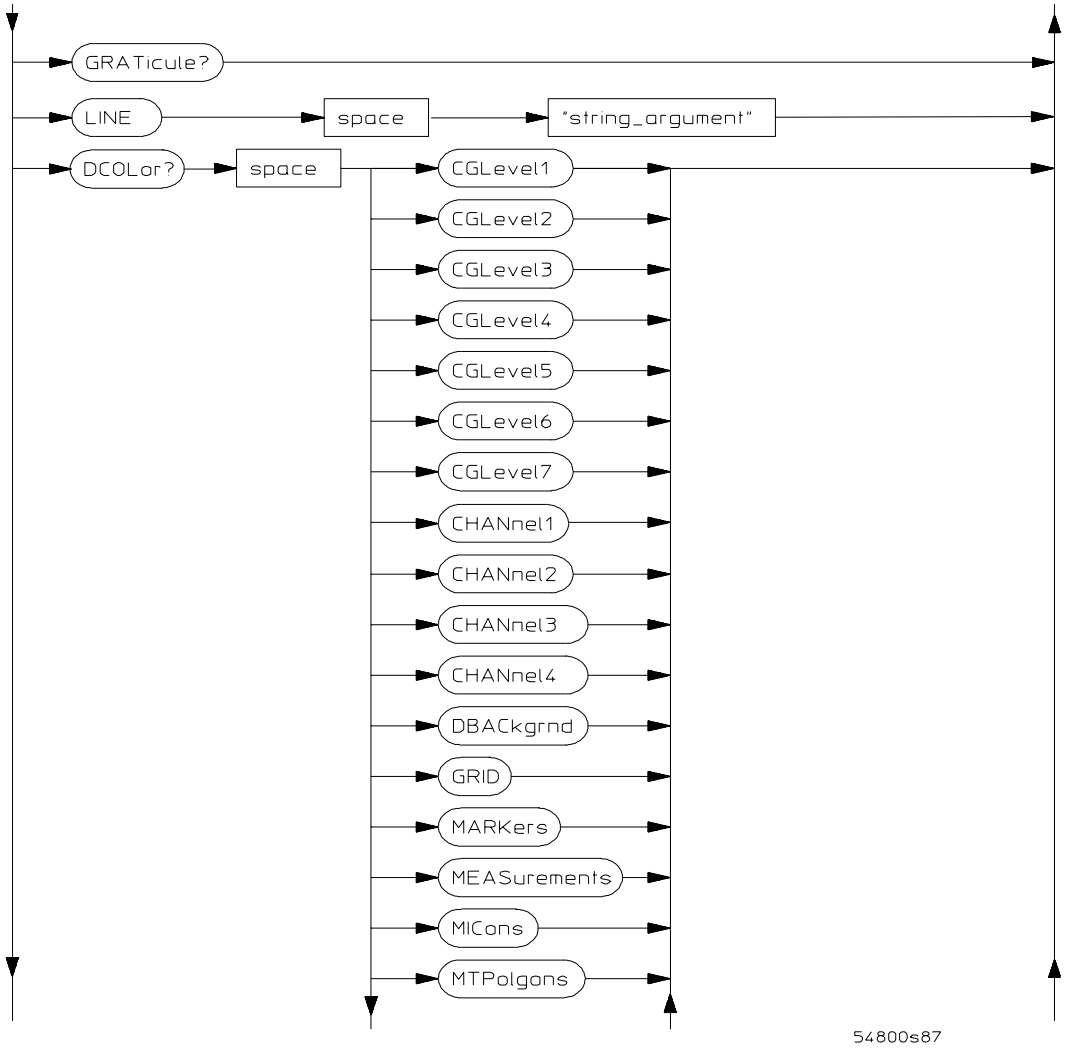

DISPlay Commands Syntax Diagram (Continued)

Figure 2-16

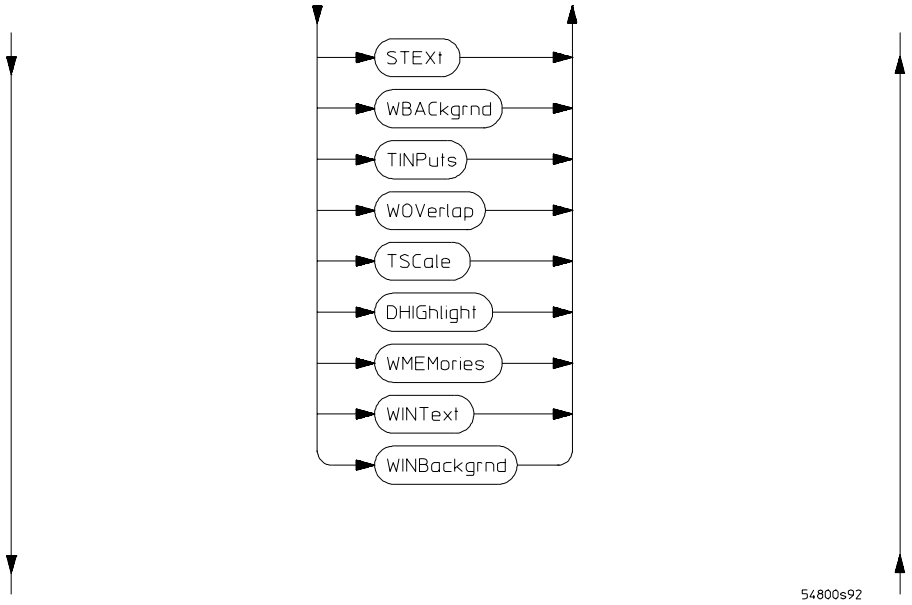

DISPlay Commands Syntax Diagram (Continued)

Figure 2-17

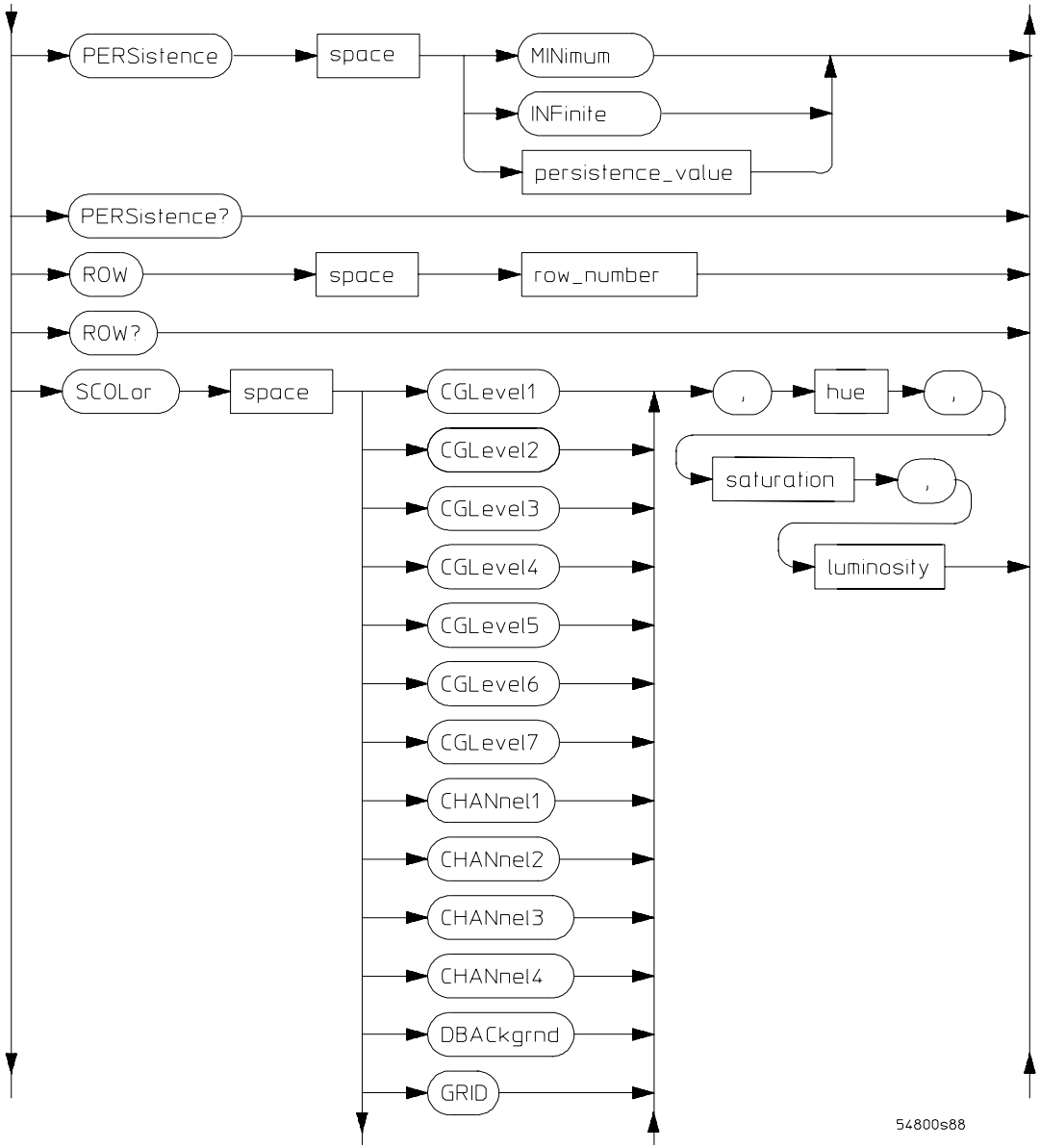

DISPlay Commands Syntax Diagram (Continued)

Figure 2-18

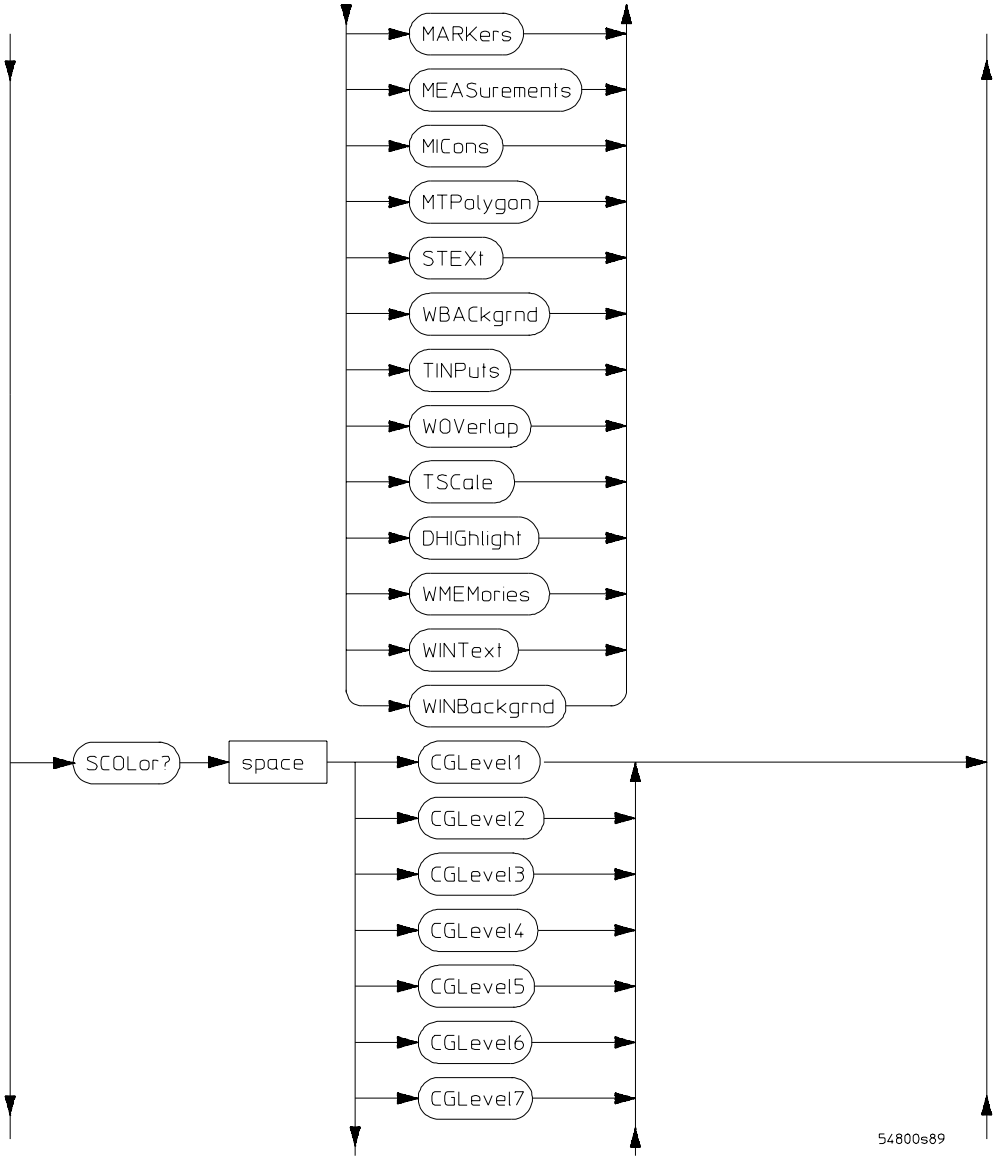

DISPlay Commands Syntax Diagram (Continued)

Figure 2-19

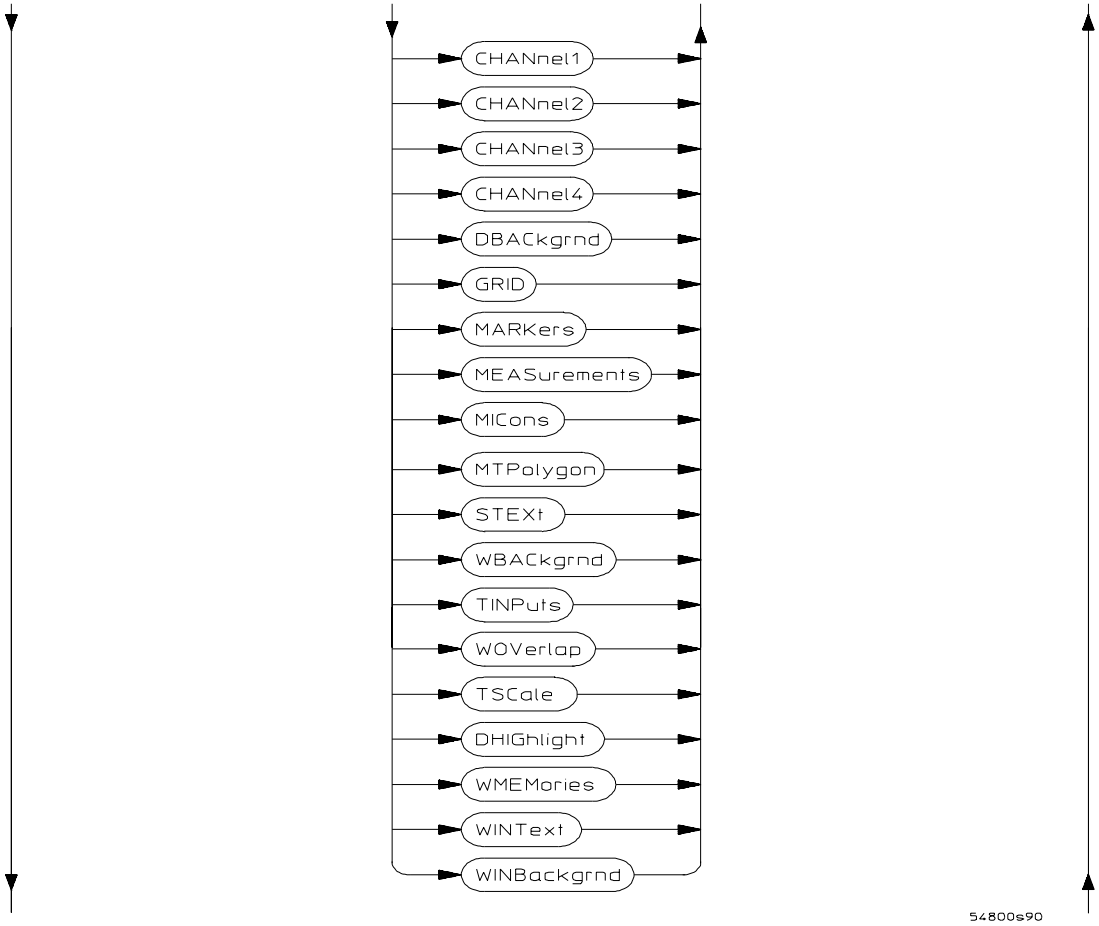

DISPlay Commands Syntax Diagram (Continued)

Figure 2-20

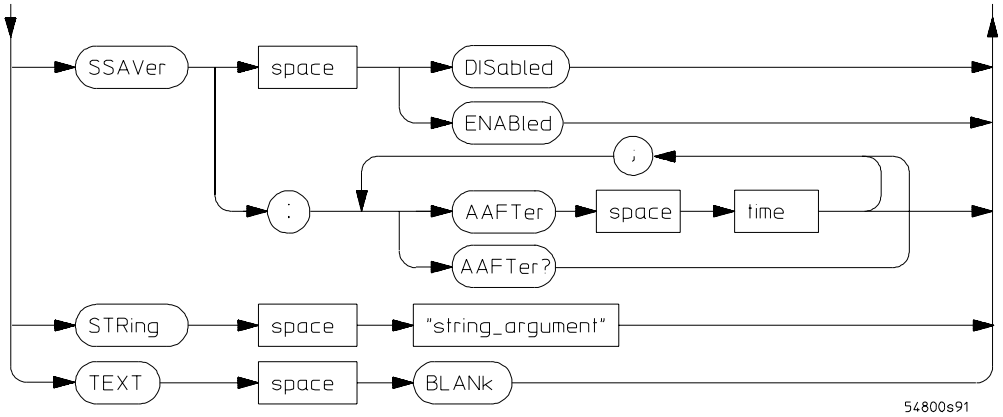

DISPlay Commands Syntax Diagram (Continued)

DISPlay Command Parameter	Description
color_name	The name of a display color. See SCOLor for a list of color names.
column_number	An integer, 0 to 81.
hue	An integer, 0 to 100.
intensity_value	An integer, 0 to 100.
luminosity	An integer, 0 to 100.
persistence_value	A real number, 0.1 to 40.
row_number	An integer, 0 to 23.
saturation	An integer, 0 to 100.
string_argument	Any series of ASCII characters enclosed in quotation marks.
time	An integer, 2 to 8.

EXTernal Channel Commands

External commands are only available in 2-channel Infiniium Oscilloscope models, including the 54810A and 54820A.

Figure 2-21

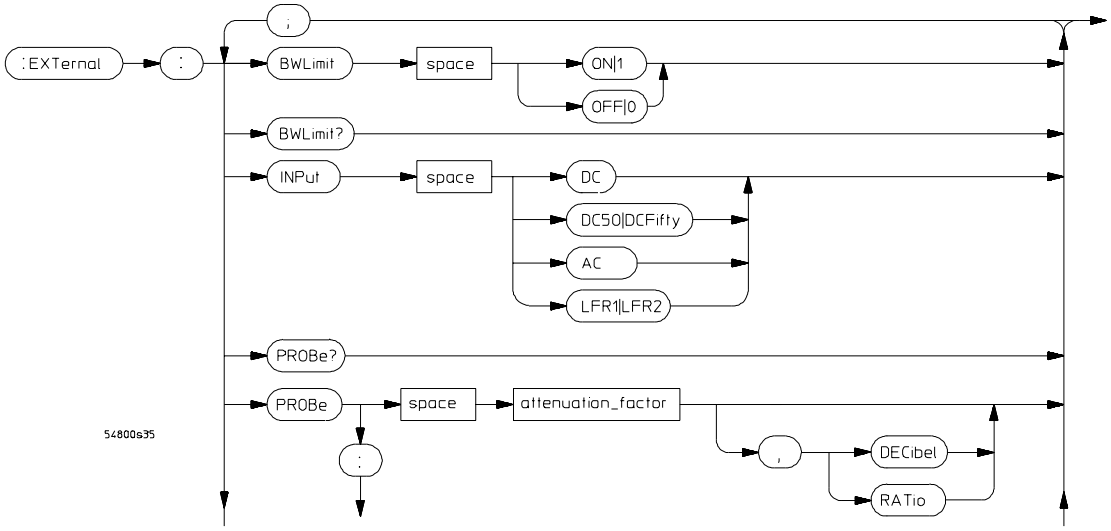

EXTernal Commands Syntax Diagram

Figure 2-22

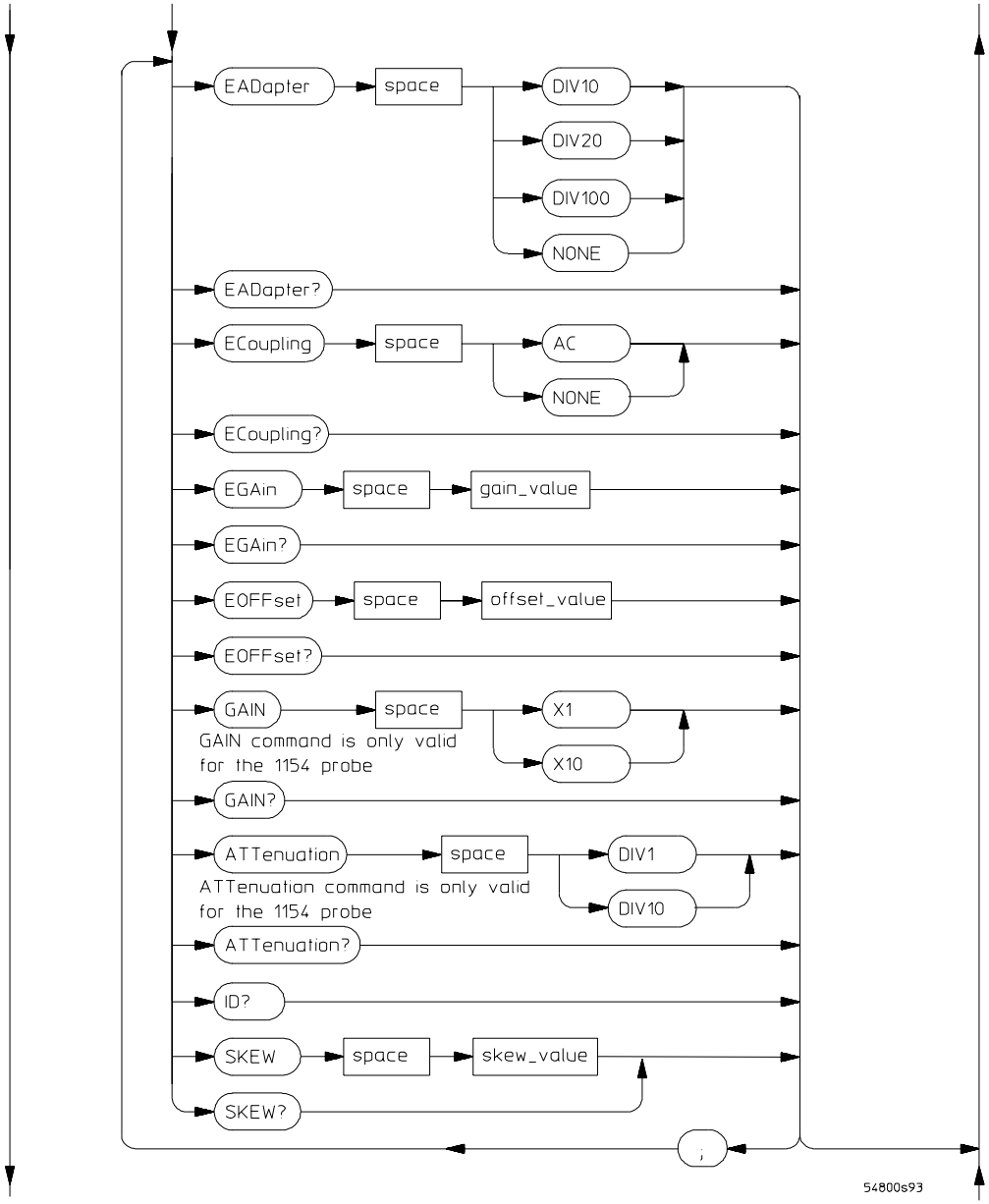

EXTernal Commands Syntax Diagram (Continued)

Figure 2-23

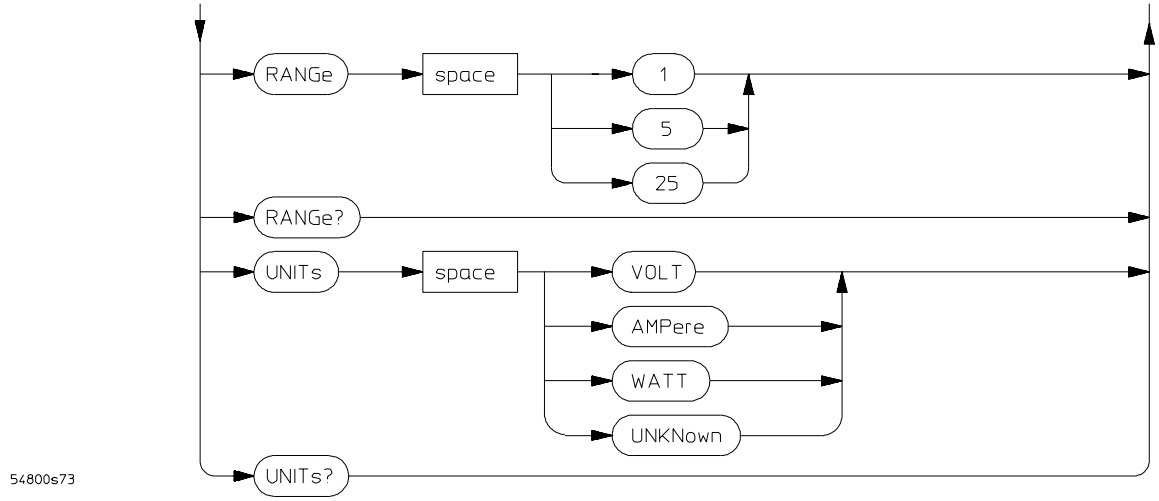

EXTernal Commands Syntax Diagram (Continued)

EXTernal Command Parameter	Description
attenuation_factor	A real number from 0.0001 to 1000000, and from -80 dB to 120 dB.
gain_value	A real number.
offset_value	A real number.
skew_value	A real number from -100E-6 to 100E6.

FUNCtion Commands

Figure 2-24

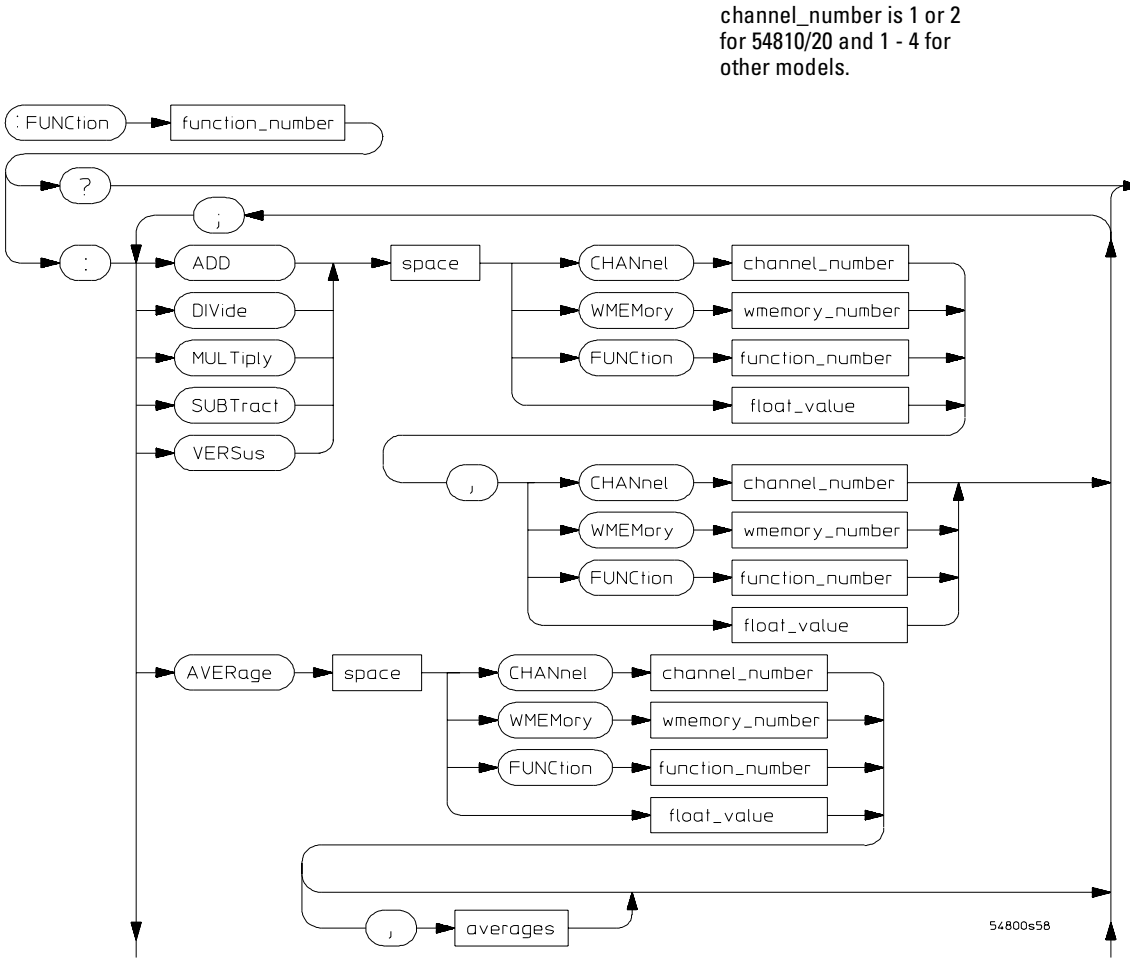

FUNCtion Commands Syntax Diagram

Figure 2-25

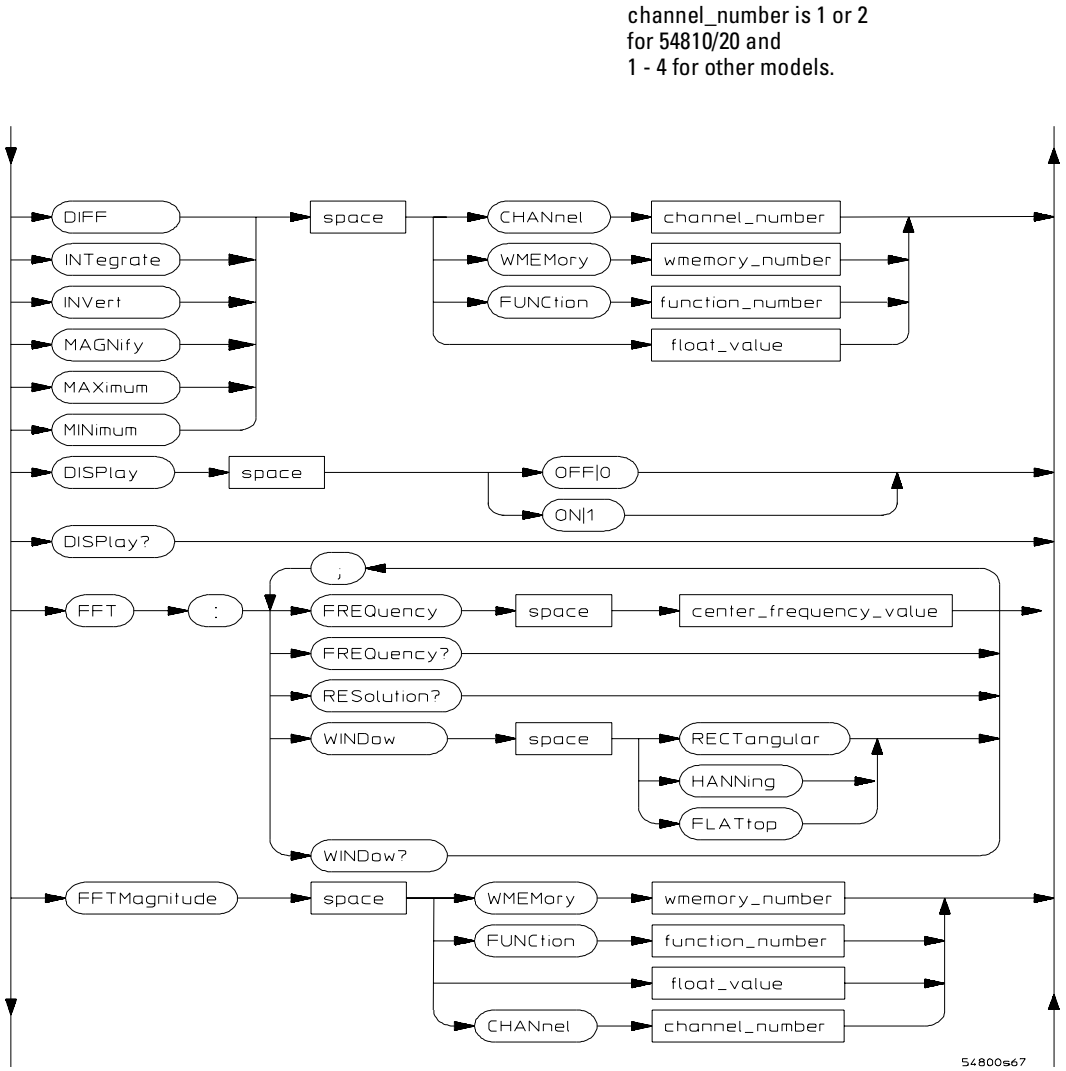

FUNCtion Commands Syntax Diagram (Continued)

Figure 2-26

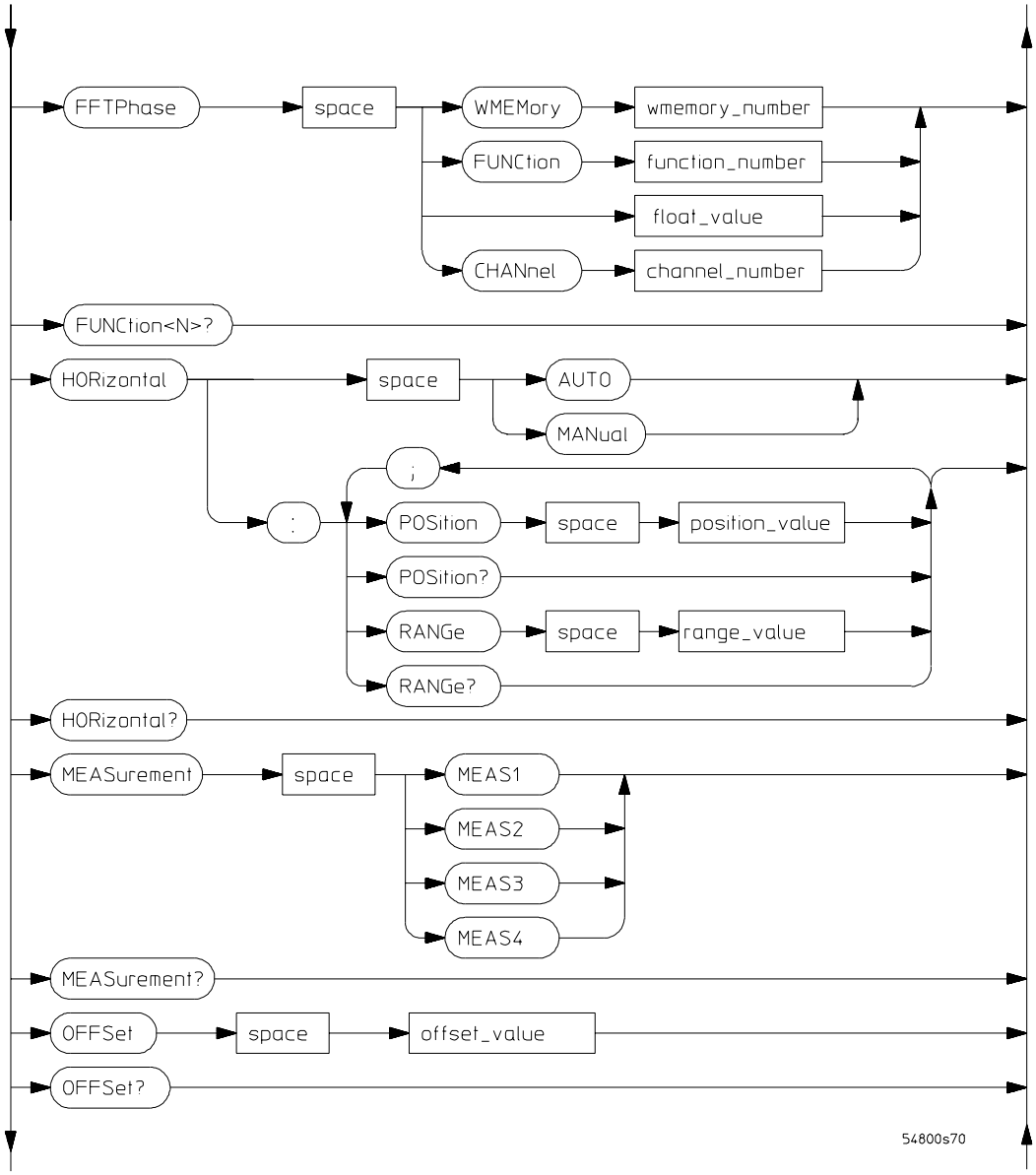

FUNCtion Commands Syntax Diagram (Continued)

Figure 2-27

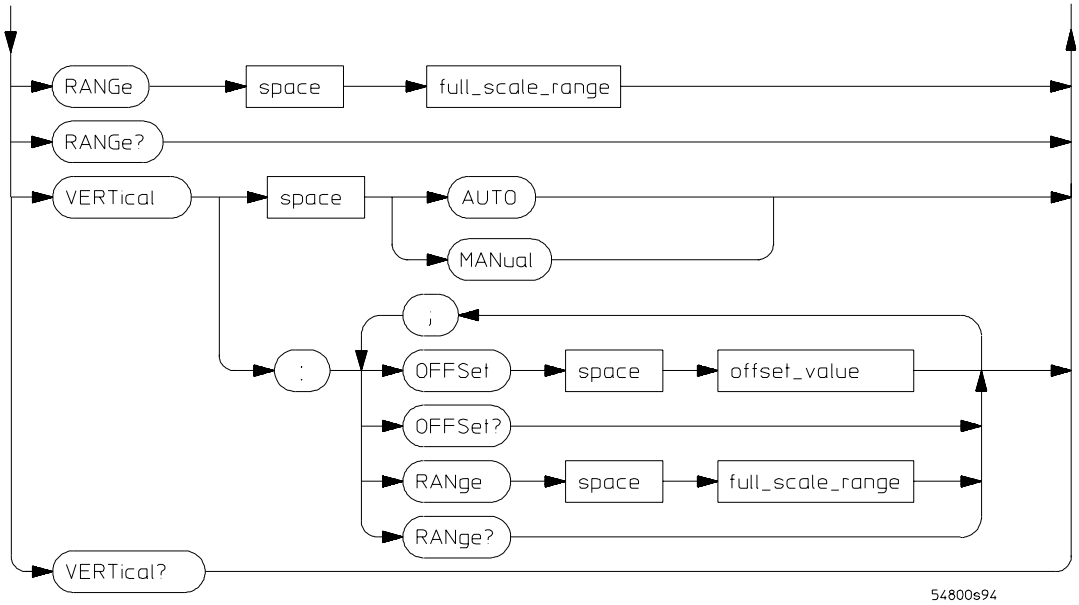

FUNCtion Commands Syntax Diagram (Continued)

FUNCtion Command Parameter	Description
center_frequency_value	A real number for frequency in Hertz, from -1E12 to 4E9.
channel_number	An integer, 1 or 2, for 54810 and 54820. An integer, 1 through 4, for all other Infiniium Oscilloscope models.
function_number, wmemory_number	An integer, 1 through 4.
float_value	A real number from -1E6 to 1E6.
full_scale_range	A real number for time or voltage range, from 10E-18 to 1E15.
offset_value	A real number for vertical offset in the currently selected Y-axis units (normally volts).
position_value	A real number for time of horizontal position, from -1E12 to 4E9.
range_value	A real number for time of horizontal scale, from 1E-11 to 5E12. For :HORizontal:RANGe, this is the width of the screen in current x-axis units (usually seconds).

HARDcopy Commands

Figure 2-28

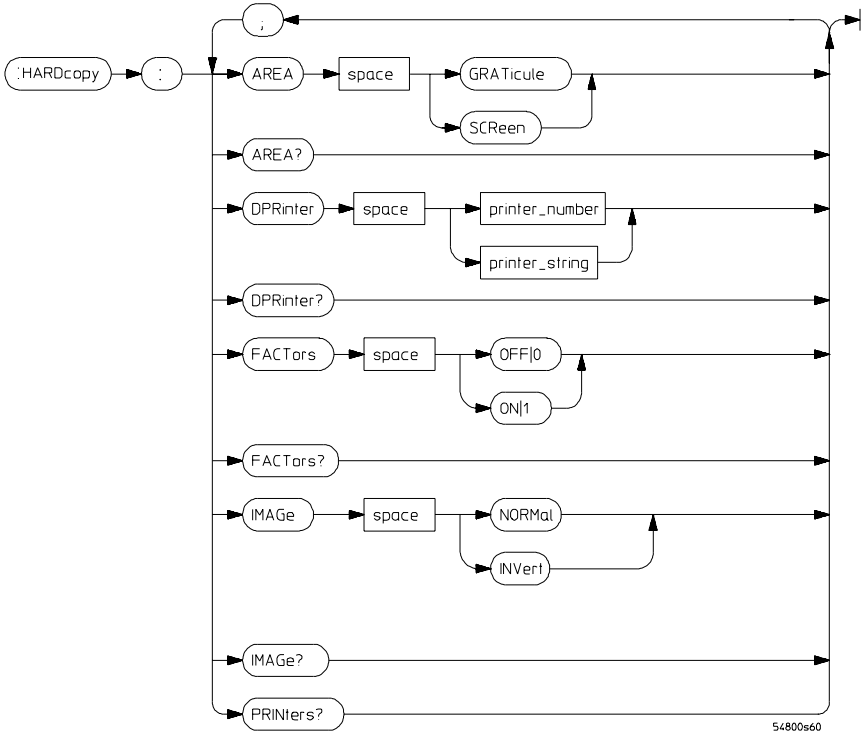

HARDcopy Commands Syntax Diagram

HARDcopy Command Parameter	Description
printer_number	An integer.
printer_string	A string representing the printer name.

HISTogram Commands

Figure 2-29

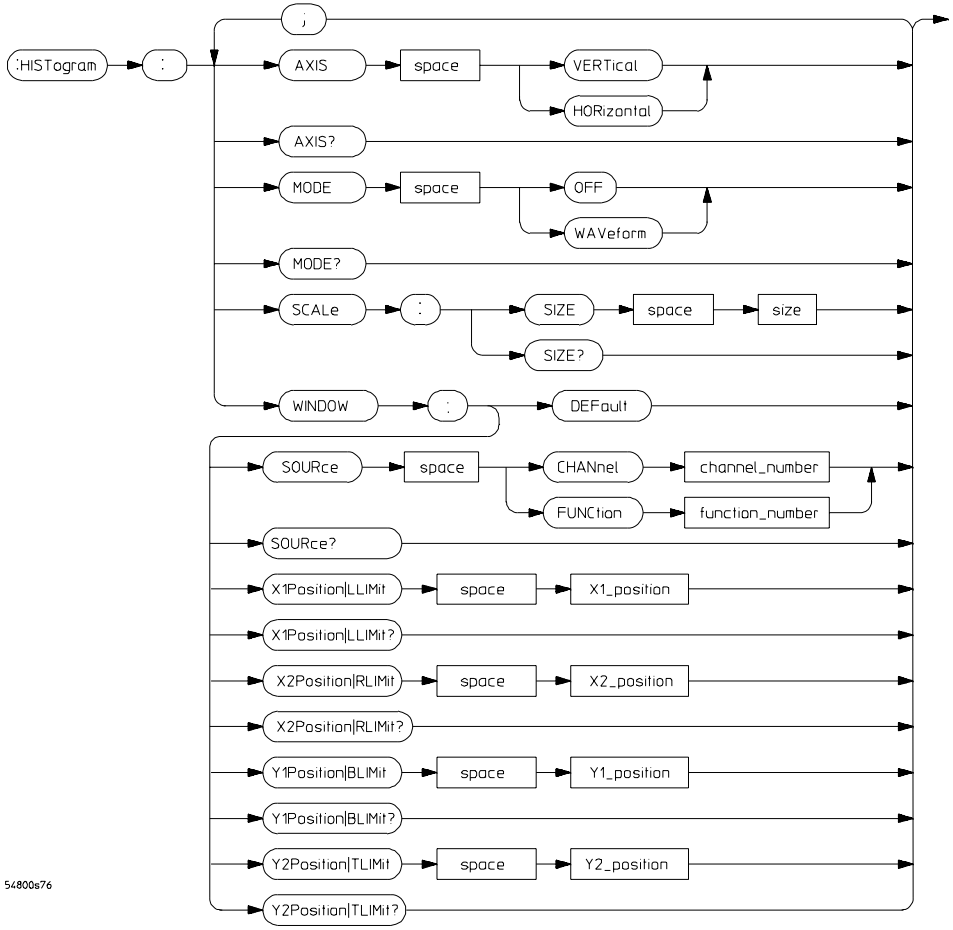

HISTogram Commands Syntax Diagram

HISTogram Command Parameter	Description
channel_number	An integer, 1 or 2, for 54810 and 54820. An integer, 1 through 4, for all other Infiniium Oscilloscope models.
function_number	An integer, 1 through 4.
size	The size is from 1.0 to 8.0 for the horizontal mode and from 1.0 to 10.0 for the vertical mode.
X1_position	A real number for the X1 marker time value, in seconds.
X2_position	A real number for the X2 marker time value, in seconds.
Y1_position	A real number for the current measurement unit value (volts, amps, watts, etc.).
Y2_position	A real number for the current measurement unit value (volts, amps, watts, etc.).

MARKer Commands

Figure 2-30

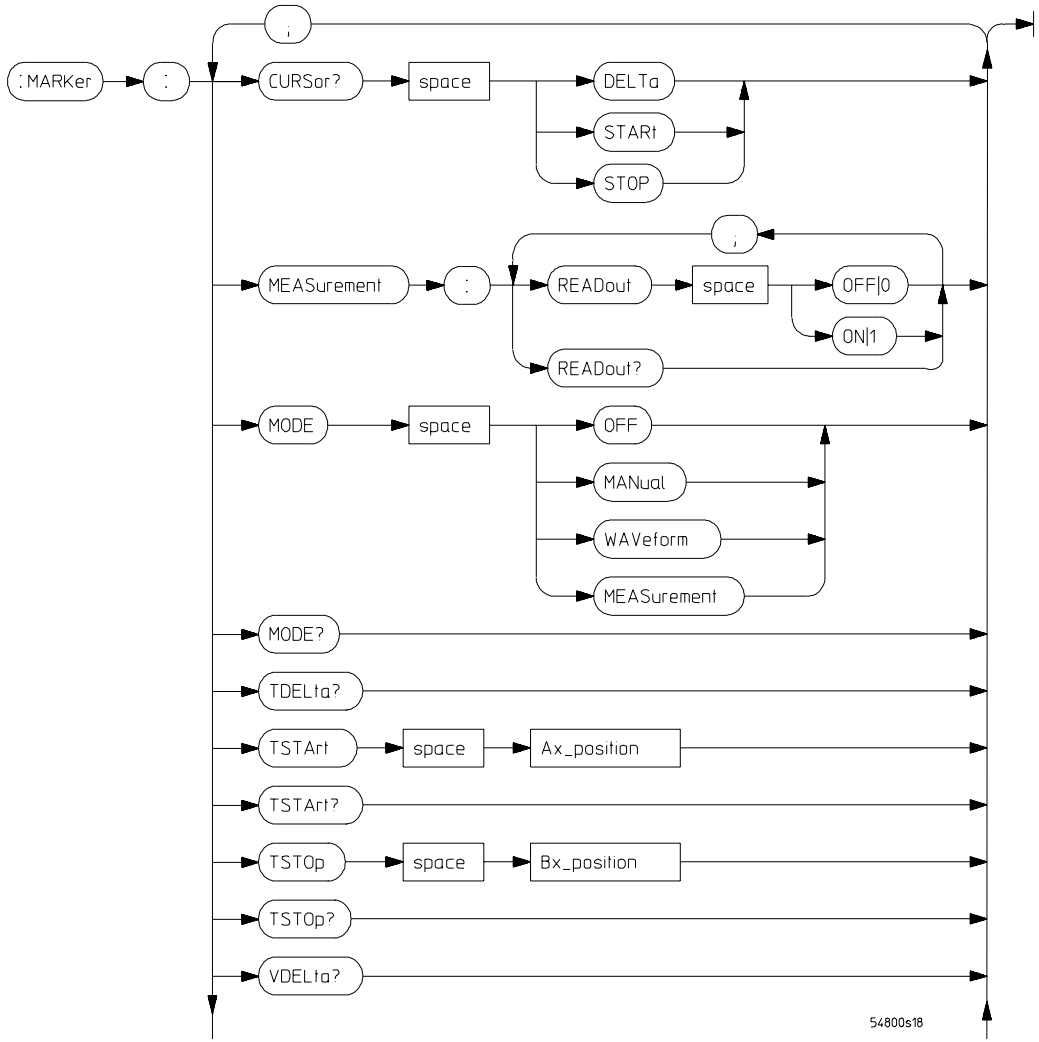

MARKer Commands Syntax Diagram

Figure 2-31

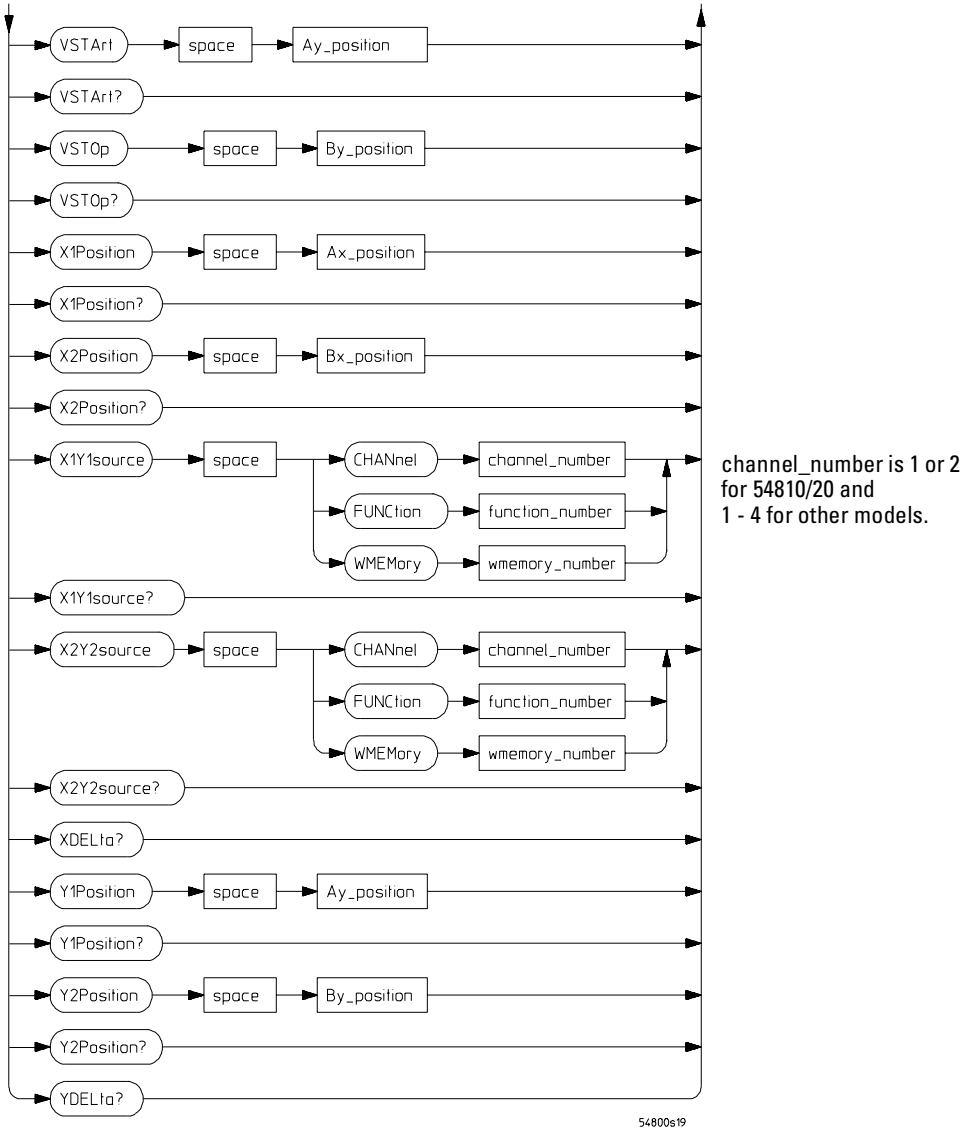

MARKer Commands Syntax Diagram (Continued)

MARKer Command Parameter	Description
Ax_position	A real number for the Ax marker time value, in seconds.
Bx_position	A real number for the Bx marker time value, in seconds.
Ay_position	A real number for the current measurement unit value (volts, amps, watts, etc.).
By_position	A real number for the current measurement unit value (volts, amps, watts, etc.).
channel_number	An integer, 1 or 2, for 54810 and 54820. An integer, 1 through 4, for all other Infiniium Oscilloscope models.
function_number, wmemory_number	An integer, 1 through 4.

MEASure Commands

Figure 2-32

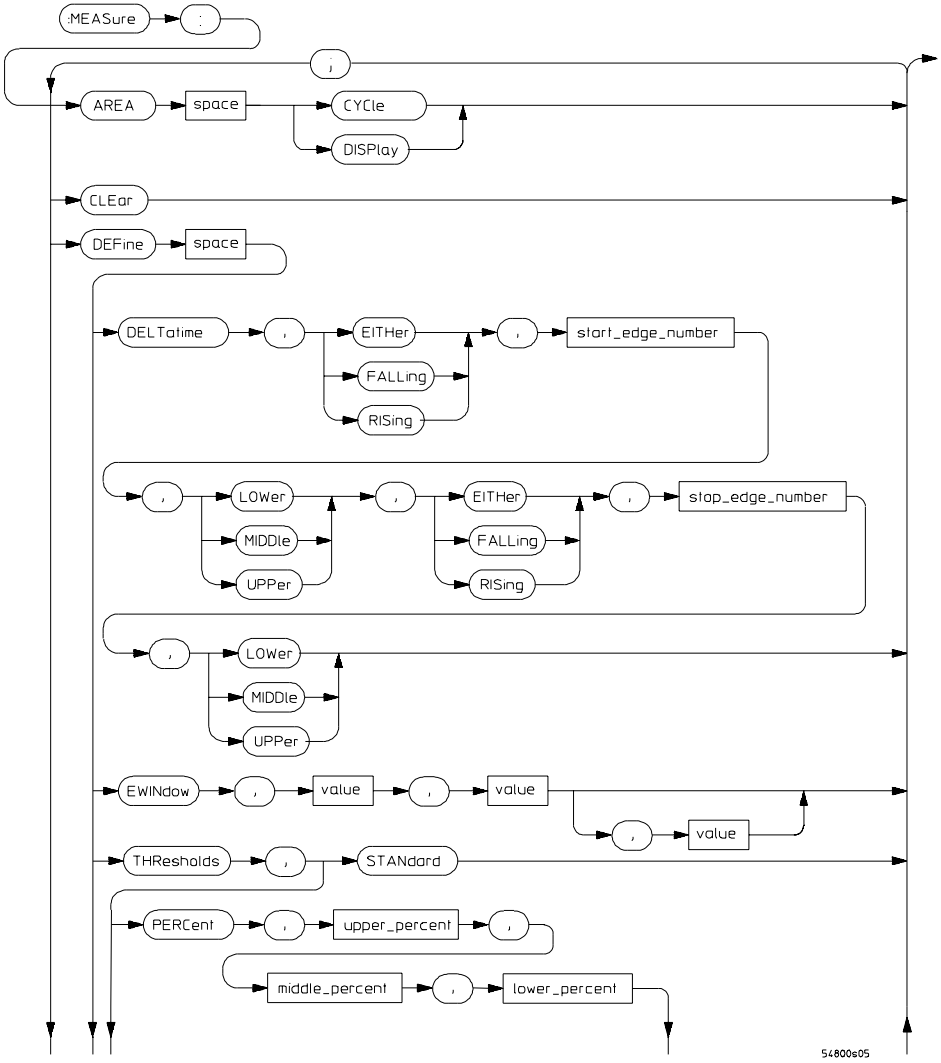

MEASure Commands Syntax Diagram

Figure 2-33

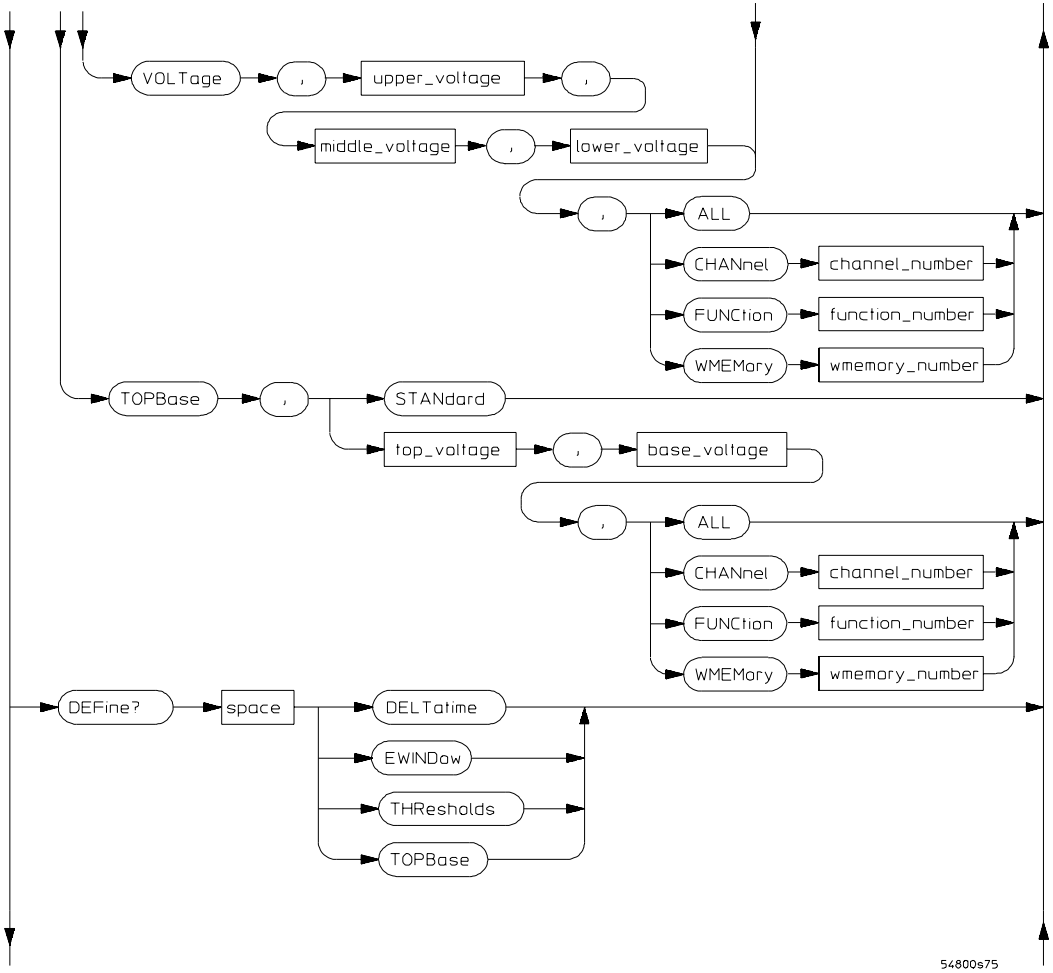

MEASure Commands Syntax Diagram (Continued)

Figure 2-34

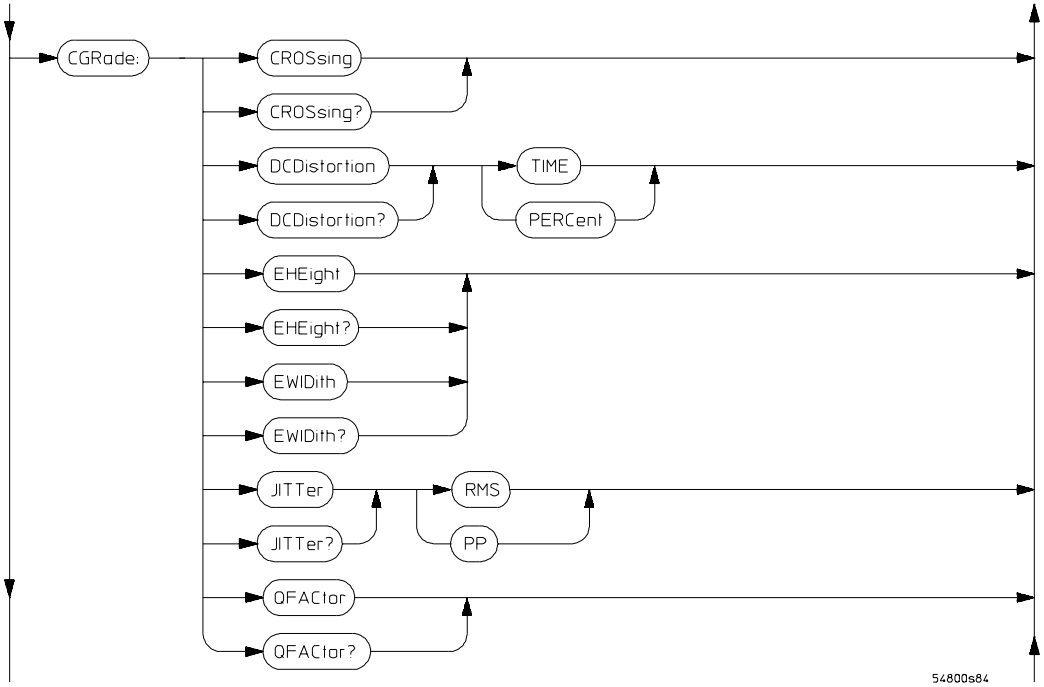

MEASure Commands Syntax Diagram (Continued)

Figure 2-35

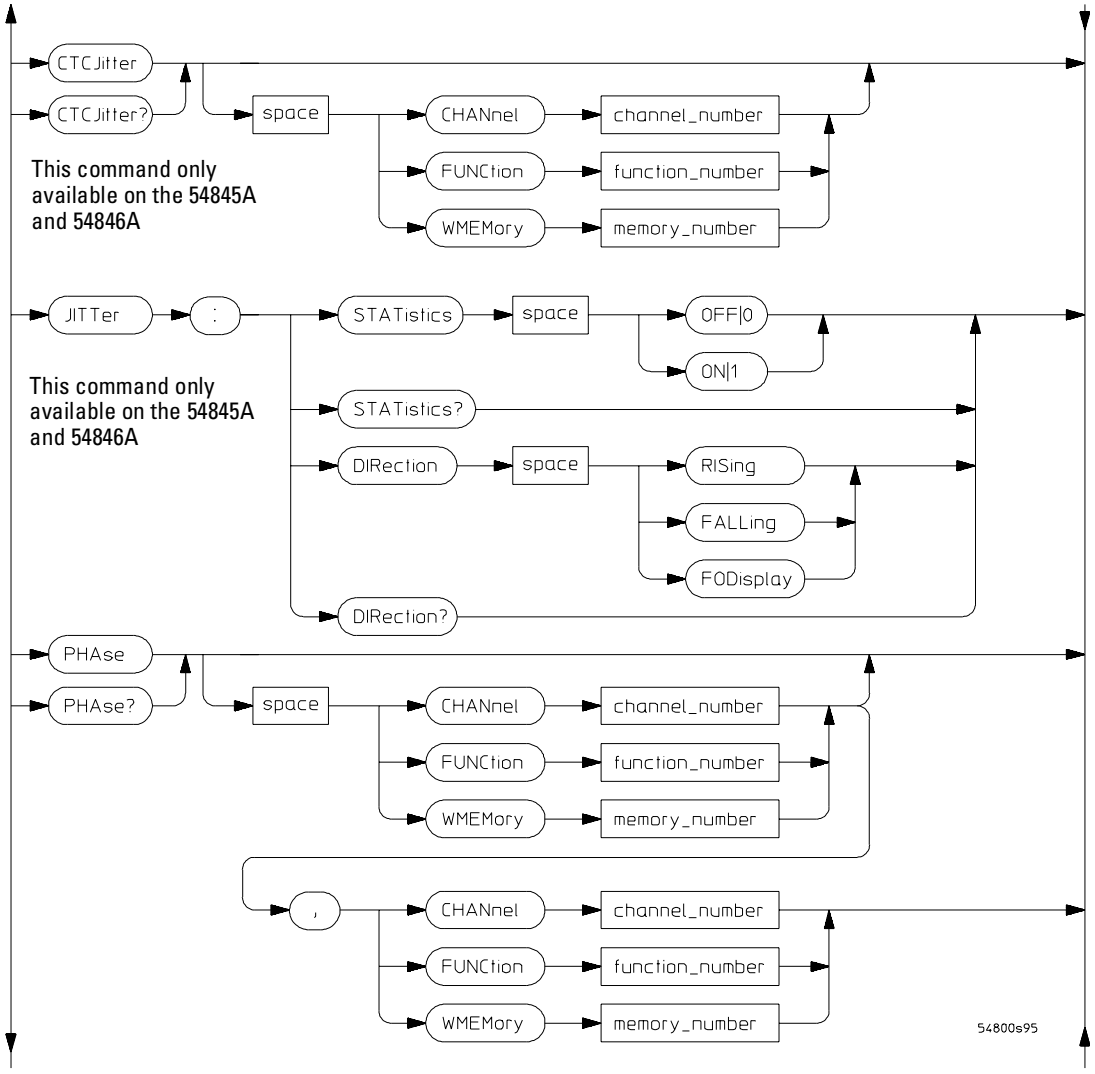

MEASure Commands Syntax Diagram (Continued)

Figure 2-36

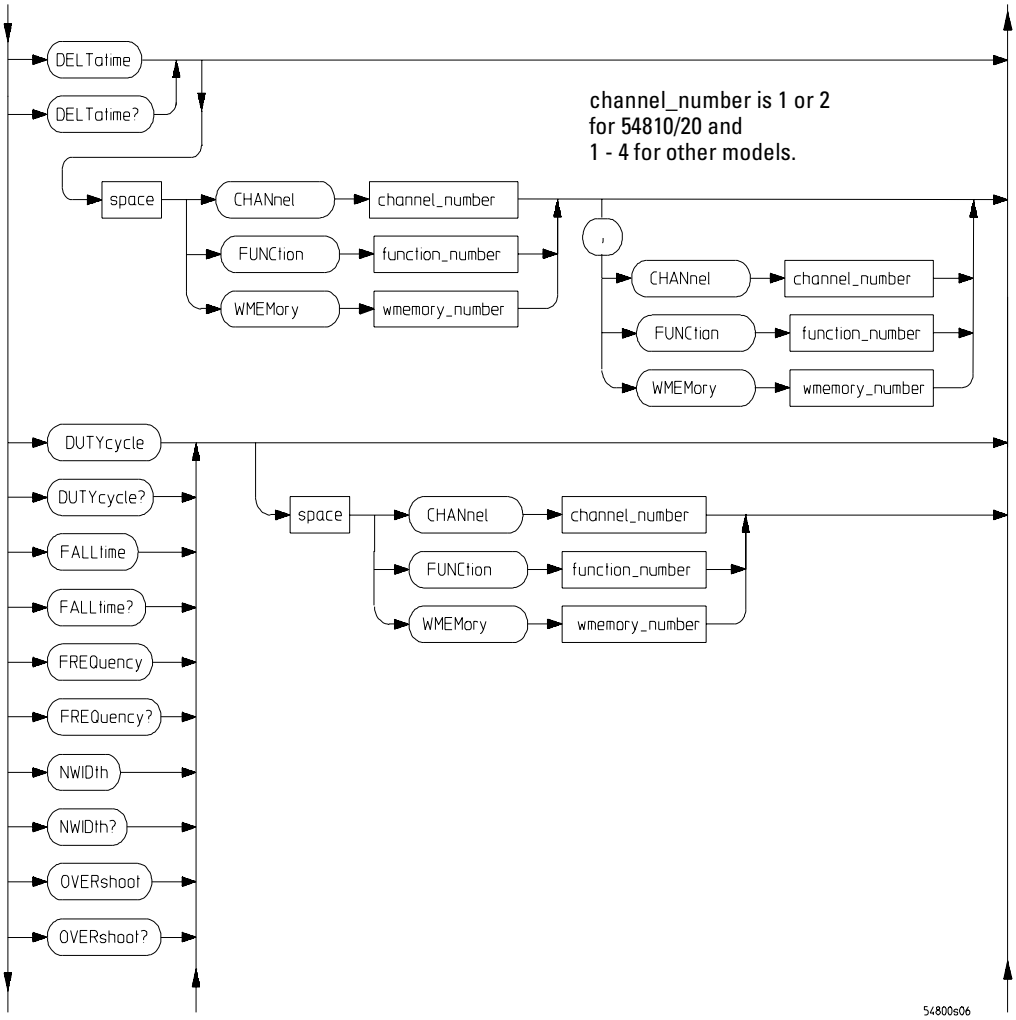

MEASure Commands Syntax Diagram (Continued)

Figure 2-37

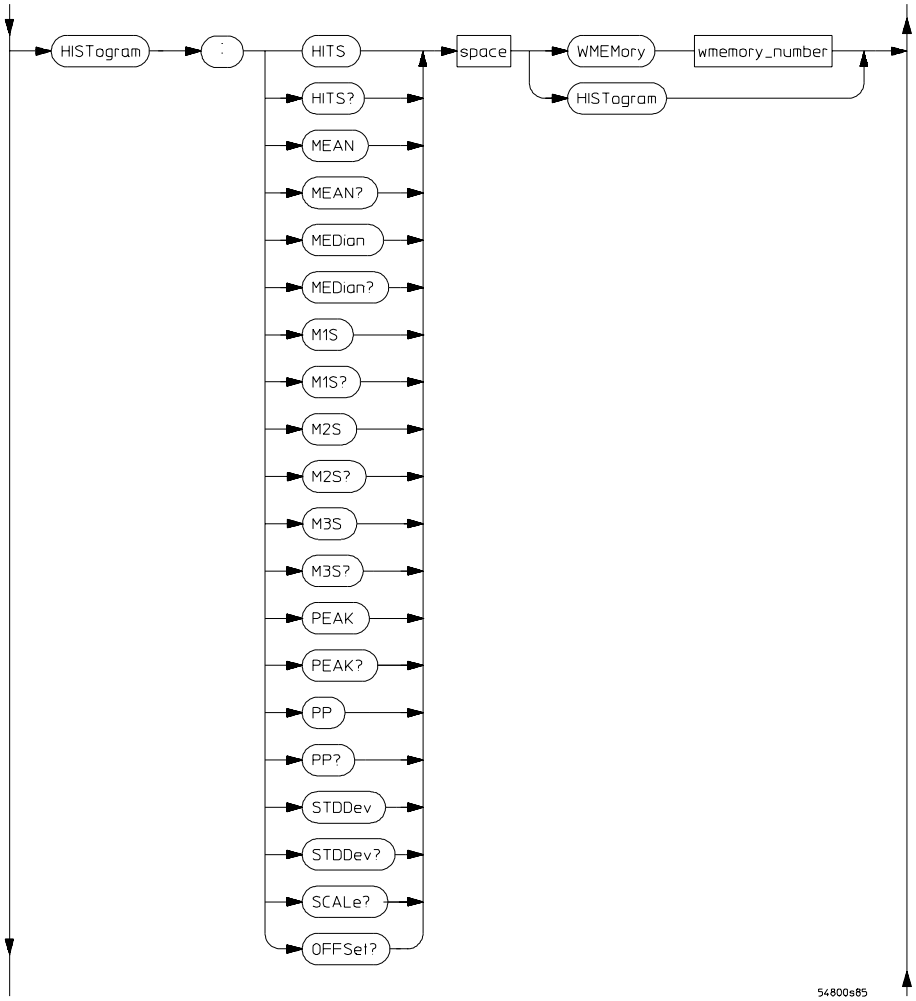

MEASure Commands Syntax Diagram (Continued)

Figure 2-38

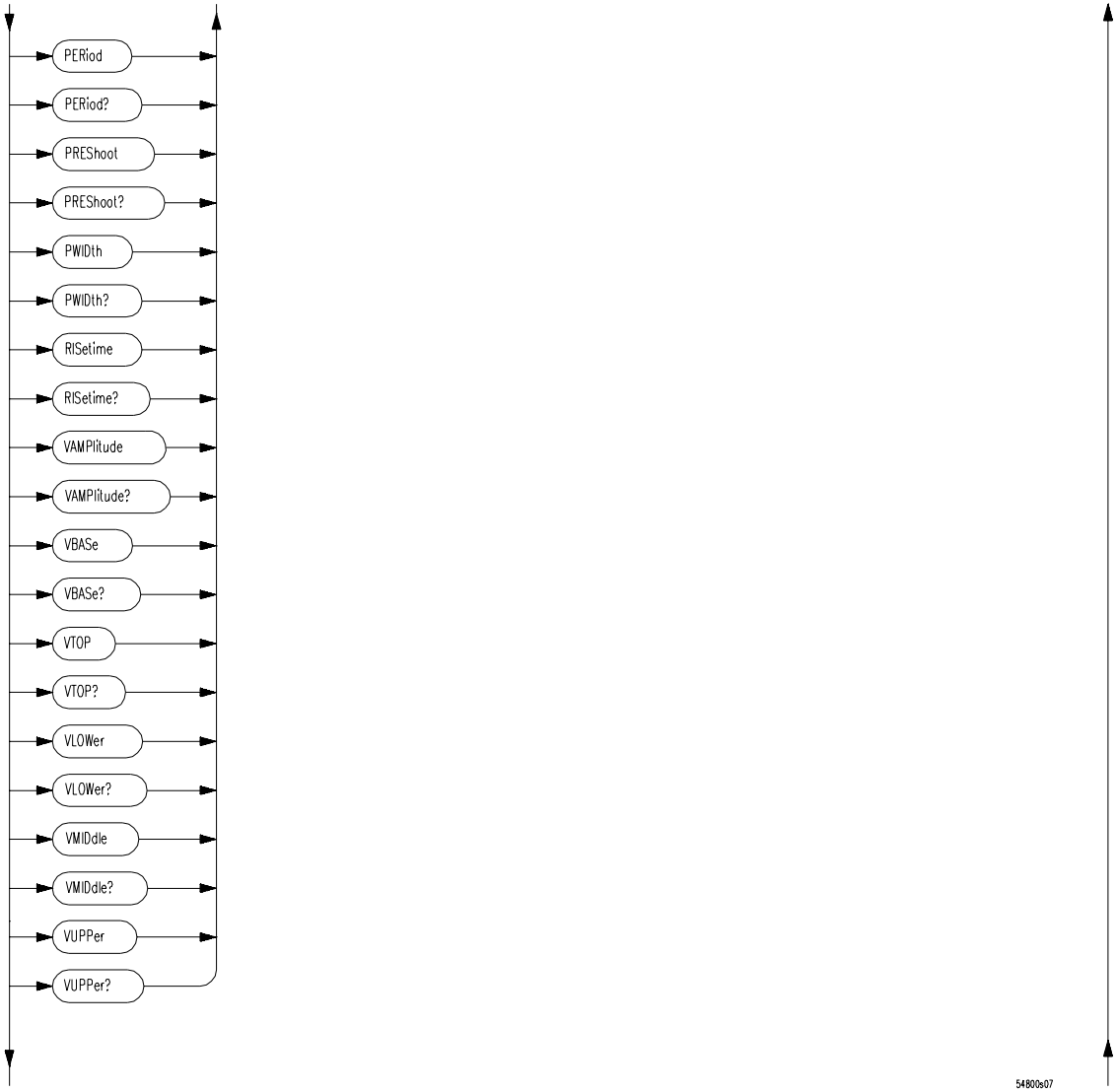

MEASure Commands Syntax Diagram (Continued)

Figure 2-39

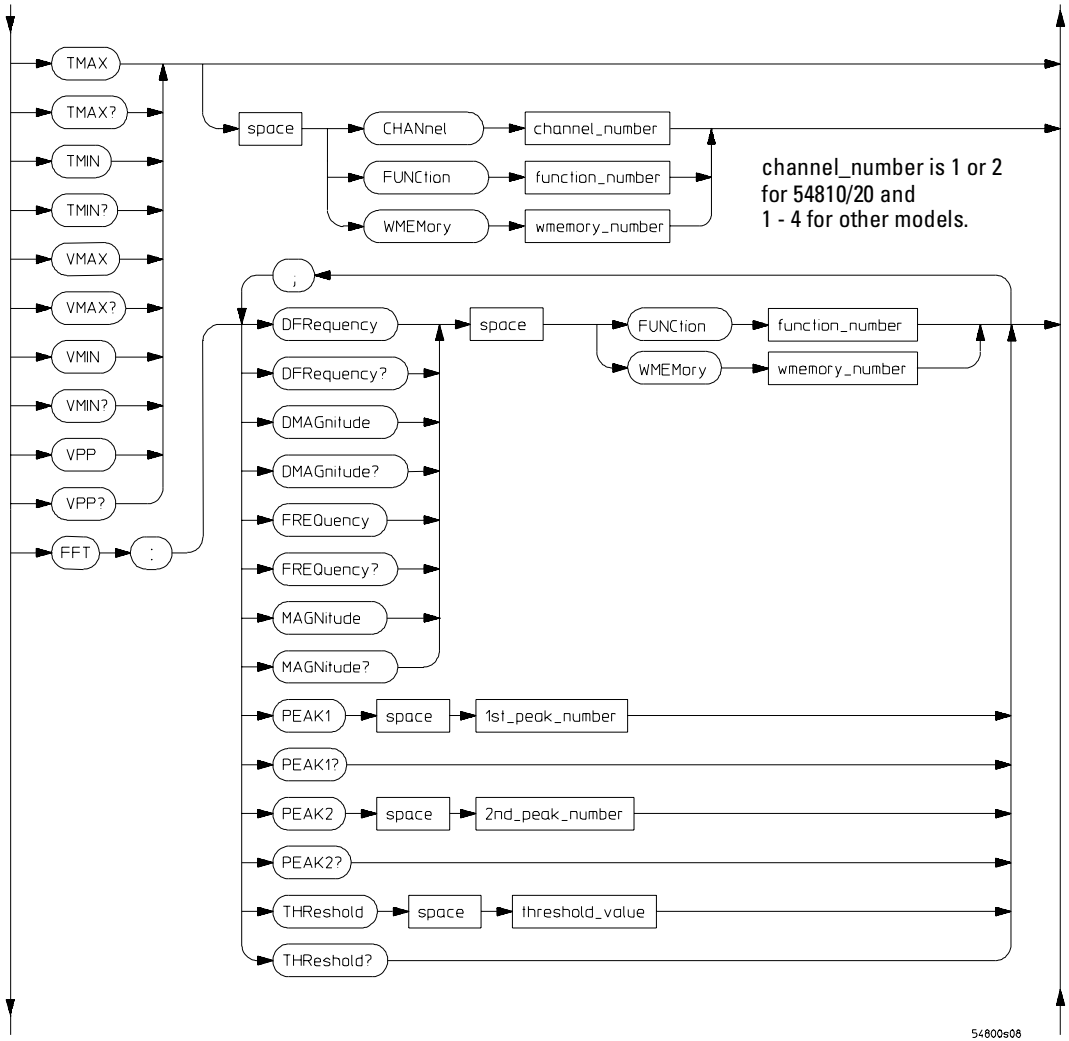

MEASure Commands Syntax Diagram (Continued)

Figure 2-40

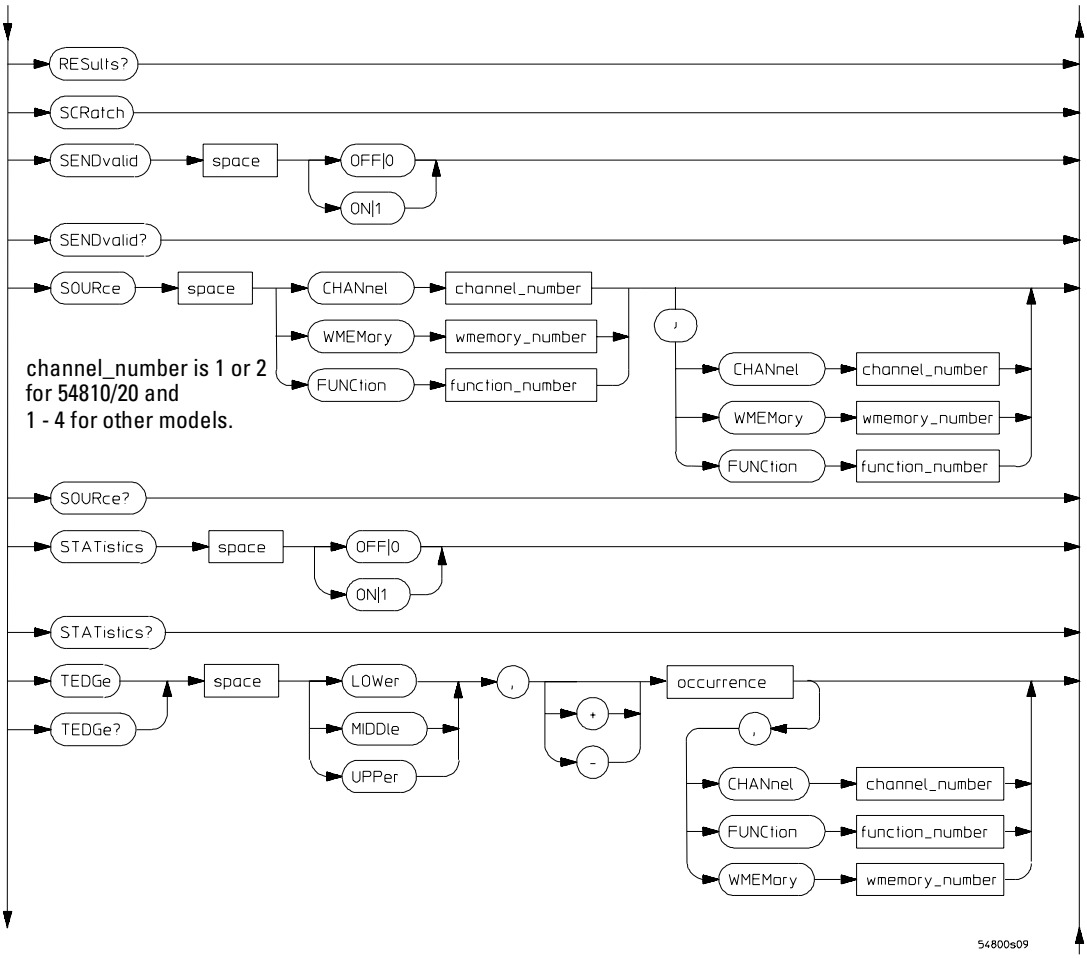

MEASure Commands Syntax Diagram (Continued)

Figure 2-41

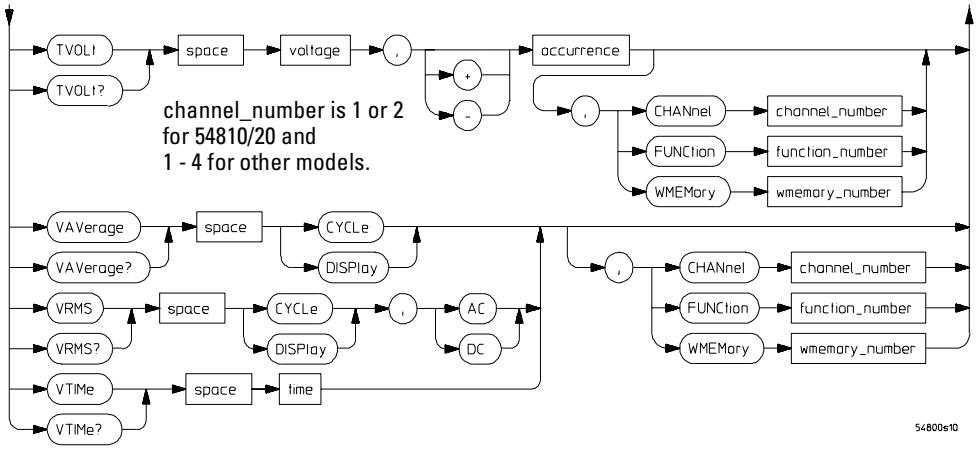

MEASure Commands Syntax Diagram (Continued)

MEASure Command Parameter	Description
1st_peak_number	An integer from 1 to 100,000 used to specify the number of the first peak.
2nd_peak_number	An integer from 1 to 100,000 used to specify the number of the second peak.
channel_number	An integer, 1 or 2, for 54810 and 54820. An integer, 1 through 4, for all other Infiniium Oscilloscope models.
function_number, wmemory_number	An integer, 1 to 4.
edge_direction	RISing, FALLing, or EITHer.
edge_number	An integer, 1 to 65534.
edge_position	MIDDle, UPPer, or LOWer.
occurrence	An integer, 1 to 65534.
percent	An integer, -25 to 125.
slope	+ or -.
source	CHANnel, FUNCtion, FFT, or WMEMory number.
start_edge_number	An integer, 1 to 65534.
stop_edge_number	An integer, 1 to 65534.
threshold_value	A real number specifying the threshold for peaks.
time	A real number specifying time.
top_voltage, base_voltage	A real number.
upper_percent, middle_percent, lower_percent	An integer from -25 to 125.
upper_voltage, middle_voltage, lower_voltage	A real number.
voltage	A real number specifying voltage.

Mask TESt Commands

Figure 2-42

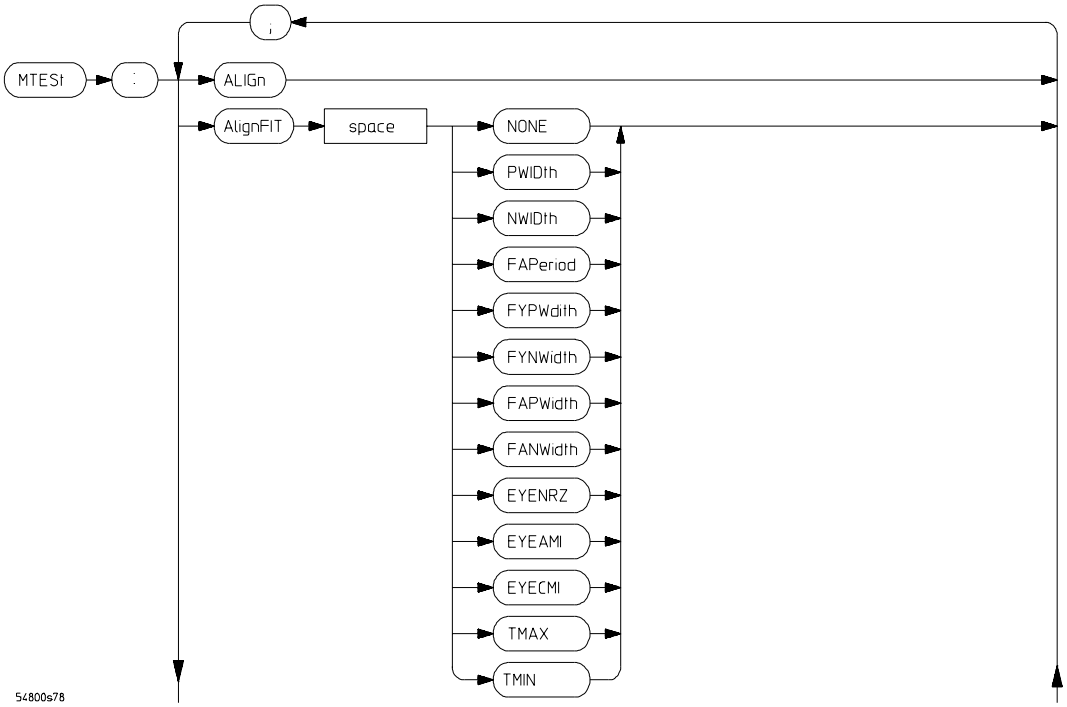

Mask TESt Commands Syntax Diagram

Figure 2-43

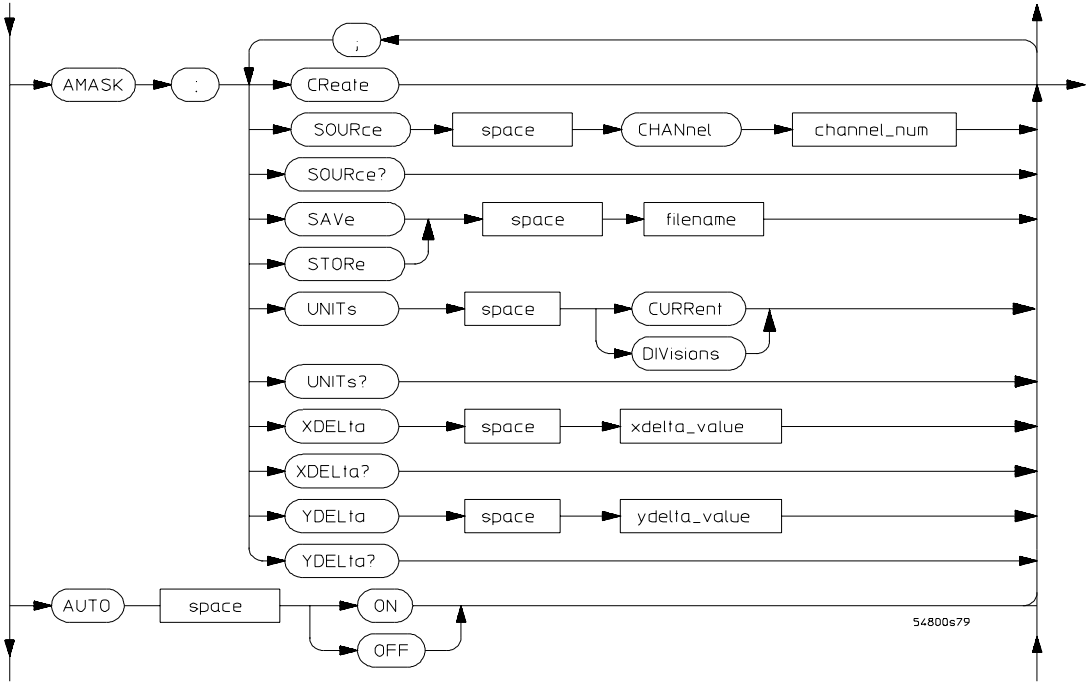

Mask TESt Commands Syntax Diagram (Continued)

Figure 2-44

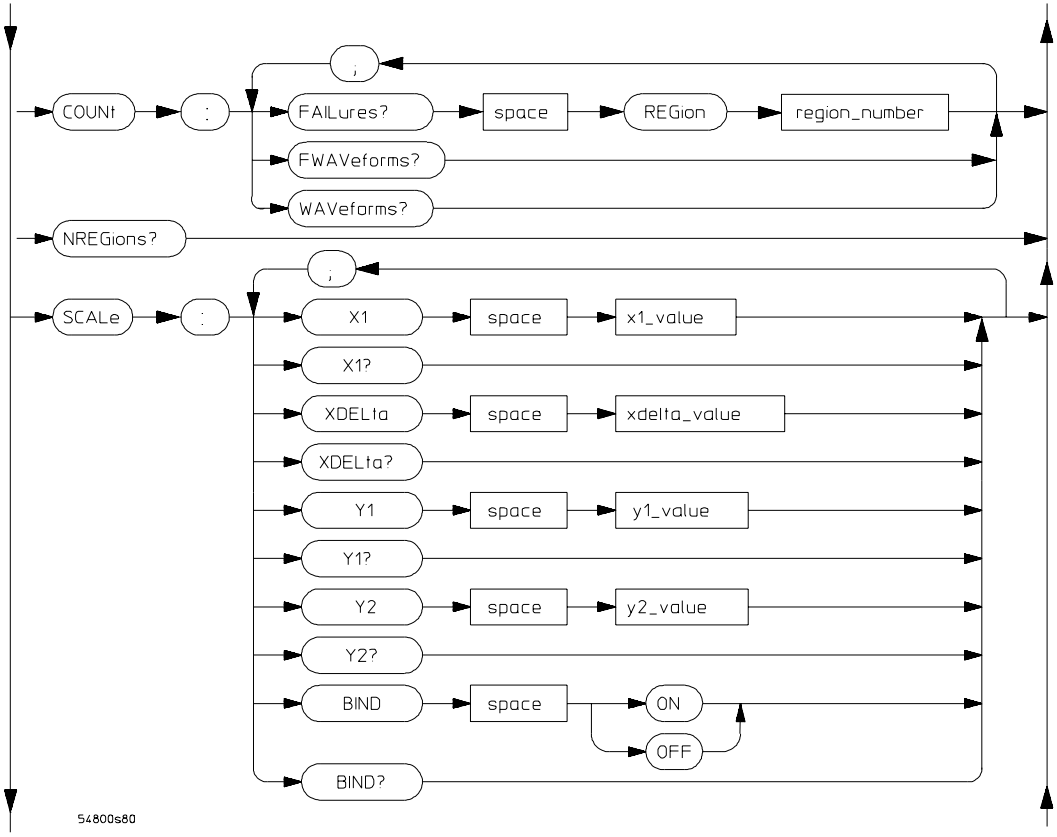

Mask TESt Commands Syntax Diagram (Continued)

Figure 2-45

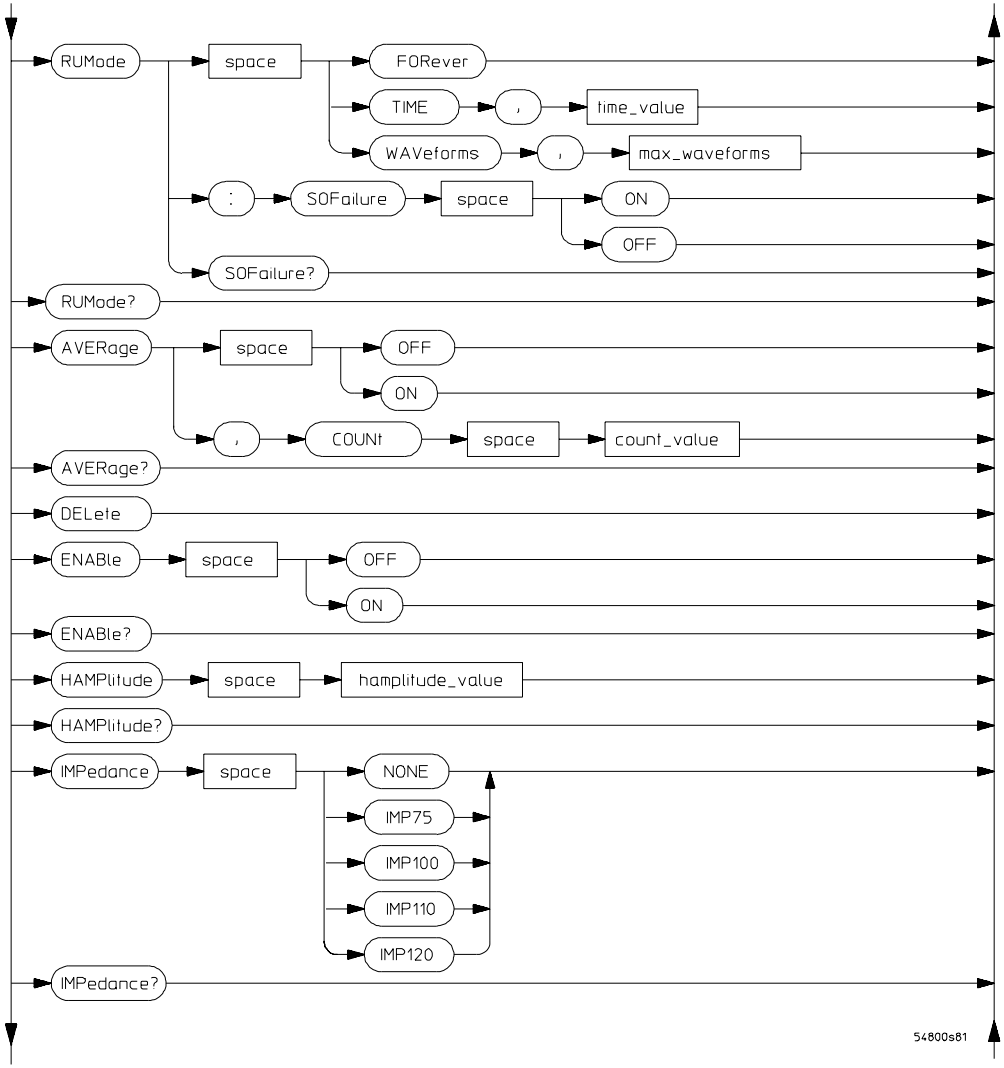

Mask TESt Commands Syntax Diagram (Continued)

Figure 2-46

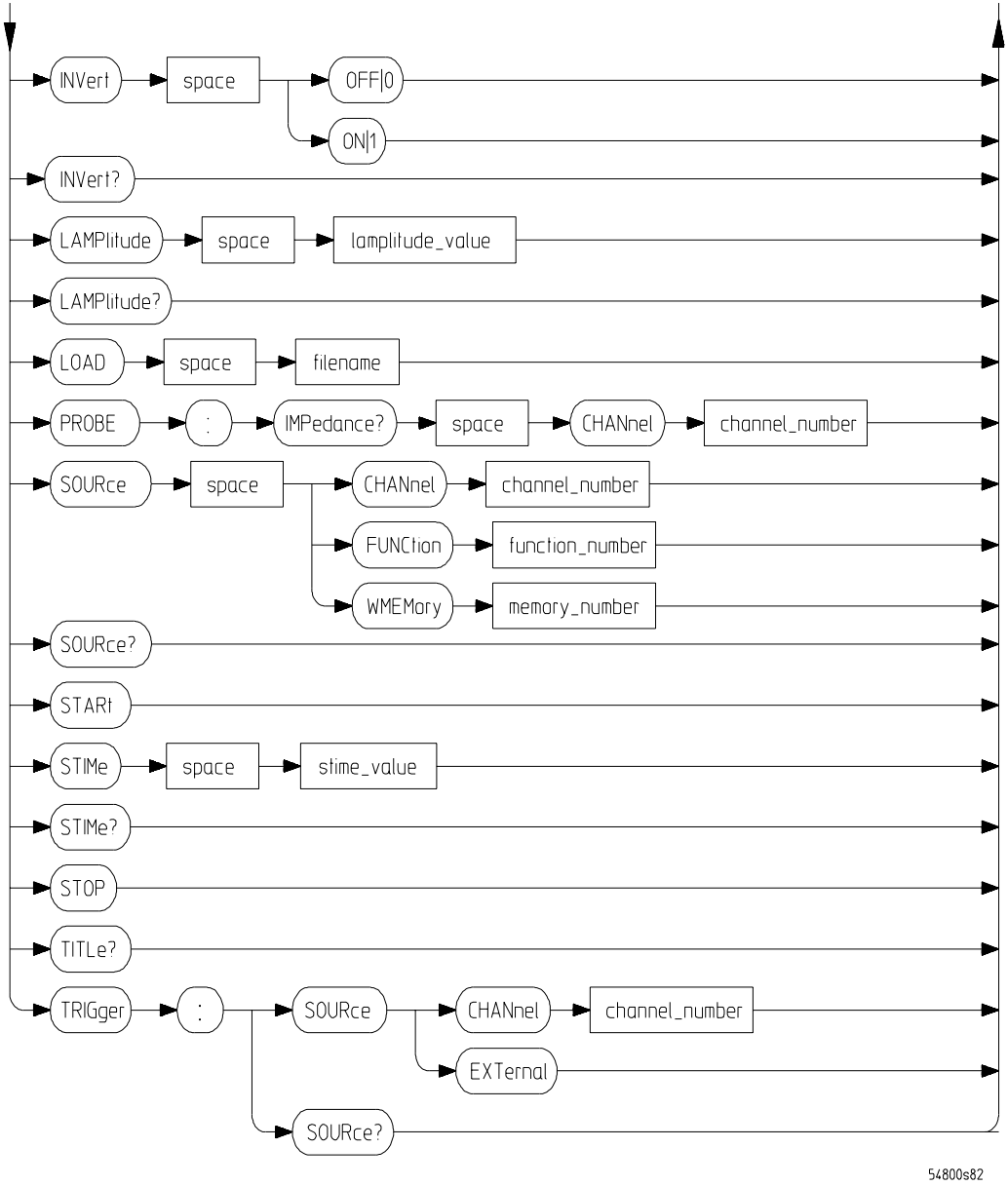

Mask TESt Commands Syntax Diagram (Continued)

Mask TESt Command Parameter	Description
channel_number	An integer, 1 or 2, for 54810 and 54820. An integer, 1 through 4, for all other Infiniium Oscilloscope models.
count_value	An integer 2 to 4096 specifying the number of data values to be averaged.
filename	An MS-DOS compatible name of the file, a maximum of 254 characters long (including the path name, if used).
function_number	An integer from 1 to 4.
hamplitude_value	A real number that represents the maximum amplitude, in volts, of a pulse.
lamplitude_value	A real number that represents the minimum amplitude, in volts, of a pulse.
max_waveforms	An integer 1 to 1,000,000,000.
memory_number	An integer from 1 to 4.
region_number	An integer, 1 through 8, designating the region for which you want to determine the failure count.
stime_value	An integer from 1 to 120 that represents the time-out value.
time_value	A real number .0 to 1440.
xdelta_value	A value for horizontal tolerance.
x1_value	A time value specifying the location of the x1 coordinate, which will then be treated as x=0 for mask regions coordinates.
ydelta_value	A value for vertical tolerance.
y1_value	A voltage value specifying the point at which y=0.
y2_value	A voltage value specifying the location of the y2 marker.

SELFtest Commands

Figure 2-47

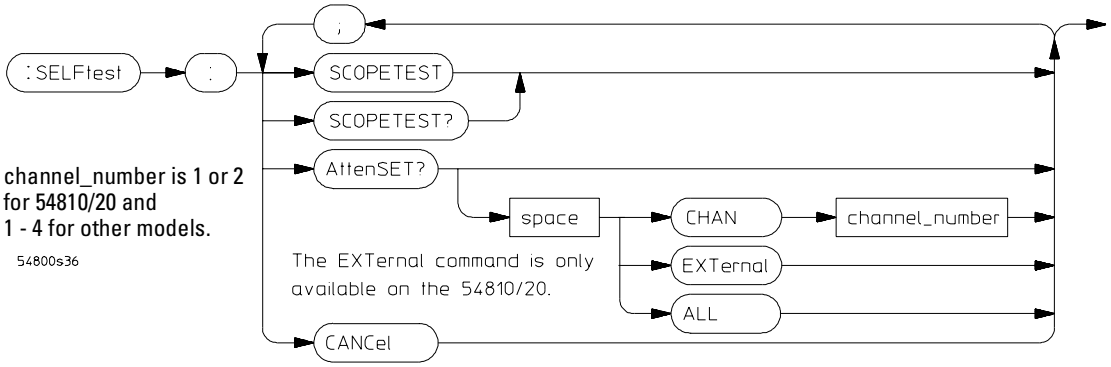

SELFtest Commands Syntax Diagram

SELFtest Command Parameter	Description
channel_number	An integer, 1 or 2, for 54810 and 54820. An integer, 1 through 4, for all other Infiniium Oscilloscope models.

TIMebase Commands

Figure 2-48

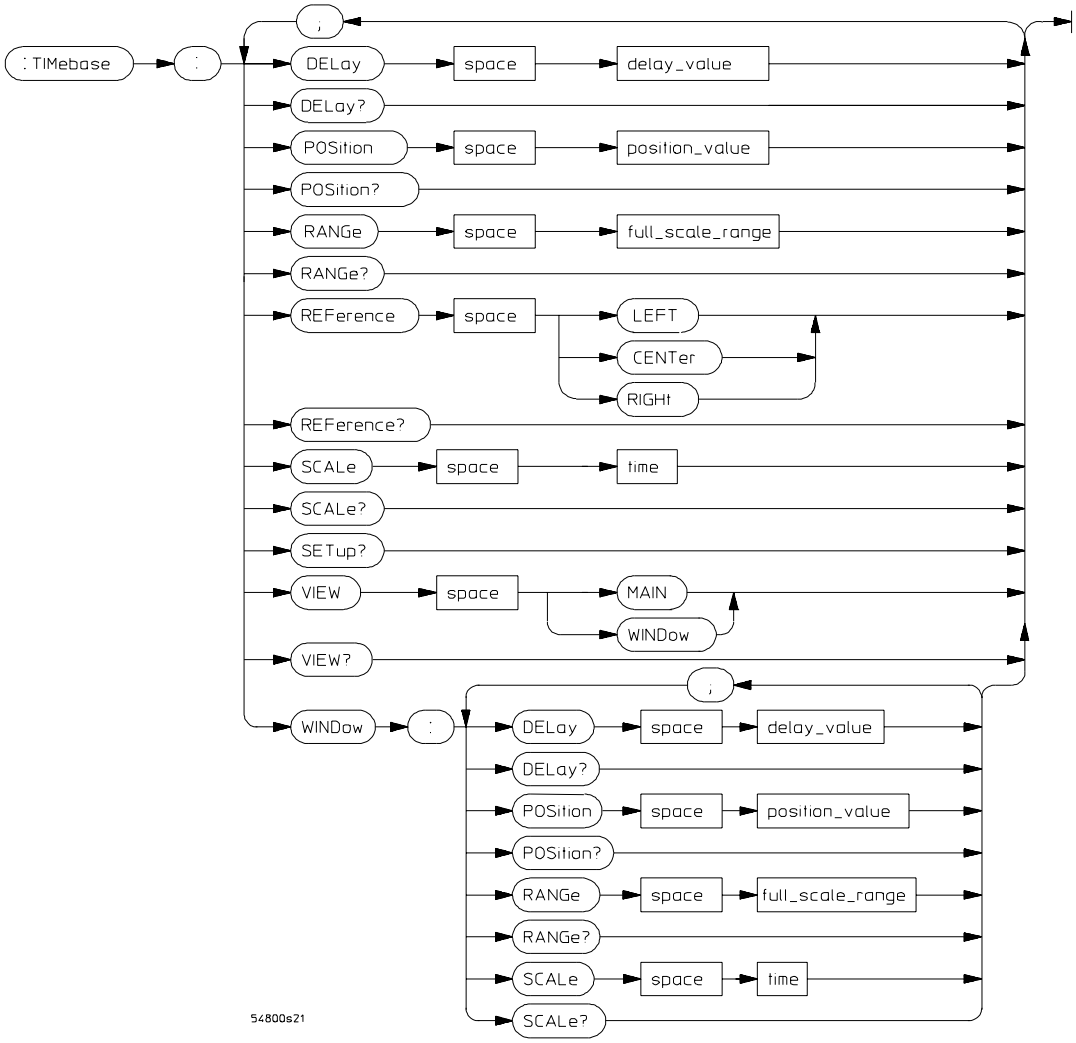

TIMebase Commands Syntax Diagram

TIMebase Command Parameter	Description
delay_value	A real number.
full_scale_range	A real number. See the Infiniium Programmer's Reference for range values.
position_value	A real number.
time	A real number, in seconds per division.

TRIGger Commands

Figure 2-49

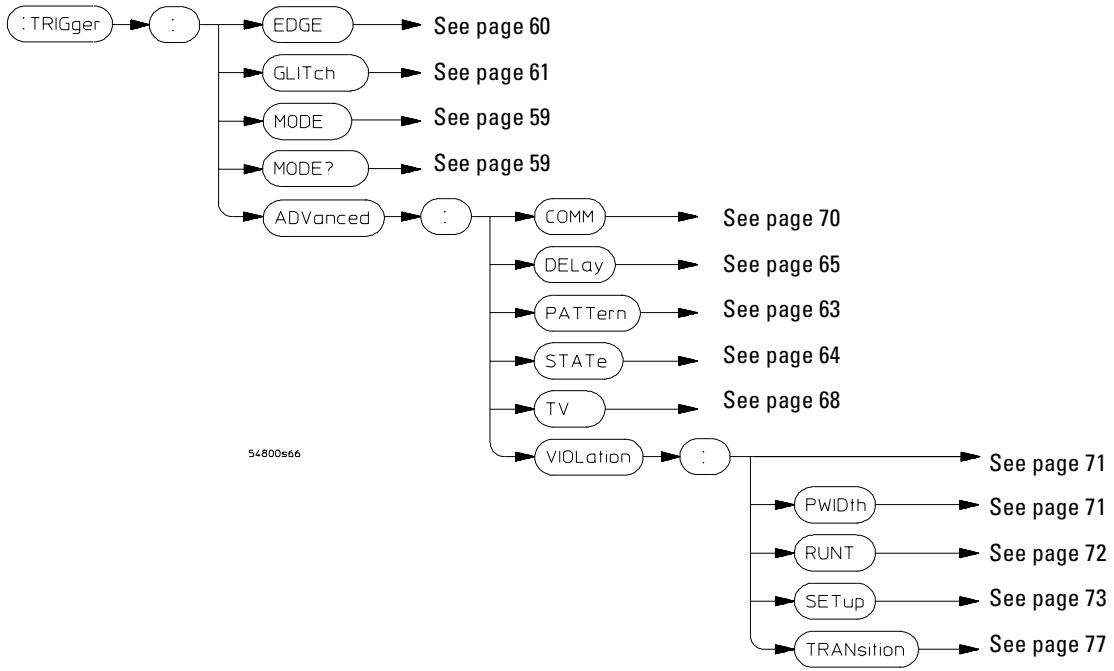

TRIGger Commands Syntax Overview

Figure 2-50

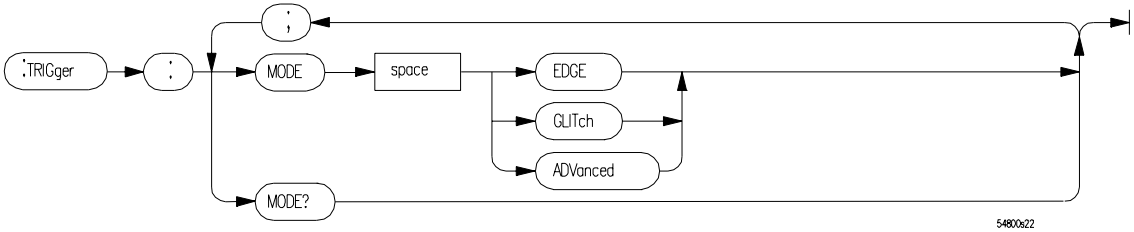

TRIGger Commands Syntax Diagram

Figure 2-51

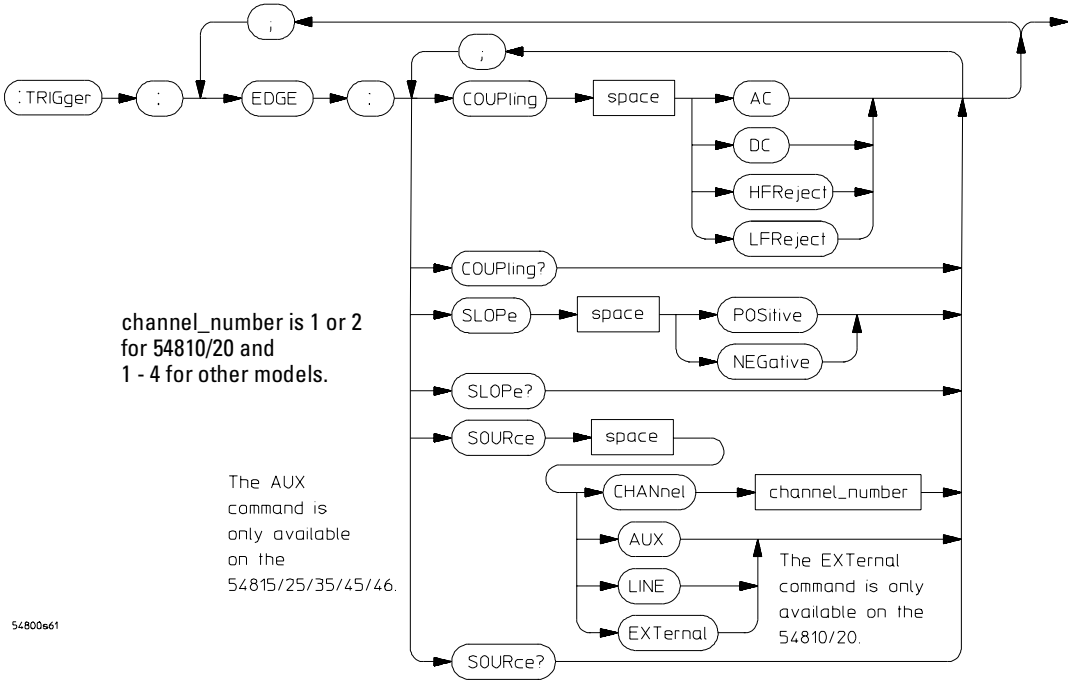

TRIGger Commands Syntax Diagram (Continued)

Figure 2-52

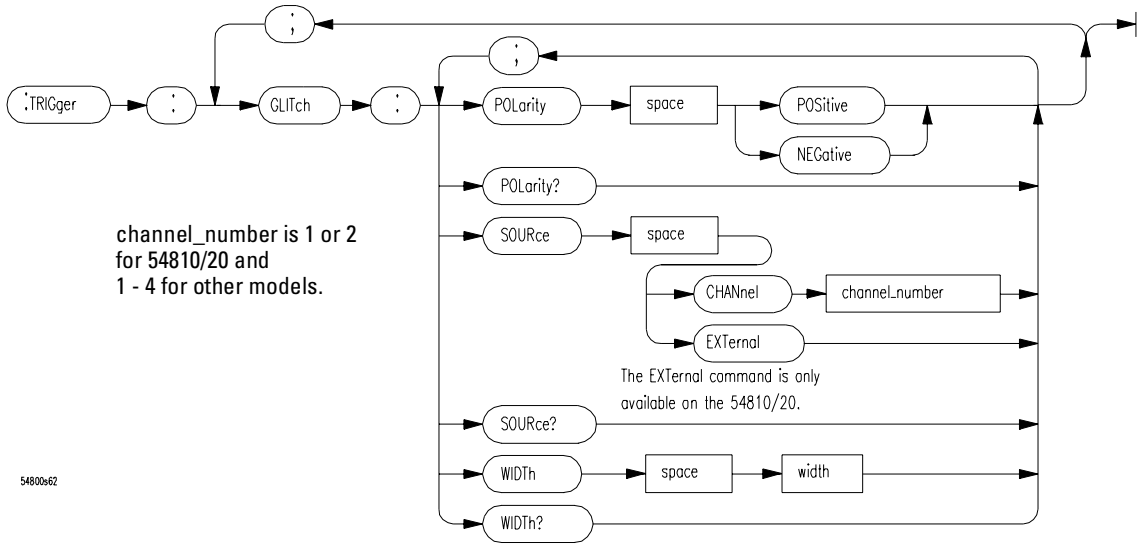

TRIGger Commands Syntax Diagram (Continued)

Figure 2-53

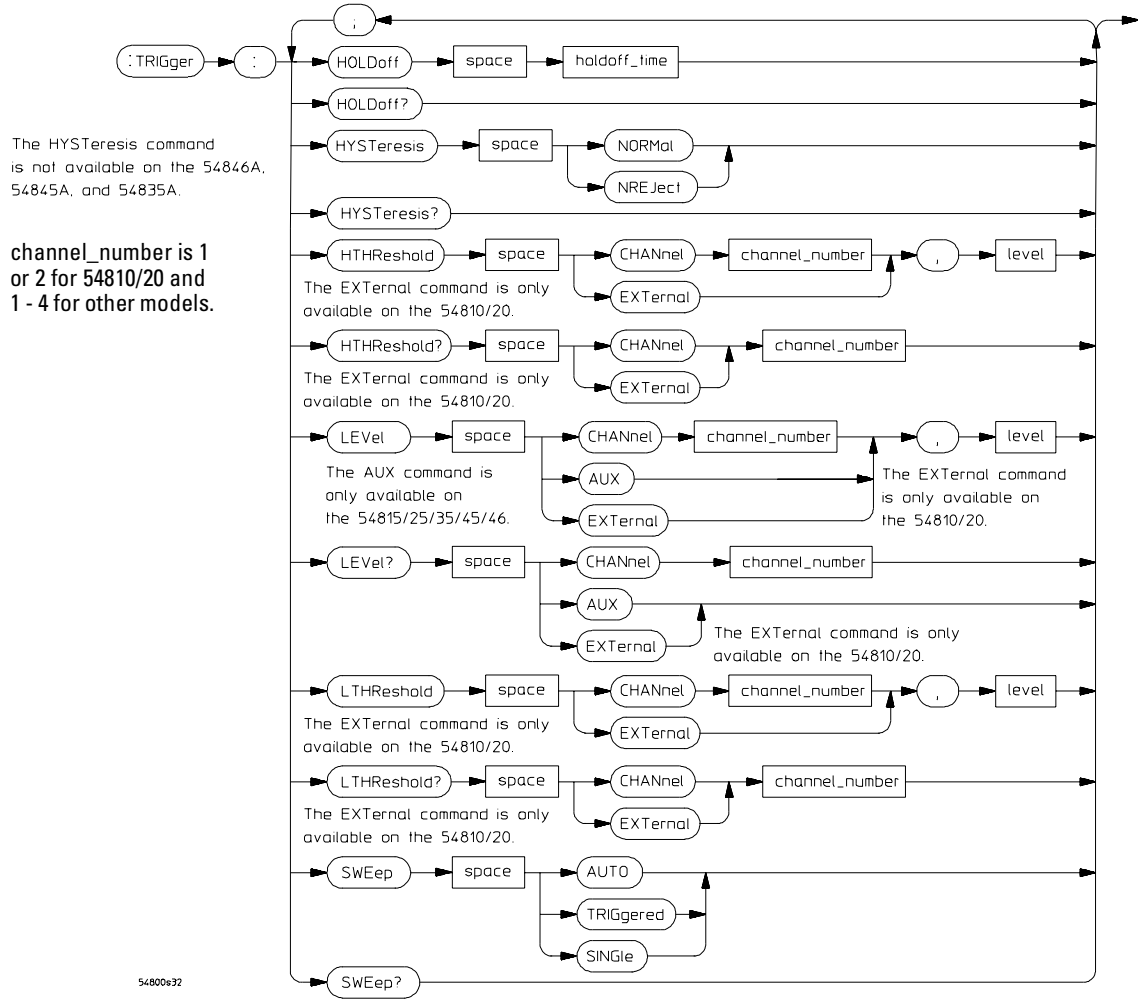

TRIGger Commands Syntax Diagram (Continued)

Figure 2-54

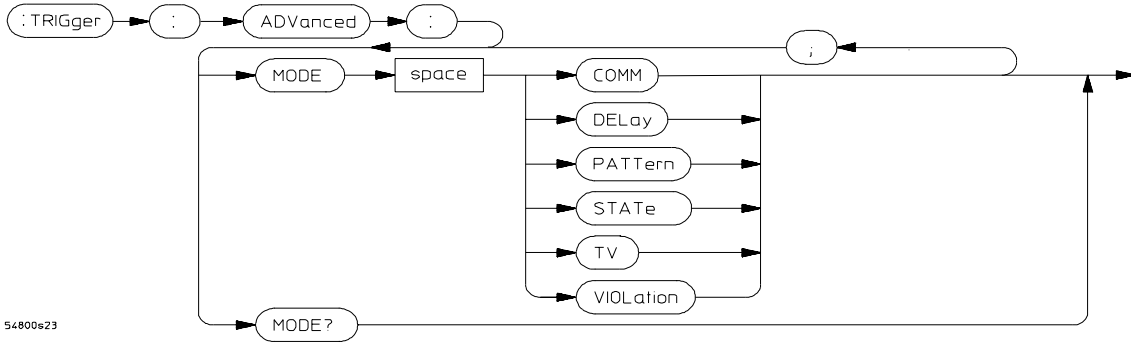

TRIGger Commands Syntax Diagram (Continued)

Figure 2-55

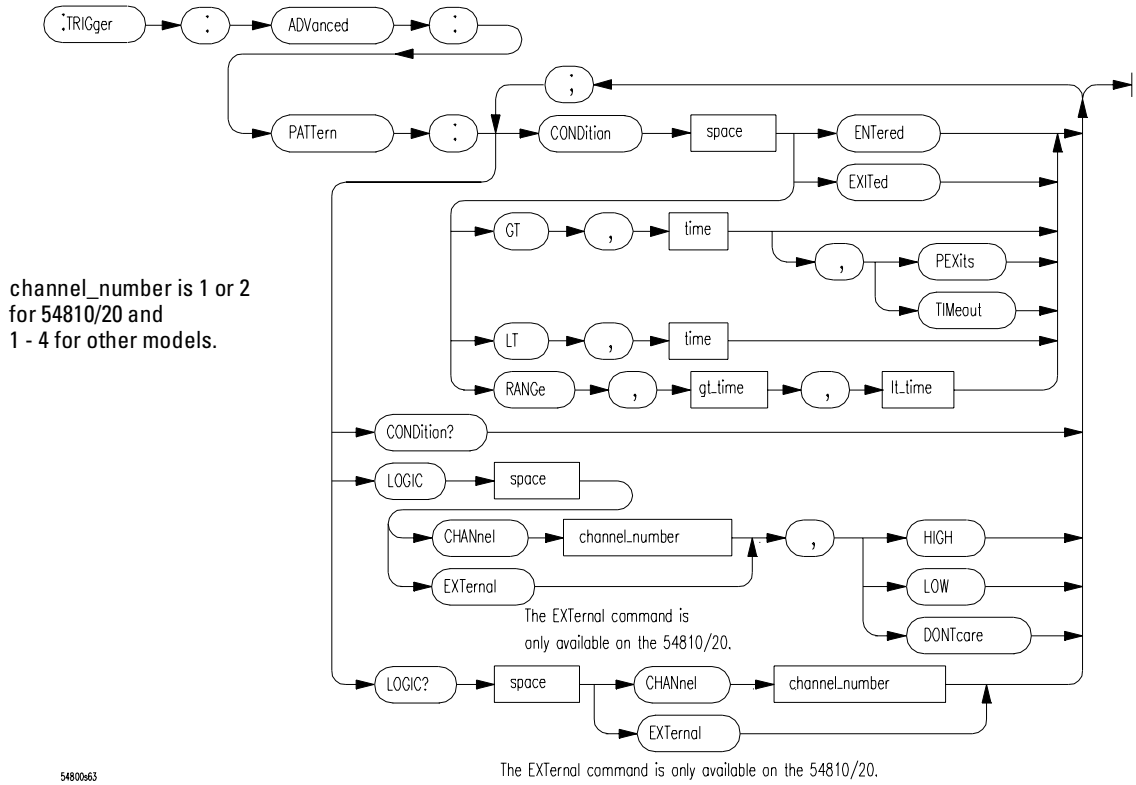

TRIGger Commands Syntax Diagram (Continued)

Figure 2-56

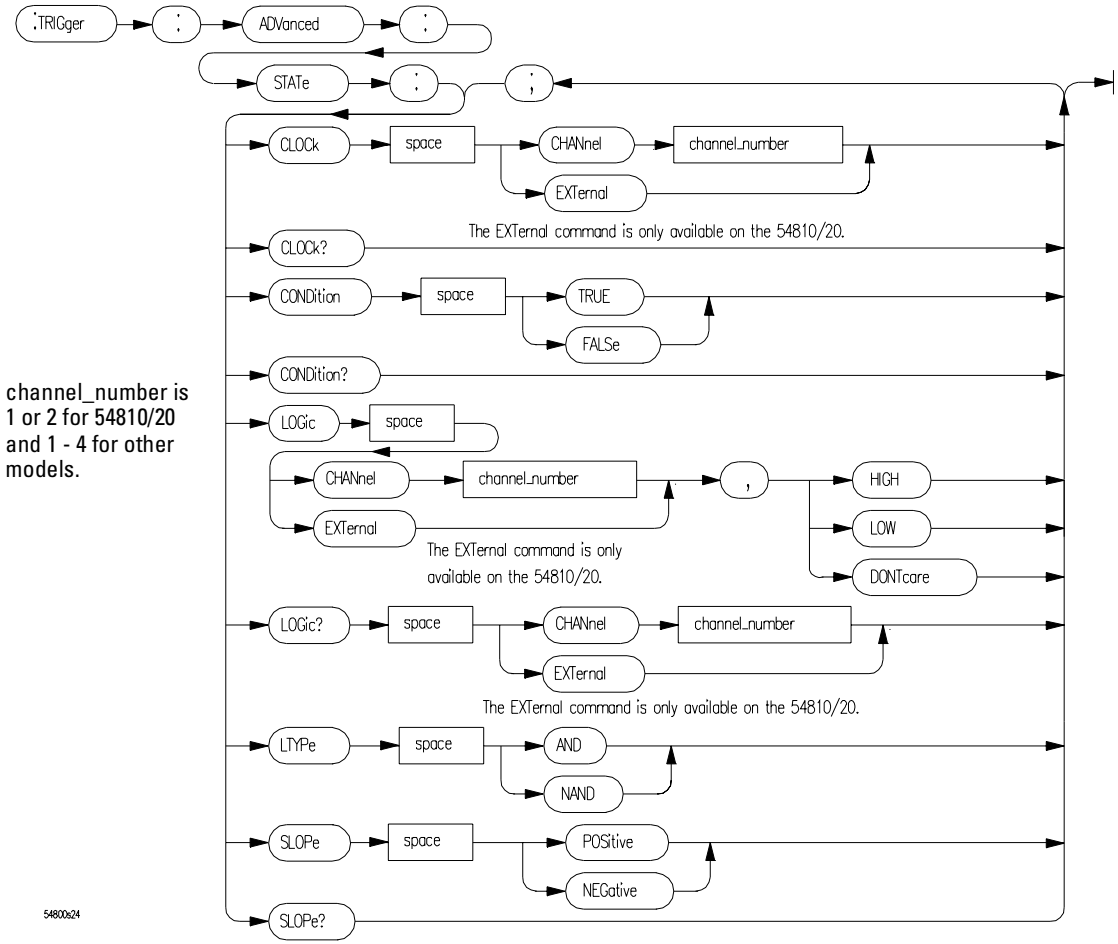

channel_number is 1 or 2 for 54810/20 and 1 - 4 for other models.

TRIGger Commands Syntax Diagram (Continued)

Figure 2-57

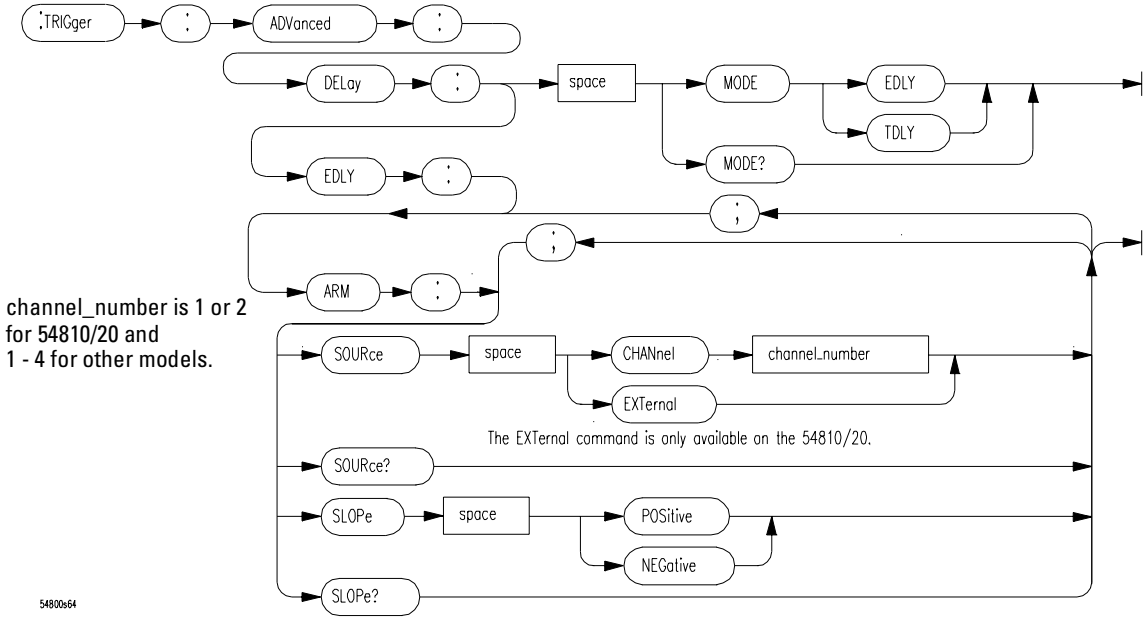

TRIGger Commands Syntax Diagram (Continued)

Figure 2-58

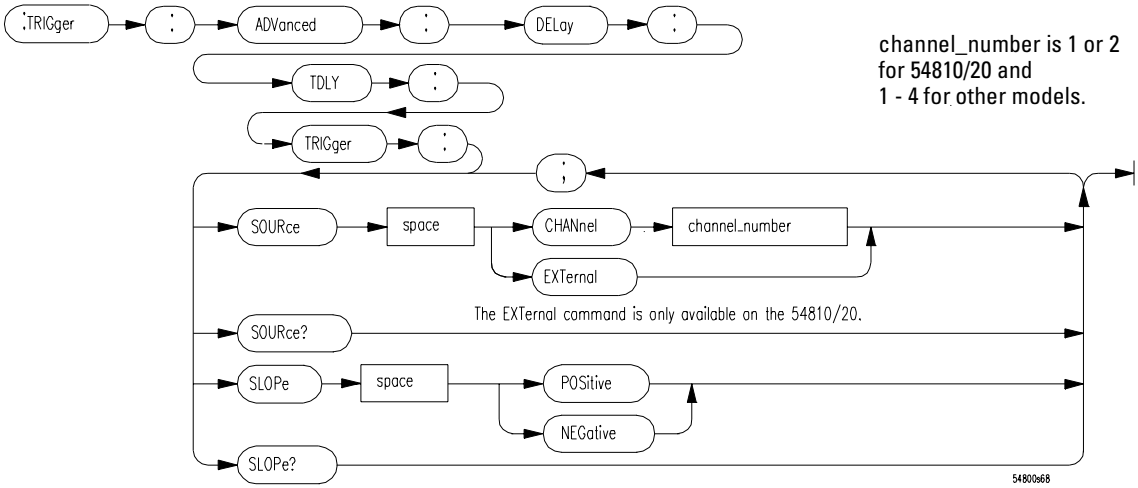

TRIGger Commands Syntax Diagram (Continued)

Figure 2-59

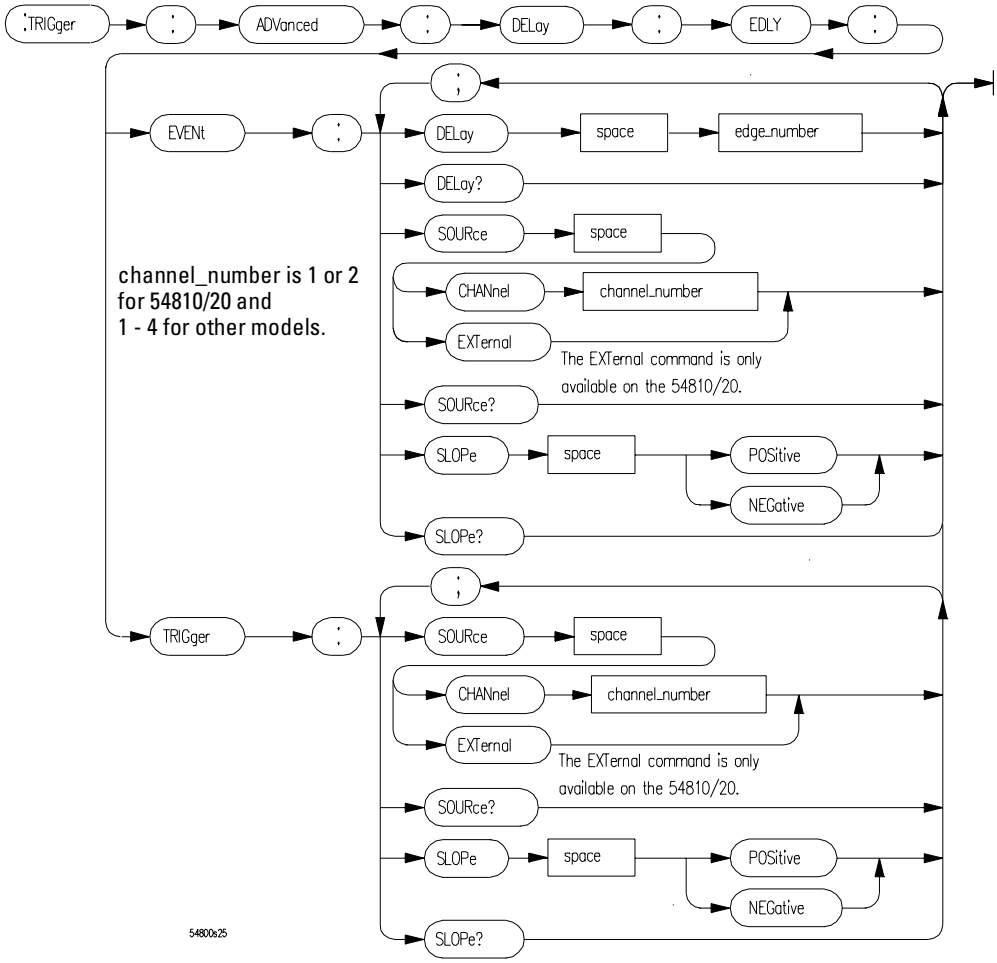

TRIGger Commands Syntax Diagram (Continued)

Figure 2-60

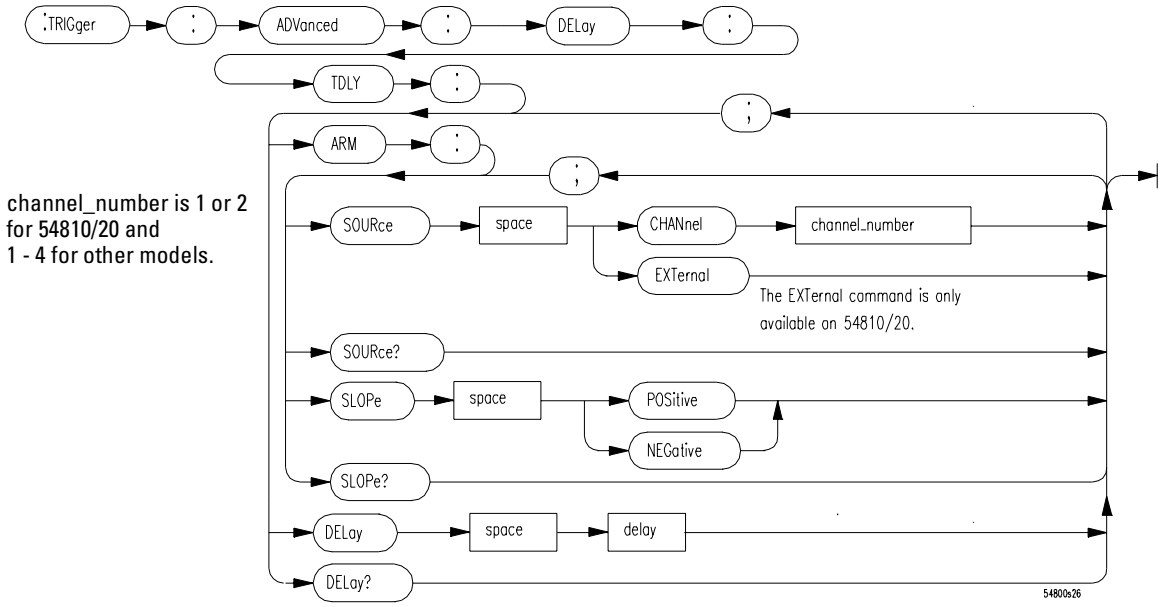

TRIGger Commands Syntax Diagram (Continued)

Figure 2-61

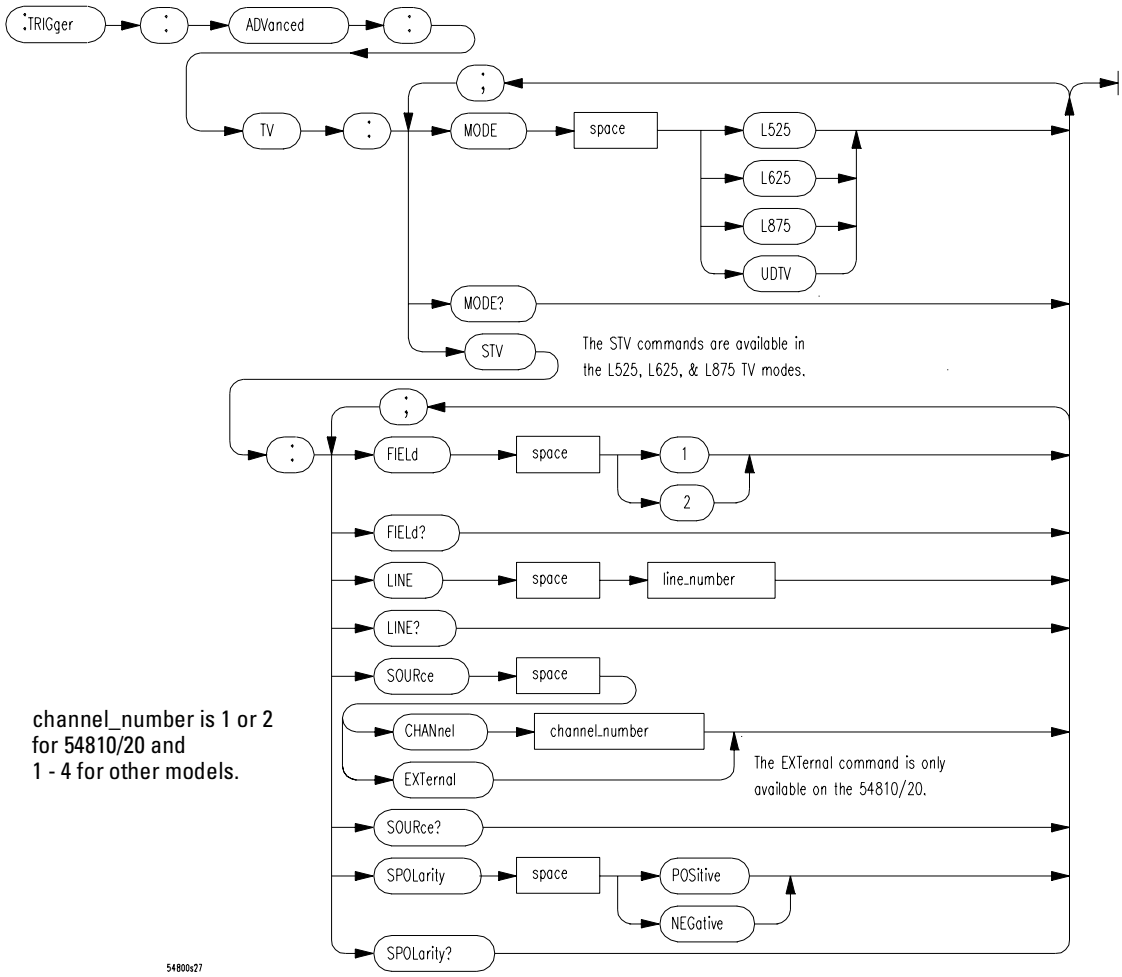

channel_number is 1 or 2 for 54810/20 and 1 - 4 for other models.

TRIGger Commands Syntax Diagram (Continued)

Figure 2-62

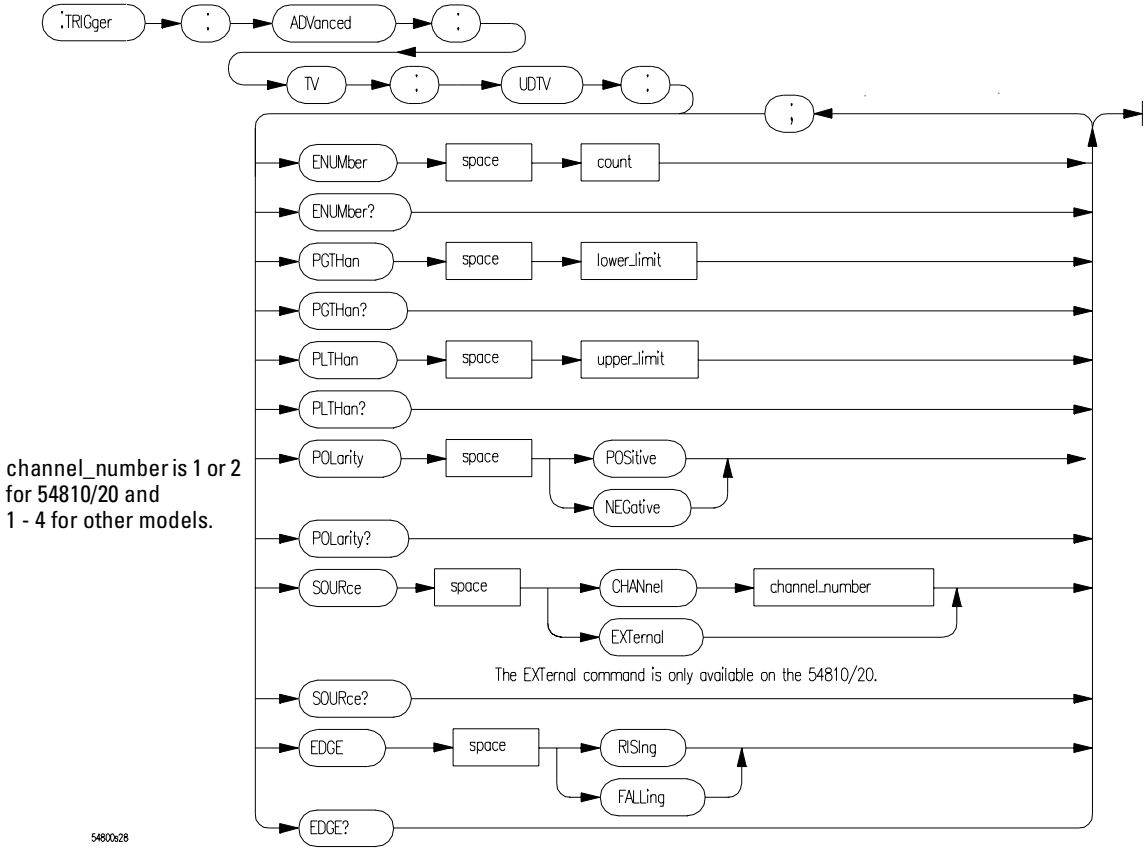

channel_number is 1 or 2 for 54810/20 and 1 - 4 for other models.

TRIGger Commands Syntax Diagram (Continued)

Figure 2-63

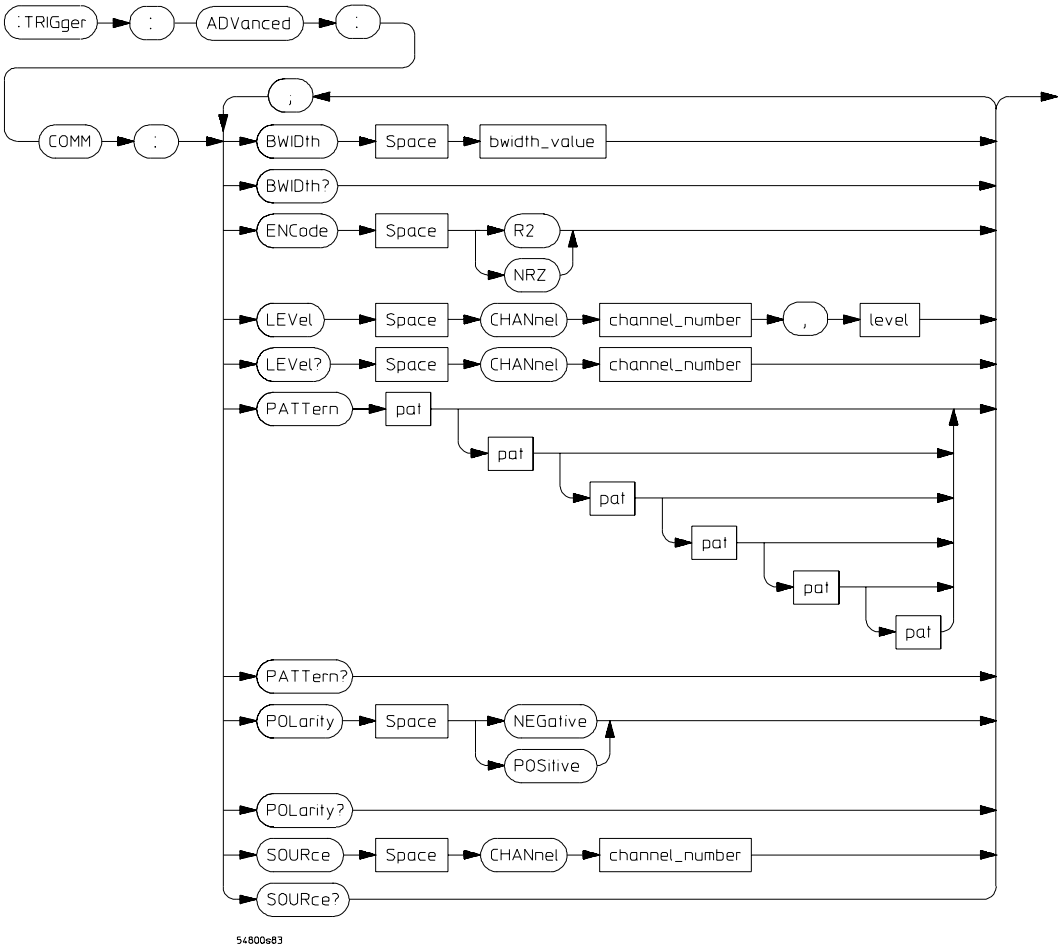

TRIGger Commands Syntax Diagram (Continued)

Figure 2-64

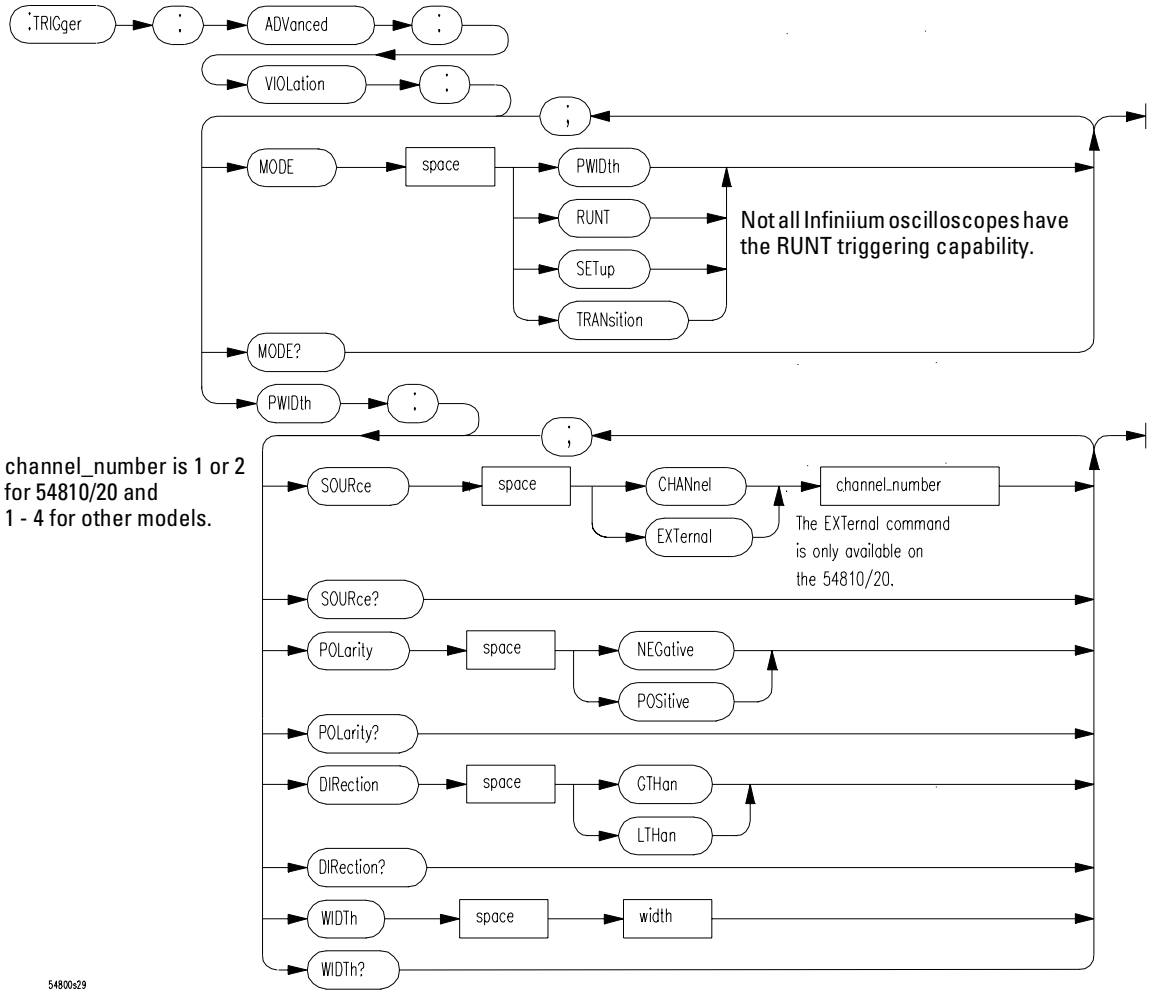

TRIGger Commands Syntax Diagram (Continued)

Figure 2-65

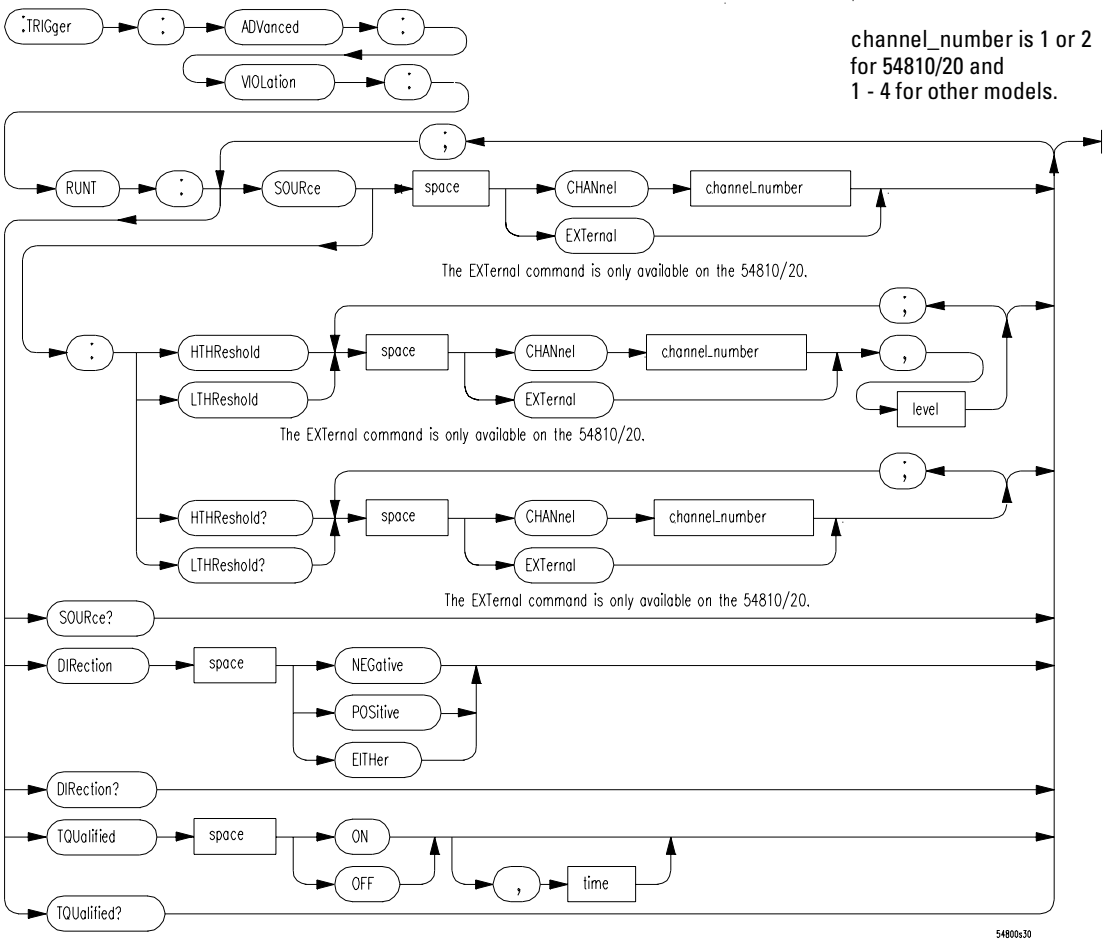

TRIGger Commands Syntax Diagram (Continued)

Figure 2-66

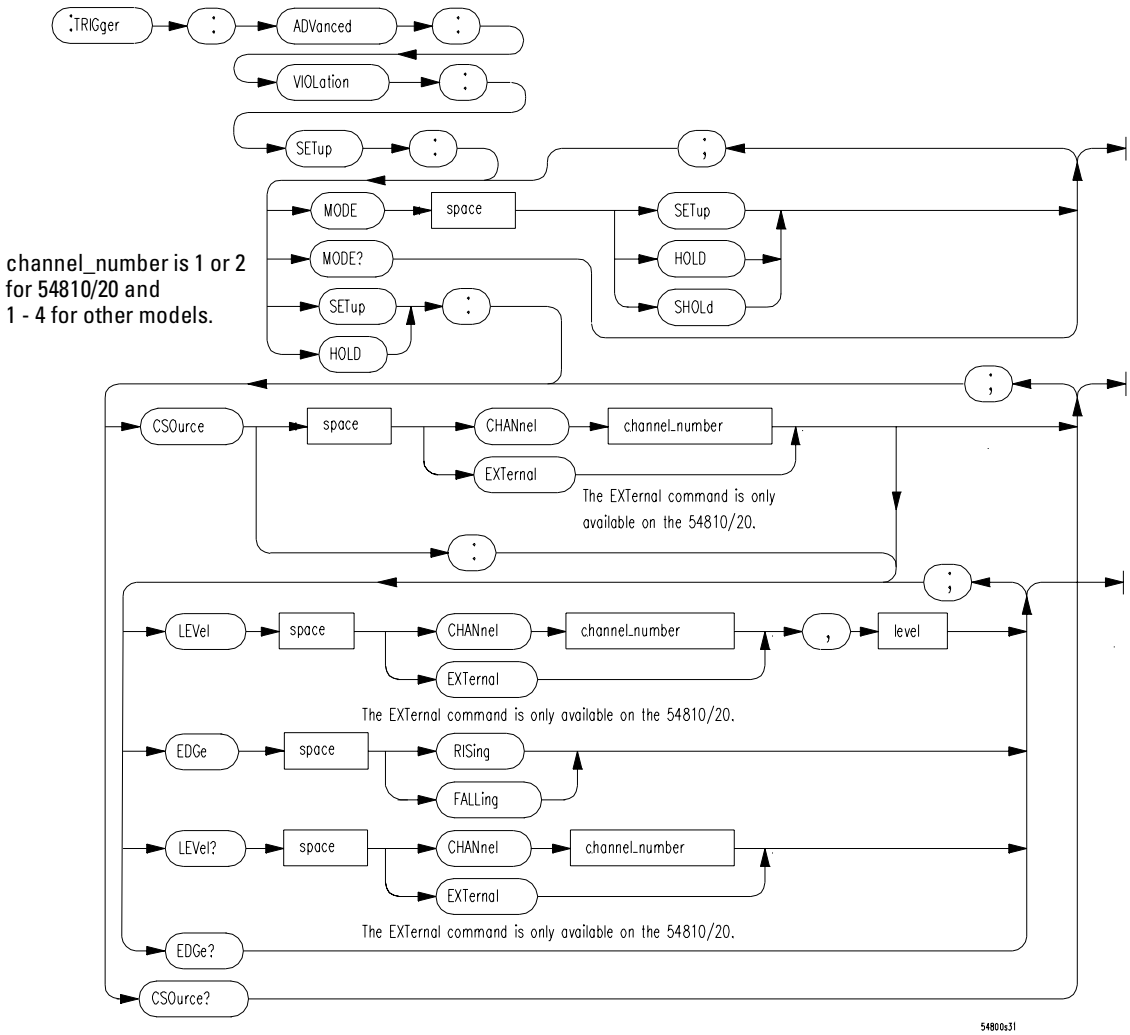

TRIGger Commands Syntax Diagram (Continued)

Figure 2-67

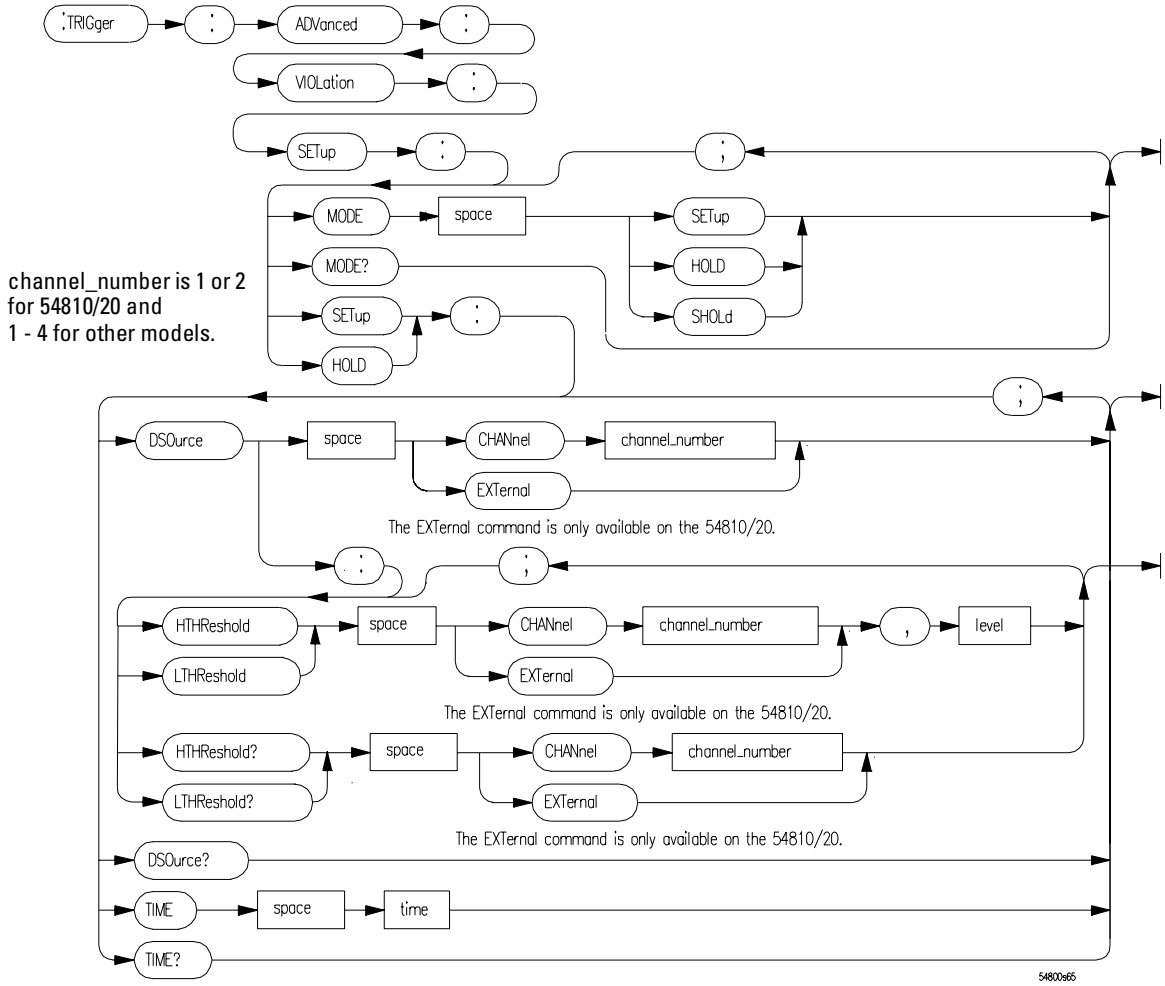

TRIGger Commands Syntax Diagram (Continued)

Figure 2-68

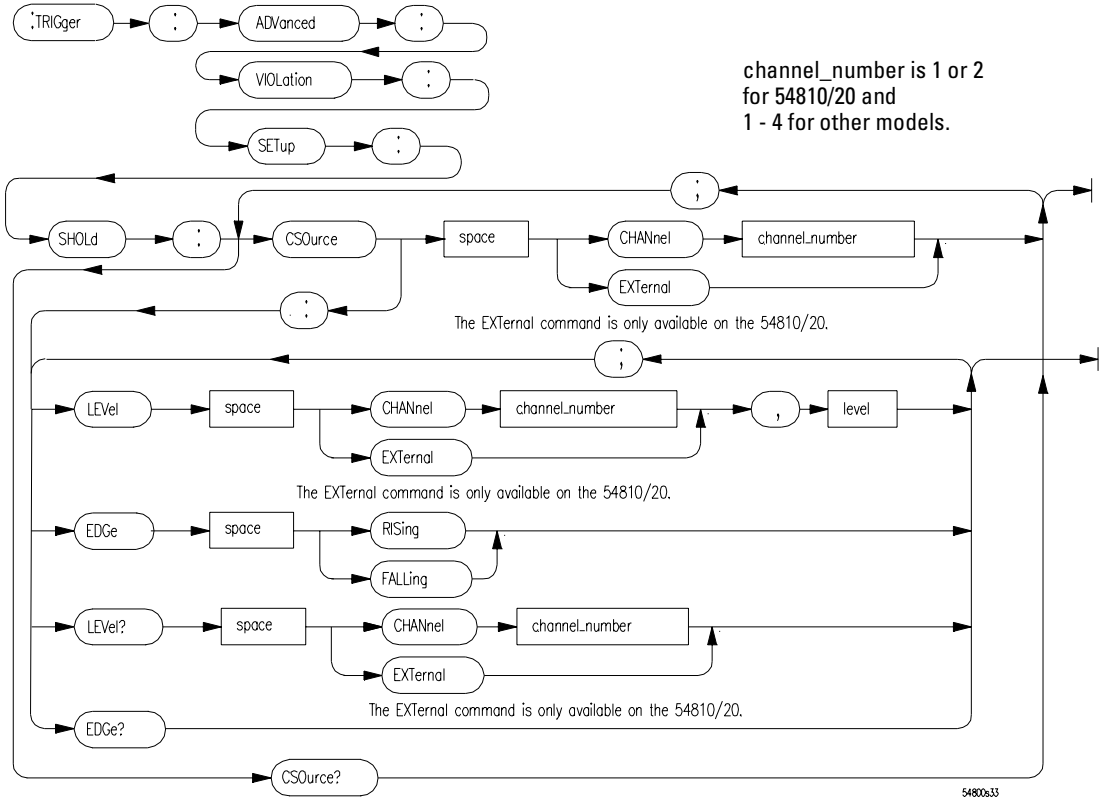

TRIGger Commands Syntax Diagram (Continued)

Figure 2-69

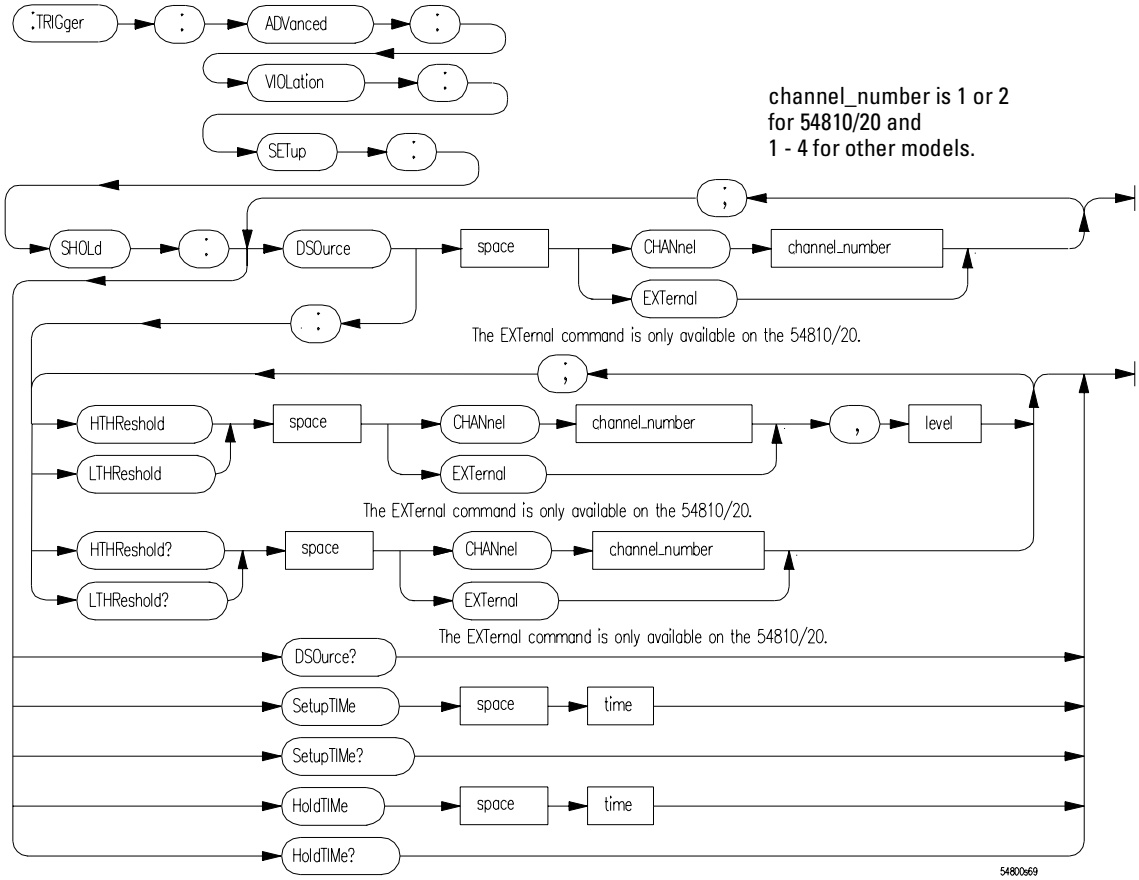

TRIGger Commands Syntax Diagram (Continued)

Figure 2-70

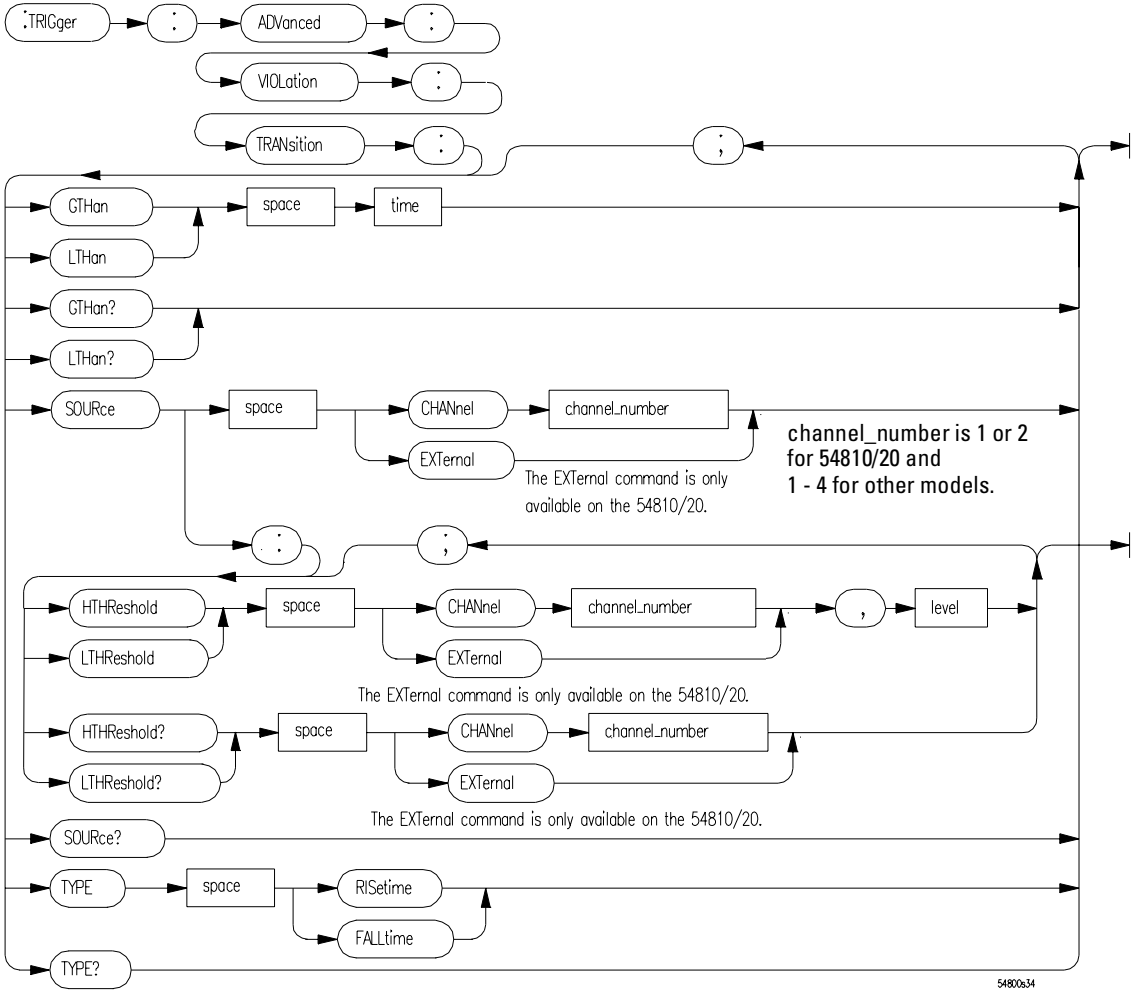

TRIGger Commands Syntax Diagram (Continued)

TRIGger Command Parameter	Description
bit	A 1, -1, or 0.
bwidth_value	A real number that represents the width of a bit.
channel_number	An integer, 1 or 2, for 54810 and 54820. An integer, 1 through 4, for all other Infiniium Oscilloscope models.
count	An integer that represents the line number to trigger on.
delay	Time, in seconds, for the delay trigger.
edge_number	An integer, from 0 to 16,000,000 specifying the number of edges to delay.
holdoff_time	A real number specifying the holdoff time, from 60 ns to 320 ns.
level	A real number specifying the voltage level for arming the trigger, or for the trigger thresholds.
line_number	Horizontal line number, ranging from 1 to 875.
lower_limit, upper_limit	Minimum and maximum pulse widths, from 3 ns to 160 ms.
min_time, max_time	The minimum time and maximum times for the trigger pattern.
time	The setup or hold time, or the time for the trigger transition in seconds.
width	The trigger pulse width, ranging from 1.5 ns to 160 ms.

For additional information about limits and times, see the Infiniium Oscilloscopes Programmer's Reference.

WAVeform Commands

Figure 2-71

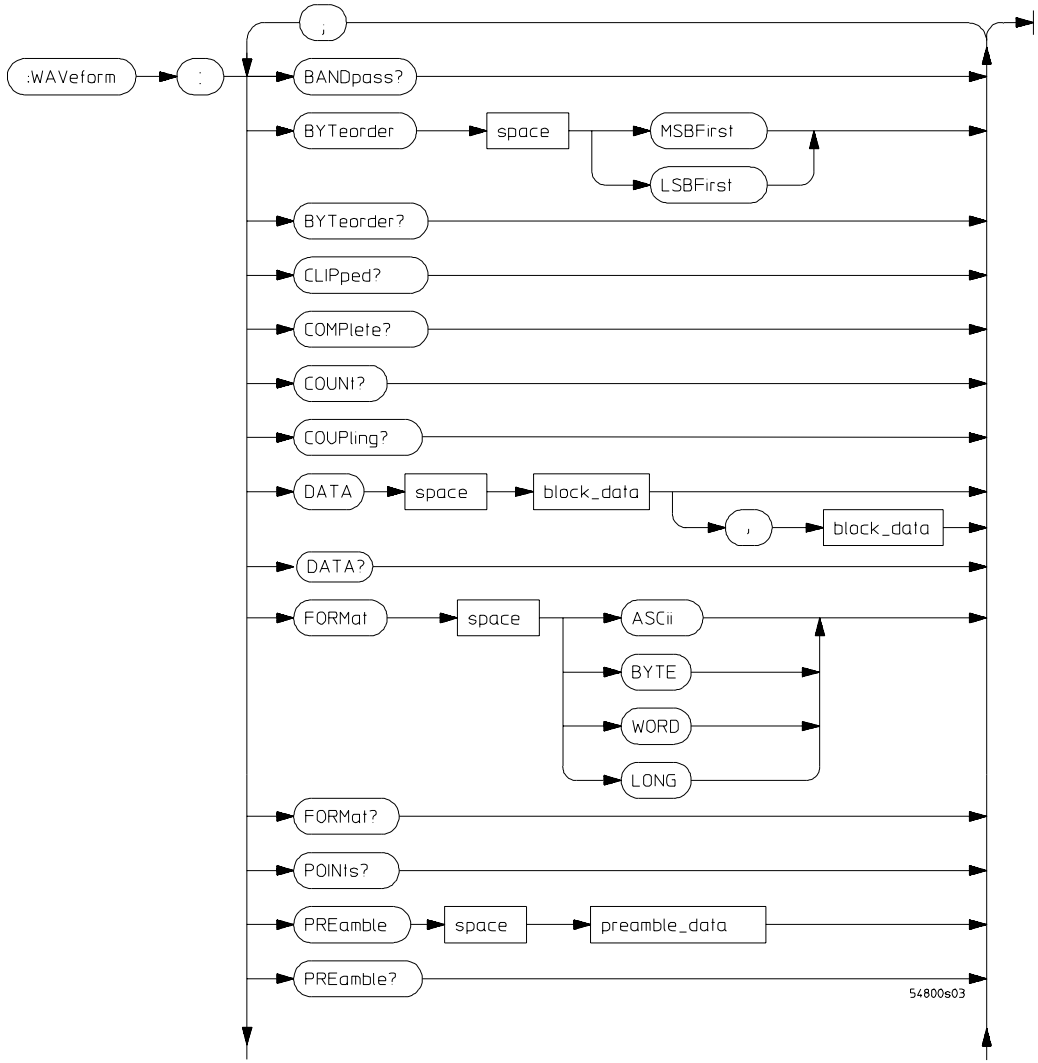

WAVeform Commands Syntax Diagram

Figure 2-72

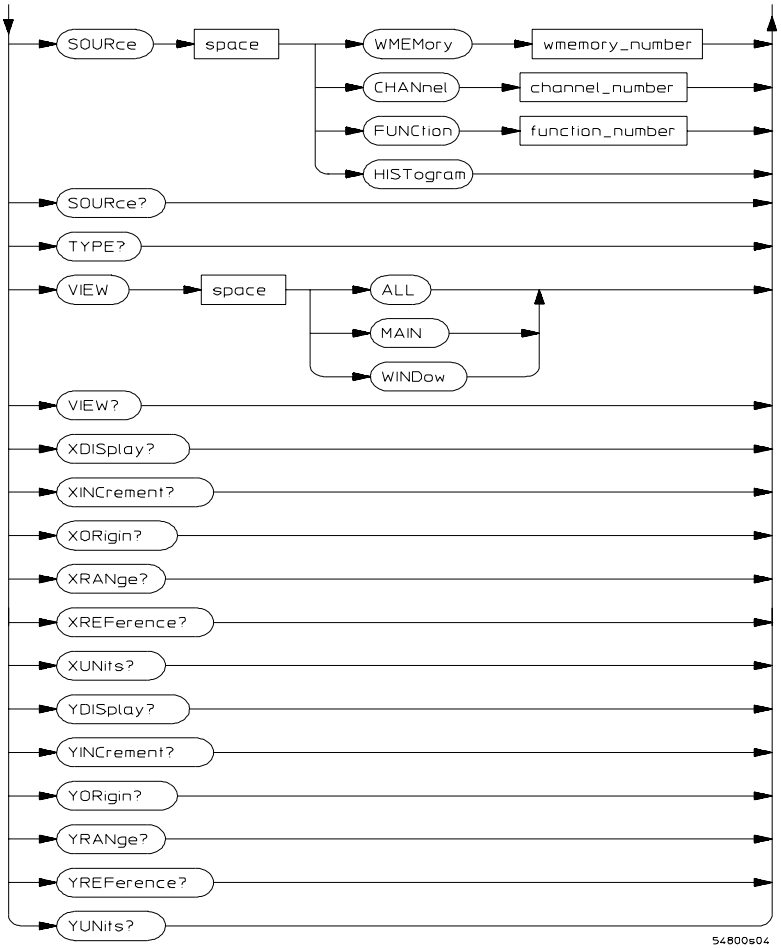

channel_number is 1 or 2 for 54810/20 and 1 - 4 for other models.

WAVeform Commands Syntax Diagram (Continued)

WAVeform Command Parameter	Description
block_data	Block data in IEEE 488.2 # format.
channel_number	An integer, 1 or 2, for 54810 and 54820. An integer, 1 through 4, for all other Infiniium Oscilloscope models.
function_number, wmemory_number	An integer, 1 through 4.
preamble_data	Refer to the PREamble command.

Waveform MEMory (WMEMory) Commands

Figure 2-73

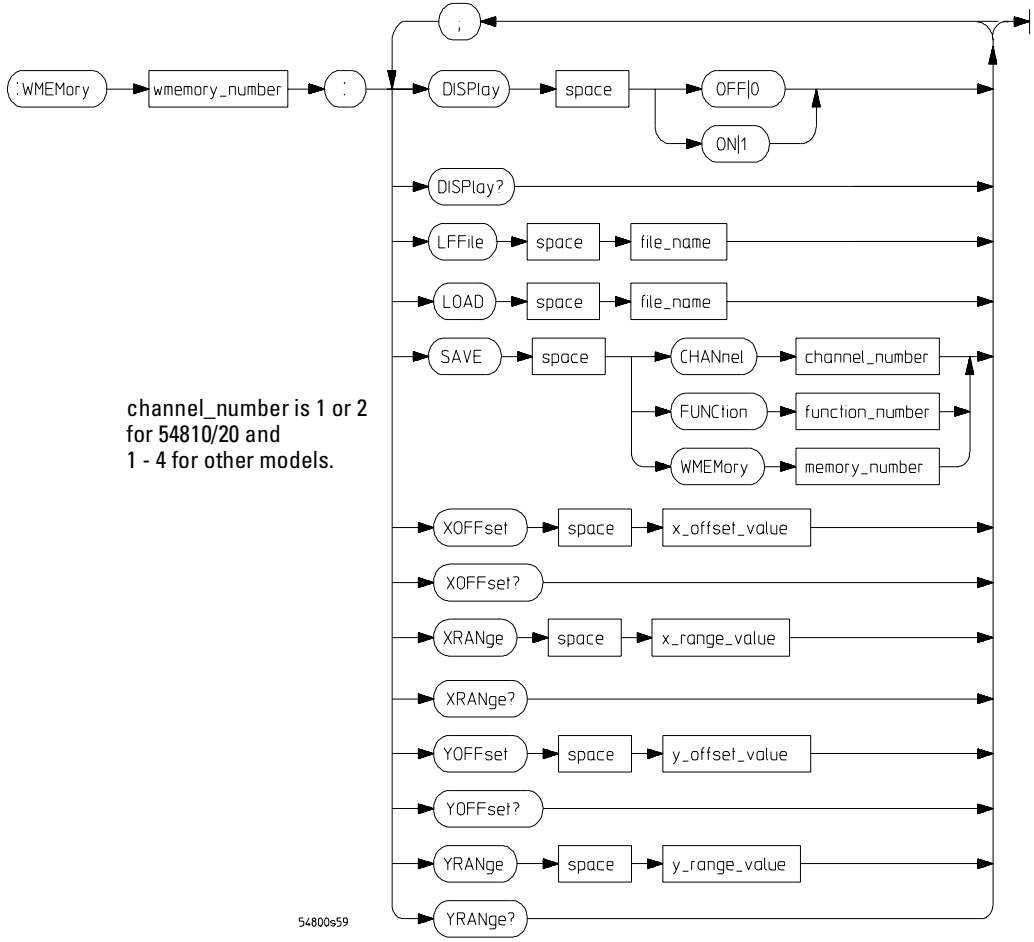

Waveform MEMory (WMEMory) Commands Syntax Diagram

Waveform MEMory (WMEMory) Command Parameter	Description
channel_number	An integer, 1 or 2, for 54810 and 54820. An integer, 1 through 4, for all other Infiniium Oscilloscope models.
function_number, wmemory_number	An integer, 1 through 4.
file_name	A quoted string which specifies the file to load.
x_offset_value	A real number for the horizontal offset (position) value.
x_range_value	A real number for the horizontal range value.
y_offset_value	A real number for the vertical offset value.
y_range_value	A real number for the vertical range value.

© Copyright Agilent Technologies 1997-2001. All Rights Reserved.

Reproduction, adaptation, or translation without prior written permission is prohibited, except as allowed under the copyright laws.

Restricted Rights Legend.

Use, duplication or disclosure by the U.S. Government is subject to restrictions as set forth in subparagraph (c) (1) (ii) of the Rights in Technical Data and Computer Software clause at DFARS 252.227-7013 for DOD agencies, and subparagraphs (c) (1) and (c) (2) of the Commercial Computer Software Restricted Rights clause at FAR 52.227-19 for other agencies.

Agilent Technologies

3000 Hanover Street

Palo Alto, California 94304 U.S.A.

Document Warranty

The information contained in this document is subject to change without notice.

Agilent Technologies makes no warranty of any kind with regard to this material, including, but not limited to, the implied warranties of merchantability or fitness for a particular purpose.

Agilent Technologies shall not be liable for errors contained herein or for damages in connection with the furnishing, performance, or use of this material.

Safety

This apparatus has been designed and tested in accordance with IEC Publication 1010, Safety Requirements for Measuring Apparatus, and has been supplied in a safe condition. This is a Safety Class I instrument (provided with terminal for protective earthing). Before applying power, verify that the correct safety precautions are taken (see the following warnings). In addition, note the external markings on the instrument that are described under "Safety Symbols."

Warning

- Before turning on the instrument, you must connect the protective earth terminal of the instrument to the protective conductor of the (mains) power cord. The mains plug shall only be inserted in a socket outlet provided with a protective earth contact. You must not negate the protective action by using an extension cord (power cable) without a protective conductor (grounding). Grounding one conductor of a two-conductor outlet is not sufficient protection.
- Only fuses with the required rated current, voltage, and specified type (normal blow, time delay, etc.) should be used. Do not use repaired fuses or short-circuited fuseholders. To do so could cause a shock of fire hazard.
- Service instructions are for trained service personnel. To avoid dangerous electric shock, do not perform any service unless qualified to do so. Do not attempt internal service or adjustment unless another person, capable of rendering first aid and resuscitation, is present.
- If you energize this instrument by an auto transformer (for voltage reduction), make sure the common terminal is connected to the earth terminal of the power source.
- Whenever it is likely that the ground protection is impaired, you must make the instrument inoperative and secure it against any unintended operation.
- Do not operate the instrument in the presence of flammable gasses or fumes. Operation of any electrical instrument in such an environment constitutes a definite safety hazard.
- Do not install substitute parts or perform any unauthorized modification to the instrument.
- Capacitors inside the instrument may retain a charge even if the instrument is disconnected from its source of supply.
- Use caution when exposing or handling the CRT. Handling or replacing the CRT shall be done only by qualified maintenance personnel.

Safety Symbols

Instruction manual symbol: the product is marked with this symbol when it is necessary for you to refer to the instruction manual in order to protect against damage to the product.

Hazardous voltage symbol.

Earth terminal symbol: Used to indicate a circuit common connected to grounded chassis.

WARNING

The Warning sign denotes a hazard. It calls attention to a procedure, practice, or the like, which, if not correctly performed or adhered to, could result in personal injury. Do not proceed beyond a Warning sign until the indicated conditions are fully understood and met.

CAUTION

The Caution sign denotes a hazard. It calls attention to an operating procedure, practice, or the like, which, if not correctly performed or adhered to, could result in damage to or destruction of part or all of the product. Do not proceed beyond a Caution symbol until the indicated conditions are fully understood or met.

Agilent Technologies
P.O. Box 2197
1900 Garden of the Gods Road
Colorado Springs, CO 80901

Product Warranty

This Agilent Technologies product has a warranty against defects in material and workmanship for a period of three years from date of shipment. During the warranty period, Agilent Technologies will, at its option, either repair or replace products that prove to be defective. For warranty service or repair, this product must be returned to a service facility designated by Agilent Technologies. For products returned to Agilent Technologies for warranty service, the Buyer shall prepay shipping charges to Agilent Technologies and Agilent Technologies shall pay shipping charges to return the product to the Buyer. However, the Buyer shall pay all shipping charges, duties, and taxes for products returned to Agilent Technologies from another country. Agilent Technologies warrants that its software and firmware designated by Agilent Technologies for use with an instrument will execute its programming instructions when properly installed on that instrument. Agilent Technologies does not warrant that the operation of the instrument software, or firmware will be uninterrupted or error free.

Limitation of Warranty

The foregoing warranty shall not apply to defects resulting from improper or inadequate maintenance by the Buyer, Buyer-supplied software or interfacing, unauthorized modification or misuse, operation outside of the environmental specifications for the product, or improper site preparation or maintenance.

No other warranty is expressed or implied. Agilent Technologies specifically disclaims the implied warranties of merchantability or fitness for a particular purpose.

Exclusive Remedies

The remedies provided herein are the buyer's sole and exclusive remedies. Agilent Technologies shall not be liable for any direct, indirect, special, incidental, or consequential damages, whether based on contract, tort, or any other legal theory.

Assistance

Product maintenance agreements and other customer assistance agreements are available for Agilent Technologies products. For any assistance, contact your nearest Agilent Technologies Sales Office.

Certification

Agilent Technologies certifies that this product met its published specifications at the time of shipment from the factory. Agilent Technologies further certifies that its calibration measurements are traceable to the United States National Institute of Standards and Technology, to the extent allowed by the Institute's calibration facility, and to the calibration facilities of other International Standards Organization members.

About this edition

This is the *Infiniium Oscilloscopes Programmer's Quick Reference Guide*.

Publication number
54810-97065, Feb. 2001

Print history is as follows:

54810-97002, June 1997
54810-97012, Sept. 1997
54810-97015, Sept. 1998
54810-97030, May 1999
54810-97042, Sept. 1999
54810-97054, Jan. 2000
54810-97058, March 2000
54810-97060, Oct. 2000
54810-97062, Oct. 2000
54810-97065, Feb. 2001

Printed in USA.

New editions are complete revisions of the manual. Many product updates do not require manual changes; and, conversely, manual corrections may be done without accompanying product changes. Therefore, do not expect a one-to-one correspondence between product updates and manual updates.