ManualsPlus.com

User's and Service Guide

Agilent Technologies 85056A
2.4 mm Precision Calibration Kit

Agilent Technologies

Agilent Part Number: 85056-90020

Printed in USA
Print Date: January 2002
Supersedes: September 2000

© Copyright 1996, 2000, 2002 Agilent Technologies, Inc. All rights reserved.

ManualsPlus.com

Warranty

This product is warranted against defects in material and workmanship for a period of one year from date of shipment. During the warranty period, Agilent Technologies will, at its option, either repair or replace products which prove to be defective.

For warranty service or repair, this product must be returned to a service facility designated by Agilent. Buyer shall prepay shipping charges to Agilent and Agilent shall pay shipping charges to return the product to Buyer. However, Buyer shall pay all shipping charges, duties, and taxes for products returned to Agilent from another country.

Agilent Technologies warrants that its software and firmware designated by Agilent for use with an instrument will execute its programming instructions when properly installed on that instrument. Agilent Technologies does not warrant that the operation of the instrument, or software, or firmware will be uninterrupted or error-free.

Limitation of Warranty

The foregoing warranty shall not apply to defects resulting from improper or inadequate maintenance by Buyer, Buyer-supplied software or interfacing, unauthorized modification or misuse, operation outside of the environmental specifications for the product, or improper site preparation or maintenance.

NO OTHER WARRANTY IS EXPRESSED OR IMPLIED. AGILENT TECHNOLOGIES SPECIFICALLY DISCLAIMS THE IMPLIED WARRANTIES OF MERCHANTABILITY AND FITNESS FOR A PARTICULAR PURPOSE.

Exclusive Remedies

THE REMEDIES PROVIDED HEREIN ARE BUYER'S SOLE AND EXCLUSIVE REMEDIES. AGILENT TECHNOLOGIES SHALL NOT BE LIABLE FOR ANY DIRECT, INDIRECT, SPECIAL, INCIDENTAL, OR CONSEQUENTIAL DAMAGES, WHETHER BASED ON CONTRACT, TORT, OR ANY OTHER LEGAL THEORY.

Assistance

Product maintenance agreements and other customer assistance agreements are available for Agilent products.

For any assistance, contact Agilent Technologies. Refer to page 5-4 for a list of Agilent contacts.

ManualsPlus.com

1. General Information
Calibration Kit Overview 1-2
Kit Contents 1-2
Broadband Loads 1-2
Offset Opens and Shorts 1-2
Adapters 1-2
Sliding Loads 1-3
Compatible Network Analyzers 1-3
Options 1-3
Equipment Required but Not Supplied 1-3
Incoming Inspection 1-3
Recording the Device Serial Numbers 1-5
Clarifying the Sex of a Connector 1-6
Preventive Maintenance 1-6

2. Specifications
Environmental Requirements 2-2
Temperature—What to Watch Out For 2-2
Mechanical Characteristics 2-3
Pin Depth 2-3
Electrical Specifications 2-5
Certification 2-6

3. Use, Maintenance, and Care of the Devices
Electrostatic Discharge 3-2
Visual Inspection 3-3
Look for Obvious Defects and Damage First 3-3
What Causes Connector Wear? 3-3
Inspect the Mating Plane Surfaces 3-3
Inspect Female Connectors 3-4
Cleaning Connectors 3-4
Gaging Connectors 3-6
Connector Gage Accuracy 3-6
When to Gage Connectors 3-7
Gaging Procedures 3-8
Gaging 2.4 mm Connectors 3-8
Gaging the 2.4 mm Sliding Loads 3-10
Adjusting the Sliding Load Pin Depth 3-12
Connections 3-14
How to Make a Connection 3-14
Preliminary Connection 3-14
Final Connection Using a Torque Wrench 3-14
Connecting the Sliding Load 3-16
How to Separate a Connection 3-17
Using the Sliding Load 3-18
Handling and Storage 3-18

ManualsPlus.com

4. Performance Verification
Introduction 4-2
How Agilent Verifies the Devices in Your Kit 4-2
Recertification 4-3
How Often to Recertify 4-3
Where to Send a Kit for Recertification 4-3

5. Troubleshooting
Troubleshooting Process 5-2
Returning a Kit or Device to Agilent 5-3
Contacting Agilent 5-4

6. Replaceable Parts
Introduction 6-2

A. Standard Definitions
Standard Class Assignments A-2
Blank Forms A-5
Nominal Standard Definitions A-8
Setting the System Impedance A-8
Blank Form A-12

ManualsPlus.com

1 General Information

ManualsPlus.com

Calibration Kit Overview

The Agilent 85056A 2.4 mm calibration kit is used to calibrate Agilent network analyzers up to 50 GHz for measurements of components with 2.4 mm connectors.

Kit Contents

The 85056A calibration kit includes the following items:

- offset opens and shorts
- broadband and sliding load terminations
- 2.4 mm adapters
- 2.4 mm gage sets
- 5/16 in, 90 N-cm (8 in-lb) torque wrench
- 7 mm open-end wrench
- data disks that contain the calibration definitions of the devices in the calibration kit

Refer to Chapter 6, “Replaceable Parts,” for a complete list of kit contents and their associated part numbers.

Broadband Loads

The broadband loads are metrology-grade, 50Ω terminations that have been optimized for performance up to 50 GHz. The rugged internal structure provides for highly repeatable connections. A distributed resistive element on sapphire provides excellent stability and return loss.

Offset Opens and Shorts

The offset opens and shorts are built from parts that are machined to the current state-of-the-art in precision machining.

The offset short’s inner conductors have a one-piece construction, common with the shorting plane. The construction provides for extremely repeatable connections.

The offset opens have inner conductors that are supported by a strong, low-dielectric-constant plastic to minimize compensation values.

Both the opens and shorts are constructed so that the pin depth can be controlled very tightly, thereby minimizing phase errors. The lengths of the offsets in the opens and shorts are designed so that the difference in phase of their reflection coefficients is approximately 180 degrees at all frequencies.

Adapters

Like the other devices in the kit, the adapters are built to very tight tolerances to provide good broadband performance and to ensure stable, repeatable connections.

The adapters are designed so that their nominal electrical lengths are the same, allowing them to be used in calibration procedures for non-insertable devices.

ManualsPlus.com

Sliding Loads

The sliding loads in this kit are designed to provide excellent performance from 4 GHz to 50 GHz. The inner and outer conductors of the airline portion are precision machined to state-of-the-art tolerances. Although the sliding load has exceptional return loss, its superior load stability qualifies it as a high-performance device.

The sliding load was designed with the ability to extend the inner conductor for connection purposes and then pull it back to a preset pin depth. This feature is critical since it minimizes the possibility of damage during connection, while maintaining a minimum pin depth to optimize performance.

Compatible Network Analyzers

The 85056A calibration kits are intended to be used with the following Agilent network analyzers:

- 872*x* Series
- 8753 family
- PNA Series

If this calibration kit is used with other analyzers, the calibration constants must be manually entered into the analyzer. Refer to your network analyzer user's guide or embedded help system for instructions.

Options

The following option is available for the 85056A:

Option 910

This option adds an additional copy of the user's and service guide (this manual).

Equipment Required but Not Supplied

Connector cleaning supplies and various electrostatic discharge (ESD) protection devices are not supplied with the calibration kit but are required to ensure successful operation of the kit. Refer to Table 6-2 on page 6-3 for ordering information.

Incoming Inspection

Verify that the shipment is complete by referring to Table 6-1.

Check for damage. The foam-lined storage case provides protection during shipping. Verify that this case and its contents are not damaged.

If the case or any device appears damaged, or if the shipment is incomplete, contact Agilent Technologies. See page 5-4 for contact information. Agilent will arrange for repair or replacement of incomplete or damaged shipments without waiting for a settlement from the transportation company.

ManualsPlus.com

When you send the kit or device to Agilent, include a service tag (found near the end of this manual) with the following information:

- your company name and address
- the name of a technical contact person within your company, and the person's complete phone number
- the model number and serial number of the kit
- the part number and serial number of the device
- the type of service required
- a *detailed* description of the problem

ManualsPlus.com

Recording the Device Serial Numbers

In addition to the kit serial number, the devices in the kit are individually serialized (serial numbers are labeled onto the body of each device). Record these serial numbers in Table 1-1. Recording the serial numbers will prevent confusing the devices in this kit with similar devices from other kits.

The adapters included in the kit are for measurement convenience only and are not serialized.

Table 1-1 Serial Number Record for the 85056A

Device	Serial Number
Calibration kit	_____
Male open	_____
Female open	_____
Male short	_____
Female short	_____
Male broadband load	_____
Female broadband load	_____
Male sliding load	_____
Female sliding load	_____
Male-to-male 2.4 mm adapter	_____
Male-to-female 2.4 mm adapter	_____
Female-to-female 2.4 mm adapter	_____

ManualsPlus.com

Clarifying the Sex of a Connector

In this manual, calibration devices and adapters are referred to in terms of their connector interface. For example, a male open has a male connector.

However, during a measurement calibration, the network analyzer softkey menus label a calibration device with reference to the sex of the analyzers test port connector—not the calibration device connector. For example, the label `SHORT(F)` on the analyzers display refers to the short that is to be connected to the female test port. This will be a male short from the calibration kit.

A connector gages is referred to in terms of the connector that it measures. For instance, a male connector gage has a female connector on the gage so that it can measure male devices.

Preventive Maintenance

The best techniques for maintaining the integrity of the devices in the kit include:

- routine visual inspection
- cleaning
- proper gaging
- proper connection techniques

All of these are described in Chapter 3. Failure to detect and remove dirt or metallic particles on a mating plane surface can degrade repeatability and accuracy and can damage any connector mated to it. Improper connections, resulting from pin depth values being out of the observed limits (see Table 2-2 on page 2-4), or from bad connection techniques, can also damage these devices.

ManualsPlus.com

2 Specifications

ManualsPlus.com

Environmental Requirements

Table 2-1 Environmental Requirements

Parameter	Limits
Temperature	
Operating[a]	+20 °C to +26 °C
Storage	–40 °C to +75 °C
Error-corrected range[b]	± 1 °C of measurement calibration temperature
Altitude	
Operating	< 4,500 meters (≈15,000 feet)
Storage	< 15,000 meters (≈50,000 feet)
Relative humidity	Always non-condensing
Operating	0 to 80% (26 °C maximum dry bulb)
Storage	0 to 90%

a. The temperature range over which the calibration standards maintain conformance to their specifications.
b. The allowable network analyzer ambient temperature drift during measurement calibration and during measurements when the network analyzer error correction is turned on. Also, the range over which the network analyzer maintains its specified performance while correction is turned on.

Temperature—What to Watch Out For

Changes in temperature can affect electrical characteristics. Therefore, the operating temperature is a critical factor in performance. During a measurement calibration, the temperature of the calibration devices must be stable and within the range shown in Table 2-1.

IMPORTANT Avoid unnecessary handling of the devices during calibration because your fingers are a heat source.

ManualsPlus.com

Mechanical Characteristics

Mechanical characteristics such as center conductor protrusion and pin depth are *not* performance specifications. They are, however, important supplemental characteristics related to electrical performance. Agilent Technologies verifies the mechanical characteristics of the devices in the kit with special gaging processes and electrical testing. This ensures that the device connectors do not exhibit any center conductor protrusion or improper pin depth when the kit leaves the factory.

"Gaging Connectors" on page 3-6 explains how to use gages to determine if the kit devices have maintained their mechanical integrity. Refer to Table 2-2 on page 2-4 for typical and observed pin depth limits.

Pin Depth

Pin depth is the distance the center conductor mating plane differs from being flush with the outer conductor mating plane. See Figure 2-1. The pin depth of a connector can be in one of two states: either protruding or recessed.

Protrusion is the condition in which the center conductor extends beyond the outer conductor mating plane. This condition will indicate a positive value on the connector gage.

Recession is the condition in which the center conductor is set back from the outer conductor mating plane. This condition will indicate a negative value on the connector gage.

Figure 2-1 Connector Pin Depth

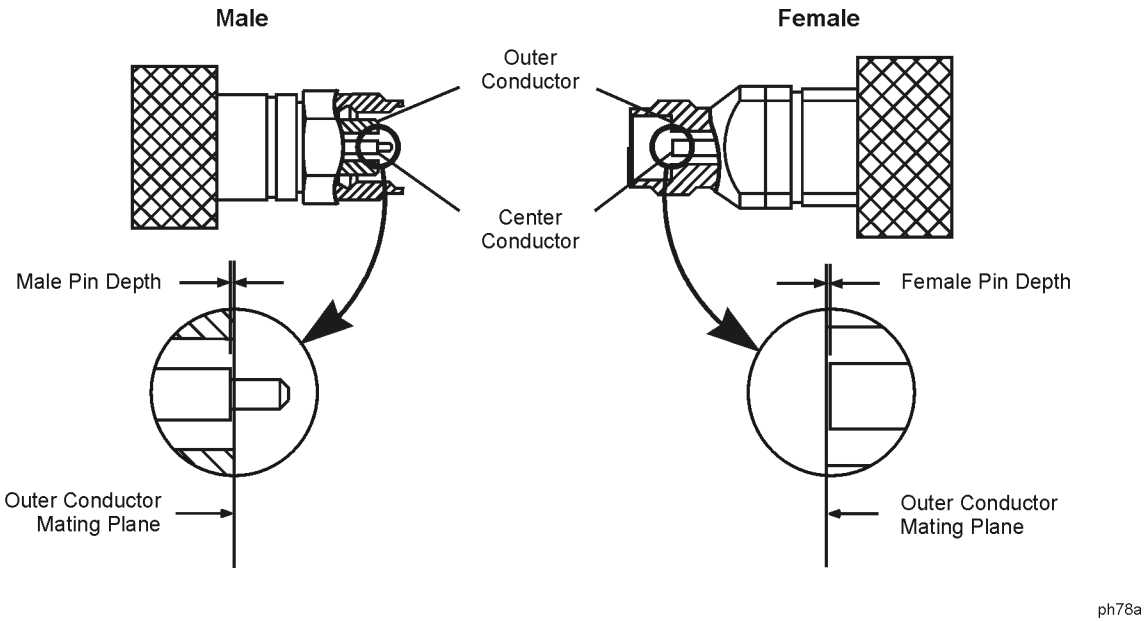

ManualsPlus.com

The pin depth value of each calibration device in the kit is not specified, but is an important mechanical parameter. The electrical performance of the device depends, to some extent, on its pin depth. The electrical specifications for each device in the kit take into account the effect of pin depth on the device's performance. Table 2-2 lists the typical pin depths and measurement uncertainties, and provides observed pin depth limits for the devices in the kit. If the pin depth of a device does not measure within the *observed* pin depth limits, it may be an indication that the device fails to meet electrical specifications. Refer to Figure 2-1 on page 2-3 for a visual representation of proper pin depth (slightly recessed).

Table 2-2 Pin Depth Limits

Device	Typical Pin Depth	Measurement Uncertainty[a]	Observed Pin Depth Limits[b]
Opens	0 to –0.0127 mm 0 to –0.00050 in	+0.0030 to –0.0030 mm +0.00012 to –0.00012 in	+0.0030 to –0.0157 mm +0.00012 to –0.00062 in
Shorts	0 to –0.0127 mm 0 to –0.00050 in	+0.0015 to –0.0015 mm +0.00006 to –0.00006 in	+0.0015 to –0.0142 mm +0.00006 to –0.00056 in
Fixed loads	–0.0025 to –0.0203 mm –0.00010 to –0.00080 in	+0.0030 to –0.0030 mm +0.00012 to –0.00012 in	+0.0005 to –0.0234 mm +0.00002 to –0.00092 in
Sliding loads	0 to –0.0127 mm 0 to –0.00050 in	+0.0015 to –0.0015 mm +0.00006 to –0.00006 in	+0.0015 to –0.0142 mm +0.00006 to –0.00056 in
Adapters	0 to –0.0381 mm 0 to –0.00150 in	+0.0030 to –0.0030 mm +0.00012 to –0.00012 in	+0.0030 to –0.0411 mm +0.00012 to –0.00162 in

a. Approximately +2 sigma to –2 sigma of gage uncertainty based on studies done at the factory according to recommended procedures.
b. Observed pin depth limits are the range of observation limits seen on the gage reading due to measurement uncertainty. The depth could still be within specifications.

ManualsPlus.com

Electrical Specifications

The electrical specifications in Table 2-3 apply to the devices in your calibration kit when connected with an Agilent precision interface.

Table 2-3 Electrical Specifications for 85056A 2.4 mm Devices

Device	Specification	Frequency (GHz)
Broadband loads	Return loss ≥ 42 dB (ρ ≤ 0.00794)	dc to ≤ 4
(male and female)	Return loss ≥ 34 dB (ρ ≤ 0.01995)	> 4 to ≤ 20
	Return loss ≥ 30 dB (ρ ≤ 0.03162)	> 20 to ≤ 26.5
	Return loss ≥ 26 dB (ρ ≤ 0.05019)	> 26.5 to ≤ 50
Sliding loads[a]	Return loss ≥ 42 dB (ρ ≤ 0.00794)	4 to ≤ 20
(male and female)	Return loss ≥ 40 dB (ρ ≤ 0.01000)	> 20 to ≤ 36
	Return loss ≥ 38 dB (ρ ≤ 0.01259)	> 36 to ≤ 40
	Return loss ≥ 36 dB (ρ ≤ 0.01585)	> 40 to ≤ 50
Adapters	Return loss ≥ 32 dB (ρ ≤ 0.02512)	dc to ≤ 4
	Return loss ≥ 30dB (ρ ≤ 0.03162)	> 4 to ≤ 26.5
	Return loss ≥ 25dB (ρ ≤ 0.05623)	> 26.5 to ≤ 40
	Return loss ≥ 20 dB (ρ ≤ 0.10000)	> 40 to ≤ 50
Offset opens[b]	± 0.5 ° deviation from nominal	dc to ≤ 2
(male and female)	± 1.25 ° deviation from nominal	> 2 to ≤ 20
	± 1.75 ° deviation from nominal	> 20 to ≤ 40
	± 2.25 ° deviation from nominal	> 40 to ≤ 50
Offset shorts[b]	± 0.50 ° deviation from nominal	dc to ≤ 2
(male and female)	± 1.25 ° deviation from nominal	> 2 to ≤ 20
	± 1.5 ° deviation from nominal	> 20 to ≤ 40
	± 2.0 ° deviation from nominal	> 40 to ≤ 50

a. The specifications for the sliding load termination include the quality of the airline portions within the sliding load combined with the effective stability of the sliding element.

b. The specifications for the opens and shorts are given as allowed deviation from the nominal model as defined in the standard definitions (see "Nominal Standard Definitions" on page A-8).

ManualsPlus.com

Certification

Agilent Technologies certifies that this product met its published specifications at the time of shipment from the factory. Agilent further certifies that its calibration measurements are traceable to the United States National Institute of Standards and Technology (NIST) to the extent allowed by the institute's calibration facility, and to the calibration facilities of other International Standards Organization members. See "How Agilent Verifies the Devices in Your Kit" on page 4-2 for more information.

ManualsPlus.com

3 Use, Maintenance, and Care of the Devices

ManualsPlus.com

Electrostatic Discharge

Protection against electrostatic discharge (ESD) is essential while connecting, inspecting, or cleaning connectors attached to a static-sensitive circuit (such as those found in test sets).

Static electricity can build up on your body and can easily damage sensitive internal circuit elements when discharged. Static discharges too small to be felt can cause permanent damage. Devices such as calibration components and devices under test (DUT), can also carry an electrostatic charge. To prevent damage to the test set, components, and devices:

- *Always* wear a grounded wrist strap having a 1 MΩ resistor in series with it when handling components and devices or when making connections to the test set.
- *Always* use a grounded antistatic mat in front of your test equipment.
- *Always* wear a heel strap when working in an area with a conductive floor. If you are uncertain about the conductivity of your floor, wear a heel strap.

Figure 3-1 shows a typical ESD protection setup using a grounded mat and wrist strap. Refer to Chapter 6, “Replaceable Parts,” for information on ordering supplies for ESD protection.

Figure 3-1 ESD Protection Setup

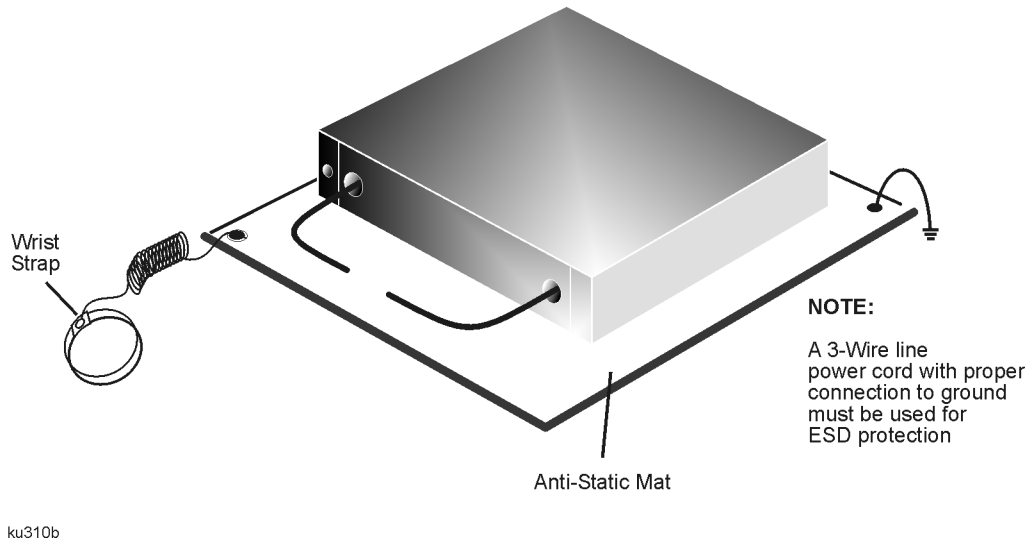

ManualsPlus.com

Visual Inspection

Visual inspection and, if necessary, cleaning should be done every time a connection is made. Metal particles from the connector threads may fall into the connector when it is disconnected. One connection made with a dirty or damaged connector can damage both connectors beyond repair.

In some cases, magnification is necessary to see damage to a connector; a magnifying device with a magnification of ≥ 10× is recommended. However, not all defects that are visible only under magnification will affect the electrical performance of the connector. Use the following guidelines when evaluating the integrity of a connector.

Look for Obvious Defects and Damage First

Examine the connectors first for obvious defects and damage: badly worn plating on the connector interface, deformed threads, or bent, broken, or misaligned center conductors. Connector nuts should move smoothly and be free of burrs, loose metal particles, and rough spots.

What Causes Connector Wear?

Connector wear is caused by connecting and disconnecting the devices. The more use a connector gets, the faster it wears and degrades. The wear is greatly accelerated when connectors are not kept clean, or are not connected properly.

Connector wear eventually degrades performance of the device. Calibration devices should have a long life if their use is on the order of a few times per week. Replace devices with worn connectors.

The test port connectors on the network analyzer test set may have many connections each day, and are therefore more subject to wear. It is recommended that an adapter be used as a test port saver to minimize the wear on the test set's test port connectors.

Inspect the Mating Plane Surfaces

Flat contact between the connectors at all points on their mating plane surfaces is required for a good connection. See Figure 2-1 on page 2-3. Look especially for deep scratches or dents, and for dirt and metal particles on the connector mating plane surfaces. Also look for signs of damage due to excessive or uneven wear or misalignment.

Light burnishing of the mating plane surfaces is normal, and is evident as light scratches or shallow circular marks distributed more or less uniformly over the mating plane surface. Other small defects and cosmetic imperfections are also normal. None of these affect electrical or mechanical performance.

If a connector shows deep scratches or dents, particles clinging to the mating plane surfaces, or uneven wear, clean and inspect it again. Devices with damaged connectors should be discarded. Determine the cause of damage before connecting a new, undamaged connector in the same configuration.

ManualsPlus.com

Inspect Female Connectors

Inspect the contact fingers in the female center conductor carefully. These can be bent or broken, and damage to them is not always easy to see. A connector with damaged contact fingers will not make good electrical contact and must be replaced.

NOTE This is particularly important when mating nonprecision to precision devices.

The female 2.4 mm connectors in this calibration kit are metrology-grade, precision slotless connectors (PSC). Precision slotless connectors are used to improve accuracy. With PSCs on test ports and standards, the accuracy achieved when measuring at 50 dB return loss levels is comparable to using conventional slotted connectors measuring devices having only 30 dB return loss. This represents an accuracy improvement of about 10 times.

Conventional female center conductors are slotted and, when mated, are flared by the male pin. Because physical dimensions determine connector impedance, this change in physical dimension affects electrical performance, making it very difficult to perform precision measurements with conventional slotted female connectors.

The precision slotless connector was developed to eliminate this problem. The PSC has a center conductor with a solid cylindrical shell, the outside diameter of which does not change when mated. Instead, this center conductor has an internal contact that flexes to accept the male pin.

Cleaning Connectors

Clean connectors are essential for ensuring the integrity of RF and microwave coaxial connections.

1. **Use Compressed Air or Nitrogen**

WARNING **Always use protective eyewear when using compressed air or nitrogen.**

Use compressed air (or nitrogen) to loosen particles on the connector mating plane surfaces. Clean air cannot damage a connector or leave particles or residues behind.

You can use any source of clean, dry, low-pressure compressed air or nitrogen that has an effective oil-vapor filter and liquid condensation trap placed just before the outlet hose.

Ground the hose nozzle to prevent electrostatic discharge, and set the air pressure to less than 414 kPa (60 psi) to control the velocity of the air stream. High-velocity streams of compressed air can cause electrostatic effects when directed into a connector. These electrostatic effects can damage the device. Refer to “Electrostatic Discharge” on page 3-2 earlier in this chapter for additional information.

ManualsPlus.com

2. **Clean the Connector Threads**

WARNING **Keep isopropyl alcohol away from heat, sparks, and flame. Store in a tightly closed container. It is extremely flammable. In case of fire, use alcohol foam, dry chemical, or carbon dioxide; water may be ineffective.**

Use isopropyl alcohol with adequate ventilation and avoid contact with eyes, skin, and clothing. It causes skin irritation, may cause eye damage, and is harmful if swallowed or inhaled. It may be harmful if absorbed through the skin. Wash thoroughly after handling.

In case of spill, soak up with sand or earth. Flush spill area with water.

Dispose of isopropyl alcohol in accordance with all applicable federal, state, and local environmental regulations.

Use a lint-free swab or cleaning cloth moistened with isopropyl alcohol to remove any dirt or stubborn contaminants on a connector that cannot be removed with compressed air or nitrogen. Refer to Table 6-2 on page 6-3 for part numbers for isopropyl alcohol and cleaning swabs.

a. Apply a small amount of isopropyl alcohol to a lint-free cleaning swab.

b. Clean the connector threads.

c. Let the alcohol evaporate, then blow the threads dry with a gentle stream of clean, low-pressure compressed air or nitrogen. Always completely dry a connector before you reassemble or use it.

3. **Clean the Mating Plane Surfaces**

a. Apply a small amount of isopropyl alcohol to a lint-free cleaning swab.

b. Clean the center and outer conductor mating plane surfaces. Refer to Figure 2-1 on page 2-3. When cleaning a female connector, avoid snagging the swab on the center conductor contact fingers by using short strokes.

c. Let the alcohol evaporate, then blow the connector dry with a gentle stream of clean, low-pressure compressed air or nitrogen. Always completely dry a connector before you reassemble or use it.

4. **Inspect**

Inspect the connector to make sure that no particles or residue remain. Refer to "Visual Inspection" on page 3-3.

ManualsPlus.com

Gaging Connectors

The gages provided with your calibration kit are intended for preventive maintenance and troubleshooting purposes only. See Table 6-1 on page 6-2 for part number information. They are effective in detecting excessive center conductor protrusion or recession, and conductor damage on DUTs, test accessories, and the calibration kit devices. Do not use the gages for precise pin depth measurements.

Connector Gage Accuracy

The connector gages are only capable of performing coarse measurements. They do not provide the degree of accuracy necessary to precisely measure the pin depth of the kit devices. This is partially due to the repeatability uncertainties that are associated with the measurement. Only the factory—through special gaging processes and electrical testing—can accurately verify the mechanical characteristics of the devices.

With proper technique, the gages are useful in detecting gross pin depth errors on device connectors. To achieve maximum accuracy, random errors must be reduced by taking the average of at least three measurements having different gage orientations on the connector. Even the resultant average can be in error by as much as ± 0.0001 inch due to systematic (biasing) errors usually resulting from worn gages and gage masters. The information in Table 2-2 on page 2-4 assumes new gages and gage masters. Therefore, these systematic errors were not included in the uncertainty analysis. As the gages undergo more use, the systematic errors can become more significant in the accuracy of the measurement.

The measurement uncertainties in Table 2-2 are primarily a function of the assembly materials and design, and the unique interaction each device type has with the gage. Therefore, these uncertainties can vary among the different devices. For example, note the difference between the uncertainties of the opens and shorts in Table 2-2.

The observed pin depth limits in Table 2-2 add these uncertainties to the typical factory pin depth values to provide practical limits that can be referenced when using the gages. See “Pin Depth” on page 2-3. Refer to “Kit Contents” on page 1-2 for more information on the design of the calibration devices in the kit.

NOTE When measuring pin depth, the measured value (resultant average of three or more measurements) is not the true value. Always compare the measured value with the observed pin depth limits in Table 2-2 to evaluate the condition of device connectors.

ManualsPlus.com

When to Gage Connectors

Gage a connector at the following times:

- Prior to using a device for the first time: record the pin depth measurement so that it can be compared with future readings. (It will serve as a good troubleshooting tool when you suspect damage may have occurred to the device.)
- If either visual inspection or electrical performance suggests that the connector interface may be out of typical range (due to wear or damage, for example).
- If a calibration device is used by someone else or on another system or piece of equipment.
- Initially after every 100 connections, and after that as often as experience indicates.

ManualsPlus.com

Gaging Procedures

Gaging 2.4 mm Connectors

NOTE Always hold a connector gage by the gage barrel, below the dial indicator. This gives the best stability, and improves measurement accuracy. (Cradling the gage in your hand or holding it by the dial applies stress to the gage plunger mechanism through the dial indicator housing.)

1. Select the proper gage for your connector. Refer to Table 6-1 on page 6-2 for gage part numbers.
2. Inspect and clean the gage, gage master, and device to be gaged. Refer to "Visual Inspection" and "Cleaning Connectors" earlier in this chapter.
3. Zero the connector gage (refer to Figure 3-2):
   a. While holding the gage by the barrel, and without turning the gage or the device, connect the gage to the gage master by interconnecting the male and female connectors. Connect the nut finger tight. Do not overtighten.
   b. Using an open-end wrench to keep the device body from rotating, use the torque wrench included in the kit to tighten the connecting nut to the specified torque. Refer to "Final Connection Using a Torque Wrench" on page 3-14 for additional information.
   c. As you watch the gage pointer, gently tap the barrel of the gage to settle the reading.

      The gage pointer should line up exactly with the zero mark on the gage. If not, adjust the zero set knob until the gage pointer lines up exactly with the zero mark.
   d. Remove the gage master.
4. Gage the device connector (refer to Figure 3-2):
   a. While holding the gage by the barrel, and without turning the gage or the device, connect the gage to the device by interconnecting the male and female connectors. Connect the nut finger-tight. Do not overtighten.
   b. Using an open-end wrench to keep the device body from rotating, use the torque wrench included in the kit to tighten the connecting nut to the specified torque. Refer to "Final Connection Using a Torque Wrench" on page 3-14 for additional information.
   c. Gently tap the barrel of the gage with your finger to settle the gage reading.
   d. Read the gage indicator dial. Read *only* the black ± signs; *not* the red ± signs.

      For maximum accuracy, measure the connector a minimum of three times and take an average of the readings. After each measurement, rotate the gage a quarter-turn to reduce measurement variations that result from the gage or the connector face not being exactly perpendicular to the center axis.
   e. Compare the average reading with the observed pin depth limits in Table 2-2 on page 2-4.

ManualsPlus.com

Figure 3-2 Gaging 2.4 mm Connectors

Note:

Although male devices are shown in this illustration,
the procedure is essentially the same for female devices.

Zero the Connector Gage

- Connect the gage to the gage master.
- Torque the connecting nut.
- Gently tap the gage barrel to settle the reading.
- Using the zero set knob, adjust the gage pointer to line up exactly with the zero mark.
- Remove the gage master.

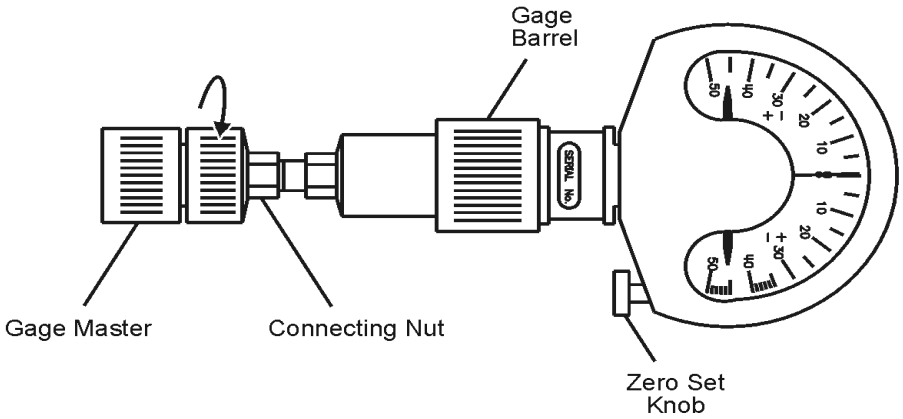

Gage the Device Connector

- Connect the gage to the device being measured.
- Torque the connecting nut.
- Gently tap the gage barrel to settle the reading.
- Read recession or protrusion from the gage.
- Remove the device.
- Repeat two additional times and average the three readings.

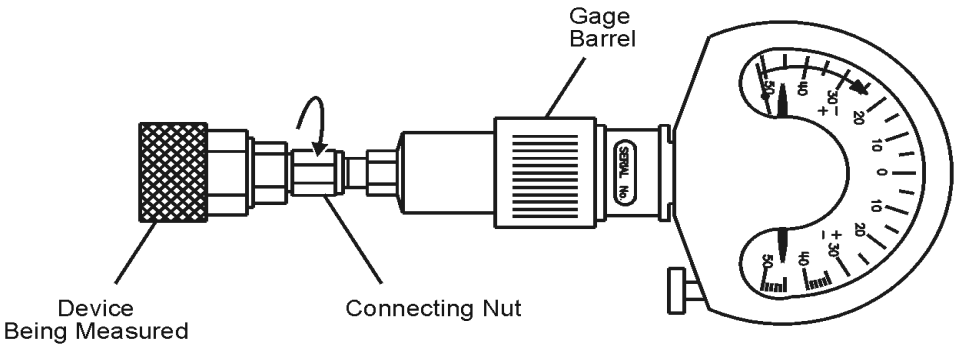

ph71a

ManualsPlus.com

Gaging the 2.4 mm Sliding Loads

Gage the sliding load before each use. If the sliding load pin depth is out of the observed pin depth limits listed in Table 2-2 on page 2-4, refer to "Adjusting the Sliding Load Pin Depth" on page 3-12.

NOTE Always hold a connector gage by the gage barrel, below the dial indicator. This gives the best stability, and improves measurement accuracy. (Cradling the gage in your hand or holding it by the dial applies stress to the gage plunger mechanism through the dial indicator housing.)

1. Select the proper gage for your connector. Refer to Table 6-1 on page 6-2 for gage part numbers.
2. Inspect and clean the gage, gage master, and device to be gaged. Refer to "Visual Inspection" on page 3-3 and "Cleaning Connectors" on page 3-4 earlier in this chapter.
3. Zero the connector gage (refer to Figure 3-2 on page 3-9):
   a. While holding the gage by the barrel, and without turning the gage or the device, connect the gage to the gage master by interconnecting the male and female connectors. Connect the nut finger-tight. Do not overtighten.
   b. Using an open-end wrench to keep the device body from rotating, use the torque wrench included in the kit to tighten the connecting nut to the specified torque. Refer to "Final Connection Using a Torque Wrench" on page 3-14 for additional information.
   c. As you watch the gage pointer, gently tap the barrel of the gage to settle the reading.

      The gage pointer should line up exactly with the zero mark on the gage. If not, adjust the zero set knob until the gage pointer lines up exactly with the zero mark.
   d. Remove the gage master.
4. Gage the sliding load connector (refer to Figure 3-3):
   a. Unlock the center conductor pullback mechanism by raising the pullback handle to the unlocked position.
   b. Carefully move the pullback mechanism toward the connector end of the sliding load. The center conductor will extend beyond the end of the connector. Continue to hold the pullback mechanism in this position.
   c. Pull the sliding ring back approximately 0.5 in and install a centering bead in the connector end of the sliding load.

CAUTION The sliding load center conductor can be damaged if the sliding load is not in alignment with the mating connector while making the connection.

   d. Keep the center conductor extended by holding the center conductor pullback mechanism toward the connector end of the sliding load. Align the sliding load with the mating connector on the gage and mate the sliding load center conductor with the gage center conductor.

ManualsPlus.com

e. Release the center conductor pullback mechanism and move the body of the sliding load toward the gage to mate the outer conductor of the sliding load connector with the outer conductor of the gage connector.

f. Without turning the gage or the sliding load, connect the gage to the sliding load being measured by interconnecting the male and female connectors. Connect the nut finger-tight. Do not overtighten.

g. Using an open-end wrench to keep the device body from rotating, use the torque wrench included in the kit to tighten the connecting nut to the specified torque. Refer to "Final Connection Using a Torque Wrench" on page 3-14 for additional information.

CAUTION Always move the center conductor pullback mechanism back before locking the handle. Do not force the handle past the locked position.

---

h. Move the center conductor pullback mechanism back (away from the connector end of the sliding load), and place the pullback handle in its locked position.

i. Gently tap the barrel of the gage with your finger to settle the gage reading.

j. Read the gage indicator dial. Read *only* the black ± signs; *not* the red ± signs.

For maximum accuracy, measure the connector a minimum of three times and take an average of the readings. Use different orientations of the gage within the connector. After each measurement, rotate the gage a quarter-turn to reduce measurement variations that result from the gage or the connector face not being exactly perpendicular to the center axis.

k. Compare the average reading with the observed pin depth limits in Table 2-2 on page 2-4. If the pin depth is outside the limits, it must be adjusted before proceeding. Refer to "Adjusting the Sliding Load Pin Depth" on page 3-12.

Figure 3-3 Gaging the 2.4 mm Sliding Loads

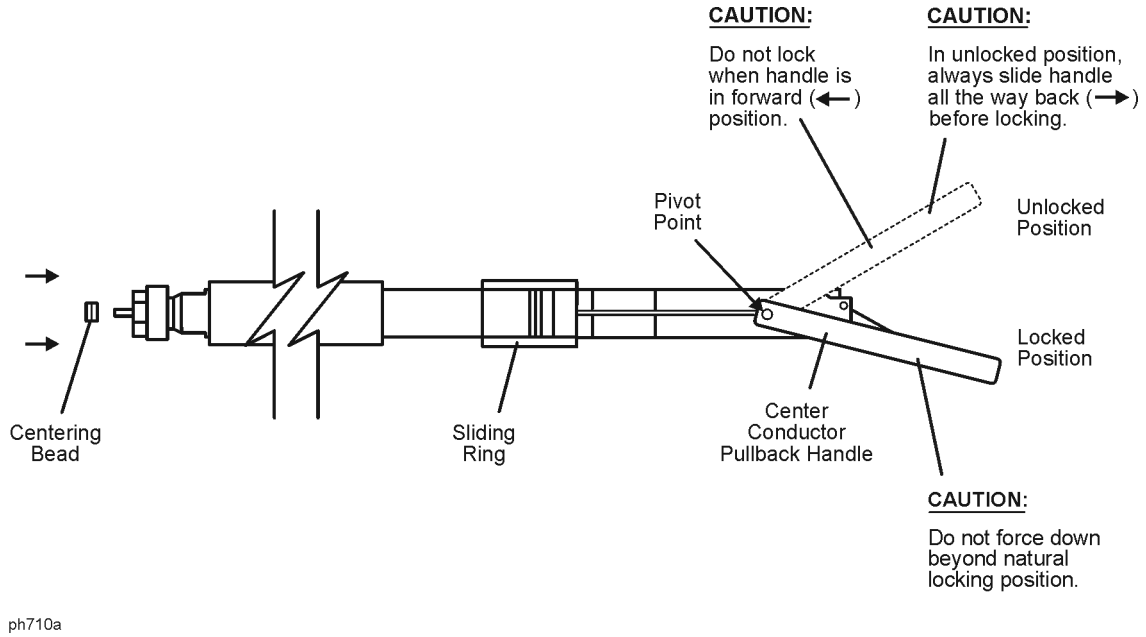

ManualsPlus.com

l. Without turning the gage or the sliding load, loosen the connection between the gage and the sliding load and remove the sliding load from the gage.

CAUTION Remove the centering bead immediately after gaging the sliding load pin depth. Damage can occur to the sliding load during the removal of a centering bead that has slipped too far into the sliding load. The sliding load will not perform to its specifications if the centering bead is not removed before an electrical calibration is performed.

m. Carefully remove the centering bead from the sliding load. If the centering bead does not come out of the sliding load easily:

   i. Unlock the center conductor pullback handle and move the center conductor pullback mechanism toward the connector end of the sliding load to extend the center conductor.

   ii. While holding the center conductor pullback mechanism toward the connector end of the sliding load, remove the centering bead.

   If the centering bead still will not come out:

   i. Hold the sliding load with the connector end pointed downward.

   ii. Move the sliding ring up, then quickly down. The trapped air behind the centering bead should eject it.

   Return the center conductor pullback mechanism to the rear of the sliding load and return the pullback handle to its locked position.

Adjusting the Sliding Load Pin Depth

The sliding loads in this kit have a setback mechanism that allows the pin depth to be set to any desired value. The pin depth of the sliding load is preset at the factory. *The pin depth should not have to be reset each time the sliding load is used*, but it should be checked before each use.

If the pin depth is outside the *observed* limits listed in Table 2-2 on page 2-4, use the following procedure to reset it to the nominal value of –0.00381 mm (–0.00015 in).

This procedure assumes that you were directed here from "Gaging the 2.4 mm Sliding Loads" on page 3-10. If not, perform the steps in that procedure before performing this procedure.

1. The gage should be attached to the sliding load. Refer to "Gaging the 2.4 mm Sliding Loads" on page 3-10 if necessary.
2. The face of the gage and the label on the sliding load should be facing up.
3. The center conductor pullback handle should be in the locked position.
4. With a small screwdriver, gently turn the center conductor pin depth adjustment screw until the gage pointer reads –0.00381 mm (–0.00015 in). Refer to Figure 3-4 for the location of the adjustment screw.
5. Wait approximately five minutes to allow the temperature to stabilize. Do not touch either the gage or the sliding load during this time.

ManualsPlus.com

6. Note the gage reading. If it is no longer within the allowable range, perform step 4 again.
7. Move the center conductor pullback handle to the unlocked position and then back to the locked position. The gage reading should return to the value previously set. If not, repeat steps 4 through 7.
8. Return to "Gaging the 2.4 mm Sliding Loads" on page 3-10.

Figure 3-4 Adjusting the Sliding Load Pin Depth

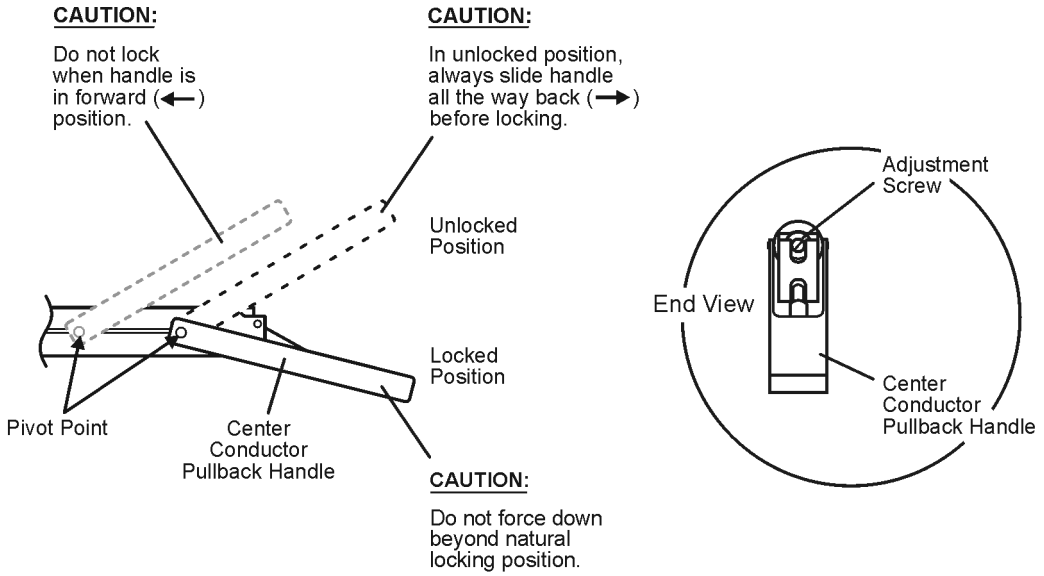

ManualsPlus.com

Connections

Good connections require a skilled operator. *The most common cause of measurement error is bad connections.* The following procedures illustrate how to make good connections.

How to Make a Connection

Preliminary Connection

1. Ground yourself and all devices. Wear a grounded wrist strap and work on a grounded, conductive table mat. Refer to "Electrostatic Discharge" on page 3-2 for ESD precautions.
2. Visually inspect the connectors. Refer to "Visual Inspection" on page 3-3.
3. If necessary, clean the connectors. Refer to "Cleaning Connectors" on page 3-4.
4. Use a connector gage to verify that all center conductors are within the observed pin depth values in Table 2-2 on page 2-4. Refer to "Gaging Connectors" on page 3-6.
5. Carefully align the connectors. The male connector center pin must slip concentrically into the contact finger of the female connector.
6. Push the connectors straight together and tighten the connector nut finger tight.

CAUTION Do *not* turn the device body. Only turn the connector nut. Damage to the center conductor can occur if the device body is twisted.

Do *not* twist or screw the connectors together. As the center conductors mate, there is usually a slight resistance.

7. The preliminary connection is tight enough when the mating plane surfaces make uniform, light contact. Do not overtighten this connection.

   A connection in which the outer conductors make gentle contact at all points on both mating surfaces is sufficient. Very light finger pressure is enough to accomplish this.
8. Make sure the connectors are properly supported. Relieve any side pressure on the connection from long or heavy devices or cables.

Final Connection Using a Torque Wrench

Use a torque wrench to make a final connection. Table 3-1 provides information about the torque wrench recommended for use with the calibration kit. A torque wrench is included in the calibration kit. Refer to Table 6-1 on page 6-2 for replacement part number and ordering information.

Table 3-1 Torque Wrench Information

Connector Type	Torque Setting	Torque Tolerance
2.4 mm	90 N-cm (8 in-lb)	± 9.0 N-cm (± 0.8 in-lb)

ManualsPlus.com

Using a torque wrench guarantees that the connection is not too tight, preventing possible connector damage. It also guarantees that all connections are equally tight each time.

Prevent the rotation of anything other than the connector nut that you are tightening. It may be possible to do this by hand if one of the connectors is fixed (as on a test port). However, it is recommended that you use an open-end wrench to keep the body of the device from turning.

1. Position both wrenches within 90 degrees of each other before applying force. See Figure 3-5. Wrenches opposing each other (greater than 90 degrees apart) will cause a lifting action which can misalign and stress the connections of the devices involved. This is especially true when several devices are connected together.

Figure 3-5 Wrench Positions

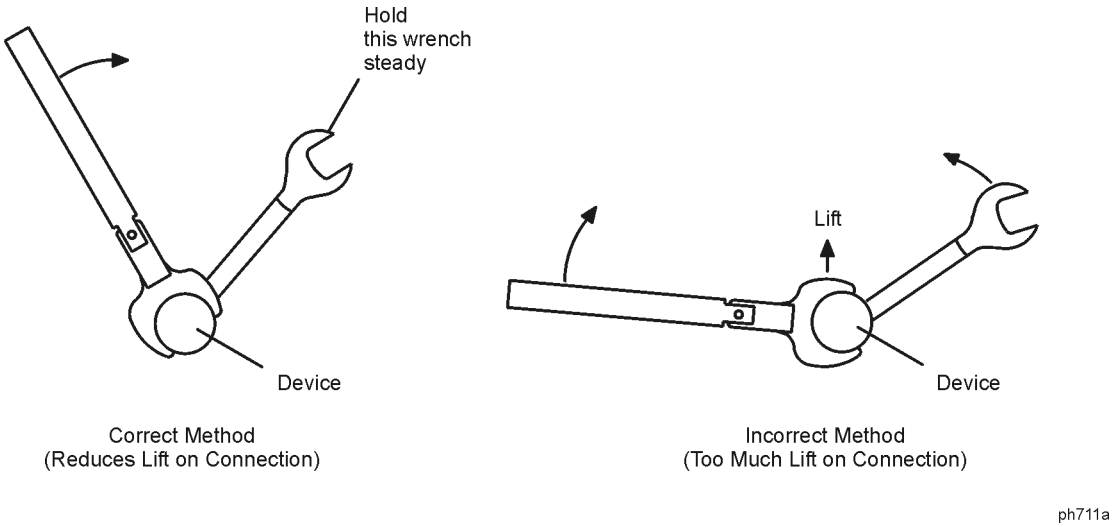

2. Hold the torque wrench lightly, at the end of the handle only (beyond the groove). See Figure 3-6.

Figure 3-6 Using the Torque Wrench

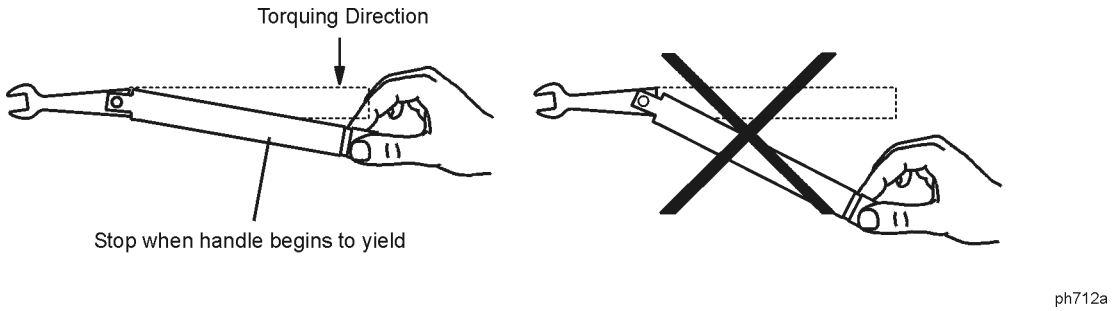

3. Apply downward force perpendicular to the wrench handle. This applies torque to the connection through the wrench.

   Do not hold the wrench so tightly that you push the handle straight down along its length rather than pivoting it, otherwise you apply an unknown amount of torque.

ManualsPlus.com

4. Tighten the connection just to the torque wrench break point. The wrench handle gives way at its internal pivot point. See Figure 3-6 on page 3-15. Do not tighten the connection further.

CAUTION You don't have to fully break the handle of the torque wrench to reach the specified torque; doing so can cause the handle to kick back and loosen the connection. Any give at all in the handle is sufficient torque.

Connecting the Sliding Load

1. Unlock the center conductor pullback mechanism by raising the pullback handle to the unlocked position. Refer to Figure 3-7.
2. Carefully move the pullback mechanism toward the connector end of the sliding load. The center conductor will extend beyond the end of the conductor. Continue to hold the pullback mechanism in this position.

CAUTION The sliding load center conductor can be damaged if the sliding load is not in alignment with the mating connector while making the connection.

3. Keep the center conductor extended by holding the center conductor pullback mechanism toward the connector end of the sliding load. Align the sliding load with the mating connector on the cable or test port to which it is being connected and mate the sliding load center conductor with the center conductor of the cable or test port.
4. Release the center conductor pullback mechanism and move the body of the sliding load toward the cable or test port to mate the outer conductor of the sliding load connector to the outer conductor of the cable or test port connector.
5. Without turning the sliding load, connect the sliding load to the cable or test port by interconnecting the male and female connectors. Connect the nut finger-tight. Do not overtighten.
6. Using an open-end wrench to keep the device body from rotating, use the torque wrench included in the kit to tighten the connecting nut to the specified torque. Refer to "Final Connection Using a Torque Wrench" on page 3-14 for additional information.

CAUTION Always move the center conductor pullback mechanism back before locking the handle. Do not force the handle past the locked position.

7. Move the center conductor pullback mechanism back (away from the connector end of the sliding load), and place the pullback handle in its locked position.

ManualsPlus.com

Figure 3-7 Connecting the Sliding Load

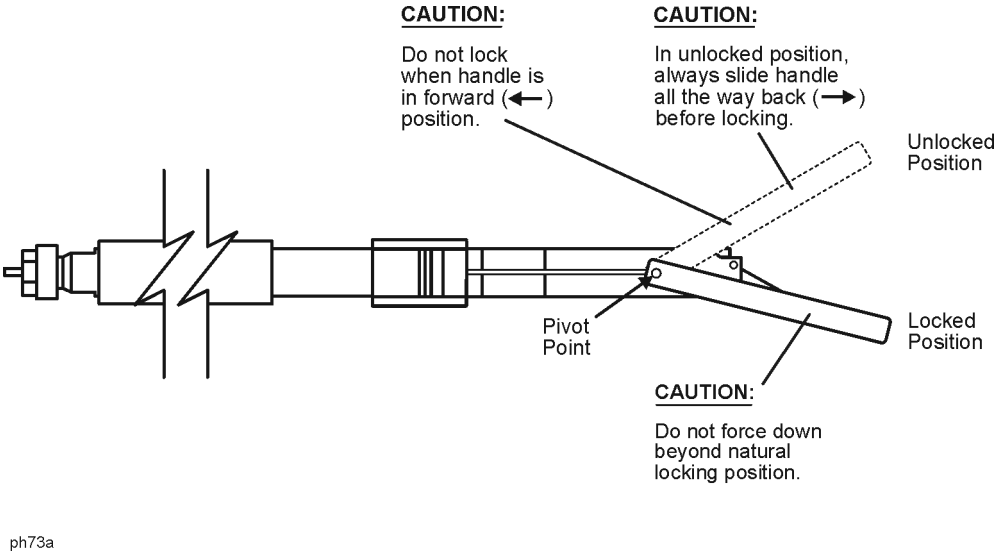

How to Separate a Connection

To avoid lateral (bending) force on the connector mating plane surfaces, always support the devices and connections.

CAUTION Do *not* turn the device body. Only turn the connector nut. Damage to the center conductor can occur if the device body is twisted.

If disconnecting a sliding load, leave the center conductor pullback handle in the locked position.

1. Use an open-end wrench to prevent the device body from turning.
2. Use another open-end wrench to loosen the connecting nut.
3. Complete the separation by hand, turning only the connecting nut.
4. Pull the connectors straight apart without twisting, rocking, or bending either of the connectors.

ManualsPlus.com

Using the Sliding Load

When performing a sliding load calibration, it is recommended that the sliding ring be set at the marked positions (rings) along the sliding load body. Using the set marks ensures that a broad distribution of phase angles is selected, thereby optimizing the calibration.

The set marks function as detents so that the internal center of the sliding ring can mate with them. Because of this, the set mark being used cannot be seen but is felt as the sliding ring is moved from mark to mark during a calibration. Moving the sliding ring with only the index fingers of both hands will increase your ability to detect the sliding ring detent at each position.

To perform a sliding load calibration, refer to your network analyzers user's documentation for instructions.

Figure 3-8 Sliding Load Set Marks

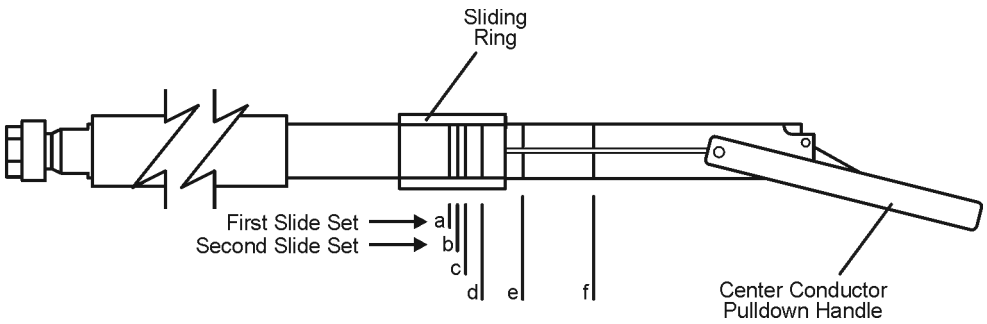

ph74a

Handling and Storage

- *Do* install the protective end caps and store the calibration devices in the foam-lined storage case when not in use.
- *Do* keep connectors clean.
- *Do not* touch mating plane surfaces. Natural skin oils and microscopic particles of dirt are easily transferred to a connector interface and are very difficult to remove.
- *Do not* set connectors contact-end down on a hard surface. The plating and the mating plane surfaces can be damaged if the interface comes in contact with any hard surface.
- *Do not* store connectors loose in a box, or in a desk or bench drawer. This is the most common cause of connector damage during storage.

ManualsPlus.com

4 Performance Verification

ManualsPlus.com

Introduction

The performance of your calibration kit can only be verified by returning the kit to Agilent Technologies for recertification. The equipment required to verify the specifications of the devices in the kit has been specially manufactured and is not commercially available.

How Agilent Verifies the Devices in Your Kit

Agilent verifies the specifications of these devices as follows:

1. The residual microwave error terms of the test system are verified with precision airlines and shorts that are directly traced to the National Institute of Standards and Technology (NIST). The airline and short characteristics are developed from mechanical measurements. The mechanical measurements and material properties are carefully modeled to give very accurate electrical representation. The mechanical measurements are then traced to NIST through various plug and ring gages and other mechanical measurements.
2. Each calibration device is electrically tested on this system. For the initial (before sale) testing of the calibration devices, Agilent includes the test measurement uncertainty as a guardband to guarantee each device meets the published specification. For recertifications (after sale), no guardband is used and the measured data is compared directly with the specification to determine the pass or fail status. The measurement uncertainty for each device is, however, recorded in the calibration report that accompanies recertified kits.

These two steps establish a traceable link to NIST for Agilent to the extent allowed by the institute's calibration facility. The specifications data provided for the devices in the kit is traceable to NIST through Agilent Technologies.

ManualsPlus.com

Recertification

The following will be provided with a recertified kit:

- a new calibration sticker affixed to the case
- a certificate of calibration
- a calibration report for each device in the kit listing measured values, specifications, and uncertainties

NOTE A list of NIST traceable numbers may be purchased upon request to be included in the calibration report.

Agilent Technologies offers a *Standard* calibration for the recertification of the kit. For more information, contact Agilent Technologies. See Table 5-1 on page 5-4 for contact information.

How Often to Recertify

The suggested initial interval for recertification is 12 months or sooner. The actual need for recertification depends on the use of the kit. After reviewing the results of the initial recertification, you may establish a different recertification interval that reflects the usage and wear of the kit.

NOTE The recertification interval should begin on the date the kit is *first used* after the recertification date.

Where to Send a Kit for Recertification

Contact Agilent Technologies for information on where to send your kit for recertification. Contact information is listed on page 5-4. Refer to "Returning a Kit or Device to Agilent" on page 5-3 for details on sending your kit.

ManualsPlus.com

ManualsPlus.com

5 Troubleshooting

ManualsPlus.com

Troubleshooting Process

If you suspect a bad calibration, or if your network analyzer does not pass performance verification, follow the steps in Figure 5-1.

Figure 5-1 Troubleshooting Flowchart

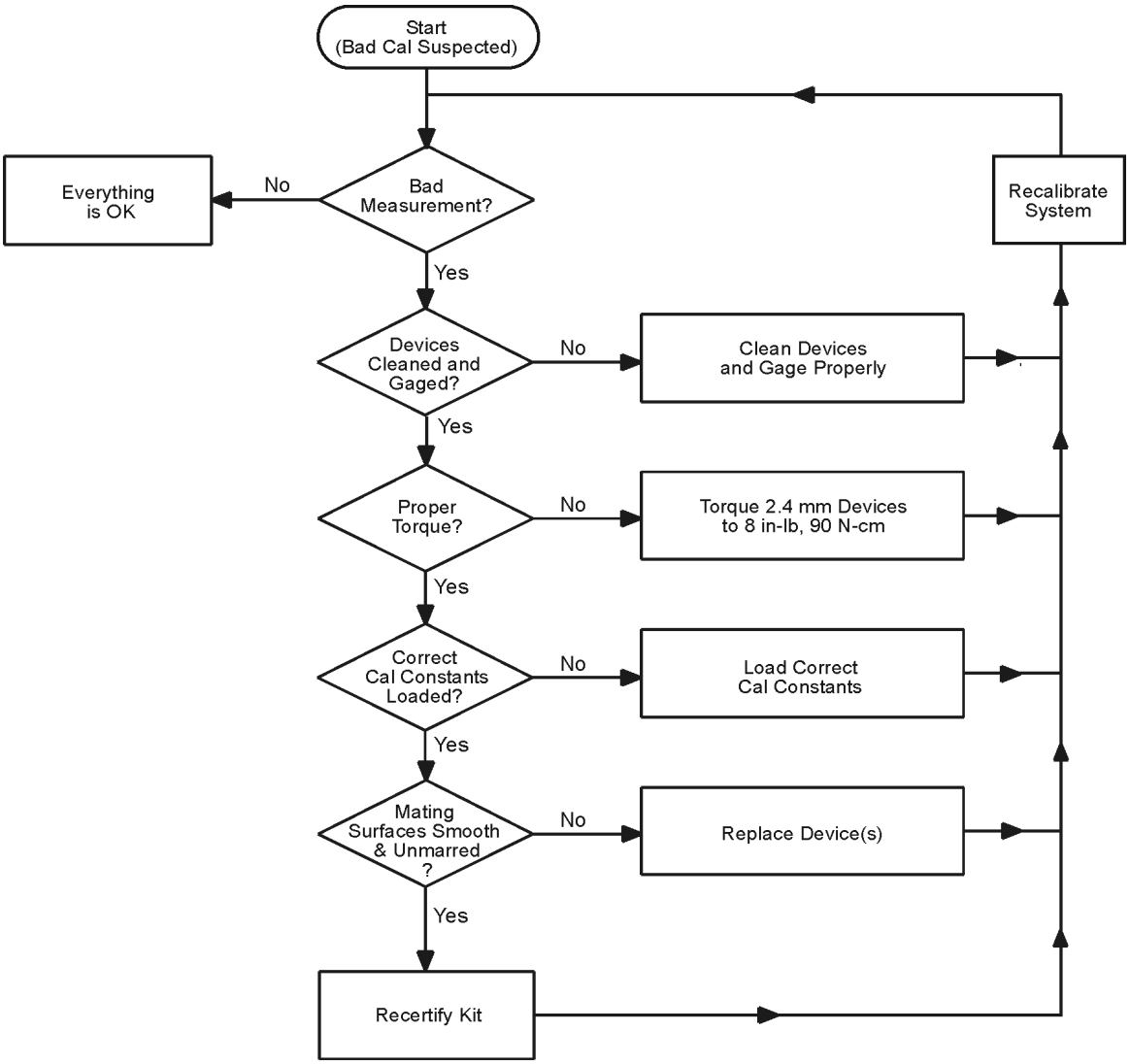

ph75a

ManualsPlus.com

Returning a Kit or Device to Agilent

If your kit or device requires service, contact Agilent Technologies for information on where to send it. See Table 5-1 for contact information. Include a service tag (located near the end of this manual) on which you provide the following information:

- your company name and address
- a technical contact person within your company, and the person's complete phone number
- the model number and serial number of the kit
- the part number and serial number of each device
- the type of service required
- a *detailed* description of the problem and how the device was being used when the problem occurred (such as calibration or measurement)

Contacting Agilent

Table 5-1 Contacting Agilent

Online assistance: www.agilent.com/find/assist			
United States *(tel)* 1 800 452 4844	**Latin America** *(tel)* (305) 269 7500 *(fax)* (305) 269 7599	**Canada** *(tel)* 1 877 894 4414 *(fax)* (905) 282-6495	**Europe** *(tel)* (+31) 20 547 2323 *(fax)* (+31) 20 547 2390
New Zealand *(tel)* 0 800 738 378 *(fax)* (+64) 4 495 8950	**Japan** *(tel)* (+81) 426 56 7832 *(fax)* (+81) 426 56 7840	**Australia** *(tel)* 1 800 629 485 *(fax)* (+61) 3 9210 5947	**Singapore** *(tel)* 1 800 375 8100 *(fax)* (65) 836 0252
Malaysia *(tel)* 1 800 828 848 *(fax)* 1 800 801 664	**Philippines** *(tel)* (632) 8426802 *(tel) (PLDT subscriber only):* 1 800 16510170 *(fax)* (632) 8426809 *(fax) (PLDT subscriber only):* 1 800 16510288	**Thailand** *(tel) outside Bangkok:* (088) 226 008 *(tel) within Bangkok:* (662) 661 3999 *(fax)* (66) 1 661 3714	**Hong Kong** *(tel)* 800 930 871 *(fax)* (852) 2506 9233
Taiwan *(tel)* 0800-047-866 *(fax)* (886) 2 25456723	**People's Republic of China** *(tel) (preferred):* 800-810-0189 *(tel) (alternate):* 10800-650-0021 *(fax)* 10800-650-0121	**India** *(tel)* 1-600-11-2929 *(fax)* 000-800-650-1101	

ManualsPlus.com

ManualsPlus.com

6 Replaceable Parts

ManualsPlus.com

Introduction

Table 6-1 lists the replacement part numbers for items included in the 85056A calibration kit and Figure 6-1 and Figure 6-2 illustrate each of these items.

Table 6-2 lists the replacement part numbers for items not included in the calibration kit that are either required or recommended for successful operation of the kit.

To order a listed part, note the description, the part number, and the quantity desired. Telephone or send your order to Agilent Technologies. See Table 5-1 on page 5-3 for contact information.

Table 6-1 Replaceable Parts for the 85056A Calibration Kit

Description	Qty per kit	Agilent Part Number
Calibration Devices (2.4 mm)		
Male broadband load	1	00901-60003
Female broadband load	1	00901-60004
Male sliding load	1	00915-60003
Female sliding load	1	00915-60004
Male offset open	1	85056-60022
Female offset open	1	85056-60023
Male offset short	1	85056-60020
Female offset short	1	85056-60021
Adapters (2.4 mm)		
Male to male	1	85056-60005
Male to female	1	85056-60006
Female to female	1	85056-60007
Connector Gages (2.4 mm)		
Male gage set (includes gage master)	1	11752-60108
Female gage set (includes gage master)	1	11752-60107
Centering bead (for gaging the 2.4 mm sliding loads)	1	85056-20001
Calibration Kit Storage Case		
Box (including foam pads)	1	85056-60014
Box (without foam pads)	1	5180-8419
Foam pad (for lid)	1	5181-5542
Foam pad (for lower case)	1	85056-80009

ManualsPlus.com

Table 6-1 Replaceable Parts for the 85056A Calibration Kit

Description	Qty per kit	Agilent Part Number
Wrenches		
5/16 in, 90 N-cm (8 in-lb) torque wrench	1	8710-1765
7 mm open-end wrench	1	8710-1761
Miscellaneous Items		
Calibration definitions disk (8510 and 872*x*)	1	85056-10003
Calibration definitions disk (PNA series)	1	85056-10009
Specifications and performance verification disk	1	08510-10033
User's and service guide	1	85056-90020

Table 6-2 Items Not Included in the Calibration Kit

Description	Qty	Agilent Part Number
Open-End Wrench		
5/16 in open-end wrench	1	8720-0015
ESD Protection Devices		
Grounding wrist strap	1	9300-1367
5 ft grounding cord for wrist strap	1	9300-0980
2 ft by 4 ft conductive table mat with 15 ft grounding wire	1	9300-0797
ESD heel strap	1	9300-1308
Connector Cleaning Supplies		
Isopropyl alcohol	30 ml	8500-5344
Foam-tipped cleaning swabs	100	9301-1243

ManualsPlus.com

Figure 6-1 Replaceable Parts for the 85056A Calibration Kit

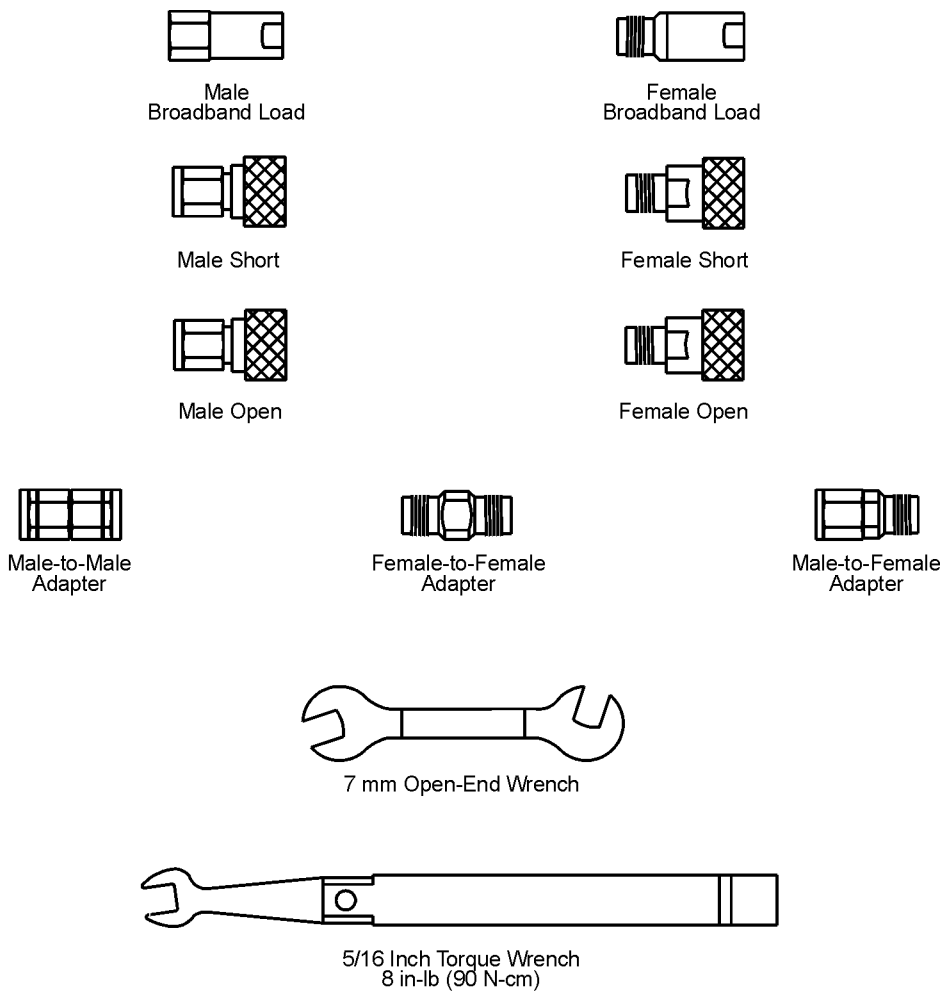

NOT SHOWN:

- Calibration constants disks
- Specifications and performance verification disk
- User's and service guide
- Storage case

ph713a

ManualsPlus.com

Figure 6-2 Replaceable Parts for the 85056A Calibration Kit

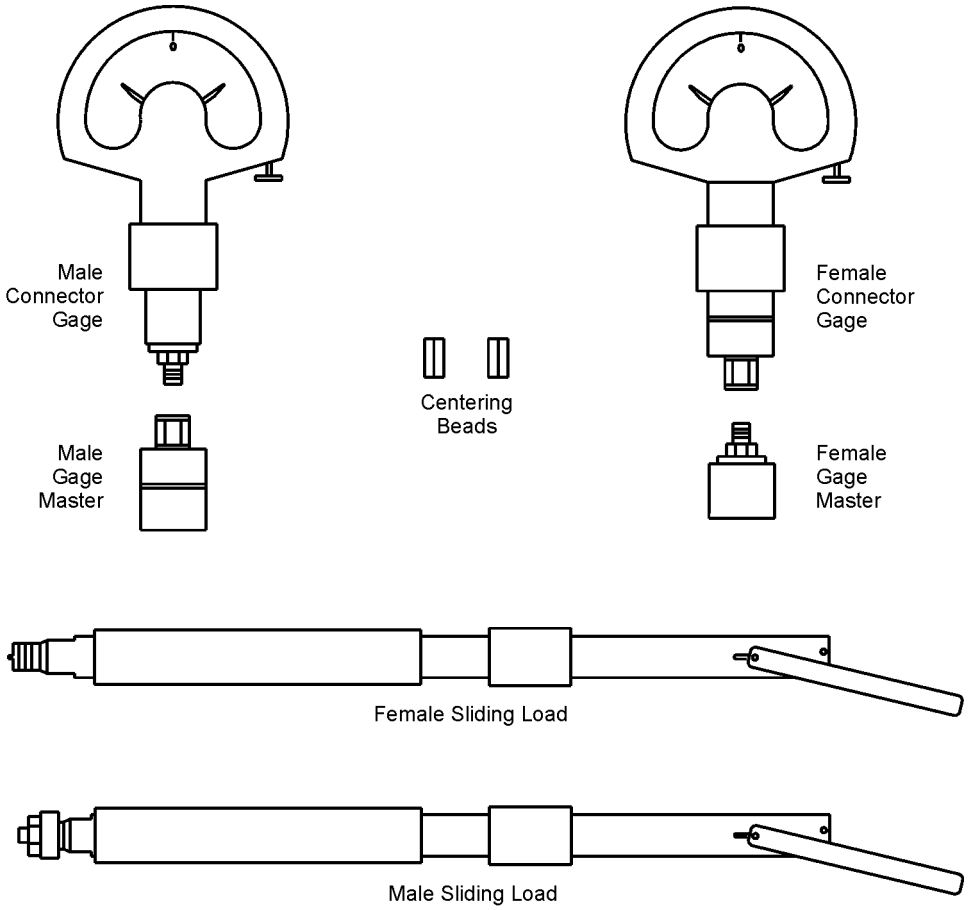

ph77a

ManualsPlus.com

ManualsPlus.com

A Standard Definitions

ManualsPlus.com

Standard Class Assignments

Class assignment organizes calibration standards into a format compatible with the error models used in the measurement calibration. A class or group of classes corresponds to the systematic errors to be removed from the measured network analyzer response. Tables A-1 through A-3 list the classes of the devices in the kit for various network analyzers. This information resides on the calibration data included in the kit.

Table A-1 Standard Class Assignments for the 8510 Network Analyzer

Disk File Name: CK_24MMA4					**Calibration Kit Label: 2.4 mm A.4**			
Class	**A**	**B**	**C**	**D**	**E**	**F**	**G**	**Standard Class Label**
$S_{11}A$	2							Open
$S_{11}B$	1							Short
$S_{11}C$	9	10	12					Loads
$S_{22}A$	2							Open
$S_{22}B$	1							Short
$S_{22}C$	9	10	12					Loads
Forward transmission	11							Thru
Reverse transmission	11							Thru
Forward match	11							Thru
Reverse match	11							Thru
Forward isolation[a]	9							Isol'n Std
Reverse isolation	9							Isol'n Std
Frequency response	1	2	11					Response
TRL thru	14							Undefined
TRL reflect	1							Undefined
TRL line	15	16	17					Undefined
Adapter	13							Adapter
TRL Option								
Cal Z_0: _____ System Z_0 __X__ Line Z_0								
Set ref: __X__ Thru ____ Reflect								
Lowband frequency: _____								

a. The forward isolation standard is also used for the isolation part of the response and isolation calibration.

ManualsPlus.com

Table A-2 Standard Class Assignments for the 872*x* Series Network Analyzer

Calibration Kit Label: 2.4 mm								
Class	**A**	**B**	**C**	**D**	**E**	**F**	**G**	**Standard Class Label**
$S_{11}A$	2							Open
$S_{11}B$	1							Short
$S_{11}C$	3	5	6					Loads
$S_{22}A$	2							Open
$S_{22}B$	1							Short
$S_{22}C$	3	5	6					Loads
Forward transmission	4							Thru
Reverse transmission	4							Thru
Forward match	4							Thru
Reverse match	4							Thru
Response	1	2	4					Response
Response & isolation	1	2	4					Response
TRL thru	4							Undefined
TRL reflect	2							Undefined
TRL line	3	5	6					Undefined
TRL Option								
Cal Z_0: _____ System Z_0 __X__ Line Z_0								
Set ref: __X__ Thru ____ Reflect								

ManualsPlus.com

Table A-3 Standard Class Assignments for the PNA Series Network Analyzer

Calibration Kit Label: 2.4 mm Model 85056A	
Class	**A**
$S_{11}A$	2
$S_{11}B$	1
$S_{11}C$	3, 5, 6
$S_{21}T$	4
$S_{22}A$	2
$S_{22}B$	1
$S_{22}C$	3, 5, 6
$S_{12}T$	4
TRL ‘T’	4
TRL ‘R’	2
TRL ‘L’	3, 5, 6

Notes:

1. **If you are performing a TRL calibration:**
   - $S_{21}T$ and $S_{12}T$ must be defined as *thru* standards.
   - $S_{11}A$ and $S_{22}A$ must be defined as *reflection* standards.
   - $S_{11}B$, $S_{11}C$, $S_{22}B$, and $S_{22}C$ must be defined as *line* standards.
2. **If you are performing a TRM calibration:**
   - $S_{21}T$ and $S_{12}T$ must be defined as *thru* standards.
   - $S_{11}A$ and $S_{22}A$ must be defined as *reflection* standards.
   - $S_{11}B$, $S_{11}C$, $S_{22}B$, and $S_{22}C$ must be defined as *match* standards.
3. **If you are performing an LRM calibration:**
   - $S_{21}T$ and $S_{12}T$ must be defined as *line* standards.
   - $S_{11}A$ and $S_{22}A$ must be defined as *reflection* standards.
   - $S_{11}B$, $S_{11}C$, $S_{22}B$, and $S_{22}C$ must be defined as *match* standards.
4. **$S_{11}B$ and $S_{11}C$ must be defined as the same standard.**
5. **$S_{22}B$ and $S_{22}C$ must be defined as the same standard**.

For additional information on performing TRL, TRM, and LRM calibrations, refer to your PNA series network analyzer embedded help system.

ManualsPlus.com

Blank Forms

The standard class assignments may be changed to meet your specific requirements. Tables A-4 through A-5 are provided to record the modified standard class assignments.

Table A-4 Blank Form for the 8510 Network Analyzer

Disk File Name: _____								Calibration Kit Label: _____
Class	**A**	**B**	**C**	**D**	**E**	**F**	**G**	**Standard Class Label**
$S_{11}A$								
$S_{11}B$								
$S_{11}C$								
$S_{22}A$								
$S_{22}B$								
$S_{22}C$								
Forward transmission								
Reverse transmission								
Forward match								
Reverse match								
Forward isolation[a]								
Reverse isolation								
Frequency response								
TRL thru								
TRL reflect								
TRL line								
Adapter								
TRL Option								
Cal Z_0: _____ System Z_0			_____ Line Z_0					
Set ref: _____ Thru			_____ Reflect					
Lowband frequency: _____								

a. The forward isolation standard is also used for the isolation part of the response and isolation calibration.

ManualsPlus.com

Table A-5 Blank Form for the 872*x* Series Network Analyzer

Calibration Kit Label: _____								
Class	**A**	**B**	**C**	**D**	**E**	**F**	**G**	**Standard Class Label**
$S_{11}A$								
$S_{11}B$								
$S_{11}C$								
$S_{22}A$								
$S_{22}B$								
$S_{22}C$								
Forward transmission								
Reverse transmission								
Forward match								
Reverse match								
Response								
Response & isolation								
TRL thru								
TRL reflect								
TRL line								
TRL Option								
Cal Z_0: _____ System Z_0 ____ Line Z_0								
Set ref: ____ Thru ____ Reflect								
Lowband frequency: _____								

ManualsPlus.com

Table A-6 Blank Form for the PNA Series Network Analyzer

Calibration Kit Label: _____	
Class	**A**
$S_{11}A$	
$S_{11}B$	
$S_{11}C$	
$S_{21}T$	
$S_{22}A$	
$S_{22}B$	
$S_{22}C$	
$S_{12}T$	
TRL 'T'	
TRL 'R'	
TRL 'L'	

Notes:

1. **If you are performing a TRL calibration:**
   - $S_{21}T$ and $S_{12}T$ must be defined as *thru* standards.
   - $S_{11}A$ and $S_{22}A$ must be defined as *reflection* standards.
   - $S_{11}B$, $S_{11}C$, $S_{22}B$, and $S_{22}C$ must be defined as *line* standards.
2. **If you are performing a TRM calibration:**
   - $S_{21}T$ and $S_{12}T$ must be defined as *thru* standards.
   - $S_{11}A$ and $S_{22}A$ must be defined as *reflection* standards.
   - $S_{11}B$, $S_{11}C$, $S_{22}B$, and $S_{22}C$ must be defined as *match* standards.
3. **If you are performing an LRM calibration:**
   - $S_{21}T$ and $S_{12}T$ must be defined as *line* standards.
   - $S_{11}A$ and $S_{22}A$ must be defined as *reflection* standards.
   - $S_{11}B$, $S_{11}C$, $S_{22}B$, and $S_{22}C$ must be defined as *match* standards.
4. **$S_{11}B$ and $S_{11}C$ must be defined as the same standard.**
5. **$S_{22}B$ and $S_{22}C$ must be defined as the same standard**.

For additional information on performing TRL, TRM, and LRM calibrations, refer to your PNA series network analyzer embedded help system.

ManualsPlus.com

Nominal Standard Definitions

Standard definitions provide the constants needed to mathematically model the electrical characteristics (delay, attenuation, and impedance) of each calibration standard. The nominal values of these constants are theoretically derived from the physical dimensions and material of each calibration standard, or from actual measured response. These values are used to determine the measurement uncertainties of the network analyzer. The standard definitions in Tables A-7 through A-9 list typical calibration kit parameters used to specify the mathematical model of each device. This information must be loaded into the network analyzer to perform valid calibrations. Refer to your network analyzer user's documentation for instructions on loading calibration definitions.

NOTE The values in the standard definitions table are valid *only* over the specified operating temperature range.

Setting the System Impedance

This kit contains only 50 ohm devices. Ensure the system impedance (Z_0) is set to 50 ohms. Refer to your network analyzer user's documentation for instructions on setting system impedance.

ManualsPlus.com

Table A-7 Standard Definitions for the 8510 Network Analyzer

System Z_0[a] = 50.0 Ω
Disk File Name: CK_24MMA4

Calibration Kit Label: 2.4 mm A.4
Tape File Number: * FILE 1

Standard[b]		C0 ×10^{-15} F	C1 ×10^{-27} F/Hz	C2 ×10^{-36} F/Hz^2	C3 ×10^{-45} F/Hz^3		Offset			Frequency in GHz			
Number	Type	L0 ×10^{-12} H	L1 ×10^{-24} H/Hz	L2 ×10^{-33} H/Hz^2	L3 ×10^{-42} H/Hz^3	Fixed or Sliding[c]	Delay in ps	Z_0 Ω	Loss in GΩ/s	Min	Max	Coax or Waveguide	Standard Label
1	Short[d]	2.1636	−146.35	4.0443	−0.0363		22.548	50	3.554	0	999	Coax	Short
2	Open[d]	29.722	165.78	−3.5385	0.0710		20.837	50	3.23	0	999	Coax	Open
3													
4													
5	Open[e]	6.9558	−1.0259	−0.01435	0.0028		0	50	0	0	999	Coax	3.5/2.92
6	Open[e]	5.9588	−11.195	0.5076	−0.00243		0	50	0	0	999	Coax	3.5/SMA
7	Open[e]	13.4203	−1.9452	0.5459	0.01594		0	50	0	0	999	Coax	2.92/SMA
8	Open[e]	8.9843	−13.9923	0.3242	−0.00112		0	50	0	0	999	Coax	2.4/1.85
9	Load					Fxd	0	50	0	0	999	Coax	Broadband
10	Load					Sliding	0	50	0	3.999	999	Coax	Sliding
11	Delay/ thru						0	50	0	0	999	Coax	Thru
12	Load					Fxd	0	50	0	0	4.001	Coax	Lowband
13	Delay/ thru						43.240	50	7.0	0	999	Coax	Adapter
14													
15													
16													
17													
18													
19													
20													
21													

a. Ensure system Z_0 of network analyzer is set to this value.
b. Open, short, load, delay/thru, or arbitrary impedance.
c. Load or arbitrary impedance only.
d. Typical values only. Disk values may be different.
e. This standard type (open) is used to accurately model the adapter listed in the Standard Label column.

ManualsPlus.com

Table A-8 Standard Definitions for the 872*x* Series Network Analyzer

System Z_0[a] = 50.0 Ω							Calibration Kit Label: 2.4 mm						
Standard[b]							Offset			Frequency in GHz			
Number	Type	C0 $\times 10^{-15}$ F	C1 $\times 10^{-27}$ F/Hz	C2 $\times 10^{-36}$ F/Hz^2	C3 $\times 10^{-45}$ F/Hz^3	Fixed or Sliding[c]	Delay in ps	Z_0 Ω	Loss in GΩ/s	Min	Max	Coax or Waveguide	Standard Label
1	Short	0	0	0	0		22.548	50	3.554	0	999	Coax	Short
2	Open	29.72	165.78	–3.54	0.07		20.837	50	3.23	0	999	Coax	Open
3	Load					Fxd	0	50	3.554	0	999	Coax	Broadband
4	Delay/ thru						0	50	3.554	0	999	Coax	Thru
5	Load					Sliding	0	50	3.554	3.999	999	Coax	Sliding
6	Load					Fxd	0	50	3.554	0	4.001	Coax	Lowband
7													
8													

a. Ensure system Z_0 of network analyzer is set to this value.
b. Open, short, load, delay/thru, or arbitrary impedance.
c. Load or arbitrary impedance only.

ManualsPlus.com

Table A-9 Standard Definitions for the PNA Series Network Analyzers

System Z_0[a] = 50.0 Ω — Calibration Kit Label: 2.4 mm Model 85056A

Standard[b]		C0 $\times 10^{-18}$ F	C1 $\times 10^{-30}$ F/Hz	C2 $\times 10^{-39}$ F/H^2	C3 $\times 10^{-48}$ F/Hz^3	Fixed or sliding	Offset			Frequency in GHz		Coax or Waveguide	Standard Label
Number	Type	L0 $\times 10^{-12}$ H	L1 $\times 10^{-24}$ H/Hz	L2 $\times 10^{-33}$ H/Hz^2	L3 $\times 10^{-45}$ H/Hz^3		Delay in ps	Z_0 Ω	Loss in GΩ/s	Min	Max		
1	Short[c]	2.1636	–146.35	4.0443	–0.0363		22.548	50	3.554	0	999	Coax	Short
2	Open[c]	29.722	165.78	–3.5385	0.0710		20.837	50	3.23	0	999	Coax	Open
3	Load					Fxd	0	50	3.554	0	999	Coax	Broadband
4	Delay/ thru						0	50	3.554	0	999	Coax	Thru
5	Load					Sliding	0	50	3.554	3.999	999	Coax	Sliding
6	Load					Fxd	0	50	3.554	0	4.001	Coax	Lowband
7													
8													

a. Ensure system Z_0 of network analyzer is set to this value.
b. Open, short, load, delay/thru, or arbitrary impedance.
c. Typical values only. Disk values may be different.

ManualsPlus.com

Blank Form

The standard definitions may be changed to meet your specific requirements. Tables A-10 and A-12 are provided to record the modified standard definitions.

Table A-10 Blank Form for the 8510 Network Analyzer

System Z_0[a] = _____ **Calibration Kit Label: _____**
Disk File Name: _____

Standard[b]		$C0 \times 10^{-15}$ F	$C1 \times 10^{-27}$ F/Hz	$C2 \times 10^{-36}$ F/Hz^2	$C3 \times 10^{-45}$ F/Hz^3	Fixed or sliding[c]	Offset			Frequency in GHz		Coax or Waveguide	Standard Label
Number	Type	$L0 \times 10^{-12}$ H	$L1 \times 10^{-24}$ H/Hz	$L2 \times 10^{-33}$ H/Hz^2	$L3 \times 10^{-42}$ H/Hz^3		Delay	Z_0 Ω	Loss in GΩ/s	Min	Max		
1													
2													
3													
4													
5													
6													
7													
8													
9													
10													
11													
12													
13													
14													
15													
16													
17													
18													
19													
20													
21													

a. Ensure system Z_0 of network analyzer is set to this value.
b. Open, short, load, delay/thru, or arbitrary impedance.
c. Load or arbitrary impedance only.

ManualsPlus.com

Table A-11 Blank Form for the 872*x* Series Network Analyzer

System Z_0[a] = _____ **Calibration Kit Label:_____**

Standard[b]		C0 $\times 10^{-15}$ F	C1 $\times 10^{-27}$ F/Hz	C2 $\times 10^{-36}$ F/Hz^2	C3 $\times 10^{-45}$ F/Hz^3	Fixed or Sliding[c]	Offset			Frequency in GHz		Coax or Waveguide	Standard Label
Number	Type						Delay in ps	Z_0 Ω	Loss in GΩ/s	Min	Max		
1													
2													
3													
4													
5													
6													
7													
8													

a. Ensure system Z_0 of network analyzer is set to this value.
b. Open, short, load, delay/thru, or arbitrary impedance.
c. Load or arbitrary impedance only.

ManualsPlus.com

Table A-12 Blank Form for the PNA Series of Network Analyzers

System Z_0[a] = **Calibration Kit Label: _____**

Standard[b]		C0 $\times 10^{-18}$ F	C1 $\times 10^{-30}$ F/Hz	C2 $\times 10^{-39}$ F/H^2	C3 $\times 10^{-48}$ F/Hz^3	Fixed or sliding	Offset			Frequency in GHz		Coax or Waveguide	Standard Label
Number	Type	L0 $\times 10^{-12}$ H	L1 $\times 10^{-24}$ H/Hz	L2 $\times 10^{-33}$ H/Hz^2	L3 $\times 10^{-45}$ H/Hz^3		Delay in ps	Z_0 Ω	Loss in GΩ/s	Min	Max		
1													
2													
3													
4													
5													
6													
7													
8													

a. Ensure system Z_0 of network analyzer is set to this value.
b. Open, short, load, delay/thru, or arbitrary impedance.

ManualsPlus.com

A

adapters, 1-2
  part numbers, 6-2
Agilent Technologies
  contacting, 5-3
  warranty, ii
alcohol
  isopropyl
    as cleaning solvent, 3-5
    part number, 6-3
    precautions for use of, 3-5
altitude
  specifications, 2-2
antistatic mat, 3-2
  part number, 6-3
assistance
  who to contact, ii

B

blank form
  standard class assignments, A-5
  standard definitions, A-12
box
  pads
    part numbers, 6-2
  part number, 6-2
broadband loads, 1-2
  part numbers, 6-2
  specifications, 2-5

C

cal kit
  performance
    verifying, 4-2
  warranty, ii
calibration
  bad, 5-2
  certificate of, 4-3
  MIL-STD 45662, 4-3
  report, 4-3
  temperature, 2-2
calibration definitions
  disk
    part number, 6-3
calibration kit
  contents, 1-2, 6-4, 6-5
    drawing of, 6-4, 6-5
  overview, 1-2
  performance
    how Agilent verifies, 4-2
    verifying, 4-2
  warranty, ii
case
  part number, 6-2
certificate of calibration, 4-3
certification
  of device specifications, 2-6
characteristics
  mechanical, 2-3
class assignments
  blank form, A-5
  standard, A-2
cleaning connectors, 3-4
cleaning supplies, 1-3
  part numbers, 6-3
cleaning swabs, 3-5
  part number, 6-3
compressed air
  for cleaning, 3-4
connections, 3-14
  ESD protection, 3-14
  final, 3-14
  preliminary, 3-14
  separating, 3-17
    sliding load, 3-17
  sliding load, 3-16
  using torque wrench, 3-14
connector
  cleaning, 3-4
  damage, 3-3
  defects, 3-3
  female, 3-4
  gage
    accuracy, 3-6
    handling, 3-6, 3-8, 3-10
    part numbers, 6-2
    use of, 3-6
    zeroing, 3-6, 3-8, 3-10
  gaging, 3-6, 3-8
    to determine pin depth, 3-6
    when to do, 3-7
  mating plane surfaces, 3-5
    cleaning, 3-5
  sex, 1-6
    clarifying, 1-6
  slotless, 3-4
  threads
    cleaning, 3-5
    inspecting, 3-3
  visual inspection, 3-3
  wear, 3-3
    affect on electrical performance, 3-3
contacting Agilent Technologies, 5-3
contents
  calibration kit, 6-4, 6-5
  drawing of, 6-4, 6-5
  incomplete
    what to do, 1-3
cord
  grounding
    part number, 6-3

D

damage
  caused by electrostatic discharge, 3-2
  device, 3-3
  inspecting for, 3-3
  to connectors, 3-3
  what to do, 1-4
damaged connectors, 3-3
data
  recertification, 4-3
defective connectors, 3-3
defects
  connector, 3-3
definitions
  standard, A-8
deviation from nominal phase, 2-5
device
  connecting, 3-14
  damage, 3-3
  disconnecting, 3-17
  handling, 3-18
  maintenance, 1-6
  performance
    verifying, 4-2
  specifications, 2-5
    certification of, 2-6
    traceability, 4-2, 4-3
  storage, 3-18
  temperature, 2-2
  visual inspection, 3-3
disconnections, 3-17
disk
  calibration definitions
    part number, 6-3
  specifications and performance verification
    part number, 6-3

E

electrical specifications, 2-5
electrostatic discharge, *See* ESD
environmental
  regulations, 3-5
  requirements, 2-2
  specifications, 2-2
equipment required, 1-3
ESD, 3-2
  antistatic mat, 3-2
    part number, 6-3
  heel strap, 3-2
    part number, 6-3
  precautions, 3-4
  protection, 3-2
    setup, 3-2
  supplies, 3-2
    part numbers, 6-3

ManualsPlus.com

wrist strap, 3-2
part number, 6-3
exclusive remedies, ii

F

female connectors, 3-4
inspection of, 3-4
frequency
specifications, 2-5

G

gage
connector, 1-3
handling, 3-8, 3-10
part numbers, 6-2
zeroing, 3-8, 3-10
gaging
connectors, 3-6, 3-8
when to do, 3-7
sliding loads, 3-10
to determine pin depth, 3-6
grounding cord
part number, 6-3

H

handling, 3-18
heel strap, 3-2
part number, 6-3
humidity
specifications, 2-2

I

impedance
system, A-8
setting, A-8
incoming inspection, 1-3
inspection
damage, 3-3
defects, 3-3
female connectors, 3-4
incoming, 1-3
mating plane surfaces, 3-3
visual, 3-3
isopropyl alcohol
as cleaning solvent, 3-5
part number, 6-3
precautions for use of, 3-5

K

kit
contents, 1-2, 6-4, 6-5
drawing of, 6-4, 6-5
misuse of, ii
overview, 1-2
warranty, ii

L

liability, ii
limits
pin depth, 2-4
loads
broadband, 1-2
part numbers, 6-2
sliding, 1-3
part numbers, 6-2

M

maintenance, 3-2
agreements, ii
improper or inadequate, ii
of devices, 1-6
preventive, 1-6
making connections, 3-14
ESD protection, 3-14
precautions, 3-14
manual
copyright dates, i
part number, i
print date, i
title, i
mat
antistatic, 3-2
part number, 6-3
conductive table
part number, 6-3
mating plane surfaces
cleaning, 3-5
connector, 3-5
inspection of, 3-3
mechanical characteristics, 2-3
affect on electrical performance, 2-3
verifying, 3-6
MIL-STD 45662
calibration, 4-3
misuse
of product, ii
modification
unauthorized, ii

N

National Institute of Standards and Technology (NIST), 2-6, 4-2
nitrogen
for cleaning, 3-4
nominal standard definitions, A-8
numbers
replaceable parts, 6-2
serial, 1-5
recording, 1-5

O

observed limits
pin depth, 2-4
offset opens
part numbers, 6-2
offset shorts
part numbers, 6-2
offsets, 1-2
open-end wrench, 1-3, 3-17
5/16 in
part number, 6-3
7-mm
part number, 6-3
opens, 1-2
part numbers, 6-2
specifications, 2-5
options, 1-3
ordering
parts, 6-2

P

pads
box
part numbers, 6-2
part numbers, 6-2
of items in kit, 6-2
of items not in kit, 6-3
parts
included in kit, 6-2
not included in kit, 6-2, 6-3
ordering, 6-2
replaceable, 6-2
performance verification
fail, 5-2
pin depth, 2-3
adjusting sliding load, 3-12
affect on electrical performance, 2-4
gaging to determine, 3-6
observed limits, 2-4, 3-6
protrusion, 2-3
recession, 2-3
typical values, 2-4
precision adapters
part numbers, 6-2
preventive maintenance, 1-6
protrusion
pin depth, 2-3

R

recertification
how to order, 4-3
interval, 4-3
what's included, 4-3
where it's done, 4-3
recession

ManualsPlus.com

pin depth, 2-3
regulations
environmental, 3-5
remedies
exclusive, ii
replaceable parts, 6-2, 6-4, 6-5
drawing of, 6-4, 6-5
report, calibration, 4-3
requirements
environmental, 2-2
return
kit or device to Agilent, 5-3
return loss
specifications, 2-5

S

separating connections, 3-17
serial numbers, 1-5
devices, 1-5
recording, 1-5
service, 5-3
service tag, 1-4, 4-3, 5-3
set marks
sliding load, 3-18
setup
ESD protection, 3-2
shorts, 1-2
part numbers, 6-2
specifications, 2-5
sliding load
calibration, 3-18
connecting, 3-16
pin depth
adjusting, 3-12
separating connection, 3-17
set marks, 3-18
sliding ring, 3-18
using, 3-18
sliding loads, 1-3
gaging, 3-10
part numbers, 6-2
specifications, 2-5
sliding ring
sliding load, 3-18
specifications, 2-2
altitude
operating, 2-2
storage, 2-2
certification of, 2-6
deviation from nominal phase, 2-5
device, 2-5
electrical, 2-5
environmental, 2-2
frequency, 2-5
humidity
operating, 2-2
storage, 2-2
return loss, 2-5
temperature, 2-2
torque wrench, 3-14
traceability, 4-2, 4-3
specifications and performance verification disk
part number, 6-3
standard class assignments, A-2
blank form, A-5
standard definitions, A-8, A-12
blank form, A-12
nominal, A-8
standards
international, 2-6
National Institute of Standards and Technology (NIST), 2-6, 4-2
static
discharge, 3-2
electricity, 3-2
storage, 3-18
storage case
part number, 6-2
strap
heel and wrist
part number, 6-3
supplies, cleaning, 1-3
part number, 6-3
swabs, cleaning, 3-5
part number, 6-3
system impedance, A-8

T

tag
service, 1-4, 4-3, 5-3
temperature
affect on electrical performance, 2-2
calibration, 2-2
cautions about, 2-2
changes in, 2-2
device, 2-2
error-corrected, 2-2
measurement, 2-2
specifications, 2-2
operating, 2-2
storage, 2-2
verification and measurement, 2-2
test data, 4-3
threads
connector
cleaning, 3-5
inspecting, 3-3
tools
part numbers, 6-3
torque wrench, 1-3
part number, 6-3
specifications, 3-14
traceability
of device specifications, 4-2, 4-3
troubleshooting, 5-2

U

user's and service guide
part number, 6-3

V

verification
temperature, 2-2
visual inspection, 3-3

W

warranty, ii
limitation of, ii
service or repair, ii
wear
connector, 3-3
affect on electrical performance, 3-3
wrench
7 mm open-end
part number, 6-3
open-end, 1-3, 3-15, 3-17
part number, 6-3
proper positioning of, 3-15
torque, 1-3, 3-14, 3-15
part number, 6-3
precautions for use of, 3-15
proper use of, 3-15
wrist strap, 3-2
part number, 6-3

Z

zeroing
connector gage, 3-8, 3-10