ManualsPlus.com

About this Manual

We've added this manual to the Agilent website in an effort to help you support your product. This manual is the best copy we could find; it may be incomplete or contain dated information. If we find a more recent copy in the future, we will add it to the Agilent website.

Support for Your Product

Agilent no longer sells or supports this product. Our service centers may be able to perform calibration if no repair parts are needed, but no other support from Agilent is available. You will find any other available product information on the Agilent Test & Measurement website, www.tm.agilent.com.

HP References in this Manual

This manual may contain references to HP or Hewlett-Packard. Please note that Hewlett-Packard's former test and measurement, semiconductor products and chemical analysis businesses are now part of Agilent Technologies. We have made no changes to this manual copy. In other documentation, to reduce potential confusion, the only change to product numbers and names has been in the company name prefix: where a product number/name was HP XXXX the current name/number is now Agilent XXXX. For example, model number HP8648A is now model number Agilent 8648A.

ManualsPlus.com

Operating and Service Manual

HP 85370A
Antenna Position Encoder

HEWLETT PACKARD

HP Part No. 85370-90001
Printed in USA 1993

Edition 1

ManualsPlus.com

© Copyright 1993 Hewlett-Packard Company. All rights reserved.

ManualsPlus.com

Printing History

New editions of this manual will incorporate all material updated since the previous editions. The manual printing date and part number indicate its current edition. The printing date changes when a new edition is printed. (Minor corrections and updates which are incorporated at reprint do not cause the date to change.) The manual part number changes when extensive technical changes are incorporated.

Each HP 85370A has an individual serial number. This number is composed of a five-character prefix and a five-digit suffix. The prefix always stays the same unless there is significant change to the product. Because of this, the prefix can be used to keep track of major revisions to the instrument.

The following versions of this manual have been produced:

Edition	Date	Serial Prefix
Edition 1	May 1993	3122A

Safety Considerations

This product and related documentation must be reviewed for familiarization with safety markings and instructions before operation.

This product is a Safety Class I instrument (provided with a protective earth terminal).

Before Applying Power

Verify that the product is set to match the available line voltage and the correct fuse is installed.

Safety Earth Ground

An uninterruptible safety earth ground must be provided from the main power source to the product input wiring terminals, power cord, or supplied power cord set.

ManualsPlus.com

Warning

Any interruption of the protective (grounding) conductor (inside or outside the instrument) or disconnecting the protective earth terminal will cause a potential shock hazard that could result in personal injury. (Grounding one conductor of a two conductor outlet is not sufficient protection.) In addition, verify a common ground exists between the unit under test and this instrument prior to energizing either unit.

Whenever it is likely that the protection has been impaired, the instrument must be made inoperative and be secured against any unintended operation.

If this instrument is to be energized via an autotransformer (for voltage reduction) make sure the common terminal is connected to neutral (that is, the grounded side of the mains supply).

Servicing instructions are for use by service-trained personnel only. To avoid dangerous electric shock, do not perform any servicing unless qualified to do so.

Adjustments described in the manual are performed with power supplied to the instrument while protective covers are removed. Energy available at many points may, if contacted, result in personal injury.

Capacitors inside the instrument may still be charged even if the instrument has been disconnected from its source of supply.

For continued protection against fire hazard, replace the line fuse(s) only with 250V fuse(s) of the same current rating and type (for example, normal blow, time delay, etc.). Do not use repaired fuses or short circuited fuseholders.

Safety Symbols

Instruction manual symbol: The product will be marked with this symbol when it is necessary for the user to refer to the instruction manual (see Table of Contents for page references).

Indicates hazardous voltages.

Indicates earth (ground) terminal.

Warning

The WARNING sign denotes a hazard. It calls attention to a procedure, practice, or the like, which, if not correctly performed or adhered to, could result in personal injury. Do not proceed beyond a WARNING sign until the indicated conditions are fully understood and met.

ManualsPlus.com

Caution

The CAUTION sign denotes a hazard. It calls attention to an operating procedure, practice, or the like, which, if not correctly performed or adhered to, could result in damage to or destruction of part or all of the product. Do not proceed beyond a CAUTION sign until the indicated conditions are fully understood and met.

Manual Organization

- Chapter 1, "Getting Acquainted," describes the HP 85370A Position Encoder, its capabilities, key features and hardware requirements.
- Chapter 2, "Installation," provides steps for installing and cofiguring the encoder.
- Chapter 3, "Operation," describes the softkeys, configuration, and operational functions.
- Chapter 4, "HP-IB Programming Codes," lists the programming codes available and provides in-depth descriptions.
- Chapter 5, "In Case of Difficulty," includes a list of error messages and their possible causes.
- Chapter 6, "Service," descibes the system theory of operation, recommended test equipment and troubleshooting procedures.

Conventions

This manual uses the following conventions:

(KEY)	A key-name that looks like this represents a key physically located on the instrument. These are commonly referred to as hardkeys.
`Softkey`	Text that looks like this represents a softkey.
`CRT Text`	Text that looks like this represents messages that appear on a CRT.

ManualsPlus.com

HP 85370A Position Encoder Overview

1. The HP 8530A Option 005

The HP 85370A Position Encoder operates together with the HP 8530A option 005. The HP 8530 receiver must have firmware revision A.01.60, or higher. When using the encoder, positioner trigger pulses are not needed to trigger measurements.

2. Controlling the Encoder

Controlling the Position Encoder is easy, simply use the HP 8530A front panel softkeys to control all functions. When in Angle Domain, just press: STIMULUS (MENU) ENCODER FUNCTIONS

3. Easy Connections

A single connection links the HP 8530A option 005 and the encoder. This connection provides DC power to the encoder, and allows digital communications and control signals to pass between the encoder and receiver.

HP 85370A Position Encoder synchro connectors are completely compatible with almost every synchro-based positioner system that exists. A special design makes the encoder very tolerant of sychro misalignment.

4. The HP 85370A Position Encoder

The HP 85370A Position Encoder allows manual antenna measurements to be made using the HP 8530A Option 005 receiver and most antenna positioner systems. The position encoder monitors the synchro lines from the antenna positioner, decodes the synchro signals, and sends the angle information to the receiver.

When the positioner moves through the desired angles, the receiver measures and displays the antenna pattern. The user can select antenna pattern parameters (such a start and stop angles, or angular sampling increment) from the front panel of the receiver.

The antenna position encoder allows existing manual antenna ranges to be upgraded to use the HP 8530A receiver—without changing positioning systems.

The antenna position encoder has these additional features:

Speed, Accuracy, Resolution
The position encoder can operate at high speed, with great accuracy and high resolution. Refer to "Specifications" in Chapter 1.

ManualsPlus.com

Angle Offset

Once you find antenna boresight, you can "zero" the angular reading using the offset feature. Later measurements will be offset by that amount. Offset only affects the active (currently selected) axis.

Choice of Coordinate Systems

You can now make measurements using **Positioner Coordinate system** or the **Antenna Coordinate system**. In the Positioner Coordinate system, angle *increases* as the positioner rotates in a clockwise direction. In the Antenna Coordinate system, angle *decreases* as the positioner rotates in a clockwise direction. Refer to "Coordinate Systems" in Chapter 2 for more information.

Trigger Generation

The position encoder supplies measurement triggers in positioner systems that do not genearte triggers. For example, the Scientific Atlanta 4100 does not supply TTL triggers. Normally, this would make it incompatible with the HP 8530A, however, the position encoder can produce the triggers for the SA 4100, allowing it to be used in HP 8530A measurements.

Single or Dual Synchro

The position encoder can work with single (1:1) or dual synchro (1:1 and 36:1) positioner systems.

Synchro Misalignment

The HP 85370A Position Encoder tolerates moderate synchro misalignment (between 1:1 and 36:1 synchros) without any affect on measurement accuracy.

Adapts to Existing Wiring

Configuration switches inside the position encoder allows it to adapt to virtually all wiring schemes. No rewiring is necessary.

5. Axis Indicators

LEDs on the front panel always show which axis has been selected. (Axis is selected through HP 8530A front panel softkeys.)

6. Current Angle

A display on the encoder front panel always displays the current angle.

7. ON indicator

Shows power is being supplied by the HP 8530A.

8. I/O Indicator

This LED flashes when data and control instructions pass between the positioner encoder and the receiver.

ManualsPlus.com

ManualsPlus.com

Contents

1. Getting Acquainted

Chapter Contents 1-1
Supplied Parts 1-1
Options 1-1
Equipment Required but Not Supplied 1-2
Specifications 1-2
Supplemental Characteristics 1-3
Rear Panel Features 1-3

2. Installation

HP 8530A Operating System 2-1
Installing the Encoder 2-1
To Configure the Position Encoder 2-4
Set the Reference Polarity Switch 2-5
Check Internal Configuration Switch Settings . . 2-6
Configure the Receiver for Proper Encoder Operation 2-8
Coordinate Systems 2-9
The Positioner Coordinate System 2-10
The Antenna Coordinate System 2-12

3. Operation

HP 85370A Position Encoder Operation 3-1
Introduction 3-1
Position Encoder Softkeys 3-1
Configuration Functions 3-2
Operational Functions 3-3

4. HP-IB Programming Codes and In-Depth Descriptions

60 dBPATTERN 4-2
ANG DISPLY OFF 4-3
ANG DISPLY ON/MOVE 4-4
ANG POL 0 to 360 4-5
ANG POL +/-180 4-6
AXIS A 4-7
AXIS B 4-8
AXIS C 4-9
BEAM/BAND WIDTH 4-10
BORESIGHT ANGLE 4-11
CLEAR OFFSET 4-12

ManualsPlus.com

ENCODER ANGLE 4-13
ENCODER FUNCTIONS 4-14
OUTPENCAR 4-15
OUTPENCAO 4-16
SAVE OFFSET 4-17
SYNCHRO DUAL 4-18
SYNCHRO SINGLE 4-19
New Query Commands 4-20
Caution/Tell Messages 4-21

5. In Case of Difficulty
Before Doing Anything Else 5-1
Error Messages 5-2

6. Service
System Theory of Operation 6-2
Recommended Test Equipment 6-6
Troubleshooting Instrument Failures 6-7
Testing an Assembly 6-9
HP 85370A A1 Motherboard 6-9
Power Supply 6-9
LED Displays 6-11
Configuration Switches 6-11
Axis Select and Direction Switch Relays . . . 6-12
Synchro to Digital Converters 6-14
Data Bus 6-14
HP 85370A A2 Display board 6-15
HP 8530A option 005 Interface board, HP 85102R A27 6-17
Replaceable Parts 6-19
SYNCHRO Connector Pins 6-25
Assembly Replacement Procedures and Adjustments 6-28
Introduction 6-28
A1 Motherboard Assembly 6-29
Relays (K1 through K5) 6-30
A2 Display Board Assembly 6-31
W8 Display Ribbon Cable Assembly 6-32
Front Panel 6-33
W7 Front Panel LED Cable Assembly 6-35
Rear Panel Cable Assemblies 6-36
Adjustments 6-37
Performance Verification 6-38

ManualsPlus.com

A. Legal Notices
Certification A-1
Warranty A-1
Limitation of Warranty A-2
Manufacturer's Declaration A-3
Sound Emissions A-3

Index

ManualsPlus.com

Figures

1-1. HP 85370A Rear Panel Features 1-3
1-2. SYNCHRO IN Chassis Connector Pin-Out . . . 1-4
1-3. SYNCHRO OUT Chassis Connector Pin-Out . . 1-5
2-1. HP 85370A Position Encoder Installation, Option 1, Configuration 1 2-2
2-2. HP 85370A Position Encoder Installation, Option 1, Configuration 2 2-3
2-3. HP 85370A Position Encoder Installation, Option 2 2-3
2-4. Configuration Switch Locations 2-4
2-5. Positioner Coordinate System 2-11
2-6. Antenna Coordinate System 2-13
3-1. Position Encoder (option 005) Softkeys 3-1
6-1. Single Speed Synchro Diagram 6-2
6-2. Dual Speed Synchro Diagram 6-3
6-3. Antenna Position Encoder Block Diagram 6-5
6-4. Power Supply Test Points 6-10
6-5. Axis Select and Direction Switch Relays 6-13
6-6. A27 Decoupling 6-17
6-7. HP 85370A Chassis Diagram 6-20
6-8. HP 85370A Internal Parts Diagram 6-21
6-9. Standard SYNCHRO connector pinout 6-25
6-10. Axis A/B/C SYNCHRO Cable Connector Pinout for Option 001 6-26
6-11. SYNCHRO Connector Cable Pinout for Option 002 6-27
6-12. Front Dress Panel Replacement 6-34
6-13. Rear Cable Assemblies 6-37

ManualsPlus.com

Tables

1-1. Supplied Parts 1-1
6-1. Recommended Test Equipment 6-6
6-2. Disassembly Tools Needed 6-6
6-3. A1 Power Supply Voltages 6-10
6-4. Axis Select Control Lines 6-12
6-5. A2 Power Supply Voltages 6-15
6-6. HP 85370A Replacement Parts 6-23
6-7. Connector Pins for Rear Panel SYNCHRO Connectors 6-25
6-8. Connector Pins for Option 001 Cable Connectors . 6-26
6-9. Connector Pins for Option 002 Cable Connectors . 6-27
6-10. Disassembly Tools Needed 6-28

ManualsPlus.com

ManualsPlus.com

1

Getting Acquainted

Chapter Contents

- Supplied parts
- Equipment required but not supplied
- Options
- Specifications
- Supplemental characteristics
- Rear panel features

Supplied Parts

The following items are supplied with the HP 85370A Position Encoder:

Table 1-1. Supplied Parts

Description	HP Model or Part Number
HP 85370A Position Encoder	HP 85370A
Encoder Interface Cable (0.9m)	85370-60006
HP 85370A Operation Manual	85370-90001
HP 8530A Operating System, Rev. A.01.60	08530-80010
#15 TORX Driver	8710-1622
Option 001	
22 pin (f) to three-head 8 pin (m) Adapter Cable (3m)	85370-60015
22 pin (m) to three-head 8 pin (f) Adapter Cable (1m)	85370-60016
Option 002	
Position Control Unit to SYNCHRO OUT Cable (1.8m)	85370-60008

Options

The information on option 001 and 002 is supplied for reference purposes only. One of these options was already ordered with your unit. (The HP 85370A Position Encoder must be ordered as option 001 or option 002.)

ManualsPlus.com

Option 001 (for Scientific Atlanta positioner systems)

This option is intended for use with virtually any Scientific Atlanta positioner system.

Note

If the S.A. synchro display unit is *not* used a reference adapter cable, HP part number 85370-60017 must be ordered. This cable supplies the synchro reference voltage to the position encoder when the synchro display unit is not used. Contact your local Hewlett-Packard sales representative.

Option 002 (for Flam & Russell or Orbit positioner systems)

This option is intended for use with the Flam & Russell 8502 or Orbit AL-4706-3A, AL-4806-3A, or AL-4906-3A positioner system.

Option 908 Rack Mounting Kit

This option provides the rack mounting adapter kit. To obtain this item after receiving the HP 85370A, order part number 5062-3972.

Equipment Required but Not Supplied

Reference Cable

If you have Option 001, and you do *not* use the S.A. synchro display unit, order the reference adapter cable, HP part number 85370-60017.

Specifications

Electrical

Operates on any one of three axes, single or dual synchros.

Rear Panel Connection Voltage Ratings

The rear panel synchro connections (SYNCHRO IN and SYNCHRO OUT) are rated for 120 V rms and 0.5 ampere maximum.

Resolution

Single synchro: 0.1 degree

Dual synchro: 0.01 degree

ManualsPlus.com

Accuracy

Single synchro: 0.4 degree

Dual synchro: 0.04 degree

Data Acquisition Speed

10 readings per degree at a maximum positioner velocity of three revolutions per minute.

30 readings per degree at a positioner velocity of one revolution per minute.

Supplemental Characteristics

- Active Axis Angle Indicator: five digits, selectable ±180°, or 0 to 360° display.
- Selectable sense of rotation (clockwise or counter-clockwise).
- Industry Standard Connectors.
- Operates with HP 8530A receivers equipped with option 005 digital interface, and with firmware revision A.01.60, or greater.

Rear Panel Features

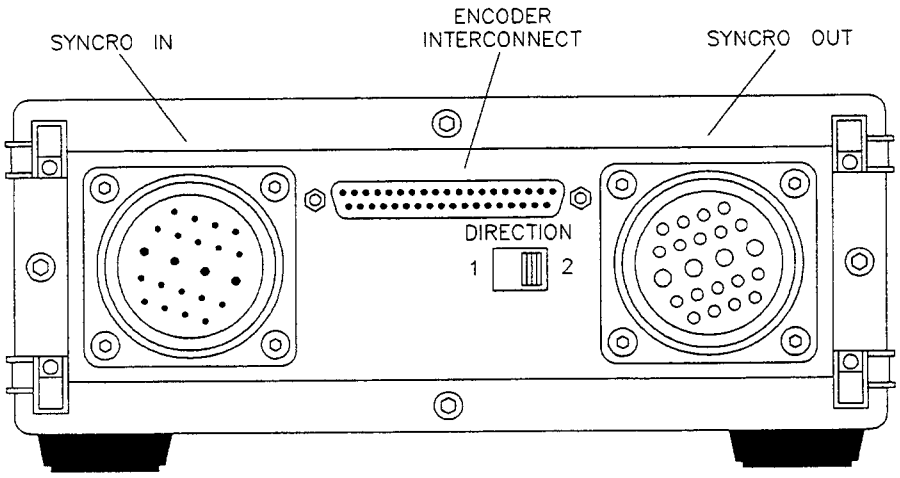

Figure 1-1. HP 85370A Rear Panel Features

Note

The SYNCHRO IN and SYNCHRO OUT connectors are interchangeable. Connect the synchro cables from the positioner and positioner control unit to either synchro connector on the HP 85370A Use the connector that will mate with your cable.

ManualsPlus.com

ENCODER INTERCONNECT

This is a private communications bus that links the HP 8530A to the position encoder.

SYNCHRO IN

Receives the synchro signals from the antenna positioner.

Connector Type:	MS3102E28-11PX (male)
Mating Connector (cable):	MS3106E28-11SX (female)
Voltage/Amp Rating:	120Vac at 0.5 ampere maximum

SYNCHRO IN and synchro connector pin information is shown in "SYNCHRO Connector Pins" in Chapter 6 later in this manual.

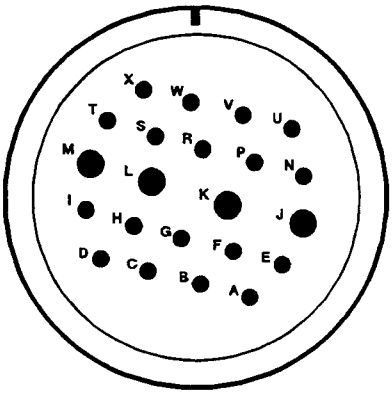

Figure 1-2. SYNCHRO IN Chassis Connector Pin-Out

ManualsPlus.com

SYNCHRO OUT

Passes the synchro signals to the synchro display of your antenna positioner system.

Connector Type:	MS3102E28-11SX (female)
Mating Connector (cable):	MS3106E28-11PX (male)
Voltage/Amp Rating:	120Vac at 0.5 ampere maximum

Warning

Never touch the pins of the SYNCHRO connector when the antenna positioner is connected. Sychro lines contain 120 Vac voltages which can cause injury or even death.

SYNCHRO and synchro connector pin information is shown in "SYNCHRO Connector Pins" in Chapter 6 later in this manual.

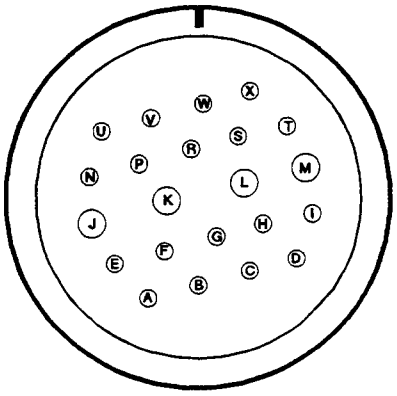

Figure 1-3. SYNCHRO OUT Chassis Connector Pin-Out

DIRECTION Switch

Allows selection of the **Positioner** or **Antenna** measurement coordinate systems. In the positioner coordinate system, angle *increases* as the positioner rotates in a clockwise direction. In the antenna coordinate system, angle *decreases* as the positioner rotates in a clockwise direction. Refer to "Coordinate Systems" in Chapter 2 for more information. The procedure for setting the DIRECTION switch is provided in "Installing the Encoder" in Chapter 2. All other configuration switches should be set *before* setting the DIRECTION switch. (Some internal configuration switches *reverse* the effects of the DIRECTION switch.)

ManualsPlus.com

ManualsPlus.com

2

Installation

HP 8530A Operating System

The HP 8530A should have an operating system with revision A.01.60 or higher in order to work with the HP 85370A. To check the operating system revision press:

(SYSTEM) MORE SERVICE FUNCTIONS SOFTWARE REVISION.

If your operating system is less than A.01.60, then update the HP 8530A by installing the new operating system included with the HP 85370A.

1. Press (SYSTEM) MORE SERVICE FUNCTIONS TEST MENU.
2. Insert the operating system disk, press (1) (9) (=MARKER).
3. Select PG_8530A file with the front panel knob.
4. Press LOAD FILE.

Once the operating system loads the instrument will preset. Store the new operating system disk with the old operating system disk.

Installing the Encoder

Turn the HP 8530A Receiver OFF. Connect the position encoder on the HP 85370A rear panel as shown in Figure 2-1, Figure 2-2, or Figure 2-3, depending on which option and configuration you have.

Note

The SYNCHRO IN and SYNCHRO OUT connectors are interchangeable. Connect the synchro cables from the positioner and positioner control unit to either synchro connectors on the HP 85370A. Use the connector that will mate with your cable.

Warning

Never touch the pins of the SYNCHRO connector when the antenna positioner is connected. Synchro lines contain 120 Vac voltages which can cause injury or even death.

ManualsPlus.com

Note

Do not apply a trigger signal to the HP 8530A EXTERNAL TRIGGER or EVENT TRIGGER BNC connector. If there is a BNC cable connecting the antenna positioner controller's INCREMENT TRIGGER OUTPUT to the HP 8530As EVENT TRIGGER IN, remove this cable. A trigger signal applied to this trigger when using the HP 85370A will cause a `TRIGGERING TOO FAST` message.

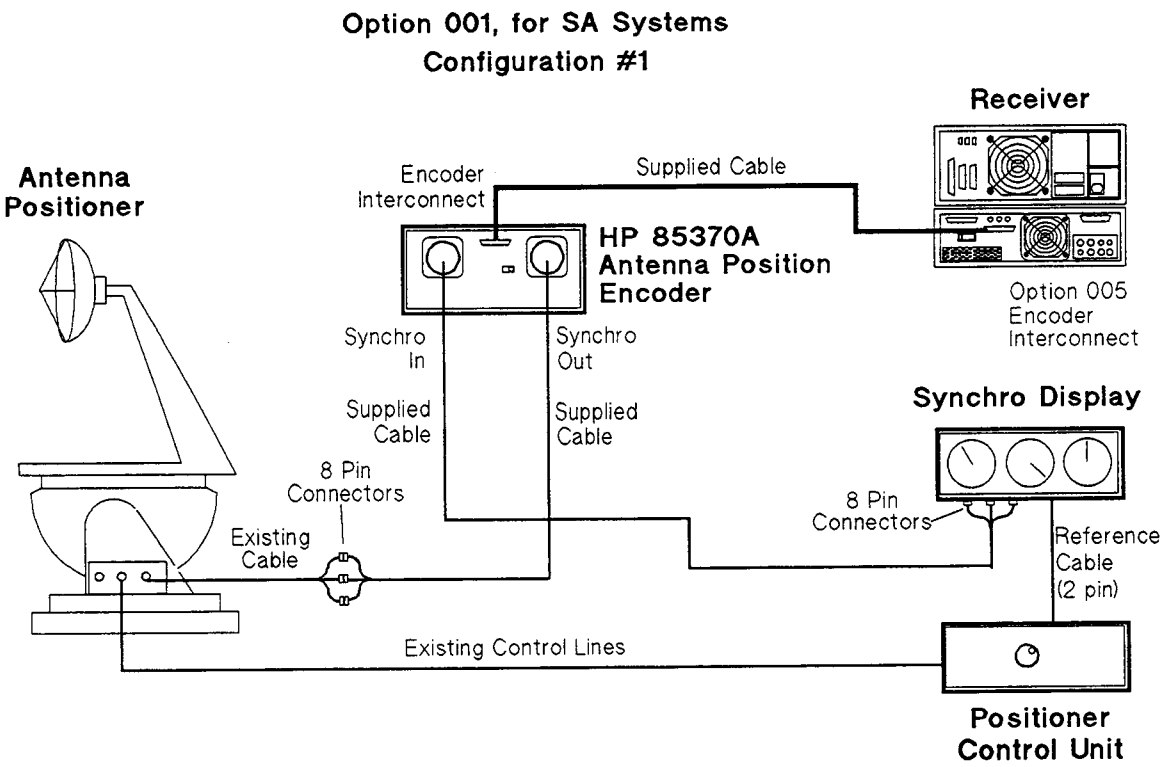

Figure 2-1. HP 85370A Position Encoder Installation, Option 1, Configuration 1

ManualsPlus.com

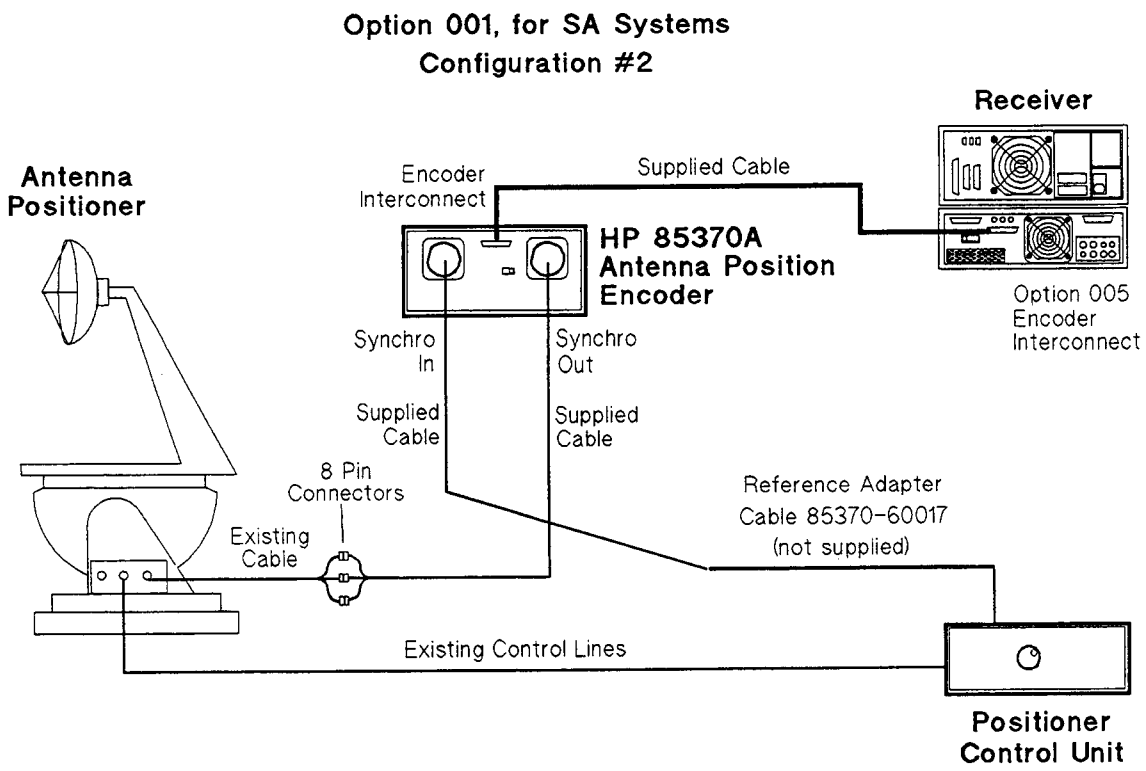

Figure 2-2. HP 85370A Position Encoder Installation, Option 1, Configuration 2

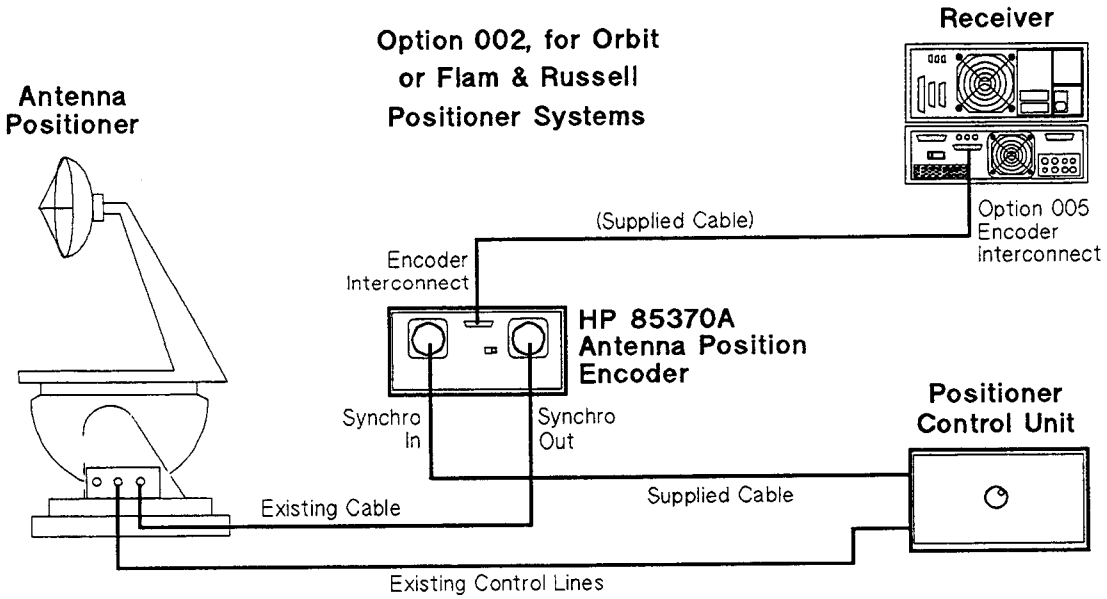

Figure 2-3. HP 85370A Position Encoder Installation, Option 2

ManualsPlus.com

To Configure the Position Encoder

The next step is to configure the position encoder switches for your system. Positioner systems have many different wiring schemes. The position encoder uses a series of internal switches to adapt to any existing wiring scheme, so rewiring is never required.

Tools Required: #15 TORX Driver

Many installations will not require any of the internal switches to be changed. If, when following these procedures, one the switches must be changed, first remove the HP 85370A top cover with a #15 TORX driver. The inside of the unit appears as shown in Figure 2-4. Do not remove the top cover unless required.

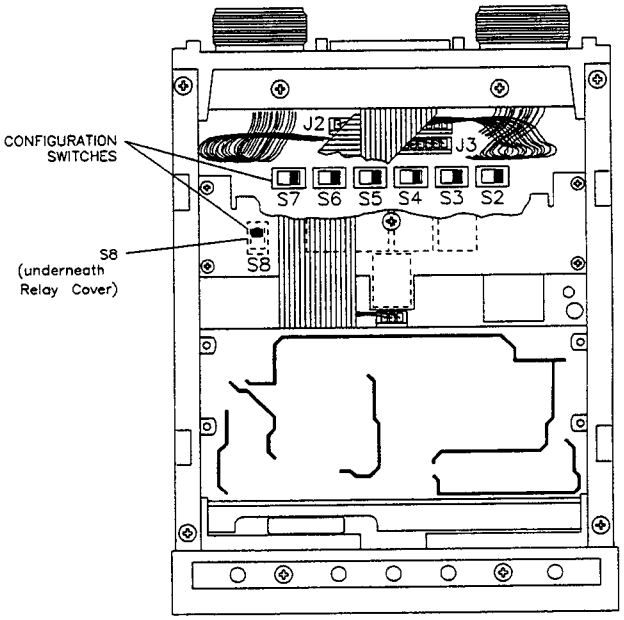

Figure 2-4. Configuration Switch Locations

Warning

Synchro signals of 90 to 120 V rms are present on some points inside the HP 85370A. These voltages can cause injury or even death. Make sure the connectors at J2 and J3 are connected when changing internal switches (refer to Figure 2-4). These connectors carry synchro signals, and represent a hazard if one of the connectors is removed.

ManualsPlus.com

Set the Reference Polarity Switch

1. Turn the system ON. Remember to turn the receiver ON last.
2. If possible, set the position controller to SLOW mode.
3. If the positioner controller has automatic features, make sure it is set to MANUAL or LOCAL mode.
4. Move the HP 85370A rear panel DIRECTION switch to the position indicated below:
   a. If using a Scientific Atlanta positioner, move the DIRECTION switch to the left "1" position (as viewed from the back of the unit).
   b. If using an Orbit or *any other brand* positioner, move the DIRECTION switch to the right "2" position (as viewed from the back of the unit).
5. On the receiver, press:

   (DOMAIN) ANGLE

   STIMULUS (MENU) ENCODER FUNCTIONS AXIS A MORE SYNCHRO SINGLE ANG POL 0 to 360

   If the receiver does not have the ENCODER FUNCTIONS softkey, it does not have the correct firmware revision. An update to a new firmware revision is required.
6. Move the positioner to ≈0° using the reference marks on the positioner body and turntable, or turn the positioner to a mechanical ≈0°.
7. If the HP 85370A display shows ≈180°, then flip switch S8. No action is necessary if the display shows ≈0°. Proceed to "Check Internal Configuration Switch Settings".

ManualsPlus.com

Check Internal Configuration Switch Settings

Check Coarse (Single, or 1:1) Synchro Configuration Switches

8. Move the antenna positioner clockwise (or in the positive direction) with its manual controls and watch the position encoder angle display.

   If the HP 85370A display increments, continue to the next step. If the HP 85370A display counts backward, change the position of internal switch S2. It is best to use a non-conductive tool. The display should now increment properly.

9. If the positioner has only one axis go to "Check Dual Synchro Configuration Switches".

   If your positioner has a second axis (Axis B), press PRIOR MENU AXIS B (on the receiver). Select Axis B on the positioner controller.

10. Move the antenna positioner clockwise (or in the positive direction) with its manual controls and watch the position encoder angle display.

    If the HP 85370A display increments, continue to the next step. If the HP 85370A display counts backwards, change the position of internal switch S3. The display should now increment properly.

11. If the positioner does not have Axis C go to "Check Dual Synchro Configuration Switches".

    If the positioner has a third axis (Axis C), press AXIS C (on the receiver). Select Axis C on the positioner controller.

12. Move the antenna positioner clockwise (or in the positive direction) with its manual controls and watch the position encoder angle display.

    If the HP 85370A display increments, continue to the next step. If the HP 85370A display counts backwards, change the position of internal switch S4. The display should now increment properly.

ManualsPlus.com

Check Dual Synchro Configuration Switches

If the positioner system only has a single synchro (coarse resolution), replace the top cover of the HP 85370A (if necessary). This part of the procedure is complete. Now go to the "Select ±180° or 0 to 360° Mode" procedure.

If your positioner system has fine (dual) synchro operation, continue with this procedure:

13. On the receiver, press AXIS A MORE DUAL. Select Axis A on the positioner controller.
14. Move the positioner slowly clockwise (or in the positive direction).

    Watch the HP 85370A display. If the numbers to the right of the decimal point increment, go to the next step. If they count backward, change the position of internal switch S5.
15. If the positioner has only one axis go to "Select ±180° or 0 to 360° Mode".

    If the positioner has a second axis (Axis B), press PRIOR MENU AXIS B MORE DUAL. Select Axis B on the positioner controller.
16. Move the antenna positioner slowly clockwise (or in the positive direction).

    Watch the HP 85370A display. If the numbers to the right of the decimal point increment, go to the next step. If they count backward, change the position of internal switch S6.
17. If your positioner does not have a third axis go to "Select ±180° or 0 to 360° Mode".

    If your positioner has a third axis (Axis C), press PRIOR MENU AXIS C MORE DUAL. Select Axis C on the positioner controller.
18. Move the antenna positioner slowly clockwise (or in the positive direction). Watch the HP 85370A display. If the numbers to the right of the decimal point increment, go to "Select ±180° or 0 to 360° Mode". If the display counts backward, change the position of internal switch S7.

ManualsPlus.com

Configure the Receiver for Proper Encoder Operation

Now you need to check several settings in the HP 8530A Encoder menu.

Select ±180° or 0 to 360° Mode

If the receiver is not already in the Encoder Functions menu, press:

STIMULUS (MENU) ENCODER FUNCTIONS MORE.

A. If the positioner system uses ±180° annotation, press +/-180.

B. If the positioner system uses 0 to 360° annotation, press ANG POL 0-360

Set the Rear Panel DIRECTION switch

The HP 85370A rear panel DIRECTION switch determines which *coordinate system* is used during measurements. Refer to "Coordinate Systems" for more information.

Setting the DIRECTION switch for your coordinate system.

Move the positioner clockwise and watch the HP 85370A display. Is the digital angle readout changing (incrementing or decrementing) properly for your coordinate system? If not, change the DIRECTION switch position.

ManualsPlus.com

Coordinate Systems

The selected coordinate system determines how the receiver and position encoder express measurement angles. Choose between coordinate systems with the rear panel DIRECTION switch. Two different coordinate systems are described.

ManualsPlus.com

The Positioner Coordinate System

The most commonly used coordinate system is the ANSI/IEEE-149-1979 standard. Refer to Figure 2-5. Angles shown on the screen (or plot) are based on the direction the positioner is pointing when data is taken. When the antenna is pointing to the left of boresight, measurement angles are negative. Conversely, when the antenna is pointing to the right of boresight, measurement angles are positive.

As you can see in Figure 2-5, the angles shown on the screen (and on plots) are based on the angle the positioner is pointing. If the positioner is pointing 45 degrees to the left, the angle reads −45 degrees. When pointing straight ahead, the angle is 0 degrees. When the positioner is pointing 45 degrees to the right, the angle reads +45 degrees.

Keep in mind that this system is based on "the world as perceived by the positioner." The results shown using the positioner coordinate system are a mirror image of the *actual* antenna pattern. If you took a polar plot of the antenna's performance, and placed the antenna down right on top of it, the plot would *not* represent the performance of that antenna in a true graphical way. Instead, it would show a mirror image representation.

ManualsPlus.com

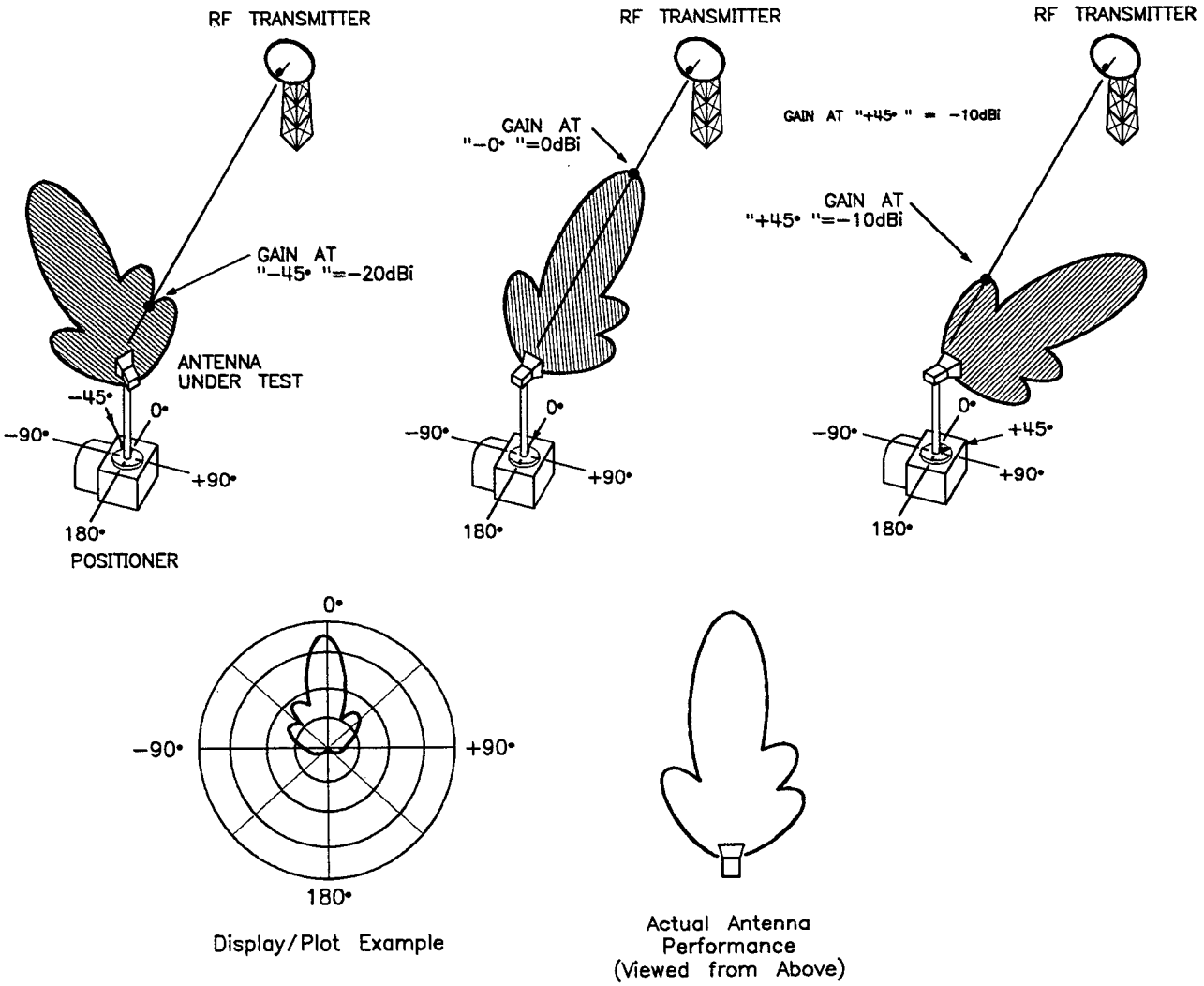

Positioner Coordinate System:
Angular values in this system represent
the direction the positioner was pointing when data was collected.

Figure 2-5. Positioner Coordinate System

ManualsPlus.com

The Antenna Coordinate System

Refer to Figure 2-6. Now consider angles from the perspective of the antenna under test (AUT). The AUT responds to RF energy striking it from a certain direction. If RF energy is coming in from the right, the angle is positive. If RF is coming from the left, the angle is negative.

This system has one advantage: the displayed (or plotted) data is an actual representation of the antenna's pattern, not a mirror image of it.

ManualsPlus.com

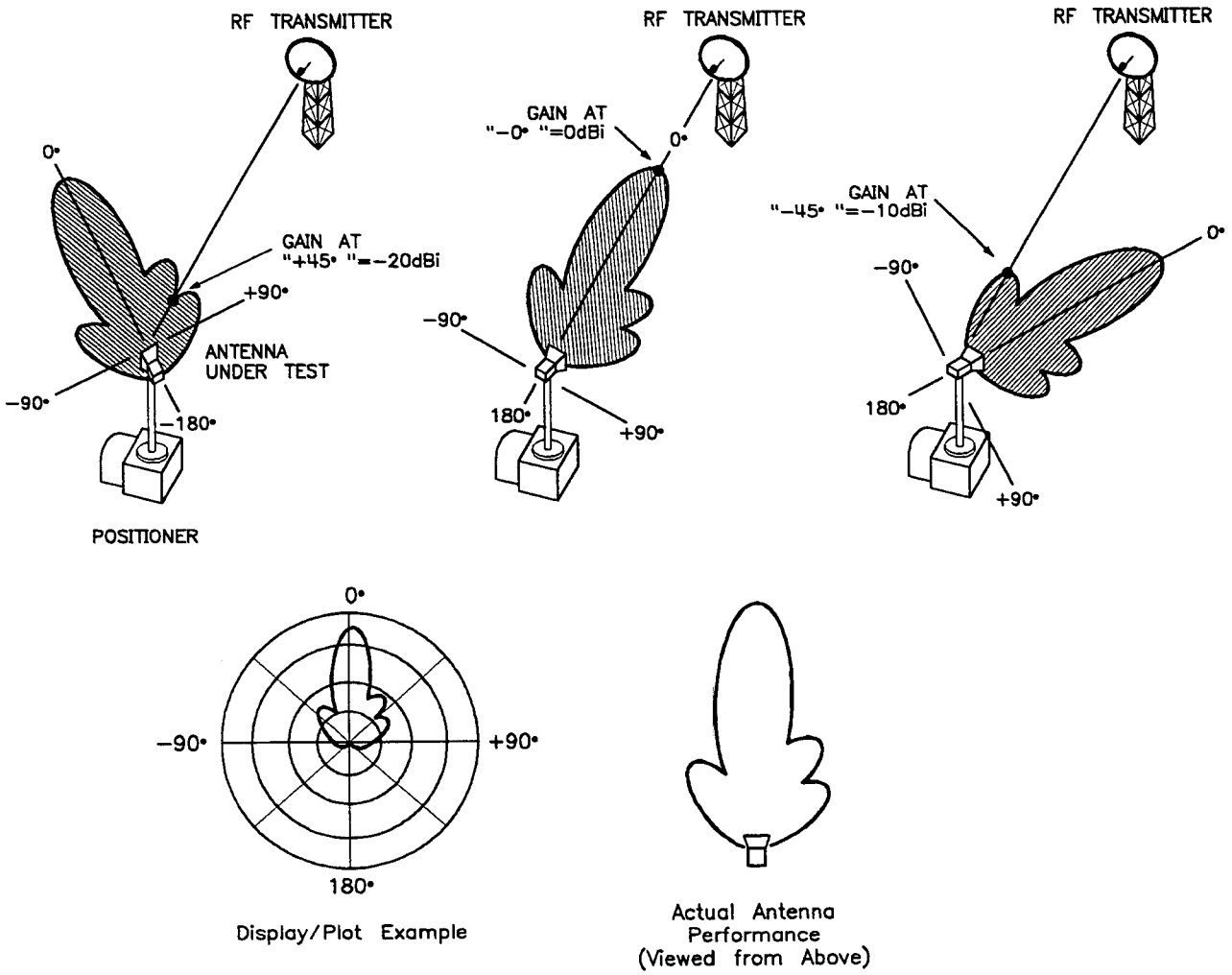

Antenna Coordinate System:
Angular values in this system represent
the angle RF energy arrivers at the antenna.

Figure 2-6. Antenna Coordinate System

ManualsPlus.com

ManualsPlus.com

3

Operation

HP 85370A Position Encoder Operation

Introduction

This chapter describes the HP 8530A softkeys that control the HP 85370A Position Encoder. Remember, the HP 85370A works only when the HP 8530A is equipped with option 005, Position Encoder Interface. This chapter assumes the positioner encoder is installed and configured as explained earlier in this manual.

Note

If external triggers are used, do *not* apply a trigger signal to the HP 8530A EVENT TRIGGER when using the HP 85370A. Apply an external trigger only when using the HP 8530A External Trigger mode.

Position Encoder Softkeys

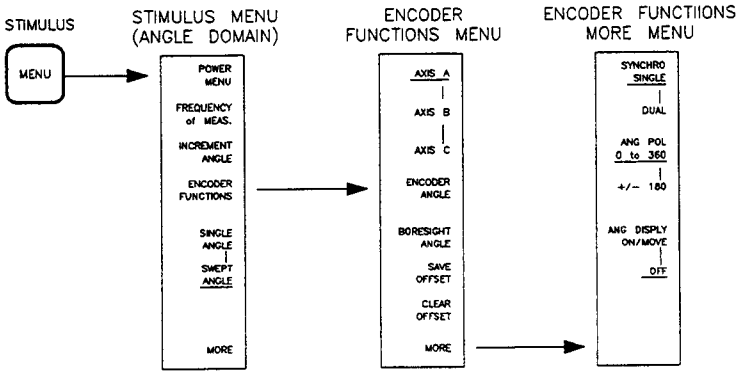

Figure 3-1. Position Encoder (option 005) Softkeys

ManualsPlus.com

To access the Position Encoder menus press:

(DOMAIN) ANGLE
STIMULUS (MENU) ENCODER FUNCTIONS

The position encoder softkeys are:

- Position encoder operation functions:

  AXIS A, AXIS B, or AXIS C
  ENCODER ANGLE and BORESIGHT ANGLE
  SAVE OFFSET and CLEAR OFFSET

- Position encoder configuration functions (press MORE to see these functions):

  SYNCHRO SINGLE or DUAL
  ANG POL 0 to 360 or +/-180
  ANG DISPLY ON/MOVE or OFF

Configuration Functions

Single and Dual Synchro

The single and dual synchro control softkeys are:

SYNCHRO SINGLE	Selects single synchro (1:1) operation. This is also referred to as coarse resolution mode. This setting is applied independently to each axis.
DUAL	Selects dual synchro (1:1 and 36:1) operation. This is also referred to as fine resolution mode. This setting is applied independently to each axis.

Selecting single and dual synchro mode for any axis. (Select single and dual settings independently for each axis.)

1. Press: (DOMAIN) ANGLE
   STIMULUS (MENU) ENCODER FUNCTIONS
2. Select the desired axis by pressing: AXIS A, AXIS B, or AXIS C
3. Press: MORE SYNCHRO SINGLE or DUAL
4. Repeat the last two steps for each axis.

Angle Display Modes

The angle display mode softkeys are:

ANG POL 0 to 360	Causes the HP 8530A and the position encoder to display angles in 0 to 360° format.
+/-180	Causes the HP 8530A and the position encoder to display angles in ±180° format.

ManualsPlus.com

ANG DISPLY ON/MOVE This softkey performs two functions:

1. If angle display is already turned ON, this softkey moves the angle readout to a different position on the display. There are five different positions.

2. It turns the angle readout ON if it was previously OFF. This affects the HP 8530A display.

From the Encoder More menu, press ANG DISPLY ON/MOVE. The position of the angle readout changes. There are five possible positions. One of the positions is above the Time/Date box, in the lower right-hand corner of the screen. This position cannot be seen if softkeys are being displayed. Press (PRIOR MENU) until the softkey menus disappear, and you will be able to see the angle readout.

OFF Turns the HP 8530A angle display OFF.

Operational Functions

Axis Controls

AXIS A, AXIS B and AXIS C select the axis that is currently in use. Angles are displayed for the selected axis on the HP 8530A and on the position encoder. When changing between axes, the receiver recalls any previously used offset, (described later) and which synchro mode was selected, (single or dual).

Boresight Angle

BORESIGHT ANGLE places the active marker at the peak of the antenna pattern. This is the first step during boresighting. Once the active marker is at the peak, this value can be saved as an offset. Subsequent measurements will show the peak at 0°. BORESIGHT ANGLE turns OFF any delta markers that are in use.

The normal marker features may also be used to place an active marker on boresight. It is easiest to find boresight using normal marker functions if the antenna has a non-symmetrical shape.

Use this function during boresighting when using swept angle mode. This command places the active marker at the current position range of the displayed trace. If this angle is out of the display range it will put the active marker to the start angle. This function turns OFF any delta markers that are in use. It can also be used to enter an offset angle using the numeric keys.

ManualsPlus.com

Offset Functions

The softkeys that control angle offset are shown below:

SAVE OFFSET

For use after boresighting. SAVE OFFSET "zeros" the angle readout on the receiver and position encoder. *The offset does not take effect until the next angle scan of the positioner.* This step would be performed after using the BORESIGHT ANGLE or ENCODER ANGLE keys. (The active marker may also be moved to boresight manually, then use SAVE OFFSET.) You may also press:

ENCODER ANGLE *n* (X1) SAVE OFFSET, where *n* is the desired angle.

For example, assume boresight for axis A is at +7 degrees. and the active marker has been placed at that position (using normal marker functions or BORESIGHT ANGLE).

Pressing SAVE OFFSET (and taking another sweep) would cause boresight to appear at 0°. All angle readings will be displayed relative to that angle (for that axis only).

CLEAR OFFSET

Clears the offset memory completely and eliminates any offset currently in use for the displayed axis.

Details about Save Offset

Offsets are axis independent. Save Offset operates independently for each of the three axes. The receiver also remembers the offsets you used last for each axis.

Adding incremental offsets. If conditions cause the boresight to change, move the active marker to the new boresight (manually, or with BORESIGHT ANGLE, or ENCODER ANGLE), and press SAVE OFFSET again. The incremental change will be added to the offset. SAVE OFFSET remembers the first offset used, and adds or subtracts subsequent SAVE OFFSET values incrementally to the original value.

Here is an example of how Save Offset works. Assume boresight for axis A is at +7°. Move the active marker to that angle (by whatever means) and press SAVE OFFSET and measure another sweep. Boresight will now appear to be at 0° (angle readings are offset by 7°).

Later in the day you change antennas, and boresight moves 1° in a positive direction. If a marker is placed at that point, and

ManualsPlus.com

SAVE OFFSET is pressed again, the offset will change by 1°, for a total offset of 8°. Remember, the change will not take effect until the next angle scan.

CLEAR OFFSET clears the offset memory, so a new starting offset may be entered. Offset is actually cleared on the next angle scan.

The offset value is saved with the instrument state when the (SAVE) and (RECALL) keys are used. This allows different offsets to be saved in the Save/Recall registers for later use.

Encoder Settings and Save/Recall Registers

All the encoder configuration and operational settings are saved when the Save/Recall registers are used.

ManualsPlus.com

ManualsPlus.com

4

HP-IB Programming Codes and In-Depth Descriptions

The following chapter discusses:

- HP-IB Programming Codes
- Query Commands

The HP-IB Programming Codes shows the programming codes that apply directly to the HP 85370A and its functions. These codes are contained in the HP 8530A Receiver. To perform any of the following commands, send the command to the HP 8530A from a HP-IB controller. For more information on notation used in these entries, see the *HP 8530A Keyword Dictionary*. For more information on programming the HP 8530A, see the *HP 8530A Operating and Programming* manual.

The Query Commands shows programming codes that can be used with the HP 8530A to query the HP 85370A.

ManualsPlus.com

60 dB PATTERN

Change reference and scale settings so a 60 dB pattern can be seen.

Programming Code PATT60

Main Menu RESPONSE

Program Sequence

```
PATT60;
```

Manual Sequence RESPONSE (MENU)
60 dB PATTERN

Description

Preset	N/A	**Range**	N/A
Initialized	N/A	**Recalled**	N/A
Coupled	always uncoupled		

This key sets the reference line at the top of the display and sets the value of the reference line to 0 dB. If (LOG MAG) is selected, scale is set to 6 dB/division. If a polar display is selected, scale is set to 12 dB/division. This key instantly displays a 60 dB range, from 0 dB to −60 dB.

See Also NORMALIZE: ALL TO ACT. TRACE, NORMALIZE: ACT. TRACE
40 dB PATTERN

ManualsPlus.com

ANG DISPLY OFF

Select OFF to turn the angle display OFF on the HP 8530A.

Programming Code ANGDOFF

Main Menu STIMULUS MENU

Programming Sequence

```
ANGDOFF;
```

Manual Sequence

STIMULUS (MENU)
ENCODER FUNCTIONS
MORE
ANG DISPLY OFF

Description

Preset	ON	Range	N/A
Initialized	ON	Recalled	yes
Coupled	always coupled		

OFF turns the HP 8530A angle display OFF. This command does not affect the HP 85370A position encoder.

See Also ANG POL 0 to 360, +/-180, ANG DISPLY ON/MOVE

ManualsPlus.com

ANG DISPLY ON/MOVE

Turn the receiver's angle readout ON, or move it to a different location on the display.

Programming Code ANGDON

Main Menu STIMULUS MENU

Programming Sequence

```
ANGDON;
```

Manual Sequence

STIMULUS (MENU)
ENCODER FUNCTIONS
MORE
ANG DISPLY ON/MOVE

Description

Preset	ON	**Range**	N/A
Initialized	ON	**Recalled**	yes
Coupled	always coupled		

ANG DISPLY ON/MOVE performs two functions:

1. It turns the angle readout ON if it was previously OFF. This affects the HP 8530A display only, and does not affect the HP 85370A angle display.
2. If angle display is already turned ON, this softkey moves the angle readout to a different position on the receiver's display. There are five different positions. One of these positions cannot be seen if there are softkey menus displayed on the screen. To see the angle readout in this position, press (PRIOR MENU) until the softkey labels disappear.

See Also ANG POL 0 to 360, +/-180, ANG DISPLY OFF

ManualsPlus.com

ANG POL 0 to 360

Selects 0 to 360 degree display mode for the position encoder (and receiver) angle display readouts.

Programming Code ANGP360

Main Menu STIMULUS MENU

Programming Sequence

```
ANGP360;
```

Manual Sequence

STIMULUS (MENU)
ENCODER FUNCTIONS
MORE
ANG POL 0 to 360

Description

Preset	±180°	**Range**	N/A
Initialized	±180°	**Recalled**	yes
Coupled	always coupled		

ANG POL 0 to 360 causes the HP 8530A and the position encoder to display angles in 0 to 360° mode.

See Also ANG POL +/-180, ANG DISPLY ON/MOVE

ManualsPlus.com

ANG POL +/-180

Selects ±180° display mode for the position encoder and receiver angle display readouts.

Programming Code ANGP180

Main Menu STIMULUS MENU

Programming Sequence

```
ANGP180;
```

Manual Sequence

STIMULUS (MENU)
ENCODER FUNCTIONS
MORE
ANG POL +/-180

Description

Preset	±180°	**Range**	N/A
Initialized	±180°	**Recalled**	yes
Coupled	always coupled		

ANG POL +/-180 causes the HP 8530A and the position encoder to display angles in ±180° mode.

See Also ANG POL 0 to 360, ANG DISPLY ON/MOVE

ManualsPlus.com

AXIS A

Select Axis A for HP 85370A position encoder operation.

Programming Code AXISA

Main Menu STIMULUS MENU

Programming Sequence

```
AXISA;
```

Manual Sequence

STIMULUS (MENU)
ENCODER FUNCTIONS
AXIS A

Description

Preset	axis A	Range	N/A
Initialized	axis A	Recalled	yes
Coupled	always coupled		

AXIS A tells the HP 85370A Position Encoder to "listen" to the Axis A synchro lines. The encoder converts the synchro signal into angular information, displays it, and updates the angle display on the receiver CRT. The receiver remembers the selected offset and synchro single/dual configuration independently for each axis.

See Also AXIS B, AXIS C

ManualsPlus.com

AXIS B

Select Axis B for HP 85370A position encoder operation.

Programming Code AXISB

Main Menu STIMULUS MENU

Programming Sequence

```
AXISB;
```

Manual Sequence

STIMULUS (MENU)
ENCODER FUNCTIONS
AXIS B

Description

Preset	axis A	**Range**	N/A
Initialized	axis A	**Recalled**	yes
Coupled	always coupled		

AXIS B tells the HP 85370A Position Encoder to "listen" to the Axis B synchro lines. The encoder converts the synchro signal into angular information, displays it, and updates the angle display on the receiver CRT. The receiver remembers the selected offset and synchro single/dual configuration independently for each axis.

See Also AXIS A, AXIS C

ManualsPlus.com

AXIS C

Select Axis C for HP 85370A position encoder operation.

Programming Code AXISC

Main Menu STIMULUS MENU

Programming Sequence

```
AXISC;
```

Manual Sequence

STIMULUS (MENU)
ENCODER FUNCTIONS
AXIS C

Description

Preset	axis A	Range	N/A
Initialized	axis A	Recalled	yes
Coupled	always coupled		

AXIS C tells the HP 85370A Position Encoder to "listen" to the Axis C synchro lines. The encoder converts the synchro signal into angular information, displays it, and updates the angle display on the receiver CRT. The receiver remembers the selected offset and synchro single/dual configuration independently for each axis.

See Also AXIS A, AXIS B

ManualsPlus.com

BEAM/BAND WIDTH

Finds the target value bandwidth of the display trace in the frequency domain. Finds the target value beamwidth of the display trace in the angle domain.

Programming Code BANDWIDTH

Main Menu MARKER

Programming Sequence BANDWIDTH;

Manual Sequence

(MARKER)
MORE
BEAM/BAND WIDTH

Description

Preset	OFF	**Range**	N/A
Initialized	OFF	**Recalled**	yes
Coupled	always coupled		

If the receiver is in the frequency domain, this key finds the bandwidth of the display trace. The bandwidth value is set by the TARGET VALUE key. If the receiver is in the angle domain, this key finds the beamwidth of the display trace. The beamwidth value is set by the TARGET VALUE key. This function uses marker 3, marker 4, and marker 5. If any of these markers are active when the BEAM/BAND WIDTH function is executed they will be reset by this function. This function also makes the markers continuous.

This function only works in the frequency domain with a logrithmic display (LOG MAG, LOG POLAR).

ManualsPlus.com

BORESIGHT ANGLE

Sets the active marker to the peak of the displayed trace.

Programming Code BOREANG

Main Menu STIMULUS MENU

Programming Sequence

```
BOREANG;
```

Manual Sequence

STIMULUS (MENU)
ENCODER FUNCTIONS
BORESIGHT ANGLE

Description

Preset	N/A	**Range**	−360° to +360°
Initialized	N/A	**Recalled**	yes
Coupled	N/A		

BORESIGHT ANGLE is similar to the "Marker to Peak" function in the Marker Menus. Use this function during boresighting, when using swept angle mode. This command places the active marker at the peak of the displayed trace. This function turns OFF any delta markers that are in use. This function also makes the markers continuous.

See Also MARKER TO PEAK, SAVE OFFSET

ManualsPlus.com

CLEAR OFFSET

Clear the "Save Offset" memory.

Programming Code CLEAROFS

Main Menu STIMULUS MENU

Programming Sequence

```
CLEAROFS;
```

Manual Sequence

STIMULUS (MENU)
ENCODER FUNCTIONS
CLEAR OFFSET

Description

Preset	offset cleared	**Range**	N/A
Initialized	offset cleared	**Recalled**	yes
Coupled	always coupled		

CLEAR OFFSET clears the offset memory completely for the currently selected axis only. This eliminates any offset currently in use for that axis. Clear Offset does not take effect until the next angle scan (on that axis).

See Also SAVE OFFSET

ManualsPlus.com

ENCODER ANGLE

Sets the active marker to the current angle on the displayed trace.

Programming Code ENCANGC

Main Menu STIMULUS MENU

Programming Sequence

```
ENCANGC;
```

Manual Sequence STIMULUS (MENU)
ENCODER FUNCTIONS
ENCODER ANGLE

Description

Preset	N/A	Range	N/A
Initialized	N/A	Recalled	yes
Coupled	Always		

Use this function during boresighting when using swept angle mode. This command places the active marker at the current position range of the displayed trace. If this angle is out of the display range it will put the active marker to the start angle. This function turns OFF any delta markers that are in use. It can also be used to enter an offset angle using the numeric keys.

See Also BORESIGHT ANGLE, SAVE OFFSET

ManualsPlus.com

ENCODER FUNCTIONS

Presents encoder menu.

Programming Code

None

Main Menu

STIMULUS MENU

Programming Sequence

None

Manual Sequence

STIMULUS (MENU)
ENCODER FUNCTIONS

Description

Preset	N/A	**Range**	N/A
Initialized	N/A	**Recalled**	N/A
Coupled	N/A		

Presents encoder menu and verifies option 005 is installed and operating.

See Also

ManualsPlus.com

OUTPENCAR

Programming Code OUTPENCAR

Main Menu None (HP-IB only)

Programming Sequence `OUTPENCAR;` *(read data from HP-IB)*

Manual Sequence None (HP-IB only)

Description

Preset	N/A	**Range**	N/A
Initialized	N/A	**Recalled**	N/A
Coupled	N/A		

Outputs real ASCII number for the current encoder angle. This includes any offset angle. The data is in the format `XXX.XX`.

See Also OUTPENCAO

ManualsPlus.com

OUTPENCAO

Programming Code OUTPENCAO

Main Menu None (HP-IB only)

Programming Sequence `OUTPENCAO;` *(read data from HP-IB)*

Manual Sequence None (HP-IB only)

Description

Preset	N/A	**Range**	N/A
Initialized	N/A	**Recalled**	N/A
Coupled	N/A		

Outputs real ASCII number for the current offset angle. The data is in the format `XXX.XX`.

See Also OUTPENCAR

ManualsPlus.com

SAVE OFFSET

Zeros the angle readout on the receiver and position encoder.

Programming Code SAVEOFS

Main Menu STIMULUS MENU

Programming Sequence

```
SAVEOFS;
```

Manual Sequence

STIMULUS (MENU)
ENCODER FUNCTIONS
SAVE OFFSET

Description

Preset	offset cleared	**Range**	−360° to +360°
Initialized	offset cleared	**Recalled**	yes
Coupled	always coupled		

SAVE OFFSET zeros the angle readout on the receiver and position encoder by saving the offset angle and subtracting it from the positioner angle. *The offset does not take effect until the next sweep.* This step would be performed after using the BORESIGHT ANGLE or ENCODER ANGLE key. (You could also move the active marker to boresight manually, then use SAVE OFFSET.)

For example, assume boresight for axis A is at +7 degrees and you have placed the active marker at that position (using normal marker functions or BORESIGHT ANGLE). Pressing SAVE OFFSET (and taking another sweep) would cause boresight to appear at 0°. All angle readings will be displayed relative to that angle (for that axis only).

See Also CLEAR OFFSET, BORESIGHT ANGLE, ENCODER ANGLE

ManualsPlus.com

SYNCHRO DUAL

Select dual synchro operation for the currently selected axis.

Programming Code SYNCHDUAL

Main Menu STIMULUS MENU

Programming Sequence

```
SYNCHDUAL;
```

Manual Sequence

STIMULUS (MENU)
ENCODER FUNCTIONS
MORE
SYNCHRO DUAL

Description

Preset	synchro single	**Range**	N/A
Initialized	synchro single	**Recalled**	yes
Coupled	always coupled		

SYNCHRO DUAL selects dual synchro (1:1, 36:1) operation for the currently selected axis. This is also referred to as fine resolution mode. This setting is applied independently to each axis.

See Also SYNCHRO SINGLE

ManualsPlus.com

SYNCHRO SINGLE

Select single synchro operation for the currently selected axis.

Programming Code SYNCHSING

Main Menu STIMULUS MENU

Programming Sequence

```
SYNCHSING;
```

Manual Sequence

STIMULUS (MENU)
ENCODER FUNCTIONS
MORE
SYNCHRO SINGLE

Description

Preset	synchro single	**Range**	N/A
Initialized	synchro single	**Recalled**	yes
Coupled	always coupled		

SYNCHRO SINGLE selects single synchro (1:1) operation for the currently selected axis. This is also referred to as course resolution mode. This setting is applied independently to each axis.

See Also SYNCHRO DUAL

ManualsPlus.com

New Query Commands

NOTE: In the following table ⊔ represents a single space.

COMMAND	FUNCTION	RESPONSE
ENCAXIS?;	Current selected axis	"AXIS⊔A" "AXIS⊔B" "AXIS⊔C"
ENCDISPOL?;	Current angle display mode	"0⊔TO⊔360" "+/−180"
ENCPRES?;	Is option 005 and HP 85370A installed?	"YES" if both are present. "NO" if either is missing.
ENCSYNCH?;	Current synchro type selected	"SINGLE" "DUAL"

ManualsPlus.com

Caution/Tell Messages

When a message appears, press (ENTRY OFF) to clear the message from the CRT or program OUTPERRO and read the error number. All "Tell" messages are error number 0.

Number	Message String
117	TRIGGER TOO FAST
	Triggers arriving too fast for the receiver. Slow down trigger pulses. Check for ringing on trigger pulse or multiple trigger sources. If using an HP 85370A do *not* use EVENT TRIGGER.
155	BAD RCS CAL STANDARD TABLE LIMITS
156	OVERSPEED ERROR---BACKUP
	The positioner is being moved too fast. The HP 85370A Position Encoder cannot track the measurement. Overspeed conditions may occur when the measurement uses high averaging factors with small increment angles. To correct the error: 1. Stop forward movement. 2. Move the positioner backward until the receiver beeps. 3. Continue the measurement with either a slower rate or a smaller averaging factor.
157	OPTION #005 NOT INSTALLED
	The position encoder functions cannot be used unless the HP 8530A is equipped with option 005. This message is displayed if the HP 8530A does not have option 005 installed. Option 005 adds a new printed circuit board to the HP 8530A, and adds a new rear panel connector (ENCODER INTERCONNECT). Contact your HP sales representative for more information.
158	ENCODER NOT FOUND
	The HP 85370A Position Encoder is not connected to the back of the HP 8530A.
159	BEAM WIDTH NOT VALID IN THIS FORMAT
	This function is only available in log format displays (LOG MAG, LOG POLAR).

ManualsPlus.com

ManualsPlus.com

5

In Case of Difficulty

Before Doing Anything Else

Please be sure to check the unit to make sure it is installed properly. Most problems are caused by improper installation or improper configuration. If the encoder display skips numbers, or counts improperly, it is probably due to an internal configuration switch being set improperly.

Carefully check the installation, making sure the synchro cables are fully seated.

Go through "Configure the Receiver for Proper Encoder Operation" in Chapter 2, earlier in this book. Many apparent failures can be caused by improper configuration.

ManualsPlus.com

Error Messages

The following error messages are related to the HP 85370A Position Encoder:

ABORTED ENCODER TRIGGERED SWEEP
This message is displayed if modes are changed in the middle of a sweep. For example, if frequency domain is selected instead of angle domain.

BEAM WIDTH NOT VALID IN THIS FORMAT
This function is only available in log format displays (LOG MAG, LOG POLAR).

ENCODER NOT FOUND
The HP 85370A Position Encoder is not connected to the back of the HP 8530A.

ENCODER OFFSET ANGLE ALREADY SAVED
The receiver does not allow you to press `SAVE OFFSET` twice *in the same sweep*, unless you clear the first offset. If you want to change the offset value (without taking another sweep), press `CLEAR OFFSET`, then `SAVE OFFSET`.

OPTION #005 NOT INSTALLED
The position encoder functions cannot be used unless the HP 8530A is equipped with option 005. This message is displayed if the HP 8530A does not have option 005 installed. Option 005 adds a new printed circuit board to the HP 8530A, and adds a new rear panel connector (ENCODER INTERCONNECT). Contact your HP sales representative for more information.

OVERSPEED ERROR—BACKUP
The positioner is being moved too fast. The HP 85370A Position Encoder cannot track the measurement. Overspeed conditions may occur when the measurement uses high averaging factors with small increment angles. To correct the error:

1. Stop forward movement.
2. Move the positioner backwards until the receiver beeps.
3. Continue the measurement with either a slower rate or a smaller averaging factor.

TRIGGER TOO FAST
Triggers arriving too fast for receive. Slow down trigger pulses. Check for ringing on trigger pulse or multiple trigger sources. If using an HP 85370A do *not* use EVENT TRIGGER.

ManualsPlus.com

6

Service

This chapter explains six main topics:

- Theory of Operation (how the positioning system and antenna position encoder works).
- Recommended Test Equipment (the equipment required for servicing this instrument).
- Troubleshooting (how to determine which part of the positioning system, or antenna position encoder, is faulty).
- Replaceable Parts (how to identify and order parts).
- Assembly Replacement Procedures and Adjustments (how to replace failed assemblies and how to make any adjustments required).
- Performance Verification (how to verify that the antenna position encoder system is working properly).

Warning

Synchro signals of 90 to 120 V rms are present on some points inside the HP 85370A. These voltages can cause injury or even death. Use extreme caution when servicing this instrument.

ManualsPlus.com

System Theory of Operation

The HP 85370A Antenna Position Encoder converts the synchro signals from an antenna positioner into digital information for the HP 8530A. The HP 8530A reads this information and displays the angle information on the HP 85370A and on the HP 8530A display. The HP 8530A can also use this information to trigger a measurement.

The synchro in the positioner provides a three wire output, as shown in Figure 6-1. The synchro uses a 120 Vac 60 cycle reference voltage, *R1* and *R2* as an excitor. The voltage outputs of *S1*, *S2*, and *S3* amplitude varies with the angular position of the shaft (θ), with respect to some reference shaft position, called 0° of rotation. Each output voltage is approximately:

V_{1-3}=K sin (θ) sin (2πft)

V_{2-3}=K sin (θ+120°) sin (2πft)

V_{2-1}=K sin (θ−120°) sin (2πft)

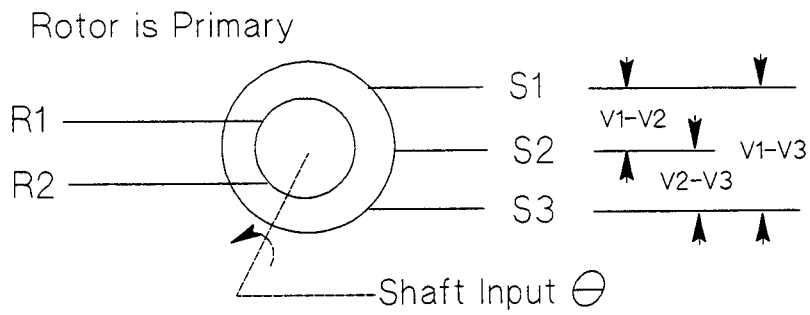

Figure 6-1. Single Speed Synchro Diagram

ManualsPlus.com

Some positioners use dual synchros, or multiple speed synchros. This synchro system, shown in Figure 6-2, uses two synchros. The Coarse Synchro is the same synchro discussed earlier, with the output voltages proportional to the full rotation of the positioner. The Fine Synchro is geared down 36:1 from the Coarse Synchro. It will rotate 36 times for one rotation of the Course Synchro. The use of both synchro signals allows a finer resolution of the positioner rotation.

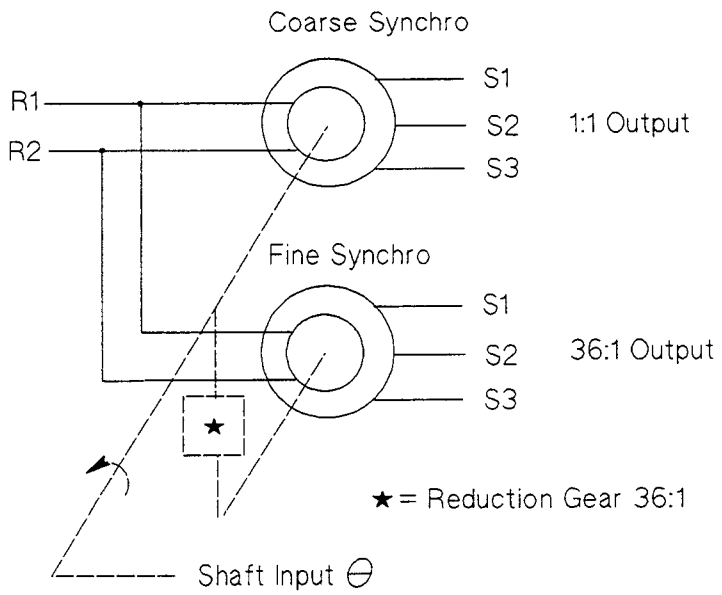

Figure 6-2. Dual Speed Synchro Diagram

ManualsPlus.com

The block diagram of the HP 85370A is shown in Figure 6-3. Each section of this encoder system is discussed.

The synchro board converts the *S1*, *S2*, and *S3* analog signals to digital information. The configuration switches, S2 through S7, allows the encoder to quickly adapt to synchros with reversed *S1* and *S3* signals. The encoder can also adapt to reversed reference *R1* and *R2* signals using the switch S8. The axis select switch can select between three different positioner axis synchro systems.

The display board can display the selected axes' angle. It does this by combining the actual positioner angle with an offset angle from the HP 8530A. The offset angle can be zero degrees, or any boresight angle. The translator converts the digital information to a format usable by the LED display. It also allows conversion between a ±180° and a 0–360° display format.

The interface board is in the HP 8530A. It controls the input/output bus to the encoder board in the HP 8530A. It also compares the actual positioner angle to any expected angle. If the two angles match a trigger is generated. This is typically used to trigger angle domain measurements.

ManualsPlus.com

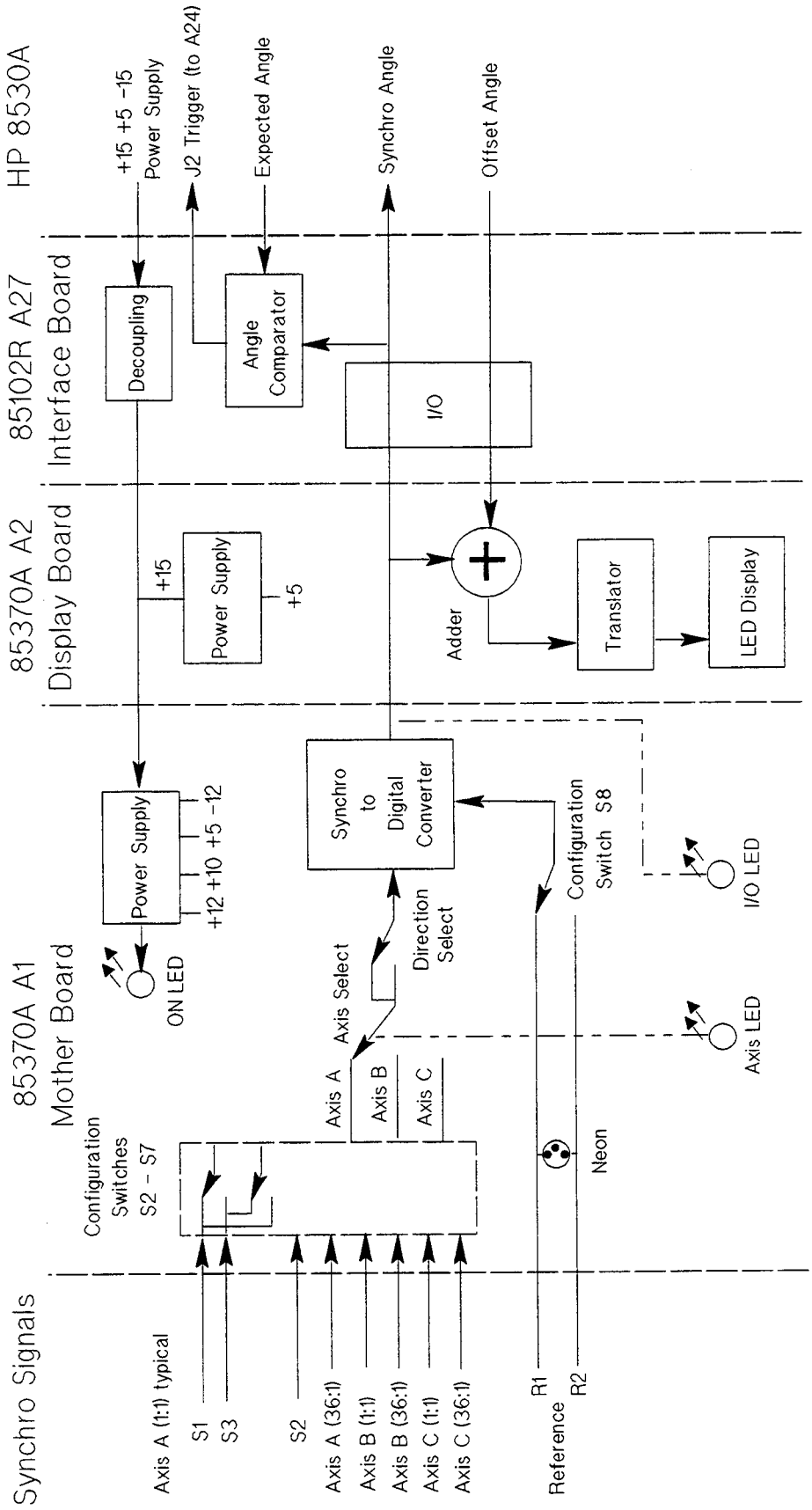

Figure 6-3. Antenna Position Encoder Block Diagram

ManualsPlus.com

Recommended Test Equipment

The following table lists major instruments required for supporting the HP 85370A and the HP 8530A option 005. Other instruments can be used if they meet or exceed the critical specifications shown in the table. "No substitute" means you *must* use the listed HP device. Miscellaneous adapters and cables are also required.

Table 6-1. Recommended Test Equipment

Item	Critical Specification	Recommended Model (or Part Number)	Use[1]
Receiver	No substitute	HP 8530A option 005	I,O,P,T
Positioning system	Synchro outputs	none	I,O,P,T
Digital multimeter	Range: 0 to 240 V ac	HP E2378A	T
Oscilloscope	100 MHz bandwidth, digital	HP 54600 series	T

1 I = installation
O = operation
P = performance verification test
T = troubleshooting and repair

The following tools will be required for servicing the HP 85370A:

Table 6-2. Disassembly Tools Needed

Tool	HP Part Number
Large Pozidrive	8710-0900
Small Pozidrive	8710-0899
T-10 TORX driver	8710-1623
T-15 TORX driver	8710-1622
Small flat blade screwdriver	8730-0008
Needlenose pliers	8710-0595
7/32-inch wrench	8710-0980
3/16-inch wrenches (Qty 2)	8720-0013

ManualsPlus.com

Troubleshooting Instrument Failures

This troubleshooting section allows you to quickly find a failure in the encoder or HP 8530A option 005 board. For more detailed information on each assembly see Figure 6-3. The section, "Assembly Replacement Procedures and Adjustments", shows how to remove and replace the assemblies.

"Troubleshooting a Failure"
: If the cause of the failure is unclear, go the "Troubleshooting a Failure" section. This section lists common failures and the assembly which might be causing the failure.

"Testing an Assembly"
: This section shows you how to test each assembly. If you feel you know which assembly has failed, or if the "Troubleshooting a Failure" section points to a potential assembly failure, this section will show you how to test the assembly. These tests will find the more common failures. If you are unsure of the failure, replace the entire board.

Assumptions

This section assumes the system operated properly in the past, and only one instrument or HP 85370A assembly has failed. If the system has never operated properly, review the Chapter 2 and Chapter 5 chapters in this manual.

Warning

Synchro signals of 90 to 120 V rms are present on some points inside the HP 85370A. These voltages can cause injury or even death. Use extreme caution when servicing this instrument.

Caution

The assemblies used in the HP 85370A are static sensitive. Use anti-static techniques when performing the following procedures. For example, wear an anti-static ground strap and work at a station equipped with an anti-static mat.

Troubleshooting a Failure

This section shows potential problems or failures. It then lists various assemblies that may be causing the problem. Please note that more than one assembly could be causing the problem. Further testing in the next section, "Testing an Assembly", will show the actual failure.

Before continuing this troubleshooting section, make sure the HP 85370A is installed correctly, see "Installing the Encoder" in Chapter 2. Also be sure that it is being operated correctly as shown in Chapter 3. Check the power supplies first, to make sure they are

ManualsPlus.com

operating correctly. This instrument contains five different power supplies. One supply can fail but the instrument may still appear to be working properly.

Angle display not working on HP 85370A

See:

HP 85370A A1:	Power Supply, HP 85370A
A2:	Power Supply, LED Display.

Angle display not working on HP 8530

See:

HP 85370A A1:	Data Bus
HP 8530A option 005:	I/O.

Boresight angle incorrect

See:

HP 85370A A2:	Adder, Translator.

Incorrect angle from the positioning system

See:

HP 85370A A1:	Configuration Switches, Synchro to Digital Converters,
HP 85370A A2:	Adder, Translator.

Incorrect axis section

See:

HP 85370A A1:	Data Bus, Configuration Switches, Axis Select and Direction Switch relays
HP 8530A option 005:	I/O.

Measurements (HP 8530A) not being made at the correct increment angle

See:

HP 8530A option 005:	Angle Comparator.

Measurements (HP 8530A) not being made at any increment angle

See:

HP 8530A option 005:	Angle Comparator.

Not reading angle from the positioning system

See:

HP 85370A A1:	Power Supply, Data Bus
HP 8530A option 005:	I/O, Decoupling.

ManualsPlus.com

Not reading the correct angle from the positioning system

See:

HP 85370A A1:	Synchro to Digital Converters
HP 85370A A2:	Adder, Translator.

Offset angle incorrect

See:

HP 85370A A1:	Synchro to Digital Converters
HP 85370A A2:	Adder, Translator, LED Display.

The following HP 8530A error messages are related to the HP 85370A Position Encoder failures:

ENCODER NOT FOUND
The HP 85370A Position Encoder is not connected to the back of the HP 8530A, or the synchro board or cable has failed.

OPTION #005 NOT INSTALLED
The position encoder functions cannot be used unless the HP 8530A is equipped with option 005. This message is displayed if the HP 8530A does not have option 005 installed.

Testing an Assembly

The following section describes how to test each part of the HP 85370A and HP 8530A option 005 assembly. There are multiple assemblies on each printed circuit board. If an assembly is found to have failed the entire board must be replaced. Always check the power supplies first.

HP 85370A A1 Motherboard

The following HP 8530A error messages are related to the HP 85370A Position Encoder failures:

ENCODER NOT FOUND
The HP 85370A Position Encoder is not connected to the back of the HP 8530A, or the synchro board has failed.

Power Supply. Most of the power supply test points are contained on the A1 Mother board, on the right hand side as viewed from the front. The power supply contains both LED displays, as well as measurement test points. The table below shows the power supply test points and also the power supplies that feed each test point.

ManualsPlus.com

Table 6-3. A1 Power Supply Voltages

Supply Voltage	LED	Test Point	Voltage	Voltage Source
Ground		GND		
−15	−15	−15	−15 ±0.1 Vdc	from 85102R A27
−12		−12	−12 ±0.1 Vdc	from 85370A A1U10
+5	+5	+5	+5 ±0.1 Vdc	from 85102R A27
+10	+10	+10	+10 ±0.1 Vdc	from 85370A A1U23
+12		+12	+12 ±0.1 Vdc	from 85370A A1U9
+15	+15	+15	+15 ±0.1 Vdc	from 85102R A27
90 Vac	Neon	DS10	depends on synchros	from synchros

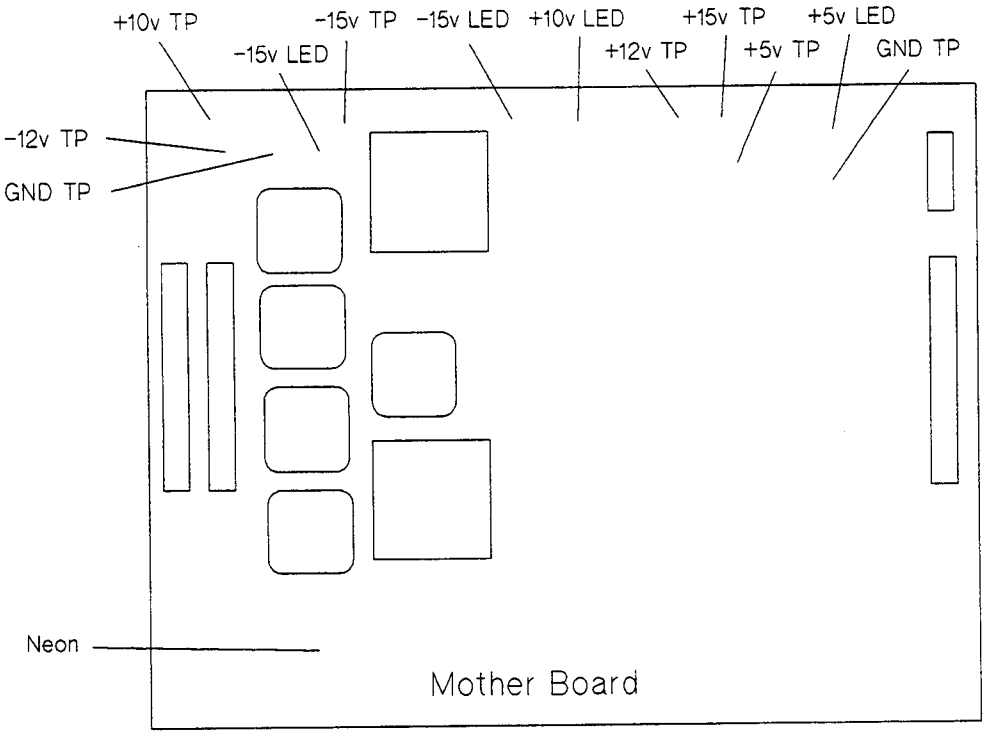

Figure 6-4. Power Supply Test Points

ManualsPlus.com

LED Displays. Each of the front panel LEDs are controlled from the motherboard. Check each of them as follows:

ON

The ON LED should light whenever the HP 8530A is turned on. Check the A1 "Power Supply" section, or the HP 85370A/HP 8530A encoder interconnect cable.

AXIS

The Axis LED shows which positioner axis is selected. To check these LEDs press:

STIMULUS (MENU)

```
ENCODER FUNCTIONS
 AXIS A
 AXIS B
 AXIS C
```

The appropriate LED should light. Check the A1 "Power Supply" or "Axis Select and Direction Switch Relays" section if there is a problem.

I/O

The I/O LED lights when the HP 8530A is communicating with the HP 85370A. It should be on whenever the HP 85370A is being used. This LED does not light very brightly. It may be necessary to shield the LED from the room light so it can be seen. If this LED is not on, check the A1 "Power Supply", "Synchro to Digital Converters", or "Data Bus" sections of this manual.

Configuration Switches. The configuration switches, S2 through S7 allow the encoder to quickly adapt to synchros with reversed *S1* and *S3* signals. The encoder can also adapt to reversed reference *R1* and *R2* signals using the switch S8. See Figure 6-3 for more detail on these switches.

To check these switch configurations, select each positioner axis on the HP 85370A by pressing:

STIMULUS (MENU)

```
ENCODER FUNCTIONS
AXIS x
```

Slowly rotate the selected axis on the positioner. Watch the display on the HP 85370A, if the numbers count forward, then backward, then forward again, the switches may be incorrectly set.

Perform an installation as shown in "Installing the Encoder" in Chapter 2. If the selection of these switches, as shown in that chapter, does not work correctly, then a switch is faulty.

ManualsPlus.com

Axis Select and Direction Switch Relays.

Axis Selection

The axis selection in the HP 85370A is controlled by the HP 8530A through the data bus. When an axis is selected, the appropriate relay (K1 to K4) is switched. See Figure 6-5 for more detail. Note that the relays are simplified in the figure. Each relay is a two-pole, two-throw switch.

To check these relays, select each axis from the HP 8530A. Listen and watch for the switching of the relays. If a relay fails to switch, check the relay by swapping with another relay. If the relay is good, replace the A1 motherboard.

You may also verify the correct relay is switching by watching the display on the HP 85370A. When each axis is selected, the display should update to the correct angle for the selected axis.

To verify the relay control lines are being set correctly, look at the HP 85370A front panel. As each axis is selected the appropriate axis LED should light. If the LED is not lighting appropriately, then check the control lines to the A1 board. See Table 6-4 for information on the switching. If the lines are not switching correctly, replace the HP 8530A option 005 interface board 85102R A27.

Table 6-4. Axis Select Control Lines

Control Line	Axis A	Axis B	Axis C
A1J1 pin 21	L	L	H
A1J1 pin 22	L	H	—

Direction Select

The direction selection in the HP 85370A is controlled by the DIRECTION switch on the rear panel of the HP 85370A. Changing this switch will cause relay K5 to switch. See Figure 6-5 for more detail. Note that the relay is simplified in the figure. This relay is a four-pole, two-throw switch.

To check the action of this relay, change the DIRECTION switch on the rear panel. Listen and watch for the switching of this relay. If it fails to switch, swap with another relay. If the relay is broken, replace the relay. If the relay is good, check the rear panel switch.

You may also verify it is switching correctly by rotating the positioner and watching the HP 85370A display. When the DIRECTION switch is changed the display should begin counting in the opposite direction.

ManualsPlus.com

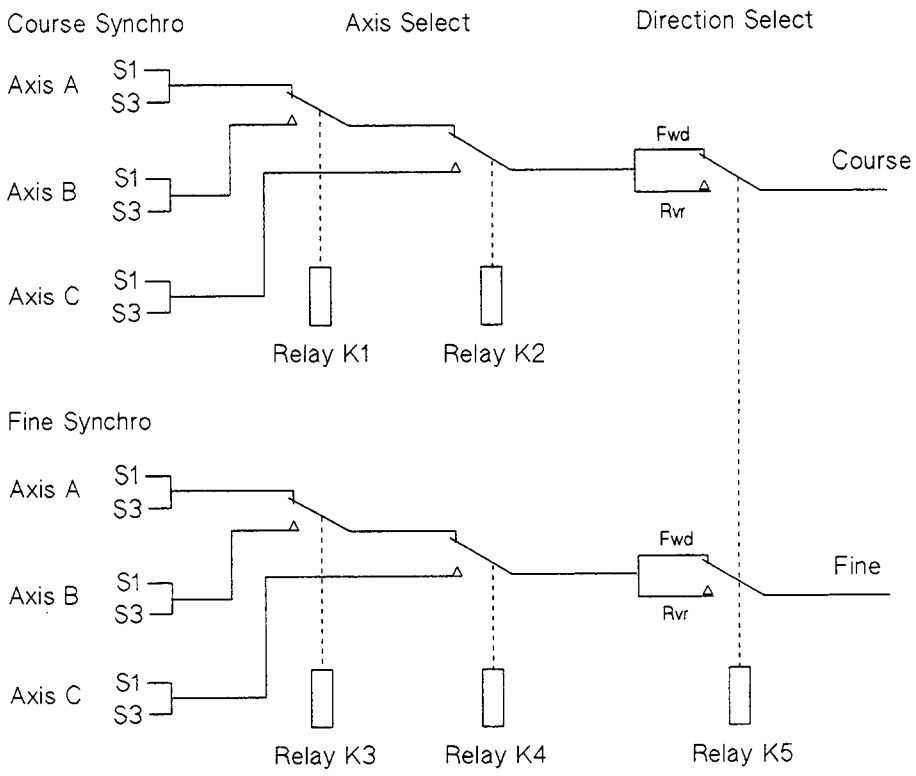

Figure 6-5. Axis Select and Direction Switch Relays

ManualsPlus.com

Synchro to Digital Converters. To check the synchro to digital converters, perform the following:

1. Turn the active axis positioner angle to 0°. *Use the positioner's mechanical angle of 0 °, do not use the positioner controller's 0 °. The positioner's mechanical 0 ° is usually indicated on the positioner be a mark on the positioner turn-table and the positioner's frame.*
2. Turn the TEST switch, A1S1, to ON.
3. Turn the positioner active axis slowly in either a clockwise, or counter-clockwise direction. Watch the LEDs, A1DS1 through A1DS4, as the positioner turns. The LEDs should be counting up or down, depending on the direction the positioner is turning. The LEDs will count in a binary format, with the LSD (least significant digits) from the 36:1 converter, and the MSD (most significant digits) from the 1:1 converter.

   The A2 display should also be counting up or down.
4. If the LEDs are not counting correctly, there may be a problem with the synchro to digital converters, or the data bus.
5. Turn the TEST switch, A1S1, to OFF.

Data Bus. To check the data bus for correct operation, perform the following:

1. Check the I/O LED on the front panel to the HP 85370A. The I/O LED lights when the HP 8530A is communicating with the HP 85370A. It should be on whenever the HP 85370A is being used. This LED does not light very brightly. It may be necessary to shield the LED from the room light so it can be seen.
2. Turn the active axis positioner angle to 0 °. *Use the positioner's mechanical angle of 0 °, do not use the positioner controller's 0 °. The positioner's mechanical 0 ° is usually indicated on the positioner by a mark on the positioner turn-table and the positioner's frame.*
3. Turn the TEST switch, A1S1, to ON.
4. Turn the positioner active axis *slowly* in either a clockwise, or counter-clockwise direction. Watch the LEDs (A1DS1 through A1DS4) as the positioner turns. The LEDs should be counting up or down, depending on the direction the positioner is turning. The LEDs will count in a binary format. The A2 display should also be counting up or down.
5. If the LEDs are not counting correctly, there may be a problem with the "Data Bus", or the "Synchro to Digital Converters".
6. Turn the TEST switch, A1S1, to OFF.

ManualsPlus.com

HP 85370A A2 Display board

Power Supply. The power supply test points are contained on the A2 display board on the left hand side as viewed from the front. The power supply contains only measurement test points. Table 6-5 shows the power supply test points and also the power supplies that feed each test point.

Table 6-5. A2 Power Supply Voltages

Supply Voltage	Test Point	Voltage	Voltage Source
Ground	TP2		
+5	TP3	+5 ±0.1 Vdc	from 85370A A2U16
+15	TP1	+15 ±0.1 Vdc	from 85102R A27

Adder. To check the adder for correct operation, perform the following:

1. Turn the active axis positioner angle to 0°. *Use the positioner's mechanical angle of 0 °, do not use the positioner controller's 0 °. The positioner's mechanical 0 ° is usually indicated on the positioner by a mark on the positioner turn-table and the positioner's frame.*
2. Turn the HP 8530A CRT angle display ON by pressing:

   STIMULUS (MENU)
   `ENCODER FUNCTIONS`
   `MORE`
   `ANG DISPLAY ON/MOVE`

   until you can see the positioner angle.
3. Clear the offset in the HP 8530A by pressing:

   STIMULUS (MENU)
   `ENCODER FUNCTIONS`
   `CLEAR OFFSET`
4. Clear any boresight offset in the postioner controller, if possible.
5. The HP 8530A CRT display should be showing approximately 0.0°. The HP 85370A LED display should be showing the same angle. If the angles vary by more than 0.1°, replace the HP 85370A A2 board.

ManualsPlus.com

6. Add an offset of 10° to the HP 85370A by pressing:

   STIMULUS (MENU)
   ENCODER FUNCTIONS
   ENCODER OFFSET (10) (X1)
   SAVE OFFSET

   Both the HP 8530A CRT display, and the HP 85370A display should now be offset by 10°. If the HP 85370A's display is not offset, replace the A2 board.

Translator. To verify the translator is working correctly, perform the following:

1. Slowly rotate the positioner's active axis while displaying this axis on the HP 85370A.
2. Watch the front panel display on the HP 85370A to see if any numbers are skipped, or missed. The positioner may have to rotate very slowing to accurately display the numbers to the right of the decimal point. The numbers in the 1/100 place (two places to the right of the decimal point) will skip numbers. This is normal because of the minimum resolution of the converters.

   If a number is consistantly skipped, the translator may be bad.

Another test for the translator is as follows:

1. Stop the positioner.
2. Clear the offset in the HP 8530A by pressing:

   STIMULUS (MENU)
   ENCODER FUNCTIONS
   CLEAR OFFSET

3. Note the angle displayed on the screen.
4. Enter an offset angle and press:

   SAVE OFFSET

5. Did the angle display change to the orginal angle plus the offset? If not, the translator or the HP 8530A option 005 (HP 85102R A27) board may be bad.

LED Display. Slowly rotate the positioner on the HP 85370A's select axis. The HP 85370A display should count up or down. Watch all of the display LED segments. If any LED segments are missing, or any numbers are missed (other than the 0.01 numbers in dual synchro mode), then replace the A2 board.

ManualsPlus.com

HP 8530A option 005 Interface board, HP 85102R A27

The following HP 8530A error message is related to the HP 85370A Position Encoder failures:

OPTION #005 NOT INSTALLED

The position encoder functions cannot be used unless the HP 8530A is equipped with option 005. This message is displayed if the HP 8530A does not have option 005 installed.

The HP 8530A option 005 interface board has failed.

Decoupling. The power supply decoupling network provides filtering and decoupling between the HP 85102R power supply and the power supplies in the HP 85370A.

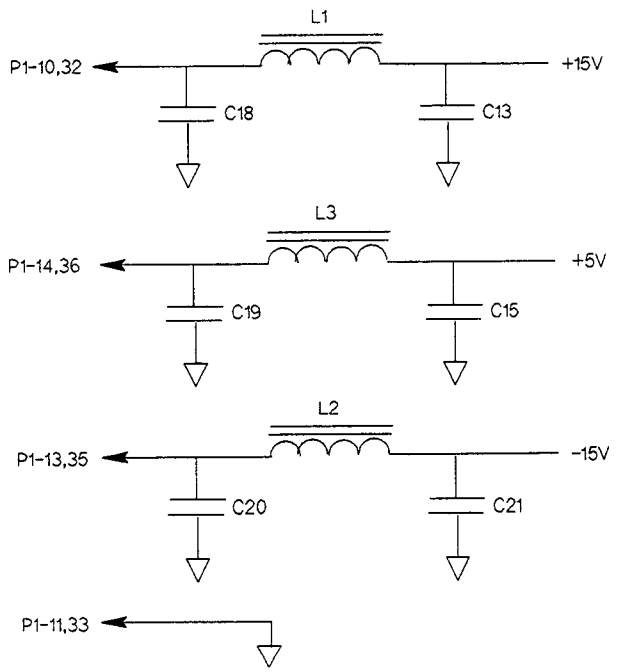

Figure 6-6. A27 Decoupling

ManualsPlus.com

Angle Comparator. To verify the angle comparator is operating correctly, perform the following:

1. Select a increment angle of 1.0°, by pressing:

   STIMULUS (MENU)
   INCREMENT ANGLE (1) (X1)

2. Set the (START) and (STOP) angles to a convenient angles.
3. Slowly rotate the positioner through the START and STOP angles.
4. Does the display update the measurement every 1.0°? If not, the option 005 (HP 85102R A27) board may be bad. Make sure the I/O bus is working correctly.

I/O. Perform the HP 85370A Data Bus tests and the Axis Select and Direction Switch Relay tests. If these tests pass, the option 005 I/0 is working correctly. If both tests do not pass, then the option 005 (HP 85102R A27) board may be bad.

ManualsPlus.com

Replaceable Parts

This section contains information for ordering replaceable parts for the HP 85370A Position Encoder. The replaceable parts include major assemblies and chassis hardware.

Parts List Description

Table 6-6 shows the location and identification of replaceable parts. The list provides the following information:

1. Reference designator: identifies the part in the accompanying figure.
2. Hewlett-Packard part number.
3. Part quantity as shown in the corresponding figure. (There may or may not be more of the same part elsewhere in the instrument.)
4. Part description, and identifying or functional name.

Ordering Information

To order a part, quote the Hewlett-Packard part number, indicate the quantity required, and address the order to the nearest Hewlett-Packard office.

To order a part that is not listed in the replaceable parts lists, include the instrument model number, complete serial number, the description and function of the part, and the number of parts required. Address the order to the nearest Hewlett-Packard office.

How to Order Parts Fast!

The fast ordering system only applies in the United States. Outside the United States, contact your nearest HP office.

When you know which parts you need, contact Hewlett-Packard's direct ordering team by calling this toll-free number:

800-227-8164 (Monday through Friday, 6 am to 5 pm PST)

The parts specialists have direct access to the replacement parts listed in this manual. There is a charge for hotline one day delivery, but four day delivery is standard. After hours and holidays, call 415-968-2347.

ManualsPlus.com

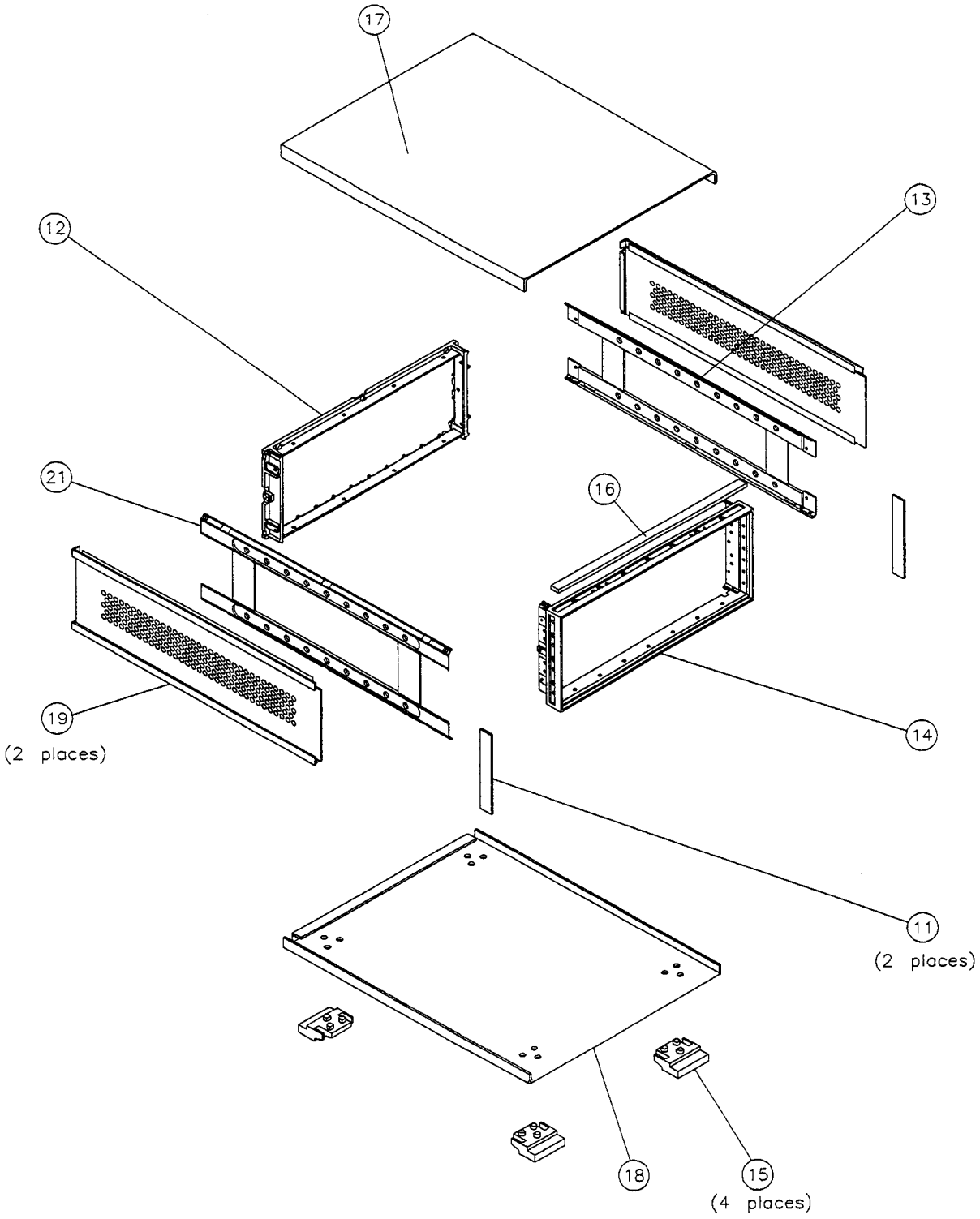

Figure 6-7. HP 85370A Chassis Diagram

ManualsPlus.com

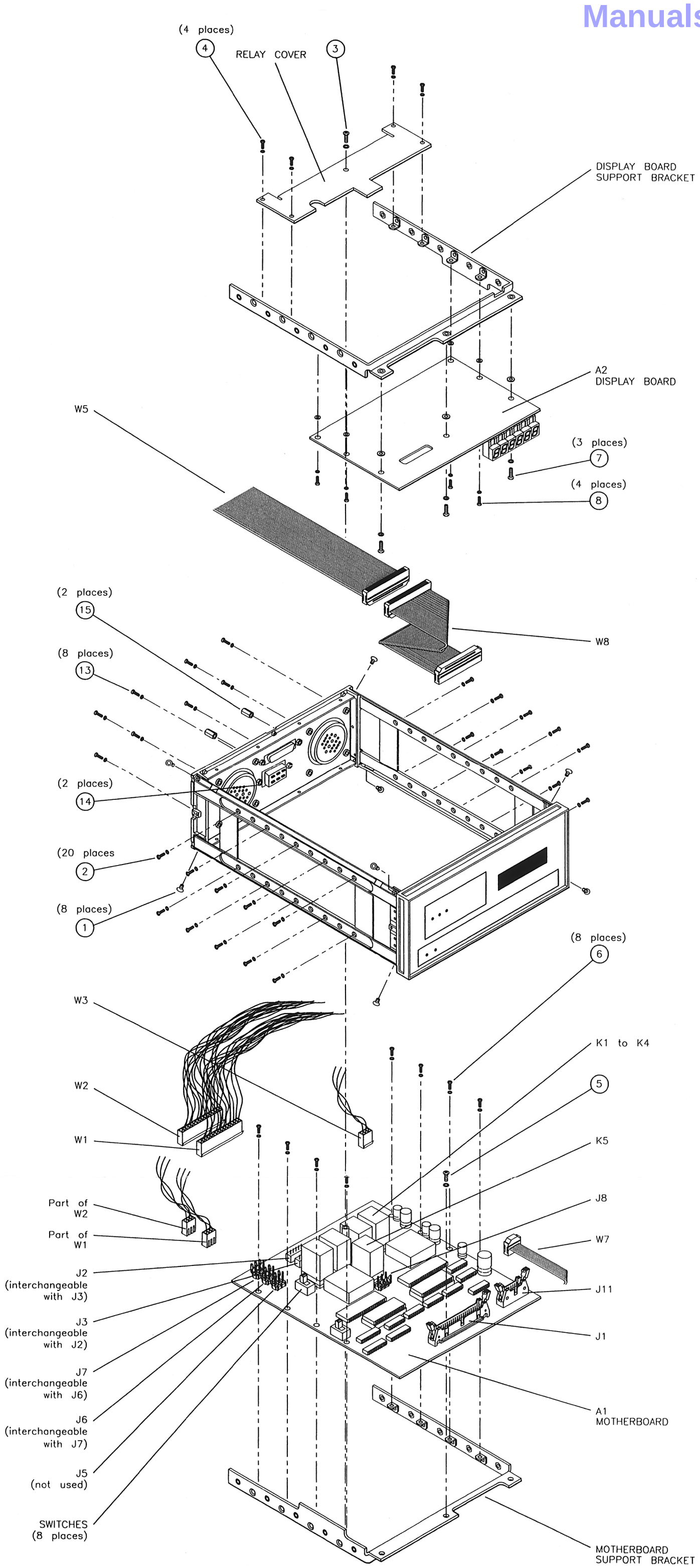

ManualsPlus.com

ManualsPlus.com

Table 6-6. HP 85370A Replacement Parts

Reference Designator	Description	Part Number	Qty
A1	MOTHERBOARD (NEW)	85370-60007	1
	MOTHERBOARD (EXCHANGE)	85370-69007	
A2	BOARD ASSY DISPLAY (NEW)	85370-60012	1
	BOARD ASSY DISPLAY (EXCHANGE)	85370-69012	
DS1 TO 6	DISPLAY LED SEGMENT	1990-1600	6
K1 TO 4	RELAY, 2 CONTACT 12 VDC	0490-0766	4
K5	RELAY, 4 CONTACT 12 VDC	0490-0767	1
1	RETAINER, FRONT PANEL	0510-1148	4
2	NOT USED		
3	SCREW SMM 3.5 10 PN TX	0515-0377	8
4	SCREW SMM 3.5 8 PN TX	0515-0458	4
5	SCREW SMM 3.5 6 FLPTX	0515-1382	4
6	SCREW SMM 4.0 7 FLPTX	0515-2086	8
7	NUT-HXSEM M3.0	0535-0031	4
8	CONNECTOR HARDWARE[1]	1251-2942	2
9	FRONT PANEL	85370-00001	1
10	SUB PANEL	85370-00003	1
11	TRIM-SIDE 88.1H	5001-0538	2
12	FRAME-REAR	5021-5814	1
13	FRAME-SIDE	5021-5829	2
14	FRAME-FRONT	5021-8413	1
15	FOOT	5041-8801	4
16	TRIM STRIP	5041-8803	1
17	TOP COVER	5062-3728	1
18	BOTTOM COVER	5062-3740	1
19	SIDE COVER	5062-3804	2
20	RELAY COVER	85370-00004	1
21	SCREW 6/32 x .250 IN	2360-0113	20
22	SCREW 4/40 x .250 IN	2200-0103	15
23	HOLE PLUG 6.25 IN	6960-0010	1
24	SUPPORT BRACKET	11713-00014	2
25	REAR PANEL	85370-00002	1
W1	CABLE ASSY SYNCHRO IN	85370-60001	1
W2	CABLE ASSY SYNCHRO OUT	85370-60002	1
W3	CABLE ASSY DIRECTION SWITCH	85370-60003	1

1 Includes stand-off, washer, lock washer, and hex nut.

ManualsPlus.com

Table 6-6. HP 85370A Replacement Parts (continued)

Reference Designator	Description	Part Number	Qty
W4	NOT USED		
W5	CABLE ASSY RIBBON	85370-60005	1
W6	EXTERNAL CABLE, ENCODER INTERCON (1.9m)	85370-60006	1
W7	CABLE ASSY FRONT PANEL LEDS	85370-60010	1
W8	CABLE ASSY DISPLAY RIBBON	85370-60013	1
	INSTALLATION/SERVICE MANUAL	85370-90001	1
	Option 001—Specific Parts		
	22-pin (f) to three-head 8-pin (m) Cable (3m)	85370-60015	1
	22-pin (m) to three-head 8-pin (f) Cable (1m)	85370-60016	1
	Cable if Synchro Display is not used (1.8m)	85370-60017	
	Option 002—Specific Parts		
	Position Control Unit to SYNCHRO OUT Cable (3m)	85370-60008	1
	Option 908 - Rack Mounting Kit		
	Rack Mounting Adapter Kit	5062-3972	1

ManualsPlus.com

SYNCHRO Connector Pins

Rear Panel

The pinouts for the SYNCHRO IN and SYNCHRO OUT connectors on the rear panel of the HP 85370A are shown below. Most antenna positioning systems use this standard pinout.

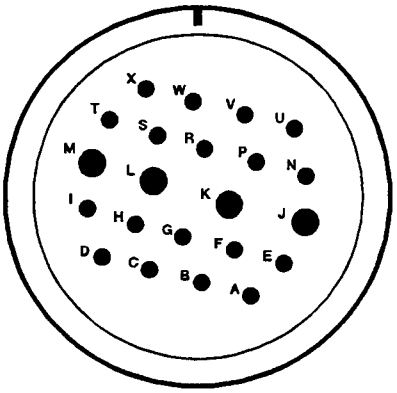

Figure 6-9. Standard SYNCHRO connector pinout

Table 6-7.
Connector Pins for Rear Panel SYNCHRO Connectors

Pin	Signal
A	Axis A - Fine - S3FA
B	Axis A - Fine - S1FA
C	Axis A - Coarse - S1CA
D	Axis A - Coarse - S3CA
E	Axis C - Fine - S3FC
F	Axis C - Fine - S1FC
G	
H	Axis C - Coarse - S1CC
I	Axis C - Coarse - S3CC
J	Reference High - RH - R1
K	Reference Common - RL - R2
L	Axis A, B, C - Common - S2
M	
N	
P	
R	
S	Case/Chassis Ground
T	
U	Axis B - Fine - S3FB
V	Axis B - Fine - S1FB
W	Axis B - Coarse - S1CB
X	Axis B - Coarse - S3CB

ManualsPlus.com

Option 001

The pinouts for the option 001 cable connectors are shown below. Most Scientific Atlantic antenna positioning systems use this pinout.

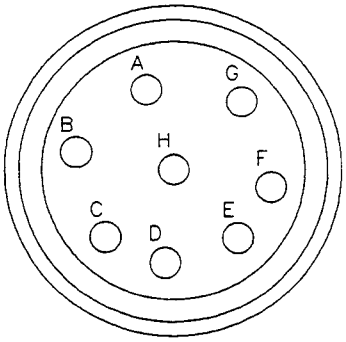

Figure 6-10.
Axis A/B/C SYNCHRO Cable Connector Pinout for Option 001

Table 6-8.
Connector Pins for Option 001 Cable Connectors

Pin	Signal
A	Reference High - RH - R1
B	
C	Reference Common - RL - R2
D	Coarse - S1C
E	Coarse - S3C
F	Fine - S3F
G	Fine - S1F
H	Common - S2

ManualsPlus.com

Option 002 The pinouts for the option 002 cable connectors are shown below. Most antenna positioning systems use this standard pinout.

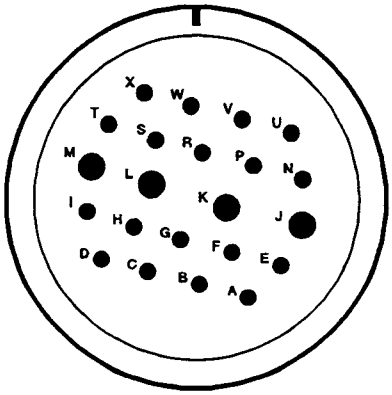

Figure 6-11.
SYNCHRO Connector Cable Pinout for Option 002

Table 6-9.
Connector Pins for Option 002 Cable Connectors

Pin	Signal
A	Axis A - Fine - S3FA
B	Axis A - Fine - S1FA
C	Axis A - Coarse - S1CA
D	Axis A - Coarse - S3CA
E	Axis C - Fine - S3FC
F	Axis C - Fine - S1FC
G	
H	Axis C - Coarse - S1CC
I	Axis C - Coarse - S3CC
J	Reference High - RH - R1
K	Reference Common - RL - R2
L	Axis A, B, C - Common - S2
M	
N	
P	
R	
S	Case/Chassis Ground
T	
U	Axis B - Fine - S3FB
V	Axis B - Fine - S1FB
W	Axis B - Coarse - S1CB
X	Axis B - Coarse - S3CB

ManualsPlus.com

Assembly Replacement Procedures and Adjustments

Introduction

This chapter contains procedures for removing and replacing the following assemblies:

- Motherboard Assembly (A1)
- Relays (K1 through K5)
- Display Board Assembly (A2)
- Display Ribbon Cable Assembly (W8)
- Front Panel
- Front Panel LED Cable Assembly (W7)
- Rear Panel Cable Assemblies
  - Synchro In Cable Assembly (W1)
  - Synchro Out Cable Assembly (W2)
  - Direction Switch Cable Assembly (W3)
  - Ribbon Cable Assembly (W5)
- Adjustments

Table 6-10. Disassembly Tools Needed

Tool	HP Part Number
Large Pozidrive	8710-0900
Small Pozidrive	8710-0899
T-10 TORX driver	8710-1623
T-15 TORX driver	8710-1622
Small flat blade screwdriver	8730-0008
Needlenose pliers	8710-0595
7/32 inch wrench	8710-0980
3/16 inch wrenches (Qty 2)	8720-0013

ATTENTION! Static Sensitive!
Handle only at Static Safe Work Stations

This product contains static-sensitive components. When handling assemblies, work on an anti-static surface and use a static grounding wrist strap.

ManualsPlus.com

A1 Motherboard Assembly

Tools Required

Large Pozidrive screwdriver
Small Pozidrive screwdriver
T-15 TORX driver
Small flat blade screwdriver

Procedure

The items shown in parentheses refer to the corresponding items, shown in Figure 6-8.

To Disassemble.

1. Disconnect all cables from the rear panel. Remove the top, bottom, and side covers.
2. Remove the four screws (item 1) from the corners of each side frame. Remove the ten screws (item 2) from the sides of each side frame.
3. Remove the center screw and washer (item 3) and the four outer screws and washer (item 4) from the relay cover. Remove the relay cover.
4. Remove all cables from the motherboard. Use a small flat blade screwdriver to carefully lift the cables from connectors J2 and J3.
5. To detach the support bracket from the motherboard, remove the one screw and washer (item 5) from the crossbeam and the eight screws and washers (item 6) from the sides.

To Reassemble.

1. Insure the switches (S1 through S8) on the replacement motherboard assembly are in the same position as the board you just removed.
2. To install the motherboard, reverse the preceding steps.

Note

The cables that plug into connectors A1J2 and A1J3 are interchangeable. The cables that plug into connectors A1J6 and A1J7 are also interchangeable. Make sure the ribbon cable, W5 is placed over the top of the relay cover.

ManualsPlus.com

Relays (K1 through K5)

Tools Required

Large Pozidrive screwdriver
Small Pozidrive screwdriver
T-15 TORX driver

Procedure

The items shown in parentheses refer to the corresponding items, shown in Figure 6-8.

To Disassemble.

1. Disconnect all cables from the rear panel. Remove the top and side covers.
2. Remove the center screw and washer (item 3) and the four outer screws and washer (item 4) from the relay cover. Remove the relay cover.
3. With your thumb and index finger, use a rocking motion to lift the bad relay (see K1 through K5) out of its socket.

To Reassemble.

1. To install a relay, reverse the preceding steps. Align the replacement relay with the relay socket. Gently press down on the relay until it is fully seated in its socket.

ManualsPlus.com

A2 Display Board Assembly

Tools Required

Large Pozidrive screwdriver
Small Pozidrive screwdriver
T-15 TORX driver

Procedure

The items shown in parentheses refer to the corresponding items, shown in Figure 6-8.

To Disassemble.

1. Disconnect all cables from the rear panel. Remove the top, bottom, and side covers.
2. Remove the four screws (item 1) from the corners of each side frame. Remove the ten screws (item 2) from the sides of each side frame.
3. Remove the center screw and washer (item 3) and the four outer screws and washer (item 4) from the relay cover.
4. Reach underneath and disconnect the two ribbon cables (W5 and W8) from the component side of the display board.
5. To detach the support bracket from the display board, remove the three screws and washers (item 7) from the crossbeam and the four screws and washers (item 8) from the sides.

To Reassemble.

1. To install a display board, reverse the preceding steps.

ManualsPlus.com

W8 Display Ribbon Cable Assembly

Tools Required

Large Pozidrive screwdriver
Small Pozidrive screwdriver
T-15 TORX driver

Procedure

The items shown in parentheses refer to the corresponding items, shown in Figure 6-8.

To Disassemble.

1. Disconnect all cables from the rear panel. Remove the top, bottom, and side covers.
2. Remove the four screws (item 1) from the corners of each side frame. Remove the ten screws (item 2) from the sides of each side frame.
3. Remove the center screw and washer (item 3) from the relay cover.
4. Remove W8 from J1 on the motherboard and J2 on the display board.

To Reassemble.

1. To install a display ribbon cable reverse the preceding steps.

ManualsPlus.com

Front Panel

Tools Required

Large Pozidrive screwdriver
Small Pozidrive screwdriver
Small flathead screwdriver
T-10 TORX driver
T-15 TORX driver
Needlenose pliers

Procedure

The items shown in parentheses refer to the corresponding items, shown in Figure 6-12.

To Disassemble.

1. Disconnect all cables from the rear panel. Remove the top and bottom covers.
2. Remove the top trim strip, (item 9) and the four screws (item 10) from the front frame. This will free the front panel and the sub-panel from the frame.
3. To remove the sub-panel from the front panel, use needlenose pliers to remove the four retainer clips (item 11) from the sub-panel.

To Reassemble.

1. To install a front dress panel assembly, reverse the preceding steps.

Note

Align the tips of the LEDs with the holes in the front panel when mating the new front panel with the existing sub panel.

The recessed portion of the top trim strip faces the *back* of the instrument.

ManualsPlus.com

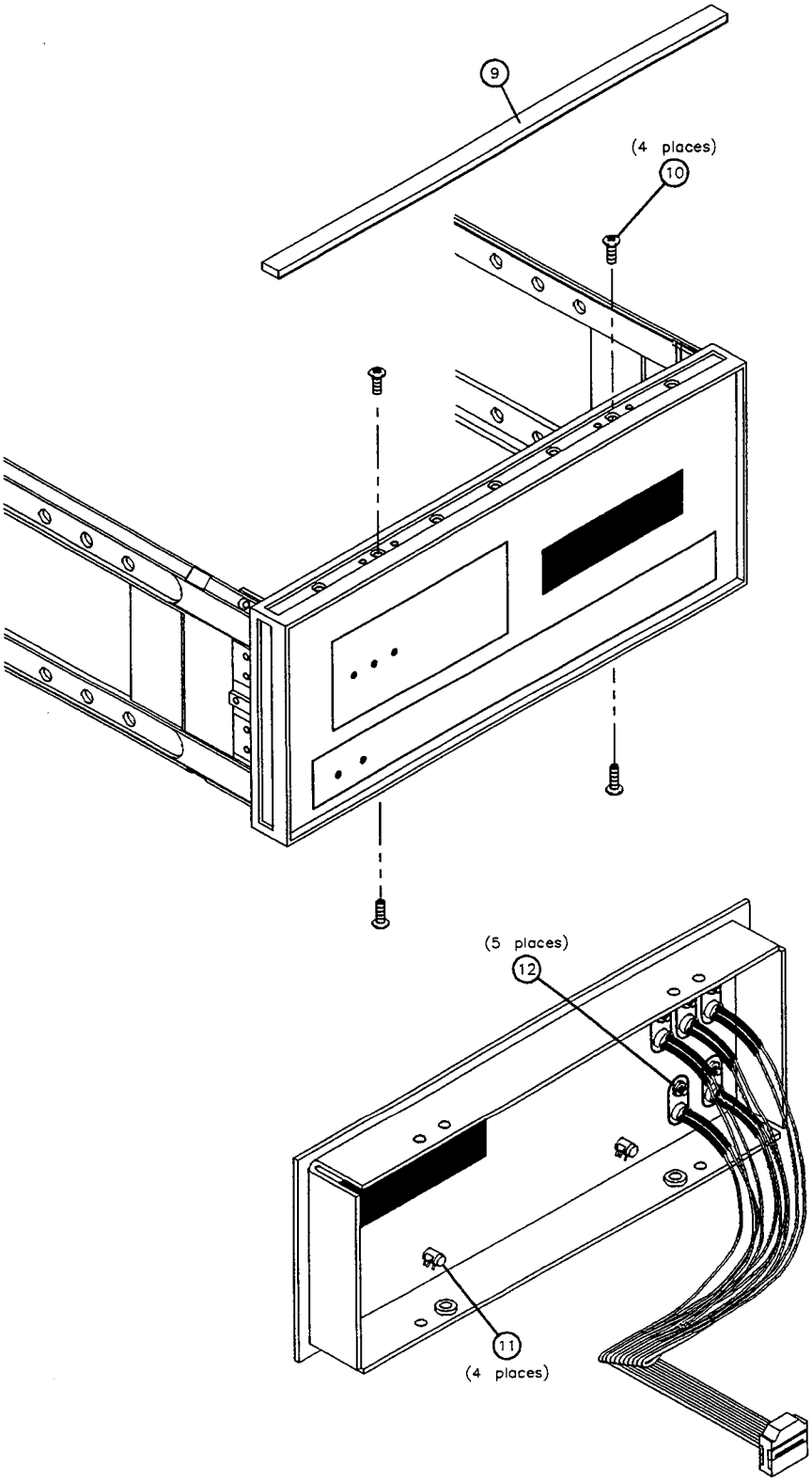

Figure 6-12. Front Dress Panel Replacement

ManualsPlus.com

W7 Front Panel LED Cable Assembly

Tools Required

Large Pozidrive screwdriver
Small Pozidrive screwdriver
T-15 TORX driver
Long nose pliers
7/32 inch wrench

Procedure

The items shown in parentheses refer to the corresponding items, shown in Figure 6-8.

To Disassemble.

1. Disconnect all cables from the rear panel. Remove the top, bottom and side covers.
2. Remove the four screws (item 1) from the corners of each side frame. Remove the ten screws (item 2) from the sides of each side frame.
3. Remove the center screw and washer (item 3) from the relay cover.
4. Disconnect the ribbon cable (item 7) on the motherboard.
5. Refer to Figure 6-12. Remove the top trim strip (item 9) and the four screws (item 10) from the front frame.
6. To remove the sub-panel from the front panel, use needlenose pliers to remove the four retainer clips (item 11) from the sub-panel.
7. Remove the five nuts and washers (item 12) securing the LEDs and remove the LED cable assembly from the sub-panel.

To Reassemble

1. To install a front panel LED cable assembly, reverse the preceding steps.

Note

Insure that the tips of the LEDs are aligned with the holes in the front panel when mating the front panel with the subpanel.

The recessed portion of the top trim strip faces to the back of the instrument.

ManualsPlus.com

Rear Panel Cable Assemblies

- Synchro In Cable Assembly
- Synchro Out Cable Assembly
- Direction Switch Cable Assembly
- Ribbon Cable Assembly

Tools Required

Large Pozidrive screwdriver
Small Pozidrive screwdriver
T-10 TORX driver
T-15 TORX driver
7/32 inch wrench
3/16 inch wrenches (Qty 2)

Procedure

The items shown in parentheses refer to the corresponding items shown in Figure 6-8.

To Disassemble.

1. Disconnect all cables from the rear panel. Remove the top, bottom, and side covers.
2. Remove the four screws (item 1) from the corners of each side frame. Remove the ten screws (item 2) from the sides of each side frame.
3. Remove the center screw and washer (item 3) from the relay cover.
4. Disconnect all of the cables that go to the rear panel. The rear panel is now free from the instrument.
5. To replace the synchro-in cable assembly or the synchro-out cable assembly, remove the four screws (item 13) from the appropriate synchro connector assembly.
6. To replace the directional switch cable assembly:

   Remove the two hex nuts (item 14, located on the inside of the rear panel) from the directional switch connector. Use the the 7/32-inch wrench.
7. To replace the ribbon cable assembly:

   Remove the two hex screws (item 15) using two 3/16-inch wrenches. Use one wrench to hold the nut on the inside of the rear panel while using the other wrench to loosen the screw on the outside of the rear panel.

ManualsPlus.com

To Reassemble.

1. To install a rear panel cable assembly, reverse the preceding steps.

Note

The cables that plug into connectors A1J2 and A1J3 are interchangeable. The cables that plug into connectors A1J6 and A1J7 are also interchangeable. Make sure the ribbon cable, W5 goes over the top of the relay cover. Refer to Figure 6-13 for correct positioning of the cable assemblies.

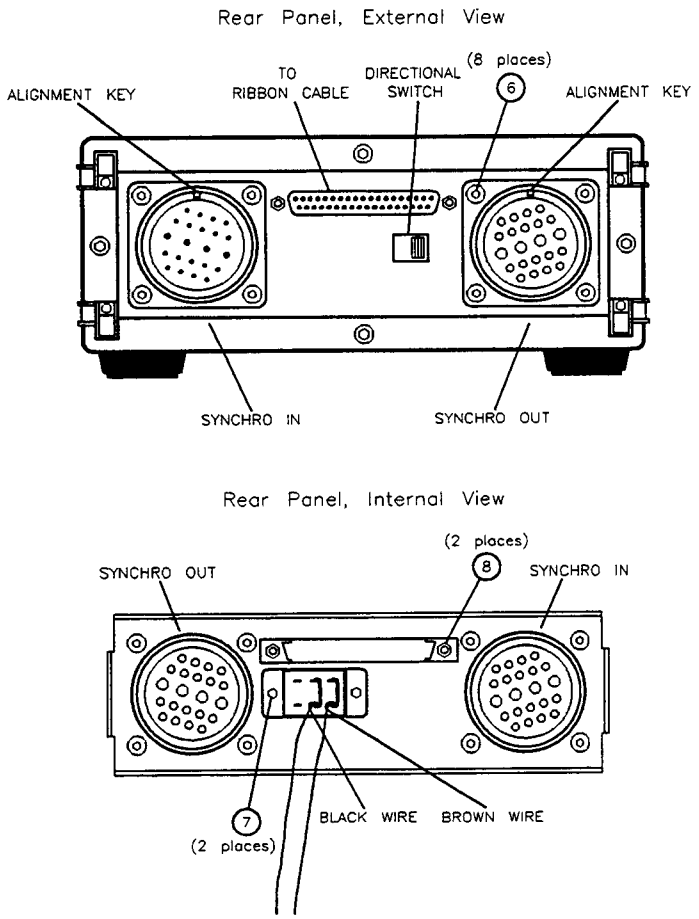

Figure 6-13. Rear Cable Assemblies

Adjustments

There are no field adjustments that can be made to the HP 85370A A1 board. The two adjustment pots, A1R38 and A1R40, adjust the zero angle offset on the synchro to digital converters. These are factory set. *Do not adjust.*

ManualsPlus.com

Performance Verification

Introduction

This performance verification should be done once a year, or as required. It verifies the HP 85370A and HP 8530A antenna position encoder system is working properly. This verification checks *only* the encoder system. It does *not* check the positioning system for proper operation. Please see the positioner manufacture's manual for positioner verification.

Verification Check

Perform the following steps to check the position encoder system's operation.

1. Turn ON the positioning system.
2. Turn ON the HP 8530.
3. Make sure the HP 8530 and the HP 85370A are installed and set-up properly. See the Installation chapter for more information.
4. Clear any encoder offset angles by pressing:

   STIMULUS (MENU) ENCODER FUNCTIONS CLEAR OFFSET.

5. Display the HP 85370 encoder angle on the HP 8530 display by pressing:

   STIMULUS (MENU) ENCODER FUNCTIONS MORE ANG DISPLY ON/MOVE.

6. Turn each of the positioner axis to 0°. If the positioner has only one axis, turn that axis. If the positioner has three axis, then turn each to 0°. *Use the positioner's mechanical angle of 0 °, do not use the positioner controller's 0 °. The positioner's mechanical 0 ° is usually indicated on the positioner by a mark on the positioner turn-table and the positioner's frame.*

   If there is no mark on the positioner to show 0°, then judge where 0° is and adjust the accuracy of the following steps accordingly.

ManualsPlus.com

7. Select each of positioner's axis on the HP 8530 by pressing:

   STIMULUS (MENU) ENCODER FUNCTIONS AXIS A AXIS B AXIS C.

   Each axis on the HP 85370 and HP 8530 display should read approximately 0.0° ±5.0°. If each display is correct then the HP 85370 is working correctly, and it passes the performance verification test.

   If the HP 85370 and the HP 8530 displays vary more than ±0.1°, then the encoder system requires servicing.

   If any of the encoder angles varies more than ±5.0° from 0.0°, then either the positioner is not exactly at a mechanical 0.0°, or the synchros in the positioner require adjustment. Please see the positioner manufacturer's manual to check on any adjustments.

ManualsPlus.com

ManualsPlus.com

A

Legal Notices

Certification

Hewlett-Packard Company certifies that this product met its published specifications at the time of shipment from the factory. Hewlett-Packard further certifies that its calibration measurements are traceable to the United States National Institute of Standards and Technology, (NIST, formerly NBS), to the extent allowed by the Institute's calibration facility, and to the calibration facilities of other International Standards Organization members.

Warranty

This Hewlett-Packard system product is warranted against defects in material and workmanship for a period corresponding to the individual warranty periods of its component products. Computer and computer peripherals are warranted for a period of 90 days. Instruments are warranted for a period of one year. During the warranty period, Hewlett-Packard Company will, at its option, either repair or replace products which prove to be defective.

Warranty service for products installed by HP and certain other products designated by HP will be performed at Buyer's facility at no charge within HP service travel areas. Outside HP service travel areas, warranty service will be performed at Buyer's facility only upon HP's prior agreement and Buyer shall pay HP's round trip travel expenses. In all other areas, products must be returned to a service facility designated by HP.

For products returned to HP for warranty service, Buyer shall prepay shipping charges to HP and HP shall pay shipping charges to return the product to Buyer. However, Buyer shall pay all shipping charges, duties, and taxes for products returned to HP from another country.

HP warrants that its software and firmware designated by HP for use with an instrument will execute its programming instructions when properly installed on that instrument. HP does not warrant that the operation of the instrument, or software, or firmware will be uninterrupted or error free.

ManualsPlus.com

Limitation of Warranty

The foregoing warranty shall not apply to defects resulting from improper or inadequate maintenance by Buyer, Buyer-supplied software or interfacing, unauthorized modification or misuse, operation outside of the environmental specifications for the product, or improper site preparation or maintenance.

NO OTHER WARRANTY IS EXPRESSED OR IMPLIED. HP SPECIFICALLY DISCLAIMS THE IMPLIED WARRANTIES OF MERCHANTABILITY AND FITNESS FOR A PARTICULAR PURPOSE.

Exclusive Remedies

THE REMEDIES PROVIDED HEREIN ARE BUYER'S SOLE AND EXCLUSIVE REMEDIES. HP SHALL NOT BE LIABLE FOR ANY DIRECT, INDIRECT, SPECIAL, INCIDENTAL, OR CONSEQUENTIAL DAMAGES, WHETHER BASED ON CONTRACT, TORT, OR ANY OTHER LEGAL THEORY.

Assistance

Product maintenance agreements and other customer assistance agreements are available for Hewlett-Packard products.

For any assistance, contact your nearest Hewlett-Packard Sales and Service Office.

ManualsPlus.com

Manufacturer's Declaration

Note

This is to certify that this product meets the radio frequency interference requirements of Directive FTZ 1046/1984. The German Bundespost has been notified that this equipment was put into circulation and has been granted the right to check the product type for compliance with these requirements.

If test and measurement equipment is operated with unshielded cables and/or used for measurements on open set-ups, the user must insure that under these operating conditions, the radio frequency interference limits are met at the border of his premises.

Model HP 85370A

Note

Hiermit wird bescheinigt, dass dieses Gerät/System in Übereinstimmung mit den Bestimmungen von Postverfügung 1046/84 funkentstört ist.

Der Deutschen Bundespost wurde das Inverkehrbringen dieses Gerätes/Systems angezeight und die Berechtigung zur Überprüfung der Serie auf Einhaltung der Bestimmungen eingeräumt.

Zustzinformation für Mess-und Testgeräte:

Werden Mess- und Testgeräte mit ungeschirmten Kabeln und/oder in offenen Messaufbauten verwendet, so ist vom Betreiber sicherzustellen, dass die Funk-Entstörbestimmungen unter Betriebsbedingungen an seiner Grundstücksgrenze eingehalten werden.

Model HP 85370A

Sound Emissions

This is to declare that this product is in conformance with the German Regulation on Noise Declaration for Machines (Laermangabe nach der maschinenlaermrerordnung -3. GSGV Deutschland).

Acoustic Noise Emission/Geraeuschemission	
LpA < 70 dB	LpA < 70 dB
Operator Position	am Arbeitsplatz
Normal Position	normaler Betrieb
per ISO 7779	nach DIN 45635 t. 19

ManualsPlus.com

ManualsPlus.com

DECLARATION OF CONFORMITY

according to ISO/IEC Guide 22 and EN 45014

Manufacturer's Name: Hewlett-Packard Co.

Manufacturer's Address: Santa Rosa Systems Division
1400 Fountaingrove Parkway
Santa Rosa, CA 95403-1799
USA

declares that the product

Product Name: Syncro Encoder

Model Number: HP 85370A

Product Options: This declaration covers all options of the above product.

conforms to the following Product specifications:

Safety: IEC 348:1978/HD 401 S1:1981
CAN/CSA-C22.2 No. 231 (Series M-89)

EMC: CISPR 11:1990/EN 55011:1991 Group 1, Class A
IEC 801-2:1984/EN 50082-1:1992 4 kV CD, 8 kV AD
IEC 801-3:1984/EN 50082-1:1992 3 V/m, 27-500 MHz
IEC 801-4:1988/EN 50082-1:1992 0.5 kV Sig. Lines, 1 kV Power Lines

Supplementary Information:

The product herewith complies with the requirements of the Low Voltage Directive 73/23/EEC and the EMC Directive 89/336/EEC and carries the CE-marking accordingly.

Product safety qualification testing for this product was performed prior to 1 December 1993.

Santa Rosa, California, USA 12 Feb. 1998

John Hiatt/Quality Engineering Manager

European Contact: Your local Hewlett-Packard Sales and Service Office or Hewlett-Packard GmbH, Department HQ-TRE, Herrenberger Strasse 130, D-71034 Böblingen, Germany (FAX +49-7031-14-3143)

ManualsPlus.com

ManualsPlus.com

Index

0

0 to 360 degree display mode, selecting, 3-2

1

+/-180 softkey, 4-6
+/-180 softkey (position encoder function), 3-2

6

60 dB PATTERN, 4-2

A

ABORTED ENCODER TRIGGERED SWEEP, error message, 5-2
accuracy specifications, 1-3
adjustments, 6-37
ANG DISPLY ON/MOVE and OFF softkeys (position encoder function), 3-2
ANG DISPLY ON/MOVE softkey, 3-2, 4-4
ANGDOFF, 4-3
ANGDON, 4-4
angle display
  description, vi
angle display (HP 85370A), 3-2
angle display mode (position encoder) functions, 3-2
angle display ON and OFF (position encoder function), 3-2
ANGP180, 4-6
ANGP360, 4-5
ANG POL 0-360 softkey (position encoder function), 3-2
ANG POL 0 TO 360 softkey, 4-5
antenna coordinate system, 2-12
assistance, A-2
AXISA, 4-7
AXIS A softkey, 4-7
AXIS A softkey (position encoder function), 3-3
AXISB, 4-8
AXIS B softkey, 4-8
AXIS B softkey (position encoder function), 3-3
AXISC, 4-9
AXIS C softkey, 4-9
AXIS C softkey (position encoder function), 3-3

ManualsPlus.com

B

BEAM WIDTH NOT VALID IN THIS FORMAT, error message, 5-2
BOREANG, 4-11
BORESIGHT ANGLE, 3-3
BORESIGHT ANGLE softkey, 4-11

C

calibration, 6-38
caution/tell messages, 4-21
certification, A-1
characteristics, supplemental, 1-3
CLEAR OFFSET softkey, 4-12
CLEAR OFFSET softkey (position encoder function), 3-4
CLEAROFS, 4-12
coarse
  and fine synchro (position encoder) functions, 3-2
  (single, 1:1) synchro mode (position encoder function), 3-2
? commands, 4-20
commands
  query, 4-20
connector pins
  option 001, 6-26
  option 002, 6-27
  rear panel, 6-25
coordinate system, 2-9
  antenna, 2-12
  positioner, 2-10
current axis, selecting (for synchro encoder operation), 3-3

D

data acquisition speed specifications, 1-3
DIRECTION switch, 1-5
display, front panel description, vi
dual
  (dual, 36:1) synchro mode (position encoder function), 3-2
  synchro mode (position encoder function), 3-2
DUAL softkey, 4-18
DUAL (synchro) softkey (position encoder function), 3-2

E

electrical specifications, 1-2
ENCANGC, 4-13
encoder
  position (HP 85370A) operation, 3-1
ENCODER
  INTERCONNECT connector, 1-4
ENCODER ANGLE softkey, 4-13
ENCODER NOT FOUND error message, 5-2
ENCODER OFFSET ANGLE ALREADY SAVED error message, 5-2
error messages, 5-2
  ABORTED ENCODER TRIGGERED SWEEP, 5-2
  BEAM WIDTH NOT VALID IN THIS FORMAT, 5-2
  ENCODER NOT FOUND, 5-2
  ENCODER OFFSET ANGLE ALREADY SAVED, 5-2
  OPTION #005 NOT INSTALLED, 5-2
  OVERSPEED ERROR—BACKUP, 5-2
  TRIGGER TOO FAST, 5-2

ManualsPlus.com

F
features of the position encoder, vi
front panel description, vi

H
HP 85370A position encoder operation, 3-1

I
in case of difficulty, 5-1
installing a new receiver firmware revison, 2-1
instrument failures, general, 6-7

L
legal notices, A-1
limitation of warranty, A-2

M
manual
  conventions, v
  organization, v
manufacturer's declaration, A-3
measurement speed specifications, 1-3
messages
  caution/tell, 4-21

O
offset
  clear (position encoder function), 3-4
  save (position encoder function), 3-4
OFF softkey, 4-3
OPTION #005 NOT INSTALLED, error message, 5-2
ordering information, parts, 6-19
`OUTPENCAO`, 4-16
`OUTPENCAR`, 4-15
OUTPUT ENCODER softkey, 4-15
output offset angle, 4-16
OVERSPEED ERROR—BACKUP, error message, 5-2

P
parts
  ordering information, 6-19
  replaceable, 6-19
`PATT60`, 4-2
performance verification, 6-38
pinouts
  option 001, 6-26
  option 002, 6-27
  rear panel, 6-25
plus/minus 180 degree display mode, selecting, 3-2
position encoder
  operation, 3-1
position encoder angle display, moving, 3-2
position encoder angle display, turning OFF, 3-2
position encoder angle display, turning ON, 3-2
positioner controller
  coordinate system, antenna setting, 2-12
positioner coordinate system, 2-10
positioner coordinate system, positioner setting, 2-10
power supply

ManualsPlus.com

test points, 6-9
voltages, 6-9
product
description, vi
features, vi

Q

query commands, 4-20
question commands, 4-20

R

rear panel description, 1-3
recommended test equipment, 6-6
replacement
procedures, 6-28
replacement parts, 6-19
ordering information, 6-19
resolution specifications, 1-2

S

SAVE OFFSET softkey, 4-17
SAVE OFFSET softkey (position encoder function), 3-4
SAVEOFS, 4-17
single and dual synchro (position encoder) functions, 3-2
specifications, 1-2
accuracy, 1-3
data acquisition speed, 1-3
electrical, 1-2
resolution, 1-2
supplemental characteristics, 1-3
SYNCHDUAL, 4-18
synchro
encoder operation, 3-1
SYNCHRO
connector pins:option 001, 6-26
connector pins:option 002, 6-27
connector pins:rear panel, 6-25
IN connector, description and ratings, 1-4
OUT connector, description and ratings, 1-5
SINGLE mode (position encoder function), 3-2
SINGLE softkey (position encoder function), 3-2
SYNCHRO SINGLE softkey, 4-19
SYNCHSING, 4-19

T

test equipment, 6-6
theory of operation, system, 6-2
TRIGGER TOO FAST, error message, 5-2
troubleshooting operational problems, 5-1

ManualsPlus.com

U updating the receiver firmware, 2-1

V verification, 6-38

W warranty, A-1
limitation, A-2

ManualsPlus.com