ManualsPlus.com

Instrument Messages and Functional Tests

Agilent Technologies

PSA Series Spectrum Analyzers

and

ESA Series Spectrum Analyzers

Agilent Technologies

Manufacturing Part Number: E4440-90246
Supersedes: E4440-90228

Printed in USA

April 2004

© Copyright 2001-2004 Agilent Technologies, Inc.

ManualsPlus.com

Notice

The information contained in this document is subject to change without notice.

Agilent Technologies makes no warranty of any kind with regard to this material, including but not limited to, the implied warranties of merchantability and fitness for a particular purpose. Agilent Technologies shall not be liable for errors contained herein or for incidental or consequential damages in connection with the furnishing, performance, or use of this material.

Where to Find the Latest Information

Documentation is updated periodically. For the latest information about Agilent PSA or ESA spectrum analyzers, including firmware upgrades and application information, please visit the following Internet URLs:

http://www.agilent.com/find/esa

http://www.agilent.com/find/psa

ManualsPlus.com

1. Instrument Messages
Instrument Messages Introduction 30
Error Queues 31
Error Message Format 32
Error Message Types 33
Instrument Messages 34
Error Messages 34
Instrument Messages Without Numbers 81

2. Functional Tests
What You Will Find in This Chapter 96
What Are the Functional Tests? 96
Functional Test Versus Performance Verification 96
This chapter includes the following: 96
Before Performing a Functional Test 97
Test Equipment 98

3. PSA Functional Tests
Amplitude Accuracy at 50 MHz 102
Test Limits 102
Test Description 102
Procedure 103
Testing Option 1DS (Preamp) 106
Displayed Average Noise Level (DANL) 107
Test Limits (with 0 dB input attenuation) 107
Test Description 107
Procedure 107
Frequency Readout Accuracy 109
Test Limits 109
Test Description 109
Procedure 110
Frequency Response (Flatness) 111
Test Limits 111
Test Description 111
Procedure 112
Amplitude Linearity 115
Test Limits 115
Test Description 115
Procedure 116
Second Harmonic Distortion (SHD) 118
Test Limits 118
Test Description 118
Procedure 119

4. ESA Functional Tests
Displayed Average Noise Level 122
Test Limits 122
Test Description 123

Contents

ManualsPlus.com

Procedure (10 MHz to 500 MHz) E4401B and E4411B 124
Procedure (501 MHz to 1.0 GHz) E4401B and E4411B 125
Procedure (1.01 GHz to 1.5 GHz) E4401B and E4411B 126
Procedure (10 MHz to 1 GHz) E4402B, E4403B, E4404B, E4405B, E4407B, and E4408B . . 127
Procedure (1.01 GHz to 2 GHz) E4402B, E4403B, E4404B, E4405B, E4407B, and E4408B . 128
Procedure (2.01 GHz to 3.0 GHz) E4402B, E4403B, E4404B, E4405B, E4407B, and E4408B 129
Procedure (3.01 GHz to 6.0 GHz) E4404B, E4405B, E4407B, and E4408B 131
Procedure (6.01 GHz to 6.7 GHz) E4404B 132
Procedure (6.01 GHz to 12.0 GHz) E4405B, E4407B, and E4408B 133
Procedure (12.01 GHz to 13.2 GHz) E4405B 134
Procedure (12.01 GHz to 22 GHz) E4407B and E4408B 135
Procedure (22.01 GHz to 26.5 GHz) E4407B and E4408B 136
Frequency Readout Accuracy 139
Test Limits 139
Test Description 139
Procedure 140
Marker Count Accuracy 141
Procedure 141
Frequency Response (Flatness) 142
Test Limits 142
Test Description 142
Procedure 143
Reference Level Accuracy 146
Test Limits 146
Test Description 146
Log Mode Procedure 147
Linear Mode Procedure 149
Resolution Bandwidth Switching Uncertainty 151
Test Limits 151
Test Description 151
Procedure 152
Scale Fidelity 154
Test Limits 154
Test Description 154
Procedure 155
Second Harmonic Spurious Responses 157
Test Limits 157
Test Description 157
Procedure 158
Tracking Generator Level Flatness: Models E4401B and E4411B, Options 1DN and 1DQ 160
Test Limits 160
Test Description 160
Procedure 161
Tracking Generator Level Flatness:
E4402B, E4403B, E4404B, E4405B, E4407B and E4408B, Option 1DN 163
Test Limits 163

ManualsPlus.com

Test Description 163
Procedure 164

Contents

ManualsPlus.com

ManualsPlus.com

(ADC Align Failure) 87
(FM Demod Align Failure) 88
(IF Align Failure) 89
(IF/ADC Over Range) 89
(LO Align Failure) status bit only, no message 89
(RF Align Failure) 91
(TG Align Failure) status bit only, no message 92
* (Invalid Data) 86
*CLS 31
*CLS 34
<directoryname> directory deleted 82
<directoryname> directory deleted 82
<filename> file copied 82
<filename> file deleted 82
<filename> file loaded 82
<filename> file saved 82
<filename> too many data entries 82
<name1> <directoryname1> directory renamed to <name2> 82
<name1> <filename1> file renamed to <name2> 83
'10101010' pattern not detected - results may be inaccurate. 64
100 spurs found. Additional spurs ignored 69
1st LO Unlock; Failure acquiring FracN LO frequency lock 41
1st LO Unlock; Failure acquiring single loop FracN LO lock. 41
2nd LO Unlock 41
3 – 26.5 GHz preselector bypassed, can't adjust 44
4th LO Unlock 41
50 MHz Osc Unlevel (50 MHz Osc Unleveled) 86
Acquiring Data.... 54
Actual Trig Delay = Remote Trig Delay + Remote Trig Offset 44
ADC overload -- Carrier not at expected frequency 73
Align Now All Needed (Align Needed). 87

ManualsPlus.com

Align Now RF Needed (Align Now RF Needed) 87
Align RF Skipped (Align RF Skipped) 87
Align RF Skipped, Align signal amplitude too low 87
Align 92
Alignment Failed 78
Allowable CF for current span exceeded. 53
Allowable span for current center frequency exceeded 53
Attempt to change signal data failed. 81
Atten auto set to 15 dB 83
Auto Align not available when using Calibration Defaults. 49
Auto ranging... 83
Average Type incompatible for scale. 44
Avg Mode changed to Exp for Examine Meas Type 69
Avg Mode changed to Exp for Examine Meas Type 70
Avg Mode changed to Repeat for Full Meas Type 69
Avg Mode changed to Repeat for Full Meas Type 70
Awaiting trigger 61
Awaiting Trigger, no AUTO Trig. 54
Awaiting valid signal. 82
B7D and/or B7E not found. Code Domain not available.. 83
B7D and/or B7E not found. Mod Acc not available. 83
B7D DSP Code Fail. Reload Opt BAH. Contact your Service Center 57
B7D DSP Code Fail. Reload Opt BAH. Contact your Service Center.. 56
B7D DSP Code Fail. Reload Opt. 202. Contact your Service Center 65
B7D DSP Code Fail. Reload Opt. 202. Contact your Service Center. 65
B7D DSP Code Install Fail Opt.229. Contact your Service Center. 67
B7D DSP Code Install Fail Opt.231. Contact your Service Center. 68
B7D DSP Code Reload Fail Opt.229. Contact your Service Center. 67
B7D DSP Code Reload Fail. Opt.231. Contact your Service Center.. 68
Bad or missing floppy disk 47
Bad or missing floppy disk 52

ManualsPlus.com

Bad, missing, or unformatted disk. 47
Bad, missing, or unformatted disk. 52
Band Measurement not defined for Out of Band. 58
Block data error 38
Block data not allowed 38
Break freq > FFT filter edge 73
Burst Delay out of limit for EVM (2 ms) 75
Burst Delay out of limit for EVM (2 ms) 76
Burst not found. 63
Burst not found. 74
Cal Data corrupt. Wideband cal failed. Using previous data. 66
Cal Oscillator Unlock 42
Calibration failed 35
Can not get long code phase (RS-232) 75
Can't Auto-Couple RBW in Zero Span. 48
Can't Auto-Couple Sweep Time in Zero Span 42
Can't Auto-Couple Sweep Time in Zero Span 48
Can't compute result - not enough transitions.. 65
Cancellation disabled while measuring DANL Floor.. 71
Cancellation trace has different X-Scale to Smoothed trace. 72
Cancellation trace is not set to Reference or has no data. 71
Cannot correlate to input signal 61
Cannot correlate to input signal 74
Cannot correlate to input signal 75
Cannot correlate to input signal 76
Cannot correlate to input signal 80
Cannot display Ref Trace because it has no data. 70
Cannot find the Power vs Time Limits File. 58
Cannot find the Power vs Time Limits File. 60
Cannot load a directory 53
Cannot load a directory, please choose a file 53

ManualsPlus.com

Cannot locate the file that contains the list of cable types. 59
Cannot lock to carrier. 68
Cannot open trace file for writing. Save Failed. 71
Cannot save Ref Trace because it contains no data. 71
Cannot sync DPCCH pilot. 74
Cannot synchronize frame trigger 72
Cannot synchronize to RF amplitude (burst error) 73
Cannot update the list of cable types on drive C:. 59
Cannot update the list of cable types. 58
Carrier frequency outside device's transmit band 73
Carrier Not Present 71
Carrier Not Present. Verify frequency and amplitude settings. 72
Carrier Not Present. 58
Carrier Not Present. 59
Carrier Not Present. 67
Carrier Not Present. 83
Carrier power too low for optimum dynamic range 73
Carrier Present. Test Stopped! 59
Channel center frequency outside device's transmit band. 76
Channel frequency outside device's transmit band.. 83
Character data error 39
Character data not allowed 38
Character data too long 39
CMD ERR, <name of offending command> 76
CMD NOT SUPPORTED, <command> 77
Command error 41
Command header error 40
Command not recognized 42
Command not valid in this mode. 77
Command not valid in this model 43
Command not valid when no measurement is active 44

ManualsPlus.com

Connect Amptd Ref Output to Input 49
Connect RF OUT to INPUT 49
Corrupt media 36
Corrupted file 45
Corrupted file 48
Data corrupt or stale. 36
Data corrupt or stale; EEPROM copy of <file> 36
Data corrupt or stale; EEPROM copy of <file> 46
Data corrupt or stale; NRAM copy of <file> 36
Data corrupt or stale; RAM copy of <file> 46
Data out of range 36
Data questionable; EEPROM copy of <file> 46
Data type error 40
DC Coupled 88
Default spur table values loaded. 83
Demod Format setting does not allow this value for Points/Symbol.. 67
Demod ON: reduce span for audible detection 88
Device = Mobile. Code Domain not available. 84
Device = Mobile. Mod Acc not available. 84
Device-specific error 35
Did not find 4 signals > Peak Excursion.. 69
Directory already exists 42
Directory already exists 84
Directory already exists 84
doing Alignment.... 54
DSP algorithm timeout, aborting measurement. 57
DSP timed out, resetting DSP. 61
Dynamic range not optimum 73
EDGE EVM only supports EDGE TCH burst type (Burst Type). 60
EDGE EVM only supports EDGE TCH burst type (Ref Burst) 60
EDGE ORFS only supports EDGE TCH burst type (Burst Type) 60

ManualsPlus.com

EDGE ORFS only supports EDGE TCH burst type (Ref Burst) 60
EDGE PVT only supports EDGE TCH burst type (Burst Type) 60
EDGE PVT only supports EDGE TCH burst type (Ref Burst) 60
EDGE Upgrade (252) unlicensed. Please contact your Agilent Sales Rep. 65
Emission bandwidth not found. Consider increasing span. 63
ENR table will be extrapolated 84
Entire trace is below the threshold level. 84
Entire trace is below threshold level 58
Error reading file: CDMASTUN.CSV. Please reinstall cdmaOne. 62
Error reading file: CDPDMDA. Please reinstall cdmaOne.. 62
Error reading file: CDPPMCO. Please reinstall cdmaOne. 62
Error reading file: CDPPMDA. Please reinstall cdmaOne. 62
Error reading file: OOBSTAB.CSV. Use Edit Table | Save Table. 62
Error reading file: RHODMDA. Please reinstall cdmaOne. 62
Error reading file: RHOPMCO. Please reinstall cdmaOne.. 62
Error reading file: SPCLIMIT.CSV. Cannot use custom limits. 62
EVM Measurement only supports EDGE TCH burst type 74
Execution Error 37
Exponent too large 39
Expression data error 38
Expression data not allowed 38
Ext Ref 88
Ext Ref 93
External LO frequency out of range 88
External mixing is off, can't adjust external preselector 44
External reference missing or out of range 48
Failed to Initialize ISTATE regions. Fatal LDS error 52
Failed to load ENR data. 79
Failed to load Frequency List 79
Failed to load Limit line. 79
Failed to load Loss data 80

ManualsPlus.com

Failed to Load trace. Bad file format. 71
Failed to store ENR data 79
Failed to store Frequency List 79
Failed to store Limit line 80
Failed to store Loss data. 80
Failed to store Trace 80
File access IO busy; duplicate :SERVice[:PRODuction]:CALibrate:BEGin. 47
File access IO busy; :SERVice[:PRODuction]:CALibrate:END without a BEGin. 47
File access is denied 47
File already exists. 45
File already exists. 47
File already exists. 79
File does not exist 79
File is corrupt 45
File is corrupt 48
File name error 45
File name error 46
File name error; Directory does not have a default file type 45
File name error; Directory does not have a default file type 46
File name error; Directory does not support extenders 45
File name error; Directory does not support extenders 46
File name error; Empty filename. 45
File name error; Empty filename. 46
File name error; Illegal extender 45
File name error; Illegal extender 46
File name error; Illegal filename character. 45
File name error; Illegal filename character. 46
File name error; Only one extender character allowed 45
File name error; Only one extender character allowed 46
File name error; Only one: is allowed 45
File name error; Only one: is allowed 46

ManualsPlus.com

File not found 45
File not found 47
File Operation Status; <name> directory deleted 42
File Operation Status; <name> file copied 42
File Operation Status; <name> file deleted 42
File Operation Status; <name> file loaded 42
File Operation Status; <name> file saved 42
File Operation Status; directory <name> created 42
File Operation Status; Volume <name> formatted 42
Final IF Overload (IF/ADC Overrange) 88
Final IF Overload 42
First harmonic is past analyzer frequency limit 55
First IF Overload (IF/ADC Overrange) 88
Flash memory is full 47
Flat corr off (no corresponding status bit) 88
Floppy disk error 45
Floppy disk full 45
Freq corr off (no corresponding status bit) 88
Freq Count: Reduce Span/RBW ratio 42
Freq Count: Reduce Span/RBW ratio 89
Freq outside cal range 89
FreqRefUnlock 93
Frequency Reference Error (Freq Ref Unlocked) 89
Gate option not installed. Results may not be accurate 59
Gate option not installed. Results may not be accurate 60
GET not allowed 40
GSM burst out of limits 72
GSM Hopping enabled, waiting for valid burst 72
GSM Pwr Meas requires trig delay < –50 µs. Delay set to –50 µs 73
GSM RF sync delay is out of range 73
Hardkeys are disabled 60

ManualsPlus.com

Hardware Fail 34
Hardware missing. 36
Hardware missing; no such SIO address. 36
Header separator error. 40
Header suffix out of range 40
HW Diag is OFF 44
IF Gain fixed 89
IF over range req. RF re-range: Meas Restarted. 78
IF Overload 89
Illegal MSDOS name given 79
Illegal parameter value 36
Illegal write access of Flash memory. 48
In <command>: bad data count (<numeric_value>): expected multiple of <numeric_value> 50
In <filename>, line <nnn>: separator missing 50
In <filename>, line <numeric_value>: <xxx> is not numeric. 50
In <filename>, line <numeric_value>: error parsing tokens 50
In <filename>, line <numeric_value>: line too long 50
In <filename>: [DATA] header missing. 49
In <filename>: bad amplitude unit <unit> 50
In <filename>: error reading file 50
Incorrect filename, allowable extension ENR 79
Incorrect filename, allowable extension is .sta 53
Incorrect filename, allowable extension LOS 80
Incorrect filename, allowable extension LST 79
Incorrect filename, allowable extension 79
Incorrect filename, allowable extensions are .gif or .wmf. 52
Incorrect filename, allowable extensions are .gif or .wmf. 53
Incorrect filename, allowable extensions are .trc or .csv 52
Incorrect filename, allowable extensions are .trc or .csv 53
Incorrect filename, allowable extensions LIM 80
Incorrect RBW for demod - change RBW 72

ManualsPlus.com

Incorrect trigger holdoff 73
Input is internal (no corresponding status bit) 89
Input overload 74
Input overload 76
Input power too low 74
Input power too low 75
Input power too low 80
Instrument mode requested is not supported 53
Instrument state may be corrupt, state has been reset to initial values 51
Instrument state set to initial values 51
Insufficient pre-Trig for demod - decrease Trig Delay 72
Interpolation error: cannot compute log of <negative_frequency_value> 50
Invalid Baud Rate 43
Invalid block data 38
Invalid character data 39
Invalid character in number 39
Invalid character 41
Invalid EDGE burst timing 84
Invalid expression 38
Invalid format: CSV files are not supported by this measurement 70
Invalid format: CSV files are not supported by this measurement 84
Invalid frequency list for measurement mode 78
Invalid GSM burst timing 72
Invalid instrument mode 53
INVALID ITEM, <offending item> 77
Invalid Marker Trace. Marker moved to Raw Trace 70
Invalid option, unable to uninstall package 44
Invalid printer response 49
INVALID SAVE REG, <invalid register> 77
Invalid separator 41
Invalid string data 38

ManualsPlus.com

Invalid suffix 39
INVALID TRACE, <trace> 77
Level is low, results may degrade. 61
LO – Stop freq must be >= min system input freq 89
LO Out Unlevel (LO Out Unleveled) 90
LO Unlevel (LO Unleveled) 90
LO Unlock (Synth Unlocked) 90
Log Corr Off (no corresponding status bit) 90
LOG FILE CLEARED 77
LOG FILE FULL, CLEAR FOR FURTHER ERROR LOGGING 77
Lost trigger, aborting measurement. 57
Lower Custom Mask is Invalid! 58
Lower Custom Mask is Invalid! 59
Marker Count:Widen Res BW 90
Marker Freq Count HW Failure 42
Marker X value not adjusted when right of Rise&Fall mark 73
Mask unavailable for current Span - increase to display mask. 60
Mass storage error; EEPROM write timeout on EEPROM 36
Meas Type changed to Examine for Exp Avg Mode 69
Meas Type changed to Examine for Exp Avg Mode 70
Meas Type changed to Full for Repeat Avg Mode 69
Meas Type changed to Full for Repeat Avg Mode 70
Meas Uncal (Oversweep) 90
Meas Uncal 42
Measurement does not support the current radio standard. 60
Measurement failed for unknown reasons. 61
Measurement halted. Press a measurement key to continue. 85
Measurement not defined for Out of Band. 57
Measurement outside Internal Preamp range 90
Measurement partially outside Internal Preamp range 90
Measurement suspended until carrier is turned off. 61

ManualsPlus.com

Measurement uncalibrated, symbol rate exceeds +/-10% nominal. 66
Measurement uncalibrated, wideband calibration required. 66
Media is corrupt 46
Media is not writable 47
Media is not writable 48
Media is not writable 79
Media is protected 45
Media is protected 45
Media is protected 79
Memory limit caused Data Acquisition to be truncated 54
Missing parameter 40
Mode Setup Error. 78
No entries in ENR table 78
No entries in frequency list 78
No entries in Limit Line table. 78
No entries in loss table 79
No error 34
No Fast ADC hardware installed 57
No Fast ADC hardware installed. Meas unavailable. 85
No Fast ADC hardware installed. 57
No Fast ADC hardware installed. 58
No Fundamental > 0 Hz found in given span. 55
No Fundamental > -50 dBm found in given span. 55
No peak found 42
No Peak Found 53
No power at carrier frequency. 76
No ranges are defined. 69
No spurs have been found 69
No trigger before timeout; auto-triggered. 54
Noise Figure DLP requires Noise Source Control Hardware 80
Not enough frequency range to measure harmonics for channel. 85

ManualsPlus.com

Numeric data error 40
Numeric data error; VGR 40
Numeric data not allowed 39
...Averaging unavailable when Sig ID is on 36
...Cannot center unpreselected external mixer. 36
...Command incompatible with band pair marker 36
...External mixing unavailable when preamp on 37
...FFT unavailable when Sig ID is on 37
One or more harmonics beyond freq limit: number decreased. 85
One or more harmonics past freq limit: number decreased 55
Opt 106 demod hardware required. Meas unavailable. 63
Opt 106 hardware required. Preamble sync unavailable. 64
Opt 229 DSP algorithm code file requires upgrade. 67
Opt 229 DSP algorithm coef. file requires upgrade. 67
Opt 231 DSP algorithm code file requires upgrade. 68
Opt 231 DSP algorithm coef. file requires upgrade. 68
Opt 252 DSP algorithm code file requires upgrade. 65
Opt 252 DSP algorithm coef. file requires upgrade. 65
Opt AYX hardware required. Meas unavailable. 56
Opt B7D bootrom requires upgrade. 56
Opt B7E RF hardware required. RF Burst unavailable. 64
Opt BAH DSP algorithm code file requires upgrade. 57
Opt BAH DSP algorithm coef. file requires upgrade. 57
Opt BAH DSP algorithm files failed to load, aborting measure. 57
Opt BAH DSP algorithm files not installed. Meas unavailable. Contact your Service Center. 56
Opt Freq Ref setting does not match external reference. 62
Option activated 85
Option B7D or AYX FADC hardware required. Meas unavailable. 63
Option not installed 42
Option not licensed. 44
Options B7D & B7E hardware required. Meas unavailable. 56

ManualsPlus.com

...Settings Conflict, Preamp unavailable in external mixing mode 37
...Sig ID requires EXTERNAL mixing mode 37
...Sig ID unavailable in Manual:FFT 37
...Sig ID unavailable when Averaging is on 37
...Sig ID unavailable when Signal Track is on. 37
...Signal ID unavailable with Presel Mixer 37
...Signal Track unavailable when Sig ID is on. 37
Out of memory 35
Overload 93
Overload: Reduce Signal and press <ESC> (Input Overload Tripped). 90
PARAMETER ERROR, <name of offending parameter> 77
Parameter not allowed. 40
Parameter unavailable in demod measurements. 64
Payload data pattern '10101010' not present. 64
Peaking Signal (no corresponding status bit). 91
Please set RF input range (INPUT menu) to manual first.. 85
Points/Symbol changed to an even number because of demod format 81
Preferred resolution bandwidth not available.. 55
Preferred resolution bandwidth not available.. 91
Preselector centering failed - inadequate peak 44
Preselector centering failed 43
Preselector is not available at this frequency. 43
Preselector unavailable while in external mixing 44
Pretrigger too long 74
Print failed; Can't open print file desc 48
Print failed; DisplayExport can't create print file 48
Print failed; DisplayExport illegal print language. 48
Print failed; DisplayExport insufficient RAM space 48
Print failed; DisplayExport undetermined error 48
Print failed; Error transferring image to printer 48
Print failed; Printer ioctl failed 48

ManualsPlus.com

Print failed; Unknown printer response 48
Printer interface error 49
Printer not responding 48
Printer not responding; ioctl ERROR 48
Printer out of paper 48
Printer Type is None. 49
Program mnemonic too long. 40
Query DEADLOCKED 34
Query Error. 35
Query INTERRUPTED 34
Query UNTERMINATED after indefinite response. 34
Query UNTERMINATED 34
Queue overflow 31
Radio standard is not supported by the current measurement. 60
RBW limited to 1 kHz when Span > 5 MHz 43
Requested timeslot number not present 73
Require 4 Signals > PEAK EXCURSION above Threshold. 69
Required Input attenuation not calibrated 78
Required payload data pattern ‘10101010’ not present. 64
Required payload data pattern ‘11110000’ not present. 64
Resolution BW < 300kHz.. 59
Resolution BW <300 kHz. 58
Restoration of NVRAM data 47
Restoration of NVRAM data”. 47
RF Board could not detect any bursts in signal. 62
RF Board LO Unlocked. Contact service center. 61
RF Board RF Osc Unlocked. Contact service center. 62
RF Board SR Osc Unlocked. Contact service center. 62
RF re-range required: Meas Restarted.. 78
RF Signal not found.. 61
RS-232 Interface Error 43

ManualsPlus.com

Sample Clock Unlock 41
Sampling Oscillator Unlock; Failure acquiring SO frequency lock 41
SCPI marker query not available in GSM Rise&Fall 73
Search Length is shortened because of high IF Band Width 81
Select a valid Radio Standard/Measurement combination to enable. 60
Self-test failed; EEPROM checksum for 35
Settings conflict; parameter currently disabled 37
Settings conflict;. 36
Shutdown in process. 85
Signal exceeds maximum allowable power. 76
Signal frequency malformed. Signal not added. 82
Signal Ident On, Amptd Uncal (Signal Ident On) 91
Signal level is low. 91
Signal too noisy 73
Signal too noisy 74
Signal too noisy 75
Signal too noisy 75
Signal too noisy 76
Signal too noisy 80
Signal Tracking disabled when measuring DANL Floor (Removal). 72
Signal Tracking is not available when Noise Correction is on 55
Signals to not fit expected Intermod (TOI) pattern 69
Source LO Unlock (Source Synth Unlocked) 91
Source Unlevel (Source Unleveled). 91
Span limited to 5 MHz when RBW < 1 kHz 43
Start – LO freq must be >= min system input freq 91
Start freq must be greater than fixed LO freq 91
Start freq must be greater than start RF freq 91
Start Marker must be at least 1% < Stop Marker. 64
Stop freq must be less than fixed LO freq 92
Stop freq must be less than stop RF freq 92

ManualsPlus.com

Stop IF freq must be less than fixed LO freq 92
Stop Marker must be at least 1% > Start Marker. 64
Store Ref trace before turning on Normalize 53
String data error 38
String data not allowed 38
Suffix error 39
Suffix not allowed 39
Suffix too long 39
Sweep Point/Span ratio below minimum - results may be inaccurate. 60
Sweep Time too fast (<2 sec) 59
Sync is RF Ampl (not Training Seq). Bits not accurate 73
Sync offset value not valid 81
Sync Pattern includes non-hex characters 81
Sync Word Length changed to new upper limit 81
Sync word not found in frame (Burst Type) 56
Sync word not found in frame (Ref Burst). 56
Sync word not found in frame (TSC). 66
Sync word not found in specified timeslot (Burst Type). 56
Sync word not found in specified timeslot (TSC). 66
Sync word not found 72
Sync word not found 73
Sync word not found 75
Sync word not found 76
Sync word not found 81
Syntax error 41
System Alignments, Align Now, All Required. 92
System error 35
System error; Pretune DAC Cal failed midpoint verification 35
System error; Pretune DAC Calibration failed 35
System input frequency out of range. 92
System, Alignments, Align All Now Needed (Align Needed) 92

ManualsPlus.com

System, Alignments, Align All Now, Needed 41
SYSTem:ERRor?. 31
T hot must be greater than T cold. 79
Table could not be loaded. 63
Table could not be saved. 63
Table loaded successfully. 85
Table saved successfully. 85
TG Frequency Limit. 42
TG start freq is less than 1/2 res bw 43
TG start freq is less than 9 kHz 43
The Cable Fault Measurement is active. Mode Setup is disabled. 59
The calibration data is invalid, and has been cleared. 57
The calibration data is invalid, and has been cleared. 85
The file containing the list of cable types has been updated. 59
The file containing the list of cable types has been updated. 86
The regression portion failed. 61
There are no spurs to inspect. 59
There is no valid result to hold.. 65
This measurement does not support the *.CSV file format. 70
This measurement does not support the *.CSV file format. 86
This operation requires a measurement to be active. 58
This operation requires a measurement to be active. 67
This operation requires a measurement to be active. 86
Too many data values at <freq_or_time_value>. 51
Too many digits 39
Too much data; not all points entered. 36
Trace file contains no compatible traces. 71
Trace file saved successfully. 71
Trace file was created by incompatible version of Opt. 226. 71
Trace Menu is unavailable when Sig Ident is ON 43
Trace smoothing: VBW filt or Average Detector; cannot use both 44

ManualsPlus.com

Tracking Generator hardware is not present. Meas unavailable. 57
Tracking Peak Needed.. 86
Trigger Offset unavailable in swept spans 44
Two entries already exist at frequency. 77
Tx Band Spur measurement does not support this frequency band 74
Tx Band Spur measurement not defined for mobiles 73
Unable to Calculate Result using Current Setup. 64
Unable to demodulate signal 74
Unable to format drive 52
Unable to initialize flatness data. 43
Unable to load file. 52
Unable to load file. 52
Unable to load state from file. 51
Unable to load state from register 51
Unable to load state saved from firmware Rev A.xx.xx; Restore Sys\nDefaults 52
Unable to load state 52
Unable to load user state, factory preset was done. 51
Unable to load user state, required instrument mode is not installed 52
Unable to query state 52
Unable to retrieve signal (remote). 82
Unable to save file 52
Unable to save file, invalid path 42
Unable to save state to file. 51
Unable to save state to register 51
Unable to save user state 51
Unable to set state 52
Unable to store flatness data 43
Unable to uninstall personality, file not deletable. 82
Uncal 93
Undefined header 40
Unexpected carrier frequency (BMT only) 73

ManualsPlus.com

Unknown demod status 56
Unknown printer 49
Unlevel 93
Unlock 93
Unpreselected external mixing - no preselector 44
Unsupported printer 49
Upper Custom Mask is Invalid! 58
Upper Custom Mask is Invalid! 59
Use trigger delay to align bit p0 center on marker. 86
Use View/Trace menu when loading or saving logarithmic traces.. 70
User cal invalidated 77
Valid 1xEV burst not found 80
Valid Bluetooth burst not found. (Check Packet Type) 63
Valid burst not found in frame (Burst Type). 66
Valid burst not found in specified timeslot (Burst Type). 66
Valid burst not found 58
Valid burst not found 69
Valid burst not found 81
Valid burst not found. 67
Valid EDGE burst not found in frame (Burst Type) 65
Valid EDGE burst not found in frame (Ref Burst). 65
Valid EDGE burst not found in specified timeslot (Burst Type) 65
Valid GSM burst not found for selected timeslot 74
Valid GSM burst not found in frame (Burst Type). 55
Valid GSM burst not found in frame (Ref Burst) 55
Valid GSM burst not found in specified timeslot (Burst Type) 55
Valid GSM burst not found 72
Valid NADC burst not found 75
Valid PDC burst not found 76
Valid PRACH burst not found. 75
Valid signal not found 81

ManualsPlus.com

Valid signal not found. 65

Video shift off (no corresponding status bit) 92

Video Trigger cannot be active with Average Detector. 53

Video Trigger cannot be used with Mkr Func due to Average Detector 53

Volume <name> formatted. 86

Waiting for end of data acquisition to access floppy disk 86

WARNING: You are about to delete all of the contents of directory xxxxxx “x:\xxxxx\”. Press Delete Now again to proceed or any other key to abort. 86

WBIF ADC Image Calibration Failed 54

WBIF Firmware Reset 54

WBIF Self Test Failed. 54

Wideband calibration not valid until Align Now, All performed. 66

Wrong density floppy inserted 48

ManualsPlus.com

ManualsPlus.com

1 Instrument Messages

ManualsPlus.com

Instrument Messages Introduction

The analyzer can generate various messages that appear on the display during operation. There are four types of messages.

This chapter describes the following types of messages displayed on the analyzer:

User Error Messages	Beginning on page 34, User Error Messages appear when an attempt has been made to set a parameter incorrectly or an operation has failed (such as saving a file). These messages are often generated during remote operation when an invalid programming command has been entered. These messages appear in the status line at the bottom of the display. If you are using the default display colors, the message will appear in yellow. The message will remain until you preset the analyzer, press **ESC**, or another message is displayed on the status line.
Informational Messages	Beginning on page 82, Informational Messages provide information that requires intervention. These messages appear on the status line at the bottom of the display. If you are using the default display colors, the message will appear in green (ESA) or yellow (PSA). The message will remain until you preset the analyzer, press **ESC**, or another message is displayed on the status line. The information provided in brackets, for example <filename> or <directory>, is a variable that represents a specific input provided previously.
Status Messages	Beginning on page 86, Status Messages appear on the right side of the analyzer display and/or set status bits in the SCPI Status Register system. These messages indicate a condition that may result in erroneous data being displayed. Most messages will only be displayed until the error condition is corrected. Multiple messages can be displayed and will be listed in the display area. In each case the name of the corresponding status bit is indicated in parenthesis. It will be noted if only a status bit is used (no message).
Pop-up Messages	These messages indicate a condition that may require intervention. They appear in the middle of the display in a framed box. The message will remain until the appropriate intervention has taken place or the condition has been corrected.

ManualsPlus.com

Error Queues

There are two types of error queues, front panel and remote interface. These two queues are viewed and managed separately. Refer to Table 1-1. for more information on the characteristics of the Error Queue.

Front panel — A summary of the last 11 error messages preceded by an error number may be viewed in the Error Queue by pressing, **System** then **Show Errors**. When a remote interface initiates activity that generates an error, the messages are output to the remote bus. When output to the remote interface, they are preceded by an error number.

Remote interface (SCPI) — When a user error condition occurs in the analyzer as a result of SCPI (remote interface) activity, it is reported to both the front panel display error queue and the SCPI error queue. If it is a result of front panel activity, it reports to the front panel display error queue, and depending on the error, may also report to the SCPI error queue.

Table 1-1. Characteristics of the Error Queue

Characteristic	Front-Panel Display Error Queue	SCPI Remote Interface Error Queue
Capacity (number of errors)	11	30
Overflow Handling	Circular (rotating). Drops oldest error as new error comes in.	Linear, first-in/first-out. Replaces newest error with: –350, `Queue overflow`
Viewing Entries	Press: **System**, **Show Errors**[a]	Use SCPI query `SYSTem:ERRor?`
Clearing the Queue	Press: **System**, **Show Errors**, **Clear Error Queue**	Power up. Send a `*CLS` command. Read last item in the queue.

a. Error history includes the date and time an error last occurred, the error number, the error message, and the number of times the error occurred.

ManualsPlus.com

Error Message Format

The system–defined error numbers are chosen on an enumerated (“1 of N”) basis. The error messages are listed in numerical order according to the error message number. Status and Informational messages without numbers will be listed in alphabetical order following the numerical listing.

In this chapter, an explanation is included with each error to further clarify its meaning. The last error described in each class (for example, –400, –300, –200, –100) is a “generic” error. There are also references to the IEEE Standard 488.2-1992, *IEEE Standard Codes, Formats, Protocols and Common Commands for Use with ANSI/IEEE Std 488.1-1987*. New York, NY, 1992.

Error messages are displayed at the bottom of the screen in the status line. If you are using the default display colors, the message will appear in yellow. The error number is available through the remote interface and the show errors screen; it is not displayed in the status line.

Figure 1-1. Error Message Example

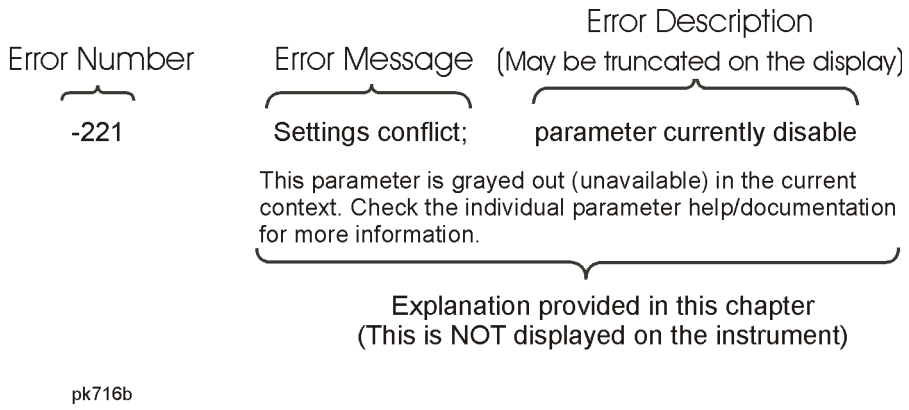

ManualsPlus.com

Error Message Types

Events do not generate more than one type of error. For example, an event that generates a query error will not generate a device-specific, execution, or command error.

–499 to –400: Query Errors

These errors indicate that the analyzer output queue control has detected a problem with the message exchange protocol described in IEEE 488.2, Chapter 6. Errors in this class set the query error bit (bit 2) in the event status register (IEEE 488.2, section 11.5.1). These errors correspond to message exchange protocol errors described in IEEE 488.2, 6.5. In this case:

- Either an attempt is being made to read data from the output queue when no output is either present or pending, or
- Data in the output queue has been lost.

–399 to –300: Device-Specific Errors

An error number in the range –399 to –300 indicates that the analyzer has detected an error where some device operations did not properly complete, possibly due to an abnormal hardware or firmware condition. This is not a error in response to a SCPI query or command, or command execution. The occurrence of any error in this class will cause the device-specific error bit (bit 3) in the event status register to be set.

–299 to –200: Execution Errors

These errors indicate that an error has been detected during analyzer execution.

–199 to –100: Command Errors

These errors indicate that the analyzer parser detected an IEEE 488.2 syntax error. Errors in this class set the command error bit (bit 5) in the event status register (IEEE 488.2, section 11.5.1). In this case:

- Either an IEEE 488.2 syntax error has been detected by the parser (a control-to-device message was received that is in violation of the IEEE 488.2 standard. Possible violations include a data element which violates device listening formats or whose type is unacceptable to the device.), or
- An unrecognized header was received. These include incorrect device-specific headers and incorrect or unimplemented IEEE 488.2 common commands.

64 to 799: Device-Specific Errors

These errors indicate that a device operation did not properly complete, possibly due to an abnormal hardware or firmware condition. These codes are also used for self-test response errors. Errors in this class set the device-specific error bit (bit 3) in the event status register (IEEE 488.2, section 11.5.1).

The <error_message> string for a positive error is not part of the SCPI standard. A positive error indicates that the analyzer detected an error within the GPIB system, within the analyzer firmware or hardware, during the transfer of block data, or during calibration.

Greater than 10000: Measurement Applications Errors

These errors indicate that an error has been detected while executing measurements requiring a personality option such as the GSM Measurement Personality or those measurements found under the **MEASURE** front-panel key in SA mode.

ManualsPlus.com

Instrument Messages

Error Messages

NOTE Error numbers are displayed in the error queue, *not* on the display.

To see an error *number*, press **System**, **Show Errors**.

None `Hardware Fail`

ESA message NOT USED

A hardware failure has occurred. Get in touch with your service center.

0: No Error

0 `No error`

The queue is empty. Either every error in the queue has been read, or the queue was cleared by power-on or `*CLS`.

–499 to –400: Query Errors

NOTE Error numbers are displayed in the error queue, *not* on the display.

To see an error *number*, press **System**, **Show Errors**.

–440 `Query UNTERMINATED after indefinite response`

Indicates that a query was received in the same program message after a query requesting an indefinite response was executed (see IEEE 488.2, 6.3.7.5).

–430 `Query DEADLOCKED`

Indicates that a condition causing a DEADLOCKED query error occurred (see IEEE 488.2, 6.3.1.7). For example, both the input buffer and the output buffer are full and the analyzer cannot continue. The analyzer automatically discards output to correct the deadlock.

–420 `Query UNTERMINATED`

Indicates that a condition causing an UNTERMINATED query error occurred (see IEEE 488.2, 6.3.2.2). For example, the device was addressed to talk and an incomplete program message was received.

–410 `Query INTERRUPTED`

Indicates that a condition causing an INTERRUPTED query error

ManualsPlus.com

occurred (see IEEE 488.2, 6.3.2.7). For example, a query was followed by DAB or GET before a response was completely sent.

–400 `Query Error`

This is a generic query error for devices that cannot detect more specific errors. The code indicates only that a query error as defined in IEEE 488.2, 11.5.1.1.7 and 6.3 has occurred.

–399 to –300: Device-Specific Errors

NOTE Error numbers are displayed in the error queue, *not* on the display.

To see an error *number*, press **System**, **Show Errors**.

–340 `Calibration failed`

The instrument requires an **Align All Now**. Restore the alignment by pressing **System**, **Alignments**, **Align All Now**.

–330 `Self-test failed; EEPROM checksum for` *<card>*

The card identification header for a hardware card is incorrect. If the card is not properly identified, the instrument is likely to be non-functional. Report this error to the nearest Agilent Technologies sales or service office.

–321 `Out of memory`

An internal operation needed more memory than was available. Report this error to the nearest Agilent Technologies sales or service office.

–310 `System error; Pretune DAC Calibration failed`

`System error; Pretune DAC Cal failed midpoint verification`

`System error`

An internal system problem was detected. Report this error to the nearest Agilent Technologies sales or service office.

–300 `Device-specific error`

This is a generic device-dependent error for devices that cannot detect more specific errors. The code indicates only that a device-dependent error as defined in IEEE 488.2, 11.5.1.1.6 has occurred. Report this error to the nearest Agilent Technologies sales or service office.

–299 to –200: Execution Errors

NOTE Error numbers are displayed in the error queue, *not* on the display.

To see an error *number*, press **System**, **Show Errors**.

ManualsPlus.com

–253 `Corrupt media`

A removable media was found to be bad or incorrectly formatted. Any existing data on the media may have been lost.

–250 `Mass storage error; EEPROM write timeout on EEPROM`

Failure to initialize EEPROM. Report this error to the nearest Agilent Technologies sales or service office.

–241 `Hardware missing`

`Hardware missing; no such SIO address`

Missing device hardware. For example, an option is not installed.

–230 `Data corrupt or stale`

`Data corrupt or stale; EEPROM copy of <file>`

`Data corrupt or stale; NRAM copy of <file>`

Possibly invalid data. A new measurement was started but not completed.

–224 `Illegal parameter value`

You have sent a parameter for this command that is not allowed. See the Function Reference.

–223 `Too much data; not all points entered`

Too much data; <description of the type of data exceeded>

Indicates that a legal program data element of block, expression, or string type was received that contained more data than the device could handle due to memory or related device-specific requirements.

–222 `Data out of range`

A legal program data element was parsed but could not be executed because the interpreted value was outside the legal range defined by the device (see IEEE 488.2 11.5.1.1.5). The displayed results may be clipped.

–221 `Settings conflict;`...

...`Averaging unavailable when Sig ID is on`

User in ext mix with Sig ID on and try to select Averaging Mode.

...`Cannot center unpreselected external mixer`

Mixer Type is Unpreselected and user tries Preselector Centering.

...`Command incompatible with band pair marker`

Using remote commands, you have tried to adjust the start or stop frequency of a span pair marker. You can adjust only the center and span.

ManualsPlus.com

...External mixing unavailable when preamp on

Internal preamp is on and user tries to select external mixing.

...FFT unavailable when Sig ID is on

User in ext mix with Sig ID on and try to select Manual:FFT

...Settings Conflict, Preamp unavailable in external mixing mode

User in ext mix and tries turning on internal preamp.

...Sig ID requires EXTERNAL mixing mode

Input Mixer setting is INTERNAL and the user tries Sig ID.

...Sig ID unavailable in Manual:FFT

User in ext mix, in FFT, user tries Sig ID.

...Sig ID unavailable when Averaging is on

User in ext mix, in Averaging Mode, user tries Sig ID.

...Sig ID unavailable when Signal Track is on

User in ext mix, in Signal Track Mode, user tries Sig ID.

...Signal ID unavailable with Presel Mixer

User in Presel mixer, and tries to turn on Sig ID.

...Signal Track unavailable when Sig ID is on

User in ext mix with Sig ID on and try to select Signal Track.

Settings conflict; parameter currently disabled

This parameter is grayed out (unavailable) in the current context. Check the individual parameter help/documentation for more information.

–200 Execution Error

For devices that cannot detect more specific errors, this code indicates only that an execution error as defined in IEEE 488.2, 11.5.1.1.5 has occurred.

–199 to –100: Command Errors

NOTE Error numbers are displayed in the error queue, *not* on the display.

To see an error *number*, press **System**, **Show Errors**.

ManualsPlus.com

–178 `Expression data not allowed`

A legal expression data was encountered, but was not allowed by the device at this point in parsing.

–171 `Invalid expression`

The expression data element was invalid (see IEEE 488.2, 7.7.7.2). For example, unmatched parentheses or an illegal character.

–170 `Expression data error`

This error, as well as errors –171 through –179, is generated when parsing an expression data element. This particular error message is used if the device cannot detect a more specific error.

–168 `Block data not allowed`

A legal block data element was encountered, but not allowed by the device at this point in the parsing.

–161 `Invalid block data`

A block data element was expected, but was invalid (see IEEE 488.2, 7.7.6.2). For example, an `END` message was received before the end length was satisfied.

–160 `Block data error`

This error, as well as errors –161 through –169, is generated when parsing a block data element. This particular error message is used if the device cannot detect a more specific error.

–158 `String data not allowed`

A string data element was encountered, but not allowed by the device at this point in the parsing.

–151 `Invalid string data`

A string data element was expected, but was invalid (see IEEE 488.2, 7.7.5.2). For example, an END message was received before the terminal quote character.

–150 `String data error`

This error, as well as errors –151 through –159, is generated when parsing a string data element. This particular error message is used if the device cannot detect a more specific error.

–148 `Character data not allowed`

A legal character data element was encountered where prohibited by the device.

ManualsPlus.com

–144 `Character data too long`

The character data element contains more than twelve characters (see IEEE 488.2, 7.7.1.4).

–141 `Invalid character data`

Either the character data element contains an invalid character or the particular element received is not valid for the header.

–140 `Character data error`

This error, as well as errors –141 through –149, is generated when parsing a character data element. This particular error message is used if the device cannot detect a more specific error.

–138 `Suffix not allowed`

A suffix was encountered after a numeric element which does not allow suffixes.

–134 `Suffix too long`

The suffix contained more than twelve characters (see IEEE 488.2, 7.7.3.4).

–131 `Invalid suffix`

Attempt to send a SCPI command with a suffix that does not match the current units for the function.

The suffix does not follow the syntax described in IEEE 488.2, 7.7.3.2, or the suffix is inappropriate for this device.

–130 `Suffix error`

This error, as well as errors –131 through –139, is generated when parsing a suffix. This particular error message is used if the device cannot detect a more specific error.

–128 `Numeric data not allowed`

A legal numeric data element was received, but the device does not accept one in this position for the header.

–124 `Too many digits`

The mantissa of a decimal-numeric data element contained more than 255 digits excluding leading zeros (see IEEE 488.2, 7.7.2.4.1).

–123 `Exponent too large`

The magnitude of an exponent was greater than 32000 (see IEEE 488.2, 7.7.2.4.1).

–121 `Invalid character in number`

An invalid character for the data type being parsed was encountered. For example, an alpha in a decimal numeric or a “9” in octal data.

ManualsPlus.com

–120 `Numeric data error; VGR`

`Numeric data error`

This error, and errors –121 through –129, is generated when parsing a data element that appears to be numeric, including non-decimal numeric types. This message is used if the device cannot detect a more specific error.

–114 `Header suffix out of range`

The value of a header suffix attached to a program mnemonic makes the header invalid.

–113 `Undefined header`

The header is syntactically correct, but it is undefined for this specific device. For example, `*XYZ` is not defined for any device.

–112 `Program mnemonic too long`

The header contains more than twelve characters (see IEEE 488.2, 7.6.1.4.1).

–111 `Header separator error`

A character which is not a legal header separator was encountered while parsing the header.

–110 `Command header error`

An error was detected in the header. This message is used when the device cannot detect the more specific errors described for errors –111 through –119.

–109 `Missing parameter`

Fewer parameters were received than required for the header. For example, the `*ESE` common command requires one parameter, so receiving `*ESE` is not allowed.

–108 `Parameter not allowed`

More parameters were received than expected for the header. For example, the `*ESE` common command only accepts one parameter, so receiving `*ESE 0,1` is not allowed.

–105 `GET not allowed`

A Group Execute Trigger was received within a program message (see IEEE 488.2, 7.7). Correct the GPIB controller program so that the `GET` does not occur within a line of GPIB program code.

–104 `Data type error`

The parser recognized a data element that is not allowed. For example, numeric or string data was expected, but block data was encountered.

ManualsPlus.com

–103 `Invalid separator`

The parser was expecting a separator and encountered an illegal character. For example, the semicolon was omitted after a program message unit.

–102 `Syntax error`

An unrecognized command or data type was encountered. For example, a string was received when the device does not accept strings.

–101 `Invalid character`

A syntactic command contains a character which is invalid for that type. For example, a header containing an ampersand, such as “SETUP&”. This error might be used in place of error numbers –114, –121, –141, and some others.

–100 `Command error`

This is a generic syntax error for devices that cannot detect more specific errors. The code indicates only that a command error as defined in IEEE 488.2, 11.5.1.1.4 has occurred.

64 to 799: Device-Specific Errors

64 `System, Alignments, Align All Now, Needed`

102 There is too much 50 MHz energy at the RF port for alignments to run. Reduce input power and run alignments again.

103 `Sampling Oscillator Unlock; Failure acquiring SO frequency lock`

Report this error to the nearest Agilent Technologies sales or service office.

104 `1st LO Unlock; Failure acquiring FracN LO frequency lock`

`1st LO Unlock; Failure acquiring single loop FracN LO lock`

The first LO on has lost phase lock. Report this error to the nearest Agilent Technologies sales or service office.

105 `2nd LO Unlock`

The second LO has lost phase lock. Report this error to the nearest Agilent Technologies sales or service office.

106 `4th LO Unlock`

The fourth LO has lost phase lock. Report this error to the nearest Agilent Technologies sales or service office.

107 `Sample Clock Unlock`

Report this error to the nearest Agilent Technologies sales or service office.

ManualsPlus.com

108 `Cal Oscillator Unlock`

Report this error to the nearest Agilent Technologies sales or service office.

129 `Meas Uncal`

The measurement is uncalibrated, usually due to sweeping a narrow RBW filter too quickly. Check the sweep time, span, and bandwidth settings, or press **Auto Couple**.

143 `Final IF Overload`

Either increase input attenuation or decrease the input signal level.

163 `Freq Count: Reduce Span/RBW ratio`

The span is too wide for the current resolution bandwidth. Either reduce the span or increase the RBW.

187 `Directory already exists`

190 `Unable to save file, invalid path`

191 `File Operation Status; directory <name> created`

`File Operation Status; <name> directory deleted`

`File Operation Status; <name> file copied`

`File Operation Status; <name> file deleted`

`File Operation Status; <name> file loaded`

`File Operation Status; <name> file saved`

`File Operation Status; Volume <name> formatted`

196 `Can’t Auto-Couple Sweep Time in Zero Span`

197 `Marker Freq Count HW Failure`

201 `Option not installed`

The desired operation cannot be performed because a required option is not installed. For example, pressing **Source** with no tracking generator installed in the analyzer will generate this error.

202 `No peak found`

No signal peak was found that meets the criteria under **Peak Search**, **Search Param Criteria**.

204 `TG Frequency Limit`

The tracking generator has reached the limit of its allowable frequency range.

205 `Command not recognized`

Indicates that the command sent from the remote interface was not recognized. Check the programming guide for correct syntax.

ManualsPlus.com

206 `Unable to initialize flatness data`

A failure occurred in setting the flatness data in the internal EEROM. Get in touch with your local Agilent Technologies sales and service office.

207 `Unable to store flatness data`

A failure occurred in setting the flatness data in the internal EEROM. Get in touch with your local Agilent Technologies sales and service office.

208 `Preselector is not available at this frequency.`

Preselection of frequencies below ~ 3 GHz is not supported. Preselector centering can be performed only for frequencies above 3.025 GHz.

209 `Preselector centering failed`

An attempt to center the preselector failed. You tried to center the preselector with the analyzer span too wide. Preselector centering can be performed only for spans below 1.123 GHz.

211 `RBW limited to 1 kHz when Span > 5 MHz`

In spans greater than 5 MHz, narrow (digital) resolution bandwidths, below 1 kHz, are not available.

213 `Span limited to 5 MHz when RBW < 1 kHz`

In narrow (digital) resolution bandwidths, below 1 kHz, spans greater than 5 MHz are not available.

214 `TG start freq is less than 9 kHz`

Tracking generator uncalibrated below 9 kHz.

215 `TG start freq is less than 1/2 res bw`

Tracking generator uncalibrated at start frequencies below 1/2 the current resolution bandwidth.

216 `Invalid Baud Rate`

Attempt to use invalid baud rate. Refer to the programming language chapter of *Agilent Technologies ESA Series Spectrum Analyzer Programmer's Guide* for more information.

217 `RS-232 Interface Error`

An error occurred on the serial interface.

219 `Command not valid in this model`

Indicates that the command sent from the remote interface does not apply to this analyzer model number. For example, attempting to center the preselector in an analyzer without a preselector will generate this error.

220 `Trace Menu is unavailable when Sig Ident is ON`

ManualsPlus.com

221 `Invalid option, unable to uninstall package`

You have attempted to remove a personality that is not currently installed. Verify command was entered correctly.

222 `Command not valid when no measurement is active`

Indicates that the command sent from the remote interface must be issued while a measurement is running in the analyzer.

223 `Trigger Offset unavailable in swept spans`

Trigger Offset is only available in Zero Span. Refer to “Trig” in your Agilent Spectrum Analyzer User’s Guide for a description of this function.

224 `Option not licensed.`

The selected option requires a license. Refer to the installation procedures in the user’s guide available for this particular option.

226 `Actual Trig Delay = Remote Trig Delay + Remote Trig Offset`

228 `Preselector centering failed - inadequate peak`

You tried to center the preselector with a trace peak of insufficient level. You may have pressed **Presel Center** with the marker placed below the signal peak.

229 `3 – 26.5 GHz preselector bypassed, can’t adjust`

The microwave preselector has been bypassed. Attempts to press or send the SCPI commands for **Presel Center** or **Presel Adjust** will result in this error.

230 `Unpreselected external mixing - no preselector`

While using external mixing with an unpreselected mixer, attempts to press or send the SCPI commands for **Presel Center** or **Presel Adjust** will result in this error.

231 `Preselector unavailable while in external mixing`

The internal preselectors cannot be used while in external mixing.

232 `External mixing is off, can’t adjust external preselector`

The preselector is unavailable when external mixing is turned off.

238 `Trace smoothing: VBW filt or Average Detector; cannot use both`

239 `HW Diag is OFF`

332 `Average Type incompatible for scale.`

Amplitude Scale command should be sent prior to the Average Type command.

ManualsPlus.com

601 PSA only
612 ESA only `File not found`

The analyzer could not find the specified file.

601 `Floppy disk full`

The floppy disk is full. Clear some space by deleting unwanted files.

602 PSA only
605 ESA only `Media is protected`

A save was attempted to a write-protected device.

602 `Floppy disk error`

An unknown error has occurred while accessing the floppy disk.

603 PSA only
615 ESA only `File is corrupt`

`Corrupted file`

The file that you were trying to load is corrupt.

604 PSA only
607 ESA only `File name error`

`File name error; Directory does not have a default file type`

`File name error; Directory does not support extenders`

`File name error; Empty filename`

`File name error; Illegal extender`

`File name error; Illegal filename character`

`File name error; Only one: is allowed`

`File name error; Only one extender character allowed`

An invalid file name was specified. Use filenames with a maximum of 8 characters (letters and digits only), and use a 3-character extension. File names are not case-sensitive. This error also occurs if you try to delete a nonexistent file.

615 PSA only
604 ESA only `File already exists`

You attempted to save to a file that already exists. Either delete or rename the existing file or select a new name, then try again.

602 PSA only
605 ESA only `Media is protected`

A save was attempted to a write-protected device.

ManualsPlus.com

605 `Data corrupt or stale; EEPROM copy of <file>`

WARNING: Contact the factory if you see this error.

This error indicates that a file stored in EEPROM has become corrupt and the Hamming codes are unable to repair the data.

When the EEPROM file has been corrupted, the system will store default values into both the Non-Volatile RAM and EEPROM copies of the file. If this error occurs often, it may indicate that there is a problem with the physical memory.

`Data corrupt or stale; RAM copy of <file>`

This error indicates that a file stored in Non-Volatile RAM has become corrupt and the Hamming codes are unable to repair the data.

When a Non-Volatile file has this error, the system will first try to verify the state of the data in EEPROM and if valid it will copy the data in EEPROM into the Non-Volatile ram copy of the file. When this happens, the system will remain calibrated. If this error occurs often, it may indicate that there is a problem with the physical memory.

606 `Data questionable; EEPROM copy of <file>`

EEPROM error occurred. The EEPROM copy of an internal file is either corrupt or otherwise unusable. The system automatically updates the non-volatile RAM copy of the EEPROM copy using a default initialization. The actual EEPROM file is left as it is. Report this error to the nearest Agilent Technologies sales or service office.

606 `Media is corrupt`

A save was attempted to a corrupt device.

604 PSA only
607 ESA only `File name error`

`File name error; Directory does not have a default file type`

`File name error; Directory does not support extenders`

`File name error; Empty filename`

`File name error; Illegal extender`

`File name error; Illegal filename character`

`File name error; Only one: is allowed`

`File name error; Only one extender character allowed`

An invalid file name was specified. Use filenames with a maximum of 8 characters (letters and digits only), and use a 3-character extension. File names are not case-sensitive. This error also occurs if you try to delete a nonexistent file.

ManualsPlus.com

609 `Restoration of NVRAM data`

This error indicates that a file stored in Non-Volatile RAM has been corrected based on the Hamming codes stored with the file. After the correction, the file will contain the same data as when the instrument was shut off. If this error continues to occur on successive power cycles, it may indicate that there is a problem with the physical memory.

627 PSA only
609 ESA only `Media is not writable`

A save was attempted to a read-only device or device that could not be written to. Try a known-good disk.

ERROR/NUMBER "609 `Restoration of NVRAM data`" IS ALREADY USED FOR HAPPENING ./storage/directory/NRAM_Directory.cc HAP_nramDataCorrected

610 `File access is denied`

The file is protected or hidden and cannot be accessed.

611 `File access IO busy;`
`duplicate :SERVice[:PRODuction]:CALibrate:BEGin`

`File access IO busy; :SERVice[:PRODuction]:CALibrate:END without a BEGin`

601 PSA only
612 ESA only `File not found`

The analyzer could not find the specified file.

613 `Flash memory is full`

The internal flash memory is full. Clear some space by deleting unwanted files. If your analyzer has a serial number less than US41440000 or MY41440000 and Option B72 has not been installed, you may also increase the flash memory size by purchasing Option B72.

763 PSA only
614 ESA only `Bad, missing, or unformatted disk`

`Bad or missing floppy disk`

The floppy disk is not inserted properly, is not formatted, or the directory cannot be read. Insert a known good disk and try again.

615 PSA only
604 ESA only `File already exists`

You attempted to save to a file that already exists. Either delete or rename the existing file or select a new name, then try again.

ManualsPlus.com

603 PSA only
615 ESA only `File is corrupt`

`Corrupted file`

The file that you were trying to load is corrupt.

617 `Wrong density floppy inserted`

The floppy disk has the wrong density. It should be 1.44 MB.

618 `Illegal write access of Flash memory`

Attempt to write to an unavailable area of internal flash memory.

619 `Can’t Auto-Couple RBW in Zero Span`

You sent a remote command to set the RBW into auto while in zero span. (Remote interface only.)

620 `Can’t Auto-Couple Sweep Time in Zero Span`

You sent a remote command to set the sweep time to auto while in zero span. (Remote interface only.)

622 `External reference missing or out of range`

The external frequency reference signal is missing, has too low an amplitude, or does not match the frequency value that you previously entered into instrument memory.

623 `Printer not responding`

`Printer not responding; ioctl ERROR`

Check the printer. It may not be connected properly or turned on.

625 `Printer out of paper`

Load paper in printer.

626 `Print failed; Can’t open print file desc`

`Print failed; DisplayExport can’t create print file`

`Print failed; DisplayExport illegal print language`

`Print failed; DisplayExport insufficient RAM space`

`Print failed; DisplayExport undetermined error`

`Print failed; Error transferring image to printer`

`Print failed; Printer ioctl failed`

`Print failed; Unknown printer response`

627 PSA only
609 ESA only `Media is not writable`

A save was attempted to a read-only device or device that could not be written to. Try a known-good disk.

ManualsPlus.com

651 `Connect RF OUT to INPUT`

Attempt to align the tracking generator without its output connected. Connect the tracking generator RF OUT to the analyzer **INPUT**.

652 `Connect Amptd Ref Output to Input`

For Agilent Technologies E4402B, E4403B, E4404B, E4405B, E4407B, and E4408B only: you must connect the **AMPTD REF OUTPUT** to the analyzer **INPUT** with the appropriate cable.

653 `Auto Align not available when using Calibration Defaults`

The Auto Alignment system cannot be used until an **Align Now All** is executed by pressing **System**, **Alignments**, **Align Now**, **All**. On all Agilent Technologies ESA spectrum analyzer models except Agilent Technologies E4401B and E4411B, you must connect the **AMPTD REF OUT** to the **INPUT** with the appropriate cable to perform this alignment. *For Agilent Technologies E4401B and E4411B only:* disconnect any signals from the **INPUT** prior to performing this procedure.

701 `Invalid printer response`

In attempting to identify the printer an invalid response was received. Check that you are using a supported printer. Be sure you are using the proper cable and that it is securely fastened.

702 `Unsupported printer`

A printer which is recognized, but known to be unsupported was identified. This printer cannot be used with the analyzer. For example, a printer only supported by Microsoft Windows will generate this error.

703 `Unknown printer`

In attempting to identify the printer, a valid response was received but the printer is not known to the analyzer. Use the **Custom** printer menu under **Print Setup** to configure the printer.

704 `Printer interface error`

An error occurred while trying to print. Make sure the printer is turned on and properly connected.

705 `Printer Type is None`

The current printer type is set to **None**, so no print operations are possible. Change the type in the **Print Setup** menu and try again.

727 `In <filename>: [DATA] header missing`

This message indicates that the data section of a file did not begin with the token [**DATA**].

ManualsPlus.com

728 `In <filename>, line <nnn>: separator missing`

The [**HEADER**] section of a file contains entries requiring an equal (=) sign, such as <keyword> = <value>. This message appears if the equal sign does not appear on the line.

729 `In <filename>: error reading file`

Appears when loading data from a limit line or corrections disk file and a failure to the file occurs.

730 `In <filename>, line <numeric_value>: line too long`

When loading data from a limit line or corrections disk file, this message will appear if the length of any line in the file exceeds 255 characters.

731 `In <command>: bad data count (<numeric_value>): expected multiple of <numeric_value>`

This message indicates that the data sent to a corrections or limit table via the **DATA** or **MERGE** commands does not have the expected length for the table. For example, this message would appear if an attempt were made to merge 7 numeric values into a limit table, since each logical entry requires 3 values (frequency, amplitude, and connected).

732 `In <filename>, line <numeric_value>: error parsing tokens`

This message may appear when loading data from a limit line or corrections disk file. It indicates a problem in the attempt to break a string of text into tokens. There may be too few tokens in the string. In other words, the file content must match the expected format. This typically happens when there are too few numeric values in the [**DATA**] section of a limit or corrections file.

733 `In <filename>, line <numeric_value>: <xxx> is not numeric`

This message may appear when loading data from a limit line or corrections disk file. It indicates that a non-numeric token <xxx> was found where a numeric token was expected. In other words, the file content must match the expected format.

734 `Interpolation error: cannot compute log of <negative_frequency_value>`

Occurs when the frequency interpolation of a limit line is set to log and the start frequency of the instrument is negative. The <negative_frequency_value> is limited to
– 80 MHz, so it may not match the frequency that caused the error.

735 `In <filename>: bad amplitude unit <unit>`

This message indicates that unit <unit> is not recognized or supported.

ManualsPlus.com

736 `Too many data values at <freq_or_time_value>`

This message may appear when data is sent to a corrections or limit table using the **DATA** or **MERGE** commands. These tables limit the number of amplitudes associated with a frequency or time to 2 or less. This message will appear if an attempt is made to attach 3 or more values to a frequency or time.

751 `Instrument state set to initial values`

`Instrument state may be corrupt, state has been reset to initial values`

While trying to load a trace or state, the state information was found to be in error. This may be because the state had been stored on a later revision of analyzer firmware. A default set of state variables was loaded instead. There is nothing wrong with the analyzer.

An error in the internal instrument state has been detected. The state has been reset to a default value.

752 `Unable to load state from file`

Attempt to load a state from a file failed.

753 `Unable to save state to file`

Attempt to save a state to a file failed. See the associated error messages for the cause (press **System**, **Show Errors**).

For PSA: If this error occurs after a mode switch that takes longer then normal, you may need to free up some instrument memory. When you switch to a different measurement mode, the analyzer must temporarily store instrument state data. If you have less then 500 kB of available memory, the switching process can take over 1 minute and result in this error. Use the File key menu to delete any unnecessary files from instrument memory.

755 `Unable to load state from register`

Attempt to load a state from an internal state register failed.

756 `Unable to save state to register`

Attempt to save a state to an internal state register failed. See the associated error messages for the cause (press **System**, **Show Errors**).

757 `Unable to load user state, factory preset was done`

A user preset failed, so the factory preset values were used. Save a valid state into user preset and try again.

758 `Unable to save user state`

Attempt to save a user preset state failed. See the associated error messages for the cause (press **System**, **Show Errors**).

ManualsPlus.com

759 `Unable to load state saved from firmware Rev A.xx.xx; Restore Sys\nDefaults`

`Unable to load state`

A saved state file from a newer firmware revision was attempted to be loaded into an older instrument.

760 ESA only `Unable to query state`

Query of state over the remote interface was unsuccessful.

761 ESA only `Unable to set state`

Attempt to set the state over the remote interface was unsuccessful.

762 ESA only `Incorrect filename, allowable extensions are .trc or .csv`

Attempt to save a trace to a file with an incorrect extension.

762 ESA only `Unable to load file`

A failure occurred while loading a file; the file was not loaded.

763 PSA only
614 ESA only `Bad, missing, or unformatted disk`

`Bad or missing floppy disk`

The floppy disk is not inserted properly, is not formatted, or the directory cannot be read. Insert a known good disk and try again.

763 ESA only `Incorrect filename, allowable extensions are .gif or .wmf`

Attempt to save a screen image to a file with an incorrect extension.

764 `Unable to save file`

Attempt to save a file failed; the file was not saved. See the associated error messages for the cause (press **System**, **Show Errors**).

765 `Unable to load file`

Attempt to load a file failed; the file was not loaded.

766 `Unable to format drive`

767 `Failed to Initialize ISTATE regions. Fatal LDS error`

Attempt to initialize the instrument state has failed. Cycle instrument power. If this fails to correct the problem, contact your nearest Agilent Technologies service center.

768 `Unable to load user state, required instrument mode is not installed`

Attempt to load a state failed, because the state was saved with a measurement personality that is not currently loaded. Load the appropriate personality and try again.

ManualsPlus.com

769 ESA only `Invalid instrument mode`

You have attempted to switch to an instrument mode that is currently not installed. Confirm that the mode name (for `INST:SEL`) or number (for `INST:NSEL`) was entered correctly and that the requested personality is actually installed in the instrument.

770 `Incorrect filename, allowable extensions are .gif or .wmf`

You sent a remote command to save a screen file but did not specify a valid extension.

`Incorrect filename, allowable extension is .sta`

You sent a remote command to save a state file but did not specify a valid extension.

`Incorrect filename, allowable extensions are .trc or .csv`

You sent a remote command to save a trace file but did not specify a valid extension.

770 `Instrument mode requested is not supported`

Instrument mode specified with: INST command is not valid. Refer to Chapter 5, "Instrument Subsystem" of *Agilent Technologies ESA Series Spectrum Analyzer Programmer's Guide* for more information.

771 `Store Ref trace before turning on Normalize`

A reference trace must be available for the Normalize function to be activated. Refer to "View/Trace" in the Agilent ESA Spectrum Analyzer User's Guide where the **Normalize** key function is explained in detail.

772 `Cannot load a directory`

`Cannot load a directory, please choose a file`

You have selected a directory instead of a file when attempting to perform the Load function under the **File** front-panel key.

780 `No Peak Found`

781 `Video Trigger cannot be active with Average Detector`

You sent a remote command to do one of the following:

- Turn on video trigger while the Average Detector or a Marker Function is active.
- Turn on the Average Detector or a Marker Function while Video Trigger is active.

782 `Video Trigger cannot be used with Mkr Func due to Average Detector`

783 `Allowable span for current center frequency exceeded`

784 `Allowable CF for current span exceeded`

ManualsPlus.com

787 `WBIF Self Test Failed`

Variable resistor 122 performs a loop-back self-test on power up. It does an ADC image calibration, then stores a sine wave in RAM and plays it out the DAC. It then measures the carrier power, image rejection and signal-to-noise ratio. If this test fails, the wideband IF pc assemblies are either incorrectly installed or have a hardware failure. Call your Agilent Service Representative.

There is diagnostic information available for the CE. The self test can be run with DIAG:WBIF:TEST? This command returns 4 values: passed, carrier power, image rejection and signal-to-noise ratio.

First look at the carrier power. If it is below –50, the LVDS cable is probably missing or faulty. If the carrier power is above 0 dBm, image rejection less than 40 but signal-to-noise ratio is more than 50, there is probably a bad ADC.

788 `WBIF ADC Image Calibration Failed`

The Opt 122 card uses two ADCs that must be kept in perfect synchronization to avoid unwanted images appearing in the spectrum. The instrument will occasionally perform an ADC Image Calibration (formerly known as Step Cal) to re-synchronize the ADCs. This calibration is only known to fail if there is a hardware problem.

789 `WBIF Firmware Reset`

Opt 122 has a local microprocessor controlling the hardware trigger. If this microprocessor resets, it will automatically restart and begin taking data again, posting this notice to the user. While this should never happen, it is a self-recovering error that requires no action on the part of the user. If, however, it starts to occur frequently, contact your Agilent service representative to find out if there is a firmware upgrade to solve this problem.

791 `Acquiring Data...`

795 `No trigger before timeout; auto-triggered`

797 `Awaiting Trigger, no AUTO Trig`

801 `Memory limit caused Data Acquisition to be truncated`

805 `doing Alignment...`

Greater than 10000: Measurement Applications Errors

NOTE Error numbers are displayed in the error queue, *not* on the display.

To see an error *number*, press **System**, **Show Errors**.

ManualsPlus.com

10008 to 10517: Power Suite Error Messages An error number in this range indicates the instrument has detected an error relating to the Power Suite functionality.

10008 `Preferred resolution bandwidth not available.`

The calculated required resolution bandwidth for this measurement is not available.

10010 `One or more harmonics past freq limit: number decreased.`

Highest harmonic was past the frequency limit of the analyzer, so the number of measured harmonics was decreased.

10011 `First harmonic is past analyzer frequency limit.`

`First harmonic was past the frequency limit, so no harmonics can be measured. The analyzer will simply measure the fundamental.` If you have the Agilent E4407B analyzer, Option AYZ allows the use of HP/Agilent 11970 Series, and HP/Agilent 11974 external mixers to extend the frequency range to 110 GHz. Operation to 325 GHz is also possible with non-HP/Agilent mixers.

10012 `No Fundamental > 0 Hz found in given span.`

`There were no frequencies greater than 0 Hz in the starting span, so the centre frequency at measurement entry will be used as the fundamental.`

10013 `No Fundamental > -50 dBm found in given span.`

There was no fundamental found, so the centre frequency at measurement entry will be used as the fundamental.

10020 `Signal Tracking is not available when Noise Correction is on.`

If signal tracking is turned on while noise correction is on, it will be turned off. To use the signal tracking function, first turn noise correction off.

10138 `Valid GSM burst not found in frame (Burst Type)`

No active GSM bursts that match the selected burst type have been detected in the RF input signal. Search was performed over a complete GSM frame.

10139 `Valid GSM burst not found in specified timeslot (Burst Type)`

No active GSM bursts that match the selected burst type have been detected in the RF input signal. Search was performed over the specified timeslot.

10140 `Valid GSM burst not found in frame (Ref Burst)`

No active GSM bursts that match the selected burst type have been detected in the RF input signal. Search was performed over the specified complete GSM frame using the Ref Burst type setting.

ManualsPlus.com

10141 `Sync word not found in frame (Burst Type)`

One or more active GSM bursts that match the selected burst type have been detected in the RF input signal, but none contain the selected Training Sequence Code (TSC). The search was performed over the complete GSM frame.

10142 `Sync word not found in specified timeslot (Burst Type)`

One or more active GSM bursts that match the selected burst type have been detected in the RF input signal, but none contain the selected Training Sequence Code (TSC). The search was only performed over the specified timeslot setting.

10143 `Sync word not found in frame (Ref Burst)`

One or more active GSM bursts that match the selected burst type have been detected in the RF input signal, but none contain the selected Training Sequence Code (TSC). The search was only performed using the Reference Burst type and the Ref TSC settings over the complete GSM frame.

10144 `Unknown demod status`

Demodulation is in an unknown state. Press **Preset**. If the error persists, get in touch with your service center.

10145 `Opt AYX hardware required. Meas unavailable.`

Option AYX must be installed for this measurement to be enabled.

10146 `Options B7D & B7E hardware required. Meas unavailable.`

The RF Communications Hardware (Option B7E) and Digital Signal Fast ADC (Option B7D) cards required to perform the demodulation are not present in the analyzer.

10147 `Opt B7D bootrom requires upgrade.`

The (Option B7D) bootrom revision is not supported by the currently loaded personality version. Refer to the user's guide for the personality in use.

10148 `Opt BAH DSP algorithm files not installed. Meas unavailable. Contact your Service Center.`

The Digital Signal Processor algorithm files required to perform the demodulation are not present in the analyzer.

10148 `B7D DSP Code Fail. Reload Opt BAH. Contact your Service Center.`

The Digital Signal Processor algorithm files required to perform the demodulation are not present in the IDSP: drive.

ManualsPlus.com

10149 `Opt BAH DSP algorithm code file requires upgrade.`

The Digital Signal Processing algorithm code file revision is not supported by the currently loaded personality version. Refer to the user's guide for the personality in use for more information on installation/upgrade.

10150 `Opt BAH DSP algorithm coef. file requires upgrade.`

The Digital Signal Processor algorithm coefficient file revision is not supported by the currently loaded personality version. Refer to the user's guide for the personality in use.

10151 `Opt BAH DSP algorithm files failed to load, aborting measure.`

The Digital Signal Processor algorithm files required to perform the demodulation are corrupt and cannot be loaded properly. Reinstall measurement personality.

10151 `B7D DSP Code Fail. Reload Opt BAH. Contact your Service Center.`

The Digital Signal Processor algorithm files required to perform the demodulation are present in the IDSP: drive and cannot be loaded properly into DSP RAM. Reinstall measurement personality.

10152 `Lost trigger, aborting measurement.`

The selected trigger source was present at the start of the measurement, but timed out before the measurement completed.

10153 `DSP algorithm timeout, aborting measurement`

The Digital Signal Processor demodulation algorithm timed-out for an unknown reason. This message normally indicates a problem with the modulated signal.

10154 `Measurement not defined for Out of Band.`

You have changed to an out-of-band frequency range. The band measurement only operates in the selected band.

10155 `No Fast ADC hardware installed`. Meas unavailable.

The analyzer cannot use sweep times of less than 5 msec when Option B7D or Option AYX is not installed. Therefore, the measurement will not be executed.

10156 `No Fast ADC hardware installed.`

The analyzer cannot use sweep times of less than 5 msec when Option B7D or Option AYX is not installed resulting in all the radio standards not being supported.

10156 `The calibration data is invalid, and has been cleared.`

10157 `Tracking Generator hardware is not present. Meas unavailable.`

The measurement requires a built-in tracking generator.

ManualsPlus.com

10158 `This operation requires a measurement to be active.`

10159 `Entire trace is below threshold level`

The measurement cannot operate properly because the trace has completely fallen below the threshold level. Change the threshold level to view trace.

10160 `Valid burst not found`

Cannot find a valid burst, either because it is not fully on the display, or the level is too low to be detected properly.

10160 `Upper Custom Mask is Invalid!`

The user-specified upper custom mask cannot be resolved into a limit line. The format may be bad.

10161 `No Fast ADC hardware installed.`

Cannot use sweeptimes less than 5 ms, due to the lack of a fadc, therefore the meas will be severely restricted.

10161 `Lower Custom Mask is Invalid!`

The user-specified lower custom mask cannot be resolved into a limit line. The format may be bad.

10162 `Resolution BW <300 kHz.`

This error message is a warning that the resolution bandwidth has been set below 300 kHz. The test results will not meet GSM specifications.

10163 `Cannot find the Power vs Time Limits File.`

The limit line definition file for the GSM standards has been deleted. This message is displayed while the **Measure** key is grayed out. Reinstall the GSM measurement personality.

10164 `Band Measurement not defined for Out of Band.`

You are attempting to monitor the band but have set the frequency outside the band. Reset the band for the particular standard for which you are testing or use the channel setting which does not require a frequency to be set. (**Meas Setup**, **Method (Channel)**).

10165 `Carrier Not Present.`

10166 `Cannot update the list of cable types.`

The cable file may have been moved or deleted accidentally. Reinstall the measurement personality. This message is applicable to the GSM (Option BAH) and Distance to Fault (Option 226) measurement personality options.

ManualsPlus.com

10166 `Cannot locate the file that contains the list of cable types.`

The cable file may have been moved or deleted accidentally. Reinstall the measurement personality. This message is applicable to the GSM (Option BAH) and Distance to Fault (Option 226) measurement personality options.

10167 `The file containing the list of cable types has been updated.`

10168 `Cannot update the list of cable types on drive C:`

The file update failed.

10170 `The Cable Fault Measurement is active. Mode Setup is disabled.`

Mode setup is not available in the cable fault utility.

10172 `Sweep Time too fast (<2 sec)`

The sweep time must be set to 2 seconds or longer for the results to be valid.

10173 Carrier Not Present.

10177 `There are no spurs to inspect.`

You have attempted to switch the **Inspect Spur** menu key to the **On** position after the measurement has finished, but found no spurs.

10178 `Carrier Not Present.`

10179 `Carrier Present. Test Stopped!`

A carrier was found in the transmit band. Either disable the carrier or insert a bandpass filter for the receive bandwidth.

10180 `Gate option not installed. Results may not be accurate.`

This measurement method requires the use of the time-gate (option 1D6) in order to gate the spectrum during the 50-90% part of the burst. If the gate option is not installed, the measurement will still run although this warning will be displayed.

10181 `Upper Custom Mask is Invalid!`

The user-specified upper custom mask cannot be resolved into a limit line. The format may be bad.

10182 `Lower Custom Mask is Invalid!`

The user-specified lower custom mask cannot be resolved into a limit line. The format may be bad.

10183 `Resolution BW <300kHz.`

The test will not meet EDGE specifications because the resolution BW has fallen below 300 kHz.

ManualsPlus.com

10184 Cannot find the Power vs Time Limits File.

Cannot find the limit line definition file for the EDGE standards. This message is displayed while the **Measure** key is grayed out.

10185 Gate option not installed. Results may not be accurate.

10186 Measurement does not support the current radio standard.

The measurement you have chosen is currently greyed out. Select a radio standard which is supported or configure this measurement manually (**Mode Setup**, **Radio Std**. **None**).

10186 EDGE EVM only supports EDGE TCH burst type (Burst Type)

10187 Radio standard is not supported by the current measurement.

The standard you have chosen is currently greyed out. Select a radio standard which is supported by the current measurement or configure this measurement manually (**Mode Setup**, **Radio Std**. **None**).

10187 EDGE ORFS only supports EDGE TCH burst type (Burst Type)

10188 EDGE PVT only supports EDGE TCH burst type (Burst Type)

10189 EDGE PVT only supports EDGE TCH burst type (Ref Burst)

10190 Select a valid Radio Standard/Measurement combination to enable.

The Enable All Measurements menu key was pressed when it was disabled. To enable select a radio standard that is supported by the current measurement or a measurement that supports the current radio standard.

10190 EDGE ORFS only supports EDGE TCH burst type (Ref Burst)

10191 Mask unavailable for current Span - increase to display mask.

The current span setting is either narrower than the mask width or so wide that there are too few display points to allow the mask to be drawn. Increase or decrease the span to display the mask.

10191 EDGE EVM only supports EDGE TCH burst type (Ref Burst)

10192 Sweep Point/Span ratio below minimum - results may be inaccurate.

The sweep point to span ratio is below the minimum required to ensure the bucket ratio is large enough to test DVB-T masks

10218 Hardkeys are disabled.

Some of the forms (for example Receiver Spurious in GSM) do not allow you to close the form without either formally accepting or cancelling the form settings. For this reason, all of the hardkeys are disabled until you terminate the form.

ManualsPlus.com

10219 `Awaiting trigger`

The measurement requires a trigger to be present. If the trigger does not occur or is delayed, this message will be displayed. Check your trigger settings.

10227 `Measurement suspended until carrier is turned off.`

The receive channel power and the receive spur measurements are specified with the attenuation set to 0 dB. To prevent overload, the frequency spectrum of interest is monitored for signal levels which exceed a specified threshold before setting the attenuator to 0 dB. If a carrier is found, this message is displayed and the completion of the measurement will not occur until the carrier is removed. The carrier check may be turned off using the properties form under the front-panel **Mode Setup** key. You may also change the signal threshold which determines a carrier on the properties form.

10228 `Cannot correlate to input signal.`

This error is normally generated because of one of the following reasons: 1. There is no carrier signal.
2. Walsh channels other than the pilot are active.
3. There is some other modulation problem that will prevent the measurement from being made.
This problem must be corrected before the measurement can continue.

10229 `The regression portion failed.`

This message occurs when (Option B7D) is not functioning properly. Demodulation measurements (modulation accuracy and code domain) might fail as a result of this error.

10230 `DSP timed out, resetting DSP.`

Digital Signal Processor was unable to finish the selected measurement within the given period of time. Restart the measurement.

10231 `Measurement failed for unknown reasons.`

Check instrument settings and restart measurement.

10232 `RF Signal not found.`

This message is generated if there is no signal at the center frequency that is greater than 10 dB above the displayed average noise level.

10233 `Level is low, results may degrade.`

The signal being measured is of low power. The results may not be as accurate as they would be if the signal level was higher.

10237 `RF Board LO Unlocked. Contact service center.`

This message occurs if the local oscillator on the (Option B7E) is in an unlocked state. This indicates broken hardware.

ManualsPlus.com

10238 `RF Board SR Osc Unlocked. Contact service center.`

This message occurs if the sample rate (SR) oscillator on Option B7E is in an unlocked state. This indicates broken hardware.

10239 `Opt Freq Ref setting does not match external reference.`

This message is generated if Source is set to External on the properties form under the front-panel **Mode Setup** key and the frequency on the same form is set to a frequency that does not match the frequency of the signal being used as the external reference.

10240 `RF Board RF Osc Unlocked. Contact service center.`

This message occurs if the reference oscillator on the (Option B7E) is in an unlocked state. This indicates broken hardware.

10241 `RF Board could not detect any bursts in signal.`

This message is generated when the trigger is set to RF Burst and (Option B7E) cannot detect a burst.

10245 `Error reading file: SPCLIMIT.CSV. Cannot use custom limits.`

The file could be missing or corrupt. Create a new limits file. Alternatively, the actual limits defined in the file might not allow the measurement to be executed. Redefine the limits or use the default limits. Restart the measurement.

10246 `Error reading file: CDMASTUN.CSV. Please reinstall cdmaOne.`

The file is missing or corrupt. Please reinstall the cdmaOne personality.

10247 `Error reading file: CDPDMDA. Please reinstall cdmaOne.`

The file is missing or corrupt. Please reinstall the cdmaOne personality.

10248 `Error reading file: CDPPMCO. Please reinstall cdmaOne.`

The file is missing or corrupt. Please reinstall the cdmaOne personality.

10249 `Error reading file: CDPPMDA. Please reinstall cdmaOne.`

The file is missing or corrupt. Please reinstall the cdmaOne personality.

10250 `Error reading file: RHODMDA. Please reinstall cdmaOne.`

The file is missing or corrupt. Please reinstall the cdmaOne personality.

10251 `Error reading file: RHOPMCO. Please reinstall cdmaOne.`

The file is missing or corrupt. Please reinstall the cdmaOne personality.

10256 `Error reading file: OOBSTAB.CSV. Use Edit Table | Save Table.`

This error is generated when you try to load a table (using the **Load Table** key on page 2 of the edit table form menu) before a table has been saved. You must first save a table using the **Save Table** key before trying to load a table using the **Load Table** key.

ManualsPlus.com

10259 `Table could not be saved.`

This message occurs if the C: drive is full or corrupt. Check the amount of space left on the drive.

10260 `Table could not be loaded.`

When trying to load a table, the previous table has been somehow corrupted. Use the **Save Table** key to save a valid table. Then edit the valid table, save it, and try to load it again.

10264 `Emission bandwidth not found. Consider increasing span.`

This error is normally generated when attempting occupied bandwidth measurements. The “X dB” value you entered (**Meas Setup**, **X dB**) to calculate the emission bandwidth is the difference between the highest point on the trace and the point “X dB” down on either side of the maximum. If the actual difference is less than the value entered, the emission bandwidth cannot be computed. Some responses to this situation are as follows:

1. Connect a signal to the input. (If there is no signal present, the difference between the trace minimum and maximum will generally be less than “X dB”.)
2. Increase the span. (If the signal is wide, the shoulders of the signal might not be present on the screen, and again, the difference between the trace minimum and maximum will be less than “X dB”.)
3. Center the signal. (There must be a point on the trace that is “X dB” down from the maximum on both sides of that maximum.)

10286 `Burst not found.`

Either the signal being analyzed has insufficient power, the rising or falling edges cannot be detected, or the burst is less than 126 microseconds.

10287 `Valid Bluetooth burst not found. (Check Packet Type)`

The burst that has been found does not correspond to the currently selected Bluetooth packet type (the burst length may be too short).

10288 `Option B7D or AYX FADC hardware required. Meas unavailable.`

The measurement you are attempting requires either the DSP and Fast ADC (Option B7D) or the Fast ADC (Option AYX) card to perform the demodulation, but neither are present in the analyzer.

10289 `Opt 106 demod hardware required. Meas unavailable.`

A demod measurement was attempted with no Bluetooth FM demod card present (Option 106).

ManualsPlus.com

10290 `Parameter unavailable in demod measurements.`

You have selected (by remote SCPI command) either RF Amplitude sync or Video trigger while running one of the demod measurements.

10291 `Opt B7E RF hardware required. RF Burst unavailable.`

You have selected (by remote SCPI command) RF Burst Trigger with no digital demodulation RF card present (RF Communications Hardware (Option B7E)).

10320 `Opt 106 hardware required. Preamble sync unavailable.`

You have selected (by remote SCPI command) preamble sync with no Bluetooth FM demodulation card present (Option 106).

10321 `Start Marker must be at least 1% < Stop Marker.`

You have attempted to input a start marker value that will result in the difference between the start and stop markers being less than 1%.

10322 `Stop Marker must be at least 1% > Start Marker.`

You have attempted to input a stop marker value that will result in the difference between the start and stop markers being less than 1%.

10323 `Unable to Calculate Result using Current Setup.`

You have changed the setup parameters such that the marker lines used to measure the power cannot be displayed therefore accurate measurements cannot be made.

10340 `'10101010' pattern not detected - results may be inaccurate.`

This message is displayed if the measurement cannot detect the '10101010' pattern in the payload. The measurement will continue and carry out the calculations on the payload data supplied, but may not be correct.

10350 `Payload data pattern '10101010' not present.`

This message is displayed when the "Payload Data" parameter is set to Auto and the measurement has not detected either of the required patterns in the payload.

10351 `Required payload data pattern '10101010' not present.`

This message is displayed after successfully measuring and holding the '11110000' pattern if the measurement is restarted and the '10101010' data pattern is not detected.

10352 `Required payload data pattern '11110000' not present.`

This message is displayed after successfully measuring and holding the '10101010' pattern if the measurement is restarted and the '11110000' data pattern is not detected.

ManualsPlus.com

10353 `There is no valid result to hold.`

You have attempted to hold either Δ f1 or Δf2 before it has been measured.

10360 `Can’t compute result - not enough transitions.`

This message is displayed when the measurement cannot find either a 111, 000, 101 or 010 pattern and is therefore unable to calculate the low or high frequency deviations.

10389 `Valid EDGE burst not found in frame (Burst Type)`

No active EDGE bursts that match the selected burst type have been detected in the RF input signal. Search was performed over the complete EDGE frame.

10390 `Valid EDGE burst not found in specified timeslot (Burst Type)`

No active EDGE bursts that match the selected burst type have been detected in the RF input signal. Search was performed over the specified timeslot.

10391 `Valid EDGE burst not found in frame (Ref Burst)`

No active EDGE bursts that match the selected burst type have been detected in the RF input signal. Search was performed over the specified complete EDGE frame using the Ref Burst setting.

10392 `B7D DSP Code Fail. Reload Opt. 202. Contact your Service Center`

The DSP algorithm files required to perform the demodulation are not present in the instrument ISDP: drive.

10393 `Opt 252 DSP algorithm code file requires upgrade.`

10394 `Opt 252 DSP algorithm coef. file requires upgrade.`

10395 `B7D DSP Code Fail. Reload Opt. 202. Contact your Service Center.`

The DSP algorithm files required to perform the demodulation are present in the instrument ISDP: drive, but cannot be loaded properly into DSP RAM.

10396 `EDGE Upgrade (252) unlicensed. Please contact your Agilent Sales Rep.`

10400 `Valid signal not found.`

This error is normally generated because of one of the following reasons:

1. There is no carrier signal.
2. The carrier signal power has changed during the measurement, causing ADC to over/under range.
3. There is some other modulation problem that will prevent the measurement from being made. This problem must be corrected before the measurement can continue.

ManualsPlus.com

10401 `Valid burst not found in frame (Burst Type).`

No active bursts that match the Burst Type have been detected in the RF input signal. The search was performed over the complete frame.

10402 `Valid burst not found in specified timeslot (Burst Type).`

No active bursts that match the Burst Type have been detected in the RF input signal. The search was only performed over the specified timeslot setting.

10403 `Sync word not found in frame (TSC).`

One or more active EDGE bursts that match the Normal Burst Type have been detected in the RF Input signal, but none contain the selected Training Sequence Code (TSC). The search was performed over the complete EDGE frame.

10404 `Sync word not found in specified timeslot (TSC).`

One or more active EDGE bursts that match the Normal Burst Type have been detected in the RF Input signal, but none contain the selected Training Sequence Code (TSC). The search was only performed over the specified timeslot setting.

10409 `Wideband calibration not valid until Align Now, All performed.`

Wideband calibration corrections cannot be applied to current demodulation results. Results will not meet specified demodulation performance levels until an Align Now, All has been performed.

10410 `Measurement uncalibrated, wideband calibration required.`

Wideband calibration corrections cannot be applied to the current demodulation results. Results will not meet specified demodulation performance levels until **Wideband Cal** has been selected and successfully performed.

10411 `Measurement uncalibrated, symbol rate exceeds +/-10% nominal.`

Wideband calibration corrections cannot be applied to current demodulation results, due to the **Symbol Rate** setting exceeding +/-10% of the nominal value. Results may not meet specified demodulation performance levels.

10412 `Cal Data corrupt. Wideband cal failed. Using previous data.`

Wideband calibration procedure failed for an unknown reason. New calibration data was not saved. Previous wideband calibration data is being used, if available. However, it is not acceptable. Before re-attempting Wideband Cal, ensure connection between the **AMPTD REF OUT** and the **INPUT 50** Ω is in place. If the error persists, get in touch with your service center.

ManualsPlus.com

10413 `B7D DSP Code Install Fail Opt.229. Contact your Service Center.`

The Digital Signal Processor algorithm files required to perform the demodulation are not present in the analyzer. Reinstall the measurement personality and contact your service center.

10414 `Opt 229 DSP algorithm code file requires upgrade.`

The Digital Signal Processing algorithm code file revision is not supported by the currently loaded personality version. Refer to the user's guide for the personality in use for more information on installation/upgrade.

10415 `Opt 229 DSP algorithm coef. file requires upgrade.`

The Digital Signal Processor algorithm coefficient file revision is not supported by the currently loaded personality version. Refer to the user's guide for the personality in use for more information on installation/upgrade.

10416 `B7D DSP Code Reload Fail Opt.229. Contact your Service Center.`

The Digital Signal Processor algorithm files required to perform the demodulation are corrupt and cannot be loaded properly. Reinstall the measurement personality and contact your service center.

10417 `This operation requires a measurement to be active.`

The analyzer cannot perform this operation, because it requires a measurement to be running and no measurement is running.

10418 `Demod Format setting does not allow this value for Points/Symbol.`

Invalid Points/Symbol selection attempted for the given Demod Format setting.

10419 `Carrier Not Present.`

A carrier signal/burst is expected at the analyzer input. This signal cannot be found; however, the measurement will still run. Check input signal connection.

10420 `Valid burst not found.`

This error only occurs when **RF Amptd** is selected for **Burst Sync**. It indicates that a valid burst envelope which meets the specified Burst Search Threshold was not found within the specified Burst Search Length. Note that the demodulation measurement will proceed by attempting to demodulate the signal without Burst Sync alignment. Possible causes may be:

1. Carrier signal is not actually bursted.
2. Burst Search Threshold and/or Burst Search Length may need to be adjusted.

ManualsPlus.com

10421 `Cannot lock to carrier.`

This error only occurs when attempting to demodulate OFFSET QPSK signals. It indicates that the demodulation algorithm is unable to lock to your signal. Possible causes may be:

1. There is no carrier signal.
2. Carrier signal is present, but Demod settings do not match the modulation format of the OFFSET QPSK signal being measured.
3. OFFSET QPSK signal is too noisy to achieve carrier lock.

10425 `B7D DSP Code Install Fail Opt.231. Contact your Service Center.`

The Digital Signal Processor algorithm files required to for the 89600 VSA SW are not present in the analyzer. Reinstall the measurement personality and contact your service center.

10426 `Opt 231 DSP algorithm code file requires upgrade.`

The Digital Signal Processing algorithm code file revision is not supported by the currently loaded personality version. Refer to the user's guide for the personality in use for more information on installation/upgrade.

10427 `Opt 231 DSP algorithm coef. file requires upgrade.`

The Digital Signal Processor algorithm coefficient file revision is not supported by the currently loaded personality version. Refer to the user's guide for the personality in use for more information on installation/upgrade.

10428 `B7D DSP Code Reload Fail. Opt.231. Contact your Service Center.`

The Digital Signal Processor algorithm files required for the 89600 VSA SW are corrupt and cannot be loaded properly. Reinstall the measurement personality and contact your service center.

ManualsPlus.com

10450 `Avg Mode changed to Repeat for Full Meas Type.`

Meas Type has been changed to Full. Exponential Average Mode is not available for Full Meas Type therefore Average Mode has been changed to Repeat.

10451 `Avg Mode changed to Exp for Examine Meas Type.`

Meas Type has been changed to Examine. Repeat Average Mode is not available for Examine Meas Type therefore Average Mode has been changed to Exponential.

10452 `Meas Type changed to Examine for Exp Avg Mode.`

Average Mode has been changed to Exponential. Full Meas Type is not available for Exponential Average Mode therefore Meas Type has been changed to Examine.

10453 `Meas Type changed to Full for Repeat Avg Mode.`

Average Mode has been changed to Repeat. Examine Meas Type is not available for Repeat Average Mode therefore Meas Type has been changed to Full.

10454 `Valid burst not found.`

Cannot find a valid burst, either because it is not fully on the display, or the level is too low to be detected properly.

10509 `Did not find 4 signals > Peak Excursion.`
or
`Require 4 Signals > PEAK EXCURSION above Threshold.`

Using the current instrument settings, the measurement cannot locate four signals with enough energy or resolution to perform an accurate measurement.

10510 `Signals to not fit expected Intermod (TOI) pattern.`

Based on the current analyzer settings, the measurement cannot find two signals of high enough amplitude that can be resolved in such a manner that the third order products would lie within the measured span.

10511 `100 spurs found. Additional spurs ignored.`

There are too many spurs for the table (the limit is 100), and any additional spurs that are found will be ignored

10512 `No spurs have been found.`

You have started a measurement in examine meas type, in single or continual sweep mode, or full meas type in single sweep mode, but no spurs were found.

10513 `No ranges are defined.`

There are no active ranges in the range table. The user will need to activate at least one range.

ManualsPlus.com

10514 `Avg Mode changed to Repeat for Full Meas Type`

Meas Type has been changed to Full. Exponential Average Mode is not available for Full Meas Type therefore Average Mode has been changed to Repeat.

10515 `Avg Mode changed to Exp for Examine Meas Type`

Meas Type has been changed to Examine. Repeat Average Mode is not available for Examine Meas Type therefore Average Mode has been changed to Exponential.

10516 `Meas Type changed to Examine for Exp Avg Mode`

Average Mode has been changed to Exponential. Full Meas Type is not available for Exponential Average Mode therefore Meas Type has been changed to Examine.

10517 `Meas Type changed to Full for Repeat Avg Mode`

Average Mode has been changed to Repeat. Examine Meas Type is not available for Repeat Average Mode therefore Meas Type has been changed to Full.

10524 to 10561: Phase Noise Error Messages (Option 226) An error number in this range indicates the instrument has detected an error relating to the Phase Noise personality.

10524 `This measurement does not support the *.CSV file format.`

You cannot load or save base instrument traces, as this is not supported by the Log Plot measurement.

10525 `Invalid format: CSV files are not supported by this measurement.`

You cannot load or save base instrument traces, as this is not supported by the Log Plot measurement.

10525 `Use View/Trace menu when loading or saving logarithmic traces.`

You cannot load CSV format trace files or save traces in the CSV format in the Log Plot measurement of the Phase Noise Measurement Personality.

10526 `Cannot display Ref Trace because it has no data.`

Reference trace cannot be displayed, as there is currently no data assigned to it - use the functions under the Store Ref Trace menu, or load a trace to assign some data.

10527 `Invalid Marker Trace. Marker moved to Raw Trace.`

Cannot place markers on the reference trace, because the reference trace is currently turned off or has no data.

ManualsPlus.com

10529 `Failed to Load trace. Bad file format.`

The load trace operation could not be completed, as the input file was not in the expected format. You can only load traces that were previously saved using the 'Save Trace' feature.

10530 `Trace file contains no compatible traces.`

The trace file may have been created by another version of the Phase Noise personality, which uses a different trace format that is incompatible with the version you are running. Please check you are running the most up to date version of the personality.

10531 `Trace file was created by incompatible version of Opt. 226`

The trace file may have been created by another version of the Phase Noise personality, which uses a different trace format that is incompatible with the version you are running. Please check you are running the most up to date version of the personality.

10532 `Cannot open trace file for writing. Save Failed.`

Cannot write the trace file to the destination filename. This could be because the disk is full, or possibly due to a filename error. If using a floppy disk, check there is a formatted disk in the drive.

10533 `Cannot save Ref Trace because it contains no data.`

Check the Ref Trace is turned on, and contains some valid trace data.

10534 `Trace file saved successfully.`

The trace saving operation was successful.

10535 `Carrier Not Present`

No Carrier > -50 dBm found at the analyzer input within the search span. Solution: Modify center frequency to be closer to actual carrier, or alternatively apply carrier of sufficient amplitude at the current center frequency.

10535 `Cancellation trace is not set to Reference or has no data.`

When performing phase noise cancellation, you need to supply a reference trace that will be used to cancel out the background noise of the analyzer. The reference trace must be in Reference (View) mode, and selected by the Ref Trace parameter under the Cancellation menu.

10536 `Cancellation disabled while measuring DANL Floor.`

Phase Noise cancellation does not make sense when measuring the DANL Floor, so for this reason it has been disabled.

ManualsPlus.com

10537 `Cancellation trace has different X-Scale to Smoothed trace.`

When performing phase noise cancellation, you need to supply a reference trace that will be used to cancel out the background noise of the analyzer. The reference trace must have been measured over the same range of offsets, and on the same instrument as the current measurement being performed.

10560 `Carrier Not Present. Verify frequency and amplitude settings.`

No Carrier > –50 dBm found at the analyzer input within the search span. Solution: Modify center frequency to be closer to actual carrier, or alternatively apply carrier of sufficient amplitude at the current center frequency.

10561 `Signal Tracking disabled when measuring DANL Floor (Removal).`

Measuring the DANL Floor with DANL Method set to Removal requires that the user remove the signal and attach a load to the analyzer RF Input. Signal Tracking requires that the carrier be measured many times per measurement, so the two are inherently incompatible.

10601 to 10700: GSM and EDGE Error Messages (Options BAH and 202) An error number in this range indicates the instrument has detected an error relating to the GSM or EDGE personality.

10602 `Sync word not found`

An attempt to position a GSM trace into the mask, when not enough data was present. Try using the **Restart** key to clear the problem. This can be caused by a bad GSM burst, or the RF Sync Delay set too far.

10604 `GSM burst out of limits`

The GSM signal did not fit into the mask in the Power vs. Time measurement.

10606 `Insufficient pre-Trig for demod - decrease Trig Delay`

10608 `Incorrect RBW for demod - change RBW`

10610 `GSM Hopping enabled, waiting for valid burst`

10612 `Invalid GSM burst timing`

A GSM-like burst was acquired, but its timing is not valid. Ensure the correct **Burst Type** has been selected.

10614 `Valid GSM burst not found`

In a GSM measurement, data was acquired but a GSM burst was not found, with the timeslot mode disabled.

10616 `Cannot synchronize frame trigger`

Cannot synchronize the frame trigger to the even second clock.

ManualsPlus.com

10618 Dynamic range not optimum

10620 Cannot synchronize to RF amplitude (burst error)

10622 GSM RF sync delay is out of range

Change RF Sync Delay.

10624 Sync word not found

In a GSM measurement using demodulation, the training sequence code (sync word) could not be found.

10626 Signal too noisy

In a GSM measurement, indicates that a burst could not be found in a signal that appears noisy.

10628 Sync is RF Ampl (not Training Seq). Bits not accurate

10630 Marker X value not adjusted when right of Rise&Fall mark

10632 Incorrect trigger holdoff

10634 Break freq > FFT filter edge

10636 SCPI marker query not available in GSM Rise&Fall

10638 GSM Pwr Meas requires trig delay < –50 µs. Delay set to –50 µs

10640 Carrier frequency outside device’s transmit band

The entered channel/carrier frequency is not within the range of your current mode setup selection of standard and device.

10642 ADC overload -- Carrier not at expected frequency

The carrier frequency of the signal may not match the instruments channel frequency setting.

10644 Requested timeslot number not present

The selected timeslot is not on. (Timeslot is referenced to the trigger point.)

10646 Tx Band Spur measurement not defined for mobiles

Only base station testing is available.

10648 Carrier power too low for optimum dynamic range

For better dynamic range, transmit band spur measurements require >10 dBm signal power at the RF input port.

10650 Unexpected carrier frequency (BMT only)

The transmit band spur measurement only allows bottom (B), middle (M), and top (T) channel frequencies for each supported frequency band. The carrier frequency must be set to the bottom, middle or top frequency of the current frequency band.

ManualsPlus.com

10652 `EVM Measurement only supports EDGE TCH burst type`

10654 `Unable to demodulate signal`

10655 `Input overload`

Excessive input power has been detected which will cause the ADC to clip the signal. Reduce the signal level, change the attenuator setting (under **Input** menu), or press **Restart** if the **RF Input Range** is **Auto**.

10656 `Tx Band Spur measurement does not support this frequency band`

The transmit band spur measurement does not support all of the commercially available frequency bands. You need to change your selection under **Mode Setup**, **Radio**, **Band** to one of the supported bands.

10657 `Pretrigger too long`

10658 `Valid GSM burst not found for selected timeslot`

In a GSM measurement, data was acquired but a GSM burst was not found, with the timeslot mode enabled.

10701 to 10800: W-CDMA Error Messages (Option BAF) An error number in this range indicates the instrument has detected an error relating to the W-CDMA personality.

10702 `Signal too noisy`

10704 `Input power too low`

The instrument only identifies a channel as active if it meets the default threshold criteria that it is within 20 dB of the highest power code channel. The threshold can be changed using the Active Set Threshold function in the Meas Setup menu.

10768 `Cannot correlate to input signal`

Cannot correlate to the input signal and no active channel is found. (from the composite EVM measurement) An active channel must meet the default threshold criteria that it is within 20 dB of the highest power code channel. The threshold can be changed using the active set threshold function in the Meas Setup menu.

10772 `Burst not found.`

Either the signal being analyzed has insufficient power, the rising or falling edges cannot be detected, or the burst is less than 126 microseconds.

10776 `Cannot sync DPCCH pilot.`

`This error message appears when an in Slot power measurement (Chip Power) is selected and the DPCCH sync is not done correctly.`

ManualsPlus.com

10778 `Valid PRACH burst not found.`

This error message appears when an PRACH power measurement (Waveform/Chip Power) is selected and a valid PRACH burst is not found.

10801 to 10900: cdma2000 Error Messages (Option B78) An error number in this range indicates the instrument has detected an error relating to the cdma2000 personality.

10824 `Signal too noisy`

10826 `Input power too low`

The instrument only identifies a channel as active if it meets the default threshold criteria that it is within 20 dB of the highest power code channel. The threshold can be changed using the Active Set Threshold function in the Meas Setup menu.

10868 `Can not get long code phase (RS-232)`

For MS (mobile station) measurements, the long code phase information could not be obtained from the signal at the RS-232 port (from code domain power measurement or composite EVM measurement).

10872 `Cannot correlate to input signal`

Cannot correlate to the input signal and no active channel is found. (from composite EVM measurement) An active channel must meet the default threshold criteria that it is within 20 dB of the highest power code channel. The threshold can be changed using the active set threshold function in the Meas Setup menu.

10901 to 10925: NADC Error Messages (Option BAE) An error number in this range indicates the instrument has detected an error relating to the NADC personality.

10902 `Sync word not found`

In an EVM measurement, the sync word is not found and the synchronization cannot be established when **Sync Word** is selected in the **Burst Sync** menu.

10904 `Valid NADC burst not found`

A valid NADC burst is not found when the **Device** is MS.

10906 `Signal too noisy`

The valid EVM measurement cannot be performed, because the input signal is too noisy.

10908 `Burst Delay out of limit for EVM (2 ms)`

In an EVM measurement, the **Burst Delay** value must be less than 2 ms.

ManualsPlus.com

10926 to 10950: PDC Error Messages (Option BAE) An error number in this range indicates the instrument has detected an error relating to the PDC personality.

10926 `Sync word not found`

In an EVM measurement, the sync word is not found and the synchronization cannot be established when **Sync Word** is selected in the **Burst Sync** menu.

10928 `Valid PDC burst not found`

A valid PDC burst is not found when the **Device** is MS.

10930 `Signal too noisy`

The valid EVM measurement cannot be performed, because the input signal is too noisy.

10932 `Burst Delay out of limit for EVM (2 ms)`

In an EVM measurement, the **Burst Delay** value must be less than 2 ms.

10951 to 10975: cdmaOne Error Messages (Option BAC) An error number in this range indicates the instrument has detected an error relating to the cdmaOne personality.

10952 `Signal exceeds maximum allowable power`

10954 `Input overload`

Excessive input power has been detected which will cause the ADC to clip the signal. Reduce the signal level, change the attenuator/max total power setting (under **Input** menu), or press **Restart** if the **RF Input Range** is **Auto**.

10956 `Channel center frequency outside device's transmit band.`

10960 `No power at carrier frequency`

No power was detected as a CW or a modulated signal.

10962 `Cannot correlate to input signal`

A correlation failure with the pilot CDMA channel occurred during synchronous demodulation.

10976 to 11000: Phase Noise Error Messages (Option 226) An error number in this range indicates the instrument has detected an error relating to the Phase Noise personality.

10976 `CMD ERR, <name of offending command>`

When a command or command argument is not recognized by the parser a command error is generated.

ManualsPlus.com

10977 `PARAMETER ERROR, <name of offending parameter>`

When the “GRAT” or “ANNOT” 8566 series commands are used with arguments other than ON, OFF, 1 or 0.

10978 `INVALID ITEM, <offending item>`

The invalid item message appears when a value that is not part of the commands list of enumerated arguments is entered.

10979 `INVALID SAVE REG, <invalid register>`

When the RCLS or RC commands are used to recall a state register that wasn’t previously saved with the SAVES or SV commands.

10980 `INVALID TRACE, <trace>`

When the argument to a trace command is not part of the predefined trace enumeration (TRA, TRB or TRC).

10981 `CMD NOT SUPPORTED, <command>`

Command not supported errors are generated when a valid 8566 command that is not supported by Chameleon is executed.

10982 `LOG FILE FULL, CLEAR FOR FURTHER ERROR LOGGING`

10983 `LOG FILE CLEARED`

12000 to 12999: Noise Figure Error Messages (Option 219) An error number in this range indicates the instrument has detected an error relating to the Noise Figure personality.

12116 `Two entries already exist at frequency.`

When specifying limit line point, if there are more than two points at the same frequency, the new limit point is discarded and the existing limit is used.

12219 `Command not valid in this mode.`

Indicates that the command sent from the Remote interface does not apply for this DLP.

12303 `User cal invalidated`

The existing user cal has been invalidated because of one of the following reasons:

- Meas mode changed
- Freq outside cal range
- Fixed LO changed
- Sideband changed

ManualsPlus.com

12304 `Alignment Failed`

Calibration failed because an error was encountered at some point during the calibration (for example gain < 0)

12305 `Mode Setup Error`

A mode setup error occurred because of one of the following:

- System input frequency out of range
- External LO frequency out of range
- Stop freq must be less than fixed LO freq
- Start freq must be greater than start IF freq
- LO – Stop freq must be >= min system input freq
- Start freq must be greater than fixed LO freq
- Stop IF freq must be less than fixed LO freq
- Start – LO freq must be >= min system input freq
- Stop freq must be less than stop RF freq
- Start freq must be greater than start RF freq

12307 `Required Input attenuation not calibrated`

Corrected measurements have been requested and the required RF front-end setting of x dB has not been calibrated.

12308 `Invalid frequency list for measurement mode`

A frequency within the frequency list cannot be used to make a measurement in the current mode.

12309 `No entries in frequency list`

A measurement was attempted with List frequency mode or a SCPI query of the frequency list table was made and the frequency list table is empty.

12310 `No entries in ENR table`

A measurement was attempted or a SCPI query of an ENR table was made and there were no entries in the relevant ENR table (Common, Meas or Cal).

12311 `No entries in Limit Line table`

An attempt is made to either display or test against a limit line table which has no entries.

12312 `RF re-range required: Meas Restarted.`

During a continuous measurement, a change of RF front-end attenuation was required. To do this the measurement needs to be restarted.

12313 `IF over range req. RF re-range: Meas Restarted.`

During a continuous measurement, an IF section over range condition occurred, requiring a change of RF front-end attenuation. To do this, the measurement needs to be restarted.

ManualsPlus.com

12314 `No entries in loss table`

A measurement is attempted or a SCPI query of a before or after loss table is made and there are no entries in the relevant loss table

12316 `T hot must be greater than T cold`

A spot T hot has been specified which is not greater than T cold.

12603 `Illegal MSDOS name given`

An invalid filename has been specified. Use filenames with a maximum of 8 characters (letters and digits only) and use a 3 character extension. Note that lowercase and uppercase are perceived as the same.

12604 `File already exists`

Attempt to store a file that already exists. Delete or rename the old file and try again

12605 `Media is protected`

A store was attempted to a write-protected device.

12606 `Media is not writable`

A store was attempted to a read-only device.

12612 `File does not exist`

The file you were trying to recall could not be found.

12762 `Incorrect filename, allowable extension CSV`

Attempt to load/store table data with an incorrect extension.

12768 `Failed to load ENR data`

A problem occurred when trying to load or store table data.

12769 `Failed to store ENR data`

A problem occurred when trying to load or store table data.

12770 `Incorrect filename, allowable extension ENR`

Attempt to load/store table data with an incorrect extension.

12771 `Failed to load Frequency List`

A problem occurred when trying to load or store table data.

12772 `Failed to store Frequency List`

Attempt to load/store table data with an incorrect extension.

12773 `Incorrect filename, allowable extension LST`

Attempt to load/store table data with an incorrect extension.

12774 `Failed to load Limit line`

ManualsPlus.com

Attempt to load/store table data with an incorrect extension.

12775 `Failed to store Limit line`

Attempt to load/store table data with an incorrect extension.

12776 `Incorrect filename, allowable extensions LIM`

Attempt to load/store table data with an incorrect extension.

12778 `Failed to store Trace`

A problem occurred when trying to load or store table data.

12779 `Failed to load Loss data`

A problem occurred when trying to load or store table data.

12780 `Failed to store Loss data`

A problem occurred when trying to load or store table data.

12781 `Incorrect filename, allowable extension LOS`

Attempt to load/store table data with an incorrect extension.

12995 Noise Figure DLP requires Noise Source Control Hardware

You have attempted to initiate the Noise Figure mode with the Noise Source Control hardware installed in your instrument. You must install the Noise Source Control hardware before running the Noise Figure mode.

13001 to 13100: 1xEV-DO Error Messages (Option 204) An error number in this range indicates the instrument has detected an error relating to the 1xEV personality.

13024 `Signal too noisy`

13026 `Input power too low`

The instrument only identifies a channel as active if it meets the default threshold criteria that it is within 20 dB of the highest power code channel. The threshold can be changed using the Active Set Threshold function in the Meas Setup menu.

13070 `Cannot correlate to input signal`

Cannot correlate to the input signal and no active channel is found. (from composite EVM measurement) An active channel must meet the default threshold criteria that it is within 20 dB of the highest power code channel. The threshold can be changed using the active set threshold function in the Meas Setup menu.

13074 `Valid 1xEV burst not found`

In a 1xEV measurement, data was acquired but a 1xEV burst was not found, with the timeslot mode disabled.

ManualsPlus.com

13101 to 13200: Flexible Digital Modulation Analysis Error Messages (Option 241) An error number in this range indicates the instrument has detected an error relating to the Flexible Digital Modulation Analysis personality.

13102 Valid signal not found

The input signal cannot be demodulated because of inappropriate parameter settings or incorrect signal

13104 Valid burst not found

The burst signal cannot be detected because of inappropriate parameter settings or incorrect signal.

13106 Sync word not found

The sync word cannot be detected because of inappropriate parameter settings or incorrect signal.

13108 Points/Symbol changed to an even number because of demod format

Offset QPSK allows only even values for points/symbol. The user changed the demod format to OQPSK while the points/symbol was set to an odd value. Therefore, the points/symbol was re-set to an even number.

13110 Sync Pattern includes non-hex characters

The sync pattern should only consist of hex characters. Invalid characters are converted to 0.

13112 Sync Word Length changed to new upper limit

The upper limit of Sync word bits is 128. If the code word length (sync word length) exceeds this value, then the sync word length is cut off. This warning may happen only when the demod format is changed.

13114 Sync offset value not valid

The sync offset value is too far off from a value that would be reasonable to measure valid portion of data. So the measurement gives up trying to apply the offset value.

13116 Search Length is shortened because of high IF Band Width

The upper limit of the search length is 50 ms when the IF bandwidth is > 6.7 MHz, and it is 100 ms when IF BW is < 6.7 MHz.

Instrument Messages Without Numbers

Error Messages Without Numbers

Error `Attempt to change signal data failed.`

EMC message, NOT USED

ManualsPlus.com

Error `Awaiting valid signal.`

This indicates that software enhanced triggering is ON and 5 successive failures have been detected within a demod measurement

Error `Signal frequency malformed. Signal not added.`

Error `Unable to retrieve signal (remote).`

EMC message NOT USED

Error `Unable to uninstall personality, file not deletable.`

This message occurs when you try to delete a personality which has been marked as non-deletable. The personality is marked non-deletable at the factory. Get in touch with your nearest service center for further assistance.

Informational Messages

These messages simply provide information; you are not required to do anything. Information in brackets (such as <directoryname>), is a previously-provided input.

Informational messages appear at the bottom of the screen in the status line.

Informational `<directoryname> directory deleted`

The directory indicated has been successfully deleted.

Informational `<directoryname> directory deleted`

The directory indicated has been successfully deleted.

Informational `<name1> <directoryname1> directory renamed to <name2> <directoryname2>`

Directory name1 has been successfully renamed to directory name2.

Informational `<filename> file copied`

The filename indicated has been successfully copied.

Informational `<filename> file deleted`

The filename indicated has been successfully deleted.

Informational `<filename> file loaded`

The filename indicated has been successfully loaded.

Informational `<filename> file saved`

The filename indicated has been successfully saved.

Informational `<filename> too many data entries`

This message may appear when loading data from a limit line or ampcor disk file. The [DATA] section of such a file can contain at most 200 lines of data. This message is displayed if that limit is exceeded.

ManualsPlus.com

Informational `<name1> <filename1> file renamed to <name2> <filename2>`

File name1 has been successfully renamed to file name2.

Informational `Atten auto set to 15 dB`

Indicates that an input signal has been detected which is of sufficient level to damage the input circuitry and the input attenuator has been automatically set to 15 dB. If the signal level is reduced, the attenuator will stay at 15 dB. This overload protection occurs at an input power level of 13 dBm (68 dBmV for Option 1DP) ± 7 dB when the input attenuation is auto coupled and set to <15 dB. To return to the original measurement setup, reduce the input signal level and press **Amplitude**. Then press **Attenuation (Auto)**.

Overload protection is only available in the Agilent Technologies E4401B and E4411B.

Informational `Auto ranging...`

Displayed during autoranging.

Informational `B7D and/or B7E not found. Code Domain not available.`

Digital Signal Processing and Fast Analog to Digital Converter (Option B7D) and/or RF Communications Hardware (Option B7E) are not installed options on your analyzer. Code domain is therefore not available.

Informational `B7D and/or B7E not found. Mod Acc not available.`

Digital Signal Processing and Fast Analog to Digital Converter (B7D) and/or RF Communications Hardware (B7E) are not installed options on your analyzer. Modulation accuracy is therefore not available.

Informational `Carrier Not Present.`

A carrier signal/burst is expected at the analyzer input. This signal cannot be found; however, the measurement will still run. Check input signal connection.

Informational `Channel frequency outside device's transmit band.`

Reset channel number or frequency.

Informational `Default spur table values loaded.`

No spur table has been previously saved when the Out-of-Band Spurious measurement begins. Press **Meas Setup, Edit Table** to enter the frequency ranges of interest and press **Save Table** to save that information. This saved table will be loaded the next time the measurement is run.

ManualsPlus.com

Informational `Device = Mobile. Code Domain not available.`

Code Domain measurement is grayed out when the device is set to mobile under the **Mode Setup** front-panel key. Code Domain measurement is only accessible when the device is set to base and RF Communications Hardware (Option B7E) or Enhanced Memory Upgrade (Option B72) are installed.

Informational `Directory already exists`

Each directory and file must have a unique name. The directory name you have entered is currently being used on the selected drive. You may either enter a new name or rename the directory currently existent.

Informational `Device = Mobile. Mod Acc not available.`

Modulation accuracy measurement is grayed out when the device is set to mobile under **Mode Setup,** front-panel key. Modulation accuracy is only accessible when the device is set to base and RF Communications Hardware (Option B7E) or Enhanced Memory Upgrade (Option B72) are installed.

Informational `Directory already exists`

Each directory and file must have a unique name. The directory name you have entered is currently being used on the selected drive. You may either enter a new name or rename the directory currently existent. Refer to “File Menu Functions” in the Agilent *ESA Spectrum Analyzer User’s Guide*.

Informational `ENR table will be extrapolated`

One or more calibration or measurement frequency points exceeds the currently loaded Cal or Meas ENR Table frequency ranges. The corresponding ENR tables lowest frequency ENR value will be re-used for frequencies less than the table range, and the highest frequency ENR value will be re-used for frequencies greater than the table range.

Informational `Entire trace is below the threshold level.`

The measurement cannot operate properly because the trace has fallen completely below the threshold level. Change the threshold level to view signal.

Informational `Invalid format: CSV files are not supported by this measurement.`

When utilizing the Phase Noise Personality: Option 226, the *.CSV file format is not available.

Informational `Invalid EDGE burst timing.`

The burst has manually been positioned off the display.

ManualsPlus.com

Informational `Measurement halted. Press a measurement key to continue.`

This error occurs after you choose **Cancel** to refrain from setting the attenuator to 0 dB during the Receive Channel Power and Receive Spur measurements.

Informational `No Fast ADC hardware installed. Meas unavailable.`

The analyzer cannot use sweep times of less than 5 milliseconds when Option B7D or Option AYX is not installed. Therefore the measurement will not be executed.

Informational `Not enough frequency range to measure harmonics for channel.`

Selected harmonics are above the frequency range of the analyzer.

THIS MESSAGE IS NO LONGER USED FOR FW A.08.00 AND ABOVE.

Informational `One or more harmonics beyond freq limit: number decreased.`

The highest harmonic was beyond the frequency limit of the analyzer, so the number of measured harmonics was decreased.

Informational `Option activated`

This message is displayed after entering the selected option's License Key.

Informational `Please set RF input range (INPUT menu) to manual first.`

In order to manually set the reference level and/or the attenuation under the **Amplitude** front-panel key, the RF Input Range menu under the **Input** front-panel key must be set to **Man** (manual).

Informational `Shutdown in process.`

The analyzer is responding to the **Standby** key selection, and is executing the shutdown procedure.

Informational `Table loaded successfully.`

When the **Load Table** key was pressed on the second page of the edit table form while in the out-of-band spurious measurement, the file was present. The information has been loaded into the measurement where it may be edited again. This message will also appear when the out-of-band spurious measurement is opened if a spur table has been previously saved.

Informational `Table saved successfully.`

This message appears after you press the **Save Table** key on the second page of the edit table for the out-of-band spurious measurement. It indicates that the current spur table has been written successfully to disk and is available to be loaded by means of the **Load Table** key.

Informational `The calibration data is invalid, and has been cleared.`

A parameter has changed that affects calibration. Therefore the calibration data has been reset, and for best results recalibration is recommended.

ManualsPlus.com

Informational `The file containing the list of cable types has been updated.`

The file update was successful.

Informational `This measurement does not support the *.CSV file format.`

When utilizing the Phase Noise Personality: Option 226, *.CSV (comma separated values) file format is not available.

Informational `This operation requires a measurement to be active.`

The analyzer cannot perform this operation, because it requires a measurement to be running and no measurement is running.

Informational `Tracking Peak Needed.`

This message is displayed when there has been a change in Resolution Bandwidth, Span, or Alignment since the previous Tracking Peak.

The message does not apply to the E4401B or E4411B Spectrum Analyzer.

Informational `Use trigger delay to align bit p0 center on marker.`

Tells you where to manually align P0.

Informational `WARNING: You are about to delete all of the contents of directory xxxxxx “x:\xxxxx\”. Press Delete Now again to proceed or any other key to abort.`

If you select a directory or subdirectory to delete, this popup message is displayed when you press **Delete Now**. (xxxxxx “x:\xxxxx\” in the message is the full path and directory name).

Informational Waiting for end of data acquisition to access floppy disk

Informational `Volume <name> formatted`

The indicated disk has been successfully formatted.

Status Messages

These messages indicate conditions that can cause the display of incorrect data. The name of the corresponding status bit appears in parenthesis. Some messages display *only* the status bit (as noted).

Status messages appear in the upper right portion of the screen grid.

Status `* (Invalid Data)`

Data on the screen may not match the screen annotation. For example, while analyzer settings are changing or when any trace is in view mode.

Status `50 MHz Osc Unlevel (50 MHz Osc Unleveled)`

The internal 50 MHz amplitude reference source has become unleveled. This condition must be corrected before a valid alignment can be performed.

ManualsPlus.com

Status `(ADC Align Failure)` *status bit only, no message*

The alignment routine was unable to align the analog-to-digital converter (ADC).

Status `Align Now All Needed (Align Needed)`

The instrument requires complete alignment. Press **System**, **Alignments**, **Align Now**, **All**. On all Agilent Technologies ESA spectrum analyzer models except Agilent Technologies E4401B and E4411B, you must connect the **AMPTD REF OUT** to the **INPUT** with the appropriate cable to perform this alignment. *For Agilent Technologies E4401B and E4411B only:* disconnect any signals from the **INPUT** prior to performing this procedure. If this message recurs, load defaults (**System**, **Alignments**, **Load Defaults**) and then perform **Alignment Now, All**.

Status `Align Now RF Needed (Align Now RF Needed)`

The instrument requires RF alignment. Press **System**, **Alignments**, **Align Now**, **RF (EXT Cable)**. On all Agilent Technologies ESA spectrum analyzer models except Agilent Technologies E4401B and E4411B, you must connect the **AMPTD REF OUT** to the **INPUT** with the appropriate cable to perform this alignment. *For Agilent Technologies E4401B and E4411B only:* disconnect any signals from the **INPUT** prior to performing this procedure.

Status `Align RF Skipped (Align RF Skipped)`

The RF alignment has been skipped because a 50 MHz signal was detected at the INPUT; alignment will resume when the 50 MHz signal is removed. The alignment will not work when there is too much input power at 50 MHz. The instrument may not continue to measure properly. To remove the message, remove the 50 MHz input signal, then perform an **Align Now**, **RF**. Press **System**, **Alignments**, **Align Now**, **RF**. On all Agilent Technologies ESA spectrum analyzer models except E4401B and E4411B, you must connect the **AMPTD REF OUT** to the **INPUT** with the appropriate cable to perform this alignment. *For Agilent Technologies E4401B and E4411B only:* disconnect any signals from the **INPUT** prior to performing this procedure.

If this message occurs and you are going to make a measurement near 50 MHz, select **System**, **Alignments**, **Auto Align**, and **All but RF**.

Status `Align RF Skipped, Align signal amplitude too low`

The RF alignment has been skipped because the calibration output power is too low.

ManualsPlus.com

Status `DC Coupled`

Indicates the input of the analyzer is DC coupled (**Input/Output**, **Coupling (DC)**). This setting is necessary when measuring frequencies below 100 kHz on E4402B with Option UKB, E4404B, and E4405B analyzers. For E4407B analyzers with Option UKB, you must set the coupling to DC when measuring below 10 MHz. Take care to limit the input level to 0 Vdc and +30 dBm whenever you are in DC coupled mode.

Status `Demod ON: reduce span for audible detection`

When the Demod function is active and the speaker is turned on, the ratio of the resolution bandwidth to span must be greater than 0.002 to properly demodulate and listen to the resulting audio signal. You must decrease the span to continue the measurement

Status `Ext Ref` (*no corresponding status bit*)

The instrument's frequency reference has been set to **External Reference**. This message will appear even if an external reference is not connected to the instrument. The external reference frequency must also be entered.

Indicates that the frequency reference is being supplied by an external 10 MHz source.

Status `External LO frequency out of range`

One or more external LO frequencies are out of range. Check that the LO frequency limits are set correctly and check the entered measurement frequencies and measurement mode.

Status `Final IF Overload (IF/ADC Overrange)`

The final IF section has been overloaded. Measurement results may be invalid. Either increase the input attenuation or decrease the input signal level.

Status `First IF Overload (IF/ADC Overrange)`

The first IF section has been overloaded. Measurement results may be invalid. Either increase the input attenuation or decrease the input level.

Status `Flat corr off (no corresponding status bit)`

Indicates that the flatness corrections have been turned off.

Status `(FM Demod Align Failure)` *status bit only, no message*

A failure has occurred during the FM Demod alignment. Measurement results may be invalid.

Status `Freq corr off (no corresponding status bit)`

Indicates that the frequency corrections have been manually disabled. Press **System**, **Alignments**, **Freq Correct**, **(On)** to restore.

ManualsPlus.com

Status `Freq Count: Reduce Span/RBW ratio`

The span is too wide for the current resolution bandwidth. Either reduce the span or increase the RBW.

Status `Freq outside cal range`

The existing user cal has been invalidated because the current measurement frequencies lie partially or wholly outside the range of frequencies used for user-cal.

Status `Frequency Reference Error (Freq Ref Unlocked)`

The frequency reference lock loop has unlocked or is near an unlock condition. This message can occur when either the internal or external reference is selected. If external reference is selected, assure the frequency of the external reference source exactly matches the user entered value displayed on the reference menu key.

The frequency reference has been tuned too far off of 10 MHz. This condition may be corrected by cycling power on the analyzer.

Status `(IF Align Failure)` *status bit only, no message*

A failure has occurred during the IF alignment. Measurement results may be invalid.

Status `IF Gain fixed`

The autoranging function of the analyzer has been turned off (**Amplitude**, **More**, **More**, **IF Gain (Fixed)**). This setting is useful when measuring signals that require fast measurement time, narrow resolution bandwidths (< 1 kHz), and < 70 dB of display range. For more information on this setting, refer to IF Gain key description in the *ESA Spectrum Analyzer User's Guide*.

Status `IF Overload (IF/ADC Over Range)`

The IF section has been overloaded. Measurement results may be invalid.

Status `Input is internal (no corresponding status bit)`

This message applies to the Agilent Technologies E4401B and E4411B only. Indicates the **50 MHz Amptd Ref** selection is **On**. With the 50 MHz amplitude reference on, the input is routed through an internal signal path.

Status `LO – Stop freq must be >= min system input freq`

The current measurement mode requires that the stop RF (input to DUT) frequency must be more than the minimum system input frequency away from the fixed LO frequency.

Status `(LO Align Failure) status bit only, no message`

A failure has occurred during the alignment of the local oscillator (LO). Measurement results may be invalid.

ManualsPlus.com

Status `LO Out Unlevel (LO Out Unleveled)`

Indicates the output of the local oscillator (LO) has become unleveled. This condition must be corrected to make valid measurements.

Status `LO Unlevel (LO Unleveled)`

Indicates the internal circuitry of the local oscillator (LO) has become unleveled. This condition must be corrected to make valid measurements.

Status `LO Unlock (Synth Unlocked)`

Indicates the phase locked circuitry of the local oscillator (LO) has become unlocked. This condition must be corrected to make valid measurements.

Status `Log Corr Off (no corresponding status bit)`

The log amplifier corrections have been turned off.

Status `Marker Count:Widen Res BW`

The ratio of the resolution bandwidth to span must be greater than 0.002 for the marker count function to work properly. Increase the resolution bandwidth or decrease the span to continue the measurement.

Status `Meas Uncal (Oversweep)`

The measurement is uncalibrated, usually due to sweeping a narrow RBW filter too quickly. Check the sweep time, span, and bandwidth settings, or press **Auto Couple**.

Status `Measurement outside Internal Preamp range`

The Internal Preamp is currently turned on, but the measurement is being performed outside the range of the preamp.

Status `Measurement partially outside Internal Preamp range`

The Internal Preamp is currently turned on, and the measurement range is being performed partly within and partly outside this range. Recommendation is that the user turns preamp off to ensure consistent results across the entire measurement.

Status `Overload: Reduce Signal and press <ESC> (Input Overload Tripped)`

This message applies to the Agilent Technologies E4401B and E4411B only. A signal has been applied to the input connector that caused the overload protection circuitry to engage. The input signal must be reduced. After the signal is reduced, press **ESC** to reset the overload detector so that you can continue using the analyzer.

CAUTION Exposing the analyzer to high levels of input power over a prolonged period of time can damage the internal circuitry.

ManualsPlus.com

Status `Peaking Signal (no corresponding status bit)`

The instrument is executing a tracking generator peak.

Status `Preferred resolution bandwidth not available.`

The calculated required resolution bandwidth for this measurement is not available.

Status `(RF Align Failure)` *status bit only, no message*

A failure has occurred during the alignment of the RF section. Measurement results may be invalid.

Status `Signal Ident On, Amptd Uncal (Signal Ident On)`

Indicates that the amplitude measurement could be uncalibrated because the signal identification feature is on.

Status `Signal level is low.`

Indicates the signal can be correlated, however the level is below that specified to ensure accurate measurement results.

Status Source LO Unlevel (Source LO Unleveled)

The internal circuitry of the local oscillator (LO) in the tracking generator has become unleveled. This condition must be corrected to make valid measurements.

Status `Source LO Unlock (Source Synth Unlocked)`

The phase-locked circuitry of the local oscillator (LO) in the tracking generator has become unlocked. This condition must be corrected to make valid measurements.

Status `Source Unlevel` (Source Unleveled)

Indicates the source power is set higher or lower than the analyzer can provide, the frequency span extends beyond the specified frequency range of the tracking generator, or the calibration data for the source is incorrect.

Status `Start freq must be greater than fixed LO freq`

The current measurement mode requires that the start frequency must be greater than the fixed LO frequency.

Status `Start freq must be greater than start RF freq`

The current measurement mode requires that the start IF (output to DUT) frequency must be greater than the start RF (input to DUT) frequency.

Status `Start – LO freq must be >= min system input freq`

The current measurement mode requires that the start RF (input to DUT) frequency must be more than the minimum system input frequency away from the fixed LO frequency.

ManualsPlus.com

Status `Stop freq must be less than fixed LO freq`

The current measurement mode requires that the stop frequency must be less than the fixed LO frequency.

Status `Stop freq must be less than stop RF freq`

The current measurement mode requires that the stop IF (output to DUT) frequency must be less than the stop RF (input to DUT) frequency.

Status `Stop IF freq must be less than fixed LO freq`

The current measurement mode requires that the stop IF (output to DUT) frequency must be less than the fixed LO frequency.

Status `System, Alignments, Align All Now Needed (Align Needed)`

This message occurs only when **Auto Align** is set to **Alert**.

The instrument requires an **Align All Now**. Restore the alignment by pressing **System**, **Alignments**, **Align All Now**.

Status `System input frequency out of range`

One or more system input frequencies are out of range. If using a frequency list, check that all entries are valid for current measurement mode.

Status `System Alignments, Align Now, All Required`

Internal alignment correction data has been lost. Press **System**, **Alignments**, **Align Now, All** to clear this message from the display.

Status `(TG Align Failure) status bit only, no message`

A failure has occurred during the tracking generator (TG) alignment.

Status `Video shift off (no corresponding status bit)`

Indicates the video shift has been manually disabled; this will impair readings.

Annunciator Bar Messages

Annunciator `Align`

This message appears in the left side of the annunciator bar in red. When this message appears it indicates that there is one or more condition that has affected the alignment. For the possible conditions and suggested resolutions, refer to Align Now All Needed (Align Needed) on page 87, Align Now RF Needed (Align Now RF Needed) on page 87, Align RF Skipped (Align RF Skipped) on page 87, and System Alignments, Align Now, All Required on page 92.

ManualsPlus.com

Annunciator `Ext Ref`

This message appears in the right side of the annunciator bar in green. When this message appears it indicates that there is one or more condition that affects the reference source. For the possible conditions and suggested resolutions, refer to Ext Ref on page 88.

Annunciator `FreqRefUnlock`

This message appears in the left side of the annunciator bar in red. When this message appears it indicates that there is one or more condition that results in a frequency reference error. For the possible conditions and suggested resolutions, refer to Frequency Reference Error (Freq Ref Unlocked) on page 89.

Annunciator `Overload`

This message appears in the left side of the annunciator bar in red. When this message appears it indicates that there is one or more condition that causes a system overload. For the possible conditions and suggested resolutions, refer to IF Overload on page 89 and the Status overload on page 90.

Annunciator `Uncal`

This message appears in the left side of the annunciator bar in red. When this message appears it indicates that there is one or more condition that results in uncalibrated results. For the possible conditions and suggested resolutions, refer to Meas Uncal (Oversweep) on page 90.

Annunciator `Unlevel`

This message appears in the left side of the annunciator bar in red. When this message appears it indicates that there is one or more condition that affects the leveling of an internal signal, such as the local oscillator (LO) or the tracking generator (source). For the possible conditions and suggested resolutions, refer to 50 MHz Osc Unlevel (50 MHz Osc Unleveled) on page 86, LO Out Unlevel (LO Out Unleveled) on page 90, Source LO Unlevel (Source LO Unleveled) on page 91, and Source Unlevel (Source Unleveled) on page 91.

Annunciator `Unlock`

This message appears in the left side of the annunciator bar in red. When this message appears it indicates that there is one or more condition that affects locking one or more of the local oscillators (LOs). For the possible conditions and suggested resolutions, refer to LO Unlock (Synth Unlocked) on page 90.

ManualsPlus.com

ManualsPlus.com

2 Functional Tests

ManualsPlus.com

What You Will Find in This Chapter

This chapter describes the functional tests and provides information on how to perform them.

What Are the Functional Tests?

Functional tests are tests of various instrument parameters that give a high degree of confidence that the analyzer is operating correctly. They are recommended as a check of analyzer operation for incoming inspection or after a repair. Measurement uncertainty analysis is not available for functional tests, and the analyzer is checked against limits that are wider than the published specifications. The functional tests are designed to test an analyzer operating within the temperature range defined by the analyzer specifications using a minimum set of test equipment. If a test does not pass, performance tests must be run to confirm a problem exists.

Functional Test Versus Performance Verification

Functional tests use a minimum set of test equipment to check a much smaller range of parameters (and a limited number of data points for each parameter) than do performance verification tests. Functional tests use limits that are wider than the published specifications; measurement uncertainty analysis is *not* available for functional tests.

NOTE If a functional test does not pass, you must run performance verification tests to confirm that a problem exists.

Performance verification tests span a wide range of instrument parameters and provide the highest level of confidence that the instrument conforms to published specifications. These tests can be time consuming and require extensive test equipment.

This chapter includes the following:

- Before Performing a Functional Test on page 97 (what to do first).
- Test Equipment on page 98 (a list of the equipment required for *all* of the tests).
- PSA Functional Tests (*PSA only*):
  - — Amplitude Accuracy at 50 MHz on page 102
  - — Displayed Average Noise Level (DANL) on page 107
  - — Frequency Readout Accuracy on page 109
  - — Frequency Response (Flatness) on page 111
  - — Amplitude Linearity on page 115
  - — Second Harmonic Distortion (SHD) on page 118
- ESA Functional Tests (*ESA only*):
  - — Displayed Average Noise Level on page 122

ManualsPlus.com

— Frequency Readout Accuracy on page 139
— Marker Count Accuracy on page 141
— Frequency Response (Flatness) on page 142
— Reference Level Accuracy on page 146
— Resolution Bandwidth Switching Uncertainty on page 151
— Scale Fidelity on page 154
— Second Harmonic Spurious Responses on page 157
— Tracking Generator Level Flatness: Models E4401B and E4411B, Options 1DN and 1DQ on page 160
— Tracking Generator Level Flatness: E4402B, E4403B, E4404B, E4405B, E4407B and E4408B, Option 1DN on page 163

Each functional test includes:

- Test limits (pass/fail criteria)
- A description of the test
- The equipment required for the test
- A figure showing how to connect the equipment
- Step-by-step instructions
- One or more tables in which to record the measurement results

Before Performing a Functional Test

1. Ensure that you have the proper test equipment.
2. Switch on the unit under test (UUT) and let it warm up (in accordance with warm-up requirements in the instrument specifications).
3. Allow sufficient warm-up time for the required test equipment (refer to individual instrument documentation for warm-up specifications).
4. Ensure that the analyzer's frequency reference is set to Internal:
   a. Press the **System**, **Reference** keys.
   b. If the **Freq Ref** softkey does *not* have Int underlined, press the **Freq Ref** softkey until it is underlined.
5. Following instrument warm-up, perform the auto align routine:

   Press **System**, **Alignments**, **Align All Now**.

NOTE Functional test accuracy depends on the precision of the test equipment used. Ensure that all of the test equipment is calibrated before running a functional test.

ManualsPlus.com

TEST EQUIPMENT

The table below summarizes the test equipment needed to perform all of the functional tests. Alternate equipment model numbers are given in case the recommended equipment is not available.

If neither the recommended nor the alternative test equipment are available, substitute equipment that meets or exceeds the critical specifications listed.

Analyzer	Item	Critical Specifications	Recommended Agilent Model	Alternate Agilent Model
	Adapters			
PSA ESA	3.5 mm (f) to 3.5mm (f) (connector saver for 83630B)		5061-5311	
PSA ESA	3.5 mm (f) to N (f)		1250-1745	
PSA	2.4 mm (f) to 3.5 mm (m)	E4446A, E4448A only	11901D	
PSA	BNC (f) to SMA (m)		1250-1200	
PSA	BNC (m) to SMA (f)		1250-1700	
ESA	BNC (m) to SMA (f)		1250-2015	
PSA ESA	Type N (f) to BNC (m)		1250-1534	
PSA	Type N (f) to N (f)		1250-1472	1250-0777
PSA ESA	Type N (m) to 3.5 mm (f)		1250-1744	
PSA ESA	Type N (m) to 3.5 mm (m)		1250-1743	
PSA	Type N (m) to BNC (f)		1250-1476	
ESA	Type N (m) to BNC (f)		1250-0780	
	Attenuators			
PSA	10 dB Step Attenuator	*Range*: 0 to 60 dB	355D	
PSA	20 dB Fixed Attenuator	*Accuracy*: < 0.5 dB	8491A	8491B
	Cables			
PSA ESA	APC 3.5 mm (1 meter)		8120-4921	
ESA	APC 3.5 mm	E4407B and E4408B only	11500E	
ESA	APC 3.5 mm		11500D	
ESA	Type-N, 152-cm (60-in)		11500D	
ESA	APC 3.5 mm	E4407B and E4408B only	11500E	

ManualsPlus.com

Analyzer	Item	Critical Specifications	Recommended Agilent Model	Alternate Agilent Model
PSA ESA	Cable, BNC (2 required)	120 cm (48 in.) BNC cable	10503A	
	Signal Source			
PSA	Synthesized Sweeper	*Frequency*: 10 MHz to 26.5 GHz *Harmonic level*: < –40 dBc *Amplitude range*: 10 to –20 dBm *Frequency Accuracy*: 0.02%	83630B	83640B, 83650B
PSA	Synthesized Sweeper	*Frequency*: 10 MHz to 50 GHz *Harmonic level*: < –40 dBc *Amplitude range*: 10 to –20 dBm *Frequency Accuracy*: 0.02% E4446A, E4448A only	83650B	
ESA	Synthesized Sweeper	*Frequency*: 10 MHz to 26.5 GHz *Harmonic level*: < –40 dBc *Amplitude range*: 10 to –20 dBm *Frequency Accuracy*: 0.02%	83640A/B	836XX series
	Miscellaneous Equipment			
PSA ESA	Filter, 50 MHz Low Pass	*Cutoff Frequency*: 50 MHz *Rejection at 65 MHz*: > 40 dB *Rejection at 75 MHz*: > 60 dB *Rejection at 80 MHz*: > 60 dB	0955-0306	
PSA	Power Meter	*Power Reference Accuracy*: ±1.2% Compatible with power sensor	E4418B	E4419B
ESA	Power Meter	*Power Reference Accuracy*: ±1.2% Compatible with power sensor	438A	
PSA ESA	Power Sensor	*Frequency Range*: 50 MHz to 26.5 GHz *Amplitude Range*: –25 to 10 dBm	8485A	E4413A
ESA	Power Sensor	*Frequency Range*: 100 kHz to 3.0 GHz *Amplitude Range*: –25 to 10 dBm	8485A	E4413A
PSA	Power Sensor	*Frequency Range*: 50 MHz to 50 GHz E4446A, E4448A only	8487D	
PSA ESA	Power Splitter, 3.5 mm	*Nominal Insertion Loss*: 6 dB *Tracking Between Ports*: < 0.25 dB	11667B	11667A
PSA	Power Splitter	*Frequency Range*: 50 MHz to 50 GHz *Tracking between ports*: < 0.25 dB E4446A, E4448A only	11667C	

ManualsPlus.com

Analyzer	Item	Critical Specifications	Recommended Agilent Model	Alternate Agilent Model
ESA	Power Splitter, 3.5 mm	*Nominal Insertion Loss*: 6 dB *Tracking Between Ports*: < 0.25 dB E4401B, E4402B, E4403B, E4404B, E4405B and E4411B only	11667A	
ESA	Power Splitter, 3.5 mm	*Nominal Insertion Loss*: 6 dB *Tracking Between Ports*: < 0.25 dB E4407B and E4408B only	11667B	11667A
PSA	Termination, 50Ω	Type N (m) Connector *Frequency*: 1 MHz to 4 GHz	909A Option 012	
ESA	Termination, 50Ω	Type N (m) Connector *Frequency*: 1 MHz to 4 GHz	908A	

ManualsPlus.com

3 PSA Functional Tests

ManualsPlus.com

Amplitude Accuracy at 50 MHz

Test Limits

Amplitude Accuracy should remain within ±1.0 dB of the measured source value across the range of source levels and changes in resolution bandwidth. Option 1DS (preamp option) should remain within ±1.3 dB of measured values.

Test Description

A synthesized sweeper is used as the signal source for the test. The source amplitude is varied using the signal source amplitude control. The resolution bandwidth is also varied on the spectrum analyzer. The source amplitude is measured by the power meter and spectrum analyzer at each setting, and the values compared. The difference between each pair of measurements indicates the amplitude accuracy.

Item	Critical Specifications	Recommended Agilent Model
Adapter	Type-N(m), to 3.5 mm(m)	1250-1743
Adapter	3.5 mm(f) to 3.5 mm(f)	5061-5311
Attenuator, 20 dB	*Accuracy*: < 0.5 dB	8491A
Cable	APC 3.5 mm, 1 meter	8120-4921
Power Meter	Compatible with power sensor	E4418B
Power Sensor	*Amplitude Range*: –25 dBm to 10 dBm	8485A
Power Splitter	3.5 mm 6 dB loss	11667B
Synthesized Sweeper	*Typical Temperature Stability*: 0.01 dBc/°C	83630B

ManualsPlus.com

Figure 3-1. Amplitude Accuracy Test Setup

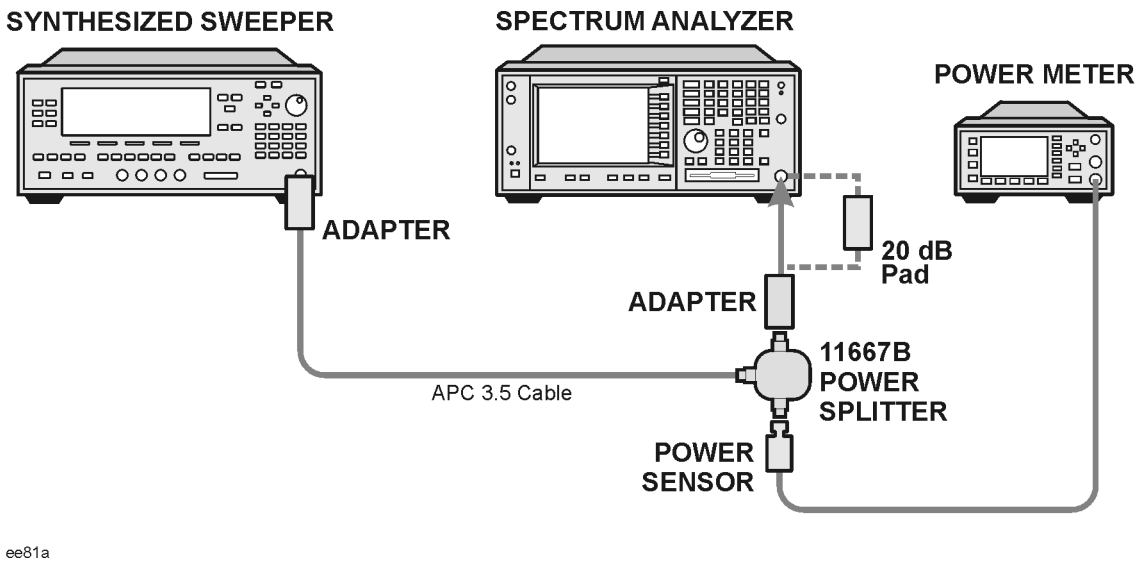

Procedure

1. Zero and calibrate the power meter.
2. Configure equipment as shown in Figure 3-1., with the power splitter connected to the spectrum analyzer input.

CAUTION To minimize stress on the test equipment connections, support the power sensor.

---

3. If the auto alignment for the analyzer has not been performed within the past 24 hours, press **System**, **Alignments**, **Align All Now** to perform the auto alignment routine.
4. Press **Preset** (Factory Preset) on the analyzer.
5. Set up the spectrum analyzer by pressing:

   Frequency, 50, **MHz**
   Span, 2, **MHz**
   Input/Output, **RF Coupling** (DC)
   Amplitude, **Attenuation**, 10, **dB**
   Sweep, **Auto Swp Time**, **Accy**

6. Set up the synthesized sweeper by pressing:

   CW, 50, **MHz**
   Power Level, -4, **dBm**
   RF (On)

ManualsPlus.com

7. On the spectrum analyzer, press:

   BW/Avg, **Average** (On)
   20, **Enter**

8. Perform the following steps for each row listed in Table 3-1:

   a. Set the synthesized sweeper amplitude to the value listed in the Nominal Source Amplitude column in Table 3-1.

   b. Set the Attenuation and Span as listed in each row of the table.

   c. Record the source amplitude, as measured by the power meter, in the Power Meter Amplitude column of Table 3-1.

   d. On the spectrum analyzer, press **Restart**, **Peak Search**.

   e. Wait for the spectrum analyzer to finish averaging.

   f. Record the signal amplitude, as measured by the analyzer in the Measured Amplitude column of Table 3-1.

   g. Calculate the signal amplitude accuracy error using the following equation, and record the results under the Amplitude Accuracy Error column:

      Amplitude Accuracy Error = Meas_amp – Power_meter

ManualsPlus.com

Figure 3-2. Amplitude Accuracy Test Setup

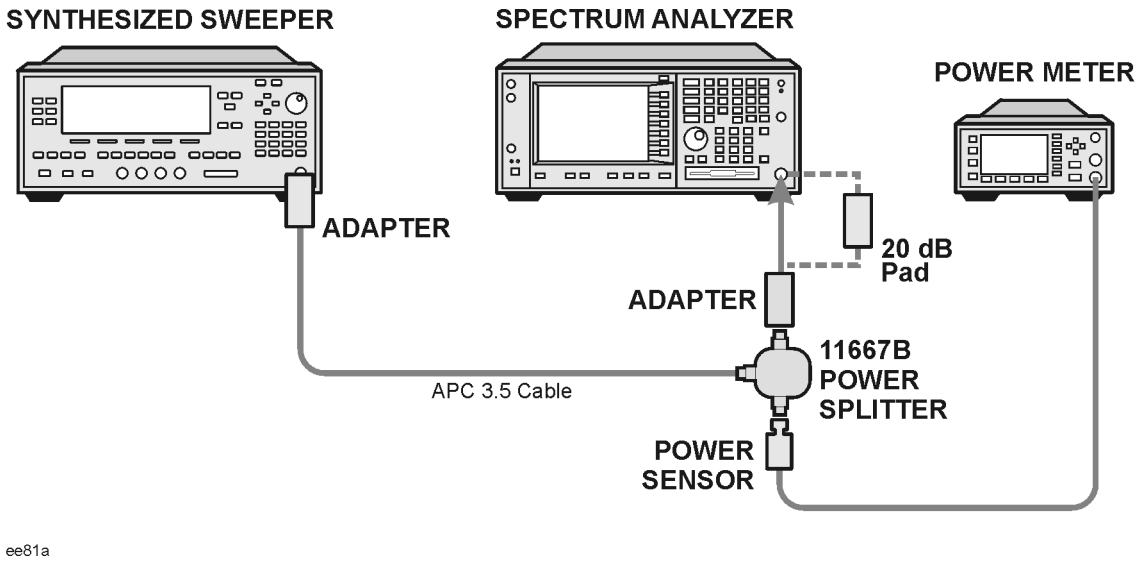

Table 3-1 Amplitude Accuracy Results

Nominal Source Amplitude (dBm)	Preamp (Option 1DS)	Attenuation (dB)	Span (MHz)	Measured Amplitude Meas_amp (dBm)	Power Meter Amplitude Power_meter (dBm)	Amplitude Accuracy Error (dB)	Test Limit (dB)
–4	Off	10	2				± 1.0
–9	Off	10	1				± 1.0
–14	Off	10	0.5				± 1.0
–4	Off	20	0.1				± 1.3
–14	Off	20	0.1				± 1.3
–4	Off	30	0.1				± 1.3
–14	Off	30	0.1				± 1.3

ManualsPlus.com

Testing Option 1DS (Preamp)

Instruments containing Option 1DS must have the preamp function turned on and tested. In order to enable this function, press **Amplitude**, **More 1 of 3**, **Int Preamp** (On).

Procedure

1. Connect the 20 dB pad between the input of the spectrum analyzer and the power splitter, as shown in Figure 3-1..
2. Set the synthesized sweeper amplitude to the value listed in the Nominal Source Amplitude column in Table 3-2.
3. Assure the spectrum analyzer input attenuation is set to 10 dB.
4. Set the Res BW and Span as listed in Table 3-2.
5. Record the source amplitude, as measured by the power meter, in the Power Meter Amplitude column of Table 3-2.
6. On the spectrum analyzer, press **Restart**, **Peak Search**.
7. Wait for the analyzer to finish averaging.
8. Record the signal amplitude as measured by the analyzer in the measured amplitude column of Table 3-2.
9. Calculate the signal amplitude accuracy using the following equation:

   Amplitude Accuracy Error = Meas_amp + 20 dB – Corrected Power Value

10. Record the results under the Amplitude Accuracy Error column of Table 3-2.

Table 3-2 Amplitude Accuracy Results (Option 1DS)

Nominal Source Amplitude (dBm)	Preamp (Option 1DS)	Res BW (kHz)	Span (kHz)	Measured Amplitude Meas_amp (dBm)	Power Meter Amplitude Power_meter (dBm)	Amplitude Accuracy Error (dB)	Test Limit (dB)
–13	On	1	106				1.2

ManualsPlus.com

Displayed Average Noise Level (DANL)

Test Limits (with 0 dB input attenuation)

See Table 3-3 for values.

Test Description

The Displayed Average Noise Level (DANL) of the spectrum analyzer is measured across a 10 kHz frequency span at several center frequencies. The analyzer input is terminated into a 50Ω load. A test is performed to assure the measurement is not performed in the presence of a residual response. The measurement is then averaged, and the result is normalized to a 1 Hz bandwidth.

Item	Critical Specifications (for this test)	Recommended Agilent Model
Termination	50Ω Type-N(m)	909A Option 012

Figure 3-3 DANL Test Setup

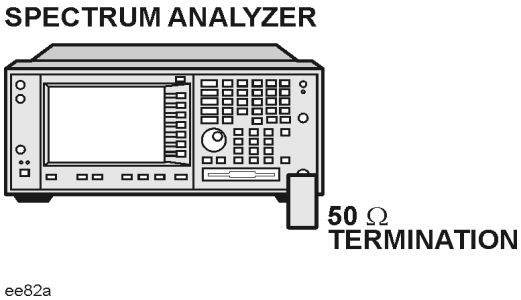

Procedure

1. Configure the equipment as shown in Figure 3-3.
2. Press **Preset** (Factory Preset) on the analyzer.
3. Set up the spectrum analyzer by pressing:

   FREQUENCY, **Center Freq**, 5. **MHz**
   Input/Output, **RF Coupling, DC**
   Span, 10 kHz
   AMPLITUDE, –70, **dBm**
   Amplitude, **Attenuation**, 0, **dB**
   BW/Avg, 1, **kHz**
   Video BW, 100 Hz
   Average (On), 20, **Enter**

ManualsPlus.com

4. Press **Display**, then press the **Display Line** key.
5. Rotate the RPG knob and set the display line at the average amplitude of the displayed noise floor by visual inspection.
6. Confirm that the measurement will be performed on the spectrum analysis noise floor and not on a residual response within the displayed 10 kHz span.

NOTE Ignore the residual response if one appears when taking the measurement.

7. Enter the value of the display line as the Measured Average Noise Level at 5 MHz column in Table 3-3.
8. Normalize the measured value to a 1 Hz BW by adding –30 dB to the measured value.

NOTE The –30 dB value is added because the formula used to calculate the value of the noise power in a 1 Hz BW when measured with a 1 kHz BW is:

Noise = 10 Log (BW 2/BW 1) where BW 2 is the 1 kHz BW we measure and BW 1 is 1 Hz BW we want to normalize to.

Therefore, 10 Log (1000) = 30 dB, so the noise floor will be 30 dB lower in a 1 Hz BW.

9. Enter the normalized value of the displayed average noise level in Table 3-3.
10. The value of the normalized displayed average noise should be less than the specification value.
11. Change the analyzer center frequency to the next value listed in Table 3-3
12. Repeat steps 4 through 10 to fill in the remainder of Table 3-3 for your analyzer frequency range.

Table 3-3 Displayed Average Noise Level (DANL) Results

Center Frequency	Measured Average Noise Level (dBm)	Normalized Average Noise Level/(1 Hz BW) (dBm)	Test Limits (dBm)
5 MHz			–140
2 GHz			–149
6 GHz			–147
13 GHz			–145
20 GHz			–142
26.5 GHz			–136
40 GHz			–124
50 GHz			–126

ManualsPlus.com

Frequency Readout Accuracy

Test Limits

Frequency Readout Accuracy is equivalent to the following equation:

± (0.25% x span + 5% X RBW + 2 Hz + 0.5 x horizontal resolution)

NOTE See results table for actual values.

Test Description

The frequency readout accuracy is measured in several spans and center frequencies that allow both internal analyzer synthesizer modes and prefilter bandwidths to be tested. Frequency reference error is eliminated by using the same frequency standard for the analyzer and signal source.

Item	Critical Specification (for this test)	Recommended Agilent Model
Adapter	Type-N(m), to 3.5 mm(f)	1250-1744
Adapter	3.5 mm(f) to 3.5 mm(f)	5061-5311
Cable	APC 3.5 mm, 1 meter	8120-4921
Cable	BNC, 120 cm	10503A
Synthesized Sweeper	*Frequency*: Capable of 2 GHz (must have external reference input)	83630B

Figure 3-4. Frequency Readout Accuracy Test Setup

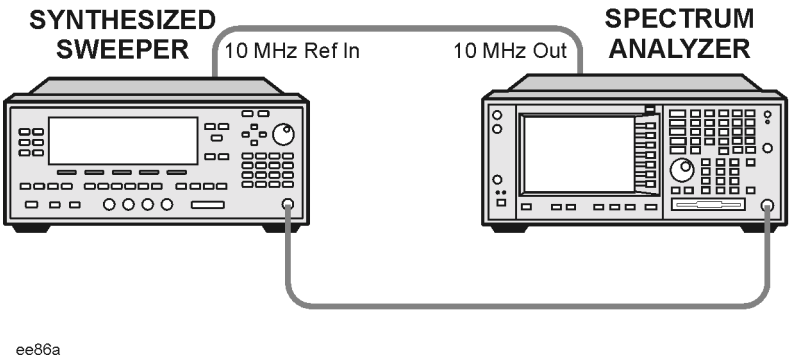

ManualsPlus.com

Procedure

1. Configure the equipment as shown in Figure 3-4.. Confirm the analyzer's built-in auto alignment has been performed within the past 24 hours.
2. Perform the following steps to set up the equipment:
   a. On the synthesized sweeper, press **PRESET**, then set the controls as follows:

      POWER LEVEL, –10, **dBm**
      CW, 1505, **MHz**, **RF** (On)

   b. On the spectrum analyzer, press **Preset**.
3. Set up the spectrum analyzer by pressing:

   System, **Reference**, 10, **MHz**, **Ext** (On)
   Frequency, 1505, **MHz**
   Det/Demod, **Detector**, **Sample**
   Span, 2990, **MHz**

NOTE Ensure Ref Level is set to 0 dBm. In addition, ensure Resolution BW and Video BW are both set to Auto.

4. Press **Peak Search** on the analyzer to measure the frequency readout accuracy. If the instrument is functioning correctly, the marker reading in the active function block will be between the values listed in Table 3-4. Record the marker value in the Marker Frequency Readout column in Table 3-4.
5. On the spectrum analyzer, change the span and center frequency as listed in Table 3-4.
6. Change the synthesized sweeper frequency to match the center frequency of the analyzer.
7. Repeat steps 4 through 6 until the Marker Frequency Readout column of Table 3-4 is complete.

Table 3-4 Frequency Readout Accuracy Results

Span (MHz)	Center Frequency (MHz)	Minimum	Marker Frequency Readout	Maximum
2990	1505	1.495 GHz		1.515 GHz
127.2	1505	1.5045 GHz		1.5055 GHz
54.1	1505	1.50480 GHz		1.50520 GHz
7.95	1505	1.504968 GHz		1.505032 GHz
0.106	1505	1.5049996 GHz		1.5050004 GHz
1.98	517.59	517.5829 MHz		517.5971 MHz
1.98	832.50	832.4928 MHz		832.5071 MHz

ManualsPlus.com

Frequency Response (Flatness)

Test Limits

Frequency Range	Limit Relative to 50 MHz
3 Hz to 3 GHz	±1.5 dB
> 3 GHz to 6.6 GHz	±2.5 dB
> 6.6 GHz to 22 Ghz	±3.0 dB
> 22 GHz to 26.5 GHz	±3.5 dB
> 26.5 GHz	±3.5 dB

Test Description

The frequency response test measures the spectrum analyzer's amplitude error as a function of the tuned frequency. Measurements are made ranging from 50 MHz to the maximum frequency range of your analyzer. The signal source amplitude is measured with a power meter to eliminate error due to source flatness. The measured value is normalized to 50 MHz.

Item	Critical Specifications (for this test)	Recommended Agilent Model
Adapter	Type N(m) to 3.5 mm(m)	1250-1743
Adapter	Type N(m) to 3.5 mm(f)	1250-1744
Adapter [a]	2.4 mm(f) to 3.5 mm(m)	11901D
Adapter	3.5 mm(f) to 3.5 mm(f)	5061-5311
Cable	3.5 mm, 1 meter	8120-4921
Cables	BNC, 120 cm (48 in.)	10503A
Power Meter	Compatible with power sensor	E4418B
Power Sensor	*Frequency Range:* 50 MHz to 26.5 GHz	8485A
Power Sensor [a]	*Frequency Range*: 50 MHz to 50 GHz	8487D
Power Splitter	*Frequency Range*: 50 MHz to 26.5 GHz *Tracking between ports*: < 0.25 dB	11667B

ManualsPlus.com

Item	Critical Specifications (for this test)	Recommended Agilent Model
Power Splitter [a]	*Frequency Range*: 50 MHz to 50 GHz *Tracking between ports*: < 0.25 dB	11667C
Synthesized Sweeper	*Frequency Range*: 50 MHz to 26 GHz	83630B
Synthesized Sweeper [a]	*Frequency Range*: 50 MHz to 50 GHz	83650B

a. Only used for higher frequency PSA models (E4446A, E4448A), but can be used for testing all PSA models.

Figure 3-5. Frequency Response Test Setup

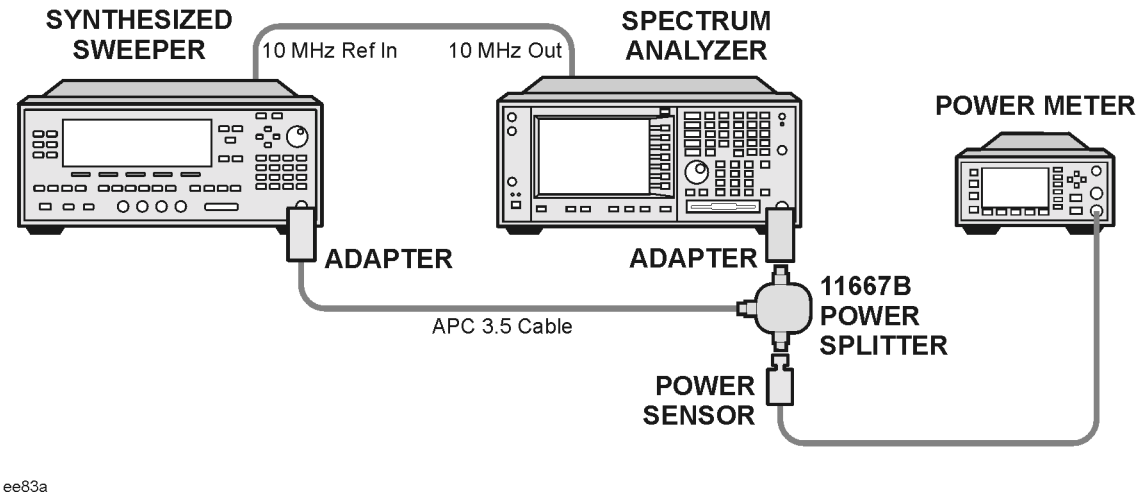

Procedure

1. Zero and calibrate the power meter and power sensor as described in the power meter operation manual.
2. Configure the equipment as shown in Figure 3-5..

NOTE Connect the power splitter to the spectrum analyzer input using the appropriate adapter. Do not use a cable.

3. Assure the spectrum analyzer's built-in auto alignment has been performed within the last 24 hours.
4. Preset (Factory Preset) both the spectrum analyzer and the synthesized sweeper.
5. Set up the synthesized sweeper by pressing:

   CW, 50, **MHz**
   Power level, –8, **dBm**

ManualsPlus.com

6. Set up the spectrum analyzer by pressing:

   Frequency, 50, **MHz**
   Span, 50, **kHz**
   Amplitude (ref level), –10, **dBm**
   BW/Avg, **Average** (On), 10, **Enter**

7. Adjust the synthesized sweeper output power for a power meter display of –14 dBm ±0.1 dB.

NOTE The power level of the synthesized sweeper remains unchanged for the duration of the test.

---

8. Press the **Peak Search** key on the signal analyzer to position the marker on the peak of the signal.
9. Refer to Table 3-5, "Frequency Response (Flatness) Results." Enter the amplitude of the signal displayed on the spectrum analyzer into the $Meas_{Amp}$ column of Table 3-5.
10. Enter the power meter reading into the $Power_{Meter}$ column of Table 3-5.
11. Tune the synthesized sweeper and spectrum analyzer to the next frequency listed in Table 3-5.
12. Enter the power sensor calibration factor into the power meter.
13. For frequencies 3 GHz and above, press **Amplitude**, then **Presel Center** to center the preselector filter for an optimum amplitude measurement.
14. Repeat steps 8-13 and complete the remainder of Table 3-5 for the frequency range of your analyzer.
15. Compute the measurement error ($Meas_{Error} = Meas_{Amp} - Power_{Meter}$).
16. Compute the flatness error normalized to 50 MHz:
    ($Meas_{Error} - Meas_{Error}$ @ 50 MHz)
17. Enter the computed flatness error value into the $Flat_{Norm}$ column of Table 3-5.
18. Compare the value of $Flat_{Norm}$ to the test limit.

ManualsPlus.com

Table 3-5 Frequency Response (Flatness) Results

Center Frequency	Analyzer Amplitude $Meas_{amp}$	Power Meter Measurement $Power_{meter}$	Meas Error $Meas_{error}$	Flatness Normalized to 50 MHz $Flat_{Norm}$	Flatness Error Test Limits (dB)
50 MHz				0	Ref
1 GHz					±1.5
2 GHz					±1.5
3 GHz					±1.5
3.5 GHz					±2.5
5 GHz					±2.5
6 GHz					±2.5
7 GHz					±3.0
10 GHz					±3.0
13 GHz					±3.0
14 GHz					±3.0
16 GHz					±3.0
22 GHz					±3.0
23 GHz					±3.5
25 GHz					±3.5
26.5 GHz					±3.5
28 GHz					±3.5
31.5 GHz					±3.5
42 GHz					±3.5
48 GHz					±3.5

ManualsPlus.com

Amplitude Linearity

Test Limits

The linearity error will be ≤ ±1.0 dB with ≤ –10 dBm at the mixer.

Test Description

This test checks the amplitude linearity of the instrument by maintaining a constant reference level and measuring signals of different amplitudes over most of the display range. This test sets the input attenuator to 10 dB and the Reference Level to 0 dBm. The external attenuator is set to 0 dB, and the amplitude of the source is adjusted to set the displayed signal at the reference level.

The instrument's internal marker is used to measure the reference amplitude. The Marker Delta function is activated and the RF input is reduced using the external precision step attenuator. Signal input levels from 0 dBm to –50 dBm are measured.

Item	Critical Specifications (for this test)	Recommended Agilent Model
Adapter	Type-N(m), to BNC(f)	1250-1476
Adapter	3.5 mm(f) to 3.5mm(f)	5061-5311
Adapter	BNC(m) to SMA(f)	1250-1700
APC 3.5 mm (1 meter)	APC 3.5 mm, 1 meter	8120-4921
Attenuator, 10 dB Step	*Range*: 0-50 dB *Frequency*: 50 MHz *Accuracy*: ±0.25 dB	355D
Cables (2 required)	BNC, 120 cm (48 in.)	10503A
Synthesized Sweeper	*Output Level Accuracy*: 0 to –15 dBm: ±1.0 dB	83630B

ManualsPlus.com

Figure 3-6. Amplitude Linearity Setup

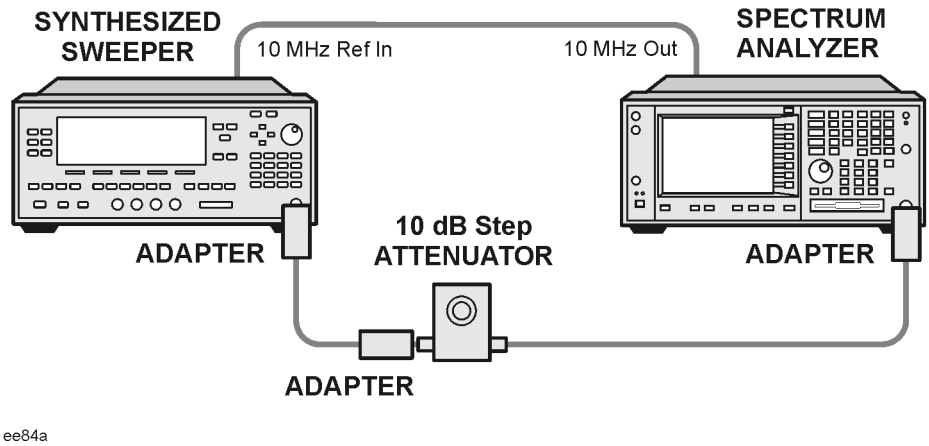

NOTE Averaging is used for all measurements to improve repeatability and reduce measurement uncertainty.

Procedure

1. Configure the equipment as shown in Figure 3-6..
2. Set up the synthesized sweeper by pressing:

   Frequency, 50, **MHz**
   Amplitude, –2, **dBm**
   RF On/Off, On

3. Set up the spectrum analyzer by pressing:

   Preset (Factory Preset)
   Frequency, 50, **MHz**
   Span, **Zero Span**

NOTE On the analyzer, ensure the reference level is 0 dBm and the attenuator is set to 10 dB.

   BW/AVG, 30, **kHz**
   Average, 10, **Enter**
   Marker (to turn on Marker function)

4. Set the external 10 dB step attenuator to 0 dB.
5. Adjust the amplitude on the signal source until the marker amplitude on the analyzer reads 0 dBm ±0.2 dB.
6. On the analyzer, press the Single key to trigger a 10 sweep average.
7. On the analyzer, activate the Marker Delta function by pressing **Marker**, **Delta**.

ManualsPlus.com

8. Perform the following steps for each attenuator setting listed in the table below:
   a. Select the next External attenuator setting.
   b. Press the **Single** key to trigger a 10 sweep average.
   c. Enter the delta marker value into Table 3-6.
   d. Check delta marker reading against the test limits.

Table 3-6 Amplitude Linearity Results

External Attenuator Setting	Minimum (dB)	Marker Delta Value (dB)	Maximum (dB)
0	N/A	Reference	N/A
10	–11.0		–9.0
20	–21.0		–19.0
30	–31.0		–29.0
40	–41.0		–39.0
50	–51.0		–49.0

ManualsPlus.com

Second Harmonic Distortion (SHD)

Test Limits

Applied Frequency	Mixer Level	Distortion
40 MHz	–20 dBm	< –55 dBc

Test Description

This test checks the second harmonic distortion of the spectrum analyzer by tuning to twice the input frequency and examining the level of the distortion product. A low pass filter is inserted between the source and the spectrum analyzer to prevent the second harmonic from artificially raising the second harmonic product displayed on the analyzer.

The power level at the input mixer is 20 dB higher than specified to allow the distortion product to be seen. For example, the instrument specification may state that with a –40 dBm signal at the input mixer, the distortion product should be suppressed by > –75 dBc.

The equivalent Second Harmonic Intercept (SHI) is 35 dBm (–40 dBm + 75 dBc). This test is performed with –20 dBm at the mixer and verifies the distortion product is suppressed by –55 dBc. This ensures the SHI is also 35 dBm (–20 dBm + 55 dBc).

Item	Critical Specifications (for this test)	Recommended Agilent Model
Adapter	Type-N(m) to BNC(f)	1250-1476
Adapter	BNC(m) to SMA(f)	1250-1700
Cable	APC 3.5 mm, 1 meter	8120-4921
Cable	BNC, 120 cm	10503A
Filter, 50 MHz Low Pass	*Cutoff Frequency*: 50 MHz *Rejection at 65 MHz*: > 40 dB *Rejection at 75 MHz*: > 60 dB	0955-0306
Synthesized Sweeper	*Frequency*: 50 MHz *Spectral Purity*: Better than –30 dBc	83630B

ManualsPlus.com

Figure 3-7. Second Harmonic Distortion Test Setup

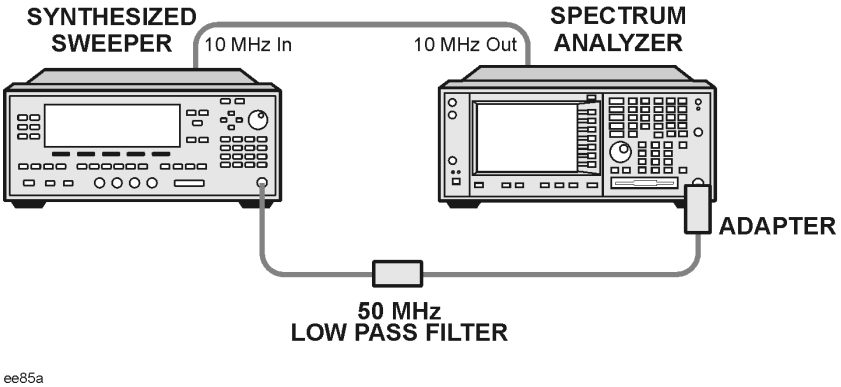

Procedure

1. Configure the equipment as shown in Figure 3-7..
2. Press **Preset** (Factory Preset) on the spectrum analyzer and the synthesized sweeper.
3. Set up the spectrum analyzer by pressing:

   Frequency, 40, **MHz**
   Amplitude, –10, **dBm**
   Span, **1 MHz**

4. Set up the synthesized sweeper by pressing:

   CW Frequency, 40, **MHz**
   Level, –10, **dBm**
   RF (On)

5. On the analyzer, press **Peak Search**.
6. Adjust the synthesized sweeper amplitude for a spectrum analyzer display of –10 dBm ±0.1 dBm.
7. On the analyzer, activate the marker delta function by pressing the **Marker** and **Delta** keys.
8. Set the analyzer Center Frequency to 80 MHz.
9. Press **BW/Avg**, **Average**, and enter the number 20, using the numeric keypad. Then, press **Enter** to begin the twenty sweep averaging routine and read the Marker Delta value. Enter the displayed value under the Measured Second Harmonic Distortion (dBc) heading in Table 3-7.

ManualsPlus.com

Table 3-7 Second Harmonic Distortion Results

Applied Frequency (MHz)	Measured Second Harmonic Distortion (dBc)	Specification (dBc)
40		<–55

ManualsPlus.com

4 ESA Functional Tests

ManualsPlus.com

Displayed Average Noise Level

Test Limits

Frequency Range	Model (50 Ω Input)	Maximum (50 Ω Input)	TR Entry
10 MHz to 500 MHz	E4401B, E4411B	– 119 dBm	1
501 MHz to 1.0 GHz	E4401B, E4411B	– 117 dBm	2
1.01 GHz to 1.5 GHz	E4401B	– 114 dBm	3
	E4411B	– 113 dBm	3
10 MHz to 1.0 GHz	E4402B, E4403B	– 117 dBm	4
	E4404B, E4405B, E4407B, E4408B	– 116 dBm	5
1.01 GHz to 2.0 GHz	E4402B, E4403B	– 116 dBm	6
	E4404B, E4405B, E4407B	– 116 dBm	7
	E4408B	– 115 dBm	8
2.01 GHz to 3.0 GHz	E4402B, E4403B	– 114 dBm	9
	E4404B, E4405B, E4407B, E4408B	– 112 dBm	10
3.01 GHz to 6.0 GHz	E4404B, E4405B, E4407B, E4408B	– 112 dBm	11
6.01 GHz to 6.7 GHz	E4404B	– 111 dBm	12
6.01 GHz to 12.0 GHz	E4405B, E4407B	– 111 dBm	13
	E4408B	– 110 dBm	14
12.01 GHz to 13.2 GHz	E4405B	– 107 dBm	15
12.01 GHz to 22 GHz	E4407B, E4408B	– 107 dBm	16
22.01 GHz to 26.5 GHz	E4407B	– 106 dBm	17
	E4408B	– 101 dBm	18

ManualsPlus.com

Frequency Range	Model (75 Ω Input)	Maximum (50 Ω Input)	TR Entry
10 MHz to 500 MHz	E4401B	– 66 dBmV	19
10 MHz to 500 MHz	E4411B	– 65 dBmV	20
501 MHz to 1.0 GHz	E4401B, E4411B	– 60 dBmV	21
1.01 GHz to 1.5 GHz	E4401B	– 56 dBmV	22
1.01 GHz to 1.5 GHz	E4411B	– 53 dBmV	23

Test Description

The Displayed Average Noise Level is measured within the frequency range specified. The analyzer input is terminated in either 50 Ω or 75 Ω, depending on analyzer options.

The test tunes the analyzer frequency across the band, uses the marker to locate the frequency with the highest response, and then reads the average noise in zero span.

Item	Critical Specifications (for this test)	Recommended Agilent Model
Adapters		
Termination, 50 Ω Type-N (m)		908A
Additional Equipment for 75 Ω Input		
Termination, 75 Ω Type-N (m)		909E
Adapter, Type-N (f), to BNC (m), 75 Ω		1250-1534

Figure 4-1 Equipment Setup

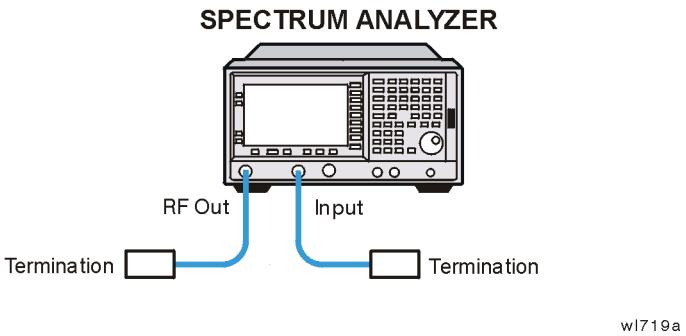

ManualsPlus.com

Procedure (10 MHz to 500 MHz) *E4401B and E4411B*

1. Connect the equipment as shown in Figure 4-1.
2. Press **System**, **Power On/Preset**, **Preset Type** (Factory), **Preset** on the analyzer. Wait for the preset routine to finish. Set the analyzer by pressing the following keys:

   FREQUENCY, **Start Freq**, 10, **MHz**
   Stop Freq, 500, **MHz**

   AMPLITUDE, –70, **dBm** (50 Ω Input only)
   AMPLITUDE, **More**, **Y Axis Units**, **dBmV** (75 Ω Input only)
   AMPLITUDE, **Ref Level**, **–21.24, dBmV** (75 Ω Input only)
   BW/Avg, **Res BW**, 1, **MHz**
   Video BW, 10, **kHz**

3. Press the following keys on the analyzer:

   Single
   BW/Avg, **Average** (On), 3, **Enter**
   Single
   Wait until **AVG 3** is displayed to the left of the graticule (the analyzer will take 3 sweeps, then stop).

4. Press **Peak Search**. Record the marker frequency next to your analyzer model in the Measured Frequency column as entry (a) or (b) in Table 4-1 on page 138 for 10 MHz to 500 MHz.
5. Press the following keys on the analyzer:

   Sweep, **Sweep** (Cont)
   BW/Avg, **Average** (Off)
   BW/Avg, **Res BW** (Auto)
   Video BW (Auto)
   SPAN, 50, **kHz**
   FREQUENCY

6. Press **Center Freq**, and set the center frequency of the analyzer to the frequency recorded in the Measured Frequency column as entry (a) or (b) of Table 4-1 on page 138 for 10 MHz to 500 MHz.
7. Press the following keys on the analyzer:

   BW/Avg, **Res BW**, 1, **kHz**
   Video BW, 30, **Hz**
   Single

   Wait for the sweep to finish.

8. Press the following keys on the analyzer:

   Display, **Display Line** (On)

   Adjust the display so that it is centered on the average trace noise, ignoring any residual responses.

ManualsPlus.com

9. Record the display line amplitude setting as TR Entry 1 (TR Entry 19 or 20 for a 75 Ω Input) in Table 4-1 on page 138. The Average Noise Level should be less than the Maximum for the appropriate input impedance.

Procedure (501 MHz to 1.0 GHz) *E4401B and E4411B*

1. Press the following keys on the analyzer:

   Sweep, **Sweep** (Cont)
   FREQUENCY, **Start Freq**, 501, **MHz**
   Stop Freq, 1.0, **GHz**
   BW/Avg, **Res BW**, 1, **MHz**
   Video BW, 10, **kHz**

2. Press the following keys on the analyzer:

   Single
   BW/Avg, **Average** (On), 3, **Enter**
   Single

   Wait until **AVG 3** is displayed to the left of the graticule (the analyzer will take 3 sweeps, then stop).

3. Press **Peak Search**, and record the marker frequency next to your analyzer model in the Measured Frequency column as entry (c) in Table 4-1 on page 138 for 501 MHz to 1.0 GHz.

4. Press the following keys on the analyzer:

   Sweep, **Sweep** (Cont)
   BW/Avg, **Average** (Off)
   BW/Avg, **Res BW** (Auto)
   Video **BW** (Auto)
   SPAN, 50, **kHz**
   FREQUENCY

5. Press **Center Freq**. Set the center frequency of the analyzer to the frequency recorded in the Measured Frequency column as entry (c) in Table 4-1 on page 138 for 501 MHz to 1.0 GHz.

6. Press the following keys on the analyzer:

   BW/Avg, **Res BW**, 1, **kHz**
   Video BW, 30, **Hz**
   Single

   Wait for the sweep to finish.

7. Press the following keys on the analyzer:

   Display, **Display Line** (On)

   Adjust the display line so that it is centered on the average trace noise, ignoring any

ManualsPlus.com

residual responses.

8. Record the display line amplitude setting as TR Entry 2 (TR Entry 21 for a 75 Ω Input) in Table 4-1 on page 138. The Average Noise Level should be less than the Maximum for the appropriate input impedance.

Procedure (1.01 GHz to 1.5 GHz) *E4401B and E4411B*

1. Press the following keys on the analyzer:

   Sweep, **Sweep** (Cont)
   FREQUENCY, **Start Freq**, 1.0 **GHz**
   Stop Freq, **1.5 GHz**
   BW/Avg, **Res BW**, 1, **MHz**
   Video BW, 10, **kHz**

2. Press the following keys on the analyzer:

   Single
   BW/Avg, **Average** (On), 3, **Enter**
   Single

   Wait until **AVG 3** is displayed to the left of the graticule (the analyzer will take 3 sweeps, then stop).

3. Press **Peak Search**, and record the marker frequency next to your analyzer model in the Measured Frequency column as entry (d) or (e) in Table 4-1 on page 138 for 1.01 GHz to 1.5 GHz.

4. Press the following keys on the analyzer:

   Sweep, **Sweep** (Cont)
   BW/Avg, **Average** (Off)
   BW/Avg, **Res BW** (Auto)
   Video **BW** (Auto)
   SPAN, 50, **kHz**
   FREQUENCY

5. Press **Center Freq**. Set the center frequency of the analyzer to the frequency recorded in the Measured Frequency column as entry (d) or (e) in Table 4-1 on page 138 for 1.01 GHz to 1.5 GHz.

6. Press the following keys on the analyzer:

   BW/Avg, **Res BW**, 1, **kHz**
   Video BW, 30, **Hz**
   Single

   Wait for the sweep to finish.

ManualsPlus.com

7. Press the following keys on the analyzer:

   Display, **Display Line** (On)

   Adjust the display line so that it is centered on the average trace noise, ignoring any residual responses.

8. Record the display line amplitude setting as TR Entry 3 (TR Entry 22 or 23 for a 75 Ω Input) in Table 4-1 on page 138. The average noise level should be less than the Maximum for the appropriate input impedance.

Procedure (10 MHz to 1 GHz) *E4402B, E4403B, E4404B, E4405B, E4407B, and E4408B*

1. Press **System**, **Power On/Preset**, **Preset Type** (Factory), **Preset** on the analyzer. Wait for the preset routine to finish. Set the analyzer by pressing the following keys:

   FREQUENCY, **Start Freq**, 10, **MHz**
   Stop Freq, 1.0, **GHz**

   AMPLITUDE, –70, **dBm**
   Attenuation (Man), 0, **dB**
   BW/Avg, **Res BW**, 1, **MHz**
   Video BW, 10, **kHz**

2. Press the following keys on the analyzer:

   Single
   BW/Avg, **Average** (On), 3, **Enter**
   Single

   Wait until **AVG 3** is displayed to the left of the graticule (the analyzer will take three sweeps, then stop).

3. Press **Peak Search**. Record the marker frequency next to your analyzer model in the Measured Frequency column as entry (f) or (g) in Table 4-1 on page 138 for 10 MHz to 1.0 GHz.

4. Press the following keys on the analyzer:

   Sweep, **Sweep** (Cont)
   BW/Avg, Average (Off)
   BW/Avg, **Res BW** (Auto)
   Video BW (Auto)
   SPAN, 50, **kHz**
   FREQUENCY

5. Press **Center Freq**. Set the center frequency of the analyzer to the frequency recorded in the Measured Frequency column as entry (f) or (g) in Table 4-1 on page 138 for 10 MHz to 1.0 GHz.

ManualsPlus.com

6. Press the following keys on the analyzer:

   BW/Avg, **Res BW**, 1, **kHz**
   Video BW, 30, **Hz**
   Single

   Wait for the sweep to finish.

7. Press the following keys on the analyzer:

   Display, **Display Line** (On)

   Adjust the display line so that it is centered on the average trace noise, ignoring any residual responses.

8. If the analyzer is an E4402B or E4403B, record the display line amplitude setting as TR Entry 4 in Table 4-1 on page 138. Otherwise, record the display line amplitude setting as TR Entry 5 in Table 4-1 on page 138. The average noise level should be less than the Maximum.

Procedure (1.01 GHz to 2 GHz) *E4402B, E4403B, E4404B, E4405B, E4407B, and E4408B*

1. Press **System**, **Power On/Preset**, **Preset Type** (Factory), **Preset** on the analyzer. Wait for the preset routine to finish. Set the analyzer by pressing the following keys:

   FREQUENCY, **Start Freq**, 1.01, **GHz**
   Stop Freq, 2, **GHz**

   AMPLITUDE, –70, **dBm**
   Attenuation (Man), 0, **dB**
   BW/Avg, **Res BW**, 1, **MHz**
   Video BW, 10, **kHz**

2. Press the following keys on the analyzer:

   Single
   BW/Avg, **Average** (On), 3, **Enter**
   Single

   Wait until **AVG 3** is displayed to the left of the graticule (the analyzer will take 3 sweeps and then stop).

3. Press **Peak Search.** Record the marker frequency next to your analyzer model in the Measured Frequency column as entry (h), (i) or (j) in Table 4-1 on page 138 for 1.01 GHz to 2 GHz.

ManualsPlus.com

4. Press the following keys on the analyzer:

   Sweep, **Sweep** (Cont)
   BW/Avg, Average (Off)
   BW/Avg, **Res BW** (Auto)
   Video BW (Auto)
   SPAN, 50, **kHz**
   FREQUENCY

5. Press **Center Freq**. Set the center frequency of the analyzer to the frequency recorded in the Measured Frequency column as entry (h), (i) or (j) in Table 4-1 on page 138 for 1.01 GHz to 2 GHz.

6. Press the following keys on the analyzer:

   BW/Avg, **Res BW**, 1, **kHz**
   Video BW, 30, **Hz**
   Single

   Wait for the sweep to finish.

7. Press the following keys on the analyzer:

   Display, **Display Line** (On)

   Adjust the display line so that it is centered on the average trace noise, ignoring any residual responses.

8. If the analyzer is an E4402B or E4403B, record the display line amplitude setting as TR Entry 6 in Table 4-1 on page 138. Otherwise, record the display line amplitude setting as TR Entry 7 or 8 in Table 4-1 on page 138. The average noise level should be less than the Maximum.

Procedure (2.01 GHz to 3.0 GHz) *E4402B, E4403B, E4404B, E4405B, E4407B, and E4408B*

1. Press **System**, **Power On/Preset**, **Preset Type** (Factory), **Preset** on the analyzer. Wait for the preset routine to finish. Set the analyzer by pressing the following keys:

   FREQUENCY, **Start Freq**, 2.01, **GHz**
   Stop Freq, 3.0, **GHz**

   AMPLITUDE, –70, **dBm**
   Attenuation (Man), 0, **dB**
   BW/Avg, **Res BW**, 1, **MHz**
   Video BW, 10, **kHz**

ManualsPlus.com

2. Press the following keys on the analyzer:

   Single
   BW/Avg, **Average** (On), 3, **Enter**
   Single

   Wait until **AVG 3** is displayed to the left of the graticule (the analyzer will take 3 sweeps and then stop).

3. Press **Peak Search**. Record the marker frequency next to your analyzer model in the Measured Frequency column as entry (k) or (l) in Table 4-1 on page 138 for 2.01 GHz to 3.0 GHz.

4. Press the following keys on the analyzer:

   Sweep, **Sweep** (Cont)
   BW/Avg, Average (Off)
   BW/Avg, **Res BW** (Auto)
   Video BW (Auto)
   SPAN, 50, **kHz**
   FREQUENCY

5. Press **Center Freq**. Set the center frequency of the analyzer to the frequency recorded in the Measured Frequency column as entry (k) or (l) in Table 4-1 on page 138 for 2.01 GHz to 3.0 GHz.

6. Press the following keys on the analyzer:

   BW/Avg, **Res BW**, 1, **kHz**
   Video BW, 30, **Hz**
   Single

   Wait for the sweep to finish.

7. Press the following keys on the analyzer:

   Display, **Display Line** (On)

   Adjust the display line so that it is centered on the average trace noise, ignoring any residual responses.

8. If the analyzer is an E4402B or E4403B, record the display line amplitude setting as TR Entry 9 in Table 4-1 on page 138 Otherwise, record the display line amplitude setting as TR Entry 10 in Table 4-1 on page 138 The Average Noise Level should be less than the maximum.

ManualsPlus.com

Procedure (3.01 GHz to 6.0 GHz) *E4404B, E4405B, E4407B, and E4408B*

1. Press **System**, **Power On/Preset**, **Preset Type** (Factory), **Preset** on the analyzer. Wait for the preset routine to finish. Set the analyzer by pressing the following keys:

   FREQUENCY, **Start Freq**, 3.01, **GHz**
   Stop Freq, 6.0. **GHz**

   AMPLITUDE, –70, **dBm**
   Attenuation (Man), 0, **dB**
   BW/Avg, **Res BW**, 1, **MHz**
   Video BW, 10, **kHz**

2. Press the following keys on the analyzer:

   Single
   BW/Avg, **Average** (On), 3, **Enter**
   Single

   Wait until **AVG 3** is displayed to the left of the graticule (the analyzer will take 3 sweeps and then stop).

3. Press **Peak Search**. Record the marker frequency next to your analyzer model in the Measured Frequency column as entry (m) in Table 4-1 on page 138 for 3.01 GHz to 6.0 GHz.

4. Press the following keys on the analyzer:

   Sweep, **Sweep** (Cont)
   BW/Avg, Average (Off)
   BW/Avg, **Res BW** (Auto)
   Video BW (Auto)
   SPAN, 50, **kHz**
   FREQUENCY

5. Press **Center Freq**. Set the center frequency of the analyzer to the frequency recorded in the Measured Frequency column as entry (m) in Table 4-1 on page 138 for 3.01 GHz to 6.0 GHz.

6. Press the following keys on the analyzer:

   BW/Avg, **Res BW**, 1, **kHz**
   Video BW, 30, **Hz**
   Single

   Wait for the sweep to finish.

7. Press the following keys on the analyzer:

   Display, **Display Line** (On)

   Adjust the display line so that it is centered on the average trace noise, ignoring any residual responses.

ManualsPlus.com

8. Record the display line amplitude setting as TR Entry 11 in Table 4-1 on page 138. The Average Noise Level should be less than the Maximum.

Procedure (6.01 GHz to 6.7 GHz) *E4404B*

1. Press **System**, **Power On/Preset**, **Preset Type** (Factory), **Preset** on the analyzer. Wait for the preset routine to finish. Set the analyzer by pressing the following keys:

   FREQUENCY, **Start Freq**, 6.01, **GHz**
   Stop Freq, 6.7, **GHz**
   AMPLITUDE, –70, **dBm**
   Attenuation (Man), 0, **dB**
   BW/Avg, **Res BW**, 1, **MHz**
   Video BW, 10, **kHz**

2. Press the following keys on the analyzer:

   Single
   BW/Avg, **Average** (On), 3, **Enter**
   Single

   Wait until **AVG 3** is displayed to the left of the graticule (the analyzer will take 3 sweeps and then stop).

3. Press **Peak Search**. Record the marker frequency next to your analyzer model in the Measured Frequency column as entry (n) in Table 4-1 on page 138 for 6.01 GHz to 6.7 GHz.

4. Press the following keys on the analyzer:

   Sweep, **Sweep** (Cont)
   BW/Avg, Average (Off)
   BW/Avg, **Res BW** (Auto)
   Video BW (Auto)
   SPAN, 50, **kHz**
   FREQUENCY

5. Press **Center Freq**. Set the center frequency of the analyzer to the frequency recorded in the Measured Frequency column as entry (n) in Table 4-1 on page 138 for 6.01 GHz to 6.7 GHz.

6. Press the following keys on the analyzer:

   BW/Avg, **Res BW**, 1, **kHz**
   Video BW, 30, **Hz**
   Single

   Wait for the sweep to finish.

ManualsPlus.com

7. Press the following keys on the analyzer:

   Display, **Display Line** (On)

   Adjust the display line so that it is centered on the average trace noise, ignoring any residual responses.

8. Record the display line amplitude setting as TR Entry 12 in Table 4-1 on page 138. The Average Noise Level should be less than the Maximum.

Procedure (6.01 GHz to 12.0 GHz) *E4405B, E4407B, and E4408B*

1. Press **System**, **Power On/Preset**, **Preset Type** (Factory), **Preset** on the analyzer. Wait for the preset routine to finish. Set the analyzer by pressing the following keys:

   FREQUENCY, **Start Freq**, 6.01, **GHz**
   Stop Freq, 12.0, **GHz**

   AMPLITUDE, –70, **dBm**
   Attenuation (Man), 0, **dB**
   BW/Avg, **Res BW**, 1, **MHz**
   Video BW, 10, **kHz**

2. Press the following keys on the analyzer:

   Single
   BW/Avg, **Average** (On), 3, **Enter**
   Single

   Wait until **AVG 3** is displayed to the left of the graticule (the analyzer will take 3 sweeps and then stop).

3. Press **Peak Search**. Record the marker frequency next to your analyzer model in the Measured Frequency column as entry (o) or (p) in Table 4-1 on page 138 for 6.01 GHz to 12.0 GHz.

4. Press the following keys on the analyzer:

   Sweep, **Sweep** (Cont)
   BW/Avg, Average (Off)
   BW/Avg, **Res BW** (Auto)
   Video BW (Auto)
   SPAN, 50, **kHz**
   FREQUENCY

5. Press **Center Freq**. Set the center frequency of the analyzer to the frequency recorded in the Measured Frequency column as entry (o) or (p) in Table 4-1 on page 138 for 6.01 GHz to 12.0 GHz.

ManualsPlus.com

6. Press the following keys on the analyzer:

   BW/Avg, **Res BW**, 1, **kHz**
   Video BW, 30, **Hz**
   Single

   Wait for the sweep to finish.

7. Press the following keys on the analyzer:

   Display, **Display Line** (On)

   Adjust the display line so that it is centered on the average trace noise, ignoring any residual responses.

8. Record the display line amplitude setting as TR Entry 13 or 14 in Table 4-1 on page 138. The average noise level should be less than the Maximum.

Procedure (12.01 GHz to 13.2 GHz) *E4405B*

1. Press **Preset System**, **Power On/Preset**, **Preset Type** (Factory), **Preset**, on the analyzer. Wait for the preset routine to finish. Set the analyzer by pressing the following keys:

   FREQUENCY, **Start Freq**, 12.01, **GHz**
   Stop Freq, 13.2, **GHz**

   AMPLITUDE, –70, **dBm**
   Attenuation (Man), 0, **dB**
   BW/Avg, **Res BW**, 1, **MHz**
   Video BW, 10, **kHz**

2. Press the following keys on the analyzer:

   Single
   BW/Avg, **Average** (On), 3, **Enter**
   Single

   Wait until **AVG 3** is displayed to the left of the graticule (the analyzer will take 3 sweeps and then stop).

3. Press **Peak Search**. Record the marker frequency next to your analyzer model in the Measured Frequency column as entry (q) in Table 4-1 on page 138 for 12.01 GHz to 13.2 GHz.

4. Press the following keys on the analyzer:

   Sweep, **Sweep** (Cont)
   BW/Avg, Average (Off)
   BW/Avg, **Res BW** (Auto)
   Video BW (Auto)
   SPAN, 50, **kHz**
   FREQUENCY

ManualsPlus.com

5. Press **Center Freq**. Set the center frequency of the analyzer to the frequency recorded in the Measured Frequency column as entry (q) in Table 4-1 on page 138 for 12.01 GHz to 13.2 GHz.

6. Press the following keys on the analyzer:

   BW/Avg, **Res BW**, 1, **kHz**
   Video BW, 30, **Hz**
   Single

   Wait for the sweep to finish.

7. Press the following keys on the analyzer:

   Display, **Display Line** (On)

   Adjust the display line so that it is centered on the average trace noise, ignoring any residual responses.

8. Record the display line amplitude setting as TR Entry 15 in Table 4-1 on page 138. The Average Noise Level should be less than the Maximum.

Procedure (12.01 GHz to 22 GHz) *E4407B and E4408B*

1. Press **System**, **Power On/Preset**, **Preset Type** (Factory), **Preset** on the analyzer. Wait for the preset routine to finish. Set the analyzer by pressing the following keys:

   FREQUENCY, **Start Freq**, 12.01, **GHz**
   Stop Freq, 22, **GHz**

   AMPLITUDE, –70, **dBm**
   Attenuation (Man), 0, **dB**
   BW/Avg, **Res BW**, 1, **MHz**
   Video BW, 10, **kHz**

2. Press the following keys on the analyzer:

   Single
   BW/Avg, **Average** (On), 3, **Enter**
   Single

   Wait until **AVG 3** is displayed to the left of the graticule (the analyzer will take 3 sweeps and then stop).

3. Press **Peak Search**. Record the marker frequency next to your analyzer model in the Measured Frequency column as entry (r) in Table 4-1 on page 138 for 12.01 GHz to 22 GHz.

ManualsPlus.com

4. Press the following keys on the analyzer:

   Sweep, **Sweep** (Cont)
   BW/Avg, Average (Off)
   BW/Avg, **Res BW** (Auto)
   Video BW (Auto)
   SPAN, 50, **kHz**
   FREQUENCY

5. Press **Center Freq**. Set the center frequency of the analyzer to the frequency recorded in the Measured Frequency column as entry (r) in Table 4-1 on page 138 for 12.01 GHz to 22 GHz.

6. Press the following keys on the analyzer:

   BW/Avg, **Res BW**, 1, **kHz**
   Video BW, 30, **Hz**
   Single

   Wait for the sweep to finish.

7. Press the following keys on the analyzer:

   Display, **Display Line** (On)

   Adjust the display line so that it is centered on the average trace noise, ignoring any residual responses.

8. Record the display line amplitude setting as TR Entry 16 in Table 4-1 on page 138. The Average Noise Level should be less than the Maximum.

Procedure (22.01 GHz to 26.5 GHz) *E4407B and E4408B*

1. Press **System**, **Power On/Preset**, **Preset Type** (Factory), **Preset** on the analyzer. Wait for the preset routine to finish. Set the analyzer by pressing the following keys:

   FREQUENCY, **Start Freq**, 22.01, **GHz**
   Stop Freq, 26.5, **GHz**

   AMPLITUDE, –70, **dBm**
   Attenuation (Man), 0, **dB**
   BW/Avg, **Res BW**, 1, **MHz**
   Video BW, 10, **kHz**

2. Press the following keys on the analyzer:

   Single
   BW/Avg, **Average** (On), 3, **Enter**
   Single

   Wait until AVG 3 is displayed to the left of the graticule (the analyzer will take 3 sweeps and then stop).

ManualsPlus.com

3. Press **Peak Search**. Record the marker frequency next to your analyzer model in the Measured Frequency column as entry (s) or (t) in Table 4-1 on page 138 for 22.01 GHz to 26.5 GHz.

4. Press the following keys on the analyzer:

   Sweep, **Sweep** (Cont)
   BW/Avg, Average (Off)
   BW/Avg, **Res BW** (Auto)
   Video BW (Auto)
   SPAN, 50, **kHz**
   FREQUENCY

5. Press **Center Freq**. Set the center frequency of the analyzer to the frequency recorded in the Measured Frequency column as entry (s) or (t) in Table 4-1 on page 138 for 22.01 GHz to 26.5 GHz.

6. Press the following keys on the analyzer:

   BW/Avg, **Res BW**, 1, **kHz**
   Video BW, 30, **Hz**
   Single

   Wait for the sweep to finish.

7. Press the following keys on the analyzer:

   Display, **Display Line** (On)

   Adjust the display line so that it is centered on the average trace noise, ignoring any residual responses.

8. Record the display line amplitude setting as TR Entry 17 or 18 in Table 4-1 on page 138. The Average Noise Level should be less than the Maximum.

ManualsPlus.com

Table 4-1 Display Average Noise Level Worksheet

Model Number	Frequency Range	Measured Frequency	Average Noise Level (TR Entry)	Maximum	
				50 Ω Input	75 Ω Input
E4401B	10 MHz to 500 MHz	(a) _____	(1) or (19) _____	– 119 dBm	– 66 dBmV
E4411B	10 MHz to 500 MHz	(b) _____	(1) or (20) _____	– 119 dBm	– 65 dBmV
E4401B, E4411B	501 MHz to 1.0 GHz	(c) _____	(2) or (21) _____	– 117 dBm	– 60 dBmV
E4401B	1.01 GHz to 1.5 GHz	(d) _____	(3) or (22) _____	– 114 dBm	– 56 dBmV
E4411B	1.01 GHz to 1.5 GHz	(e) _____	(3) or (23) _____	– 113 dBm	– 53 dBmV
E4402B, E4403B	10 MHz to 1.0 GHz	(f) _____	(4) _____	– 117 dBm	N/A
E4404B, E4405B, E4407B, E4408B	10 MHz to 1.0 GHz	(g) _____	(5) _____	– 116 dBm	N/A
E4402B, E4403B	1.01 GHz to 2.0 GHz	(h) _____	(6) _____	– 116 dBm	N/A
E4404B, E4405B, E4407B	1.01 GHz to 2.0 GHz	(i) _____	(7) _____	– 116 dBm	N/A
E4408B	1.01 GHz to 2.0 GHz	(j) _____	(8) _____	– 115 dBm	N/A
E4402B, E4403B	2.01 GHz to 3.0 GHz	(k) _____	(9) _____	– 114 dBm	N/A
E4404B, E4405B, E4407B, E4408B	2.01 GHz to 3.0 GHz	(l) _____	(10) _____	– 112 dBm	N/A
E4404B, E4405B, E4407B, E4408B	3.01 GHz to 6.0 GHz	(m)_____	(11) _____	– 112 dBm	N/A
E4404B	6.01 GHz to 6.7 GHz	(n) _____	(12) _____	– 111 dBm	N/A
E4405B, E4407B	6.01 GHz to 12.0 GHz	(o) _____	(13) _____	– 111 dBm	N/A
E4408B	6.01 GHz to 12.0 GHz	(p) _____	(14) _____	– 110 dBm	N/A
E4405B	12.01 GHz to 13.2 GHz	(q) _____	(15) _____	– 107 dBm	N/A
E4407B, E4408B	12.01 GHz to 22 GHz	(r) _____	(16) _____	– 107 dBm	N/A
E4407B	22.01 GHz to 26.5 GHz	(s) _____	(17) _____	– 106 dBm	N/A
E4408B	22.01 GHz to 26.5 GHz	(t) _____	(18) _____	– 101 dBm	N/A

ManualsPlus.com

Frequency Readout Accuracy

Test Limits

Span	Minimum)	Maximum
10 MHz	1.48988 GHz	1.49012 GHz
100 kHz	1.4899988 GHz	1.4900012 GHz
Marker Count Accuracy with Counter Resolution at 1 Hz	1.489999999 GHz	1.490000001 GHz

Test Description

The frequency readout accuracy of the analyzer is tested with an input signal of known frequency. Frequency reference error is eliminated by using the same frequency standard for the analyzer and the synthesized sweeper.

Item	Critical Specifications (for this test)	Recommended Agilent Model
Signal Sources		
Synthesized Sweeper	10 MHz to 1.5 GHz External Reference Input	8340A/B or 836XX Series
Adapters		
Type-N (f), to APC 3.5(f)		1250-1745
Cables		
Type-N, 152-cm (60-in)		11500D
BNC, 122-cm (48-in)		10503A
Additional Equipment for 75-Ohm Input		
Pad, minimum loss		11852B
Type-N (f), to BNC (m), 75 Ω		1250-1534

ManualsPlus.com

Figure 4-2 Equipment Setup

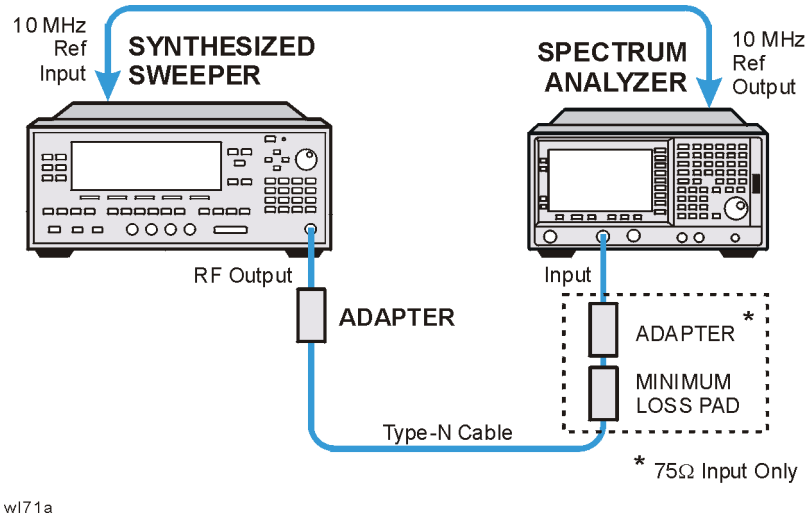

Procedure

1. Connect the equipment as shown in Figure 4-2. Remember to connect the 10 MHz REF OUT of the analyzer to the 10 MHz REF IN of the synthesized sweeper.
2. Perform the following steps to set up the equipment:
   a. Press **INSTRUMENT PRESET** on the synthesized sweeper, then set the controls to:

      CW, 1.490, **GHz**
      POWER LEVEL, 10, **– dBm**

   b. Press **System**, **Power On/Preset**, **Preset Type** (Factory), **Preset** on the analyzer, then wait for the preset routine to finish. Set the analyzer by pressing the following keys:

      Frequency, 1.490, **GHz**
      SPAN, 10, **MHz**
      BW/Avg, **Res BW**, 100, **kHz**
      Video BW, 30, **kHz**

CAUTION Use only 75 Ω cables, connectors, or adapters on analyzers with 75 Ω inputs, or damage to connectors will occur.

---

3. Press **Peak Search** on the analyzer to measure the frequency readout accuracy. Record this in the Marker Frequency Readout column in Table 4-2 on page 141.
4. Press **Span**, 100, **kHz**, **BW/Avg**, **Res BW**, 1, **kHz**, **Video BW**, 1, **kHz**.
5. Press **Peak Search** on the analyzer to measure the frequency readout accuracy. Record this in the Marker Frequency Readout column in Table 4-2 on page 141.

NOTE The Frequency Readout Accuracy in now complete. Continue with the Marker Count Accuracy functional check.

ManualsPlus.com

Marker Count Accuracy

Procedure

1. Press **System**, **Power On/Preset**, **Preset Type** (Factory), **Preset** on the analyzer, then wait for the preset routine to finish. Set the analyzer to measure the marker count accuracy by pressing the following keys:

   Frequency, 1.490, **GHz**
   SPAN, 10, **MHz**
   BW/Avg, **Res BW**, 100, **kHz**
   Freq Count, **Resolution**, 1, **Hz**

2. Press **Peak Search**, then wait for a count to be taken (it may take several seconds).
3. Record the **`Cntr1`** frequency as the Marker Frequency Readout in Table 4-2.

Table 4-2 Frequency Readout and Marker Count Accuracy Worksheet

Span	Minimum	Marker Frequency Readout	Maximum
10 MHz	1.48988 GHz		1.49012 GHz
100 kHz	1.4899988 GHz		1.4900012 GHz
Marker Count Accuracy w/Counter Resolution at 1 Hz	1.489999999 GHz		1.490000001 GHz

ManualsPlus.com

Frequency Response (Flatness)

Test Limits

ESA Model	Frequency	Minimum (dB)	Maximum (dB)
E4411B & E4401B	9 kHz to 1.5 GHz	–1.5	1.5
E4402B & E4403B	9 kHz to 3 GHz	–1.5	1.5
E4404B	9 kHz to 3 GHz	–1.5	1.5
	3.01 GHz to 6.7 GHz	–3.0	3.0
E4405B	9 kHz to 3 GHz	–1.5	1.5
	3.01 GHz to 6.7 GHz	–3.0	3.0
	6.71 GHz to 13.2 GHz	–3.5	3.5
E4407B & E4408B	9 kHz to 3 GHz	–1.5	1.5
	3.01 GHz to 6.7 GHz	–3.0	3.0
	6.71 GHz to 13.2 GHz	–3.5	3.5
	13.21 GHz to 25 GHz	–4.0	4.0
	25 GHz to 26.5 GHz	–4.5	4.5

Test Description

The output of the synthesized sweeper is fed through a power splitter to a power sensor and the analyzer. The synthesized sweeper's power level is adjusted at 50 MHz to place the displayed signal at the analyzer center horizontal graticule line. Measurements are made at various points depending on the model being tested. The signal source amplitude is measured with a power meter to eliminate errors due to source flatness. The power meter is zeroed and calibrated before starting the measurement.

Item	Critical Specifications (for this test)	Recommended Agilent Model
Signal Sources		
Synthesized Sweeper		8340A/B or 836xx Series
Adapters		
Type-N (f) to BNC (f)		1250-1474
APC 3.5 (f) to APC 3.5 (f)		5061-5311
BNC (f) to SMA (m)		1250-1237

ManualsPlus.com

Item	Critical Specifications (for this test)	Recommended Agilent Model
Type-N (m), to APC 3.5(m)		1250-1743
Cables		
(2) APC 3.5mm (36 in)	E4407B and E4408B only	8120-4921 or 11500E
BNC (m) both ends, (48 in)		10503A
Additional Equipment for 75-Ohm Input		
Pad, minimum loss		11852B
Type-N (f), to BNC (m)		1250-1534
Miscellaneous		
Power Meter		EPM-441A (E4418A)
Power Sensor, 75 Ω		8483A
Power Sensor, 50 Ω		8485A
Power Splitter		11667B

Figure 4-3 Equipment Setup

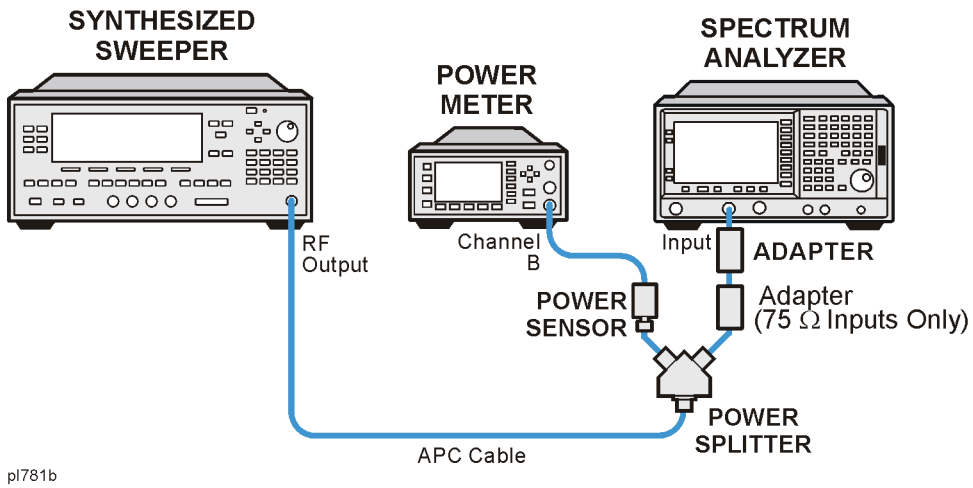

Procedure

1. Zero and calibrate the power meter and power sensor as described in the power meter operation manual.

ManualsPlus.com

2. Connect the equipment as shown in Figure 4-3.

CAUTION Use only 75 Ω cables, connectors, or adapters on analyzers with 75 Ω connectors, or damage to the connectors will occur.

3. Set the synthesized sweeper controls as follows:

   FREQUENCY, **Center Freq**, 50, **MHz**

   POWER LEVEL, –8, **dBm**

4. Press **System**, **Power On/Preset**, **Preset Type** (Factory), **Preset** on the analyzer and wait for the preset routine to finish. Set the analyzer by pressing the following keys.

   FREQUENCY, 50, **MHz**
   CF Step, 50, **MHz**
   SPAN, 20, **kHz**
   AMPLITUDE, **More**, **Y Axis Units**, **dBm**
   AMPLITUDE, –10, **dBm**
   AMPLITUDE, **Attenuation**, 10, **dB**
   Scale/Div, 2, **dB**
   BW/Avg, **Res BW**, 10, **kHz**
   Video BW, 3, **kHz**
   Peak Search
   FREQUENCY, **Signal Track** (On)

5. Adjust the synthesized sweeper power level for a marker amplitude reading of –14 dBm +/– 0.10 dB.

NOTE The power level of the synthesized sweeper remains unchanged for the duration of the test. For each new test frequency, the power sensor cal factor should be entered to minimize measurement errors.

6. Refer to Table 4-3 on page 145 Enter the marker readout amplitude for 50 MHz as displayed on the analyzer in the Analyzer Amplitude column.

7. Enter the power meter reading in the Power Meter Amplitude column.

8. Compute the flatness error at 50 MHz using the following equation and record the results in the Flatness Error column:

   Flatness Error = Analyzer Amplitude – Power Meter Amplitude

9. Perform the following steps for each center frequency setting listed in Table 4-3 on page 145.

   a. Tune the source to the next frequency listed in the Center Frequency column.

   b. Enter the power sensor cal factor for the new test frequency.

ManualsPlus.com

c. Tune the analyzer center frequency by pressing the ⇑ key or press **FREQUENCY**, **Center Freq**, “n”, and **MHz** (where “n” is the next test frequency in Table 4-3 on page 145).

d. Press **Peak Search**.

e. Enter the power meter reading in the Power Meter Amplitude column.

f. Enter the analyzer reading in the Analyzer Amplitude column.

g. Compute the flatness error using the following equation and record the results in the Flatness Error column:

Flatness Error = Analyzer Amplitude – Power Meter Amplitude

The flatness error should be less than the specified amount.

Table 4-3 Frequency Response Worksheet

Model	Center Freq	Analyzer Amplitude	Power Meter Amplitude	Flatness Error	Flatness Error Test Limits (dB)
All Models	50 MHz				± 1.5
	100 MHz				± 1.5
	750 MHz				± 1.5
	1250 MHz				± 1.5
	1500 MHz				± 1.5
E4402B – E4408B	2000 MHz				± 1.5
	2500 MHz				± 1.5
	2999 MHz				± 1.5
E4402B – E4408B	4250 MHz				± 3.0
	5750 MHz				± 3.0
	6699 MHz				± 3.0
E4402B – E4408B	8000 MHz				± 3.5
	9000 MHz				± 3.5
	10000 MHz				± 3.5
	11000 MHz				± 3.5
	13199 MHz				± 3.5
E4407B & E4408B	14000 MHz				± 4.0
	19000 MHz				± 4.0
	24000 MHz				± 4.0
	26500 MHz				± 4.5

ManualsPlus.com

Reference Level Accuracy

Test Limits

Reference Level		Minimum (dB)	Maximum (dB)
dBm	dBmV		
–30	21.76	Reference	Reference
–20	31.76	–1.40	1.40
–10	41.76	–1.40	1.40
–40	11.76	–1.40	1.40
–50	1.76	–1.40	1.40
–60	–8.24	–1.40	1.40
–70	–18.24	–2.0	2.0

Test Description

A 50 MHz CW signal is applied to the Input of the analyzer. The amplitude of the source and the analyzer's reference level are decreased in 10 dB steps. The analyzer marker functions are used to measure the amplitude difference between steps. Reference Level Accuracy is tested in both Log and Linear Scale Modes. Most of the error is contributed from the output attenuator inaccuracy in the synthesized sweeper and not the analyzer.

Item	Critical Specifications (for this test)	Recommended Agilent Model
Signal Sources		
Synthesized Sweeper	Output Level Accuracy 0 to –15 dBm: ±1.0 dB –16 dBm to –63 dBm: ±1.4 dB ≤ –64 dBm: ≥2.0 dB	8340A/B or 836XX Series
Adapters		
Type-N (m), to BNC f)		1250-1476
Cables		
Type-N, 152-cm (60-in)		11500D
BNC, 122-cm (48-in)		10503A
Additional Equipment for 75-Ohm Input		
Pad, minimum loss		11852B

ManualsPlus.com

Item	Critical Specifications (for this test)	Recommended Agilent Model
Type-N (f), to BNC (m)		1250-1534

Figure 4-4 Equipment Setup

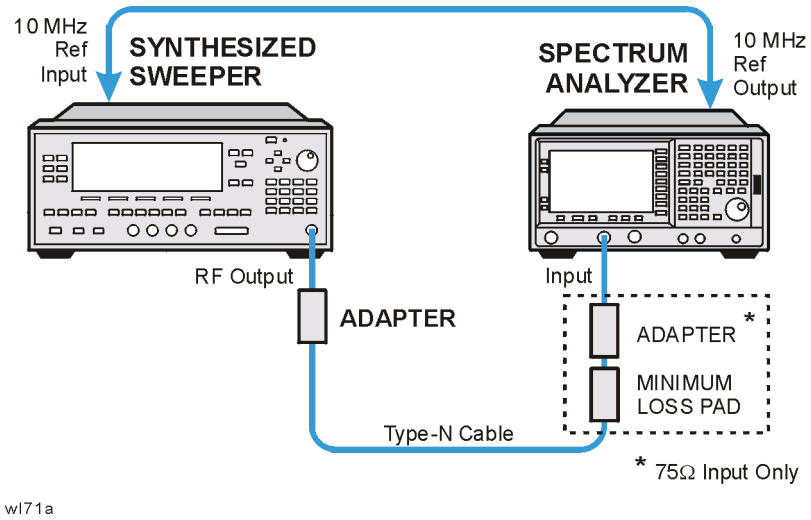

Log Mode Procedure

1. Connect the equipment as shown in Figure 4-4.
2. Press **PRESET** on the synthesized sweeper. Set the synthesized sweeper controls as follows:

   CW, 50, **MHz**
   Power Level, –30, **dBm**

3. Press **System**, **Power On/Preset**, **Preset Type** (Factory), **Preset** on the analyzer, then wait for the preset routine to finish. Press **System**, **Alignments**, **Auto Align**, **Off**. Set the analyzer by pressing the following keys:

   FREQUENCY, **Center Freq**, 50, **MHz**
   SPAN, 50, **kHz**
   AMPLITUDE, –30, **dBm** (50 Ω Input only)
   AMPLITUDE, **More**, **Y Axis Units**, **dBmV** (75 Ω Input only)
   AMPLITUDE, 21.76, **dBmV** (75 Ω Input only)
   Attenuation (Man), 5, **dB**
   BW/Avg, **Res BW**, 3, **kHz**
   Video BW, 30, **Hz**

ManualsPlus.com

4. Press **Peak Search** on the analyzer. Adjust the amplitude on the synthesized sweeper until the marker amplitude on the analyzer reads –30 dBm +/– 0.10 dB. Enter the synthesized sweeper power level as the Synthesized Sweeper Amplitude reference in Table 4-4 on page 148.

NOTE Under these analyzer conditions, the sweep time is 1.7 seconds. Therefore, the marker amplitude updates are fairly slow when adjusting the synthesizer output power.

5. Now that the reference has been established in step 4, adjust the synthesized sweeper power level and the analyzer reference level according to Table 4-4 on page 148. (The synthesized sweeper output power and the analyzer's reference level will be changed in 10 dB steps.)
6. On the analyzer, press **Single**, wait for a sweep to finish, and then press **Peak Search**, **Marker**, **Delta**.
7. For each new synthesized sweeper power level and analyzer reference level change, press the following keys on the analyzer:

   Single
   Peak Search
   Record the Analyzer Marker Amplitude reading in Table 4-4.

Table 4-4 Reference Level Accuracy Worksheet (Log Mode)

Analyzer Reference Level		Synthesized Sweeper Amplitude (dBm)	Minimum (dB)	Analyzer Marker Δ Amplitude (dB)	Maximum (dB)
dBm	dBmV				
–30	21.76	Reference = _____	0 (Reference)	0 (Reference)	0 (Reference)
–20	31.76	Reference + (10 dB)	8.60		11.40
–10	41.76	Reference + (20 dB)	18.60		21.40
–40	11.76	Reference + (–10 dB)	–11.40		–8.60
–50	1.76	Reference + (–20 dB)	–21.40		–18.60
–60	– 8.24	Reference + (–30 dB)	–31.40		–28.60
–70	–18.24	Reference + (–40 dB)	–42.0		–38.0

ManualsPlus.com

Linear Mode Procedure

1. Set the power level on the synthesized sweeper to –30 dBm by pressing **Power Level**, –30, **dBm**.
2. **Set the analyzer by pressing the following keys:**

   Sweep, **Sweep** (Cont)
   AMPLITUDE, **More**, **Y Axis Units**, **dBm** (50 Ω Input)
   AMPLITUDE, –30, **dBm** (50 Ω Input)
   AMPLITUDE, **More**, **Y Axis Units**, **dBmV** (75 Ω Input)
   AMPLITUDE, +21.76, **dBmV** (75 Ω Input)
   Scale Type (Lin)
3. Adjust the amplitude on the synthesized sweeper until the marker amplitude on the analyzer reads –30 dBm +/– 0.10 dB. Enter the synthesized sweeper power level as the Synthesized Sweeper Amplitude reference in Table 4-5 on page 150.

NOTE Under these analyzer conditions, the sweep time is 1.7 seconds. Therefore, the marker amplitude updates are fairly slow when adjusting the synthesizer output power.

---

4. Now that the reference has been established in step 4, adjust the synthesized sweeper power level and the analyzer reference level according to Table 4-5 on page 150 (The synthesized sweeper output power and the analyzer's reference level will be changed in 10 dB steps.)
5. On the analyzer, press **Single**, wait for a sweep to finish, and then press **Peak Search**, **Marker**, **Delta**.
6. For each new synthesized sweeper power level and analyzer reference level change, press the following keys on the analyzer:

   Single
   Peak Search

   Record the Analyzer Marker Amplitude reading in Table 4-5

ManualsPlus.com

Table 4-5 Reference Level Accuracy Worksheet (Linear Mode)

Analyzer Reference Level		Synthesized Sweeper Amplitude (dBm)	Minimum (dB)	Analyzer Marker Δ Amplitude (dB)	Maximum (dB)
dBm	dBmV				
–30	21.76	Reference = _____	0 (Reference)	0 (Reference)	0 (Reference)
–20	31.76	Reference + (10 dB)	8.60		11.40
–10	41.76	Reference + (20 dB)	18.60		21.40
–40	11.76	Reference + (–10 dB)	–11.40		–8.60
–50	1.76	Reference + (–20 dB)	–21.40		–18.60
–60	– 8.24	Reference + (–30 dB)	–31.40		–28.60
–70	–18.24	Reference + (–40 dB)	–42.0		–38.0

ManualsPlus.com

Resolution Bandwidth Switching Uncertainty

Test Limits

Resolution Bandwidth	Minimum (dB)	Maximum (dB)
1 kHz	0 (Ref)	0 (Ref)
3 kHz	–0.3 dB	0.3 dB
10 kHz	–0.3 dB	0.3 dB
30 kHz	–0.3 dB	0.3 dB
100 kHz	–0.3 dB	0.3 dB
300 kHz	–0.3 dB	0.3 dB
1 MHz	–0.3 dB	0.3 dB
3 MHz	–0.3 dB	0.3 dB
5 MHz	–0.6 dB	0.6 dB

Test Description

To measure the resolution-bandwidth switching uncertainty, an amplitude reference is taken with the resolution bandwidth set to 1 kHz. The resolution bandwidth is changed to settings between 5 MHz and 3 kHz and the amplitude variation is measured at each setting using the marker delta function and compared to the specification. The span is changed as necessary to maintain approximately the same aspect ratio.

No equipment required for analyzer models E4401B and E4411B.

Item	Critical Specifications (for this test)	Recommended Agilent Model
Cables		
BNC, 9 inch		10502A
Adapter		
Type N to BNC		1250-0780 or 1250-1476

ManualsPlus.com

Figure 4-5 Equipment Setup

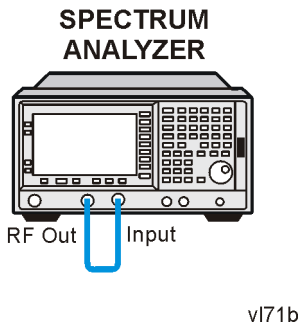

Procedure

NOTE The 50 MHz reference output will automatically be switched internally on the E4401B and E4411B and will not require any external connections. All other ESA analyzers require that the AMPTD REF OUT be connected to the INPUT to perform this test.

1. Press **System**, **Power On/Preset**, **Preset Type** (Factory), **Preset** on the analyzer. Wait for the preset routine to finish. Set the analyzer by pressing the following keys:

   Input/Output, **Amptd Ref** (On) (E4401B and E4411B)
   Input/Output, **Amptd Ref Out** (On) (E4402B, E4403B, E4404B, E4405B, E4407B, and E4408B).
   Connect a cable from the **AMPTD REF OUT** to the **INPUT 50** Ω, as shown in Figure 4-5 (E4402B, E4403B, E4404B, E4405B, E4407B, and E4408B).
   FREQUENCY, 50, **MHz**
   SPAN, 50, **kHz**
   AMPLITUDE, **More**, **Y Axis Units**, **dBm** (75 Ω Input only)
   AMPLITUDE, –20, **dBm**
   AMPLITUDE, **Scale/Div**, 1, **dB**
   BW/Avg, **Res BW**, 1, **kHz**
   Video BW, 1, **kHz**

2. Press **AMPLITUDE** and use the knob to adjust the reference level until the signal appears five divisions (mid-screen) below the reference level. Press the following keys on the analyzer:

   Peak Search
   Marker, **Delta**
   FREQUENCY, **Signal Track** (On)

3. Set the analyzer Resolution Bandwidth and Span according to Table 4-6 on page 153.

4. Press **Peak Search**, then record the Δ Mkr 1 amplitude reading in Table 4-6.

ManualsPlus.com

5. Repeat step 3 and 4 for each of the remaining resolution bandwidth and span settings listed in Table 4-6. The Δ Mkr 1 amplitude reading should be within the range indicated in the table "Test Limits" on page 151.

Table 4-6 Resolution Bandwidth Switching Uncertainty Worksheet

Resolution Bandwidth Setting	SPAN Setting	Δ Mkr 1 Amplitude Reading
1 kHz	50 kHz	0 (Ref)
3 kHz	50 kHz	
10 kHz	50 kHz	
30 kHz	500 kHz	
100 kHz	500 kHz	
300 kHz	5 MHz	
1 MHz	10 MHz	
3 MHz	10 MHz	

ManualsPlus.com

Scale Fidelity

Test Limits

dB from Reference Level	Minimum (dB)	Maximum (dB)
–4	–1.0	1.0
–16	–1.4	1.4
–28	–1.4	1.4
–40	–1.4	1.4
–52	–1.4	1.4
–64	–2.0	2.0

Test Description

A 50 MHz CW signal is applied from a synthesized sweeper to the input of the analyzer. The source is adjusted for a response at the reference level. The synthesized sweeper amplitude is adjusted to achieve a nominal amplitude below the reference level. The analyzer's amplitude marker is compared to the actual source change to determine the scale fidelity error. Most of the error is the source's output attenuator inaccuracy from the synthesized sweeper.

Item	Critical Specifications (for this test)	Recommended Agilent Model
Signal Sources		
Synthesized Sweeper	Output Level Accuracy 0 to –15 dBm: ±1.0 dB –16 dBm to –63 dBm: ±1.4 dB ≤ –64 dBm: ≥2.0 dB	8340A/B or 836XX Series
Adapters		
Type-N (m), to BNC (f)		1250-1476
Cables		
Type-N, 152-cm (60-in)		11500D
BNC, 122-cm (48-in)		10503A
Additional Equipment for 75-Ohm Input		
Pad, minimum loss		11852B
Type-N (f), to BNC (m)		1250-1534

ManualsPlus.com

Figure 4-6 Equipment Setup

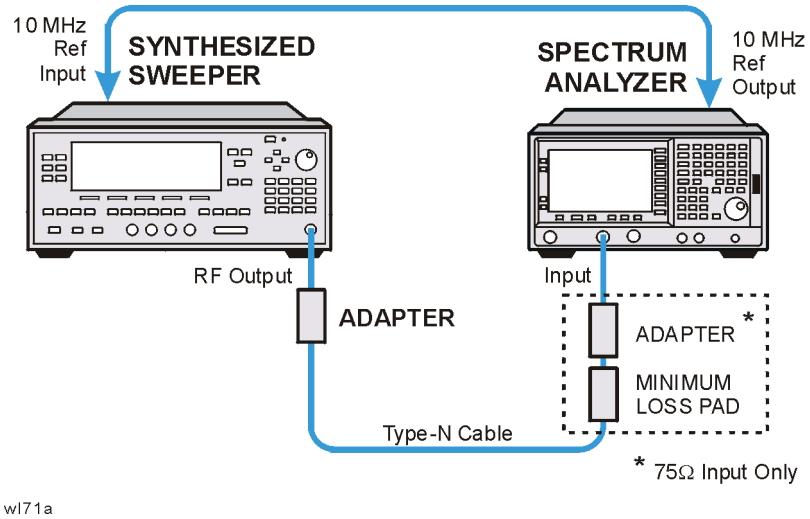

Procedure

1. Connect the equipment as shown in Figure 4-6.
2. Preset the synthesized sweeper. Set the synthesized sweeper controls as follows:

   CW, 50, **MHz**
   Power Level, 0, **dBm** (50 Ω Input)
   Power Level, 4, **dBm** (75 Ω Input)

3. Press **System**, **Power On/Preset**, **Preset Type** (Factory), **Preset** on the analyzer, then wait for the preset routine to finish. Press **System**, **Alignments**, **Auto Align**, **Off**. Set the analyzer by pressing the following keys:

   FREQUENCY, **Center Freq**, 50, **MHz**
   SPAN, 45, **kHz**
   AMPLITUDE, **Attenuation**, 10, **dB**
   BW/Avg, **Res BW**, 3, **kHz**
   Video BW, 1, **kHz**
   Peak Search

4. Adjust the amplitude on the synthesized sweeper until the marker amplitude on the analyzer reads 0 dBm +/– 0.10 dB. Record the synthesized sweeper output level as the reference in Table 4-7 on page 156.

NOTE *75 Ω Input only*. Adjust the synthesized sweeper amplitude until the analyzer's marker reads 48.8 dBmV +/– 0.10 dB.

---

5. On the analyzer, press the following keys:

   Single
   Peak Search
   Marker, **Delta**

ManualsPlus.com

6. Record the marker delta reading in Table 4-7. At each new synthesized sweeper power level, press **Single**, **Peak Search**, and record the marker amplitude level.

Table 4-7 Scale Fidelity Worksheet

Synthesized Sweeper Level	Minimum (dB)	Marker Level (dB)	Maximum (dB)
Reference=_____	0 (Reference)		0 (Reference)
Reference –4 dB	–5.0		–3.0
Reference –16 dB	–17.40		–15.60
Reference –28 dB	–29.40		–26.60
Reference –40 dB	–41.40		–38.60
Reference –52 dB	–53.40		–50.60
Reference –64 dB	–66.0		–62.0

ManualsPlus.com

Second Harmonic Spurious Responses

Test Limits

Model Number	Maximum
E4401B	–55 dBc
E4402B	–55 dBc
E4403B	–50 dBc
E4404B	–55 dBc
E4405B	–55 dBc
E4407B	–55 dBc
E4408B	–50 dBc
E4411B	–55 dBc

Test Description

To test second harmonic distortion, a 50 MHz low pass filter is used to filter the source output, ensuring that harmonics read by the analyzer are internally generated and not coming from the source. The source power and input attenuation on the analyzer are adjusted so –20 dBm is the power level at the first mixer.

Item	Critical Specifications (for this test)	Recommended Agilent Model
Signal Sources		
Synthesized Sweeper		8340A/B or 836XX Series
Miscellaneous		
50 MHz Low pass filter	Rejection at 80 MHz: >60 dB	0955-0306
Adapters		
(2) Type-N (m) to BNC (f)		1250-1476
BNC (f) to BNC (f)		1250-0080
Type-N (f), to APC 3.5(f)		1250-1745
Cables		
(2) BNC, 122-cm (48-in)		10503A

ManualsPlus.com

Item	Critical Specifications (for this test)	Recommended Agilent Model
Additional Equipment for 75 Ω Input		
Pad, minimum loss		11852B
Type-N (f), to BNC (m)		1250-1534

Figure 4-7 Equipment Setup

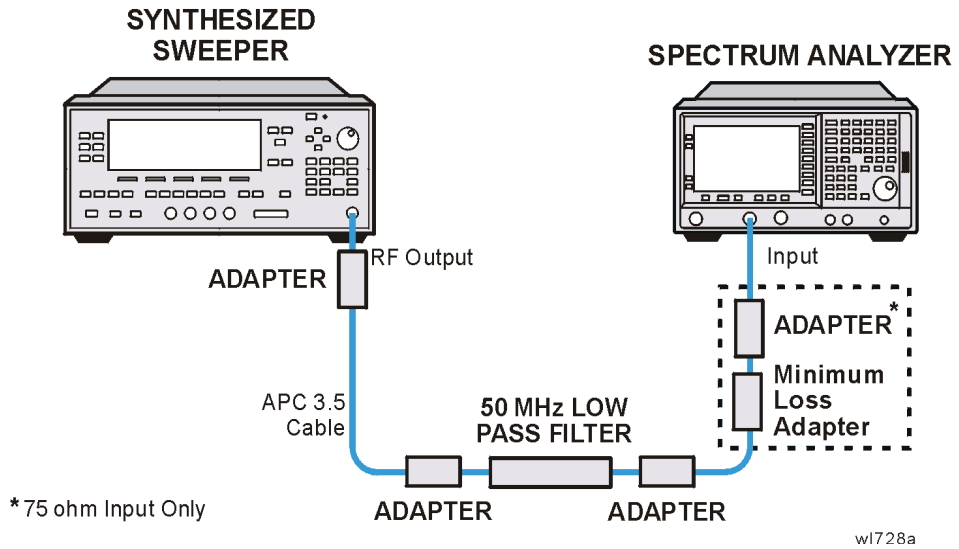

Procedure

1. Connect the equipment as shown in Figure 4-7.
2. Set the synthesized sweeper controls as follows:

   Frequency, 40, **MHz**
   POWER LEVEL, –10, **dBm** (50 Ω Input only)
   POWER LEVEL, –4.3, **dBm** (75 Ω Input only)

NOTE *75 Ω Input only*. Connect the minimum loss adapter between the low pass filter and 75 Ω Input.

ManualsPlus.com

3. Press **System**, **Power On/Preset**, **Preset Type** (Factory), **Preset** on the analyzer. Wait for the preset routine to finish.
   Set the analyzer by pressing the following keys:

   FREQUENCY, **Center Freq**, 40, **MHz**
   SPAN, 1, **MHz**
   AMPLITUDE, –10, **dBm** (50 Ω Input only)
   AMPLITUDE, 44, **dBmV** (75 Ω Input only)
   Attenuation (Man), 10, **dB**
   BW/Avg, **Res BW**, 30, **kHz**

4. Adjust the synthesized sweeper power level to place the peak of the signal at the reference level.

5. Set the analyzer by pressing the following keys:

   SPAN, 50, **kHz**
   BW/Avg, **Res BW**, 1, **kHz**
   Video BW, 100, **Hz**

6. Wait for two sweeps to finish, then press the following analyzer keys:

   Peak Search
   Mkr →
   Mkr → **CF Step**
   Marker, **Delta**
   FREQUENCY

7. Press the ⇑ key on the analyzer to step to the second harmonic (at 80 MHz). Press **Peak Search**. The marker delta amplitude reading should be less than the Maximum value listed in the Test Limits Table.

ManualsPlus.com

Tracking Generator Level Flatness: Models E4401B and E4411B, Options 1DN and 1DQ

Test Limits

	Maximum	Maximum
Flatness ≤ 10 MHz, 50 Ω	–2.5 dB	2.5 dB
Flatness > 10 MHz, 50 Ω	–2.0 dB	2.0 dB
Flatness > 10 MHz, 75 Ω	–3.0 dB	3.0 dB
Flatness > 10 MHz, 75 Ω	–2.5 dB	2.5 dB

Test Description

A calibrated power sensor is connected to the tracking generator output to measure the power level at 50 MHz. The power meter is set for REL mode so that future power level readings are in dB relative to the power level at 50 MHz. The tracking generator is then stepped to several frequencies throughout its range. The output power difference relative to the power level at 50 MHz is measured at each frequency and recorded. Analyzers with 75 Ω tracking generators are only tested from 1 MHz to 1500 MHz.

Item	Critical Specifications (for this test)	Recommended Agilent Model
Meters		
Power Meter		438A or E4418A, E4419A
RF Power Sensor	Frequency Range: 100 kHz to 1.5GHz	8482A
Cables		
BNC, 122-cm (48-in) (2)		10503A
Additional Equipment for 75 Ω Input		
75 Ω Power Sensor	Frequency Range: 1 MHz to 1.5GHz	8483A
Type-N (f) to BNC (m), 75 Ω Adapter		1250-1534

ManualsPlus.com

Figure 4-8 Equipment Setup

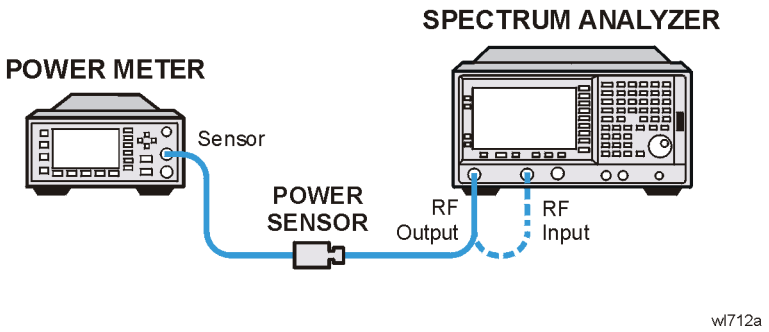

Procedure

1. Calibrate the tracking generator by pressing **System**, **Alignments**, **Align Now**, **TG**. Connect the RF Out to the Input when prompted.
2. Press **System**, **Power On/Preset**, **Preset Type** (Factory), **Preset** on the analyzer, then wait for the preset routine to finish. Set the analyzer by pressing the following keys:

   FREQUENCY, **Center Freq**, 50, **MHz**
   CF Step, 500, **MHz**
   SPAN, **Zero Span**
   Source, Amplitude (On), 0, **dBm** (50 Ω RF Output only)
   Source, **Amplitude** (On), 42.76, **dBmV** (75 Ω RF Output only)
3. Zero and calibrate the power meter and RF power sensor. Make sure the power meter is reading out in dBm. Enter the power sensor 50 MHz cal factor into the power meter.

NOTE *75 Ω RF Out only*: Zero and calibrate the 75 Ω power sensor.

4. Connect the power sensor to the RF Out on the analyzer as shown in Figure 4-8.

NOTE *75 Ω RF Out only*: Connect the 75 Ω power sensor through an adapter to the RF Out 75 Ω.

5. Press REL on the power meter. The power meter readout amplitudes are now relative to the power level at 50 MHz.
6. Set the analyzer center frequency to 100 kHz by pressing **FREQUENCY**, 100, **kHz**.

NOTE *75 Ω RF Out only*: Set the analyzer center frequency to 1 MHz.

7. Enter the appropriate power sensor Cal Factor for the test frequency into the power meter as indicated on the label of the power sensor.
8. Record the power level displayed on the power meter as the Level Flatness in Table 4-8.

ManualsPlus.com

9. Repeat steps 7 through 8 to measure the flatness at each center frequency setting listed in Table 4-8. The ⇑ may be used to tune to center frequencies above 500 MHz.

NOTE *75 Ω RF Out only:* Repeat steps 5 through 7 to measure the flatness at the frequencies above 1 MHz listed in Table 4-8.

Table 4-8 Tracking Generator Level Flatness Worksheet

Center Frequency	Level Flatness (dB)
100 kHz or 1 MHz[a]	
5 MHz	
40 MHz	
50 MHz	0 (Ref)
80 MHz	
500 MHz	
1000 MHz	
1500 MHz	

a. This frequency is 100 kHz for analyzers with 50 Ω tracking generators, and 1 MHz for analyzers with 75 Ω tracking generators.

ManualsPlus.com

Tracking Generator Level Flatness: E4402B, E4403B, E4404B, E4405B, E4407B and E4408B, Option 1DN

Test Limits

	Maximum	Maximum
Flatness ≤ 10 MHz	–3.5 dBm	+3.5 dBm
Flatness > 10 MHz	–2.5 dBm	–2.5 dBm

Test Description

A calibrated power sensor is connected to the tracking generator output to measure the power level at 50 MHz. The power meter is set for REL mode so that future power level readings are in dB relative to the power level at 50 MHz. The tracking generator is then stepped to several frequencies throughout its range. The output power difference relative to the power level at 50 MHz is measured at each frequency and recorded.

Item	Critical Specifications (for this test)	Recommended Agilent Model
Meters		
Power Meter		438A or E4418A, E4419A
RF Power Sensor	Frequency Range: 100 kHz to 3.0 GHz	8482A
Adapters		
Type-N (f) to BNC (m), 75-Ohm		1250-1534
Cables		
(2) BNC, 122-cm (48-in)		10503A

ManualsPlus.com

Figure 4-9 Equipment Setup

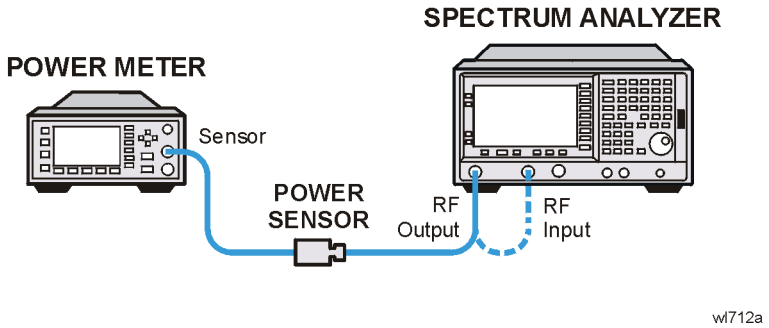

Procedure

1. Calibrate the tracking generator by pressing **System**, **Alignments**, **Align Now**, **TG**. Connect the RF OUT to the RF INPUT when prompted.
2. Press **System**, **Power On/Preset**, **Preset Type** (Factory), **Preset** on the analyzer, then wait for the preset routine to finish. Set the analyzer by pressing the following keys:

   FREQUENCY, **Center Freq**, 50, **MHz**
   CF Step, 100, **MHz**
   SPAN, **Zero Span**
   Source, Amplitude (On), –20, **dBm**
   System, **Alignments**, **Auto Align**, **Off**

3. Zero and calibrate the power meter and power sensor. Make sure the power meter is reading out in dBm. Enter the power sensor 50 MHz cal factor into the power meter.
4. Connect the power sensor to the RF Out on the analyzer as shown in Figure 4-9.
5. Press REL on the power meter. The power meter readout amplitudes are now relative to the power level at 50 MHz.
6. Set the analyzer center frequency to 100 kHz by pressing **FREQUENCY**, 100, **kHz**.
7. Enter the appropriate power sensor Cal Factor for the test frequency into the power meter as indicated on the label of the power sensor. This must be done at each test frequency.
8. Record the power level displayed on the power meter as the Level Flatness in Table 4-9 on page 165.
9. Repeat steps 5 through 7 to measure the flatness at each center frequency setting listed in Table 4-9. The ⇑ may be used to tune to center frequencies above 500 MHz.
10. Press **System**, **Alignments**, **Auto Align**, **On**.

ManualsPlus.com

Table 4-9 Tracking Generator Level Flatness Worksheet

Center Frequency	Level Flatness (dB)
100 kHz	
5 MHz	
40 MHz	
50 MHz	0 (Ref)
80 MHz	
500 MHz	
1000 MHz	
1500 MHz	
2000 MHz	
2300 MHz	
2500 MHz	
2700 MHz	
3.0 GHz	

ManualsPlus.com

ManualsPlus.com

Numerics

1xEV-DO error messages
  13001 to 13100, 80, 81

A

Agilent Technologies URL, 2
amplitude accuracy test, 102
  option 1DS, 106
amplitude linearity test, 115

C

cdma2000 error messages
  10801 to 10900, 75
cdmaOne error messages
  10951 to 10975, 76
command error messages, 33, 37

D

DANL test, 107
device-specific error messages
  -399 to -300, 33, 35
  64 to 799, 33, 41
displayed average noise level. See DANL, 107

E

equipment
  functional tests, 98
  warm-up time, 97
error history, 31
error messages, 34
  >10,000 (measurement application), 33, 54
  10008 to 10517 (power suite), 55
  10524 to 10561 (phase noise), 70
  10601 to 10700 (GSM/EDGE), 72
  10701 to 10800 (W-CDMA), 74
  10801 to 10900 (cdma2000), 75
  10901 to 10925 (NADC), 75
  10926 to 10950 (PDC), 76
  10951 to 10975 (cdmaOne), 76
  10976 to 11000 (phase noise), 76
  12000 to 12999 (noise figure), 77
  13001 to 13100 (1xEV-OD), 80, 81
  -199 to -100 (command), 33, 37
  1xEV-OD (13001 to 13100), 80, 81
  -299 to -200 (execution), 33, 35
  -399 to -300 (device-specific), 33, 35
  -499 to -400, 33, 34
  64 to 799 (device-specific), 33, 41
  cdma2000 (10801 to 10900), 75
  cdmaOne (10951 to 10975), 76
  command (-199 to -100), 33, 37
  device-specific (-399 to -300), 33, 35
  device-specific (64 to 799), 33, 41
  empty error queue, 34
  example, 32
  execution (-299 to -200), 33, 35
  format, 32
  GSM/EDGE (10601 to 10700), 72
  measurement application (>10,000), 33, 54
  NADC (10901 to 10925), 75
  noise figure (12000 to 12999), 77
  PDC (10926 to 10950), 76
  personality option, 33, 54
  phase noise (10524 to 10561), 70
  phase noise (10976 to 11000), 76
  power suite (10008 to 10517), 55
  query, 33, 34
  types, 33
  viewing messages in queue, 31
  W-CDMA (10701 to 10800), 74
error queues
  capacity, 31
  clearing, 31
  empty message, 34
  front panel, 31
  overflow handling, 31
  remote interface (SCPI), 31
  SCPI remote interface, 31
  types, 31
  viewing entries, 31
errors
  0, 34
  10008 to 10517, 55
  10524 to 10561, 70
  10601 to 10700, 72
  10701 to 10800, 74
  10801 to 10900, 75
  10901 to 10925, 75
  10926 to 10950, 76
  10951 to 10975, 76
  10976 to 11000, 76
  12000 to 12999, 77
  13001 to 13100, 80, 81
  -199 to -100, 37
  -299 to -200, 35
  -399 to -300, 35
  -499 to -400, 34
  64 to 799, 41
execution errors, 33, 35

F

flatness, 139
  frequency response, 139
  test description, 139
frequency readout accuracy test, 109
frequency response, 139
  flatness, 139
  test description, 139
frequency response (flatness) test, 111
front panel
  error queue characteristics, 31
front panel error queue, 31
functional testing
  introduction, 96
  performance verification, 96
functional tests
  before performing, 97
  equipment list, 98
  introduction, 95
  vs performance verification tests, 96
  warm-up time, 97
  See also individual functional tests, 95

G

GSM/EDGE error messages
  10601 to 10700, 72

I

informational messages, 30
  descriptions, 82
  display location, 82

M

measurement application error messages
  >10,000, 33, 54
messages
  error, 34
  informational, 82
  status, 86

N

NADC error messages
  10901 to 10925, 75
noise figure error messages
  12000 to 12999, 77

P

PDC error messages
  10926 to 10950, 76

ManualsPlus.com

performance verification tests vs
functional tests, 96
personality error messages, 33, 54
phase noise error messages
10524 to 10561, 70
10976 to 11000, 76
pop-up messages, 30
power suite error messages
10008 to 10517, 55

Q

queries
error messages, 33, 34

R

remote interface (SCPI) error
queue, 31

S

SCPI interface error queue, 31
second harmonic distortion test, 118
status messages, 30
descriptions, 86
display location, 86

T

test descriptions
frequency response, 139
tests. See functional tests

U

URL (Agilent Technologies), 2
user error messages, 30

W

W-CDMA error messages
10701 to 10800, 74