ManualsPlus.com

User's Guide

Agilent Technologies
E4406A VSA Series
Transmitter Tester

Agilent Technologies

Manufacturing Part Number: E4406-90177
Supersedes E4406-90145

Printed in USA

September 2001

© Copyright 1999 - 2001 Agilent Technologies, Inc.

ManualsPlus.com

The information contained in this document is subject to change without notice.

Agilent Technologies makes no warranty of any kind with regard to this material, including but not limited to, the implied warranties of merchantability and fitness for a particular purpose. Agilent Technologies shall not be liable for errors contained herein or for incidental or consequential damages in connection with the furnishing, performance, or use of this material.

Safety Information

The following safety notes are used throughout this manual. Familiarize yourself with these notes before operating this instrument.

WARNING **Warning denotes a hazard. It calls attention to a procedure which, if not correctly performed or adhered to, could result in injury or loss of life. Do not proceed beyond a warning note until the indicated conditions are fully understood and met.**

CAUTION Caution denotes a hazard. It calls attention to a procedure that, if not correctly performed or adhered to, could result in damage to or destruction of the instrument. Do not proceed beyond a caution sign until the indicated conditions are fully understood and met.

WARNING **This is a Safety Class 1 Product (provided with a protective earth ground incorporated in the power cord). The mains plug shall be inserted only in a socket outlet provided with a protected earth contact. Any interruption of the protective conductor inside or outside of the product is likely to make the product dangerous. Intentional interruption is prohibited.**

WARNING **No operator serviceable parts inside. Refer servicing to qualified personnel. To prevent electrical shock do not remove covers.**

CAUTION Always use the three-prong AC power cord supplied with this product. Failure to ensure adequate grounding may cause product damage.

ManualsPlus.com

Warranty

This Agilent Technologies instrument product is warranted against defects in material and workmanship for a period of three years from date of shipment. During the warranty period, Agilent Technologies Company will, at its option, either repair or replace products that prove to be defective.

For warranty service or repair, this product must be returned to a service facility designated by Agilent Technologies. Buyer shall prepay shipping charges to Agilent Technologies and Agilent Technologies shall pay shipping charges to return the product to Buyer. However, Buyer shall pay all shipping charges, duties, and taxes for products returned to Agilent Technologies from another country.

Agilent Technologies warrants that its software and firmware designated by Agilent Technologies for use with an instrument will execute its programming instructions when properly installed on that instrument. Agilent Technologies does not warrant that the operation of the instrument, or software, or firmware will be uninterrupted or error-free.

LIMITATION OF WARRANTY

The foregoing warranty shall not apply to defects resulting from improper or inadequate maintenance by Buyer, Buyer-supplied software or interfacing, unauthorized modification or misuse, operation outside of the environmental specifications for the product, or improper site preparation or maintenance.

NO OTHER WARRANTY IS EXPRESSED OR IMPLIED. AGILENT TECHNOLOGIES SPECIFICALLY DISCLAIMS THE IMPLIED WARRANTIES OF MERCHANTABILITY AND FITNESS FOR A PARTICULAR PURPOSE.

EXCLUSIVE REMEDIES

THE REMEDIES PROVIDED HEREIN ARE BUYER'S SOLE AND EXCLUSIVE REMEDIES. AGILENT TECHNOLOGIES SHALL NOT BE LIABLE FOR ANY DIRECT, INDIRECT, SPECIAL, INCIDENTAL, OR CONSEQUENTIAL DAMAGES, WHETHER BASED ON CONTRACT, TORT, OR ANY OTHER LEGAL THEORY.

ManualsPlus.com

ManualsPlus.com

1. Getting Started
What Documentation Comes with the E4406A VSA Series Transmitter Tester 15
URL for the Latest VSA Transmitter Tester Update 17
Understanding Digital Communications Measurements 17
Updating the Firmware 18
Making a Measurement 19
Front Panel Keys Context Dependency 20
Front Panel Description 24
Rear Panel Description 30
Display Annotation 33
Installing Optional Measurement Personalities 36
Available Personality Options 36
Loading the Optional Personality 37
Viewing a License Key 38
Installing a License Key 39
Using the Uninstall Key 39
Cables for Connecting to the Serial Port (RS-232) 41
Safety Considerations 47
Instrument Installation 47
Instrument Operation and Maintenance 48

2. Using System Features
Using System Keys 52
Install and Uninstall 52
Key Locations 53
Using Print and Print Setup Functions 63
Printing a Displayed Screen 63
Printing a Screen Image to a File on A: or C: Drives 65
Using File and Save Keys 67
Loading a State 67
Saving a State 67
Using the Alpha Editor Keys 68
Using Input/Output Configuration Keys 69
Configuring I/O 69
File System 71
Reference 71
Using System Configuration and Alignment Keys 73
Restore System Defaults 73
Show Errors 73
Show System 74
System (Local) 76
Alignment 77

ManualsPlus.com

3.Setting the Mode
Selecting a Mode 82
Mode Setup 83
Input Keys 83
Trigger Keys 85
Selecting the Frequency/Channel 86

4. Making Measurements
Basic Measurements 88
Preparing for Measurements 89
Initial Setup 89
Using Measure Keys 89
Measurement Control 90
Measurement Setup 90
Changing the View 93
Using Markers 95
Making the Spectrum (Frequency Domain) Measurement 97
Purpose 97
Measurement Method 97
Making the Measurement 97
Results 98
Changing the Measurement Setup 99
Changing the View 103
Changing the Display 105
Using the Markers 108
Troubleshooting Hints 109
Making the Waveform (Time Domain) Measurement 110
Purpose 110
Measurement Method 110
Making the Measurement 110
Results 111
Changing the Measurement Setup 113
Changing the View 116
Changing the Display 118
Using the Markers 120
Troubleshooting Hints 121
Making the Adjacent Channel Power (ACP) Measurement 122
Purpose 122
Measurement Method 122
Making the Measurement 123
Results 123
Changing the Measurement Setup 124
Changing the View 128
Troubleshooting Hints 130
Making the Channel Power Measurement 131
Purpose 131
Measurement Method 131
Making the Measurement 132
Results 132

ManualsPlus.com

Changing the Measurement Setup . . . 133
Changing the Display . . . 135
Using the Marker . . . 135
Troubleshooting Hints . . . 135
Making the Power Stat CCDF Measurement . . . 136
Purpose . . . 136
Measurement Method . . . 136
Making the Measurement . . . 137
Results . . . 137
Changing the Measurement Setup . . . 138
Changing the View . . . 139
Changing the Display . . . 139
Using the Markers . . . 140
Troubleshooting Hints . . . 140
Service Measurements . . . 141
Timebase Frequency . . . 142
Purpose . . . 142
Measurement Method . . . 142
Test Setup . . . 142
Results . . . 143
50 MHz Amplitude . . . 144
Purpose . . . 144
Measurement Method . . . 144
Test Setup . . . 144
Results . . . 145
Sensors . . . 146
Purpose . . . 146
Measurement Method . . . 146
Test Setup . . . 146
Results . . . 146
Front Panel Test . . . 148
Purpose . . . 148
Test Setup . . . 148
Results . . . 149
Troubleshooting Hints . . . 149
Service Power vs. Time Measurement . . . 150
Purpose . . . 150
Using Baseband I/Q Inputs (Option B7C) . . . 151
What are Baseband I/Q Inputs? . . . 152
What are Baseband I/Q Signals? . . . 153
Why Make Measurements at Baseband? . . . 153
Making Measurements with Baseband I/Q Inputs . . . 154
Baseband I/Q Measurement Overview . . . 155
Selecting Input Probes for Baseband Measurements . . . 156
Selecting Baseband I/Q Inputs . . . 159
Selecting Baseband I/Q Input Connectors . . . 159
Setting Up Baseband I/Q Inputs . . . 161
Baseband I/Q Measurement Views . . . 165
Baseband I/Q Measurement Result Examples . . . 168

ManualsPlus.com

Baseband I/Q Key Access Locations 172
BbIQ Programming Commands 174

5. If You Have a Problem
Problem Symptoms and Solutions 180
Key or Feature Does Not Appear in Menu 180
Frequency Unlock or External Reference Missing - Error Messages 181
LAN External Loopback Test Failed - Error Message 181
Instrument Fails Alignment - Error Message 181
Measurement Keys Do Not Appear after Pressing the Mode Key 182
Instrument Power-On Problem 182
LAN Communication Problem. 182
Instrument Keyboard is Locked 182
Agilent Technologies Test and Measurement Support, Services, and Assistance 183
Returning Your Instrument to Agilent Technologies 184

6. Options and Accessories
Options and Measurement Personalities 186
Option BAH: GSM Measurement Personality 186
Option BAC: cdmaOne Measurement Personality 186
Option BAE: NADC/PDC Measurement Personalities 186
Option HN1: iDEN Measurement Personality 187
Option BAF: W-CDMA Measurement Personality 187
Option B78: cdma2000 Measurement Personality 187
Option B7C: Baseband IQ Measurement Personality 188
Option 202: EDGE (with GSM) Measurement Personality 188
Option 300: 321.4 MHz IF Output 189
Option 252: Retrofit EDGE to Existing GSM Measurement Personality 189
Option 0B1: Additional Copy of Manuals 189
Option 0BV: Component-level Service Documentation 190
Option 0BW: Assembly-level Service Documentation 190
Option 1CM: Rack Mount Kit 190
Option 1CN: Handles Kit. 190
Option 1CP: Rack Mount with Handles Kit 190
Option 1CR: Rack Slide Kit 190
VSA Transmitter Tester Measurement Personalities Retrofit 190
Accessories 191
AC Probe 191
Broadband Preamplifiers and Power Amplifiers 191
GPIB Cable 191
Parallel Interface Cable 191
Printer 191
RS-232 Cables 192
N2714A Calibration and Adjustment Software 192

ManualsPlus.com

Linear Envelope 166
10 MHz Out 72
50 MHz Amplitude 144
50 MHz Ref 83
Advanced 90
Align 50 MHz Reference 78
Align ADC 78
Align All Now 77
Align Current IF Flatness 78
Align Current SysGain 78
Align IF 78
Align RF 78
Align Subsystem 78
Alignments 77
Alpha Editor 68
Auto Align 77
Auto Trig 85
Average 90
Avg Bursts 91
Avg Mode 91
Avg Number 91
Avg Type 91
Band Power 96
Baseband Align Signal (ON OFF) 160
Basic 82
cdmaOne 82
Clear Error Queue(s) 74
Color Print 63
Color Printer 63
Config I/O 69
Corrections 79
Current 93
Custom. 63
Define Custom 63
Delay 85
Delta 96
Eject Page 63
Emulated GPIB Address 71
Emulated GPIB Logical Unit 70
Emulated GPIB Name 70
ESC 77
Ethernet Addr 71
Ext Front 86
Ext Rear 86
File Location 65
Frame Timer 86
Frame 92
Free Run 92
Freq Ref 71

ManualsPlus.com

Front Panel Test....148
GPIB Address....69
GSM....82
HCOPy Dest....65
Host Name....70
I Offset....161
I Only....159
I/Q Input Z....162
I/Q INPUT....103
I/Q Range....161
I/Q Setup....161
I/Q Z Ref for Input Z = 1M Ω....162
IF Align....83
Image....65
Input Atten....84
Input Port....83
install....36
Instrument Logical Unit....70
Instrument Name....70
Invert....65
IP Address....70
Landscape....63
Language,....63
Level....85
License Key....38
Line....92
Load State....67
Log-Pwr Avg....91
Marker All Off....96
Max Total Pwr....84
Maximum Connections....70
Maximum....91
Minimum....91
Noise....96
Normal....95
Offset....86
Orientation....63
PCL3....63
PCL5....63
Peak Level....85
Period....86
Portrait....63
Pos....85
Printer....65
Pwr Avg....91
Q Offset....162
Q Only....159
Ref Position....94
Ref Value....93

ManualsPlus.com

Reference 71
Reprint 63
Res BW 90
Reset Offset Display 86
Restore Align Defaults 79
Restore Meas Defaults 90
Resume 90
RF Burst (Wideband) 85
RF 83
Save State 67
Scale/Coupling 94
Scale/Div 93
SCPI LAN 70
Select 96
Sensors 146
Server 70
Service 82
Shape 96
Show Errors 73
SICL Server 70
Signal Amptd 84
Signal Type 84
Slope 85
Socket Port 70
Span 93
Sweep Time 93
Sync Source 86
Telnet Port 70
Time Corr 79
Timebase Frequency 142
Trace 95
Trig Holdoff 85
Trigger 85
Verbose 74
Video (IF Envlp) 85
Visible Align 79
Voltage Avg 91

ManualsPlus.com

ManualsPlus.com

1 Getting Started

This chapter introduces you to basic features of the instrument, including front panel keys, rear panel connections, and display annotation. You will also find out how to make a basic measurement and install applications.

ManualsPlus.com

Topics include:

"What Documentation Comes with the E4406A VSA Series Transmitter Tester" on page 15.

"Making a Measurement" on page 19.

"Front Panel Keys Context Dependency" on page 20.

"Front Panel Description" on page 24.

"Rear Panel Description" on page 30.

"Display Annotation" on page 33.

"Installing Optional Measurement Personalities" on page 36.

"Safety Considerations" on page 47.

"Cables for Connecting to the Serial Port (RS-232)" on page 41.

ManualsPlus.com

What Documentation Comes with the E4406A VSA Series Transmitter Tester

With your purchase of the instrument you receive the following materials:

Table 1-1 Standard Documentation

Part Description	Notes
User's Guide	Does not include operational information on the optional measurement personalities.
Specifications	Includes specifications for the transmitter tester and all optional measurement personalities. (Special options will be documented elsewhere.)
Programmer's Guide	Does not include commands for the optional measurement personalities
Documentation CD-ROM	Includes programming examples. Does not include service documentation or software

An E4406A standard instrument contains the Basic and Service modes, which are described in the User's Guide.

If you have purchased an optional measurement personality, your instrument comes loaded with the personality you have selected plus the Basic and Service modes. You also receive the related guide, containing measurement and programming information, for the personality you have ordered.

ManualsPlus.com

Table 1-2 Personality Documentation

Measurement Option	Part Description
Option BAC	cdmaOne Guide
Option BAH	GSM Guide
Option 202	EDGE (w/GSM) Guide
Option BAE	NADC, PDC Guide
Option BAF	W-CDMA Guide
Option B78	cdma2000 Guide

Service documentation is also available from Agilent Technologies.

NOTE If the shipping container is damaged, or any part is missing, notify Agilent Technologies (see page 184 for locations). When transporting the instrument use the original or comparable packaging.

ManualsPlus.com

URL for the Latest VSA Transmitter Tester Update

For the latest information about this instrument, including firmware upgrades, application information, and product information, please visit the following URL: www.agilent.com/find/vsa/.

Understanding Digital Communications Measurements

Additional measurement application information is available through your local Agilent Technologies sales and service office. See the “If You Have a Problem” chapter for office location information. Some available application notes are listed below.

Description	Agilent Part Number
Digital Modulation in Communications Systems - An Introduction, Application Note 1298	5965-7160E
Understanding CDMA Measurements for Base Stations and Their Components, Application Note 1311	5968-0953E
Understanding GSM Transmitter Measurements, Application Note 1312	5968-2320E
HPSK Spreading for 3G	5968-8438E
Agilent E4406A VSA Series Transmitter Tester Self-Guided Tour	5968-7617E
Designing and Testing 3GPP W-CDMA Base Stations, Application Note 1355	5980-1239E
Designing and Testing 3GPP W-CDMA User Equipment, Application Note 1356	5980-1238E
Designing and Testing IS-2000 Base Stations, Application Note 1357	5980-1303E
Designing and Testing IS-2000 Mobile Stations, Application Note 1358	5980-1237E
Understanding PDC and NADC Transmitter Measurements for Base Transceiver Stations and Mobile Stations, Application Note 1324	5968-5537E

ManualsPlus.com

Updating the Firmware

Updated versions of the E4406A VSA Transmitter Tester firmware will be available from several sources. Information on the latest firmware revision can be accessed through the following URL.

URL to Contact to Obtain Firmware Update Information
www.agilent.com/find/vsa/

ManualsPlus.com

Making a Measurement

This instrument enables you to make a wide variety of measurements on digital communications equipment using the `Basic Mode` measurement capabilities. It also has optional measurement personalites that make measurements based on industry standards.

To set up the instrument to make measurements, you need to:

1. Select a mode or personality which corresponds to a digital communications format, like cdma2000, W-CDMA, or EDGE. Use the Basic mode to make measurements of signals with non-standard formats. After selection of the mode, adjustments to the mode settings may be made as required.
2. Select a specific measurement to be performed, like ACP, Channel Power, or EVM, etc. After selection of a measurement, adjustments to the measurement settings may be made as required.

   Depending on Measurement Control settings, the instrument will begin making the selected measurements. The resulting data will be shown on the display or available for export.
3. Select a front panel View to display the data from the current measurement. Depending on the mode and measurement selected, various graphical and tabular presentations are available.

If you have a problem, and get an error message, see the *E4406A VSA Transmitter Tester Instrument Messages and Functional Tests Guide*.

The main keys used in the three steps are shown in the table below.

Step	Primary Key	Setup Keys	Related Keys
1. Select & setup a mode	*MODE*	*Mode Setup*, *Input*, *FREQUENCY/ Channel*	*System*
2. Select & setup a measurement	*MEASURE*	*Meas Setup*	*Meas Control*, *Restart*
3. Select & setup a view	*View/Trace*	*SPAN X Scale, AMPLITUDE Y Scale*, *Display*, *Zoom* , **Next Window**	*File*, *Save*, *Print*, *Print Setup*, *Marker*, *Search*

A setting may be reset at any time, and will be in effect on the next measurement cycle or View.

ManualsPlus.com

Front Panel Keys Context Dependency

Many of the instrument features are context dependent. The functions that are available will change based on your selections of mode, mode setup, measurement, and measurement setup. The following figures represent the dependency relationships of the front panel keys.

Figure 1-1 System and Navigation Keys are not Context Dependent

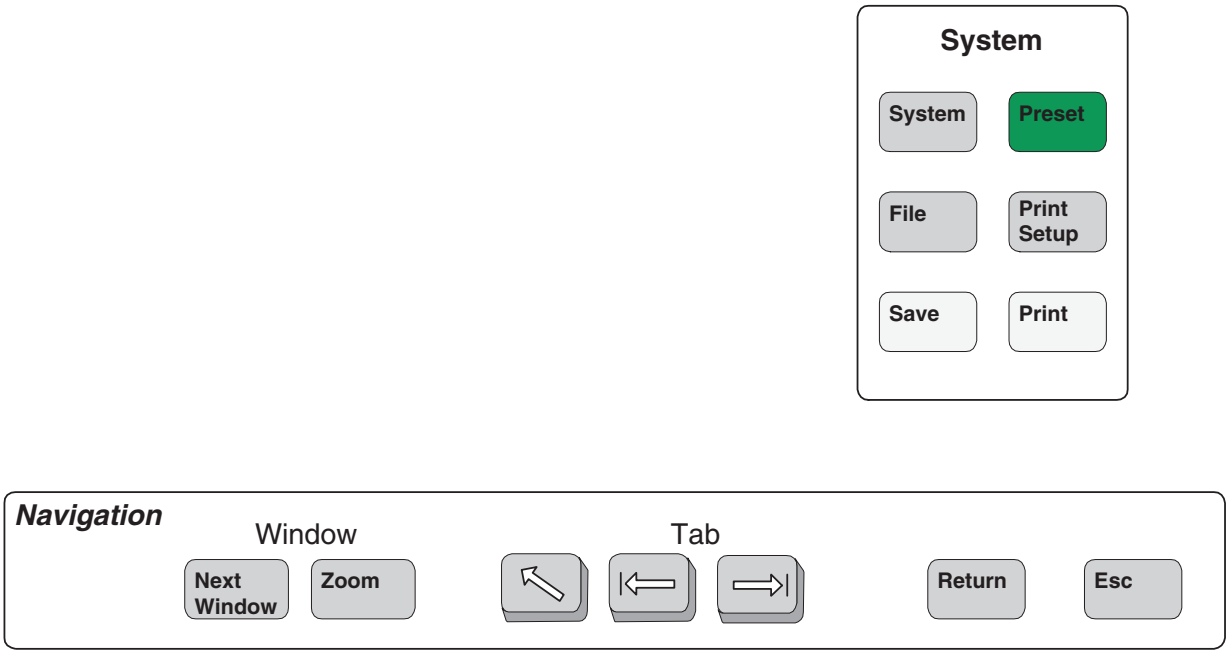

ManualsPlus.com

Figure 1-2 These Features are Dependent on the Selected Mode and the Mode Setup

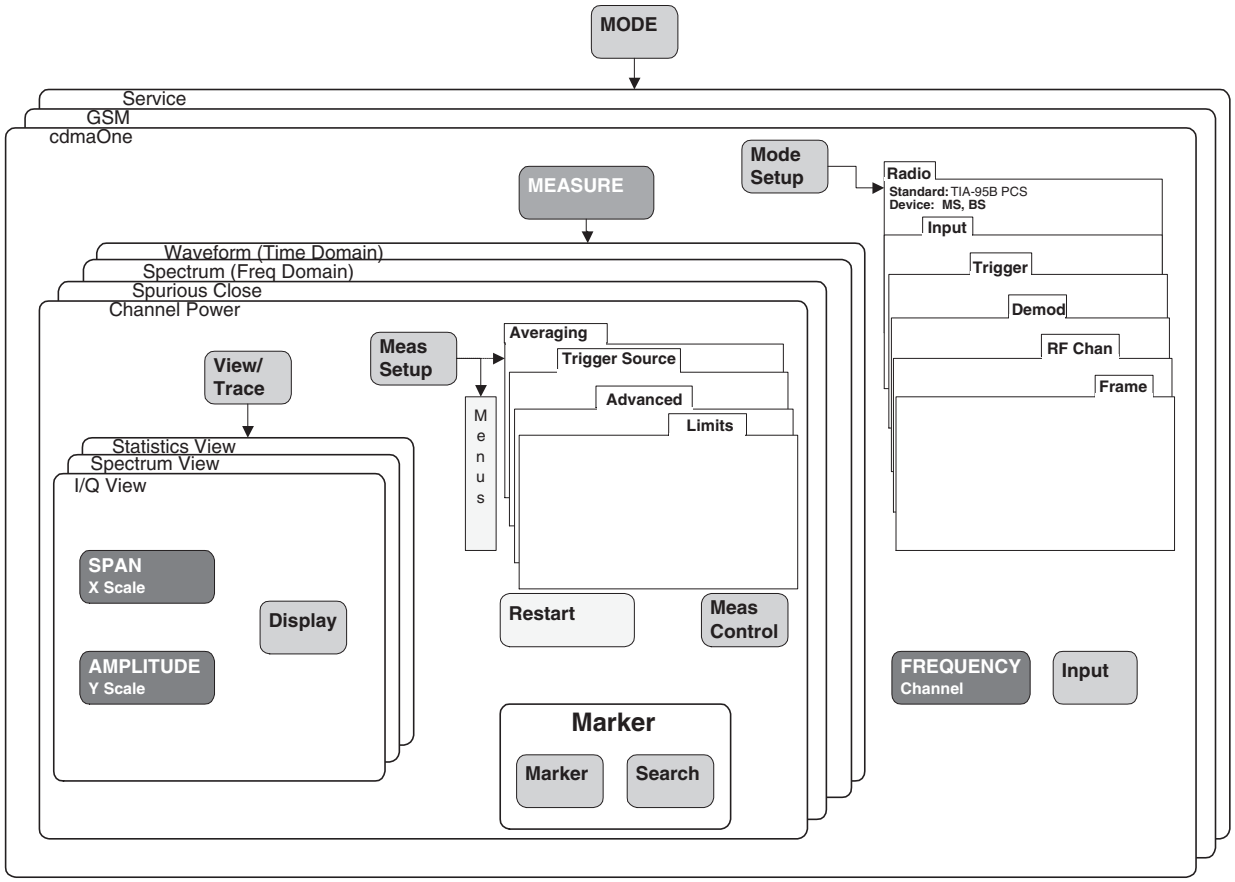

ManualsPlus.com

Figure 1-3 These Features are Dependent on the Selected Measurement and the Measurement Setup

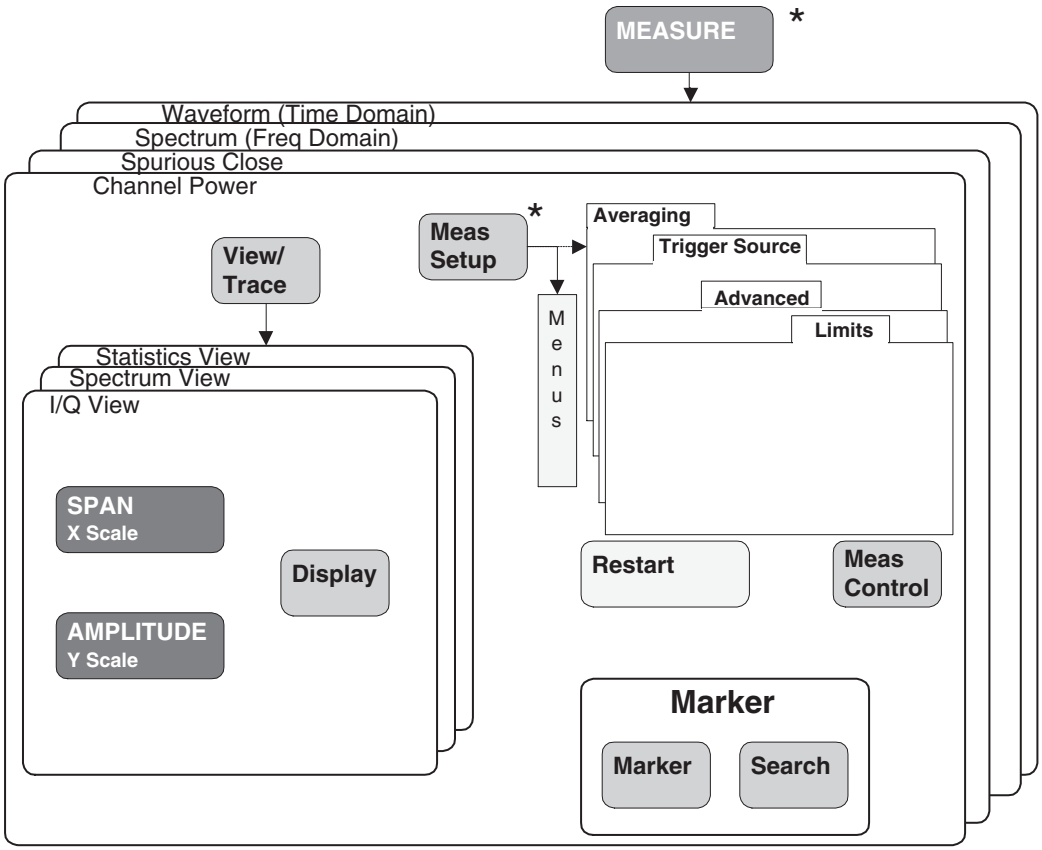

* Some **Measure** and **Meas Setup** parameters are context dependent upon the Radio variant and Device selected in the **Mode Setup**

ManualsPlus.com

Figure 1-4 Front Panel Keys Context Dependent Relationships

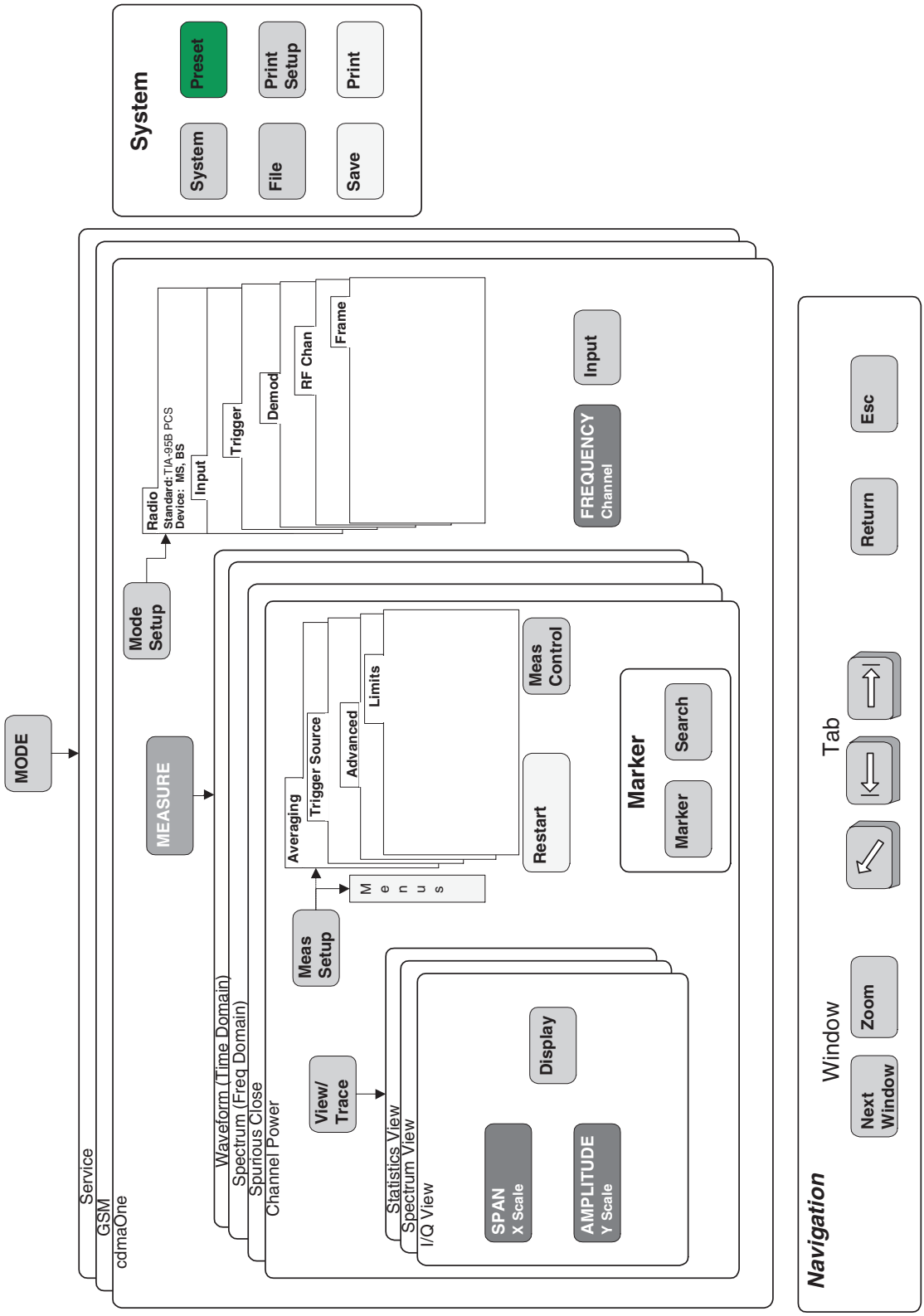

ManualsPlus.com

Front Panel Description

Key menus may vary depending on the currently selected mode or measurement. Softkeys which are not available for use are greyed-out. Keys may be greyed-out as a result of:

the current setting of other inter-related functions,
not having a required password or license key, or
not having some piece of optional hardware that is required.

Paths to access any feature will be found in the key access table on page 53. Display annotation is explained on page 33. Operation of the 3.5 inch floppy-drive is covered in the section on printing on page 63.

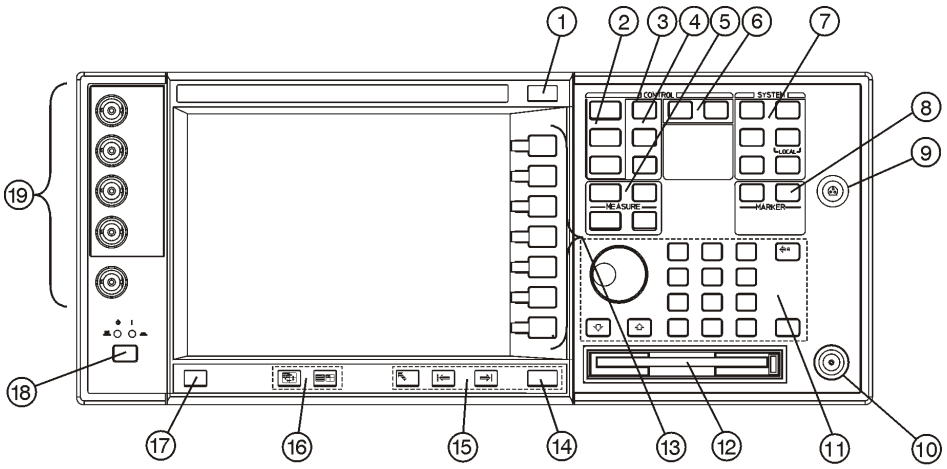

pa81a

1. ESC key Use the escape key to exit any function without modifying current parameters. Pressing the *ESC* key will:

- Clear any numeric entry that you have begun to enter but decided you want to cancel.
- Remove any entries that are visible in the active function area of the display (see the section on annotation on page 33 for a description of the active function area and other display features).
- Cancels an alignment if one is in progress.

2. Control keys

Sets parameters that are used by the measurement in the current measurement mode.

ManualsPlus.com

- *FREQUENCY/Channel* accesses softkeys that control the center frequency or channel number. These parameters apply to all measurements in the current mode.
- *SPAN/X Scale* accesses softkeys that control the horizontal scale in units of frequency, time, symbols or bits. The parameters in this menu apply only to the active window in the current measurement. See page 93 for more detail.
- *AMPLITUDE/Y Scale* accesses softkeys that control vertical scale functions in units of dBm, dB, volts, degrees, or radians. The parameters in this menu apply only to the active window in the current measurement. See page 93 for more detail.

3. Input key The *Input* key accesses softkeys that control the input of the transmitter tester. These affect all measurements within the current mode. Note that the internal 50 MHz reference signal and the IF align signal are used as internal inputs that do not require external connections. See page 73 for more detail.

4. View keys *View* keys modify the format of the trace and numeric data on the display. See page 93 for more detail.

- *View/Trace* accesses softkeys that control the way results are viewed.
- *Display* accesses softkeys that change the display. Functions such as limit mask on/off and dots on/off are available for some measurements.

5. Measure keys are used to select and set up a specific measurement within the selected application. See page 89 for more detail.

- *MEASURE* accesses softkeys that select and initiate the various measurements that are specific to the current mode.
- *Meas Setup* accesses the setup parameters that are specific to the current measurement.
- *Restart* causes the measurement that is currently in process to stop, then start again at the beginning according to the current measurement setup parameters.
- *Meas Control* accesses softkeys that affect the measurement after it has been setup, for example selecting a single or continuous measurement.

ManualsPlus.com

6. Mode keys select the measurement mode and mode parameters See page 83 for more detail.

- *MODE* accesses softkeys to select the instrument mode. Each mode is independent of all other modes.
- *Mode Setup* accesses softkeys that affect parameters that are specific to the current mode and affect all measurements within that mode.

7. System keys access system features, that are used with all instrument modes. See page 52 for further explanation of system features.

- *System* accesses features that control instrument configuration at the system level, like I/O configuration and alignment, which affect all instrument modes. Pressing *System* also returns the instrument to local control, if it has been in remote mode.
- *Preset* resets all parameters of the current mode back to the factory defaults.
- *Print* immediately prints what is on the screen to the printer, or saves a file to a floppy disc, according to the parameters that are currently set in the *Print Setup* menu. See page 63 for more detail.
- *Print Setup* configures the transmitter tester for printing to a printer, or saving an image file to the floppy disc drive, and also allows you to select the printer type.
- *File* accesses softkeys that control the file system of the transmitter tester for saving and loading instrument states. See page 67 for more detail.
- *Save* saves the current instrument state in the *File* menu. See page 67 for more detail.

8. Marker keys are used to obtain specific information about parts of the displayed measurement (for example, to identify the exact frequency of an offset). See page 95 for more detail.

- *Marker* accesses softkeys that allow manual positioning of markers.
- *Search* automatically performs a peak search, and accesses softkeys that automatically position markers at preset locations on the trace (for example, to determine the difference between the amplitude of one peak and another).

ManualsPlus.com

9. Probe Power The probe power input supplies power for external probes; the three connectors are a ground, and a +15 V, and a –12.6 V connector. The probe power supplies power to high frequency probes and accessories, such as preamplifiers, that are used as accessories to the transmitter tester. The probe power provides a maximum of 150 mA.

10. RF Input The 50 Ω RF input allows for input of an external RF signal. The connector is a type N female, and is rated for a maximum input of +35 dBm for measuring a CW signal, and a maximum of 26 volts for a DC signal.

11. Data Entry keys are used to enter numeric values. Entries made using data entry keys will be visible in the active function area (see the section on annotation on page 33 to locate the active function area).

- The *Enter* key is used to terminate numeric data where no units of measurement are being entered, or where you want to terminate with the default unit of measurement. For operations involving selection of a unit of measurement (for example, dB, dBm, Hz, s, degrees, radians), the *Units* softkey menu (explained below) is used to terminate numeric entries.
- *Units* softkeys are used to enter units of measurement. If the value you are entering is in units of measurement, the units softkey menu will automatically appear once you enter a digit. After entering the desired numeric value, you terminate the entry by pressing the appropriate units of measurement softkey.
- *Numeric* keys enter numeric values as indicated on the keys. In addition, decimal and positive and negative sign keys are available for your use.
- The *Step* keys (these are the up and down arrow keys) change numeric values in increments of the current step size.
- The *Backspace* key moves the cursor backwards one space and erases the character in that space. You can use the *Backspace* key to backspace characters in the active function area.
- The RPG Knob changes numeric values in increments of the current knob resolution.

ManualsPlus.com

12. Floppy Disk Drive. The floppy disk drive accepts 1.44 megabyte disks. For an explanation of the operation of the floppy disc drive see the Using Print Keys section on page 63.

13. Softkeys Softkeys either activate a feature or access a further softkey menu. An arrow on the right side of a softkey label indicates that the key accesses a further menu. The softkey which is currently active is highlighted. Keys unavailable for use are greyed-out. If a softkey menu has multiple pages, further pages will be accessed by pressing the *More* key which is the bottom key on any multi-page menu.

14. Return key The *Return* key exits the current menu and returns you to the previous menu. If you are on page one of a multi-page menu (a menu with a “More” key) the *Return* key will exit the multi-page menu. When you activate a different measurement, the return list is cleared. The *Return* key will not return you to the previously activated mode, nor will it alter any values you have entered on previous menus.

15. Navigation keys are used to move around in the display, and to return to the previous menu.

- The *Tab Left* feature is not implemented. This feature will be implemented with a future firmware update.
- The *Tab Right* feature is not implemented. This feature will be implemented with a future firmware update.
- The *Home* feature is not implemented. This feature will be implemented with a future firmware update.

16. Window keys are used to move to a different window in the display or to zoom the windows being displayed.

- The *Next Window* key switches between windows. When a single window is being viewed it switches to display the next window which is contained in the current multi-window display which, however, is not initially visible on the display. When viewing multiple windows, it activates the next window on the display. The active window is indicated by a green border.
- The *Zoom* key allows you to switch between a multiple-window screen and a full-size display of the window that is active.

17. Help key The *Help* feature is not implemented. This feature will

ManualsPlus.com

be implemented with a future firmware update.

18. On/Off switch turns on the transmitter tester. A green LED will light below the *Power* switch when the instrument has been turned on. When in standby mode a yellow LED is visible above the *On/Off* switch.

19. Inputs enable you to input one or more of the two following external signals.

- *I input and Q inputs.* There are two I and two Q inputs (I and I–not; Q and Q–not). These connectors are present if the BbIQ measurement personality (Option B7C) is installed in your instrument.
- *External Trigger input.* The external trigger allows external triggering of measurements. The external trigger accepts an external trigger signal between –5 and +5 V, and has a nominal impedance of > 10 kΩ. For more information on triggering, see page 85.

ManualsPlus.com

Rear Panel Description

The diagram below illustrates all rear panel connections. For further explanation of labels found on the rear panel see the section on safety considerations on page 49.

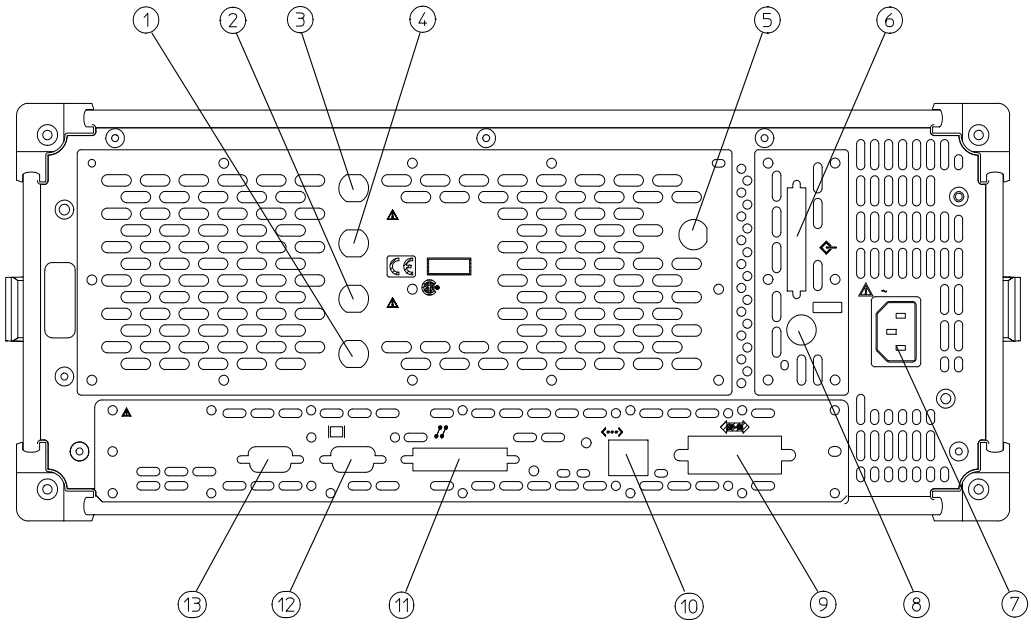

pa82a

1. *TRIGGER 2 OUT* provides a transmitter tester trigger output. This is used to synchronize other test equipment with the transmitter tester.

2. *TRIGGER 1 OUT* provides a transmitter tester trigger output. This is used to synchronize other test equipment with the transmitter tester.

3. *EXT REF IN* allows the input of a 1 to 30 MHz external frequency reference signal. The external reference frequency must be entered by the user.

4. *10 MHz OUT* provides an output of the transmitter tester's internal 10 MHz frequency reference signal. This is used to lock the frequency reference of other test equipment with the transmitter tester. This is a switched output.

ManualsPlus.com

5. *TRIGGER IN* The external trigger allows external triggering of measurements. The external trigger accepts an external trigger signal between –5 and +5 V, and has a nominal impedance of 10k Ω For more information on triggering, see page 85.

6. *SCSI* Currently the *SCSI* connection can only be used to connect an external SCSI drive for firmware upgrades. SCSI functionality will be fully implemented with a future firmware update.

7. *Line Power Input* AC power line connection. The line voltage operates at nominally 115 V (47 to 440 Hz) or at nominally 230 V (47 H to 66 Hz). The input power ranges for the power supply are 90 to 132 V or 195 to 250 Vrms. The power supply automatically senses the input power and switches between these two ranges. There is no customer replaceable power fuse. When on, the instrument consumes less than 350 W; when in standby less than 20 W.

8. *KYBD* This feature is not implemented. This feature will be implemented with a future firmware update. The *KYBD* enables connection of an external PS-2 keyboard using a 6-pin mini-DIN connector. If no keyboard is available you can use the numeric keyboard and the *Alpha Editor* menu key feature to make the entries. The keyboard must be plugged into the instrument prior to powering the instrument on or the keyboard will not work.

9. *GPIB* The *GPIB* allows the connection of a General Purpose Interface Bus (GPIB) cable, which enables remote instrument operation.

10. *LAN-TP* The *LAN-TP* connector can be used:

- as a SICL server emulating IEEE 488.2 protocol over LAN.

- for a telnet programming port that can be sent SCPI commands.

- for a TCP/IP socket programming port that can be sent SCPI commands.

- for anonymous FTP operations to retrieve a screen “gif” or screen “xwd” file from the ftp/pub.

NOTE For more information on remote programming with your transmitter tester, refer to the programmer’s guide.

ManualsPlus.com

11. *PARALLEL* The *PARALLEL* connection supports remote printing.

12. *MONITOR* The *MONITOR* allows connection of an external VGA monitor, using a 15– pin mini D–SUB connector.

13. *RS-232* The serial port *RS-232* is not implemented. This feature will be implemented with a future firmware update.

ManualsPlus.com

Display Annotation

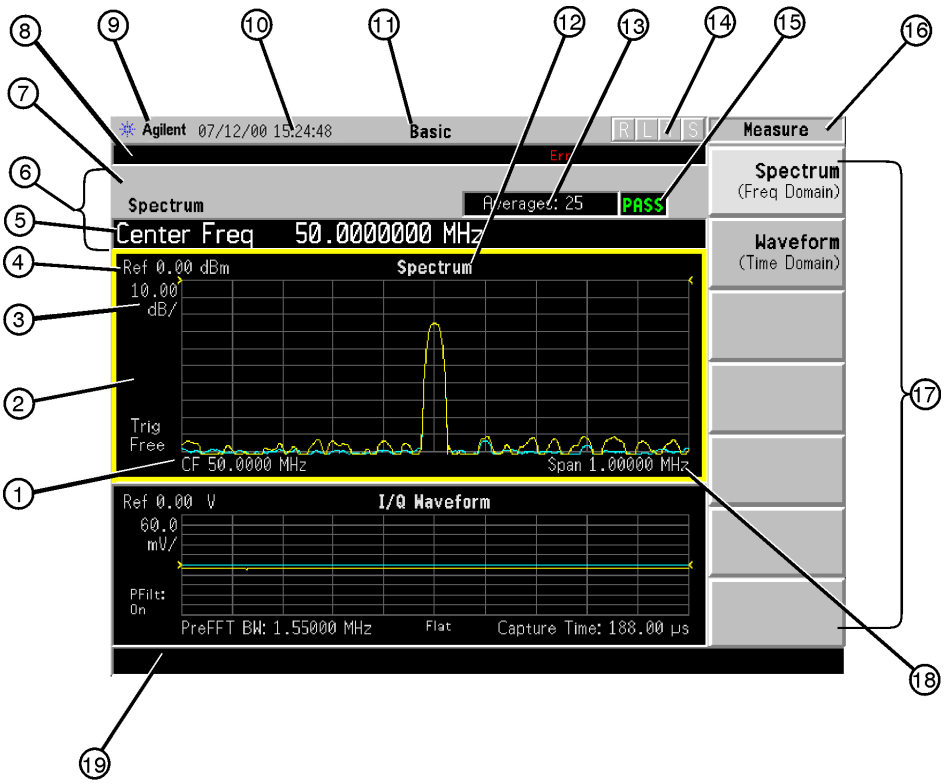

The annotation features explained below refers to the display that is visible when your transmitter tester is in basic measurement mode; this is the default state of the transmitter tester when it is turned on. For explanations relating to unique measurement options such as GSM or cdmaOne see the documentation that accompanies each mode.

1. Center Frequency annotation.

2. Trigger Source Indicator.

3. Vertical Scale dB/Division Indicator.

4. Reference Level Indicator (in dBm).

5. Active Function Area. The active function area displays numeric entries. If you press a measurement key that activates a function, its value will appear in the active function area.

ManualsPlus.com

6. Measurement Bar. Displays information about measurements including some mode setup parameters.

7. Current Measurement Annotation.

8. The Annunciators bar displays annunciators that indicate that hardware errors, other errors, or specific instrument states, are detected in the instrument, as explained below. Error indicators are shown in red text. Where applicable, some states will appear in green, indicating that the feature is active and performing correctly. Informational annunciators are shown in white text. To view error messages fully you will use keys in the *Show Errors* menu (see page 52). The current error message with the highest priority will also appear in the Status/Info Bar that appears at the bottom of the display. The following annunciators are available:

Unlock - This annunciator indicates that one or more of the internal phase-locked loops are unable to maintain a phase-locked state.

Corr Off (corrections off) - This annunciator appears when the *Corrections* softkey is set to off.

Err (error) - This annunciator appears when an error message is placed in the history error queue. It will persist until you use the *Clear Error Queue(s)* key to clear the history error queue.

Ext Ref (external reference) - The green `Ext Ref` annunciator indicates that the external reference has been selected and the instrument is locked to it. The red `Ext Ref` annunciator indicates that the external reference has been selected, but the instrument is not locked to that reference. Note that the external reference on this instrument can be set at any frequency between 1 and 30 MHz; if the entered value does not correspond to the external reference that is in use, a red `Ext Ref` annunciator will appear.

NOTE Be aware that the value entered for the external reference frequency will persist, even after the instrument has been powered off. The user must manually enter a new value for the external reference if a different value is required, even if it corresponds with the default value. An `Ext Ref` annunciator will appear only if the external reference has been activated by the user.

ManualsPlus.com

ESec (even second clock) - The green `ESec` annunciator indicates that the external even second clock has been selected as the sync type and a sync signal is present at the even second input (rear panel Trigger In), and the measurement is using it as the demodulation sync type. The red `ESec` annunciator indicates that an external even second clock has been selected as the sync type but a sync signal is not present at the even second input (rear panel Trigger In). In this case, the error message `Even Second Clock Missing` will appear in the Status/Info bar at the bottom of the display. The even second clock detection is updated every 2 seconds.

Klock (keyboard lock) - The keyboard can be locked remotely using SYSTem:KLOck. The `Klock` annunciator will appear in white text when the keyboard has been locked.

9. System Bar.

10. Time and Date.

11. Personality Mode Indicator.

12. Graph (Window) Title.

13. Averaging Indicator.

14. Remote Status Indicator. The remote status indicator contains four letters: “R”,“ L”, “T”, and “S”. The current status is indicated by the letters that are highlighted. “R” indicates that the instrument is in remote mode. “L” indicates a listen state. “T” indicates a talk state. “S” indicates a service request.

15. Pass/Fail Status Indicator.

16. Menu Title.

17. Softkeys. A softkey that is currently active is highlighted. Greyed-out softkeys are unavailable and may require a password for use.

18. Span annotation.

19. Status/Info Bar. The current error message which has the highest priority will appear in the Status/Info Bar. A programmer can also send a message to the Status/Info bar using a SCPI command.

ManualsPlus.com

Installing Optional Measurement Personalities

When you **install** a measurement personality, follow this process.

1. Install the measurement personality firmware into the instrument. (See the supplied installation instructions.)
2. Enter a license key number that enables the measurement personality. (Refer to the “License Key Numbers” section below.)

Adding additional measurement personalities requires purchasing a retrofit kit for the desired option. The retrofit kit contains the measurement personality firmware. A license key certificate is also included in the kit. It documents the license key number that is for your specific option and instrument serial number. Installation instructions are included with the retrofit kit.

Available Personality Options

The option designation consists of three characters, as shown in the **Option** column of the table below.

Available Personality Options[a]	**Option**
GSM measurement personality	**BAH**
EDGE (with GSM) measurement personality[b]	**202**
cdmaOne measurement personality	**BAC**
NADC, PDC measurement personalities	**BAE**
iDEN measurement personality	**HN1**
W-CDMA measurement personality	**BAF**
cdma2000 measurement personality	**B78**

a. Available as of the print date of this guide.
b. For instruments that already have Option BAH licensed, order E4406AU Option 252 to add EDGE (with GSM).

ManualsPlus.com

Loading the Optional Personality

The installation instructions require you to know three pieces of information about your instrument: the amount of memory available, the Host ID, and the instrument serial number.

Required Information:	**Key Path:**
Instrument Memory: _____	*System*, *File System* (This key is grayed out. The total amount of memory in your instrument will be the sum of the `Used` memory and the `Free` memory)
Host ID: _____	*System*, *Show System*, *Host ID* (It is shown on the display.)
Instrument Serial Number: _____	*System*, *Show System*, *Serial Number*

You must load the desired option into your instrument memory. This usually requires updating the instrument firmware so that it is compatible with the new option. Loading can be done from a CD-ROM or a www location.

You cannot fit all of the available measurement personalities in the instrument memory at the same time. The approximate memory requirements for the options are listed below. These numbers are worst case examples. Many options share share components. The total memory usage of multiple options may not be exactly equal to the combined total.

Available Personality Options	**File Size (VSA - A.05.20)**
GSM measurement personality	2.3 MB
EDGE (with GSM) measurement personality	3.2 MB
cdmaOne measurement personality	1.9 MB
NADC measurement personalities	1.2 MB
PDC measurement personalities	1.3 MB
iDEN measurement personality	1.7 MB
W-CDMA measurement personality	4.1 MB[a]
cdma2000 measurement personality	3.7 MB[a]
**Shared measurement library	1.5 MB

a. This application uses the shared library, so you have to add its memory requirements to this value.

ManualsPlus.com

The *Exit Main Firmware* key is used during the firmware installation process. This key is only for use when you want to update firmware using a LAN connection. The *Exit Main Firmware* key halts the operation of the instrument firmware so you can install an updated version of firmware using a LAN connection. Instructions for loading future firmware updates are available at the following URL: **www.agilent.com/find/vsa/**

Viewing a License Key

Measurement personalities purchased with your instrument have been installed and enabled at the factory. You will receive a unique **License Key** number with every measurement personality purchased. The license key number is a hexadecimal number that is for your specific measurement personality, instrument serial number and host ID. It enables you to install, or reactivate that particular personality.

Follow these steps to display the unique license key for a measurement personality that is already installed in your instrument:

1. Press *System*, *Install*, *Choose Option.* The *Choose Option* key accesses the alpha editor. Use the alpha editor to enter letters (upper-case) and the front-panel numeric keys to enter digits for a personality option that is already installed in the instrument.
2. Press the *Done* key on the alpha editor menu. The unique license key number for your instrument will now appear on the *License Key* softkey.

You will want to keep a copy of your license key number in a secure location. Please enter your license key numbers below for future reference. If you should lose your license key number, call your nearest Agilent Technologies service or sales office for assistance.

License Key Numbers for Instrument with Serial # _____
For Option_____ the license key number is _____
For Option_____ the license key number is _____
For Option_____ the license key number is _____
For Option_____ the license key number is _____
For Option_____ the license key number is _____
For Option_____ the license key number is _____

If you purchase an option later, you will receive a certificate that indicates the unique license key that you will need for you to install that option on your particular serial number instrument.

ManualsPlus.com

NOTE You will need to enter a license key number only if you purchase an additional measurement personality at a later date, or if you want to reactivate a measurement personality that has been deactivated.

Installing a License Key

NOTE Also follow this procedure to reinstall a license key number that has been deleted during an uninstall process, or lost due to a memory failure.

To install a license key number for the selected option, use the following procedure:

1. Press *System*, *Install*, *Choose Option* . The *Choose Option* key accesses the alpha editor menu. Use the alpha editor to enter letters (upper-case) and the front-panel numeric keys to enter numbers for the option designation. Then press the *Done* key. As you enter the option, you will see your entry in the active function area of the display.

NOTE You must already have entered the license key for the GSM option BAH before you can enter the license key for the EDGE retrofit option 252.

2. Press *License Key*. Enter the letters/digits of your license key. You will see your entry in the active function area of the display. When you have completed entering the license key number, press the *Done* key.
3. Press the *Install Now* key.

   The message "`New option keys become active after reboot.`" will appear. If you want to proceed with the installation, press the *Yes* key and cycle the instrument power off and then on. Press the *No* key if you wish to cancel the installation process.

Using the Uninstall Key

The following procedure removes the license key number for the selected option. This will make the option unavailable for use, and the message "`Application Not Licensed`" will appear in the Status/Info bar at the bottom of the display. Please write down the 12-digit license key number for the option before proceeding. If that measurement personality is to be used at a later date you will need the license key number to reactivate the personality firmware.

ManualsPlus.com

NOTE Using the *Uninstall* key does not remove the personality from the instrument memory, and does not free memory to be available to install another option. If you need to free memory to install another option, refer to the instructions for loading firmware updates located at the URL: **www.agilent.com/find/vsa/**.

1. Press *System*, *More(1 of 3)*, *More(2 of 3)*, *Uninstall*, *Choose Option*. Pressing the *Choose Option* key will activate the alpha editor menu. Use the alpha editor to enter the letters (upper-case) and the front-panel numeric keyboard to enter the digits (if required) for the option, then press the *Done* key. As you enter the option, you will see your entry in the active function area of the display.
2. Press the *Uninstall Now* key after you have entered the personality option. Press the *Yes* key if you want to continue the uninstall process. Press the *No* key to cancel the uninstall process.
3. Cycle the instrument power off and then on to complete the uninstall process.

ManualsPlus.com

Cables for Connecting to the Serial Port (RS-232)

There are a variety of cables and adapters available for connecting to PCs, and printers. Several of these are documented in the following wiring diagrams. You need to find out what connections your equipment uses to identify the cables and/or adapters that you will need.

HP 34398A RS-232 Cable Kit — This kit comes with an RS-232, 9-pin female to 9-pin female null modem/printer cable and one adapter 9-pin male to 25-pin female (HP part number 5181-6641). The adapter is also included in HP 34399A RS-232 Adapter Kit.

HP 34399A RS-232 Adapter Kit — This kit includes four adapters to go from DB9 female cable (HP 34398A) to PC/printer DB25 male or female, or to modem DB9 female or DB25 female.

Figure 1-5 **HP 24542U Cable**

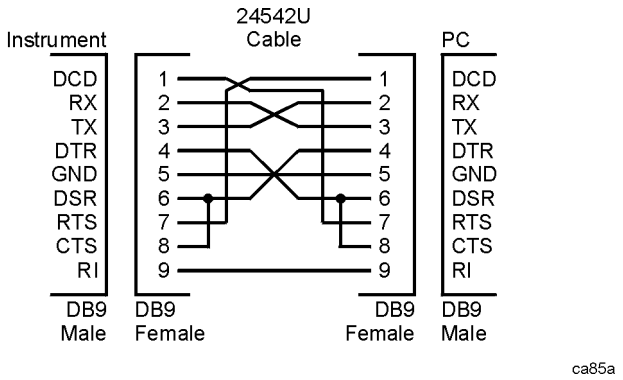

Figure 1-6 **HP F1047-80002 Cable**

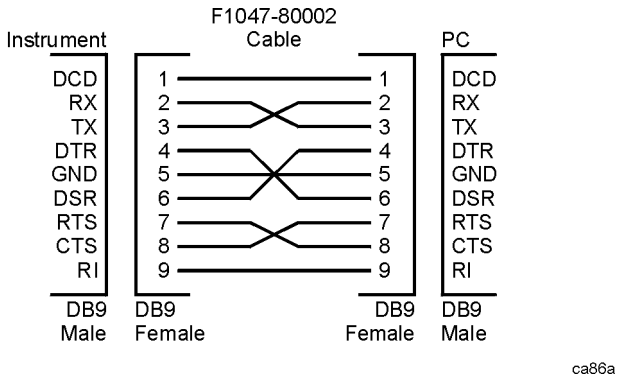

ManualsPlus.com

Figure 1-7 HP 24542G/H Cable

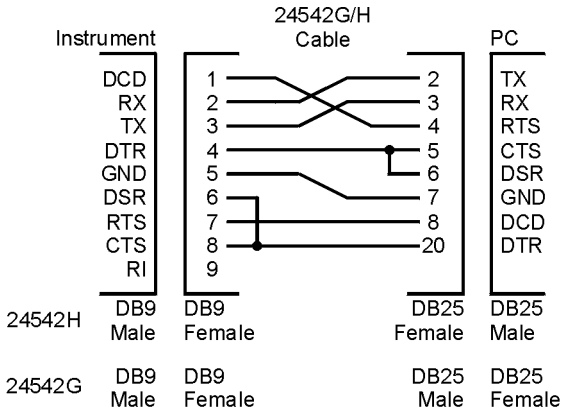

ca87a

Figure 1-8 HP 92219J Cable

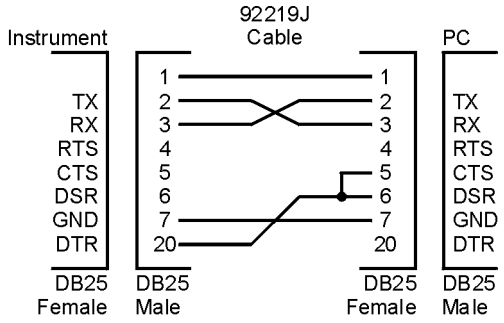

ca83a

Figure 1-9 HP 13242G Cable

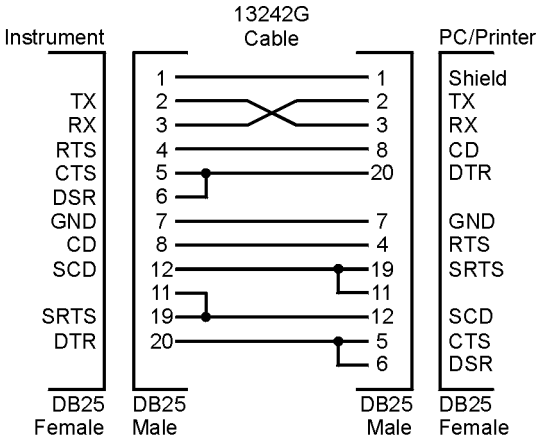

ca84a

ManualsPlus.com

Figure 1-10 HP 24542M Modem Cable

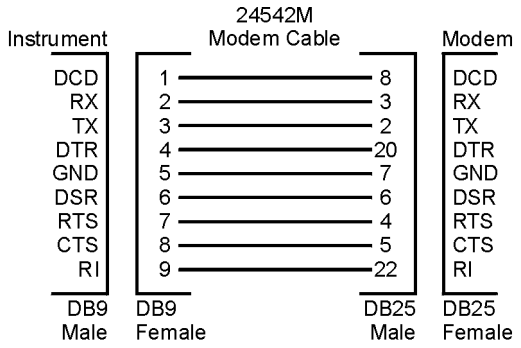

ca88a

Figure 1-11 HP C2913A/C2914A Cable

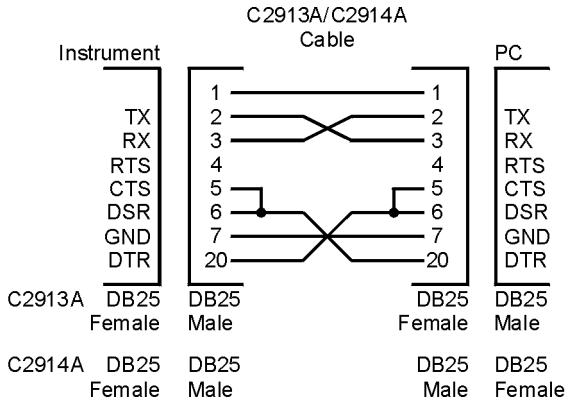

ca89a

Figure 1-12 Mouse Adapter (typical)

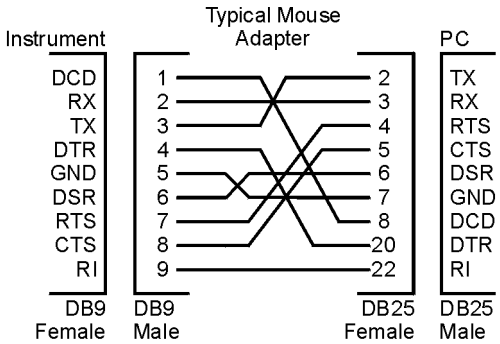

A mouse adapter works well as a
9 pin to 25 pin adapter with a PC.

ca810a

ManualsPlus.com

Figure 1-13 HP 24542U Cable with 5181-6641 Adapter

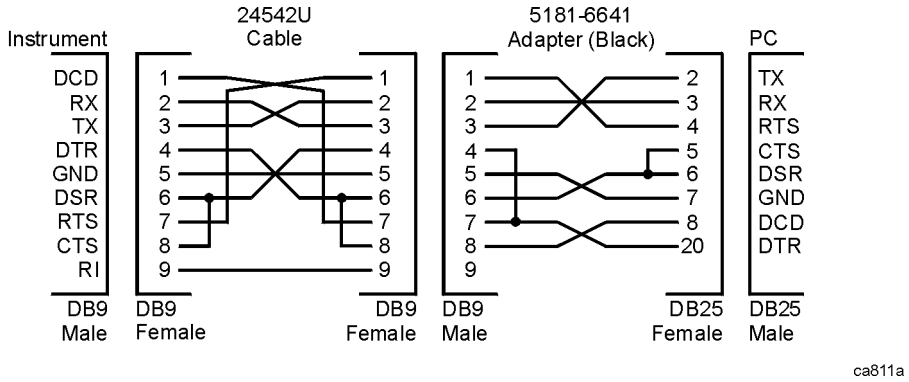

Figure 1-14 HP 24542U Cable with 5181-6640 Adapter

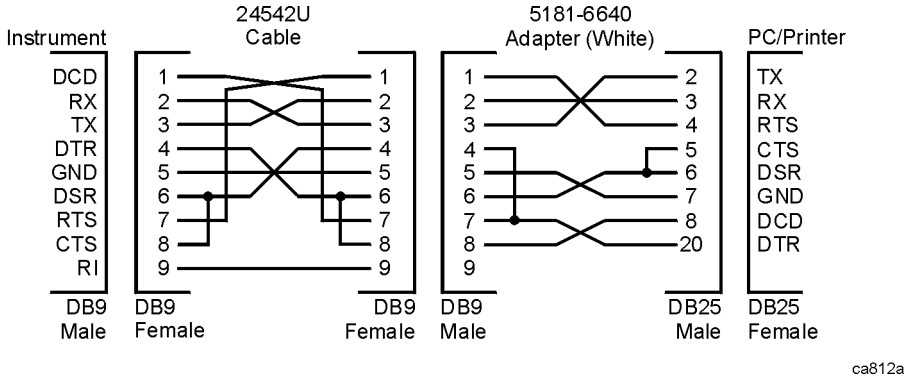

Figure 1-15 HP 24542U Cable with 5181-6642 Adapter

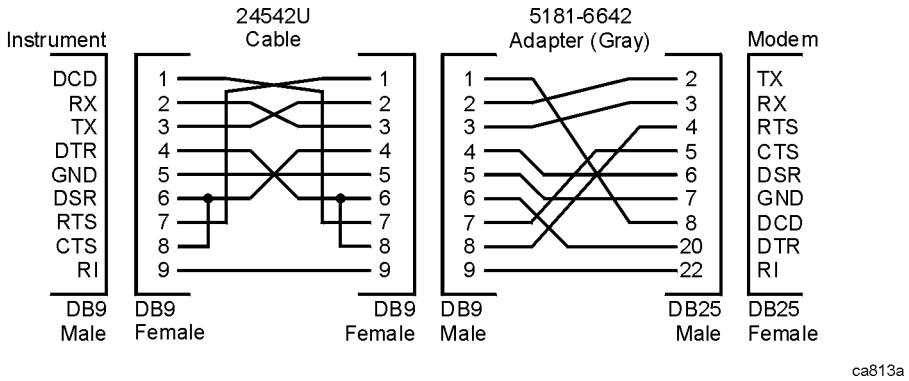

ManualsPlus.com

Figure 1-16 HP 24542U Cable with 5181-6639 Adapter

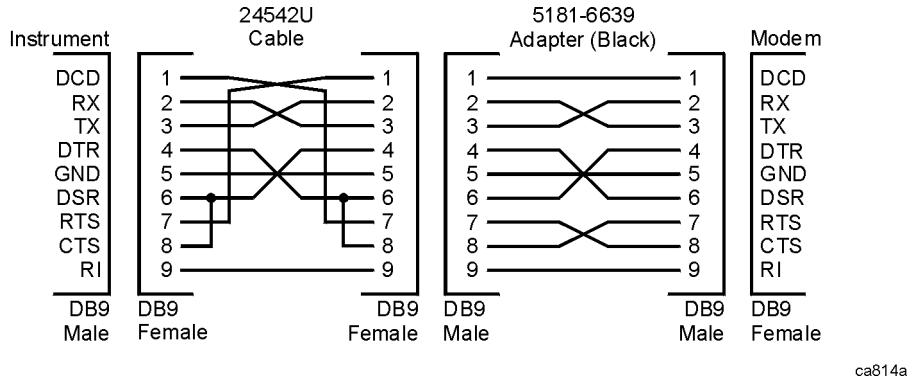

Figure 1-17 HP F1047-80002 Cable with 5181-6641 Adapter

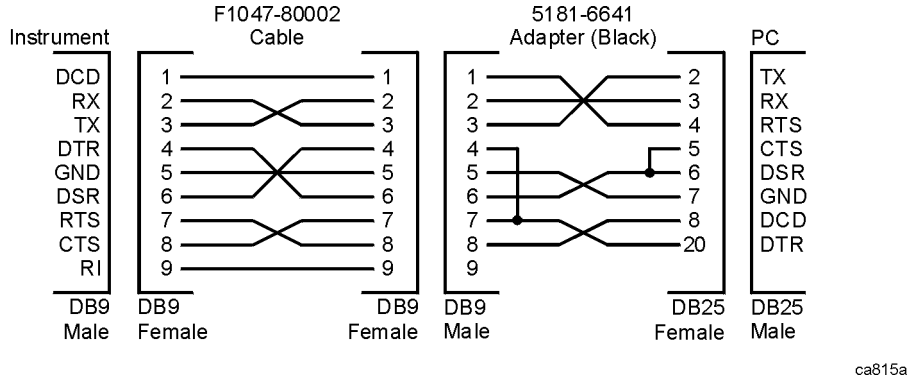

Figure 1-18 HP F1047-80002 Cable with 5181-6640 Adapter

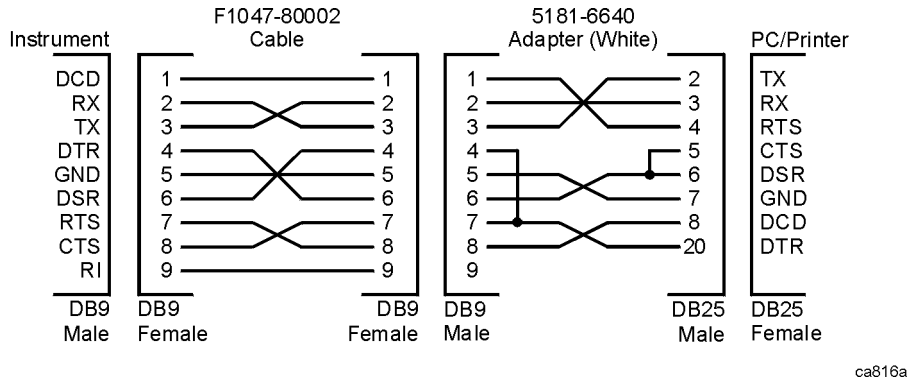

ManualsPlus.com

Figure 1-19 HP F1047-80002 Cable with 5181-6642 Adapter

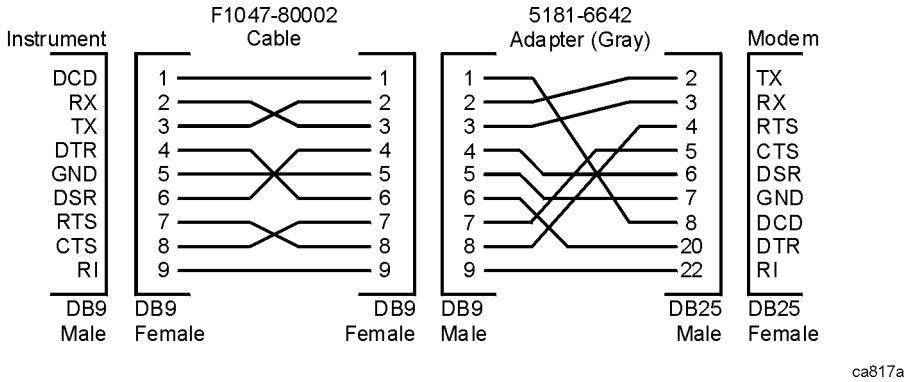

Figure 1-20 HP F1047-80002 Cable with 5181-6639 Adapter

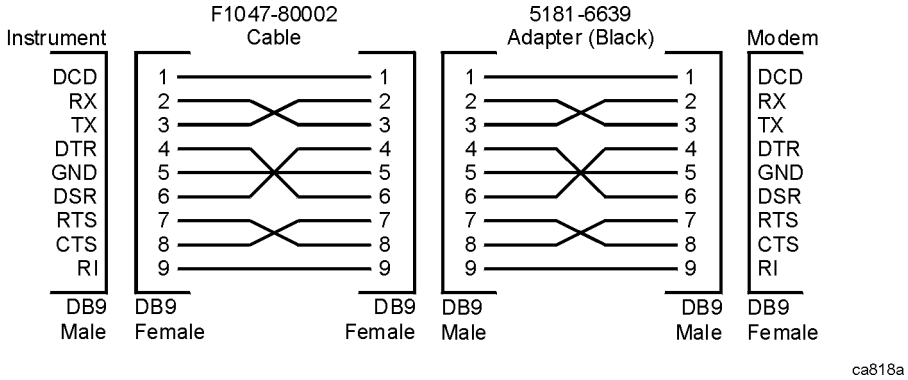

ManualsPlus.com

Safety Considerations

This section covers safety considerations relating to the installation and use of the instrument.

Instrument Installation

Install the instrument so that the detachable power cord is readily identifiable and is easily reached by the operator. The detachable power cord is used to completely disconnect the instrument. The front panel switch is only a standby switch which maintains standby power to some parts of the instrument. It does not disconnect the instrument from the power source. Alternatively, an externally installed switch or circuit breaker (which is readily identifiable and is easily reached by the operator) may be used as a disconnecting device.

The input power ranges for the power supply are 90 to 132 V, or 195 to 250 Vrms. The power supply automatically senses the input power and switches between these two ranges. There is no customer replaceable power fuse.

WARNING **The power cord is connected to internal capacitors that may remain live for 5 seconds after the plug is disconnected from its power supply.**

WARNING **If this product is to be energized via an external autotransformer for voltage reduction, make sure that its common terminal is connected to a neutral (earthed pole) of the power supply.**

CAUTION This instrument has autoranging line voltage input, be sure the supply voltage is within the specified range.

CAUTION VENTILATION REQUIREMENTS: When installing the product in a cabinet, the convection into and out of the product must not be restricted. The ambient temperature (outside the cabinet) must be less than the maximum operating temperature of the product by 4° C for every 100 watts dissipated in the cabinet. If the total power dissipated in the cabinet is greater than 800 watts, then forced convection must be used.

ManualsPlus.com

Instrument Operation and Maintenance

The following warnings explain conditions which affect the safe operation of the instrument.

WARNING **If this instrument is not used as specified, the protection provided by the equipment could be impaired. This product must be used in a normal condition (in which all means for protection are in tact) only.**

WARNING **To prevent electrical shock, disconnect the E4406A from mains before cleaning. Use a dry cloth or one slightly dampened with water to clean the external case parts. Do not attempt to clean internally.**

Explanation of Safety Symbols that are on the Instrument

The following list describes all safety symbols that are on the front and rear panels of the transmitter tester.

The instruction documentation symbol. The product is marked with this symbol when it is necessary for the user to refer to the instructions in the documentation.

This symbol is used to mark the ON position of the power line switch.

This symbol is used to mark the OFF position of the power line switch.

This symbol is used to mark the STANDBY position of the power line switch.

This symbol indicates that the input power required is AC.

This symbol is used to mark the STANDBY/OFF position of the power line switch.

This symbol is used to mark the On position of the power line switch.

ManualsPlus.com

Safety Considerations for Service Personnel

NOTE No one other than qualified service personnel are allowed to remove the cover of the instrument. The following warnings apply to service personnel. These warnings are found on the rear panel of the instrument.

⚠ **To Remove Outer Cover, Remove Strap Handle, 4 Bottom Feet, and 4 Rear Feet.**

⚠ **To Remove CPU Assembly Unplug All Boards Connected to CPU. When Removing CPU Keep Perpendicular with Rear Panel**

ManualsPlus.com

ManualsPlus.com

2 Using System Features

System keys access features that are used with all modes, including alignment, configuring I/O, and file management.

ManualsPlus.com

Using System Keys

System features are accessed through the *System* front panel key. These are features that are not dependent on the currently selected application mode or the particular measurement being made. They apply to all modes and measurements.

The *System* key also performs the LOCAL function. If the instrument was previously being controlled remotely by a computer, pressing the *System* key will reactivate the front panel keys.

Print feature keys are accessed through the front panel *Print Setup* and *Print* keys, which are explained on page 63.

File feature keys are accessed through the *File* and *Save* menu keys, which are explained on page 67.

Each description of a system feature begins with a table that shows the key path for all keys related to that feature.

NOTE Most of the system features are not affected by pressing the *Preset* key or by cycling the instrument power. These features will retain the last value set by the user. Press *System*, *More*, *Restore Sys Defaults*, *Yes* to reset the System parameters back to the factory defaults.

Install and Uninstall

The *Install* and *Uninstall* keys, which enable you to install and remove measurement personalities, are described separately on page 36 of the Getting Started chapter.

ManualsPlus.com

Key Locations

All system, service, and basic features can be located by using the key access table below. The key access path describes the key sequence you enter to access the particular key.

Some features can only be used when specific measurements are active. If a feature is not currently valid the key label for that feature will appear as lighter colored text, will be greyed-out, or will not be displayed at all.

Table 2-1 Key Access Locations

Key	Key Access Path
10 MHz Out	System/Reference/
50 MHz Amptd	MODE/Service/
50 MHz Ref	Input/Input Port/
ADC Dither	Meas Setup/More(1 of 2)/Advanced/ More(1 of 2)/
ADC Range	Meas Setup/More(1 of 2) / Advanced / Note: This feature is used when measure is set to either spectrum or waveform.
Adjust Now	System/Alignments/Align Subsystem/Align 50 MHz Reference/ Note: Requires Password
Advanced	Meas Setup/More(1 of 2)
Align 50 MHz Reference	System/Alignments/Align Subsystem/ Note: Requires Password
Align ADC	System/Alignments/Align Subsystem/
Align All Now	System/Alignments/
Align IF	System/Alignments/Align Subsystem/
Align RF	System/Alignments/Align Subsystem/
Alignments	System/
Align Subsystems	System/Alignments/
All	View/Trace/Trace Display/
Alpha Editor	The Alpha Editor is accessed by following the Menu Access Paths that accompany the following key entries: Choose Option, License Key, and Host Name.
AMPLITUDE/ Y Scale	**Front Panel**
Auto	Meas Setup/More(1 of 2)/Advanced/ More (1 of 2)/Data Packing/

ManualsPlus.com

Table 2-1 Key Access Locations

Key	Key Access Path
Auto	Meas Setup/More(1 of 2)/ Advanced /ADC Range / Note: This feature is used when measurement is set to either spectrum or waveform.
Auto Align	System/Alignments/
AutoPeak	Meas Setup/More(1 of 2)/ Advanced /ADC Range / Note: This feature is used when measurement is set to either spectrum or waveform.
AutoPeakLock	Meas Setup/More(1 of 2)/ Advanced /ADC Range / Note: This feature is used when measurement is set to either spectrum or waveform.
Auto Trig	Mode Setup/ Trigger/ Note: This feature is used when measurement is set to either spectrum or waveform.
Average	View/Traces/ Display Traces/
Average	Meas Setup/ Note: This feature is used when measurement is set to either spectrum or waveform.
Avg Mode	Meas Setup/ Average/ Note: This feature is used when measurement is set to either spectrum or waveform.
Avg Number	Meas Setup/Average/ Note: This feature is used when measurement is set to either spectrum or waveform.
Avg Trace	Marker/More(1 of 2)/ Marker Trace/
Avg Type	Meas Setup/ Average/ Note: This feature is used when measurement is set to either spectrum or waveform.
Band Power	Marker/ Function/
Basic	MODE/
Blackman	Meas Setup/More(1 of 2)/ Advanced/ FFT Window/
Blackman- Harris	Meas Setup/More(1 of 2) /Advanced / FFT Window/ More(1 of 2)/
BMP	Print Setup/Print To: File/File Type
cdmaOne	MODE/
Center Freq	FREQUENCY/Channel/
Choose Option	System/More(1 of 3)/More(2 of 3) /Install/
Choose Option	System/More(1 of 3)/More(2 of 3) /Uninstall/

ManualsPlus.com

Table 2-1 Key Access Locations

Key	Key Access Path
Clear Error Queue(s)	System/Show Errors/
Color Print	Print Setup/Print To: Printer/Printer Type: Custom/Define Custom/Color Printer: Yes
Color Printer	Print Setup/Print To: Printer/Printer Type: Custom/Define Custom
Comb	Input/IF Align Signal/Signal Type/
Config I/O	System/
Corrections	System/Alignments/
Counts	MODE/Basic, Meas Setup
Current	View/Trace/ Trace Display/
Current Trace	Marker/ More(1 of 2)/Marker Trace/
Custom	Print Setup/Print To: Printer/Printer Type
CW	Input/IF Align Signal/Signal Type/
Data Packing	Meas Setup/More(1 of 2)/
Decimation	Meas Setup/More(1 of 2)/ Advanced/More (1 of 2)/
Define Custom	Print Setup/Print To: Printer
Delay	Mode Setup/Trigger/Ext Front/
Delay	Mode Setup/Trigger/Ext Rear/
Delay	Mode Setup/Trigger/RF Burst/
Delay	Mode Setup/Trigger/Video/
Delta	Marker/
Diagnostics	System/More (1 of 3)/ Note: Requires Password
Display	**Front Panel**
Emulated GPIB Name	System/Config I/O/ SICL Server
Emulated GPIB Logical Unit	System/Config I/O/ SICL Server
Emulated GPIB Address	System/Config I/O/ SICL Server
Enter	**Front Panel**
ESC	**Front Panel**

ManualsPlus.com

Table 2-1 Key Access Locations

Key	Key Access Path
Exit Main Firmware	System/ More (1 of 3)/More (2 of 3)/ Install/
Ext Front	Mode Setup/ Trigger/
Ext Rear	Mode Setup/ Trigger/
Fast ACP	Mode/ACP/Meas Setup/More(1 of 2)/
FFT Length	Meas Setup/More(1 of 2)/ Advanced/FFT Size/ Note: This feature is used when measurement is set to spectrum.
FFT Size	Meas Setup/ More(1 of 2)/ Advanced/ Note: This feature is used when measurement is set to spectrum.
FFT Window	Meas Setup/ More(1 of 2)/ Advanced/ Note: This feature is used when measurement is set to spectrum.
File	**Front Panel**
File System	System/More(1 of 3)/ More(2 of 3)/
File Location	Print Setup/Print to File
File Type	Print Setup/Print to File
Flat Top	Meas Setup/More(1 of 2)/ Advanced/ FFT Window/
Frame	MODE/Basic, Meas Setup/Trig Source
Free Run	Meas Setup//Trig Source/
FREQUENCY/ Channel	**Front Panel**
Freq Ref	System/ Reference/
Front Panel Test	MODE/Service/More(1 of 2)/
Function	Marker/ More(1 of 2)/
Gaussian	Meas Setup/More(1 of 2) /Advanced / FFT Window/
GIF	Print Setup/Print To: File/File Type
GPIB Address	System/Config I/O/
GSM	MODE/
Hamming	Meas Setup/More(1 of 2) /Advanced / FFT Window/
Hanning	Meas Setup/More(1 of 2) Advanced / FFT Window/
Help	**Front Panel**
Host Name	System/Config I/O/
IF Align	Input/ Input Port/

ManualsPlus.com

Table 2-1 Key Access Locations

Key	Key Access Path
IF Align Signal	Input/
Image	Print Setup/Print to File
Instrument Name	System/Config I/O/ SICL Server
Instrument Logical Unit	System/Config I/O/ SICL Server
Input	**Front Panel**
Input Atten	Input/
Input Port	Input/
Install	System/More(1 of 3)/ More(2 of 3)/
Install Now	System/ More (1 of 3)/ More (2 of 3)/ Install/
IP Address	System/Config I/O/
I/Q Input Z	Input/
I/Q Waveform	Marker/Trace/ Note: This feature is used when measurement is set to either spectrum or waveform.
K-B 70 dB	Meas Setup/More(1 of 2)/ Advanced / FFT Window/More(1 of 2)/
K-B 90 dB	Meas Setup/More(1 of 2)/ Advanced / FFT Window/More(1 of 2)/
K-B 110 dB	Meas Setup/More(1 of 2)/ Advanced / FFT Window/More(1 of 2)/
Landscape	Print Setup/Print To: Printer/Printer Type: Custom/Orientation
Language	Print Setup/Print To: Printer/Printer Type: Custom/Define Custom
Length Ctrl	Meas Setup/More(1 of 2)/ Advanced/FFT Size/ Note: This feature is used when measurement is set to spectrum.
Level	Mode Setup/Trigger/Ext Front/
Level	Mode Setup/Trigger/Ext Rear/
License Key	System/ More (1 of 3)/ More (2 of 3)/ Install/
Line	Meas Setup/ Trig Source/
Load State	File/
Local *(System)*	Note: Press the front panel *System* key to change from remote to local control of the instrument
Log-Pwr Avg	Meas Setup/Average/Avg Type/

ManualsPlus.com

Table 2-1 Key Access Locations

Key	Key Access Path
Long	Meas Setup/More(1 of 2)/ Advanced/ More (1 of 2)/ Data Packing/
Manual	Meas Setup/More(1 of 2)/ Advanced /ADC Range/ Note: This feature is used when measurement is set to either spectrum or waveform.
Marker	**Front Panel**
Maximum Connections	System/Config I/O/ SICL Server
Mrkr All Off	Marker/More(1 of 2)/
Maximum	Meas Setup/ Average/ Avg Type/
Max Total Pwr	Input/
Measure	**Front Panel**
Meas BW	MODE/Basic, Meas Setup
Meas Control	**Front Panel**
Meas Interval	MODE/Basic, Meas Setup
Meas Setup	**Front Panel**
Medium	Meas Setup/More(1 of 2)/Advanced/ More (1 of 2)/Data Packing/
Minimum	Meas Setup/Average/ Avg Type/
Min Pnts/ RBW	Meas Setup/More(1 of 2)/ Advanced/FFT Size/ Note: This feature is used when measurement is set to spectrum.
MODE	**Front Panel**
Mode Setup	**Front Panel**
Next Window	**Front Panel**
Noise	Marker/ Function/
Normal	Marker/
Off	Marker/
Orientation	Print Setup/Print To: Printer
Pause	Meas Control
PCL3	Print Setup/Print To: File/File Type
PCL5	Print Setup/Print To: File/File Type
Peak Level	Mode Setup/ Trigger/ RF Burst/

ManualsPlus.com

Table 2-1 Key Access Locations

Key	Key Access Path
Power Stat CCDF	*MODE/Basic, Meas Setup*
Portrait	Print Setup/Print To: Printer/Printer Type: Custom/Orientation
Pre-ADC BPF	Meas Setup/ More(1 of 2)/ Advanced/ Note: This feature is used when measurement is set to either spectrum or waveform.
Pre-FFT BW	Meas Setup/ More(1 of 2)/ Advanced/ Note: This feature is used when measurement is set to spectrum.
Pre-FFT Fltr	Meas Setup/ More(1 of 2)/ Advanced/ Note: This feature is used when measurement is set to spectrum.
Print	**Front Panel**
Printer	Print Setup/
Printer Type	Print Setup/Print To: Printer
Print Setup	**Front Panel**
Prints/Page	Print Setup/ Print To: Printer
Print To	Print Setup/
Pulse	Input/IF Align Signal/Signal Type/
Pwr Avg (RMS)	Meas Setup/Average/Avg Type/
Pwr vs Time	MODE/Service/
RBW Filter	Meas Setup/ More(1 of 2)/ Advanced Note: This feature is used when measurement is set to spectrum.
Reference	System/
Ref Position	AMPLITUDE/Y Scale/ for spectrum or waveform - or - SPAN/XScale/ for waveform.
Ref Values	AMPLITUDE/Y Scale/ for spectrum or waveform - or - SPAN/XScale/ for waveform.
Res BW	Meas Setup/ Note: This feature is used when measurement is set to either spectrum or waveform.
Restart	**Front Panel**
Restore Align Defaults	System/Alignments/
Restore Meas Defaults	Meas Setup/ More(1 of 2)
Restore Sys Defaults	System/ More(1 of 3)/ More (2 of 3) /

ManualsPlus.com

Table 2-1 Key Access Locations

Key	Key Access Path
Return	**Front Panel**
RF	Input/Input Port/
Align RF	System/Alignments/Align Subsystem/
RF Burst	Mode Setup/ Trigger/
RF Envelope	View/Trace/ Note: This feature is used when measurement is set to waveform.
RF Envelope	Marker/Trace/ Note: This feature is used when measurement is set to waveform.
RF Inp Level	System/Alignments/Align Subsystem/ Align 50 MHz Reference/
Save	**Front Panel**
Save State	File/ or Save/
Scale Coupling	AMPLITUDE/Y Scale/ for spectrum or waveform - or - SPAN/XScale/ for waveform.
Scale/Div	AMPLITUDE/Y Scale/ for spectrum or waveform - or - SPAN/XScale/ for waveform.
SCPI LAN	System/Config I/O/
Search	**Front Panel**
Select	Marker/
Sensors	MODE/Service/
Server	System/Config I/O/ SICL Server
Service	MODE/
Service Password	System/More(1 of 3)/Show System/
Shape	Marker/More (1 of 2)/
Short	Meas Setup/More(1 of 2)/ Advanced/More (1 of 2)/Data Packing/
Show Errors	System/
Show System	System/More(1 of 3)/
SICL Server	System/Config I/O/
Signal Amptd	Input/IF Align Signal/
Signal Rate	Input/IF Align Signal/
Signal Type	Input/IF Align Signal/

ManualsPlus.com

Table 2-1 Key Access Locations

Key	Key Access Path
Slope	Mode Setup/Trigger/Ext Front
Slope	Mode Setup/Trigger/Ext Rear/
Slope	Mode Setup/Trigger/RF Burst/
Slope	Mode Setup/Trigger/Video/
Socket Port	System/Config I/O/ SCPI Lan
Span	Meas Setup/
SPAN/ X Scale	**Front Panel**
Spectrum	View/Trace/ Note: This feature is used when measurement is set to spectrum.
Spectrum	Marker/Trace/ Note: This feature is used when measurement is set to spectrum.
Spectrum Avg	Marker/Trace/ Note: This feature is used when measurement is set to spectrum.
Spectrum (Freq Domain)	MODE/Service/
Spectrum (Freq Domain)	MODE/Basic/
Store Abs Ampl to EEROM	System/Alignments/Align Subsystem/ Align 50 MHz Reference/
Subnet Mask	System/Config I/O
Sweep Time	Meas Setup/ Can be accessed when measure is set to waveform.
System	**Front Panel**
Telnet Port	System/Config I/O/ SCPI Lan
Timebase Freq	MODE/Service/
Trace	Marker/
Trace Display	View/Trace/
Trigger	Mode Setup/ Note: This feature is used when measurement is set to either spectrum or waveform.
Trig Holdoff	Mode Setup/ Trigger/ Note: This feature is used when measurement is set to either spectrum or waveform.

ManualsPlus.com

Table 2-1 Key Access Locations

Key	Key Access Path
Trig Source	Meas Setup/ Note: This feature is used when measurement is set to either spectrum or waveform.
Uniform	Meas Setup/More(1 of 2)/Advanced / FFT Window/
Uninstall	System/ More (1 of 3)/ More (2 of 3)/
Uninstall Now	System/ More (1 of 3)/ More (2 of 3)/ Uninstall/
Verbose	System/Show Errors/
Video	Mode Setup/ Trigger/
View/Trace	**Front Panel**
Visible Align	System/Alignments/
Voltage Avg	Meas Setup/Average/ Avg Type/
Waveform (Time Domain)	MODE/Basic/
Waveform (Time Domain)	MODE/Service/
WindowLength	Meas Setup/More(1 of 2)/ Advanced/FFT Size/ Note: This feature is used when measurement is set to spectrum.
WMF	Print Setup/Print To: File/File Type
Zoom	**Front Panel**

ManualsPlus.com

Using Print and Print Setup Functions

Keys in the *Print Setup* menus enable you to print displayed screen images to a variety of printers, as a file in a variety of formats to the C: drive flash memory, or to the built-in floppy disk drive. The *Print* key is used to execute choices made in the *Print Setup* menus.

Printing a Displayed Screen

1. Connect a compatible printer via the parallel port on the rear panel.
2. Press *Print Setup*, then toggle the *Print To* key to select *Printer*.
3. Press *Printer Type*, then select **Custom**.
4. Press **Define Custom**, then select a *Language,* either *PCL3* or *PCL5*. (In general, modern laser printers use PCL5 while inkjet printers use PCL3.)
5. Select **Color Printer** *Yes / No* depending on the capability of the printer.
6. If your printer uses **PCL5** you can select **Orientation**, then **Portrait** or **Landscape** as appropriate. The orientation feature is unavailable with **PCL3** printers, which always default to portrait orientation.
7. Toggle **Color Print** - *On/Off* to enable or disable color printing once the *Color Printer* key (see above) is set to *Yes*.
8. Toggle *Prints /Page (1 or 2)* to select to print either one image (in portrait orientation) covering half a page, or two images (in portrait orientation), each covering half the page.
9. Press the *Print* key. A copy of the current display screen will be sent to the printer according to the parameters set above.
10. If you want to reprint the most recently printed page, press **Reprint**.
11. If you want to eject a page from a compatible printer, toggle *More (1 of 2),* then **Eject Page**.
12. If a printer failure occurs (for example, if the printer hangs up), press *Reset Printer*. It may also be necessary to cycle printer power.

ManualsPlus.com

The following table illustrates the *Print Setup* menu. Level 1 shows key choices available when the front panel key is pressed. Level 2 shows key choices available when *Print To* is set to *Printer* and Level 1 keys are pressed.

Front Panel Key	**Level 1**	**Level 2**
Print Setup	*Print To* with *Printer* selected	
	Printer Type	*None*
		Custom
	Define Custom	*Language PCL3/PCL5*
		Color Printer Yes/No
	Orientation (Only active for PCL5 language; printers with PCL3 language default to portrait orientation)	*Portrait*
		Landscape
	Color Print (Only active when *Color Print* is set to *Yes*- see above.)	*On/Off*
	Prints/Page 1 / 2	
	More (1 of 2)	
	Reprint (Only active after initial printing.)	
	Eject Page	
	Reset Printer	
	More (2 of 2)	

ManualsPlus.com

Printing a Screen Image to a File on A: or C: Drives

1. Press *Print Setup*, *Print To*. Toggle the *Print To* key to select *File*.
2. Press the *File Type* key, then select between gif, bmp, and wmf formats.
3. To print a file to the floppy drive, toggle the *File Location* key to *A:* and insert a 3.5” HD floppy disc, formatted for MS-DOS, into the front panel disk drive.

   To print a file to the internal flash memory, toggle the **File Location** key to *C:*.
4. Select the **Image** format to be stored on the disk. Use *Normal* to store an image that is identical to the currently displayed image, with a black background. Use **Invert**, which provides a a light background with a dark trace, to minimize ink and toner consumption.
5. Press **HCOPy Dest**, then select *Printer*. This enables you to generate up to six files containing screen images.

   Note: if *HCOPy Dest* is set to *FPanel* only one file can be saved to memory or a floppy disk. Any subsequent screen files will overwrite the file currently saved in the A: or C: drives. For these reasons, **Printer** is usually the preferred selection.
6. Press the front panel *PRINT* key. If you have set *HCOPy* to *Printer,* six filenames will appear in the softkeys: screen1.xxx, screen2.xxx, screen3.xxx, screen4.xxx, screen5.xxx, and screen6.xxx (the xxx extension will be gif, bmp, or wmf, depending on the file type selected in *File Type*). The destination drive name will also be displayed.

   Press the appropriate screen#.xxx key. Files written to the A: drive will be located at A:`screen#.xxx`. Files written to the C: drive may be accessed by the following path: **`/users/ftp/pub/screen#.xxx`**. Six files may be stored at the same time to either location. Any subsequent files stored to the same filename will overwrite the existing file
7. The disk may be removed from the A: drive once the LED on the disk drive is off. Any files you have saved are now available to be printed through use of an external computer and printer, or to be imported into an electronic document.

   Files located on the C: drive may be retrieved over the LAN by `ftp` with the use of an external computer.

ManualsPlus.com

The following table illustrates the keys used and key choices available to print a screen image to either the A: internal floppy disk drive or the internal C: drive flash memory. Level 1 shows key choices available when the front panel key is pressed. Level 2 shows key choices available when *Print To* is set to *File* and Level 1 keys are pressed.

Front Panel Key	**Level 1**	**Level 2**
Print Setup	*Print To* with *File* selected	
	File Type	*GIF*
		BMP
		WMF
	File Location A:/C:	
	Image Invert/Normal	
	HCOPy Dest FPanel/Printer	*= Print to Key*
		Printer
Print	(the six screen files shown below are available only when *HCOPy Dest* is set to *Printer.*)	
	screen1.xxx (xxx depends on *File Type*)	
	screen2.xxx	
	screen3.xxx	
	screen4.xxx	
	screen5.xxx	
	screen6.xxx	

ManualsPlus.com

Using File and Save Keys

The *File* and *Save* keys enable you to save instrument states to memory and to load instrument states into the instrument from memory. For instructions on how to save a screen image to a floppy disc, see Saving a Screen Image to a Floppy Disc on page 63.

Front Panel Key	Level 1	Level 2	Level 3
File	*Load State*	numeric entry	*Enter*
	Save State	numeric entry	*Enter*
Save	numeric entry	*Enter*	

Loading a State

1. Press *File*, **Load State**. A label in the active function area will read `Load State`.
2. Use the numeric keypad to enter the number of the register from which you desire to retrieve a state (you can retrieve states from registers 0 to 19), then press the *Enter* key.

Saving a State

1. Press *File*, **Save State** or press the front panel *Save* key. An active function labeled `Save State` will appear.
2. Use the numeric keypad to enter the desired state number (you can enter values from 0 to 19), then press the *Enter* key.

ManualsPlus.com

Using the Alpha Editor Keys

The alpha editor enables you to enter text. All text entries are displayed in the active function area.

Level 1	Level 2	Level 3	Example
ABCDEFG	*abcdefg*	*():;,'*	*V*
HIJKLMN	*hijklmn*	*_!? ~*	*W*
OPQRSTU	*opqrstu*	*+ - * / <> =*	*X*
VWXYZ	*vwxyz*	*|/\{} []*	*Y*
Done	*Done*	*@ # $% ^ &*	*Z*
Space	*Space*	*Space*	
More (1 of 3)	*More (2 of 3)*	*More (3 of 3)*	

1. Pressing a key that requires you to enter a string gives you access to the alpha editor. *Choose Option*, *License Key*, and *Host Name* are some of those keys. When one of these keys is pressed, you will see the menu which is shown in level 1 of the table above.
2. To enter an upper case letter, press the key which contains the letter you wish to select. In the example table above, pressing *VWXYZ* lets you select the key labelled upper case *Y*. The Y will then appear in the active function area. Press *More (1 of 3)* to access the lower case letters and *More (2 of 3)* to access mathematical symbols and punctuation marks.
3. To enter a digit, 0 through 9, use the numeric keypad.
4. To enter a space, press the *Space* key, which is available on both the letters and the symbols **Alpha Editor** menus.
5. Press the *Return* front panel key to return to the previous menu without entering characters.
6. If you need to correct a character you have entered, you can use the backspace key to move the cursor in the active function area to the character you need to correct.
7. Once you have completed entering all characters, press the *Done* key.
8. Pressing the *ESC* key at any time prior to pressing the *Done* key will clear the new entry and leave the previous entry unchanged.

ManualsPlus.com

Using Input/Output Configuration Keys

There are several keys available to help configure the instrument front panel and rear panel inputs/outputs. These include the various buses, external reference, and other types of I/O.

Configuring I/O

Press *System*, Config I/O to access keys and menus that enable you to identify and change the current GPIB address, to identify and change various LAN settings.

Front Panel Key	Level 1	Level 2	Level 3/Entry
System	*Config I/O*	*GPIB Address*	
		IP Address	
		Host Name	*Alpha Editor*
		Subnet Mask	
		SCPI LAN	*Telnet Port*
			Socket Port
		SICL Server	*Server*
			Maximum Connections
			Instrument Name
			Instrument Logical Unit
			Emulated GPIB Name
			Emulated GPIB Logical Unit
			Emulated GPIB Address
		Ethernet Addr	

- **GPIB Address** - Shows the current GPIB address (18 is the default setting) and allows you to change this value. The new value is displayed in the active function area. The GPIB port is always active.

ManualsPlus.com

- **IP Address** - Changes the IP (internet protocol) address, domain name and node (host) name for the instrument. The IP address of the instrument can be changed by entering a numeric address composed of numbers and decimal points.
- **Host Name** - Displays the host name of the instrument. Pressing the key activates the alpha editor, which enables you to change the host name. However, this will not change your LAN system representation of the host name. You must work through your local system administrator to change the host name. Changing it in the instrument only changes the displayed information, it will not enable LAN access with the new name.
- **Subnet Mask** - Changes the subnet mask of the instrument. The subnet mask is a 32-bit address mask used in IP networks to indicate the bits of an IP address that are used for the subnet address. The default address is 255.255.0.0 for a class B network.
- **SCPI LAN** - Accesses the following keys:

  Telnet Port - Turns on or off telnet programming over the LAN. This key only affects new connections, not existing connections. Enter the port number that you will use for your telnet connection to the transmitter tester. The default port number is 5023.

  Socket Port - Turns on or off socket programming over the LAN. This key only affects new connections, not existing connections. Enter the port number that you will use for your socket connection to the transmitter tester. The default port number is 5025.

- **SICL Server** - Accesses the following keys. These keys are provided for information only. The “value” of the settings cannot be changed.

  Server - Indicates the on/off condition of the SICL IEEE 488.2 protocol LAN server.

  Maximum Connections - Shows you the maximum number of connections that can be accessed simultaneously. The default is 5.

  Instrument Name - Shows you the name (same as the remote SICL address) of your transmitter tester. The default is `inst0`.

  Instrument Logical Unit - Shows you the unique integer assigned to your transmitter tester when using SICL LAN. The default is 8.

  Emulated GPIB Name - Shows you the name (same as the remote SICL address) of the device used when communicating with your transmitter tester. The default is `gpib7`.

  Emulated GPIB Logical Unit - Shows you the unique integer assigned to your device when it is being controlled using SICL LAN. The default is 8.

ManualsPlus.com

Emulated GPIB Address - Shows you the emulated GPIB address assigned to your transmitter tester when it is a SICL server. This address is set using the *GPIB Address* key.

Ethernet Addr - Shows the Ethernet address. This is an information only feature that can not be modified by the user.

NOTE For more information about these and other remote programming features, refer to the programmer's guide for your transmitter tester.

File System

Press *System*, *More (1 of 3)*, *More (2 of 3)* to access the *File System* key. The label of the *File System* key shows the current amount of `Used` memory and `Free` memory in units of megabyte (MB).

Reference

Press the **Reference** menu key to activate a menu which allows you to select an external reference, or to deactivate a 10 MHz out signal on the rear panel.

Front Panel Key	Level 1	Level 2	Toggle	Entry
System	*Reference*	*Freq Ref*	Int/Ext	When toggled to Ext, enter any value between 1 and 30 MHz
		10 MHz Out	Off/On	

- **Freq Ref** - Allows you to select an external or an internal (the default) reference. When toggled to Ext (external) you will set the external reference frequency by entering a value between 1 and 30 MHz. When the instrument is locked to an external reference a green Ext Ref indicator will appear in the annunciator bar.

NOTE External reference values are persistent. This means that the external reference frequency you select will remain active until it is changed, even if the instrument is turned off and on, or preset. If the frequency you have input to the rear panel external frequency connector is not the same as the external frequency value you have manually set, a red Ext Ref error indicator and a red Unlock error indicator will appear in the annunciator bar.

ManualsPlus.com

- **10 MHz Out** - Activates, or deactivates, the 10 MHz out signal on the rear panel of the instrument. The 10 MHz out can be used to lock other test equipment to the same frequency reference that is used by the transmitter tester. Once activated, the 10 MHz out feature is persistent, so if it is set to On it will remain on, even if the instrument has been preset, or powered off and then on.

ManualsPlus.com

Using System Configuration and Alignment Keys

There are number of different keys that can help you with understanding the current instrument configuration and for hardware alignment.

NOTE Some features are intended for use only by service personnel and cannot be accessed without a service password. If after pressing a key a message appears requesting entry of a password, you should understand this to indicate that this feature is meant for service use only. The password is not available unless the user has purchased the service guide.

Restore System Defaults

Press *System*, *More (1 of 3)*, *More (2 of 3)* to access the *Restore Sys Defaults* key. There are some instrument functions that stay set to the last value that you selected even if you press the instrument preset key or turn the power off and on. The *Restore Sys Defaults* key allows you to preset those functions back to the original factory settings.

NOTE Pressing this key will preset functions like the GPIB/IP address, external reference/trigger settings and auto-alignment selection. You will have to reset these items to return to the your previous setup.

Show Errors

Press *System*, **Show Errors** to activate a menu with features that enable you to move around in the error history queue, and to clear the error queue.

Front Panel Key	Level 1	Level 2
System	*Show Errors*	*Top Page*
		Last Page
		Next Page
		Prev Page
		Clear Error Queue(s)
		Verbose

ManualsPlus.com

- **Clear Error Queue(s)** - The error history queue retains and displays all errors once they have been detected, even if they are no longer detected after a period of time has elapsed. After reviewing the error queue you will likely want to clear it before making another measurement. Note that if an error condition exists continuously, the error will not appear in the queue after the error history queue has been cleared.
- **Verbose** - When an error is made in using the instruments programming commands, the verbose feature displays the command in which an error has been detected. An error indicator will appear in the diaplayed command line immediately following the entry that caused the error. This feature can help you troubleshoot programming problems.

You can exit the error history queue display to return to a measurement display by pressing the *ESC* or the *Return* key.

Show System

Press *System*, *More (1 of 3)*, *Show System* to access the two-page show system display. The first page shows firmware and option information (see Figure 2-1). Press *More (2 of 3)* to access the second page, which shows option and hardware status information (see Figure 2-2).

Under the *Show System* menu is a key that enables you to enter a password, and four information-only keys, in a lighter font, that show the serial number, model designation, firmware revision, and host ID for your instrument.

NOTE Diagnostics features require a service password. The password is only available if the service guide has been purchased. All service diagnostic features are described in the service guide.

Front Panel Key	Level 1	Level 2
System	*Show System*	*Service Password*
		Model
		Serial Number
		Firmware Rev
		Host ID
		Next Page
		Prev Page
	Diagnostics	

ManualsPlus.com

The display lists all the measurement options/modes available at the time the firmware was installed or upgraded. It shows whether or not the code for each option is currently installed in memory. It may not be possible to fit all the options into your available memory. Hardware information includes the name of boards along with part, serial number, and revision information.

The display also indicates whether you have the license key installed that gives you access to a particular option/mode. It is possible to have the license key installed but not have the program code, or to have the program code with no license key. Either situation will prevent the option from running.

Show System Displays

Figure 2-1 Firmware and Option Information (first page)

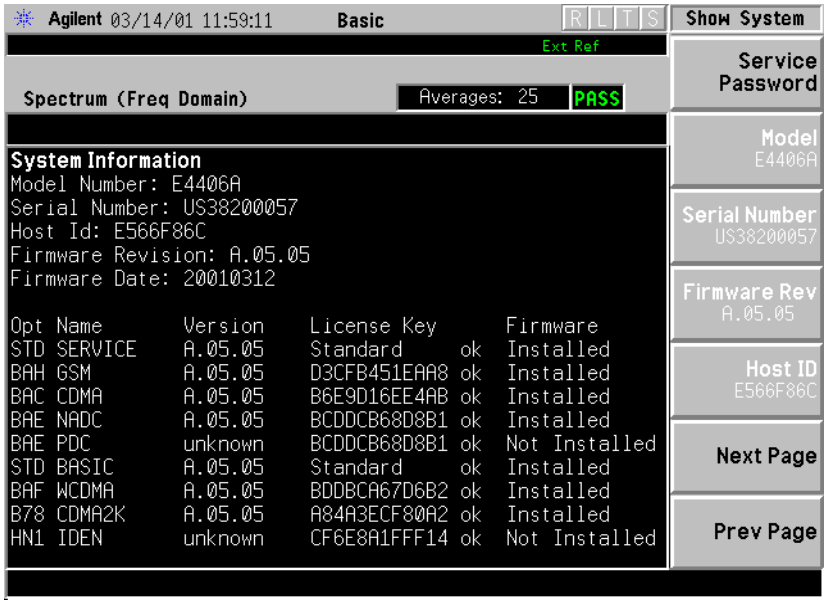

ManualsPlus.com

Figure 2-2 Option and Hardware Information (second page)

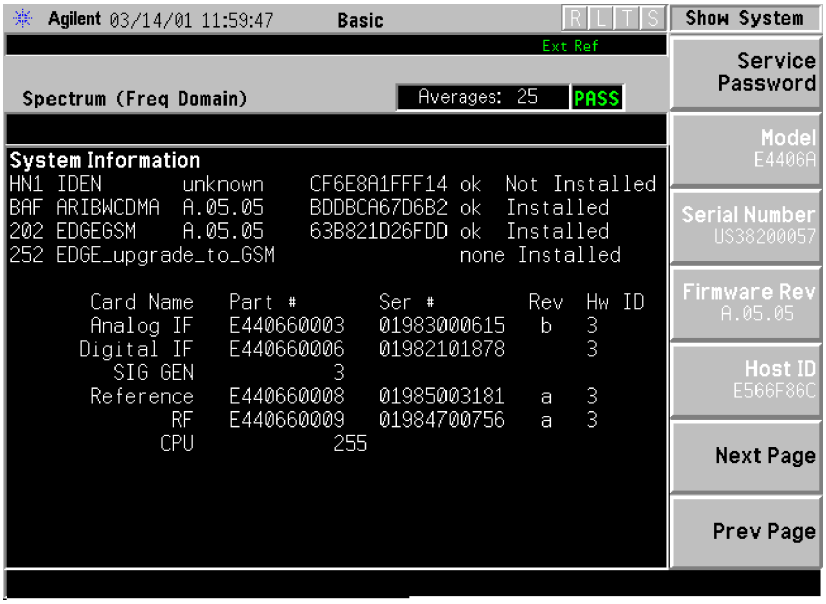

System (Local)

Pressing the *System* front panel key will return the instrument to local control if the instrument was in remote mode being controlled by an external computer.

ManualsPlus.com

Alignment

Press *System*, **Alignments** to access menus which enable you to align the instrument. Press the **ESC** key to stop any alignment. The table below diagrams the paths through which you will access alignment feature keys. The feature in the cell that is greyed-out requires a password.

Front Panel Key	Level 1	Level 2	Level 3
System	*Alignments*	*Auto Align*	On/Alert/Off
		Align All Now	
		Align Subsystems	*Align RF*
			Align IF
			Align ADC
			Align 50 MHz Reference
			Align Current IF Flatness
			Align Current Sysgain
		Corrections	On/Off
		Time Corr	Auto/On/Off
		Restore AlignDefaults	
		Visible Align	Off/Low/High

Auto Align - Defaults to the alert state. When set to Alert, the auto align feature causes a message to appear 24 hours after the last alignment to alert tell you that the instrument needs to be aligned. This message will also appear if there is a change of ambient temperature greater than ± 3° C. Use the *Align All Now* key.

When set to the On state an alignment (which slows down measurements) automatically occurs every 5 minutes or when a change in ambient temperature of greater than ± 3° C has occurred.

- **Align All Now** - Immediately activates an alignment on all of the instrument's standard RF, IF, and ADC alignments. All other operations are stopped and the alignments progress will be visible on the display.

ManualsPlus.com

Align Subsystem - Allows you to activate one or a group of the standard internal instrument alignments. Perform alignments on circuitry relating to the following internal alignments. Press the *ESC* key to cause any alignment to stop.

Align RF - Activates an alignment on the RF circuitry.

Align IF - Activates an alignment on the IF circuitry. The main gain of the Analog IF is used to compensate for prefilter BW gain variations so the gain of the entire IF path before the A/D remains constant.

Align ADC - Activates an alignment on the ADC circuitry.

Align 50 MHz Reference - Enables a service technician to adjust the amplitude of the internal 50 MHz reference signal for absolute amplitude accuracy. The test equipment and the adjustment procedure required are described in the E4406A service guide.

NOTE The Align 50 MHz reference feature can only be activated if you have a service password. The password is not available unless the user has purchased the service guide.

Align Current IF Flatness - Activates an immediate measurement of the current IF flatness, for FFT spectral amplitude compensation. Normally this alignment occurs in the background when the instrument bandwidth is changed. Given the current BW and Gain DAC settings for a measurement, alignment is done using the comb calibration signal. The relative amplitude of combs within the BW are compared to expected amplitudes to generate the effective shape of the current IF path.

If Time Corrections are active, this alignment generates complex IF responses (magnitude and phase) rather than just the original scalar (magnitude) response. The complex alignment requires reasonable delay estimation, and improved trigger compensation so the phase response of several averaged measurements can be unwrapped properly.

Align Current SysGain - Activates a fine-tuning adjustment of the system gain. This is done by measuring the response of the current system state configuration to the 50 MHz amplitude reference signal. All subsequent measurements are then compensated appropriately for absolute amplitude accuracy. Normally this occurs in the background when the instrument bandwidth is changed.

ManualsPlus.com

- **Corrections** - When set to On (the default state), the alignment firmware applies many numerical corrections to improve amplitude accuracy of the measurement. This includes an absolute amplitude adjustment at center frequency, and IF flatness correction for FFT spans (spectral measurements). When corrections are Off, the background alignments which determine corrections are disabled. Corrections is a background feature which runs automatically, while the instrument is on.
- **Time Corr** - Time corrections are the application of a complex filter directly onto the time capture data. It compensates for the complex (magnitude and phase) response of the analog and digital IF hardware. Time corrections are less efficient (take more CPU cycles) than frequency corrections when only scalar (magnitude) FFT flatness is required, but for demod or other time-based (not FFT) measurements, only time corrections can improve the flatness of imperfect IF hardware. If the time correction functionality is set to Auto (the default), the individual measurements activate the corrections when they are needed.
- **Restore Align Defaults** - Restores the instrument's align defaults. This feature will only be needed if the instrument calibration locks up, which may occur as a result of hardware problems. Once the defaults are restored a message will appear informing you that alignment is needed.
- **Visible Align** - When toggled to Off, the alignment traces which are visible in the display during an alignment will be turned off, and the alignment process will take less time. When set to High, every alignment trace is shown, resulting in the alignment taking more time than when *Visible Align* is set to Low (the default state), where one out of ten traces is shown. Note that text showing alignment results is displayed on screen when any alignment is activated, even when the visible alignment is set to Off.

ManualsPlus.com

ManualsPlus.com

3 Setting the Mode

A set of mode parameters such as input and trigger settings applies to each mode. These settings affect all measurements and measurement setup parameters in the current mode.

ManualsPlus.com

Selecting a Mode

The *Mode* menu key is used to select the measurement personality you have purchased with your instrument, or to select the basic or service modes, which are native to the instrument. Upon turn-on the instrument will default to the basic mode.

- **Mode** - Accesses the measurement personality mode. Press the key that corresponds to the mode you want to select, such as **GSM** or **cdmaOne**. For a full explanation of the personality mode you have purchased, see the documentation which comes with that option.
- **Basic** - This mode is useful for making measurements that are not preset to industry standards. They can be used for troubleshooting your devices. Press *Mode*, *Basic* to switch to the basic mode, and bring up the measurements menu. For more information on these measurements go to "Basic Measurements" on page 88.
- **Service** These features will help you check the functionality of your instrument. Press *Mode*, *Service*, to switch to the service mode, and bring up the service measurements menu. Features accessed through this menu include tests which check the timebase frequency, the sensors on the RF board, and the functionality of the front panel keys. For more information on these features go to "Service Measurements" on page 141.

  The basic waveform and spectrum measurements are available as well as a power vs time measurement which is used only for self-diagnostic purposes. The measurement setup parameters that you select while in Service mode are only used for service mode. The Basic mode settings are independent. Descriptions of the spectrum and waveform measurements begin on page 97.

Note that spectrum and waveform measurements are available in each personality mode, as well as in the basic and service modes. Each with their own independent mode settings.

Press *Preset* to set the instrument to a known factory default state. This sets all parameters to their factory default values for the selected mode. *Preset* does not switch the modes.

NOTE

Some features are intended for use only by service personnel and cannot be accessed without a password. If after pressing a key, a message appears requesting entry of a password, this means that the feature is meant for service use only. The password is only available through the service guide.

ManualsPlus.com

Mode Setup

When you select a mode the instrument automatically presets settings to defaults for that mode. These defaults apply to all measurements in the mode.

Mode settings are persistent. When you switch from one mode to another mode, the settings you have chosen for the modes will remain active until you change them. This allows you to switch back and forth between modes without having to reset settings each time. Presetting the instrument will return all current mode settings to their default values. Powering the instrument off and on will reset all mode settings to their default values.

NOTE Before making measurements, it is important to set the parameters under the mode setup key for the device to be tested. These parameters are not saved when you preset or power the instrument off and on, so you may want to save them in an instrument state for later use.

The *Mode Setup* key accesses: (1) the *Input* key menu of features including selecting inputs, changing input attenuation, and modifying IF align settings, and (2) the *Trigger* key menu which lets you to choose trigger setup states for the instrument.

Input Keys

By pressing the *Input* key you access menus that select an input port, adjust input attenuation, and adjust the IF align signal.

Activate an Input Port and Adjust Input Power

- **Input Port** key. The *Input Port* menu key accesses a menu which allows you to select one of the following input keys: *RF*, *50 MHz Ref*, and *IF Align*. These keys are explained below.

  RF key. Use the *RF* key to reactivate the RF input after a different input has been activated. This is a 50 Ω connector.

  50 MHz Ref key. Selects the internal 50 MHz CW reference signal. The displayed signal amplitude will be –25 dBm.

  IF Align key. The IF align signal is an internal calibration signal used during the auto align process.

ManualsPlus.com

Adjust Input Attenuation and Input Power.

- **Max Total Pwr** key. The *Max Total Pwr* key can be activated only when *Input Port* is set to *RF*. *Max Total Pwr* allows you to enter maximum power levels (–15 dBm is the default value) for the RF input. The maximum total power setting is coupled to the input attenuation setting.
- *I/Q Input Z* key. The *I/Q Input Z* key can be activated only when *Input Port* is set to *I/Q*. The *I/Q Input Z* key enables you to choose an input impedance of either 50 Ω or 600 Ω. An input impedance of 600 Ω may be needed for certain telecommunications applications.
- **Input Atten** key. The *Input Atten* feature can be activated only when *Port* is set to *RF*. The *Input Atten* feature allows you to enter the attenuation value. The input attenuation can be set at values from 0 to 40 dB in increments of 1 dB. The input attenuation setting is coupled to the maximum total power setting.

NOTE The *Max Total Pwr* and *Input Atten* settings are coupled together. When you switch to a different measurement, the *Max Total Pwr* is kept constant, but the *Input Atten* may change if the two measurements have different mixer margins. Thus, you can directly set the transmitter tester input attenuation, or you can set it indirectly by specifying the maximum expected power at the UUT (*Max Total Pwr* setting).

Adjust the IF Align Signal.

NOTE The IF align signal adjustments are advanced features. IF align rate, amplitude and type should not be modified unless you are familiar with IF align functionality.

- *Signal Rate*. The signal is modulated by a digital sequence that can be set to 1 of 13 positions (rate 0 through 12) to cause the comb spacing (or pulse timing) of the alignment signal to widen or narrow. At the position of 1 the signal rate is set at its maximum value of 234.375 kHz. This frequency rate value will appear in the softkey label. Each time the position integer is incremented, the signal rate is halved. For example, at a position of 2 the signal rate is 117.188 kHz.
- **Signal Amptd** key. To modify the signal amplitude you will enter a DAC value between 0 - 4095. The amplitude range is 0 to 50 dB. Incrementing the DAC value increases the amplitude of the signal in a linear fashion, and will be visible on screen. The default DAC value is 500.
- **Signal Type** key. This menu allows you to select a CW (a tone that appears in the center of the IF), comb, or pulse type signal as the IF align signal.

ManualsPlus.com

Trigger Keys

The Trigger key accesses the mode setup menu for the following trigger sources. See See “Trigger Source” on page 92. for a description of trigger sources including:

- **RF Burst (Wideband)**
- **Video (IF Envlp)**
- *Ext Front*
- *Ext Rear*

Pressing one of the trigger source keys will access the mode setup menu. This menu is used to set the *Delay*, *Level*, and *Slope* for each trigger source. Note that the actual trigger source is selected separately for each measurement (under the *Meas Setup* key).

- **Delay** key. This key is used to set the delay time for trigger sources. For trigger delay use positive values. For pre-trigger delay use negative values. The range of the trigger delay is –500 ms to +500 ms.
- **Level** key. For the *RF Burst (Wideband)* selection the level is relative to the peak level of the RF signal (for the *RF Burst* trigger you will enter a peak level value with a key labelled **Peak Level**, rather than *Level*). For the *Video* selection the level is the value, in dBm at the RF input, that will cause the trigger. For the *Ext Front* and *Ext Rear* selections, the level range is –5 to +5 volts.
- **Slope** key. This key allows you to trigger off of the positive-going edge (**Pos**) or the negative-going edge (*Neg*) of the trigger source signal.

Other keys accessed under the *Trigger* key:

- **Trig Holdoff** key. Sets the period of time before the next trigger can occur.
- **Auto Trig** key. Acts as a trigger timeout. If no trigger occurs by the specified time, a trigger is automatically generated. When set to On the instrument will take data when it receives a signal from the current trigger source; if no signal is received in the expected time period, the time period will default to the Free Run trigger default time period. When set to Off (the default setting) data will only be taken if a trigger has been set, and the Free Run trigger will not be automatically activated.

ManualsPlus.com

- **Frame Timer** key. The frame timer feature uses the internal frame clock to generate a trigger signal.
  - — **Period** key. Sets the period of the frame clock. Values between 33 ns and 559 ms can be entered.
  - — **Offset** key. Allows entry of offset values between 33 ns and 10 s.
  - — **Reset Offset Display** key. Resets the display of the *Offset* key to 0 s.
  - — *Sync Source* menu key. See keys listed below.
- **Sync Source** key menu.
  - — **Off** key. Deactivates any sync source trigger that has been selected and returns you to the frame timer menu.
  - — **Ext Front** key. Synchronizes the measurement to an external sync source, such as a frame clock signal.
  - — **Ext Rear** key. Synchronizes the measurement to an external sync source, such as a frame clock signal.

Selecting the Frequency/Channel

Use the *FREQUENCY/Channel* front panel key to set the center frequency or select the channel for the measurement you want to make.

ManualsPlus.com

4 Making Measurements

This chapter describes measurements that are available in the Basic and Service modes. Basic mode measurements are common to many modulation formats. Service mode measurements are used to check the functionality of the instrument.

ManualsPlus.com

Basic Measurements

Basic measurements are useful for making measurements that are not specified in measurement standards, and will be useful if you need to troubleshoot a measurement operation. In addition, having spectrum and waveform measurements available independently of personality modes provides extra flexibility.

To access the Basic mode press the *Mode* key and select the *Basic* softkey. The following measurements are then available by pressing the *Measure* key:

"Making the Spectrum (Frequency Domain) Measurement" on page 97.

"Making the Waveform (Time Domain) Measurement" on page 110.

"Making the Adjacent Channel Power (ACP) Measurement" on page 122.

"Making the Channel Power Measurement" on page 131.

"Making the Power Stat CCDF Measurement" on page 136.

When you press the key to select the measurement it will become the active measurement, using settings and a display unique to that measurement. Data acquisitions will automatically begin provided trigger requirements, if any, are met.

ManualsPlus.com

Preparing for Measurements

If you want to set the Basic mode to a known, factory default state, press *Preset*. This will preset the mode setup and all of the measurements to the factory default parameters.

NOTE Pressing the *Preset* key does not switch instrument modes.

To preset only the settings that are specific to a specific measurement, select the measurement and press *Meas Setup*, *More*, *Restore Meas Defaults*. This will set the measure setup parameters to the factory defaults for the currently selected measurement only.

Initial Setup

Before making a measurement, make sure the mode setup and frequency/channel parameters are set to the desired settings. Refer to the sections "Mode Setup" and "Selecting the Frequency/Channel" in the previous chapter.

How to Make a Measurement

The following table summarizes the steps you will follow in making a measurement:

Step	Primary Key	Setup Keys	Related Keys
1. Select & setup a mode	*Mode*	*Mode Setup*, *Input*, *Frequency Channel*	*System*
2. Select & setup a measurement	*Measure*	*Meas Setup*	*Meas Control*, *Restart*
3. Select & setup view	*View/Trace*	*Span X Scale*, *Amplitude Y Scale*, *Display*, *Next Window*, *Zoom*	*File*, *Save*, *Print*, *Print Setup*, *Marker*, *Search*

Using Measure Keys

The *MEASURE* front panel key allows you to activate one measurement from those available in the current mode. The measurements that are available will vary depending on which mode you have selected. It may be a measurement personality mode, the basic mode, or the service mode.

ManualsPlus.com

Measurement Control

Following your selection of the instrument mode and mode setup you will use keys in the *Meas Control* keys to control processes that affect the running of the current measurement.

- *Measure* - Toggles between Single and Cont (for continuous) measurement states. When set to Single the measurement will continue until it has reached the specified number of averages set by the average counter. When set to Cont the measurement will run continuously, and perform averaging according to the current average type (repeat or exponential). The default is continuous. See page 90 for an explanation of averaging.
- *Pause* - Pauses the current measurement. Once toggled, the label of the *Pause* key changes to read *Resume*. Measurement settings can be change while it is paused. The **Resume** key continues the active measurement from the point at which it was paused.
- *Restart* re-initiates the current measurement from the beginning (including averaging), without changing the current measurement settings. If the measurement is paused, then restart is the same as resuming from the beginning of the measurement instead of from the point at which it was paused.

Measurement Setup

The *Meas Setup* key accesses features that enable you to adjust parameters of the current measurement, such as resolution bandwidth. You will also use the *Meas Setup* menu to access *Average*, *Trig Source*, and **Advanced** measure setup feature menus.

The following features can be used with many measurements:

- **Res BW** - Changes the resolution bandwidth of a given measurement. Selection of a narrower bandwidth will result in a longer data acquisition time.
- **Restore Meas Defaults** - Presets only the settings that are specific to the selected measurement. This will set the measure setup parameters to the factory defaults, only for the currently selected measurement.

Averaging

Features in the **Average** menu allow you to modify the number, average mode, and type of averaging you use for the currently selected measurement. The features available for averaging will vary slightly depending on the measurement that is currently active. On the display averaged trace results are shown in blue, while the instantaneous signal is shown in yellow.

ManualsPlus.com

- **Avg Number** - Modifies the number of times the current measurement will be repeated with the results from the repeated measurements averaged. Increased averages usually give more accurate results. There will be an increase in the time taken to make a measurement if the number of averages is increased.
- **Avg Mode** - Selects between an *Exp* (exponential) or a *Repeat* mode of averaging. This selection only affects the averaging after the number of N averages is reached (set using *Avg Number*). Normal (linear) averaging is always used until the specified number of N averages is reached. When *Measure* is set to Single, data acquisitions are stopped when the number of averages is reached. Therefore *Avg Mode* has no effect on single measurements.

  Exponential averaging: When *Measure* is set at Cont (continuous) data acquisitions will continue indefinitely. After N averages, exponential averaging is used with a weighting factor of N (the displayed average count stops at N). Exponential averaging weights new data more than old data, which facilitates tracking of slow-changing signals. The value of N is set through use of the *Average* key or the **Avg Bursts** key.

  Repeat averaging: When *Measure* is set at Cont, data acquisitions will continue indefinitely. After N averages is reached, all previous result data is cleared and the average count is set back to 1. This is equivalent to pressing *Measure*, *Single* and then pressing the *Restart* key each time the single measurement finishes.
- **Avg Type** - Allows you to select type of averaging. Only the types of averaging that are appropriate for the current measurement are available in that measurement. The following average types are available:

  Pwr Avg - Averages the power, which is equivalent to the rms of the voltage. This is the default type of averaging.

  Log-Pwr Avg - The log of the power is averaged. This is also known as video averaging.

  Voltage Avg - The voltage is averaged.

  Maximum - The maximum values are retained.

  Minimum - The minimum values are retained.

ManualsPlus.com

Trigger Source

Changing the *Trig Source* alters the trigger source for the current measurement only. Not all of the selections are available for all measurements. Note that the *RF Burst*, *Video*, *Ext Front*, and *Ext Rear* menu keys found in the *Trigger* menu enable you to change settings to modify the delay, level, and slope for each of these trigger sources (as described on page 85. Choose one of the following trigger sources:

- **Free Run** - Triggers at the time the data is requested, completely asynchronous to the RF or IF signals.
- *Video* - Is an internal IF envelope trigger. It triggers on an absolute threshold level of the signal passed by the IF.
- *RF Burst* - Is an internal wideband RF burst trigger that has an automatic level control for burst signals.
- *Ext Front* - Activates the front panel *Ext Trigger Input*. The external trigger must be a signal between –5 and +5 volts.
- *Ext Rear* - Activates the rear panel *Trigger In*. The external trigger must be a signal between –5 and +5 volts.
- **Frame** - Uses the internal frame clock to generate a trigger signal. The clock parameters are controlled under the *Mode Setup* key or the measurement firmware, not both. See the specific measurement for details.
- **Line** - Activates an internal line trigger. Sweep triggers occur at intervals synchronized to the line frequency.

Rear panel *TRIGGER 1 OUT* and *TRIGGER 2 OUT* connectors are coupled to the selected trigger source. These trigger outputs are always on the rising edge with a pulse width of at least 1 µs.

ManualsPlus.com

Changing the View

The following keys enable you to select the desired view of the measurement and to change scale parameters for the graphic window.

View/Trace - Selects a predefined view of the current measurement and highlights the selected window. Once a window is selected, the X and Y scale keys can be used to modify scale parameters. The types of windows, and X and Y scale parameters that are available will vary, depending on the measurement you have activated.

- **Typical Measurement Windows**

  Spectrum window - Select this window if you want to view a signal in parameters of frequency and power. Changes to frequency span or power will sometimes affect data acquisition. For more details see the section on spectrum measurements.

  Signal Envelope window - Select this window to view a signal in parameters of time and power. For more detail see the section on waveform measurements. Both RF and BbIQ signals can be viewed in this window.

  I/Q Waveform window - Select this window to view the I and Q signal characteristics of the current measurement in parameters of voltage and time. This window is in both the spectrum and waveform measurements.

  Press *View/Trace*, *Spectrum*, to view a spectrum measurement window, or *View/Trace*, *Waveform* to view a waveform measurement window.

- **Trace Display**

  All - Displays both the current and the average trace.

  Average - Displays only the average trace. The average trace is shown in blue.

  Current - Displays only the trace for the latest data acquisition. The current trace is shown in yellow.

- **Span / X Scale Keys**

  Span key. This key allows you to modify the frequency span. Changes in span may affect data acquisition.

  Scale/Div key. This key allows you to modify the X scale parameter in units of time.

  Sweep Time key. This key allows you to modify sweep time. Changes in sweep time will affect data acquisition.

  Ref Value key. This key allows you to set the value of the reference level for X scale display in units of time.

  Ref Position key. This key allows you to place the current

ManualsPlus.com

reference level on the left, the center, or the right of the display. This is used for X scale display either in units of frequency or time.

Scale/Coupling key. This key couples the scale/division to the sweep time for measurements made in the time domain.

- **Amplitude / Y Scale Keys**

  Scale/Div key. This key enables you to set the dB/Division (for the Spectrum and the RF Envelope windows) or V/Division (for the I/Q window).

  Ref Value key. This key allows you to set the value of the reference, in units of dB (for the RF Envelope window), or in units of mV (for the I/Q window).

  Ref Position key. This key allows you to move the current reference level to the top, center, or bottom of the display.

ManualsPlus.com

Using Markers

Markers enable you to make measurements on screen. Keys in the *Marker* menu control the number and types of markers you can access. *Trace* keys allow you to select the trace on which you will activate a marker. The *Search* key enables you to perform an immediate peak search and activate a marker at the peak signal.

Paths to access any of the features listed below will be found next to the specific key listed in the key access table which begins on page 53.

Trace

The **Trace** keys allow you to select the trace that will be used for the other marker keys. You can then use marker features to obtain the results you desire. To access *Trace* keys press *Marker*, *Trace*.

NOTE The selections in the *Trace* menu include traces on all windows for the current measurement, including windows that are not currently displayed.

When making waveform measurements you can activate the following trace keys: *RF Envelope* and *I/Q Waveform* keys.

When making spectrum measurements you can activate: *Spectrum*, *Spectrum Avg*, and *I/Q Waveform* keys. The spectrum average trace feature places a marker on the average trace in the spectrum window.

Markers

Up to four markers can appear on the display simultaneously but only one marker can be activated and moved at a time. This marker is called the “active” marker. Press *Marker* to access the keys below, except for the *Shape* and *Marker All Off* keys, which require you to press *Marker*, *More (1 of 2)*.

- **Normal** - Activates a single marker on the selected trace (as set by the trace key) in units either of frequency or time, depending on the measurement mode that is currently active. However, if a marker has previously been activated, that marker will persist as the default marker until it is changed. You can change the position of the marker through use of the front panel step keys and RPG knob. Annotation in the active function area and the upper right hand corner of the display indicate the value of the active marker in units of the window which contains that marker. Pressing *Normal* also deactivates any marker delta functions which have been activated previously.

ManualsPlus.com

- **Select** - Enables you to select one, or more, of the four available markers. Once selected, a marker can be activated, or deactivated, by using the *Normal*, *Delta*, or *Function* keys. If a marker has previously been turned on and assigned to a specific trace it will become active on that trace when the *Select* key is pressed.
- **Delta** - Places two markers on the selected trace or, if a marker is already active, places a second marker at the position of the active marker. You can activate up to two sets of delta markers. Annotation in the active function area and in the upper-right corner of the display show differences between the two markers in the units of the window which contains that marker.
- *Off* - Turns off the selected marker (as set by the *Select* key).
- **Marker All Off** - Turns off all markers.
- **Shape** - Allows you to select markers in the shapes of diamonds, crosses, squares, and lines. The line markers run vertically, from the bottom to the top of the display, while the diamond, square, and cross shapes simply allow you to distinguish different points on the trace by using different shapes. You may use up to four different shaped markers at a given time, although only one may be active.

Marker Functions

The marker *Function* menu key enables you to use two marker functions: *Band Power* and *Noise*. These functions do not apply to all measurements; if you attempt to press a function key for a function that is not applicable to that measurement a message will appear telling you that the function is not supported under the current measurement. These functions are described below. Press *Marker*, *Function* to access the following keys.

- **Band Power** - Allows you to place two markers to either side of a band so you can measure the power within that band. You can use the RPG knob to move the band markers; the numerical power reading will be visible in the upper right corner of the display. This feature is particularly useful for measuring channel power.
- **Noise** - Normalizes the equivalent amplitude of the measured noise to a 1 Hz bandwidth, which is centered around the displayed marker. This is done by sampling and displaying the average of 32 data points.

Search Marker

The front panel *Search* key performs a peak search when pressed. A marker will automatically be activated at the highest peak.

ManualsPlus.com

Making the Spectrum (Frequency Domain) Measurement

Purpose

The spectrum measurement provides spectrum analysis capability for the instrument. The control of the measurement was designed to be familiar to those who are accustomed to using swept spectrum analyzers.

This measurement is FFT (Fast Fourier Transform) based. The FFT-specific parameters are located in the *Advanced* menu. Also available under basic mode spectrum measurements is an I/Q window, which shows the I and Q signal waveforms in parameters of voltage versus time. The advantage of having an I/Q view available while in the spectrum measurement is that it allows you to view complex components of the same signal without changing settings or measurements.

Measurement Method

The measurement uses digital signal processing to sample the input signal and convert it to the frequency domain. With the instrument tuned to a fixed center frequency, samples are digitized at a high rate, converted to I and Q components with DSP hardware, and then converted to the frequency domain with FFT software.

This measurement is available for both the RF input and baseband I/Q inputs. For details on Baseband I/Q operation see "Using Baseband I/Q Inputs (Option B7C)" on page 151.

Making the Measurement

NOTE The factory default parameters provide a good starting point.You will likely want to change some of the settings. Press *Meas Setup*, *More (1 of 2)*, *Restore Meas Defaults* at any time to return all parameters for the current measurement to their default settings.

Press *Measure*, *Spectrum (Freq Domain)* to immediately make a spectrum measurement.

To change any of the measurement parameters from the factory default values, refer to the "Changing the Measurement Setup" section for this measurement.

ManualsPlus.com

When using the baseband I/Q inputs, set *Input Port* to *I/Q*, *I only*, or *Q only*, configure the *I/Q Setup* parameters, and supply the baseband I/Q signals to the front-panel I/Q inputs. The available trigger sources for this measurement includes *I/Q Level*.

Results

A display with both a `Spectrum` window and an `I/Q Waveform` window will appear when you activate a spectrum measurement. Use the *Next Window* key to select a window, and the *Zoom* key to enlarge a window.

Figure 4-1 Spectrum Measurement - Spectrum and I/Q Waveform View

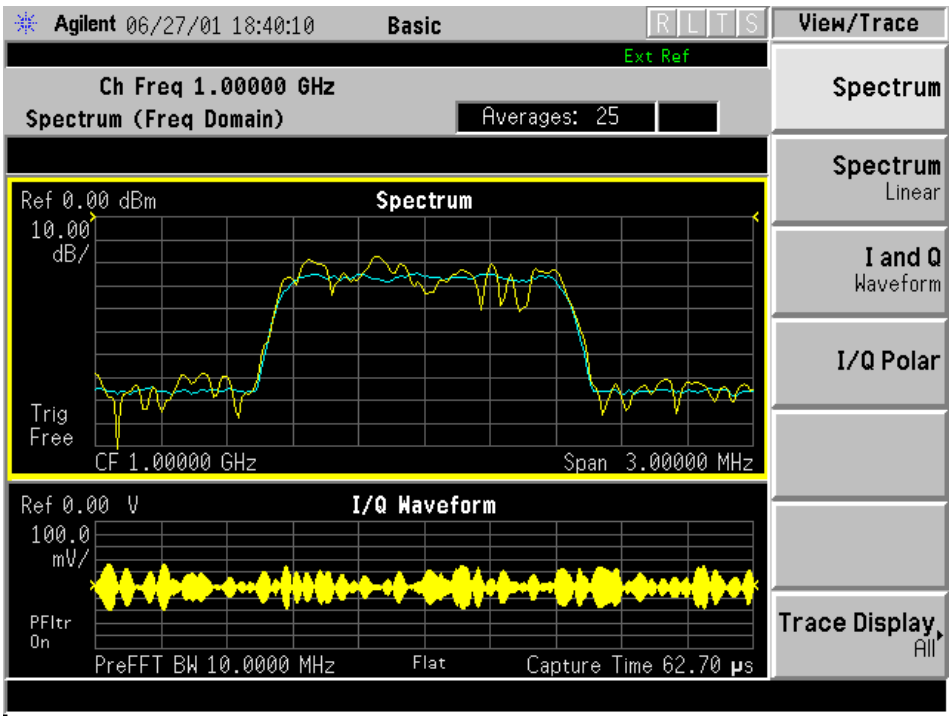

ManualsPlus.com

Changing the Measurement Setup

The following table shows the factory default settings for spectrum (frequency domain) measurements.

Table 4-1 Spectrum (Frequency Domain) Measurement Defaults

Measurement Parameter	Factory Default Condition
View/Trace	Spectrum
Trace Display	All
Res BW	20.0000 kHz; Auto
Averaging:	
Avg Number	25; On
Avg Mode	Exp
Avg Type	Log-Pwr Avg (Video)
Trig Source	Free Run (Immediate)
Spectrum View:	
SPAN	1.00000 MHz
AMPLITUDE Y Scale - Scale/Div	10.00 dB
Spectrum Linear View:	
SPAN	1.00000 MHz
AMPLITUDE Y Scale - Scale/Div	100.0 mV
I and Q Waveform View:	
Capture Time	188.00 µs
AMPLITUDE Y Scale - Scale/Div	100.0 mV
I/Q Polar View:	
I/Q Scale/Div	100.0 mV
I or Q Origin	0.00 V
Advanced	
Pre-ADC BPF	On
Pre-FFT Filter	Flat
Pre-FFT BW	1.55000 MHz; Auto
FFT Window	Flat Top (High AmptdAcc)
FFT Size:	
Length Control	Auto
Min Points/RBW	3.100000
Window Length	706
FFT Length	1024
ADC Range	Auto Peak
Data Packing	Auto
ADC Dither	Auto

ManualsPlus.com

Table 4-1 Spectrum (Frequency Domain) Measurement Defaults

Measurement Parameter	Factory Default Condition
Decimation	0; Auto
IF Flatness	On

NOTE Parameters under the *Advanced* key seldom need to be changed. Any changes from the default advanced values may result in invalid measurement data.

Make sure the *Spectrum (Freq Domain)* measurement is selected under the *Measure* menu. Press the *Meas Setup* key to access a menu which allows you to modify the averaging and trigger source for this measurement (as described in the “Measurement Setup” section). In addition, the following parameters can be modified:

- *Span* - Allows you to modify the frequency span. The range is 10.000 Hz to 10.000 MHz with 1 Hz resolution, depending on the *Res BW* setting. Changing the span causes the resolution bandwidth to change automatically, and will affect data acquisition time.
- *Res BW* - Allows you to set the resolution bandwidth for the FFT, and to toggle its mode between *Auto* and *Man* (manual). If set to *Auto*, the resolution bandwidth is set to *Span*/50 (2% of the span). If set to *Man*, you can enter a value ranging from 100.0 mHz to 3.00000 MHz. A narrower bandwidth will result in a longer data acquisition time.
- *Advanced* - Allows you to access the menu to change the following parameters. The FFT advanced features should be used only if you are familiar with their operation. Changes from the default values may result in invalid data.
  - — *Pre-ADC BPF* - Allows you to toggle the pre-ADC bandpass filter function between *On* and *Off*. The pre-ADC bandpass filter is useful for rejecting nearby signals, so that sensitivity within the span range can be improved by increasing the ADC range gain.
  - — *Pre-FFT Fltr* - Allows you to toggle the pre-FFT filter between *Flat* (flat top) and *Gaussian*. The pre-FFT filter defaults to a flat top filter which has better amplitude accuracy. The Gaussian filter has better pulse response.
  - — *Pre-FFT BW* - Allows you to toggle the pre-FFT bandwidth function between *Auto* and *Man* (manual). The pre-FFT bandwidth filter can be set between 1 Hz and 10 MHz. If set to *Auto*, this pre-FFT bandwidth is nominally 50% wider than the span. This bandwidth determines the ADC sampling rate.
  - — *FFT Window* - Allows you to access the following selection menu. Unless you are familiar with FFT windows, use the flat top filter.

ManualsPlus.com

- ❏ *Flat Top* - Selects this filter for best amplitude accuracy by reducing scalloping error.
- ❏ *Uniform* - Select this filter to have no window active by using the uniform setting.
- ❏ *Hanning* - Press this key to activate the Hanning filter.
- ❏ *Hamming* - Press this key to activate the Hamming filter.
- ❏ *Gaussian* - Press this key to activate the Gaussian filter with the roll-off factor (alpha) of 3.5.
- ❏ *Blackman* - Press this key to activate the Hamming filter.
- ❏ *Blackman Harris* - Press this key to activate the Hamming filter.
- ❏ *K-B 70dB/90dB/110dB (Kaiser-Bessel)* - Select one of the Kaiser-Bessel filters with sidelobes at –70, –90, or –110 dBc.

— *FFT Size* - Allows you to access the menu to change the following parameters:

- ❏ *Length Ctrl* - Allows you to toggle the FFT and window length setting function between *Auto* and *Man* (manual).
- ❏ *Min Pts in RBW* - Allows you to set the minimum number of data points that will be used inside the resolution bandwidth. The range is 0.10 to 100.00 points with 0.01 resolution. This key is grayed out if *Length Ctrl* is set to *Man*.
- ❏ *Window Length* - Allows you to enter the FFT window length in the number of capture samples, ranging from 8 to 1048576. This length represents the actual quantity of I/Q samples that are captured for processing by the FFT (“`Capture Time`” is the associated parameter shown on the screen). This key is grayed out if *Length Control* is set to *Auto*.
- ❏ *FFT Length* - Allows you to enter the FFT length in the number of captured samples, ranging from 8 to 1048576. The FFT length setting is automatically limited so that it is equal to or greater than the FFT window length setting. Any amount greater than the window length is implemented by zero-padding. This key is grayed out if *Length Control* is set to *Auto*.

— *ADC Range* - Allows you to access the menu to define one of the following ADC ranging functions:

- ❏ *Auto* - Select this to set the ADC range automatically. For most FFT spectrum measurements, the auto feature should not be selected. An exception is when measuring a signal which is “bursty”, in which case auto can maximize the time domain dynamic range, if FFT results are less important to you than time domain results.

ManualsPlus.com

- ❏ *Auto Peak* - Select this to set the ADC range automatically to the peak signal level. Auto peak is a compromise that works well for both CW and burst signals.
- ❏ *AutoPeakLock* - Select this to hold the ADC range automatically at the peak signal level. Auto peak lock is more stable than auto peak for CW signals, but should not be used for “bursty” signals.
- ❏ *Manual* - Allows you to access the selection menu: **–6 dB**, *0 dB*, *+6 dB*, *+12 dB*, *+18 dB*, *+24 dB*, to set the ADC range level. Also note that manual ranging is best for CW signals.

— *Data Packing* - Allows you to select *Auto* (the default) or the *Short (16 bit)*, *Medium (24 bit)* and *Long (32 bit)* methods of data packing. The short, medium, and long methods are not compatible with all settings and should not be used unless you are familiar with data packing methods. *Auto* is the preferred choice.

- ❏ *Auto* - The data packing value most appropriate for current instrument settings is selected automatically.
- ❏ *Short (16 bit)* - Select this to pack data every 16 bits.
- ❏ *Medium (24 bit)* - Select this to pack data every 24 bits.
- ❏ *Long (32 bit)* - Select this to pack data every 32 bits.

— *ADC Dither* - Allows you to toggle the ADC dither function between *Auto*, *On*, and *Off*. When set to *Auto* (the default), the ADC dither function will be activated when a narrow bandwidth is being measured, and deactivated when a wide bandwidth is being measured. “ADC dither” refers to the introduction of noise to the digitized steps of the analog-to-digital converter; the result is an improvement in amplitude accuracy. Use of the ADC dither, however, reduces dynamic range by approximately 3 dB.

— *Decimation* - Allows you to toggle the decimation function between *Auto* and *Man*, and to set the decimation value. *Auto* is the preferred setting, and the only setting that guarantees alias-free FFT spectrum measurements. If you are familiar with the decimation feature, you can change the decimation value by setting to *Man*, but be aware that aliasing can result in higher values. Decimation numbers 1 to 4 describe the factor by which the number of points are reduced. The default setting is 1, which results in no data point reduction.

— *IF Flatness* - Allows you to toggle the IF flatness function between *On* and *Off*. If set to *On* (the default), the IF flatness feature causes background amplitude corrections to be performed on the FFT spectrum. The *Off* setting is used for adjustment and troubleshooting of the test instrument.

ManualsPlus.com

Changing the View

The View/Trace key allows you to select the desired view of the measurement from the following. You can use the Next Window key to move between the multiple windows (if any) and make it full size by Zoom.

- *Spectrum* - Provides a combination view of the spectrum graph in parameters of power versus frequency with the semi-log graticules, and the I/Q waveform graph in the parameters of voltage and time. Changes to frequency span or power will sometimes affect data acquisition.
- *Spectrum Linear* - Provides a view of the linear spectrum graph in parameters of voltage and versus frequency with the linear graticules. Changes to frequency span or voltage will sometimes affect data acquisition.

Figure 4-2 Spectrum Measurement - Linear Spectrum View

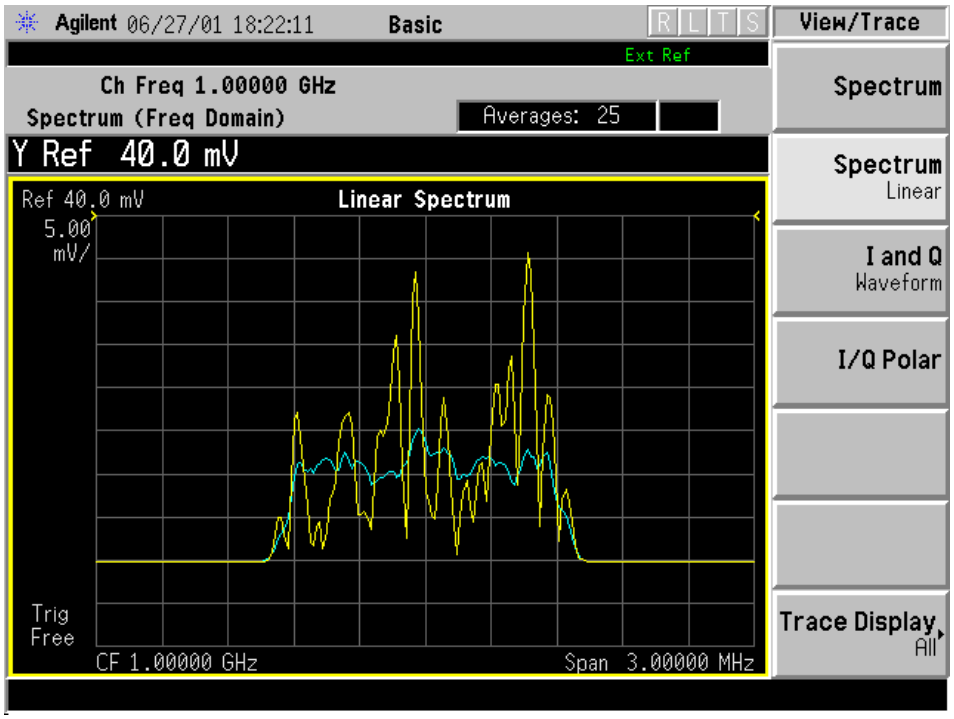

NOTE For the widest spans, the I/Q window becomes just “ADC time domain samples”, because the I/Q down-conversion is no longer in effect. This is not the case if the *Input Port* is set to either *I/Q*, *I only*, or *Q only* and you have connected baseband I/Q signals to the **I/Q INPUT** connectors.

ManualsPlus.com

- *I and Q Waveform* - Provides the individual views of the I and Q signal waveform windows in the parameters of voltage versus time.

Figure 4-3 Spectrum Measurement - I and Q Waveform View

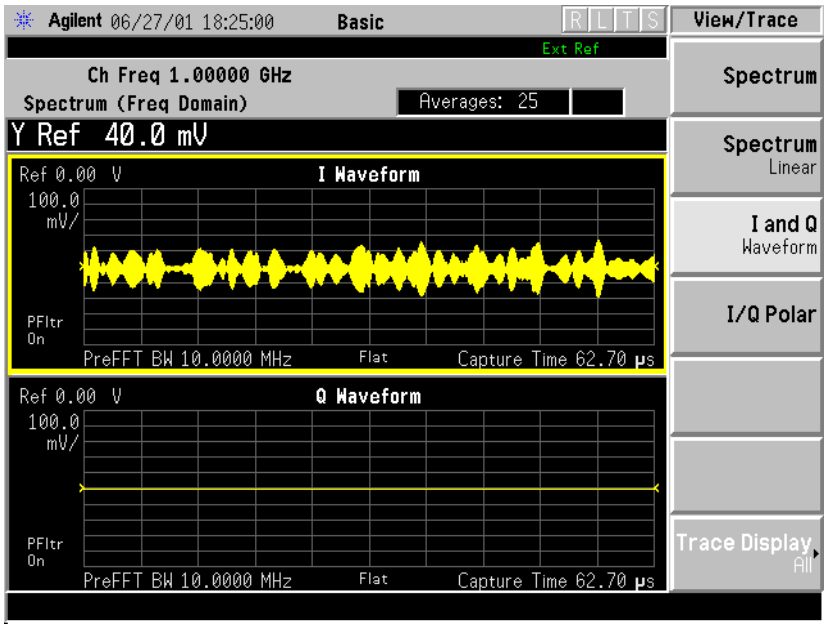

- *I/Q Polar* - Provides a view of the I/Q signal polar vector graph.

Figure 4-4 Spectrum Measurement - I/Q Polar View

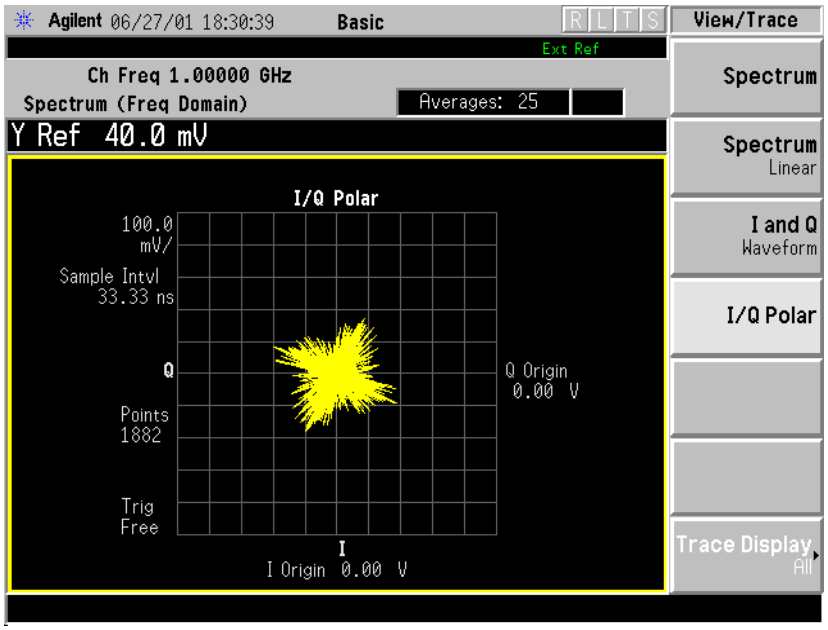

ManualsPlus.com

Changing the Display

The *Span* key under the *Meas Setup* menu controls the horizontal span of the *Spectrum Linear* window. If the *SPAN X Scale* key is pressed, this *Span* key is activated, while the *AMPLITUDE Y Scale* key allows you to access the menus to modify the vertical parameters depending on the selected windows.

Changing the Linear Spectrum Display

If the `Linear Spectrum` window is active in the *Spectrum Linear* view, the *SPAN X Scale* and *AMPLITUDE Y Scale* keys access the menus to modify the following parameters:

- With the *SPAN X Scale* key:
  - — *Span* - Allows you to modify the frequency span. The range is 10.000 Hz to 10.000 MHz with 1 Hz resolution, depending on the *Res BW* setting. Changing the span causes the resolution bandwidth to change automatically, and will affect data acquisition time.
- With the *AMPLITUDE Y Scale* key:
  - — *Scale/Div* - Allows you to set the vertical scale by changing an amplitude value per division. The range is 1.00 nV to 20.00 V per division. The default setting is 100.0 mV. However, since the *Scale Coupling* default is *On*, this value is automatically determined by the measurement results. To manually set this value *Scale Coupling* must be *Off*.
  - — *Ref Value* - Allows you to set the reference value ranging from –250.00 to 250.00 V. The default setting is 0.00 V. However, since the *Scale Coupling* default is *On*, this value is automatically determined by the measurement results. To manually set this value *Scale Coupling* must be *Off*.
  - — *Ref Position* - Allows you to set the reference position to either *Top*, *Ctr* (center) or *Bot* (bottom). The default setting is *Ctr*.
  - — *Scale Coupling* - Allows you to toggle the scale coupling function between *On* and *Off*. The default setting is *On*. Upon pressing the *Restart* front-panel key or *Restart* softkey under the *Meas Control* menu, this function automatically determines the scale per division and reference values based on the measurement results. To manually set either *Scale/Div* or *Ref Value* values, *Scale Coupling* must be *Off*.

ManualsPlus.com

Changing the I or Q Waveform Window

If the `I` or `Q Waveform` window is active in the *I and Q Waveform* view, the *SPAN X Scale* and *AMPLITUDE Y Scale* keys access the menu to modify the following parameters:

- With the *SPAN X Scale* key:
  - — *Scale/Div* - Allows you to set the horizontal scale by changing a time value per division. The range is 1.00 ns to 1.00 s per division. The default setting is 18.8 ms per division. However, since the *Scale Coupling* default is *On*, this value is automatically determined by the measurement results. To manually set this value *Scale Coupling* must be *Off*.
  - — *Ref Value* - Allows you to set the reference value ranging from –1.00 to 10.0 s. The default setting is 0.00 s. However, since the *Scale Coupling* default is *On*, this value is automatically determined by the measurement results. To manually set this value *Scale Coupling* must be *Off*.
  - — *Ref Position* - Allows you to set the reference position to either *Left*, *Ctr* (center) or *Right*. The default setting is *Left*.
  - — *Scale Coupling* - Allows you to toggle the scale coupling function between *On* and *Off*. The default setting is *On*. Upon pressing the *Restart* front-panel key or *Restart* softkey under the *Meas Control* menu, this function automatically determines the scale per division and reference values based on the measurement results.To manually set either *Scale/Div* or *Ref Value* values, *Scale Coupling* must be *Off*.
- With the *AMPLITUDE Y Scale* key:
  - — *Scale/Div* - Allows you to set the vertical scale by changing the amplitude value per division. The range is 1.00 nV to 20.00 V per division. The default setting is 100.0 mV. However, since the *Scale Coupling* default is *On*, this value is automatically determined by the measurement results. To manually set this value *Scale Coupling* must be *Off*.
  - — *Ref Value* - Allows you to set the reference value ranging from –250.00 to 250.00 V. The default setting is 0.00 V. However, since the *Scale Coupling* default is *On*, this value is automatically determined by the measurement results. To manually set this value *Scale Coupling* must be *Off*.
  - — *Ref Position* - Allows you to set the reference position to either *Top*, *Ctr* (center) or *Bot* (bottom). The default setting is *Ctr*.

ManualsPlus.com

— *Scale Coupling* - Allows you to toggle the scale coupling function between *On* and *Off*. The default setting is *On*. The *Restart* front-panel key or *Restart* softkey under the *Meas Control* menu, this function automatically determines the scale per division and reference values by the measurement results.To manually set either *Scale/Div* or *Ref Value* values, *Scale Coupling* must be *Off*.

Changing the I/Q Polar Window

If the `I/Q Polar` window is active in the *I/Q Polar* view, the *SPAN X Scale* key or the *AMPLITUDE Y Scale* key access a menu to modify the following parameters:

- *I/Q Scale/Div* - Allows you to set the vertical and horizontal scales by changing the value per division. The range is 1.00 nV to 20.00 V per division. The default setting is 100.0 mV.
- *I Origin* or *Q Origin* - Allows you to set the reference value ranging from –250.00 to 250.00 V. The default setting is 0.00 V.

Selecting Displayed Traces Within Windows

The *View/Trace* key allows you to access the *Trace Display* key to reveal the trace selection menu. The currently selected trace type is shown on the *Trace Display* key.

- *All* - Allows you to view both the current trace and the average trace.
- *Average* - Allows you to view only the average trace (in blue color).
- *Current* - Allows you to view only the trace (in yellow color) for the latest data acquisition.

ManualsPlus.com

Using the Markers

The *Marker* front-panel key accesses the menu to configure the markers. If you want to use the marker function in the I waveform window, press *View/Trace*, *I and Q Waveform*, *Marker*, *Trace*, *I Waveform*.

- *Select 1 2 3 4* - Allows you to activate up to four markers with the corresponding numbers, respectively. The selected number is underlined and its function is defined by pressing the *Function* key. The default is 1.
- *Normal* - Allows you to activate the selected marker to read the frequency and amplitude of the marker position on the spectrum trace. Marker position is controlled by the *RPG* knob.
- *Delta* - Allows you to read the differences in frequencies and amplitudes between the selected marker and the next.
- *Function Off* - Allows you to define the selected marker function to be *Band Power*, *Noise*, or *Off*. The default is *Off*. If set to *Band Power*, you need to select *Delta*.
- *Trace Spectrum* - Allows you to place the selected marker on the *Spectrum*, *Spectrum Avg*, *Spectrum Linear*, *Spectrum Avg Linear*, *I/Q Waveform*, *I Waveform*, or *Q Waveform* trace. The default is *Spectrum*.
- *Off* - Allows you to turn off the selected marker.
- *Shape Diamond* - Allows you to access the menu to define the selected marker shape to be *Diamond*, *Line*, *Square*, or *Cross*. The default shape is *Diamond*.
- *Marker All Off* - Allows you to turn off all of the markers.

The front panel *Search* key performs a peak search when pressed. A marker will automatically be activated at the highest peak.

Measuring Band Power

A band power measurement using the markers calculates the average power between two adjustable markers. To make a band power measurement:

1. Press the *Marker* key.
2. Press *Trace*, *Spectrum* to activate a marker on the instantaneous spectrum signal.
3. Press the *Spectrum Avg* key to activate a marker on the average spectrum trace.
4. Press *Function, Band Power*.
5. Two marker lines are activated at the extreme left side of the horizontal scale. Press *Normal* and move marker 1 to the desired place by rotating the *RPG* knob.

ManualsPlus.com

6. Press *Delta* to bring marker 2 to the same place as marker 1.

7. Move marker 1 to the other desired position by rotating the *RPG* knob. Band power measures the average power between the two markers.

8. When the band power markers are active, the results are shown in the results window as `Mean Pwr (Between Mks)`. When the band power function is off the results window reads `Mean Pwr (Entire Trace)`.

Troubleshooting Hints

Changes made by the user to advanced spectrum settings, particularly to ADC range settings, can inadvertently result in spectrum measurements that are invalid and cause error messages to appear. Care needs to be taken when using advanced features.

ManualsPlus.com

Making the Waveform (Time Domain) Measurement

Purpose

The waveform measurement is a generic measurement for viewing the input signal waveforms in the time domain. This measurement is how the instrument performs the zero span functionality found in traditional spectrum analyzers. Also available under basic mode waveform measurements is an I/Q window, which shows the I and Q signal waveforms in parameters of voltage versus time. The advantage of having an I/Q view available while in the waveform measurement is that it allows you to view complex components of the same signal without changing settings or measurements.

The waveform measurement can be used to perform general purpose power measurements to a high degree of accuracy.

Measurement Method

The instrument makes repeated power measurements at a set frequency, similar to the way a swept-tuned spectrum analyzer makes zero span measurements. The input analog signal is converted to a digital signal, which then is processed into a representation of a waveform measurement. The measurement relies on a high rates of sampling to create an accurate representation of a time domain signal.

This measurement is available for use with both the RF input and baseband I/Q inputs. For details on Baseband I/Q operation see the section on "Using Baseband I/Q Inputs (Option B7C)" on page 151."

Making the Measurement

NOTE The factory default parameters provide a good starting point.You may want to change some of the settings. Press *Meas Setup*, *More (1 of 2)*, *Restore Meas Defaults* at any time to return all parameters for the current measurement to their default settings.

Press *MEASURE*, *Waveform (Time Domain)* to immediately make a waveform (time domain) measurement.

To change any of the measurement parameters from the factory default values, refer to the "Changing the Measurement Setup" section for this measurement.

ManualsPlus.com

Results

The next figure shows an example of a `Signal Envelope` result for the waveform (time domain) measurements in the graph window. The measured values for the mean power and peak-to-mean power are shown in the text window.

Figure 4-5 Waveform Measurement - Signal Envelope View

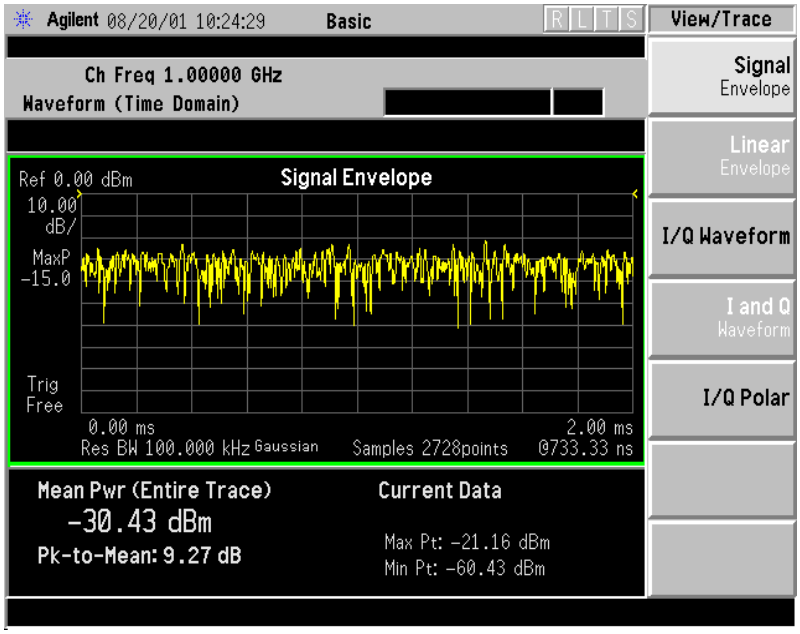

*Meas Setup: View/Trace = Signal Envelope,
Others = Factory default settings

*Input signal: cdma2000 Rev 8, SR1, 9 Channel

ManualsPlus.com

Figure 4-6 Waveform Measurement - I/Q Waveform View

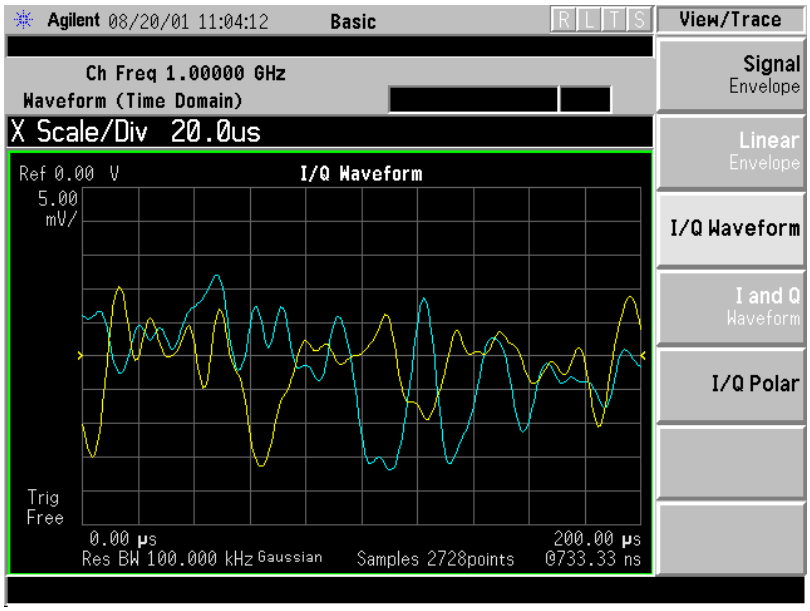

ManualsPlus.com

Changing the Measurement Setup

This table shows the factory default settings for waveform (time domain) measurements.

Table 4-2 Waveform (Time Domain) Measurement Defaults

Measurement Parameter	Factory Default Condition
View/Trace	RF Envelope
Sweep Time	2.000 ms
Res BW	100.000 kHz
Averaging: Avg Number Avg Mode Avg Type	 10; Off Exp Pwr Avg (RMS)
Trig Source	Free Run (Immediate)
Signal Envelope View: SPAN X Scale - Scale/Div AMPLITUDE Y Scale - Scale/Div	 200.0 µs 10.00 dB
I/Q Waveform View: SPAN X Scale -Scale/Div AMPLITUDE Y Scale - Scale/Div	 200.0 µs 100.0 mV
I/Q Polar View: I/Q Scale/Div I or Q Origin	 100.0 mV 0.00 V
Advanced	
Pre-ADC BPF	Off
RBW Filter	Gaussian
ADC Range	Auto
Data Packing	Auto
ADC Dither	Off
Decimation	Off

NOTE Parameters that are under the *Advanced* key seldom need to be changed. Any changes from the default values may result in invalid measurement data.

Make sure the *Waveform (Time Domain)* measurement is selected under the *MEASURE* menu. Press the *Meas Setup* key to access a menu which allows you to modify the averaging, and trigger source for this measurement (as described in the “Measurement Setup” section).

ManualsPlus.com

In addition, the following parameters can be modified:

- *Sweep Time* - Allows you to specify the measurement acquisition time which is used as the length of the time capture record. The range is 1.0 µs and 100.0 s, depending upon the resolution bandwidth setting and the available internal memory size for acquisition points.
- *Res BW* - Allows you to set the measurement bandwidth. The range is 10 Hz to 7.5 MHz. A larger bandwidth results in a larger number of acquisition points and reduces the maximum value allowed for the sweep time.
- *Advanced* - Allows you to access the menu to change the following parameters. Changes from the default values may result in invalid data.
  - — *Pre-ADC BPF* - Allows you to toggle the pre-ADC bandpass filter function between *On* or *Off*. The default setting is *Off*. The pre-ADC bandpass filter is useful for rejecting nearby signals, so that sensitivity within the span range can be improved by increasing the ADC range gain.
  - — *RBW Filter* - Allows you toggle the resolution bandwidth filter selection between *Flat* and *Gaussian*. If set to *Gaussian*, the filter provides more even time-domain response, particularly for “bursts”. If set to *Flat*, the filter provides a flatter bandwidth but is less accurate for “pulse responses”. A flat top filter also requires less memory and allows longer data acquisition times. For most waveform applications, the Gaussian filter is recommended.
  - — *ADC Range* - Allows you to access the menu to select one of the ADC ranging functions:
    - ❑ *Auto* - Select this to cause the instrument to automatically adjust the signal range for optimal measurement results.
    - ❑ *AutoPeak* - Select this to cause the instrument to continuously seek the highest peak signal.
    - ❑ *AutoPeakLock* - Select this to cause the instrument to adjust the range for the highest peak signal it identifies, and retains the range settings determined by that peak signal, even when the peak signal is no longer present.
    - ❑ *Manual* - Allows you to access the selection menu: **–6 dB**, *0 dB*, *+6 dB*, *+12 dB*, *+18 dB*, *+24 dB*, to set the ADC range level. Also note that manual ranging is best for CW signals.
  - — *Data Packing* - Allows you to select *Auto* (the default) or the *Short (16 bit)*, *Medium (24 bit)* and *Long (32 bit)* methods of data packing. The short, medium, and long methods are not compatible with all settings and should not be used unless you are familiar with data packing methods. *Auto* is the preferred choice.

ManualsPlus.com

- ❏ *Auto* - The data packing value most appropriate for current instrument settings is selected automatically.
- ❏ *Short (16 bit)* - Select this to pack data every 16 bits.
- ❏ *Medium (24 bit)* - Select this to pack data every 24 bits.
- ❏ *Long (32 bit)* - Select this to pack data every 32 bits.

— *ADC Dither* - Allows you to toggle the ADC dither function between *On* and *Off*. The default setting is *Off*. If set to *On*, the ADC dither refers to the introduction of noise to the digitized steps of the analog-to-digital converter, and results in better amplitude linearity and resolution in low level signals. However, it also results in reduced dynamic range by approximately 3 dB.

— *Decimation* - Allows you to toggle the decimation function between *On* and *Off*, and to set the decimation value. Decimation allows longer acquisition times for a given bandwidth by eliminating data points. Long time captures can be limited by the instrument data acquisition memory. Decimation numbers 1 to 4 describe the factor by which the number of points are reduced. The default setting is 1, which results in no data point reduction.

ManualsPlus.com

Changing the View

The *View/Trace* key allows you to access the selection menu for the desired measurement view. You can use the *Next Window* key to move between the multiple windows (if any) and make it full size by *Zoom*.

- *Signal Envelope* - Provides a combination view of the waveform graph in parameters of power versus time with the semi-log graticules, and the measurement results for `Mean Pwr (Entire Trace)`, `Pk-to-Mean`, `Current Data` for `Max Pt` and `Min Pt` are shown in the text window. Changes to sweep time or resolution bandwidth will sometimes affect data acquisition.

Figure 4-7 Waveform Measurement - Signal Envelope View

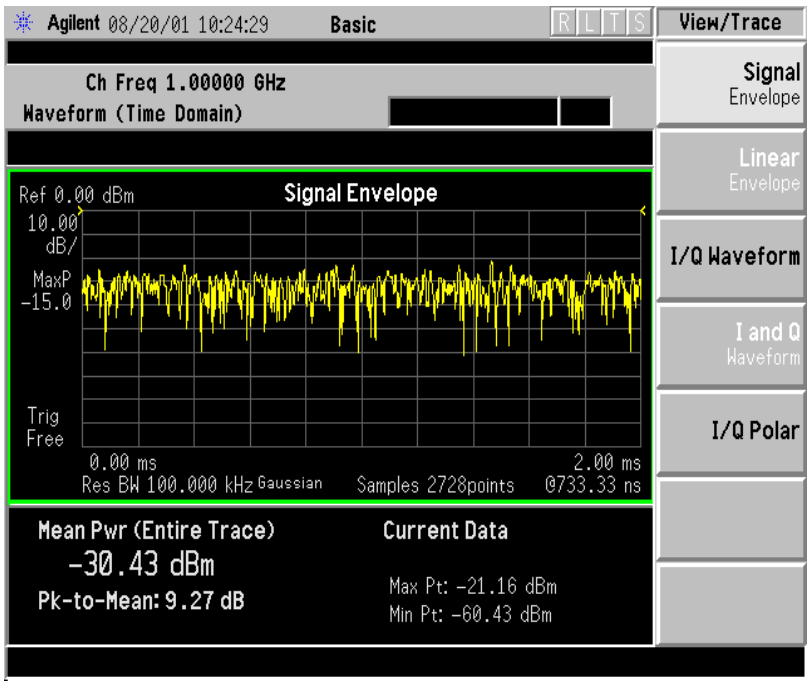

*Meas Setup: View/Trace = Signal Envelope,
Others = Factory default settings

*Input signal in this example: cdma2000 Rev 8, SR1, 9 Channel

ManualsPlus.com

- *I/Q Waveform* - Provides a view of the I/Q waveform graph in parameters of voltage versus time in the linear graticules. Changes to sweep time or resolution bandwidth will sometimes affect data acquisition.

Figure 4-8 Waveform Measurement - I/Q Waveform View

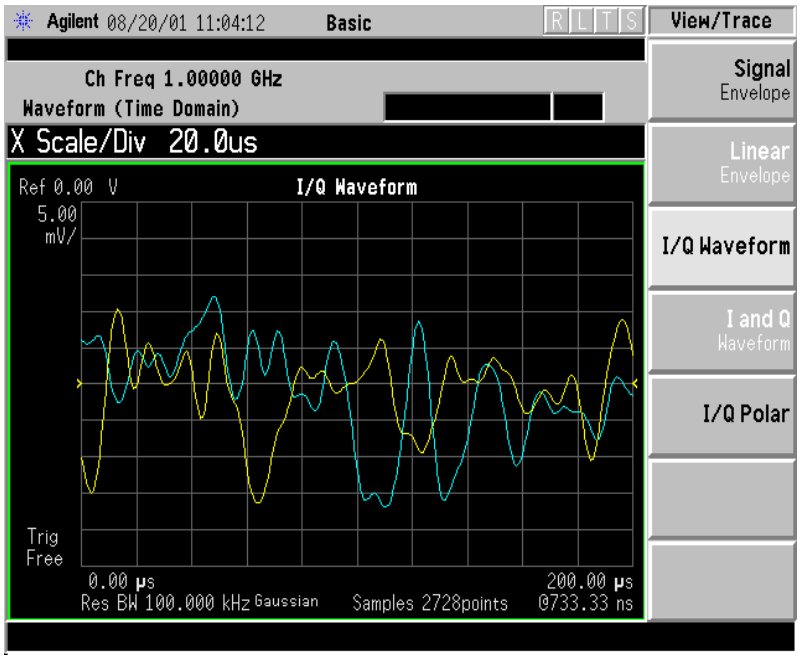

*Meas Setup: View/Trace = I/Q Waveform View
Others = Factory default settings

*Input signal in this example: cdma2000 Rev 8, SR1, 9 Channel

NOTE For the widest spans the I/Q Waveform window becomes just “ADC time domain samples”, because the I/Q down-conversion is no longer in effect.

ManualsPlus.com

- *I/Q Polar* - Provides a view of the I/Q signal polar vector graph.

Figure 4-9 Waveform Measurement - I/Q Polar View

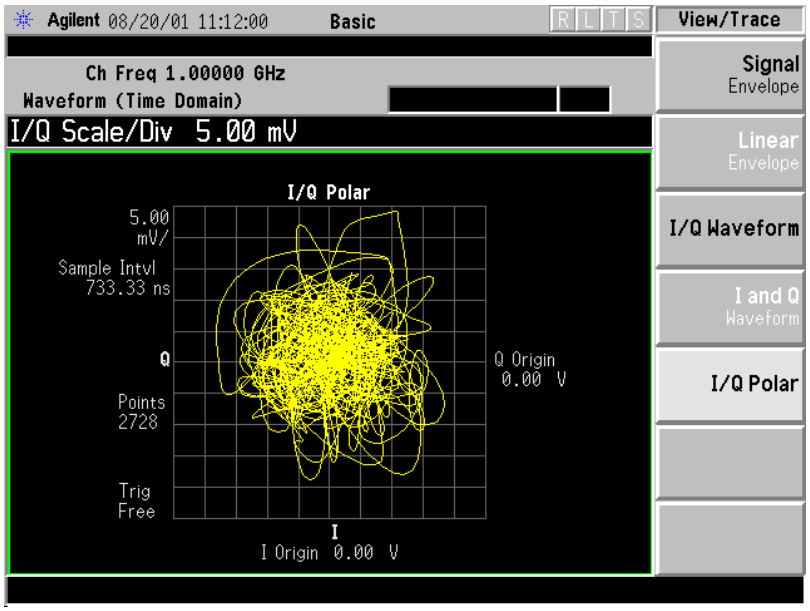

*Meas Setup: View/Trace = I/Q Polar View,
Others = Factory default settings

*Input signal in this example: cdma2000 Rev 8, SR1, 9 Channel

Changing the Display

The *Sweep Time* key under the *Meas Setup* menu controls the horizontal time span for this measurement, while the *SPAN X Scale* key allows you to access the menu to modify the horizontal parameters common to the rectangular windows for this measurement:

- *Scale/Div* - Allows you to set the horizontal scale by changing a time value per division. The range is 1.0 ns to 1.000 s per division with 0.01 ns resolution. The default setting is 200.0 µs per division. However, since *Scale Coupling* is defaulted to *On*, this value is automatically determined by the measurement result.
- *Ref Value* - Allows you to set the reference value ranging from –1.0 to 10.0 s. The default setting is 0.00 s. However, since *Scale Coupling* is defaulted to *On*, this value is automatically determined by the measurement results.
- *Ref Position* - Allows you to set the reference position to either *Left*, *Ctr* (center) or *Right*. The default setting is *Left*.

ManualsPlus.com

- *Scale Coupling* - Allows you to toggle the scale coupling function between *On* and *Off*. The default setting is *On*. Upon pressing the *Restart* front-panel key or *Restart* softkey under the *Meas Control* menu, this function automatically determines the scale per division and reference values based on the measurement results.

If the `Signal Envelope` window is active in the *Signal Envelope* view, the *AMPLITUDE Y Scale* key accesses the menu to modify the following parameters:

- *Scale/Div* - Allows you to set the vertical scale by changing an amplitude value per division. The range is 0.10 to 20.00 dB per division with 0.01 dB resolution. The default setting is 10.00 dB per division. However, since *Scale Coupling* is defaulted to *On*, this value is automatically determined by the measurement result.
- *Ref Value* - Allows you to set the reference value ranging from –250.00 to 250.00 dBm. The default setting is 0.00 dBm. However, since *Scale Coupling* is defaulted to *On*, this value is automatically determined by the measurement results.
- *Ref Position* - Allows you to set the reference position to either *Top*, *Ctr* (center) or *Bot* (bottom). The default setting is *Top*.
- *Scale Coupling* - Allows you to toggle the scale coupling function between *On* and *Off*. The default setting is *On*. Upon pressing the *Restart* front-panel key or *Restart* softkey under the *Meas Control* menu, this function automatically determines the scale per division and reference values based on the measurement results.

If the `I/Q Waveform` window is active in the *I/Q Waveform* view, the *AMPLITUDE Y Scale* key accesses the menu to modify the following parameters:

- *Scale/Div* - Allows you to set the vertical scale by changing an amplitude value per division. The range is 1.00 nV to 20.00 V per division. The default setting is 100.0 mV. However, since *Scale Coupling* is defaulted to *On*, this value is automatically determined by the measurement result.
- *Ref Value* - Allows you to set the reference value ranging from –250.00 to 250.00 V. The default setting is 0.00 V. However, since *Scale Coupling* is defaulted to *On*, this value is automatically determined by the measurement results.
- *Ref Position* - Allows you to set the reference position to either *Top*, *Ctr* (center) or *Bot* (bottom). The default setting is *Ctr*.
- *Scale Coupling* - Allows you to toggle the scale coupling function between *On* and *Off*. The default setting is *On*. Upon pressing the *Restart* front-panel key or *Restart* softkey under the *Meas Control* menu, this function automatically determines the scale per division and reference values based on the measurement results.

ManualsPlus.com

If the `I/Q Polar` window is active in the *I/Q Polar* view, the *SPAN X Scale* or *AMPLITUDE Y Scale* key accesses the menu to modify the following parameters:

- *I/Q Scale/Div* - Allows you to set the vertical and horizontal scales by changing a value per division. The range is 1.00 nV to 20.00 V per division. The default setting is 100.0 mV.
- *I* or *Q Origin* - Allows you to set the reference value ranging from –250.00 to 250.00 V. The default setting is 0.00 V.

The *Display* key is not available for this measurement.

Using the Markers

The *Marker* front-panel key accesses the menu to configure the markers.

- *Select 1 2 3 4* - Allows you to activate up to four markers with the corresponding numbers, respectively. The selected number is underlined and its function is defined by pressing the *Function* key. The default is 1.
- *Normal* - Allows you to activate the selected marker to read the time position and amplitude of the marker on the RF envelope trace. Marker position is controlled by the *RPG* knob.
- *Delta* - Allows you to read the differences in time positions and amplitudes between the selected marker and the next.
- *Function Off* - Allows you to define the selected marker function to be *Band Power*, *Noise*, or *Off*. The default is *Off*. If set to *Band Power*, you need to select *Delta*.
- *Trace Signal Envelope* - Allows you to place the selected marker on *Signal Envelope*, *I/Q Waveform*.
- *Off* - Allows you to turn off the selected marker.
- *Shape Diamond* - Allows you to access the menu to define the selected marker shape to be *Diamond*, *Line*, *Square*, or *Cross*. The default shape is *Diamond*.
- *Marker All Off* - Allows you to turn off all of the markers.

The front panel *Search* key performs a peak search when pressed. A marker will automatically be activated at the highest peak.

ManualsPlus.com

NOTE In the Waveform measurement, the `Mean Pwr (Entire Trace)` value plus the `Pk-to-Mean` value will sum to equal the current `Max Pt.` value as shown in the data window below the RF Envelope display. If you do a marker peak search (*Search*) with averaging turned off, the marker will find the same maximum point. However, if you turn averaging on, the `Pk-to-Mean` value will use the highest peak found for any acquisition during averaging, while the marker peak will look for the peak of the display, which is the result of n-averages. This will usually result in differing values for the maximum point.

Troubleshooting Hints

Changes made to advanced waveform settings can inadvertently result in measurements that are invalid and cause error messages to appear. Care needs to be taken when using advanced features, as some settings may incorrectly appear to provide a valid result. Press *Meas Setup*, *More*, *Restore Meas Defaults* to return measurement settings to a known state, then vary settings only as necessary.

ManualsPlus.com

Making the Adjacent Channel Power (ACP) Measurement

Purpose

Adjacent Channel Power(ACP) is the power contained in a specified frequency channel bandwidth relative to the total carrier power. It may also be expressed as a ratio of power spectral densities between the carrier and the specified offset frequency band.

As a composite measurement of out-of-channel emissions, ACP combines both in-band and out-of-band specifications to provide useful figures-of-merit for spectral regrowth and emissions produced by components and circuit blocks without the rigor of performing a full spectrum emissions mask measurement.

To maintain a quality call by avoiding channel interference, it is important to measure and reduce any adjacent channel leakage power transmitted from a mobile phone. The characteristics of adjacent channel leakage power are mainly determined by the transmitter design, particularly the low-pass filter.

Measurement Method

This ACP measurement analyzes the total power levels within the defined carrier bandwidth and at given frequency offsets on both sides of the carrier frequency.This measurement requires the user to specify measurement bandwidths of the carrier channel and each of the offset frequency pairs up to 5. Each pair may be defined with unique measurement bandwidths.

It uses an integration bandwidth (IBW) method that performs a time domain data acquisition and applies FFT to get a frequency domain trace. In this process, the channel integration bandwidth is analyzed using the automatically defined resolution bandwidth (RBW), which is much narrower than the channel bandwidth. The measurement computes an average power of the channel over a specified number of data acquisitions, automatically compensating for resolution bandwidth and noise bandwidth.

If *Total Pwr Ref* is selected as the measurement type, the results are displayed as relative power in dBc and as absolute power in dBm. If *PSD Ref* (Power Spectral Density Reference) is selected, the results are displayed as relative power in dB, and as absolute power in dBm/Hz.

ManualsPlus.com

Recommended Offset Frequencies and Reference Bandwidths

While the user sets the specific offsets and reference bandwidths, the radio specifications recommend some common setups as shown in the following table.

Table 4-3 ACP Setup Recommendation

Band	Test Unit	Offset Frequency	Reference (Integration) Bandwidth	Result Reference
IS-95-A	Mobile	±900 kHz	30 kHz	Total Power in 1.23 MHz
		±1.98 MHz	30 kHz	
	Base	±750 kHz	30 kHz	PSD Ref
		±1.98 MHz	30 kHz	
J-STD-008	Mobile/Base	±885 kHz	30 kHz	Total Power in 1.23 MHz
		±1.25625 MHz	12.5 kHz	
		±2.75 MHz	1 MHz	

Making the Measurement

The factory default settings provide a good starting point. For special requirements, you many want to change some of the settings. Press *Meas Setup*, *More*, *Restore Meas Defaults* at any time to return all parameters for the current measurement to their default settings.

Select the desired center frequency as described in the “Changing the Frequency Channel” section.

Press *MEASURE*, *ACP* to immediately make an adjacent channel power ratio measurement.

To change any of the measurement parameters from the factory default values, refer to the “Changing the Measurement Setup” section of this measurement.

Results

The following figure shows an example result of `ACP (Total Pwr Ref)` measurements in the bar graph window. The absolute and relative power levels on both sides of the carrier frequency are displayed in the graphic window and text window.

ManualsPlus.com

Figure 4-10 ACP Measurement - Bar Graph View

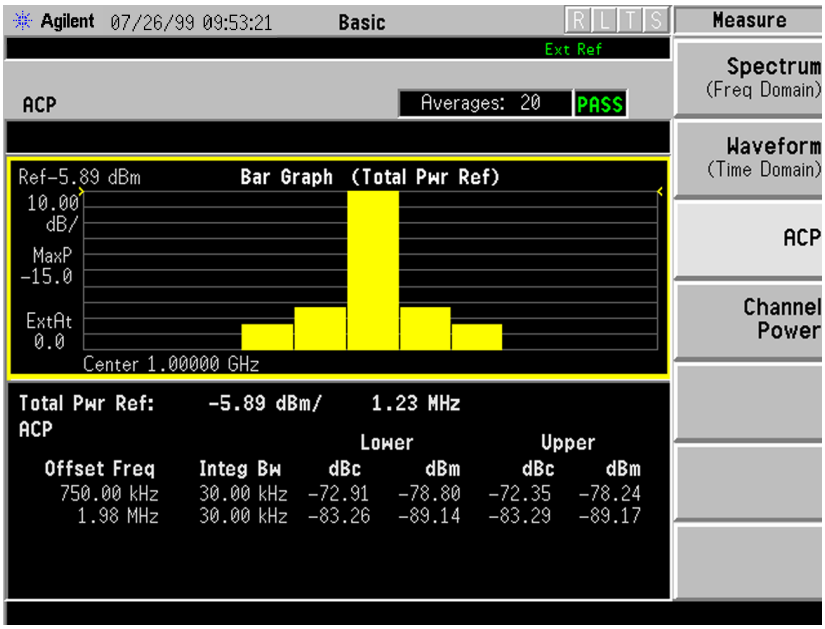

Changing the Measurement Setup

The next table shows the factory default settings for adjacent channel power ratio measurements.

Table 4-4 Adjacent Channel Power Measurement Defaults

Measurement Parameter	Factory Default Condition
View/Trace	Bar Graph (Total Pwr Ref)
Spectrum Trace	On
Averaging; Averaging Number	On; 10
Avg Mode	Repeat
Ref Channel:	
Chan Integ BW	1.23000 MHz
Avg Type	Pwr Avg (RMS)
Offset/Limits:	
Offset	A
Offset Freq	750.000 kHz; On (offset A)
Offset Side	Both
Ref BW	30.000 kHz
Avg Type	Pwr Avg (RMS)

ManualsPlus.com

Table 4-4 Adjacent Channel Power Measurement Defaults

Measurement Parameter	Factory Default Condition
Limit Setup:	
Abs Limit	0.00 dBm
Fail	Relative
Rel Lim (Car)	–45.00 dBc (offset A)
Rel Lim (PSD)	–28.87 dB (offset A)
Meas Type	Total Pwr Ref
Trig Source	Free Run (Immediate)
Fast ACP	Off
Limit Test	On
Ref Chan Adv:	
Sweep Time	546.1 µs; Auto
Data Points	2048; Auto
Res BW	1.620 kHz (grayed out)
Num FFT Seg	1; Auto
Offset Adv:	
Sweep Time	11.20 ms; Auto
Data Points	1024; Auto
Res BW	79.0 Hz (grayed out)
Num FFT Seg	1; Auto
Relative Atten	0.00 dB

Make sure the *ACP* measurement is selected under the *MEASURE* menu. The *Meas Setup* key accesses the menu which allows you to modify the average number and average mode for this measurement. In addition, the following parameters for adjacent channel power measurements can be modified:

- *Ref Channel* - Allows you to access the following parameters for the reference channel settings:

  Chan Integ BW - Allows you to specify the channel integration bandwidth in which the carrier power is measured. The range is 1.000 kHz to 20.0000 MHz with the best resolution of 1 Hz.

  Avg Type - Choose the averaging type between *Pwr Avg (RMS)* and *Maximum*.

  Ref Chan Adv - Allows you to access the menu to change the following advanced parameters for the reference channel:

    Sweep Time - Allows you to select *Man* or *Auto* (default) mode.

ManualsPlus.com

Data Points - The automatic mode chooses the optimum number of points for the fastest measurement time with acceptable repeatability. The minimum number of points that could be used is determined by the sweep time and the sampling rate. You can increase the length of the measured time record (capture more of the burst) by increasing the number of points, but the measurement will take longer.

Res BW - This key is always grayed out. However, it allows you to see the resolution bandwidth that is derived from the combination of sweep time, data points, and FFT segments.

Num FFT Seg - Allows you to select the number of FFT segments used in making the measurement of the reference channel (carrier). In automatic mode the measurement optimizes the number of FFT segments required for the shortest measurement time. The minimum number of segments required to make a measurement is set by your desired measurement bandwidth. Selecting more than the minimum number of segments will give you more dynamic range for making the measurement, but the measurement will take longer to execute.

- *Offset/Limits* - Allows you to access the menu to change the following parameters for offset frequency settings and pass/fail tests:

  Offset - Allows you to select one of five offsets (*A* through *E*). Only one selection at a time (A, B, C, D, or E) is shown on this key label. The remaining softkeys on the *Offset/Limits* menu then apply to the selected offset.

  Offset Freq- Allows you to enter an offset frequency value and toggle the offset frequency function between *On* and *Off*. The range is 0.0 Hz to 45.000 MHz. While this key is activated, enter an offset value from the numeric keypad by terminating with one of the frequency unit keys shown. Offsets A and B are defaulted as follows, while others are defaulted to 0.0 Hz:

  Offset A 750.000 kHz
  Offset B 1.98000 MHz

  One offset frequency value corresponding to the *Offset* key selection is shown on this key label.

  Offset Side - Choose *Neg* (negative) or *Pos* (positive) to have single-sided offsets relative to the carrier, or *Both* (the default) to have offset frequency pairs.

  Ref BW - Allows you to enter a reference bandwidth ranging from 300 Hz to 20.0000 MHz with the best resolution of 1 Hz. When this parameter is changed, the integration bandwidth `Integ BW` in the summary data window changes to that value.

ManualsPlus.com

Avg Type - Choose the type of averaging between *Pwr Avg (RMS)* or *Maximum*.

Limit Setup - Allows you to access the menu to setup the limit values and conditions.

Abs Limit - Allows you to enter an absolute limit value ranging from –200.00 to +50.00 dBm with 0.01 dB resolution.

Fail - Allows you to access the following menu to select one of the logic keys for fail conditions between the measurement results and the test limits:

AND - Fail is shown if one of the relative ACP measurement results is larger than *Rel Lim (Car)* or *Rel Lim (PSD)* AND one of the absolute ACP measurement results is larger than *Abs Limit*.

OR - Fail is shown if one of the relative ACP measurement results is larger than *Rel Lim (Car)* or *Rel Lim (PSD)* OR one of the absolute ACP measurement results is larger than *Abs Limit*.

Absolute - Fail is shown if one of the absolute ACP measurement results is larger than *Abs Limit*.

Relative - Fail is shown if one of the relative ACP measurement results is larger than *Rel Lim (Car)* or *Rel (PSD)*.

Rel Lim (Car)- Allows you to enter a relative limit value of the carrier level ranging from –150.00 to +50.00 dBc with 0.01 dB resolution. The default is –45.00 dBc for Offset A and –60.00 dBc for offset B.

Rel Lim (PSD)- Allows you to enter a relative limit value of the power spectral density level ranging from –150.00 to +50.00 dB with 0.01 dB resolution. The default is –28.87 dB for Offset A and –43.87 dB for offset B.

Offset Adv - Allows you to access the menu to change the following advanced offset parameters:

Sweep Time - Allows you to select the sweep time manually (*Auto* is the default).

Data Points - Allows you to select the number of data points. The automatic mode chooses the optimum number of points for the fastest measurement time with acceptable repeatability. The minimum number of points that could be used is determined by the sweep time and the sampling rate. You can increase the length of the measured time record (capture more of the burst) by increasing the number of points, but the measurement will take longer (2048 is the default in *Auto*).

ManualsPlus.com

Res BW - This key is always grayed out. However, it allows you to see the resolution bandwidth that is derived from the combination of sweep time, data points, and FFT segments.

Num FFT Seg - The automatic mode selects the optimum number of FFT segments to measure the offset, while making the fastest possible measurement.

Relative Atten - Allows you to set a relative amount of attenuation for the measurements made at your offsets. The amount of attenuation is always specified relative to the attenuation that is required to measure the carrier channel. Since the offset channel power is lower than the carrier channel power, less attenuation is required to measure the offset channel and you get wider dynamic range for the measurement.

- *Meas Type* - Allows you to access the menu to select one of the measurement reference types.
  - *Total Pwr Ref* - Select this to set the total carrier power to the measurement reference level and the measured data is shown in dBc and dBm.
  - *PSD Ref* - Select this to set the mean power spectral density of the carrier to the measurement reference level and the measured data is shown in dB and dBm/Hz.
- *Fast ACP* - Allows you to increase the speed of the measurement. A time domain computation method is used rather than an FFT transformation. When this faster measurement method is selected, repeatability is slightly reduced.
- *Spectrum Trace* - Turns off the spectrum trace data calculations. This is only applicable when using the Spectrum View. It speeds up the display of the other measured data values by not calculating the spectrum trace.
- *Limit Test* - Turns off the limit test function.

Changing the View

The *View/Trace* key accesses the menu to select either *Bar Graph* or *Spectrum* for the measurement result, depending on the *Sweep Type* setting.

- *Bar Graph* - In the factory default condition 5 of the total integration power levels, centered at the carrier frequency and±750.0 kHz and ±1.98 MHz offset frequencies, are shown in the figure for the “Results” section. The corresponding measured data is shown in the text window. Depending on the *Meas Type* selection, one of the two following displays is obtained:

ManualsPlus.com

`Bar Graph (Total Pwr Ref)` - A histogram of powers referenced to the total power

`Bar Graph (PSD Ref)` - A histogram of powers referenced to the mean power spectral density of the carrier in dBm/Hz

- *Spectrum* - In the factory default condition, the frequency spectrum with the FFT sweep type is displayed with the bandwidth marker lines in the graph window. The corresponding measured data in the text window is the total integration power levels, in dBc and dBm, within the defined bandwidth as shown in the figure below.

Figure 4-11 ACP Measurement - Spectrum View

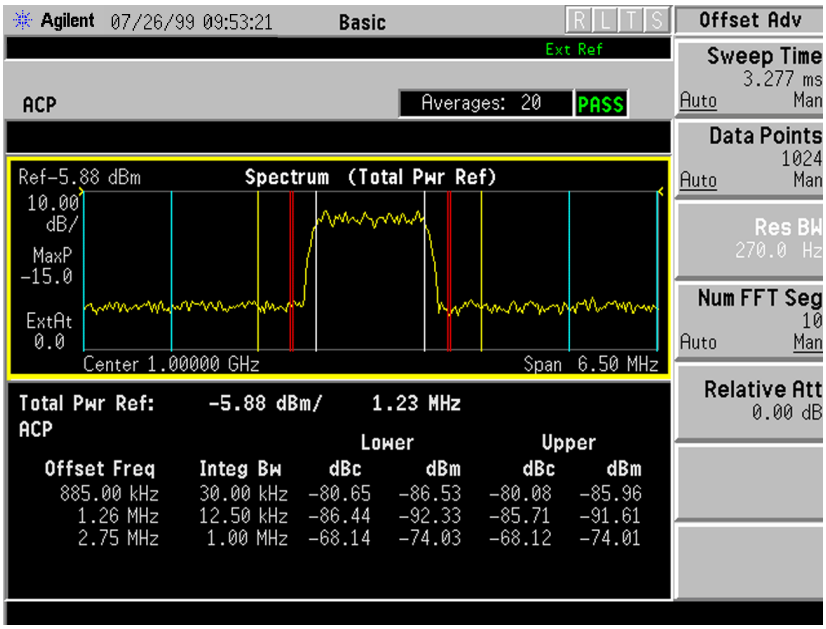

Depending on the *Meas Type* setting, one of the two following displays is obtained:

`Spectrum (Total Pwr Ref)` - A spectrum display referenced to the total power

`Spectrum (PSD Ref)` - A spectrum display referenced to the mean power spectral density of the carrier in dBm/Hz

You can improve the update speed of the displayed data values by turning off the spectrum trace in *Meas Setup*.

ManualsPlus.com

Troubleshooting Hints

This adjacent channel power ratio measurement can reveal degraded or defective parts in the transmitter section of the UUT. The following examples are those areas to be checked further.

- Some faults in the DC power supply control of the transmitter power amplifier, RF power controller of the pre-power amplifier stage, or I/Q control of the baseband stage.
- Some degradation in the gain and output power level of the amplifier due to the degraded gain control and/or increased distortion.
- Some degradation of the amplifier linearity and other performance characteristics.

Power amplifiers are one of the final stage elements of a base or mobile transmitter and are a critical part of meeting the important power and spectral efficiency specifications. Since ACP measures the spectral response of the amplifier to a complex wideband signal, it is a key measurement linking amplifier linearity and other performance characteristics to the stringent system specifications.

ManualsPlus.com

Making the Channel Power Measurement

Purpose

The Channel Power measurement is a common test used in the wireless industry to measure the total transmitted power of a radio within a defined frequency channel. This procedure measures the total power within the defined channel. This measurement is applied to design, characterize, evaluate, and verify transmitters and their components or devices for base stations and mobile stations.

Measurement Method

The Channel Power measurement reports the total transmitted power within the channel bandwidth. The measurement acquires a number of points representing the input signal in the time domain. It transforms this information into the frequency domain using FFT and then calculates the channel power. The effective resolution bandwidth of the frequency domain trace is proportional to the number of points acquired for FFT. The fastest FFT process is achieved using a number of acquired points that is a power of 2 (for example: 64, 128, 512).

Since the measurement is optimized for speed and accuracy, you are permitted to change only the number of acquired data points in powers of 2, not the actual resolution bandwidth which is shown in gray. However, if absolute sweep time is required, it can be changed to the user's specific value at the expense of reduced speed. At no time will both sweep time and data points be set to manual because of conflicting parameter settings. This flexibility is available through the *Advanced* menu of the channel power measurement.

To improve repeatability, you can increase either the number of averages or the number of data points with longer time record length. The channel power graph is shown in the graph window, while the absolute channel power in dBm and the mean power spectral density in dBm/Hz are shown in the text window.

For channel power measurements using baseband I/Q inputs (available with Option B7C) see "Using Baseband I/Q Inputs (Option B7C)" on page 151.

ManualsPlus.com

Making the Measurement

NOTE The factory default settings provide a good starting point. You may want to change some of the settings. Press *Meas Setup*, *More (1 of 2)*, *Restore Meas Defaults* at any time to return all parameters for the current measurement to their default settings.

Select the desired center frequency as described in “Changing the Frequency Channel.”

Press *MEASURE*, *Channel Power* to immediately make a channel power measurement.

To change any of the measurement parameters from the factory default values, refer to the “Changing the Measurement Setup” section.

To make channel power measurements using baseband I/Q input signals, refer to the section on “Using Option B7C Baseband I/Q Inputs.”

Results

The next figure is an example of a `Channel Power` measurement result. The channel power graph is shown in the graph window. The absolute channel power and its mean power spectral density are shown in the text window.

Figure 4-12 Channel Power Measurement

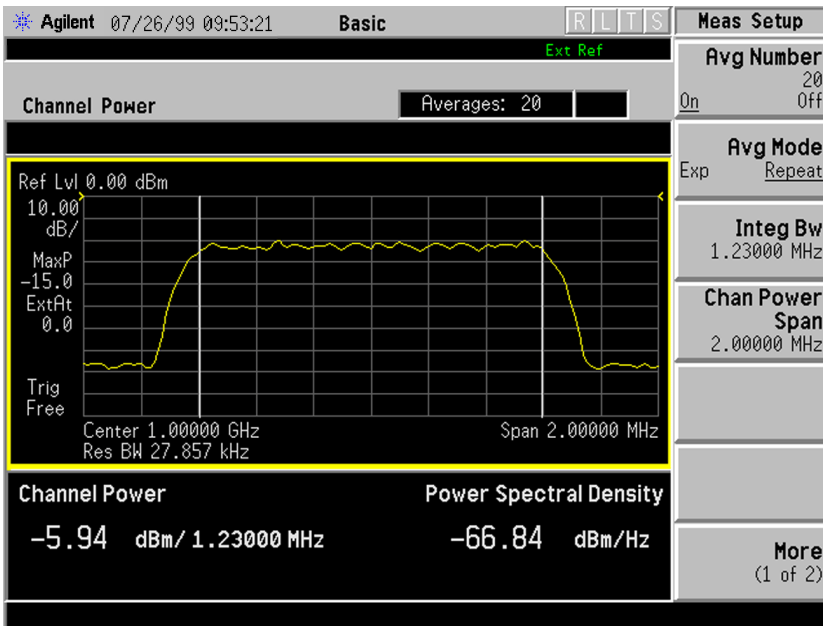

ManualsPlus.com

Changing the Measurement Setup

The next table shows the factory default settings for channel power measurements.

NOTE Parameters under the *Advanced* key seldom need to be changed. Any changes from the factory default values may result in invalid measurement data.

Table 4-5 Channel Power Measurement Defaults

Measurement Parameter	Factory Default Condition
Meas Setup:	
Avg Number	20; On
Avg Mode	Repeat
Integ BW[a]	1.23000 MHz
Chan Power Span[a]	2.00000 MHz
Advanced	
Sweep Time	68.0 µs; Auto
Data Points	512; Auto
Res BW (grayed out)	27.857 kHz (grayed out)
Trig Source	Free Run (Immediate)

a. The Integ BW setting proportionally changes the Chan Power Span setting up to 10 MHz.

Make sure the *Channel Power* measurement is selected under the *MEASURE* menu. The *Meas Setup* key accesses the menu which allows you to modify the average number and average mode for this measurement.

The following parameters can be changed according to your measurement requirement:

- *Integ BW* - Allows you to specify the integration bandwidth in which the power is measured. The range is 1.000 kHz to 10.0000 MHz with 1 Hz resolution. Since *Integ BW* is coupled to *Chan Power Span* in the factory default condition, if you change the integration bandwidth setting, the channel power span setting changes by a proportional amount, 1.626 times the integration bandwidth, until a limit value is reached.

ManualsPlus.com

- *Chan Power Span* - Allows you to set the frequency span for the channel power measurement. The range is 1.000 kHz to 10.0000 MHz with 1 Hz resolution. This span is used for the current integration bandwidth setting. Since *Chan Power Span* is coupled to *Integ BW* in the factory default condition, if you change the integration bandwidth setting, the channel power span setting changes by a proportional amount, 1.626 times the integration bandwidth, until a limit value is reached. However, the channel power span can be individually set.
- *Advanced* - Allows you to access the following menu to modify the channel power measurement parameters:
  - *Sweep Time* - Allows you to manually change the sweep time and also to toggle the sweep time control between *Auto* and *Man* (manual). The range is 1.0 µs to 50.00 ms with 1 µs resolution. If set to *Auto*, the sweep time derived from the data point setting is shown on this key regardless of the manual entry range.
  - *Data Points* - Allows you to select the number of data points and also to toggle the data point control between *Auto* and *Man* (manual). The range is 64 to 65536 with the acceptable entry in powers of 2 (for example: 64, 128, 512). If set to *Auto*, the optimum number of points is determined for the fastest measurement time with acceptable repeatability. The minimum number of points that could be used is determined by the sweep time and the sampling rate. You can increase the length of the measured time record (capture more of the burst) by increasing the number of points, but the measurement will take longer.
  - *Res BW* - Shows information on the resolution bandwidth derived from the sweep time. This key is always grayed out.
  - *Trig Source* - Allows you to choose a trigger source from *Free Run (Immediate)*, *Video (IF Envlp)*, *RF Burst (Wideband)*, *Ext Front*, *Ext Rear*, *Frame*, *I/Q Input*, or *Line*.

ManualsPlus.com

Changing the Display

The *AMPLITUDE Y Scale* key accesses the menu to set the desired vertical scale and associated settings:

- *Scale/Div* - Allows you to enter a numeric value to change the vertical display sensitivity. The range is 0.10 to 20.00 dB with 0.01 dB resolution. The default setting is 10.00 dB. However, since the *Scale Coupling* is defaulted to *On*, this value is automatically determined by the measurement result.
- *Ref Value* - Allows you to set the absolute power reference value ranging from –250.00 to 250.00 dBm with 0.01 dB resolution. The default setting is 10.00 dBm. However, since the *Scale Coupling* is defaulted to *On*, this value is automatically determined by the measurement result.
- *Ref Position* - Allows you to set the display reference position to either *Top*, *Ctr* (center), or *Bot* (bottom). The default setting is *Top*.
- *Scale Coupling* - Allows you to toggle the scale coupling function between *On* and *Off*. The default setting is *On*. Upon pressing the *Restart* front-panel key or *Restart* softkey under the *Meas Control* menu, this function automatically determines the scale per division and reference values based on the measurement results.

Using the Marker

The *Marker* key is not available for this measurement function.

Troubleshooting Hints

If an external attenuator is used, be sure to use the *Ext RF Atten* key to include the attenuation value in the displayed measurement result.

The channel power measurement, along with the adjacent channel power ratio measurement and spectrum measurements, can reveal the effects of degraded or defective parts in the transmitter section of the UUT. The following are areas of concern which can contribute to performance degradation:

- DC power supply control of the transmitter power amplifier, RF power control of the pre-power amplifier stage, and/or I/Q control of the baseband stage.
- Gain and output power levels of the power amplifier, caused by degraded gain control and/or increased distortion.
- Amplifier linearity.

ManualsPlus.com

Making the Power Stat CCDF Measurement

Purpose

Many of the digitally modulated signals now look noise-like in the time and frequency domain. This means that statistical measurements of the signals can be a useful characterization. Power Complementary Cumulative Distribution Function (CCDF) curves characterize the higher level power statistics of a digitally modulated signal. The curves can be useful in determining design parameters for digital communications systems.

The power statistics CCDF measurement can be affected by many factors. For example, modulation filtering, modulation format, combining the multiple signals at different frequencies, number of active codes and correlation between symbols on different codes with spread spectrum systems. These factors are all related to modulation and signal parameters. Factors like signal compression and expansion by non-linear components, group delay distortion from filtering, and power control within the observation interval also affect the measurement.

Measurement Method

The power measured in power statistics CCDF curves is actually instantaneous envelope power defined by the equation:

$$P = (I^2 + Q^2) / Z_o$$

(where I and Q are the quadrature voltage components of the waveform and Z_o is the characteristic impedance).

A CCDF curve is defined by how much time the waveform spends at or above a given power level. The percent of time the signal spends at or above the level defines the probability for that particular power level. To make the power statistics CCDF measurement, the transmitter tester uses digital signal processing (DSP) to sample the input signal in the channel bandwidth.

The Gaussian distribution line as the band-limited gaussian noise CCDF reference line, the user-definable reference trace, and the currently measured trace are shown on a semi-log graph. If the currently measured trace is above the user reference trace, it means that the higher peak power levels against the average power are included in the input signal.

For power statistics CCDF measurements using baseband I/Q inputs see “Using Baseband I/Q Inputs (Option B7C)” on page 151.

ManualsPlus.com

Making the Measurement

NOTE The factory default settings provide a good starting point. For special requirements, you may need to change some of the settings. Press *Meas Setup*, *More (1 of 2)*, *Restore Meas Defaults* at any time to return all parameters for the current measurement to their default settings.

Select the desired center frequency as described in "Selecting the Frequency/Channel" on page 86.

Press *Measure*, *Power Stat CCDF* to immediately make a power statistics CCDF measurement.

To change any of the measurement parameters from the factory default values, refer to "Changing the Measurement Setup" on page 138.

Results

The next figure shows an example result of `Power Stat CCDF` measurements in the graph window. The average power and its probability are shown in the text window.

Figure 4-13 Power Statistics CCDF Measurement

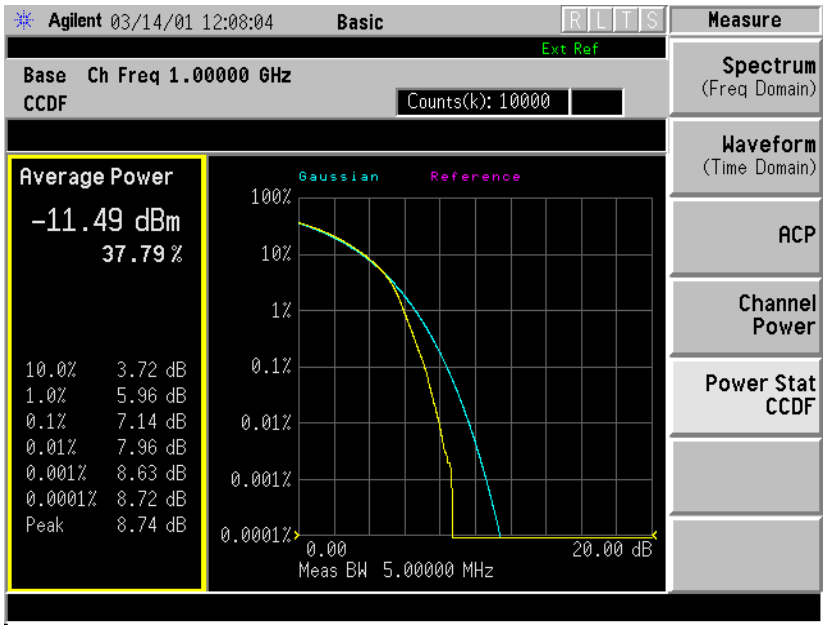

ManualsPlus.com

Changing the Measurement Setup

The next table shows the factory default settings for power statistics CCDF measurements.

Table 4-6 Power Statistics CCDF Measurement Defaults

Measurement Parameter	Factory Default Condition
Meas Setup:	
Meas BW	5.00000 MHz
Counts	10.0000 Mpoints
Meas Interval	1.000 ms
Trig Source	Free Run (Immediate)
Display:	
Ref Trace	Off
Gaussian Line	On

Make sure the *Power Stat CCDF* measurement is selected under the *Measure* menu. Press the *Meas Setup* key to access the menu which allows you to modify the trigger source for this measurement as described in "Measurement Setup" on page 90. In addition, the following parameters can be modified.

- *Meas BW* - Allows you to set the measurement bandwidth according to the channel bandwidth. The range is 10.000 kHz to 6.70000 MHz with 0.1 kHz resolution.
- *Counts* - Allows you to set the accumulated number of sampling points for data acquisition. The range is 1.000 kpoints to 2.000 Gpoints with 1 or 10 kpoints resolution. While this key is activated, enter a value from the numeric keypad by terminating with one of the unit keys shown.
- *Meas Interval* - Allows you to specify the time interval over which the measurement is made. The range is 100.0 µs to 10.00 ms with 1 µs resolution.

ManualsPlus.com

Changing the View

The *View/Trace* key is not available for this measurement.

Changing the Display

The *Display* key allows you to control the desired trace and line displays of the power statistics CCDF curves. The currently measured curve is always shown. See Figure 4-13 on page 137 for an example of a power statistics CCDF measurement display.

- *Store Ref Trace* - Allows you to copy the currently measured curve as the user-definable reference trace. The captured data will remain until the other mode is chosen. Pressing this key refreshes the reference trace.
- *Ref Trace* - Allows you to toggle the reference trace display function between *On* and *Off*.
- *Gaussian Line* - Allows you to toggle the Gaussian line display function between *On* and *Off*.

The *Span X Scale* key accesses the menu to set the desired horizontal scale.

- *Scale/Div* - Allows you to enter a numeric value to change the horizontal display sensitivity. The range is 0.10 to 20.00 dB with 0.01 dB resolution. The default setting is 2.00 dB.

ManualsPlus.com

Using the Markers

The *Marker* front-panel key accesses the menu to configure the markers.

- *Select* - Allows you to activate up to four markers with the corresponding numbers, respectively. The selected number is underlined and its function is defined by pressing the *Function* key. The default selection is 1.
- *Normal* - Allows you to activate the selected marker to read the power level and probability of the marker position on the selected curve, for example, which is controlled by the RPG knob.
- *Delta* - Allows you to read the differences in the power levels and probabilities between the selected marker and the next.
- *Function* - Allows you to set the selected marker function to *Band Power*, *Noise*, or *Off*. The default setting is *Off*. The *Band Power* and *Noise* functions are not available for this measurement.
- *Trace* - Allows you to place the selected marker on the *Measured*, *Gaussian*, or *Reference* curve. The default setting is *Measured*.
- *Off* - Allows you to turn off the selected marker.
- *Shape* - Allows you to access the menu to set the selected marker shape to *Diamond*, *Line*, *Square*, or *Cross*. The default setting is *Diamond*.
- *Marker All Off* - Allows you to turn off all of the markers.

Troubleshooting Hints

The power statistics CCDF measurement can contribute in setting the signal power specifications for design criteria for systems, amplifiers, and other components. For example, it can help determine the optimum operating point to adjust each code timing for appropriate peak/average power ratio throughout the wide channel bandwidth of the transmitter for a W-CDMA system.

As this measurement is a new method, there will be some correlations between CCDF curve degradation and digital radio system measurement parameters such as BER, FER, code domain power, and ACPR. Some studies will help set standards for radio design by specifying the maximum allowed CCDF curve degradation for specific systems.

ManualsPlus.com

Service Measurements

Service measurements help you check the functionality of your instrument. An exception is the power vs. time measurement which is intended strictly for diagnostic use by Agilent Technologies service personnel.

The spectrum and waveform measurements that can be accessed through the service menu are explained in the section on basic measurements; the versions of these measurements found by accessing the *Basic* and the *Service* keys are identical.

To access the Service mode press the *Mode* key and select the *Service* softkey. The following service measurements are available:

Spectrum on page 97.

Waveform on page 110.

Timebase Frequency on page 142.

50 MHz Amptd on page 144.

Sensors on page 146.

Front Panel Test on page 148.

Pwr vs Time on page 150

.

ManualsPlus.com

Timebase Frequency

Purpose

In the absence of a frequency counter, the measurement quickly determines the frequency difference between the instrument's 10 MHz reference oscillator signal and an accurate, external 10 MHz frequency standard.

NOTE The timebase frequency check is not as accurate as a measurement of the `10 MHz Out` signal (rear panel) using a frequency counter referenced to a frequency standard.

Measurement Method

The internal 10 MHz reference signal is compared with a reliable external 10 MHz signal which the user inputs into the front panel RF connector. The transmitter tester subtracts its 10 MHz reference from the input signal and displays the frequency difference.

Test Setup

An accurate external 10 MHz frequency signal, such as a house standard, is connected to an attenuator, which attenuates the signal to 0 dB. The attenuated 10 MHz signal is connected to the RF input of the transmitter tester. Pressing *Mode*, *Service*, *Measure*, **Timebase Frequency** will result in the display of data described below.

NOTE When setting up this test ensure that the reference is set to internal. To check this press *System*, *Reference*. The *Freq Ref* softkey allows you to toggle between *Int* (internal) and *Ext* (external). Make sure *Int* is underlined.

ManualsPlus.com

Results

Window One (Time Record)

Shows an I/Q display of the frequency difference between the input signal and the internal 10 MHz signal.

Window Two (Magnitude)

Shows a polar representation of window one. This window shows how much the phase error changes during the sampling period.

Window Three (Freq Error)

Shows a stripchart of the timebase error in MHz vs. time. Each dot on the horizontal axis is one sampling period.

Window Four (numeric results)

Freq error: The error difference between the 10 MHz input signal and the internal 10 MHz signal.
Magnitude: The magnitude of the external 10 MHz signal. While this is an uncalibrated value, it gives the user an idea of the signal amplitude.
Adjusting: A `0` will appear if the timebase adjustment is not being performed. A `1` will appear if the adjustment is being performed.

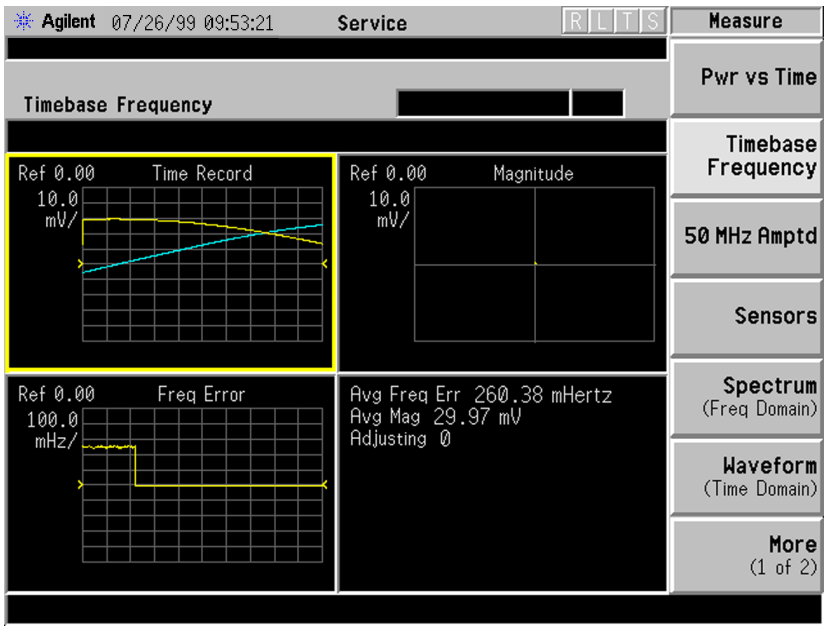

ManualsPlus.com

50 MHz Amplitude

Purpose

To check the amplitude of the internal 50 MHz amplitude reference signal.

Measurement Method

The amplitude of an internal 50 MHz reference signal is compared with the amplitude of a stable external 50 MHz signal which has been measured with a power meter and then connected to the front panel RF connector.

Test Setup

The 50 MHz amplitude feature enables you to measure the amplitude of the internal 50 MHz reference signal. The amplitude of an internal 50 MHz reference signal is adjusted as close as possible to –25.00 dBm, based on the relative measurement of the reliable external 50 MHz signal, which is input by the user into the front panel RF connector. Follow these steps to measure the amplitude of the 50 MHz amplitude reference signal (a power meter and a reliable external source will be needed to perform this test):

1. Set the external source to a frequency of 50 MHz at a power level of –25 dBm (± 2 dBm).
2. Connect the external source to the power meter through a cable. Adjust the power output of the source until the power meter reads –25.00 dBm, or as close to –25.00 dBm, as possible.
3. Disconnect the power sensor and connect the source to the transmitter tester.
4. Press *Mode*, *Service*, *Measure*, *50 MHz Amptd* on the transmitter tester. See next page for results.

ManualsPlus.com

Results

Window One (RF Magnitude)

Shows the amplitude (unitless) of the external source as measured by the transmitter tester.

Window Two (Cal Magnitude)

Shows the amplitude (unitless) of the 50 MHz input calibrator.

Window Three (Error)

Shows a stripchart of the amplitude error between the 50 MHz internal calibrator and the external source amplitude.

Window Four (numeric results)

Cal Amplitude: The instrument's internal ADC level when measuring the internal 50 MHz calibrator amplitude.
RF Amplitude: The instrument's internal ADC level when measuring the external source amplitude
Error: The difference in ADC level between the 50 MHz internal calibrator amplitude and the source amplitude.

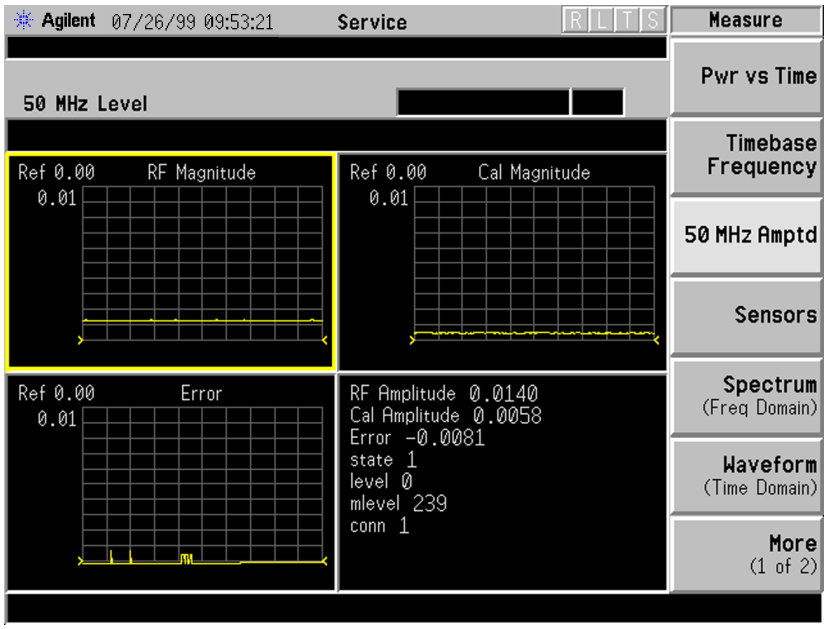

ManualsPlus.com

Sensors

Purpose

The temperature of the RF board will vary over time and can adversely affect the IF signal amplitude. Sensors on the RF board monitor changes in temperature.

Measurement Method

The sensor measurements are generated internally and do not require any user interaction.

Test Setup

Press *Mode*, *Service*, *Measure*, **Sensors**.

Results

Window One (IF Signal Level)

Shows a stripchart of the IF signal amplitude in dBm.

Window Two (Cal Osc Level)

The Cal Oscillator window is not implemented.

Window Three (RF Temperature)

Shows a stripchart of the RF assembly temperature in Celsius.

Window Four (numeric results)

IF Signal Level: The ADC number for the detected 21.4 MHz IF signal at the input to the AIF. Typical values with the input attenuator set to 0 dB: 20 (no signal applied); 23(- 10 dBm); 27(- 5 dBm), and 38(0 dBm).

Cal Osc Level: Not implemented.

RF Temp: Shows current temperature in Celsius.

ManualsPlus.com

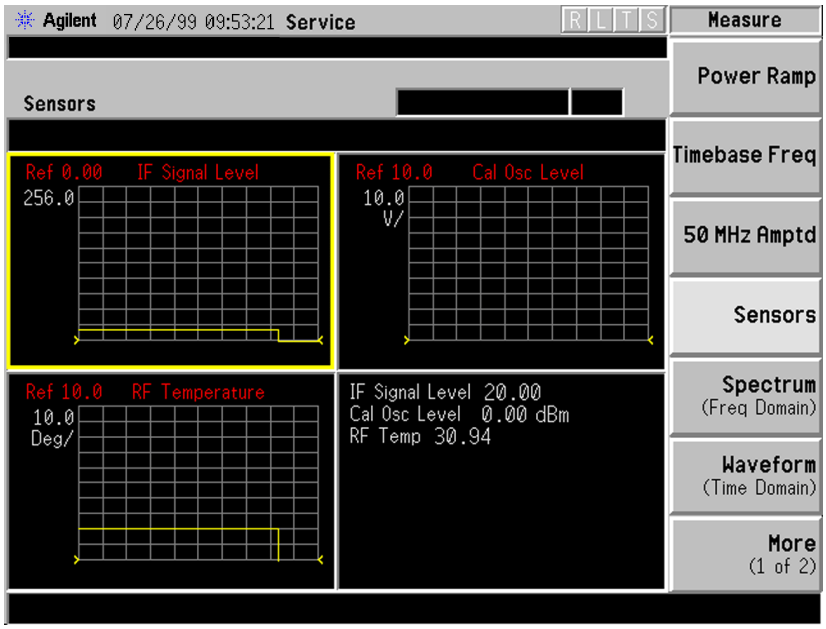

ManualsPlus.com

Front Panel Test

Purpose

The front panel test checks the functionality of the instrument front panel keys and the RPG knob.

Test Setup

Press *Measure*, *More (1 of 2)*, *Front Panel Test*. Once the **Front Panel Test** key is pressed you will see a display with three columns appear on the screen. The entries on the left side of each column describe a key. On the right side of each entry you will see a `0`.

The front panel test requires you to press each of the front panel keys (in any order, with the exception of the *ESC* key, which *must* be pressed last), and to turn the RPG knob. The first time you press a key a `1` will replace the `0` that originally appeared to the right of the key column. Each additional instance of pressing a given key will result in an increment to the number listed in the column to the right of the key description. For example if you press the *Zoom* key four times, you will see a `4` to the right of the `Zoom` entry.

Rotating the RPG knob will result in a rapidly incrementing, or decrementing value appearing in the column to the right of the `RPG Knob` entry. Rotate the RPG knob clockwise and counter-clockwise. You will see negative or positive values appear, in ascending or descending order, depending on the direction you have turned the RPG knob.

Note that the two step keys (the up and down arrow keys) are described as the `Rpg Dn` and `Rpg Up` keys.

The *ESC* key must be pressed only after all other keys have been pressed and the RPG knob has been rotated; pressing the *ESC* key will cause the front panel test to be cancelled.

ManualsPlus.com

Results

The front panel test display shows a list of front panel keys and the RPG knob, followed by a “times-pressed” indicator. You will see a count of the number of times you have pressed a key next to that key on the display, except for the knob, next to which you will see positive or negative numbers in increments of 1.

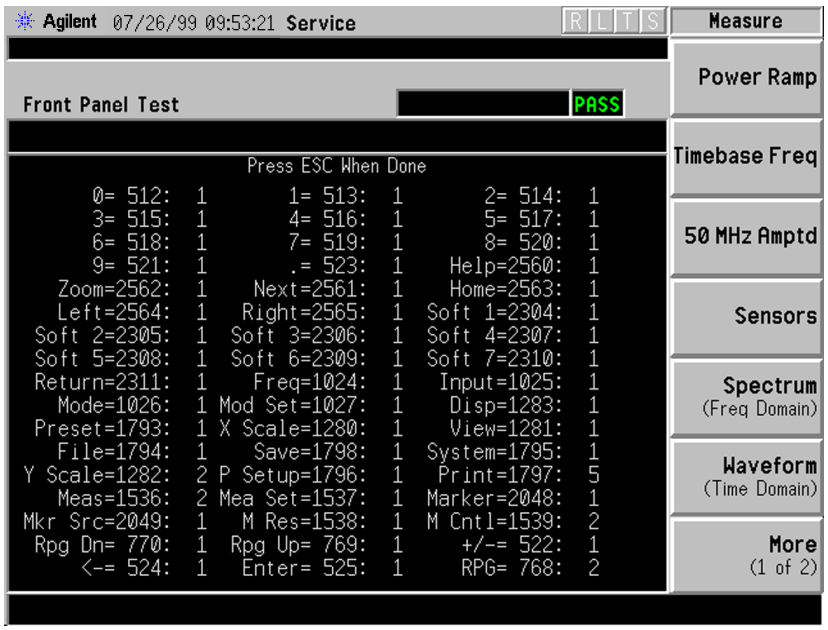

Troubleshooting Hints

If the front panel check fails contact the Agilent Technologies instrument support center. See page 184.

ManualsPlus.com

Service Power vs. Time Measurement

Purpose

This measurement is provided for internal Agilent Technologies manufacturing use.

ManualsPlus.com

Using Baseband I/Q Inputs (Option B7C)

Option B7C, Baseband I/Q Inputs, provides the ability to analyze baseband I/Q signal characteristics of mobile and base station transmitters.

This option may be used only in conjunction with the following personalities:

- Basic mode (available in all VSA Series Transmitter Testers)
- Option BAF W-CDMA Measurement Personality
- Option B78 cdma2000 Measurement Personality

ManualsPlus.com

What are Baseband I/Q Inputs?

Option B7C consists of a Baseband Input module, four 50 Ω BNC connectors, and internal cabling. The four BNC connectors are grouped into pairs at the upper left corner of the front panel. The upper two connectors labeled “I” and “Q” are the “unbalanced” inputs.

In practice, an unbalanced or “single ended” baseband measurement of an I or Q signal is made using a probe connected to the I or Q connector. A simultaneous I/Q unbalanced single ended measurement may be made using two probes connected to the I and Q input connectors.

If “balanced” signals are available, they may be used to make a more accurate measurement. Balanced signals are signals present in two separate conductors, are symmetrical about ground, and are opposite in polarity, or out of phase by 180 degrees.

Measurements using balanced signals can have a higher signal to noise ratio, improving accuracy. Noise coupled into each conductor equally in a “common mode” to both signals may be separated from the signal. The measure of this separation is “common-mode rejection.”

To make a balanced measurement, the lower two connectors labeled “$\overline{I}$” and “$\overline{Q}$” are used in conjunction with the I and Q inputs. The terms “I-bar” and “Q-bar” may be applied to the signals, as well as the inputs themselves. Probes (customer provided) must be used to input balanced baseband I/Q signals. This may be referred to as a balanced measurement.

Balanced baseband measurements are made using the I and $\overline{I}$ connectors for I only signal measurements, while the Q and $\overline{Q}$ connectors are used for a Q only signal measurement. Balanced measurements of I/Q require differential probe connections to all four input connectors. For details of probe selection and use, refer to “Selecting Input Probes for Baseband Measurements” on page 156.

ManualsPlus.com

What are Baseband I/Q Signals?

In transmitters, the term baseband I/Q refers to signals that are the fundamental products of individual I/Q modulators, before the I and Q component signals are combined, and before up conversion to IF or RF frequencies.

In receivers, baseband I/Q analysis may be used to test the I and Q products of I/Q demodulators, after an RF signal has been down converted and demodulated.

Why Make Measurements at Baseband?

Baseband I/Q measurements are a valuable means of making qualitative analyses of the following operating characteristics:

- I/Q signal layer access for performing format-specific demodulation measurements (e.g. CDMA, GSM, W-CDMA):
- Modulation Accuracy – i.e. I/Q plane metrics
  - — Rho
  - — Error Vector Magnitude; RMS, peak, 95%
  - — carrier feed-through
  - — frequency error
  - — magnitude and phase errors
- Code-domain analysis (including code-specific metrics)
- CCDF of I^2+Q^2
- Single Sideband (SSB) metrics for assessing output quality
- Basic analysis of I and Q signals in isolation including: DC content, RMS, P-P levels, CCDF of each channel

Comparisons of measurements made at baseband and RF frequencies produced by the same device are especially revealing. Once signal integrity is verified at baseband, impairments can be traced to specific stages of up conversion, amplification, or filtering by RF analysis. Likewise, impairments to signal quality that are apparent at RF frequencies may be traceable to baseband using baseband analysis.

ManualsPlus.com

Making Measurements with Baseband I/Q Inputs

Baseband I/Q measurements are similar to RF measurements. To avoid duplication, this section describes only the details unique to using the baseband I/Q inputs. For generic measurement details, refer to the previous “Making Measurements” sections.

The following measurements are available for use with the baseband I/Q inputs:

- Channel Power
- Power Stat CCDF
- Spectrum (Frequency Domain)
- Waveform (Time Domain)

NOTE The following measurement is not available for use with Option B7C Baseband I/Q Inputs:

- ACP

ManualsPlus.com

Baseband I/Q Measurement Overview

To make measurements using Baseband I/Q Inputs, you must make the following selections:

- Select a measurement that supports baseband I/Q inputs. For details see “Making Measurements with Baseband I/Q Inputs” on page 154 for details.
- Select the appropriate circuit location and probe(s) for measurements. For details see“Selecting Input Probes for Baseband Measurements” on page 156.
- Select baseband I/Q input connectors. For details see “Selecting Baseband I/Q Input Connectors” on page 159.
- Adjust I/Q Setup if desired. For details see “Setting Up Baseband I/Q Inputs” on page 161.
- Select baseband I/Q input impedance. For details see “Selecting Baseband I/Q Input Impedance” on page 164.
- Select a Baseband I/Q measurement results view. For details see “Baseband I/Q Measurement Views” on page 165.

ManualsPlus.com

Selecting Input Probes for Baseband Measurements

The selection of baseband measurement probe(s) and measurement method is primarily dependent on the location of the measurement point in the circuit. The probe must sample voltages without imposing an inappropriate load on the circuit.

The following four measurement methods may be used with baseband I/Q inputs:

- *50 Ω Unbalanced* - This is the measurement method of choice if single ended or unbalanced baseband I and/or Q signals are available in 50 Ω coaxial transmission lines and are terminated in a coaxial connectors. Adapters necessary to convert to a 50 Ω BNC male connector must be of 50 Ω impedance. The methods are as follows:
  - — I only measurement using one single-ended probe connected to the I input connector
  - — Q only measurement using one single-ended probe connected to the Q input connector
  - — I/Q measurement using two single-ended probes connected to the I and Q input connectors
- *600 Ω Balanced* - This is the measurement method of choice if balanced baseband signals having a 600 Ω impedance are available. The methods are as follows:
  - — I only measurement using one differential probe or two single-ended probes connected to the I and I inputs
  - — Q only measurement using one differential probe or two single-ended probes connected to the Q and Q inputs
  - — I/Q measurement using two differential probes or four single-ended probes connected to the I, Q, I, and Q input connectors

ManualsPlus.com

- *1 M Ω Unbalanced* - High input impedance is the measurement method of choice if single ended or unbalanced baseband signals to be measured lie in a trace on a circuit board and are sensitive to loading by the probe. When making 1 M Ω measurements, the reference input impedance may be adjusted. For details refer to "Selecting Baseband I/Q Inputs" on page 159. 1 M Ω unbalanced measurements may be made as follows:

  — I only measurement using one single-ended probe connected to the I input connector

  — Q only measurement using one single-ended probe connected to the Q input connector

  — I/Q measurement using two single-ended probes connected to the I and Q input connectors

- *1 M Ω Balanced* - High input impedance measurements may also be made if differential or balanced signals are available. 1 M Ω balanced measurements may be made as follows:

  — I only measurement using one differential probe or two single-ended probes connected to the I and $\overline{I}$ inputs

  — Q only measurement using one differential probe or two single-ended probes connected to the Q and $\overline{Q}$ inputs

  — I/Q measurement using two differential probes or four single-ended probes connected to the I, Q, $\overline{I}$, and $\overline{Q}$ input connectors

  This is the measurement method of choice if differential or balanced baseband signals to be measured lie in a trace on a circuit board and are sensitive to loading by the probe. When making 1 M Ω measurements, the reference input impedance may be adjusted. For details refer to "Selecting Baseband I/Q Inputs" on page 159.

ManualsPlus.com

The following table lists currently available Agilent probes which are suitable for use under various measurement conditions:

Table 4-7 Agilent Probes - Balanced and Unbalanced

Probe Type	Description
Unbalanced (Single Ended)	1144A 800 MHz Active Probe[abc] 54701A 2.5 GHz Active Probe[cd] 1145A 750 MHz 2-Channel Active Probe[abc] 85024A High Frequency Probe[be] 41800A Active Probe[bf] 10020A Resistive Divider Probe[bc] 54006A 6 GHz Passive Divider Probe[g]
Balanced (Differential)	1141A 200 MHz Active Differential Probe[abc] N1025A 1 GHz Active Differential Probe[bh]

a. Not compatible with 3-wire power interface. Needs 1142A power supply. For two channels, you will need either two 1142A power supplies or one 1142A power supply and one 01144-61604 1-input, two-output adapter cable.
b. Two probes needed to cover both I and Q inputs.
c. Output connector is BNC.
d. Not compatible with 3-wire power interface. Requires use of 1143A power supply. 1143A can power two 54701A probes.
e. 85024A bandwidth is 300 kHz to 3 GHz. Output connector is type-N. Power is 3-wire connector (+15v/-12.6v/gnd)
f. 41800A bandwidth is 5 Hz to 500 MHz. Output connector is type-N. Power is 3-wire connector (+15v/-12.6v/gnd)
g. 54006A output connector is 3.5 mm
h. 3.5 mm output connector, requires +/- 15 volt supply

Refer to the current Agilent data sheet for each probe for specific information regarding frequency of operation and power supply requirements.

The Transmitter Tester provides one “three-wire” probe power connector on the front panel. Typically, it can energize one probe. If you plan on operating more than one probe, make sure you provide sufficient external power sources as required.

ManualsPlus.com

Selecting Baseband I/Q Inputs

Baseband I/Q measurements may be made with “unbalanced” inputs using either two connectors (I and Q), or with “balanced” inputs using four connectors (I, Q, $\overline{I}$, and $\overline{Q}$). A variety of high and low input impedances can be selected. This flexibility allows measurements to be made at a maximum number of diagnostic locations in the transmitter circuitry.

To use the Baseband I/Q inputs the instrument must be in BasicMode, or another compatible mode which can utilize the Baseband I/Q input ports. For modes that support Baseband I/Q, the inputs and measurement defaults are activated and visible when either *I only*, *Q only*, or *I/Q* is selected for *Input Port* in the `Input` menu. For modes which cannot support Baseband I/Q, the inputs and defaults are absent.

Selecting Baseband I/Q Input Connectors

Option B7C adds a softkey menu that lets you select I/Q inputs. This menu is located under the *Input/Output* front-panel key in the `Input` menu. To select an input connector press *Input/Output*, *Input Port*. Select the desired input connector(s) from the following choices displayed:

- *RF* - Press to select the 50 Ω "N" RF connector.
- *I/Q* - Select if using 2 connector “unbalanced” or 4 connector “Balanced” I/Q cabling. Complete your selection by choosing the appropriate input impedance and connectors in the section “Selecting Baseband I/Q Inputs” on page 159.
- **I Only** - Select if using I and/or $\overline{I}$ input connectors. Complete your selection by choosing the appropriate input impedance and connectors in the section “Selecting Baseband I/Q Input Impedance” on page 164.
- **Q Only** - Select if using Q and/or $\overline{Q}$ input connectors. Complete your selection by choosing the appropriate input impedance and connectors in the section “Selecting Baseband I/Q Input Impedance” on page 164.
- *50 MHz Ref* - Select to view the 50 MHz CW calibration signal (signal level is approximately -25.0 dBm).

ManualsPlus.com

- *IF Align* - Select to view the IF alignment signal. This signal is available as a diagnostic function, to check the operation of the alignment signal in the case of alignment failure. Once selected, a menu accessing the IF alignment signal parameters is available at the bottom of the Input menu. Either CW, comb, or pulse signals may be selected. Because the alignment signal is input at the IF frequency, it is displayed on any active Spectrum (Freq Domain) window, regardless of center frequency.
- Baseband Align Signal (ON OFF) - Select to view the baseband alignment signal. This is available as a diagnostic function, to check the operation of the alignment signal in the case of alignment failure. Because the alignment signal is input at the IF frequency, it is displayed on any Spectrum (Freq Domain) window.

The `INPUT`, *Input Port* menu is also available under the *Mode Setup* front-panel key.

ManualsPlus.com

Setting Up Baseband I/Q Inputs

Option B7C adds two keys that let you adjust the I/Q inputs; the I/Q Setup key and the I/Q Range key. Both keys are located under the *Input/Output* front panel key in the `Input` menu.

The *I/Q Range* key lets you select one of four levels as an upper limit for the signal being applied to the Baseband I/Q inputs. The level may be selected in units of dBm, dBmv, dBuv, Volts, and Watts. The following table shows the four-level selections available for each unit of measure: The default is 1 Volt.

The *I/Q Range* power levels in Table 4-8 are based on an *I/Q Input Z* of 50 Ω. *I/Q Range* voltage levels are independent of *I/Q Input Z*.

Table 4-8 I/Q Range Settings by Displayed Unit of Measure

Unit of Measure	Highest Setting			Lowest Setting
dBm	13.0 dBm	7.0 dBm	1.0 dBm	–5.1 dBm
dBmv	60 dBmv	54 dBmv	48 dBmv	41.9 dBmv
dBuv	120.0 dBuv	114.0 dBuv	108 dBuv	101.9 dBuv
Volts	1 Volt	500 mV	250 mV	125 mV
Watts	20.0 mW	5.0 mW	1.2 mW	310.0 uW

If *I/Q Range* is set below the default and the error message "`Input Overload`" is displayed, this value may be adjusted to its maximum. Beyond that point, the signal must be attenuated to preserve the measurement accuracy. Using a lower value than the default can provide an increased dynamic measurement range.

I/Q Setup lets you adjust the following:

- I Offset - Use *I Offset* to input a value in Volts to offset the measured I value. The default value is 0.0000 Volts, the min/max values are ± 2.5600 Volts. The tuning increment depends on the *I/Q Range* setting as shown in Table 4-9. This value only affects the displayed results, and does not appear as a correcting voltage at the probe.

ManualsPlus.com

Table 4-9 I and Q Offset Increment vs. I/Q Range

I/Q Range	I and Q Offset Increment
1 Volt	2 mV
500 mV	1 mV
250 mV	.5 mV
125 mV	.25 mV

- Q Offset - Use *Q Offset* to input a value in Volts to offset the measured Q value. The default value is 0.0000 Volts, the min/max values are ± 2.5600 Volts. The tuning increment depends on the *I/Q Range* setting as shown in Table 4-9. This value only affects the displayed results, and does not appear as a correcting voltage at the probe.
- I/Q Input Z - This key lets you access a menu to select an input impedance for baseband I/Q input signals. The selection of input impedance is coupled to a connector "balance" configuration. If *I/Q Input Z* is set to 1 M Ω, the setting for *I/Q Z Ref for Input Z = 1M*Ω key becomes effective. For details, refer to "Selecting Baseband I/Q Input Impedance" on page 164.
- I/Q Z Ref for Input Z = 1M Ω - This key is used to select the 1 M Ω input reference Z value in Ohms. This key is effective only when *I/Q Input Z* is set to a 1 M Ω setting. The default value is 50.0 Ω The value range is 0 Ω to 10 M Ω, with a tuning increment of 1.0 Ω For more details, refer to"Selecting Baseband I/Q Input Impedance" on page 164.

ManualsPlus.com

Figure 4-14 `Input` **Menu with Option B7C Baseband I/Q Inputs Installed**

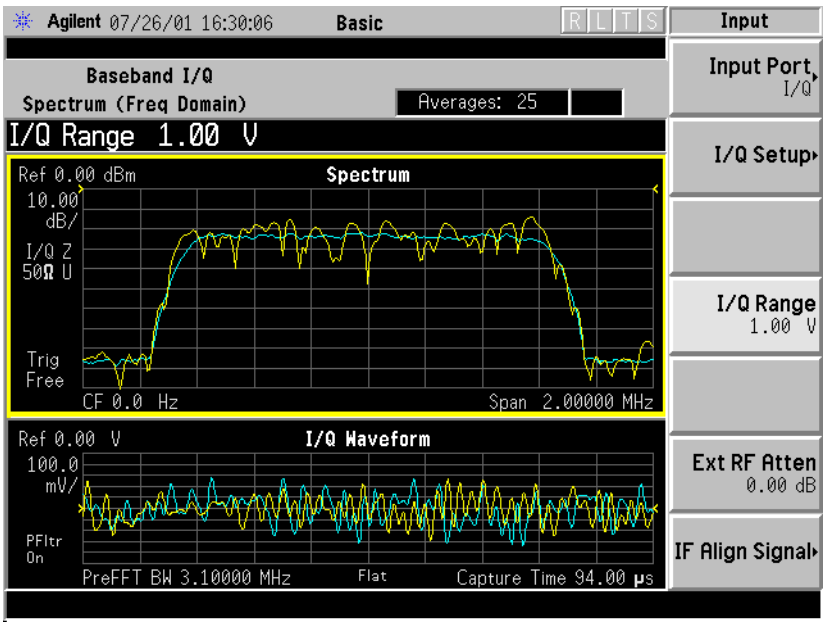

Figure 4-15 `I/Q Setup` **Menu, Option B7C Baseband I/Q Inputs Installed**

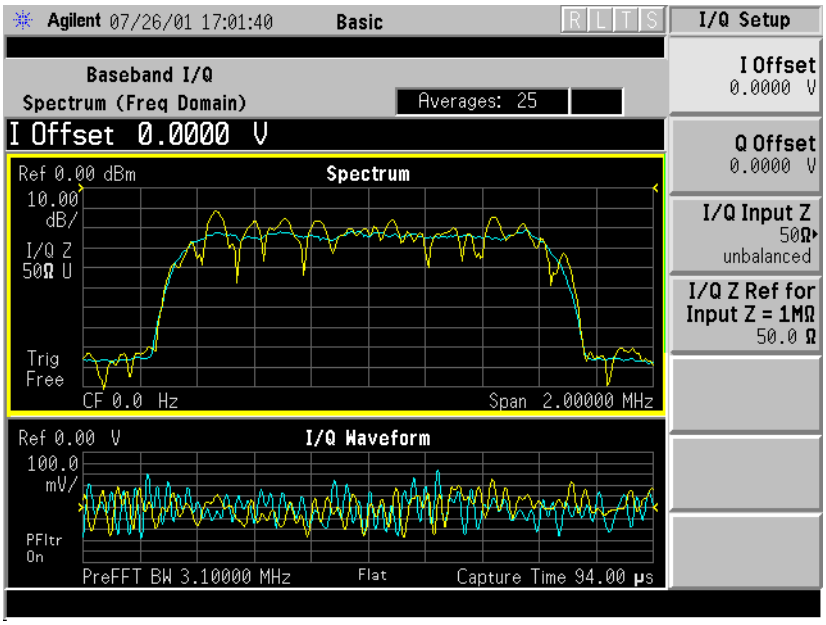

ManualsPlus.com

Selecting Baseband I/Q Input Impedance

The selection of input impedance is coupled to a connector “balance” configuration. “Balance” refers to whether an input is “single-ended” (unbalanced) or is balanced.

To select an input impedance, press *Input/Output*, *I/Q Setup*, *I/Q Input Z* to display the following choices:

- *50 Ω Unbalanced* - Select to use I and/or Q input connectors.
- *600 Ω Balanced* - Select to use either I and $\overline{I}$, Q and $\overline{Q}$, or all four I, Q, $\overline{I}$, and $\overline{Q}$ input connectors.
- *1 M Ω Unbalanced* - Select to use I and/or Q input connectors in an unbalanced mode. When *I/Q Input Z* is set to a 1 M Ω selection (balanced or unbalanced), the setting for *I/Q Z Ref for Input Z = 1M Ω* key may be adjusted. Otherwise, the default value for *I/Q Z Ref = 1 M Ω* is 50 Ω
- *1 M Ω Balanced* - Select to use either I and $\overline{I}$, Q and $\overline{Q}$, or all four I, Q, $\overline{I}$, and $\overline{Q}$ input connectors to make a balanced measurement. When *I/Q Input Z* is set to a 1 M Ω selection (balanced or unbalanced, the setting for *I/Q Z Ref for Input Z = 1M Ω* key may be adjusted. Otherwise, the default value for I/Q Z Ref = 1 M Ω is 50 Ω

You can select *I only* or *Q only* in the *Input/Output*, *Input Port* menu with any impedance selection.

Figure 4-16 `I/Q Input Z` **Menu - Option B7C Baseband I/Q Inputs Installed**

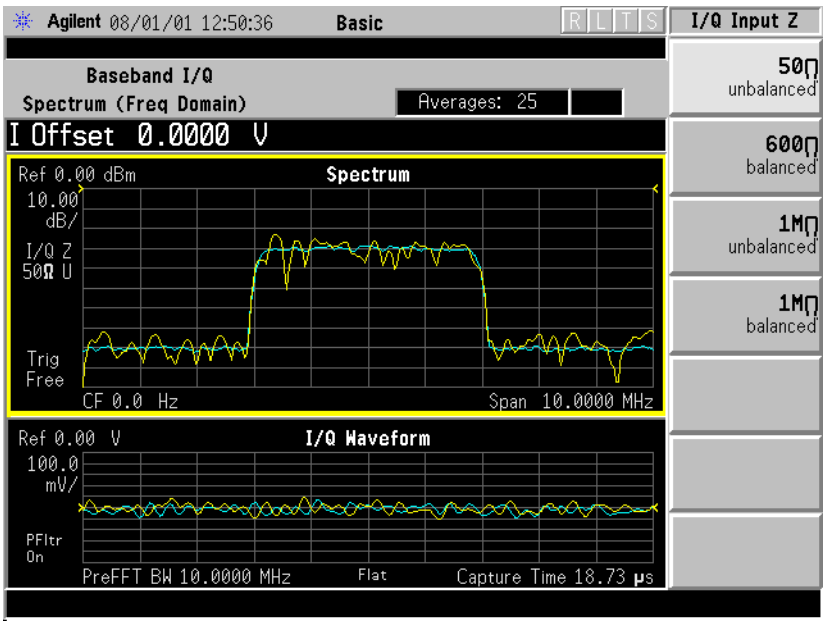

ManualsPlus.com

Baseband I/Q Measurement Views

Measurement result views made in Basic mode are available for baseband signals if they relate to the nature of the signal itself. Many measurements which relate to the characteristics baseband I and Q signals have when mixed and upconverted to signals in the RF spectrum can be made as well. However, measurements which relate to the characteristics of an upconverted signal that lie beyond the bandwidth available to the Baseband I/Q Input circuits can not be measured (the limits are ~5 MHz BW for individual I and Q signals, and ~10 MHz for composite I/Q signals).

Some views are appropriate for use with both RF and Baseband I/Q signals without any modification, while other views must be altered. Some examples of measurements with identical results views are QPSK EVM, Code Domain, and CCDF. For Spectrum measurements, identical views include the I and Q Waveform view and the I/Q Polar view. For Waveform measurements, identical views include the I/Q Waveform view, the Signal Envelope view, and the I/Q Polar view.

At RF frequencies, power measurements are conventionally displayed on a logarithmic vertical scale in dBm units, whereas measurements of baseband signals using Baseband I/Q inputs may be conveniently displayed as voltage using a linear vertical scale as well as a log scale.

Spectrum Views and 0 Hz Center Frequency

Some views must be altered to account for the fundamental difference between RF and baseband I/Q signals. For Spectrum measurements of I/Q signals this includes using a center frequency of 0 Hz for Spectrum views and the Spectrum Linear view. Occupied Bandwidth and Channel Power results are also displayed using a center frequency of 0 Hz.

The center frequency of baseband I/Q Spectrum displays is 0 Hz. Frequencies higher than 0 Hz are displayed as “positive” and those below 0 Hz are “negative”. The “negative” portion of a multi-channel baseband signal below 0 Hz corresponds to the portion of the signal that would lie below the carrier center frequency when it is upconverted, if no spectral inversion occurs. As 0 Hz is a fixed center frequency, the *FREQUENCY Channel* front-panel key has no active menu for baseband I/Q Spectrum measurements.

I only and Q only Spectrum views are conventional, displayed with 0 Hz at the left margin of the x-axis. When upconverted or multiplied, an I only or Q only signal could ultimately lie above or below the carrier center frequency, but in either case it will only occupy half the bandwidth. As 0 Hz is a fixed start frequency, the *FREQUENCY Channel* front panel key has no active menu keys. Use *Span* to change horizontal scale. The center frequency is displayed as half the current *Span*.

ManualsPlus.com

Waveform Views for Baseband I/Q Inputs

For Waveform measurements, two new displays are available exclusively for baseband I/Q input signals; the I and Q Waveform view, which separates the individual I and Q traces, and the I/Q Polar view. Since the x-axis for Waveform measurements is Time, the *FREQUENCY Channel* front-panel key has no active menu for baseband I/Q Waveform measurements. Use *Span* to change horizontal scale. A Linear Envelope waveform view is also available to display baseband signals that employs linear voltage units on the vertical axis.

Waveform Signal Envelope Views of I Only or Q Only

The I and Q Waveform of an I/Q signal is very different from the complex signal displayed in the Waveform Signal Envelope view. That is because the Signal Envelope is a product of both the I and Q modulation waveforms.

However, an I and Q Waveform measurement of an I-only or Q-only signal (with I only or Q only selected as the active input port) is exactly the same signal displayed in the Waveform Signal Envelope view. That is because an I-only or Q-only waveform determines the I-only or Q-only signal envelope. Thus, the Waveform Signal Envelope view can be used to measure an I-only or Q-only waveform directly.

ManualsPlus.com

Comparing RF and Baseband I/Q Measurement Views

The following table compares the measurement views for RF inputs and baseband I/Q inputs.

Table 4-10 RF vs. Baseband I/Q Input Measurement Views, by Measurement

Measurement	Views Available for Measurements Using RF Input	Views Available for Measurements Using Baseband I/Q Inputs	Mods to RF View for Baseband I/Q Inputs
Channel Power	Channel Power	Channel Power	Center Freq = 0 Hz
ACP	FFT, Fast Bar Graph, Spectrum	Measurement Not Available	n/a
Power Stat CCDF	CCDF	CCDF	none
Spectrum (Freq Domain)	Spectrum Spectrum Linear I and Q Waveform I/Q Polar	Spectrum Spectrum Linear I and Q Waveform I/Q Polar	Center Freq = 0 Hz (Spectrum Views) Y axis = Volts, dBm (Spectrum Linear)
Waveform (Time Domain)	Signal Envelope I/Q Waveform I/Q Polar	Signal Envelope I/Q Waveform I/Q Polar Linear Envelope I and Q Waveform	Y axis = Volts, dBm (Linear Envelope)

Results screens for the above measurements unique to Baseband I/Q inputs are shown in the section “Baseband I/Q Measurement Result Examples” on page 168.

ManualsPlus.com

Baseband I/Q Measurement Result Examples

The following section shows examples of new measurement result displays using Baseband I/Q Inputs. A notation below each example indicates the nature of the input signal.

Channel Power Measurement

There is a new view for Channel Power measurements with Baseband I/Q Inputs: the Channel Power Spectrum view with 0 Hz center frequency.

This measurement is not available if `Input Port` menu is set to *I only* or *Q Only*, as the total I/Q channel power cannot be measured.

Figure 4-17 Basic Mode Channel Power - Baseband I/Q Inputs

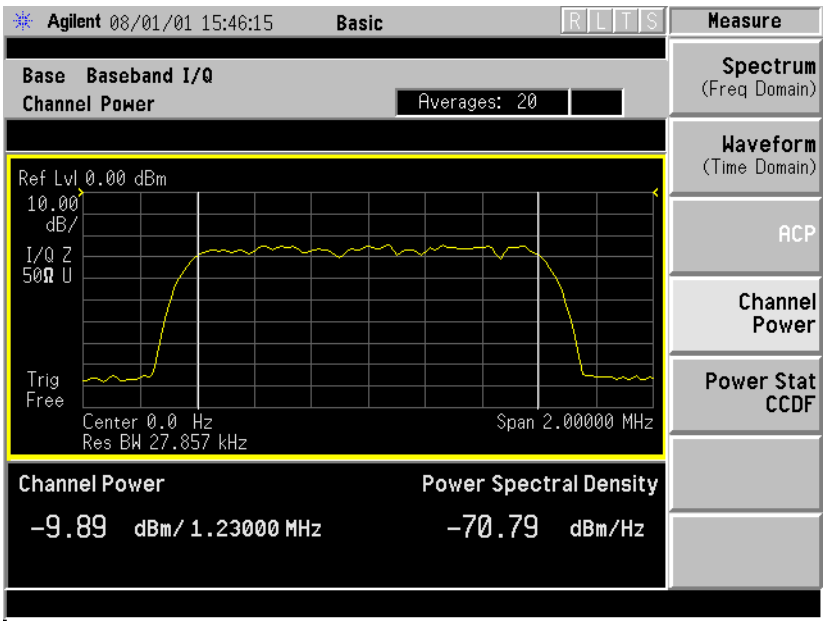

ManualsPlus.com

Spectrum (Frequency Domain) Measurement

There are two new views with Baseband I/Q input Spectrum measurements: the Spectrum view with 0 Hz center frequency, and the Spectrum Linear view with 0 Hz center frequency and the vertical scale in Volts.

If you have *I only* or *Q Only* selected as the *Input Port*, a Spectrum view does not have 0 Hz as the center frequency. It is displayed with 0 Hz at the left margin, similar to a conventional spectrum display, except that the start frequency remains 0 Hz regardless of *Span*, and the center frequency is displayed as half the *Span*.

Figure 4-18 Basic Mode Spectrum View- Baseband I/Q Inputs

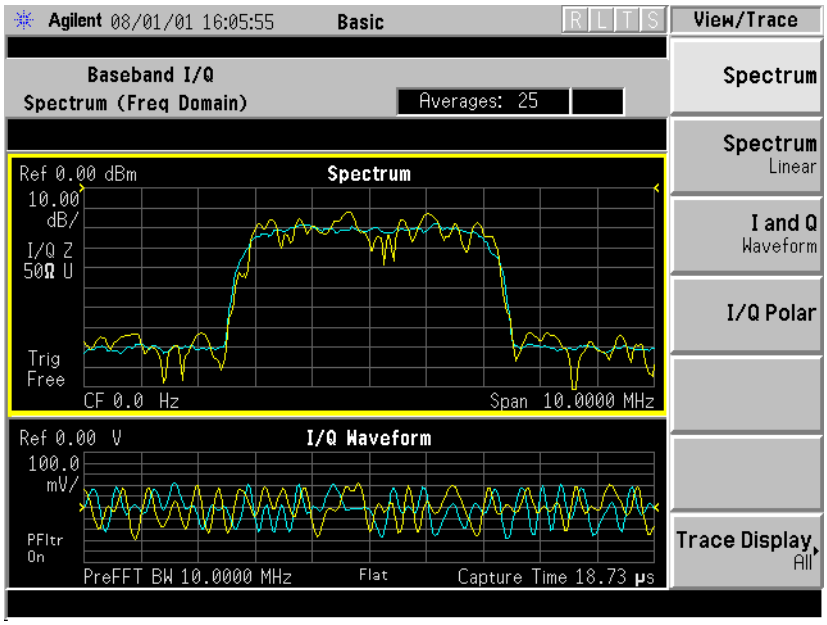

ManualsPlus.com

Figure 4-19 Basic Mode Spectrum Linear View- Baseband I/Q Inputs

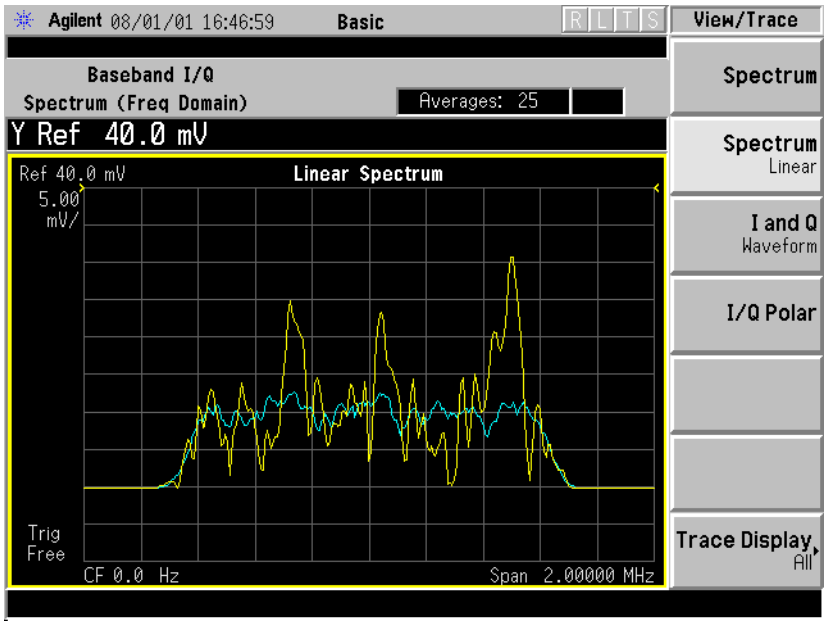

Figure 4-20 Basic Mode Spectrum I Only View- Baseband I/Q Inputs

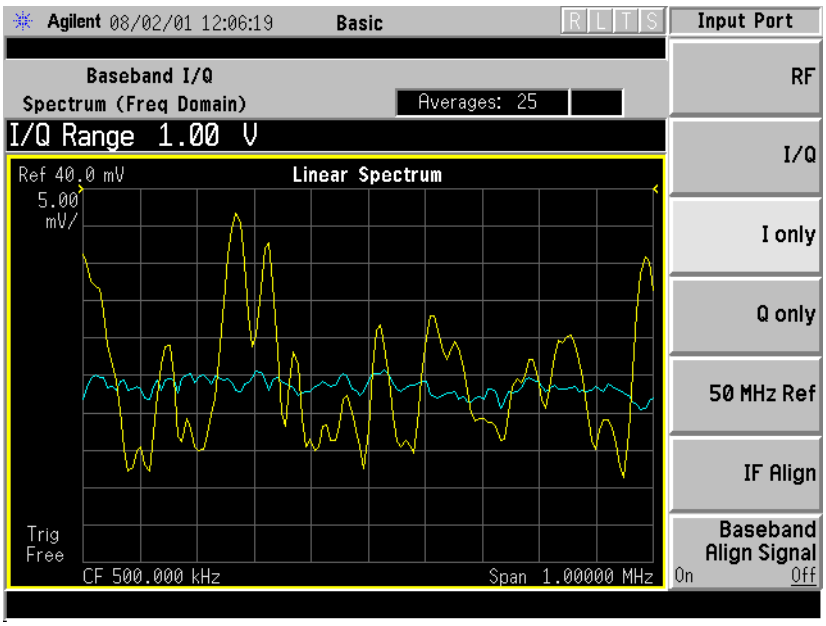

ManualsPlus.com

Waveform (Time Domain) Measurement

There are two new views with Baseband I/Q input Waveform (Time Domain) measurements: the Linear Envelope view with the vertical scale in Volts, and the I and Q Waveform view with separate windows for the I and Q traces.

Figure 4-21 Basic Mode Waveform Linear Envelope - Baseband I/Q Inputs

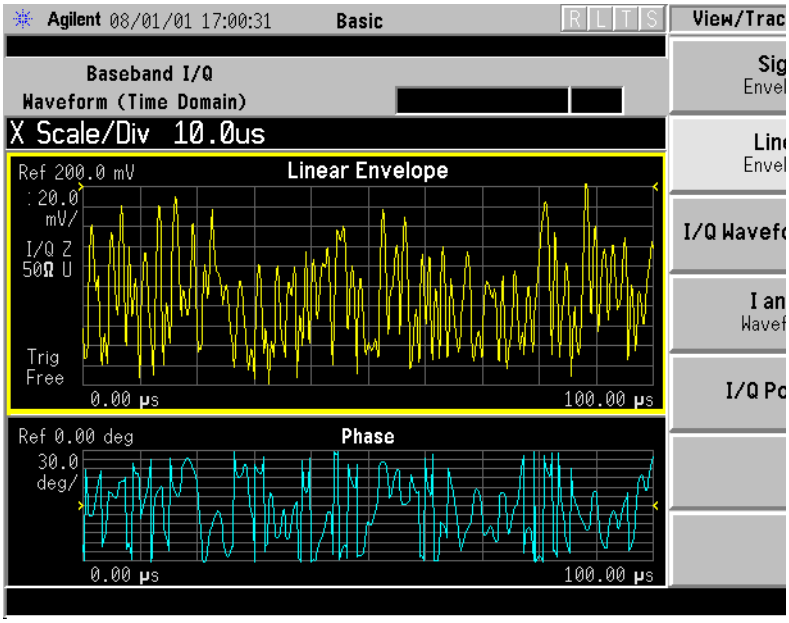

Figure 4-22 Basic Mode I and Q View Waveform View - Baseband I/Q Inputs

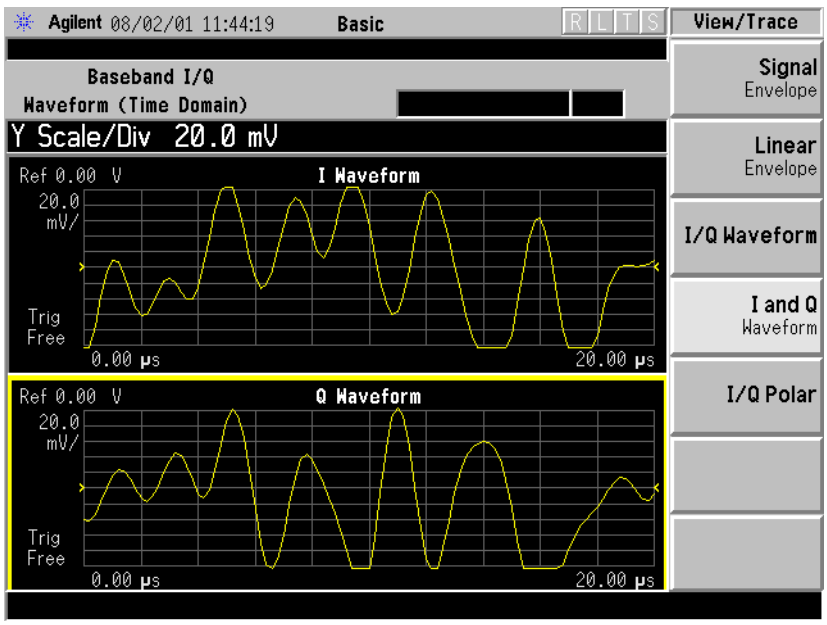

ManualsPlus.com

Baseband I/Q Key Access Locations

All Baseband I/Q input setup and operation features can be located by using the key access table below. The key access path shows the key sequence you enter to access a particular key.

Some features can only be used when specific measurements are active. If a feature is not currently valid the key label for that feature appears as lighter colored text or is not displayed at all.

Table 4-11 Baseband I/Q Key Access Locations

Key	Key Access Path
Align IQ	System/Alignments/Align Subsystem/
Baseband Align Signal	Input/Input Port
dBm	Input/I/Q Range/
dBmv	Input/I/Q Range/
dBuv	Input/I/Q Range/
I and Q Waveform	View/Trace/ (Spectrum Measurement)
I Offset	Input/I/Q Setup/
I Only	Mode Setup/Input/Input Port/
I Only	Input/Input Port/
I/Q	Input/Input Port/
I/Q	Mode Setup/Input/Input Port/
I/Q Input Z	Input/I/Q Setup/
I/Q Polar	View/Trace/
I/Q Range	Input/
I/Q Setup	Input/
I/Q Setup	Mode Setup/Input/Input Port/
I/Q Waveform	View/Trace/
I/Q Waveform	Marker/Trace/
I/Q Z Ref	Input/I/Q Setup/
I or Q Magnitude	Meas Setup/Trig Source/More (1 of 2)
I Waveform	View/Trace/ (Spectrum Measurement)
Linear Envelope	View/Trace/ (Waveform Measurement)
Q Offset	Input/I/Q Setup
Q Only	Input/Input Port/

ManualsPlus.com

Table 4-11 Baseband I/Q Key Access Locations

Key	Key Access Path
Q Only	Mode Setup/Input/Input Port/
Q Waveform	Marker/Trace/
Signal Envelope	View/Trace/ (Waveform Measurement)
Spectrum Linear	View/Trace/(Spectrum Measurement)
V (volts)	Input/I/Q Offset/I Offset (or Q Offset)/Keypad Entry
Volts	Input/I/Q Range/
Watts	Input/I/Q Range/

ManualsPlus.com

BbIQ Programming Commands

This is a summary of the SCPI commands related to the operation of Option B7C Baseband I/Q Inputs. For complete programming information refer to the Language Reference chapter in the Programmer's Guide.

CALCulate Subsystem

Baseband I/Q - Spectrum I/Q Marker Query

```
:CALCulate:SPECtrum:MARKer:IQ [1]|2|3|4?
```

Reads out current I and Q marker values.

Baseband I/Q - Waveform I/Q Marker Query

```
:CALCulate:WAVeform:MARKer:IQ [1]|2|3|4?
```

Reads out current I and Q marker values.

CALibration Subsystem

Baseband I/Q - Align the Baseband IQ

```
:CALibration:GIQ
```

```
:CALibration:GIQ?
```

Performs the IQ group of alignments. The query performs the alignment and returns a 0 if the alignment is successful.

Baseband I/Q - IQ Common Mode Response Null

```
:CALibration:IQ:CMR
```

```
:CALibration:IQ:CMR?
```

Forces a common mode response null on I/Q inputs.

Baseband I/Q - IQ Flatness Calibration

```
:CALibration:IQ:FLATness
```

```
:CALibration:IQ:FLATness?
```

Activates a flatness calibration for all I/Q ranges and impedance settings.

ManualsPlus.com

Baseband I/Q - IQ Offset Calibration

```
:CALibration:IQ:OFFSet
```

```
:CALibration:IQ:OFFSet?
```

Activates a calibration of the I/Q input offset DAC.

DISPlay Subsystem

Spectrum - Y-Axis Scale/Div

```
:DISPlay:SPECtrum[n]:WINDow[m]:TRACe:Y[:SCALe]:PDIVision
<power>
```

```
:DISPlay:SPECtrum[n]:WINDow[m]:TRACe:Y[:SCALe]:PDIVision?
```

Sets the amplitude reference level for the y-axis.

Spectrum - Y-Axis Reference Level

```
:DISPlay:SPECtrum[n]:WINDow[m]:TRACe:Y[:SCALe]:RLEVel
<power>
```

```
:DISPlay:SPECtrum[n]:WINDow[m]:TRACe:Y[:SCALe]:RLEVel?
```

Sets the amplitude reference level for the y-axis.

Waveform - Y-Axis Scale/Div

```
:DISPlay:WAVeform[n]:WINDow[m]:TRACe:Y[:SCALe]:PDIVision
<power>
```

```
:DISPlay:WAVeform[n]:WINDow[m]:TRACe:Y[:SCALe]:PDIVision?
```

Sets the scale per division for the y-axis.

Waveform - Y-Axis Reference Level

```
:DISPlay:WAVeform[n]:WINDow[m]:TRACe:Y[:SCALe]:RLEVel
<power>
```

```
:DISPlay:WAVeform[n]:WINDow[m]:TRACe:Y[:SCALe]:RLEVel?
```

Sets the amplitude reference level for the y-axis.

ManualsPlus.com

INPut Subsystem

The INPut subsystem controls the characteristics of all the instrument input ports.

Baseband I/Q - Select Input Impedance

```
:INPut:IMPedance:IQ U50|B600|U1M|B1M
```

```
:INPut:IMPedance:IQ?
```

Selects the characteristic input impedance when input port is set to I or Q. This is the impedance value as well as the unbalanced (U) or balanced (B) impedance mode.

Baseband I/Q - Select Input Impedance Reference

```
:INPut:IMPedance:REFerence <integer>
```

```
:INPut:IMPedance:REFerence?
```

Sets the value of the input impedance reference when input port is set to I or Q.

Baseband I/Q - Activate IQ Alignment

```
:INPut:IQ:ALIGn OFF|ON|0|1
```

```
:INPut:IQ:ALIGn?
```

Activates or deactivates IQ alignment.

Baseband I/Q - I Input DC Offset

```
:INPut:OFFSet:I <level>
```

```
:INPut:OFFSet:I?
```

Sets adjustment to compensate for I voltage bias on signals when the I input port is selected.

Baseband I/Q - Q Input DC Offset

```
:INPut:OFFSet:Q <level>
```

```
:INPut:OFFSet:Q?
```

Sets adjustment to compensate Q voltage bias on signals when the Q input port is selected.

ManualsPlus.com

MEASure Subsystem

Spectrum (Frequency Domain) Measurement This measures the amplitude of your input signal with respect to the frequency. It provides spectrum analysis capability using FFT (fast Fourier transform) measurement techniques. You must select the appropriate mode using INSTrument:SELect, to use these commands.

```
:CONFigure:SPECtrum
```

```
:FETCh:SPECtrum[n]?
```

```
:READ:SPECtrum[n]?
```

```
:MEASure:SPECtrum[n]?
```

Waveform (Time Domain) Measurement This measures the power in your input signal with respect to time and is equivalent to zero-span operation in a traditional spectrum analyzer. You must select the appropriate mode using INSTrument:SELect, to use these commands.

```
:CONFigure:WAVeform
```

```
:FETCh:WAVeform[n]?
```

```
:READ:WAVeform[n]?
```

```
:MEASure:WAVeform[n]?
```

ManualsPlus.com

SENSe Subsystem

Select the Input Signal

```
[:SENSe]:FEED RF|IQ|IONLy|QONLy|AREFerence|IFALign
```

```
[:SENSe]:FEED?
```

Selects the input signal. The default input signal is taken from the front panel RF input port. For calibration and testing purposes the input signal can be taken from an internal 321.4 MHz IF alignment signal or an internal 50 MHz amplitude reference source.

If the baseband IQ option (Option B7C) is installed, I and Q input ports are added to the front panel. The I and Q ports accept the in-phase and quadrature components of the IQ signal, respectively. The input signal can be taken from either or both ports.

RF selects the signal from the front panel RF INPUT port.

IQ selects the combined signals from the front panel optional I and Q input ports. (Option B7C)

IONLy selects the signal from the front panel optional I input port. (Option B7C)

QONLy selects the signal from the front panel optional Q input port. (Option B7C)

AREFerence selects the internal 50 MHz amplitude reference signal.

IFALign selects the internal, 321.4 MHz, IF alignment signal.

Baseband I/Q - Select I/Q Power Range

```
[:SENSe]:POWer:IQ:RANGe[:UPPer] <power> [DBM]|DBMV|W
```

```
[:SENSe]:POWer:IQ:RANGe[:UPPer]?
```

Selects maximum total power expected from unit under test at test port when I or Q port is selected.

Baseband I/Q - Select I/Q Voltage Range

```
[:SENSe]:VOLTage:IQ:RANGe[:UPPer] <level>
```

```
[:SENSe]:VOLTage:IQ:RANGe[:UPPer]?
```

Selects upper voltage range when I or Q port is selected. This setting helps set the gain which is generated in the variable gain block of the baseband IQ board to improve dynamic range.

ManualsPlus.com

5 If You Have a Problem

This chapter will help you identify the causes of some problems you may encounter, offers warranty information, and provides instructions for returning your instrument to Agilent Technologies.

For information about error messages and functional tests, see the *Instrument Messages and Functional Tests* document.

ManualsPlus.com

Problem Symptoms and Solutions

The following section describes some transmitter tester problem symptoms and possible solutions to those problems. They include:

"Key or Feature Does Not Appear in Menu" on page 180.

"Frequency Unlock or External Reference Missing - Error Messages" on page 181.

"LAN External Loopback Test Failed - Error Message" on page 181.

"Instrument Fails Alignment - Error Message" on page 181.

"Measurement Keys Do Not Appear after Pressing the Mode Key" on page 182.

"Instrument Power-On Problem" on page 182.

"LAN Communication Problem" on page 182.

"Instrument Keyboard is Locked" on page 182.

Key or Feature Does Not Appear in Menu

Symptom: You are unable to locate a key for a feature you want to use in a particular measurement.

Solution 1: Many features are available only for making specific measurements, and do not apply to other measurements. Verify that the feature you are seeking is available for that particular measurement by examining the key access table on page 53. Notes in the key access path column indicate whether a feature can only be used with a particular measurement. You can also review the section which documents the measurement you are using, and indicates which features apply to that measurement.

Solution 2: Some features are only available when using a specific mode. Review the section describing the mode to verify that a feature is available.

Solution 3: Some features of the transmitter tester are not yet available and will be implemented with a future firmware release. For an update on the status of firmware upgrades you can check the following URL: **www.agilent.com/find/vsa/**.

ManualsPlus.com

Frequency Unlock or External Reference Missing - Error Messages

Symptom: A frequency unlock error message, or an external reference missing error message, appears in the annunciator bar just above the data window.

Solution 1: The *red* `Ext Ref` message indicates that the external reference is not locked. The external reference can be any frequency between 1 and 30 MHz. If you have connected an external reference you must enter it's frequency into the instrument. The value you entered must correspond to the external reference that is in use, or it will generate the error. Note that the value entered for the external reference frequency will persist, even after the instrument has been powered off and then on.

A *green* `Ext Ref` message indicates that the instrument is using an external reference and it is properly locked.

Solution 2: If you want to use the internal reference signal, toggle the *Freq Ref* key to the Int (internal) setting.

LAN External Loopback Test Failed - Error Message

Symptom: During booting the instrument you see a message which reads `LAN external loopback test failed`.

Solution: This message indicates that no LAN cable is connected to the instrument. You can ignore this message if you don't want to use the LAN.

Instrument Fails Alignment - Error Message

Symptom: An error message indicates that the instrument has failed alignment. This message appears either at power on during the self-alignment, or when the *Align All Now* key is pressed.

Solution: These alignments will fail if an external 50 MHz signal, at a power level greater than 0 dB, is connected to the RF input of the transmitter tester. Remove the 50 MHz signal to fix this problem.

ManualsPlus.com

Measurement Keys Do Not Appear after Pressing the Mode Key

Symptom: After pressing the *MODE* key, you have selected a particular mode (like *Basic*, *Service*, or one of the measurement personalities), but the menu for the mode you have selected does not appear on the softkeys.

Solution: If you were already in the mode that you selected, you must press the *MEASURE* key to display the available measurements.

Instrument Power-On Problem

Symptom: The instrument will not power-on. The instrument is plugged in, but the green LED above the front panel power switch is not on. The yellow standby LED may be flashing or may be extinguished. Something appears to be causing the instrument power supply to shut down.

Solution: An external device or internal assembly is causing the instrument to shut down, or the power supply may be in thermal shutdown. Inspect the instrument to ensure that it is receiving adequate air flow. Disconnect all devices from the rear panel and remove anything connected to the front panel probe power jack. If after powering the instrument off, the instrument powers on, determine which device caused the problem.

LAN Communication Problem

Symptom: You cannot communicate with the instrument over the LAN.

Solution: Make sure the correct IP address, subnet mask, and host name are stored in the instrument. Press *System*, *Config I/O*, then read the IP address, subnet mask and host name which are shown on the corresponding softkey labels. The default subnet mask of 255.255.0.0 should be sufficient for most closed network applications. If the *Restore Sys Defaults* key has been used recently, the IP address, subnet mask, and host name will have been reset to factory defaults. (The IP address is changed to `10.10.10.10.`, the subnet mask is changed to `255.255.0.0.`, and the host name is set to `VSA`.)

Instrument Keyboard is Locked

Symptom: The keyboard is locked and does not respond to attempts to activate features.

Solution: A programmer can lock the keyboard remotely using the SCPI `KLOCk` command. You can confirm if this is the reason the keyboard is locked by examining the annunciator bar; a message saying `Klock` will appear if this command has been executed.

ManualsPlus.com

Agilent Technologies Test and Measurement Support, Services, and Assistance

Agilent Technologies aims to maximize the value you receive, while minimizing your risk and problems. We strive to ensure that you get the test and measurement capabilities you paid for and obtain the support you need. Our extensive support resources and services can help you choose the right Agilent products for your applications and apply them successfully. Every instrument and system we sell has a global warranty. Support is available for at least five years beyond the production life of the product. Two concepts underlie Agilent's overall support policy: "Our Promise" and "Your Advantage."

Our Promise

Our Promise means your Agilent test and measurement equipment will meet its advertised performance and functionality. When you are choosing new equipment, we will help you with product information, including realistic performance specifications and practical recommendations from experienced test engineers. When you use Agilent equipment, we can verify that it works properly, help with product operation, and provide basic measurement assistance for the use of specified capabilities, at no extra cost upon request. Many self-help tools are available.

Your Advantage

Your Advantage means that Agilent offers a wide range of additional expert test and measurement services, which you can purchase according to your unique technical business needs. Solve problems efficiently and gain a competitive edge by contracting with us for calibration, extra-cost upgrades, out-of-warranty repairs, and on-site education and training, as well as design, system integration, project management, and other professional engineering services. Experienced Agilent engineers and technicians worldwide can help you maximize your productivity, optimize the return on investment of your Agilent instruments and systems, and obtain dependable measurement accuracy for the life of those products.

By internet, phone, or fax, get assistance with all your test & measurement needs.

ManualsPlus.com

Table 5-1 Contacting Agilent

Online assistance: `www.agilent.com/find/assist`

United States	Japan	New Zealand	Europe
(tel) 1 800 452 4844	(tel) (+81) 426 56 7832 (fax) (+81) 426 56 7840	(tel) 0 800 738 378 (fax) (+64) 4 495 8950	(tel) (+31) 20 547 2323 (fax) (+31) 20 547 2390
Canada	**Latin America**	**Australia**	
(tel) 1 877 894 4414 (fax) (905) 282 6495	(tel) (305) 269 7500 (fax) (305) 269 7599	(tel) 1 800 629 485 (fax) (+61) 3 9210 5947	

Asia Call Center Numbers

Country	Phone Number	Fax Number
Singapore	1-800-375-8100	(65) 836-0252
Malaysia	1-800-828-848	1-800-801664
Philippines	(632) 8426802 1-800-16510170 (PLDT Subscriber Only)	(632) 8426809 1-800-16510288 (PLDT Subscriber Only)
Thailand	(088) 226-008 (outside Bangkok) (662) 661-3999 (within Bangkok)	(66) 1-661-3714
Hong Kong	800-930-871	(852) 2506 9233
Taiwan	0800-047-866	(886) 2 25456723
People's Republic of China	800-810-0189 (preferred) 10800-650-0021	10800-650-0121
India	1-600-11-2929	000-800-650-1101

Returning Your Instrument to Agilent Technologies

If you are returning your transmitter tester to Agilent Technologies for servicing, fill out and attach a blue repair tag to the instrument. Repair tags are located at the end of this chapter.

Include as much information as possible about the problem. Record any error messages that appeared on the display and include performance test results or any other specific data on the performance of the instrument.

Ship the instrument in the original factory packaging materials, if they are available. If not, use similar packaging to properly protect the instrument.

Return the instrument to the nearest Agilent Technologies sales and service office. Contact the nearest office as shown in Table 5-1 on page 184 to determine the address to which the instrument should be sent.

ManualsPlus.com

6 Options and Accessories

This chapter contains descriptions of the options and accessories that are available for use with your instrument.

ManualsPlus.com

Options and Measurement Personalities

Option BAH: GSM Measurement Personality

Provides GSM transmitter measurements:

power vs. time
phase and frequency error
output RF spectrum
transmit band spurs

And general transmitter measurements:

transmit power
spectrum (frequency domain)
waveform (time domain)

It includes the GSM Guide, which contains measurement and programming information.

Option BAC: cdmaOne Measurement Personality

Provides IS-95 transmitter measurements:

channel power
modulation accuracy (rho)
code domain power
ACPR
spur close

And general transmitter measurements:

spectrum (frequency domain)
waveform (time domain)

Includes cdmaOne Guide, which contains measurement and programming information.

Option BAE: NADC/PDC Measurement Personalities

Provides NADC transmitter measurements:

ACP
error vector magnitude

Provides PDC transmitter measurements:

ACP
error vector magnitude
occupied BW

And general transmitter measurements:

spectrum (frequency domain)

ManualsPlus.com

waveform (time domain)

It includes NADC/PDC Guide, which contains measurement and programming information.

Option HN1: iDEN Measurement Personality

Provides iDEN transmitter measurements:

ACPR
bit error rate
occupied bandwidth

And general transmitter measurements:

spectrum (frequency domain)
waveform (time domain)

It includes iDEN Measurement Guide (which contains front panel operation and programming commands).

Option BAF: W-CDMA Measurement Personality

Provides 3GPP W-CDMA transmitter measurements:

channel power
ACPR (ACLR)
intermodulation
multi carrier power
spectrum emission mask
occupied BW
code domain power
modulation accuracy (composite EVM)
QPSK EVM
power statistics CCDF

And general transmitter measurements:

spectrum (frequency domain)
waveform (time domain)

It includes W-CDMA Guide, which contains measurement and programming information.

Option B78: cdma2000 Measurement Personality

Provides cdma2000 transmitter measurements:

channel power
ACPR
intermodulation
spectrum emission mask
occupied BW
code domain power
modulation accuracy (composite rho)

ManualsPlus.com

QPSK EVM
power statistics CCDF

And general transmitter measurements:

spectrum (frequency domain)
waveform (time domain)

It includes cdma2000 Guide, which contains measurement and programming information.

Option B7C: Baseband IQ Measurement Personality

Provides the following baseband IQ measurement capability for W-CDMA and IS2000:

channel power
occupied BW
code domain analysis
modulation accuracy (composite rho)
QPSK EVM
power statistics CCDF

And general transmitter measurements:

spectrum (frequency domain)
waveform (time domain)

Differential inputs are included with this option. The input range is DC to +5 v. A +/- 2.5v variable DC offset function is available for both I and Q signals.

Option 202: EDGE (with GSM) Measurement Personality

Provides EDGE (8PSK modulation) transmitter measurements:

EVM
power vs. time
output RF spectrum
transmit band spurs

Provides GSM (GMSK modulation) transmitter measurements:

power vs. time
phase and frequency error
output RF spectrum
transmit band spurs

And general transmitter measurements:

transmit power
spectrum (frequency domain)
waveform (time domain)

It includes the EDGE (w/GSM) Guide, which contains measurement and programming information.

ManualsPlus.com

Option 300: 321.4 MHz IF Output

Adds 321.4 MHz IF Output to the rear panel.

Option 252: Retrofit EDGE to Existing GSM Measurement Personality

This option is only available as a retrofit kit (E4406AU Option 252) for instruments that are already licensed to use the GSM mode Option BAH.

Provides EDGE (8PSK modulation) transmitter measurements:

EVM
power vs. time
output RF spectrum
transmit band spurs

Provides GSM (GMSK modulation) transmitter measurements:

power vs. time
phase and frequency error
output RF spectrum
transmit band spurs

And general transmitter measurements:

transmit power
spectrum (frequency domain)
waveform (time domain)

It includes the EDGE (w/GSM) Guide, which contains measurement and programming information.

Option 0B1: Additional Copy of Manuals

Adds an additional copy of the standard manual set, which includes the User's Guide, the Programming Guide, and Specifications manuals. Current documentation is available on the VSA web page at www.agilent.com/find/vsa.

Documentation
User's Guide
Programmer's Guide
Specifications

ManualsPlus.com

Option 0BV: Component-level Service Documentation

Adds component level service documentation.

Documentation
Component Level Information

Option 0BW: Assembly-level Service Documentation

Adds assembly level service documentation. This option includes:

Documentation
Service Guide
Specifications

Option 1CM: Rack Mount Kit

Includes rack mount flanges and hardware. Used to rack mount instruments without front handles. Available as P/N 5063-9215.

Option 1CN: Handles Kit

Also available as P/N 5063-9228.

Option 1CP: Rack Mount with Handles Kit

Rack mount with handle kit. Rack mounts instrument which has front handles attached. Available as P/N 5063-9222.

Option 1CR: Rack Slide Kit

Available as P/N E4406 -60115

VSA Transmitter Tester Measurement Personalities Retrofit

Optional measurement personalities can be retrofitted. To obtain information on available personalities, updating firmware, and general product information contact the following URL:

URL to contact to obtain product update information
www.agilent.com/find/vsa/

Further information on installing optional measurement personalities can be found in “Installing Optional Measurement Personalities” on page 36.

ManualsPlus.com

Accessories

AC Probe

The HP/Agilent 85024A high frequency probe performs in-circuit measurements without adversely loading the circuit under test. The probe has an input capacitance of 0.7 pF shunted by 1 MΩ of resistance and operates over a frequency range of 300 kHz to 3 GHz. High probe sensitivity and low distortion levels allow measurements to be made while taking advantage of the full dynamic range of the instrument.

The HP/Agilent 41800A low frequency probe has a low input capacitance and a frequency range of 5 Hz to 500 MHz.

Broadband Preamplifiers and Power Amplifiers

Preamplifiers and power amplifiers can be used with your instrument to enhance measurements of very low-level signals.

- The HP/Agilent 10855A preamplifier provides a minimum of 22 dB gain from 2 MHz to 1300 MHz. (Power is supplied by the transmitter tester's probe power output.)
- The HP/Agilent 8447D preamplifier provides a minimum of 25 dB gain from 100 kHz to 1.3 GHz.
- The HP/Agilent 87405A preamplifier provides a minimum of 22 dB gain from 10 MHz to 3 GHz. (Power is supplied by the instrument probe power output.)

GPIB Cable

The HP/Agilent 10833 GPIB cables interconnect GPIB devices and are available in four different lengths. GPIB cables are used to connect printers and controllers to an instrument.

Parallel Interface Cable

The HP 92284A parallel interface cable is a 36-pin to 25-pin male-to-male 2 meter cable used to connect supported printers to an instrument.

Printer

The DeskJet personal printers provide black and white or color printing for another form of permanent records of your test results. The HP LaserJet series printers are also compatible.

ManualsPlus.com

RS-232 Cables

Model Number	Description
HP 24542G	3 meter 9-pin (f) to 25-pin (m) RS-232 cable. Can be used with HP DeskJet printers, HP LaserJet Series printers, and PCs with 25-pin (f) RS-232 connectors.
HP 24542U	3-meter 9-pin (f) to 9-pin (f) RS-232 cable for serial 9-pin PC connection to an instrument.
HP C2932A	9-pin (m) to 9-pin (f) cable for RS-232 connection. The modem cable required is HP 24542M 9-pin (f) to 25-pin (m), and the PC cable is HP 24542U.

N2714A Calibration and Adjustment Software

This software automates all the tests needed to verify instrument performance, make adjustments, and troubleshoot. The software runs on a PC platform using Windows® 95/98 or NT 4.0, and uses the Agilent Test Management Environment to help minimize calibration run time and operator involvement.

ManualsPlus.com

Index

Numerics

50 MHz Amptd key, 144
50 MHz Ref key, 83

A

AC probe, 191
Accessories, 191
accessories
  AC probe, 191
  broadband preamplifiers, 191
  cal and adj software, 192
  GPIB cable, 191
  parallel cable, 191
  parallel interface cable, 191
  printer, 191
  printers, 191
  RS-232 cable, 192
ACPR
  measurement reference type, 128
  view/trace selection, 128
active function area, 33
active license key, 38
  how to locate, 38
ADC calibration, 174
ADC Dither key
  spectrum measurement, 102
ADC Range key
  spectrum measurement, 101
ADC ranging function
  automatic control, 114
  automatic peak control, 114
  automatic peak lock, 114
  manual control, 114
address settings, 69
adjustment, 77
adjustment keys, 73
adjustment software, 192
Advanced menu
  spectrum, 100
  waveform, 114
advanced menu
  ADC dither, 115
  ADC ranging function, 114
  decimation, 115
  number of data points, 134
  pre-ADC bandpass filter, 114
  resolution bandwidth, 134
  resolution bandwidth filter, 114
  sweep time, 134
  trigger source, 134
Align 50 MHz Reference key, 78
Align ADC key, 78
Align All Now key, 77
Align Current IF Flatness key, 78
Align Current Sysgain key, 78
Align IF key, 78
Align RF key, 78
Align Subsystems key, 78
alignment commands, 174
alignment keys, 73
Alignments key, 77
Alpha Editor key, 68
amplifiers, 191
amplitude Y scale
  reference position, 135
  reference value, 135
  scale coupling, 135
  scale per division, 135
annunciator bar, 35
application modes available, 74
application notes, 17
Auto Align key, 77
Auto Trig key, trigger menu, 85
averaging
  transmit band spurs, 176, 178
Averaging menu
  Avg Mode key, 91
  Avg Number key, 91
  Avg Type key, 91

B

Band Pwr key, 96
Baseband I/Q inputs
  key access table, 172
  key entries, 172
  key path, 172
Baseband IQ measurements, 154
Basic key, 88
basic mode,selecting, 82
broadband preamplifiers, 191
bus configuration keys, 69

C

cable
  GPIB, 191
  parallel interface, 191
  RS-232, 192
cables
  RS-232, 41
cal and adj software, 192
calibration, 77
  ADC, 174
calibration commands, 174
calibration keys, 73
calibration software, 192
channel
  selecting the, 86
channel power, 131
  advanced menu, 131, 134
  amplitude Y scale
    scale/div, 135
  changing display, 135
  channel bandwidth, 131
  channel power span, 134
  integration bandwidth, 133
  power spectral density, 131
  time record length, 131
Choose Option key, 39
code updates, 38
computers
  RS-232 cables, 41
configuring I/O, 69
context dependency map
  mode, 21
context dependency maps
  front panel, 23
  measure, 22
  mode, 22
Corrections key, 79
Corrections Off error annunciator, 34
custom printer, 64

D

data entry, 27
  numeric keys, 27
Data Packing
  spectrum measurement, 102, 114
DC probes
  use of, 191
Decimation
  spectrum measurement, 102
defaults, factory presets, 82
Delay key, trigger menu, 85
deleting an application/personality, 36
Delta key, 96
DeskJet printers, 191
diagnostic commands, 174
Diagnostics key, 74
display
  spectrum window, 175
documentation
  option, 15
  transmitter tester, 15

E

editing text, 68
Error annunciator, 34
errors
  corrections off, 35
  keys, 73
  oven cold, 35
  troubleshooting front panel, 180
  unlock, 35
ESC key, 24
Ethernet Addr key, 69
ethernet key, 69

ManualsPlus.com

Index

Even Second error annunciator, 35
Exit Core Firmware key, 38
exponential averaging, 91
Ext Front key, 92
Ext Rear key, 92
external reference, 35
  using an, 71
External Reference error annunciator, 34

F

factory defaults, presetting, 82
FFT Length key, 101
FFT Size menu, 101
FFT Window key., 100
file features, 67
Firmware Revision key, 74
firmware updates, 38
floppy disk drive, 28
Frame Timer key, trigger menu, 85
Free Run key, 92
Freq Ref key, 71
frequency
  selecting the, 86
FREQUENCY/channel key, 86
front panel key menu maps, 20
front panel keys, 24
Front Panel Test, 148
Function key, 96

G

GPIB Address key, 69
GPIB cable, 191
GPIB keys, 69

H

hardware configuration keys, 73
Help key, 29
Home key, 28
Host ID key, 74
Host Name key, 69
HP 13242G Cable, 42
HP 24542G/H Cable, 42
HP 24542M Cable, 43
HP 24542U Cable, 41, 44, 45
HP 5181-6639 Adapter, 45, 46
HP 5181-6640 Adapter, 44, 45
HP 5181-6641 Adapter, 44, 45
HP 5181-6642 Adapter, 44, 46
HP 92219J Cable, 42
HP C2913A/C2914A Cable, 43
HP F1047-80002 Cable, 41, 45, 46
HP LaserJet printers, 191
HP sales and service offices, 184
HP-IB cable, 191

I

I and Q waveform view
  I or Q waveform window, 106
I or Q waveform window
  amplitude Y scale, 106
    reference position, 106
    reference value, 106
    scale coupling, 107
    scale per division, 106
  span X scale, 106
    reference position, 106, 118
    reference value, 106, 118
    scale coupling, 106, 119
    scale per division, 106, 118
I origin
  I/Q polar window, 120
I Origin key, 107
I waveform window
  amplitude Y scale, 119
    reference position, 119
    scale coupling, 119
    scale per division, 119
I/O,configuring, 69
I/Q Input Z key, 84
I/Q Polar view
  waveform measurement, 120
I/Q polar view
  I/Q polar window, 107, 120
I/Q polar window
  amplitude Y scale, 107
    I/Q scale per division, 107
    Q Origin, 107
  I origin, 120
  I/Q scale per division, 120
  Q origin, 120
  span X scale, 107
    I Origin, 107
I/Q scale per division
  I/Q polar window, 120
I/Q Scale/Div key, 107
I/Q Waveform key, 93
I/Q waveform view
  I/Q waveform window, 119
I/Q waveform window, 118, 119
  amplitude Y scale, 119
    reference position, 119
    reference value, 119
    scale coupling, 119
    scale per division, 119
IF Align Signal menu
  Signal Amptd key, 84
  Signal Rate key, 84
  Signal Type key, 84
IF Flatness
  advanced spectrum feature, 102
Input Atten key, 84
input attenuation, 84
input configuration, 176
Input menu
  50 MHz Ref key, 83
  I/Q key, 83
  Port key, 83
  RF key, 83
input port selection, 178
input/output keys, 69
inputs
  external trigger, 29
  I and Q, 29
inputs, configuration, 69
Install Now key, 39
installing measurement personalities, 36
instrument firmware updates, 38
internal reference selection, 178
IP Address key, 69
IQ port selection, 178

K

key access path, 53
key access table, 53
key entries, 53
key menu maps, 20
keyboard
  attaching external, 31
keywords for licensing, 74

L

LAN keys, 69
LAN-TP connector, 31
Length Ctrl key, 101
Length key, 101
Level key, trigger menu, 85
license keys installed, 74
Line key, 92
line power input, 31
linear enevelope window, 118, 119
linear spectrum window
  amplitude Y scale, 105
    reference position, 105
    reference value, 105
    scale coupling, 105
    scale per division, 105
  Span key, 105
Load State key, 67
loading an application/personality, 36
local
  placing instrument in, 76

M

making basic measurements, 88

ManualsPlus.com

Index

Marker key, 95
Marker menu
  Band Pwr key, 96
  Delta key, 96
  Function key, 96
  Noise key, 96
  Select key, 96
  Shape key, 96
Max Total Pwr key, 84
Meas Control key, 90
Measure softkey, 90
measurement
  channel power, 133
  power stat CCDF, 137
    display, 139
  spectrum
    display, 107
measurement bar, 34
measurement modes available, 74
measurement personalities
    retrofit, 190
measurement reference type
  spectral power density
      reference, 128
  total power reference, 128
measurements
  basic, 88
  how to make, 88
  spectrum (frequency domain), 177
  waveform (time domain), 177
menu map, 20
Min Pts in RBW key, 101
mode
  availability, 74
  basic, 88
  selecting, 82
  setup, 83
Mouse Adapter (typical), 43

N

N2714A cal and adj software, 192
Navigation keys, 28
Next Window key, 28
Noise key, 96
Normal key, 95

O

on/off switch, 29
Options
  0B1 (standard manual set), 189
  0BV (service guide), 190
  0BW (service guide and specifications), 190
  1CM (rack mount kit), 190
  1CN (handle kit), 190
  1CP (rack mount and handle kit), 190
  1CR (rack slide kit), 190
  202 (EDGE with/GSM), 188
  252 (EDGE w/GSM), 189
  B78 (cdma 2000), 187, 189
  BAC (cdmaOne), 186
  BAE (NADC/PDC), 186
  BAF (W-CDMA), 187
  BAH (GSM), 186, 189
  HN1 (iDEN), 187, 188
options
  available, 74
outputs, configuration, 69

P

parallel connector, 32
parallel interface cable, 191
pc cables for RS-232, 41
personality,selecting, 82
phase window, 118, 119
power amplifiers, 191
power stat CCDF
  combining the multiple signals, 136
  correlation between symbols on different codes, 136
  digital signal processing, 136
  display
    Gaussian line, 139
    set trace line, 139
    trace line, 139
  Gaussian distribution curve, 136
    band limited gaussian noise CCDF reference line, 136
  instantaneous envelope power, 136
  marker, 140
    delta, 140
    marker all off, 140
    normal, 140
    off, 140
    select, 140
    shape, 140
    trace, 140
  measurement bandwidth, 138
  measurement interval, 138
  modulation filtering, 136
  modulation format, 136
  number of active codes, 136
  number of sampling points, 138
  power complementary cumulative distribution function curves, 136
  probability for that particular power level, 136
Pre-ADC BPF key
  spectrum measurement, 100
preamplifiers, 191
Pre-FFT BW key, 100
Pre-FFT Fltr key, 100
preset
  factory default, 82
Preset key, 89
Print Location key, 63
Print Setup key, 63
Print Type key, 63
printer, 191
  custom, 64
Printer key, 63
printers, 191
  RS-232 cables, 41
printing, 63
probe power, 27
probes
  AC and DC, 191
problems
  error messages, 180
  feature cannot be accessed, 180
  LAN connection, 180
  power-on, 180

Q

Q origin
  I/Q Polar window, 120
  I/Q polar window, 120
Q Origin key, 107
Q waveform window
  amplitude Y scale, 119
    reference position, 119
    reference value, 119
    scale coupling, 119
    scale per division, 119

R

rear panel connection keys, 69
rear panel connections, 30
Ref Position key, 93
Ref Value key, 93
Reference key, 71
reference, selecting internal, 178
repair, returning your instrument, 184
repeat averaging, 91
Res BW key
  spectrum measurement, 100
  waveform measurement, 114
Restore Align Defaults key, 79
Restore Meas Defaults key, 90
Restore Sys Defaults key, 73
Return key, 28
returning your instrument, 184

ManualsPlus.com

Index

returning your instrument to Hewlett-Packard, 184
RF Burst key, 92
RF Envelope key, 93
RF input, 27
RF input, selection, 178
RPG knob, 27
RS-232 cable, 192
RS-232 cables, 41
RS-232 connector, 32

S

safety
  installing instrument, 47
  using instrument, 48
safety symbols, 48
sales and service offices, 184
save features, 67
Save State key, 67
Scale/Coupling key, 93
Scale/Div key, 93
SCSI connection, 31
Search key, 96
selecting a mode, 82
selecting a printer, 63
Sensors key, 146
Serial Number key, 74
Service key, 141
Service menu
  50 MHz Amptd, 141
  Front Panel Keys, 141
  Power vs Time, 141
  Sensors, 141
  Spectrum, 141
  Timebase, 141
  Waveform, 141
service mode,selecting, 82
service password, 74
setting up the mode, 83
Shape key, 96
shipment
  verification list, 15
Show Errors key, 73
Show System key, 74
SICL server keys, 69
signal envelope view
  signal envelope window, 119
signal envelope window, 118, 119
  amplitude Y scale, 119
    reference position, 119
    reference value, 119
    scale coupling, 119
    scale per division, 119
Slope key, trigger menu, 85
softkeys
  greyed-out keys, 24
  highlighted keys, 24
software, cal and adj, 192
Span key, 93
  spectrum measurement, 100
SPAN/X Scale menu, 93
spectrum
  all traces, 107
  amplitude Y scale, 105
  averaged trace, 107
  changing the display, 105
  changing views, 103
  current trace, 107
  I and Q waveform view, 106
  next window selection, 103
  span X scale, 105
  trace display, 107
  view/trace, 103
  zoom a window, 103
Spectrum (Frequency Domain) key, 97
spectrum (frequency domain) measurement, 177
spectrum linear view
  linear spectrum window, 105
spectrum measurement
  making the measurement, 97
  method, 97
  results, 98
spectrum measurement display, 175
spectrum window, 93
status keys, 73
status/info bar, 35
Sweep Time key, 93, 114
Sync Source menu, 86
system keys, 52

T

tab keys, 28
telnet key, 69
text
  how to enter, 68
Time Corr key, 79
time domain measurement, 177
Timebase Frequency key, 142
Trace Display key, 93
transmit band spurs - averaging state, 176, 178
Trig Holdout key, trigger menu, 85
Trigger key, 85
trigger out, 30
Trigger Source menu
  Ext Front key, 92
  Ext Rear key, 92
  Free Run key, 92
  Line key, 92
  RF Burst key, 92
  Video key, 92
troubleshooting key, 73

U

Uninstall Now, 39
uninstalling measurement personalities, 36
Unlock error annunciator, 34
updating firmware, 38
URL
  firmware, 17
  transmitter tester updates, 17

V

Video key, 92
view/trace
  I/Q waveforms, 104
  linear spectrum and phase graphs, 103
  spectrum graph, 103
View/Trace key, 93
view/trace selection
  I/Q polar graph view, 118
  log envelope graph view, 116
  magnitude & phase graph view, 117
Visible Align key, 79

W

waveform
  advanced menu, 114
  changing displays, 118
  changing views, 116
    view/trace selection, 116
  I/Q waveform view, 119
  log envelope, 111
  making the measurement, 110
  method, 110
  next window selection, 116
  resolution bandwidth, 114
  results, 111
  span X scale, 118
  sweep time, 114, 118
  using markers, 120
  zoom a window, 116
Waveform (Time Domain) key, 110
waveform (time domain) measurement, 177
waveform measurement
  display, 120
  I/Q Polar view, 120
website
  firmware updates, 18
  transmitter tester updates, 18
window

ManualsPlus.com

Index

I/Q waveform, 93
RF envelope, 93
spectrum, 93
Window Length key, 101

Z

zero span measurement, 177
Zoom, 28