ManualsPlus.com

Calibration Guide

Agilent Technologies ESA Spectrum Analyzers

This manual provides documentation for the following instruments:

Agilent ESA-E Series
E4402B (9 kHz - 3.0 GHz)
E4404B (9 kHz - 6.7 GHz)
E4405B (9 kHz - 13.2 GHz)
E4407B (9 kHz - 26.5 GHz)

and

Agilent ESA-L Series
E4411B (9 kHz - 1.5 GHz)
E4403B (9 kHz - 3.0 GHz)
E4408B (9 kHz - 26.5 GHz)

Agilent Technologies

Manufacturing Part Number: E4401-90493
Supersedes E4401-90475

Printed in USA
March 2005

© Copyright 2000-2005 Agilent Technologies, Inc.

ManualsPlus.com

Notice

The information contained in this document is subject to change without notice.

Agilent Technologies makes no warranty of any kind with regard to this material, including but not limited to, the implied warranties of merchantability and fitness for a particular purpose. Agilent Technologies shall not be liable for errors contained herein or for incidental or consequential damages in connection with the furnishing, performance, or use of this material.

The following safety symbols are used throughout this manual. Familiarize yourself with the symbols and their meaning before operating this instrument.

WARNING ***Warning* denotes a hazard. It calls attention to a procedure which, if not correctly performed or adhered to, could result in injury or loss of life. Do not proceed beyond a warning note until the indicated conditions are fully understood and met.**

CAUTION *Caution* denotes a hazard. It calls attention to a procedure that, if not correctly performed or adhered to, could result in damage to or destruction of the instrument. Do not proceed beyond a caution sign until the indicated conditions are fully understood and met.

WARNING **This is a Safety Class 1 Product (provided with a protective earthing ground incorporated in the power cord. The mains plug shall only be inserted in a socket outlet provided with a protective earth contact. Any interruption of the protective conductor inside or outside of the product is likely to make the product dangerous. Intentional interruption is prohibited.**

WARNING **If this product is not used as specified, the protection provided by the equipment could be impaired. This product must be used in a normal condition (in which all means for protection are intact) only.**

CAUTION Always use the three-prong ac power cord supplied with this product. Failure to ensure adequate earth grounding by not using this cord may cause product damage.

CAUTION This instrument has autoranging line voltage input, be sure the supply voltage is within the specified range.

ManualsPlus.com

Where to Find the Latest Information

Documentation is updated periodically. For the latest information about Agilent ESA Spectrum Analyzers, including firmware upgrades and application information, please visit the following Internet URL:

http://www.agilent.com/find/esa.

ManualsPlus.com

ManualsPlus.com

1. Calibrating
Calibration Cycle 11
Before You Start 24

2. Performance Verification Tests
Tests included in this section: 34
1. 10 MHz Reference Output Accuracy 42
2. 10 MHz High-Stability Frequency Reference Output Accuracy: Agilent E4401B, E4402B, E4404B, E4405B, and E4407B (Option 1D5) 45
3. Frequency Readout and Marker Frequency Count Accuracy: Agilent E4401B, E4402B, E4403B, and E4411B 48
4. Frequency Readout and Marker Frequency Count Accuracy: Agilent E4404B, E4405B, E4407B, and E4408B 51
5. Frequency Span Accuracy: Agilent E4401B and E4411B 55
6. Frequency Span Accuracy: Agilent E4402B, E4403B, E4404B, E4405B, E4407B, and E4408B 59
7. Noise Sidebands 63
8. Noise Sidebands - Wide Offsets: Agilent E4402B, E4404B, E4405B and E4407B 70
9. System-Related Sidebands 75
10. Residual FM 78
11. Sweep Time Accuracy 83
12. Display Scale Fidelity 86
13. Input Attenuation Switching Uncertainty 100
14. Reference Level Accuracy: Agilent E4401B and E4411B 107
15. Reference Level Accuracy: Agilent E4402B, E4403B, E4404B, E4405B, E4407B, and E4408B. 117
16. Resolution Bandwidth Switching Uncertainty 125
17. Absolute Amplitude Accuracy (Reference Settings): Agilent E4401B and E4411B . . 129
18. Absolute Amplitude Accuracy (Reference Settings): Agilent E4402B, E4403B, E4404B,

ManualsPlus.com

E4405B, E4407B, and E4408B 136
19. Overall Absolute Amplitude Accuracy: Agilent E4401B and E4411B 143
20. Overall Absolute Amplitude Accuracy: Agilent E4402B, E4403B, E4404B, E4405B, E4407B, and E4408B 150
21. Resolution Bandwidth Accuracy 157
22. Frequency Response: Agilent E4401B and E4411B 162
23. Frequency Response, Agilent E4402B and E4403B 172
24. Frequency Response, Agilent E4404B, E4405B, E4407B, and E4408B 187
25. Frequency Response (Preamp On): Agilent E4401B 213
26. Frequency Response (Preamp On): Agilent E4402B 221
27. Frequency Response (Preamp On): Agilent E4404B, E4405B, and E4407B 231
28. Other Input-Related Spurious Responses: Agilent E4401B and E4411B 244
29. Other Input-Related Spurious Responses: Agilent E4402B, E4403B, E4404B, E4405B, E4407B, and E4408B 249
30. Spurious Responses: Agilent E4401B and E4411B 255
31. Spurious Responses: Agilent E4402B and E4403B 263
32. Spurious Responses: Agilent E4404B, E4405B, E4407B, and E4408B 273
33. Gain Compression: Agilent E4401B, E4402B, E4403B, and E4411B 290
34. Gain Compression: Agilent E4404B, E4405B, E4407B, and E4408B 294
35. Displayed Average Noise Level: Agilent E4401B and E4411B 299
36. Displayed Average Noise Level: Agilent E4402B and E4403B 309
37. Displayed Average Noise Level: Agilent E4404B and E4405B 316
38. Displayed Average Noise Level: Agilent E4407B and E4408B 323
39. Residual Responses 330
40. Fast Time Domain Amplitude Accuracy: Agilent E4401B, E4402B, E4404B, E4405B, and E4407B (Option AYX) 333
41. Tracking Generator Absolute Amplitude and Vernier Accuracy: Agilent E4401B and E4411B (Option 1DN or 1DQ) 335

ManualsPlus.com

42. Tracking Generator Absolute Amplitude and Vernier Accuracy: Agilent E4402B, E4403B, E4404B, E4405B, E4407B, and E4408B (Option 1DN) 340
43. Tracking Generator Level Flatness: Agilent E4401B and E4411B (Option 1DN or 1DQ) 343
44. Tracking Generator Level Flatness: Agilent E4402B, E4403B, E4404B, E4405B, E4407B, and E4408B (Option 1DN) 350
45. Tracking Generator Harmonic Spurious Outputs: Agilent E4401B and E4411B (Option 1DN or 1DQ) 356
46. Tracking Generator Harmonic Spurious Outputs: Agilent E4402B, E4403B, E4404B, E4405B, E4407B, and E4408B (Option 1DN) 360
47. Tracking Generator Non-Harmonic Spurious Outputs: Agilent E4401B and E4411B (Option 1DN or 1DQ) 364
48. Tracking Generator Non-Harmonic Spurious Outputs: Agilent E4402B, E4403B, E4404B, E4405B, E4407B, and E4408B (Option 1DN) 370
49. Tracking Generator LO Feedthrough: Agilent E4402B, E4403B, E4404B, E4405B, E4407B, and E4408B(Option 1DN) 376
50. Gate Delay Accuracy and Gate Length Accuracy: Agilent E4401B, E4402B, E4404B, E4405B, and E4407B (Option 1D6) 379
51. Gate Mode Additional Amplitude Error: Agilent E4401B, E4402B, E4404B, E4405B, and E4407B (Option 1D6) 384
52. First LO OUTPUT Power Accuracy (Option AYZ only) 387
53. IF INPUT Accuracy (Option AYZ only) 390
54. Comms Frequency Response (Option BAC or BAH) 394
58. GSM Phase and Frequency Error (Options BAH and B7E) 406
59. Comms Absolute Power Accuracy (Options BAC or BAH) 409

3. Performance Verification Test Records

Agilent E4401B Performance Verification Test Record 428
Agilent E4402B Performance Verification Test Record 450

ManualsPlus.com

Agilent E4403B Performance Verification Test Record 479
Agilent E4404B Performance Verification Test Record 495
Agilent E4405B Performance Verification Test Record 525
Agilent E4407B Performance Verification Test Record 557
Agilent E4408B Performance Verification Test Record 596
Agilent E4411B Performance Verification Test Record 617

4. If You Have a Problem
What You'll Find in This Chapter 636
Before You Call Agilent Technologies 637
How to Return Your Analyzer for Service 640

ManualsPlus.com

1 Calibrating

ManualsPlus.com

Calibration verifies that the analyzer performance is within all specifications. It is time consuming and requires extensive test equipment. Calibration consists of *all* the performance tests. For a complete listing of the performance tests, see the performance verification tests table for your specific analyzer.

Allow the analyzer to warm up in accordance with the temperature stability specifications before performing the tests in this chapter.

None of these test procedures involve removing the cover of the analyzer.

ManualsPlus.com

Calibration Cycle

The performance tests in chapter 2 should be used to check the analyzer against its specifications once every year. Specifications are listed in the *Specifications Guide*.

Performance Verification Test Tables

The tables on the following pages list the performance tests in Chapter 2 , "Performance Verification Tests," required for each model number. Perform all the tests marked with a dot in the "Std" (standard) column. If any options are installed in the analyzer, also perform all tests marked with a dot in the appropriate option column.

ManualsPlus.com

Table 1-1 Agilent E4401B Performance Verification Tests

Performance Test Name		Calibration for Instrument Option:						
		Std[a]	1DN	1DQ	1DS	1D5	1D6	AYX
1.	10 MHz Reference Output Accuracy[b]	•						
2.	10 MHz High-Stability Frequency Reference Output Accuracy					•		
3.	Frequency Readout and Marker Frequency Count Accuracy	•						
5.	Frequency Span Accuracy	•						
7.	Noise Sidebands	•						
9.	System-Related Sidebands	•						
10.	Residual FM	•						
11.	Sweep Time Accuracy	•						
12.	Display Scale Fidelity	•						
13.	Input Attenuation Switching Uncertainty	•						
14.	Reference Level Accuracy	•						
16.	Resolution Bandwidth Switching Uncertainty	•						
17.	Absolute Amplitude Accuracy (Reference Settings)	•						
19.	Overall Absolute Amplitude Accuracy	•						
21.	Resolution Bandwidth Accuracy	•						
22.	Frequency Response	•						
25.	Frequency Response (Preamp On)				•			
28.	Other Input-Related Spurious Responses	•						
30.	Spurious Responses	•						
33.	Gain Compression	•						
35.	Displayed Average Noise Level	•						
39.	Residual Responses	•						
40.	Fast Time Domain Amplitude Accuracy							•
41.	Tracking Generator Absolute Amplitude and Vernier Accuracy		•	•				
43.	Tracking Generator Level Flatness		•	•				
45.	Tracking Generator Harmonic Spurious Outputs		•	•				
47.	Tracking Generator Non-Harmonic Spurious Outputs		•	•				
50.	Gate Delay Accuracy and Gate Length Accuracy						•	
51.	Gate Mode Additional Amplitude Error						•	

a. Perform these tests for all E4401B analyzers.
b. Perform this test only on analyzers not equipped with Option 1D5.

ManualsPlus.com

Table 1-2 Agilent E4402B Performance Verification Tests

Performance Test Name		Calibration for Instrument Option:								
		Std[a]	1DN	1DS	1D5	1D6	AYX	BAC	BAH	B7E
1.	10 MHz Reference Output Accuracy[b]	•								
2.	10 MHz High-Stability Frequency Reference Output Accuracy				•					
3.	Frequency Readout and Marker Frequency Count Accuracy	•								
6.	Frequency Span Accuracy	•								
7.	Noise Sidebands	•								
8.	Noise Sidebands - Wide Offsets	•								
9.	System-Related Sidebands	•								
10.	Residual FM	•								
11.	Sweep Time Accuracy	•								
12.	Display Scale Fidelity	•								
13.	Input Attenuation Switching Uncertainty	•								
15.	Reference Level Accuracy	•								
16.	Resolution Bandwidth Switching Uncertainty	•								
18.	Absolute Amplitude Accuracy (Reference Settings)	•								
20.	Overall Absolute Amplitude Accuracy	•								
21.	Resolution Bandwidth Accuracy	•								
23.	Frequency Response	•								
26.	Frequency Response (Preamp On)			•						
29.	Other Input-Related Spurious Responses	•								
31.	Spurious Responses	•								
33.	Gain Compression	•								
36.	Displayed Average Noise Level	•								
39.	Residual Responses	•								
40.	Fast Time Domain Amplitude Accuracy						•			
42.	Tracking Generator Absolute Amplitude and Vernier Accuracy		•							
44.	Tracking Generator Level Flatness		•							
46.	Tracking Generator Harmonic Spurious Outputs		•							
48.	Tracking Generator Non-Harmonic Spurious Outputs		•							
49.	Tracking Generator L.O. Feedthrough		•							
50.	Gate Delay Accuracy and Gate Length Accuracy					•				
51.	Gate Mode Additional Amplitude Error					•				
54.	Comms Frequency Response							•	•	
55.	*(This test has been deleted.)*									

ManualsPlus.com

Table 1-2 Agilent E4402B Performance Verification Tests

Performance Test Name		Calibration for Instrument Option:								
		Std[a]	1DN	1DS	1D5	1D6	AYX	BAC	BAH	B7E
56.	*(This test has been deleted.)*									
57.	*(This test has been deleted.)*									
58.	GSM Phase and Frequency Error[c]									•
59.	Comms Absolute Power Accuracy (Options BAC or BAH)							•	•	

a. Perform these tests for all E4402B analyzers.
b. Perform this test only on analyzers not equipped with Option 1D5.
c. Perform this test only on instruments having Option BAH, GSM Measurement Personality.

ManualsPlus.com

Table 1-3 Agilent E4403B Performance Verification Tests

Performance Test Name		Calibration for Instrument Option:	
		Std[a]	1DN
1.	10 MHz Reference Output Accuracy	•	
3.	Frequency Readout and Marker Frequency Count Accuracy	•	
6.	Frequency Span Accuracy	•	
7.	Noise Sidebands	•	
9.	System-Related Sidebands	•	
10.	Residual FM	•	
11.	Sweep Time Accuracy	•	
12.	Display Scale Fidelity	•	
13.	Input Attenuation Switching Uncertainty	•	
15.	Reference Level Accuracy	•	
16.	Resolution Bandwidth Switching Uncertainty	•	
18.	Absolute Amplitude Accuracy (Reference Settings)	•	
20.	Overall Absolute Amplitude Accuracy	•	
21.	Resolution Bandwidth Accuracy	•	
23.	Frequency Response	•	
29.	Other Input-Related Spurious Responses	•	
31.	Spurious Responses	•	
33.	Gain Compression	•	
36.	Displayed Average Noise Level	•	
39.	Residual Responses	•	
42.	Tracking Generator Absolute Amplitude and Vernier Accuracy		•
44.	Tracking Generator Level Flatness		•
46.	Tracking Generator Harmonic Spurious Outputs		•
48.	Tracking Generator Non-Harmonic Spurious Outputs		•
49.	Tracking Generator L.O. Feedthrough		•

a. Perform these tests on all E4403B analyzers.

ManualsPlus.com

Table 1-4 Agilent E4404B Performance Verification Tests

	Performance Test Name	Calibration for Instrument Option:								
		Std[a]	1DN	1DS	1D5	1D6	AYX	BAC	BAH	B7E
1.	10 MHz Reference Output Accuracy[b]	•								
2.	10 MHz High-Stability Frequency Reference Output Accuracy				•					
4.	Frequency Readout and Marker Frequency Count Accuracy	•								
6.	Frequency Span Accuracy	•								
7.	Noise Sidebands	•								
8.	Noise Sidebands - Wide Offsets	•								
9.	System-Related Sidebands	•								
10.	Residual FM	•								
11.	Sweep Time Accuracy	•								
12.	Display Scale Fidelity	•								
13.	Input Attenuation Switching Uncertainty	•								
15.	Reference Level Accuracy	•								
16.	Resolution Bandwidth Switching Uncertainty	•								
18.	Absolute Amplitude Accuracy (Reference Settings)	•								
20.	Overall Absolute Amplitude Accuracy	•								
21.	Resolution Bandwidth Accuracy	•								
24.	Frequency Response	•								
27.	Frequency Response (Preamp On)			•						
29.	Other Input-Related Spurious Responses	•								
32.	Spurious Responses	•								
34.	Gain Compression	•								
37.	Displayed Average Noise Level	•								
39.	Residual Responses	•								
40.	Fast Time Domain Amplitude Accuracy						•			
42.	Tracking Generator Absolute Amplitude and Vernier Accuracy		•							
44.	Tracking Generator Level Flatness		•							
46.	Tracking Generator Harmonic Spurious Outputs		•							
48.	Tracking Generator Non-Harmonic Spurious Outputs		•							
49.	Tracking Generator L.O. Feedthrough		•							
50.	Gate Delay Accuracy and Gate Length Accuracy					•				
51.	Gate Mode Additional Amplitude Error					•				
54.	Comms Frequency Response							•	•	
55.	*(This test has been deleted.)*									

ManualsPlus.com

Table 1-4 Agilent E4404B Performance Verification Tests

Performance Test Name		Calibration for Instrument Option:								
		Std[a]	1DN	1DS	1D5	1D6	AYX	BAC	BAH	B7E
56.	*(This test has been deleted.)*									
57.	*(This test has been deleted.)*									
58.	GSM Phase and Frequency Error[c]									•
59.	Comms Absolute Power Accuracy (Options BAC or BAH)							•	•	

a. Perform these tests on all Agilent E4404B analyzers.
b. Perform this test only on analyzers not equipped with Option 1D5.
c. Perform this test only on instruments having Option BAH, GSM Measurement Personality.

ManualsPlus.com

Table 1-5 Agilent E4405B Performance Verification Tests

	Performance Test Name	Calibration for Instrument Option:								
		Std[a]	1DN	1DS	1D5	1D6	AYX	BAC	BAH	B7E
1.	10 MHz Reference Output Accuracy[b]	•								
2.	10 MHz High-Stability Frequency Reference Output Accuracy				•					
4.	Frequency Readout and Marker Frequency Count Accuracy	•								
6.	Frequency Span Accuracy	•								
7.	Noise Sidebands	•								
8.	Noise Sidebands - Wide Offsets	•								
9.	System-Related Sidebands	•								
10.	Residual FM	•								
11.	Sweep Time Accuracy	•								
12.	Display Scale Fidelity	•								
13.	Input Attenuation Switching Uncertainty	•								
15.	Reference Level Accuracy	•								
16.	Resolution Bandwidth Switching Uncertainty	•								
18.	Absolute Amplitude Accuracy (Reference Settings)	•								
20.	Overall Absolute Amplitude Accuracy	•								
21.	Resolution Bandwidth Accuracy	•								
24.	Frequency Response	•								
27.	Frequency Response (Preamp On)			•						
29.	Other Input-Related Spurious Responses	•								
32.	Spurious Responses	•								
34.	Gain Compression	•								
37.	Displayed Average Noise Level	•								
39.	Residual Responses	•								
40.	Fast Time Domain Amplitude Accuracy						•			
42.	Tracking Generator Absolute Amplitude and Vernier Accuracy		•							
44.	Tracking Generator Level Flatness		•							
46.	Tracking Generator Harmonic Spurious Outputs		•							
48.	Tracking Generator Non-Harmonic Spurious Outputs		•							
49.	Tracking Generator L.O. Feedthrough		•							
50.	Gate Delay Accuracy and Gate Length Accuracy					•				
51.	Gate Mode Additional Amplitude Error					•				
54.	Comms Frequency Response							•	•	
55.	*(This test has been deleted.)*									

ManualsPlus.com

Table 1-5 Agilent E4405B Performance Verification Tests

Performance Test Name		Calibration for Instrument Option:								
		Std[a]	1DN	1DS	1D5	1D6	AYX	BAC	BAH	B7E
56.	*(This test has been deleted.)*									
57.	*(This test has been deleted.)*									
58.	GSM Phase and Frequency Error[c]									•
59.	Comms Absolute Power Accuracy (Options BAC or BAH)							•	•	

a. Perform these tests on all E4405B analyzers.
b. Perform this test only if the analyzer is not equipped with Option 1D5.
c. Perform this test only on instruments having Option BAH, GSM Measurement Personality.

ManualsPlus.com

Table 1-6 Agilent E4407B Performance Verification Tests

Performance Test Name		Calibration for Instrument Option:									
		Std[a]	1DN	1DS	1D5	1D6	AYX	AYZ	BAC	BAH	B7E
1.	10 MHz Reference Output Accuracy[b]	•									
2.	10 MHz High-Stability Frequency Reference Output Accuracy				•						
4.	Frequency Readout and Marker Frequency Count Accuracy	•									
6.	Frequency Span Accuracy	•									
7.	Noise Sidebands	•									
8.	Noise Sidebands - Wide Offsets	•									
9.	System-Related Sidebands	•									
10.	Residual FM	•									
11.	Sweep Time Accuracy	•									
12.	Display Scale Fidelity	•									
13.	Input Attenuation Switching Uncertainty	•									
15.	Reference Level Accuracy	•									
16.	Resolution Bandwidth Switching Uncertainty	•									
18.	Absolute Amplitude Accuracy (Reference Settings)	•									
20.	Overall Absolute Amplitude Accuracy	•									
21.	Resolution Bandwidth Accuracy	•									
24.	Frequency Response	•									
27.	Frequency Response (Preamp On)			•							
29.	Other Input-Related Spurious Responses	•									
32.	Spurious Responses	•									
34.	Gain Compression	•									
38.	Displayed Average Noise Level	•									
39.	Residual Responses	•									
40.	Fast Time Domain Amplitude Accuracy						•				
42.	Tracking Generator Absolute Amplitude and Vernier Accuracy		•								
44.	Tracking Generator Level Flatness		•								
46.	Tracking Generator Harmonic Spurious Outputs		•								
48.	Tracking Generator Non-Harmonic Spurious Outputs		•								
49.	Tracking Generator L.O. Feedthrough		•								
50.	Gate Delay Accuracy and Gate Length Accuracy					•					
51.	Gate Mode Additional Amplitude Error					•					

ManualsPlus.com

Table 1-6 Agilent E4407B Performance Verification Tests

Performance Test Name		Calibration for Instrument Option:									
		Std[a]	1DN	1DS	1D5	1D6	AYX	AYZ	BAC	BAH	B7E
52.	First LO OUTPUT Power Accuracy							•			
53.	IF Input Accuracy							•			
54.	Comms Frequency Response								•	•	
55.	*(This test has been deleted.)*										
56.	*(This test has been deleted.)*										
57.	*(This test has been deleted.)*										
58.	GSM - Phase and Frequency Error[c]										•
59.	Comms Absolute Power Accuracy (Options BAC or BAH)								•	•	

a. Perform these tests on all E4407B analyzers.
b. Perform this test only on analyzers not equipped with Option 1D5.
c. Perform this test only on instruments having Option BAH, GSM Measurement Personality.

ManualsPlus.com

Table 1-7 Agilent E4408B Performance Verification Tests

Performance Test Name		Calibration for Instrument Option:	
		Std[a]	1DN
1.	10 MHz Reference Output Accuracy	•	
4.	Frequency Readout and Marker Frequency Count Accuracy	•	
6.	Frequency Span Accuracy	•	
7.	Noise Sidebands	•	
9.	System-Related Sidebands	•	
10.	Residual FM	•	
11.	Sweep Time Accuracy	•	
12.	Display Scale Fidelity	•	
13.	Input Attenuation Switching Uncertainty	•	
15.	Reference Level Accuracy	•	
16.	Resolution Bandwidth Switching Uncertainty	•	
18.	Absolute Amplitude Accuracy (Reference Settings)	•	
20.	Overall Absolute Amplitude Accuracy	•	
21.	Resolution Bandwidth Accuracy	•	
24.	Frequency Response	•	
29.	Other Input-Related Spurious Responses	•	
32.	Spurious Responses	•	
34.	Gain Compression	•	
38.	Displayed Average Noise Level	•	
39.	Residual Responses	•	
42.	Tracking Generator Absolute Amplitude and Vernier Accuracy		•
44.	Tracking Generator Level Flatness		•
46.	Tracking Generator Harmonic Spurious Outputs		•
48.	Tracking Generator Non-Harmonic Spurious Outputs		•
49.	Tracking Generator L.O. Feedthrough		•

a. Perform these tests on all E4408B analyzers.

ManualsPlus.com

Table 1-8 Agilent E4411B Performance Verification Tests

Performance Test Name		Calibration for Instrument Option:		
		Std[a]	1DN	1DQ
1.	10 MHz Reference Output Accuracy	•		
3.	Frequency Readout and Marker Frequency Count Accuracy	•		
5.	Frequency Span Accuracy	•		
7.	Noise Sidebands	•		
9.	System-Related Sidebands	•		
10.	Residual FM	•		
11.	Sweep Time Accuracy	•		
12.	Display Scale Fidelity	•		
13.	Input Attenuation Switching Uncertainty	•		
14.	Reference Level Accuracy	•		
16.	Resolution Bandwidth Switching Uncertainty	•		
17.	Absolute Amplitude Accuracy (Reference Settings)	•		
19.	Overall Absolute Amplitude Accuracy	•		
21.	Resolution Bandwidth Accuracy	•		
22.	Frequency Response	•		
28.	Other Input-Related Spurious Responses	•		
30.	Spurious Responses	•		
33.	Gain Compression	•		
35.	Displayed Average Noise Level	•		
39.	Residual Responses	•		
41.	Tracking Generator Absolute Amplitude and Vernier Accuracy		•	•
43.	Tracking Generator Level Flatness		•	•
45.	Tracking Generator Harmonic Spurious Outputs		•	•
47.	Tracking Generator Non-Harmonic Spurious Outputs		•	•

a. Perform these tests on all E4411B analyzers.

ManualsPlus.com

Before You Start

This brief procedure should be performed before starting the performance verification tests:

1. Switch the analyzer on and let it warm up for five minutes.
2. If the analyzer is an Agilent E4402B, E4403B, E4404B, E4405B, E4407B, or E4408B, connect a cable from AMPTD REF OUT to the 50 Ω Input.
3. Press **System**, **Alignments**, **Align Now**, **All**, and wait for the auto alignments to finish.
4. Read the remainder of this section before you start any of the tests, and make a copy of the Performance Verification Test Record described below in "Recording the test results."

Recording the test results

Performance verification test records, for each analyzer, are provided in the chapter following the tests.

Each test result is identified as a *TR Entry* in the performance tests and on the performance verification test record. We recommend that you make a copy of the performance verification test record, record the test results on the copy, and keep the copy for your calibration test record. This record could prove valuable in tracking gradual changes in test results over long periods of time.

Performing Self-Alignment

Perform a complete self-alignment at least once per day, or if the analyzer fails a verification test. To perform a self-alignment, press **System**, **Alignment**, **Align Now**, **All**. The instrument must be up to operating temperature in order for this test to be valid. If the analyzer continuously fails one or more specifications, complete any remaining tests and record all test results on a copy of the test record. Then refer to Chapter 4 , “If You Have a Problem,” for instructions on how to solve the problem.

ManualsPlus.com

Periodic verification of operation

The analyzer requires periodic verification of operation. Under most conditions of use, you should test the analyzer at least once a year with the complete set of performance verification tests.

Test equipment you will need

The following tables list the recommended test equipment for the performance tests. The tables also list recommended equipment for the analyzer adjustment procedures which are located in the *Agilent ESA Spectrum Analyzers Service Guide*. Any equipment that meets the critical specifications given in the table can be substituted for the recommended model.

Table 1-9 Recommended Test Equipment

Equipment	Critical Specifications for Equipment Substitution	Recommended HP/Agilent Model	Use [a]
Digital Multimeter	Input Resistance ≥10 megohms Accuracy: ±10 mV on 100 V range	3458A	P,A,T
DVM Test Leads	For use with HP/Agilent 3458A Digital Multimeter	34118B	T
Universal Counter	Frequency Range: 10 MHz ±100 Hz Time Interval Range: 25 ms to 100 ms Single Trigger Operation Range: 2.5 Vdc to –2.5 Vdc External Reference Input Gate Time: ≥10 seconds Frequency Resolution: 0.01 Hz	53132A	P,A,T
Frequency Standard	Frequency: 10 MHz Timebase Accuracy (Aging): $<1\times10^{-9}$/day	5071A	P,A

ManualsPlus.com

Table 1-9 Recommended Test Equipment

Equipment	Critical Specifications for Equipment Substitution	Recommended HP/Agilent Model	Use [a]
Oscilloscope	Bandwidth: dc to 100 MHz Vertical Scale Factor of 0.5 V to 5 V/Div Two channels Minimum Timebase Setting: <100 ns Digitizing display with pulse width and time interval measurement functions Delta –T measurement accuracy in 200 ns / div: <450 ps	54820A	T
Power Meter	Compatible with HP/Agilent 8480 series power sensors. dB relative mode. Resolution: 0.01 dB Reference Accuracy: ±1.2%	E4419B	P,A,T
RF Power Sensor (2 required)	Frequency Range: 100 kHz to 3 GHz Maximum SWR: 1.60 (100 kHz to 300 kHz) 1.20 (300 kHz to 1 MHz) 1.1 (1 MHz to 2.0 GHz) 1.18 (2.0 GHz to 3.0 GHz) Amplitude range: –25 dBm to 10 dBm	8482A	P,A,T
Microwave Power Sensor	Frequency Range: 50 MHz to 26.5 GHz Maximum SWR: 1.15 (50 MHz to 100 MHz) 1.10 (100 MHz to 2 GHz) 1.15 (2 GHz to 12.4 GHz) 1.20 (12.4 GHz to 18 GHz) 1.25 (18 GHz to 26.5 GHz) Amplitude range: –25 dBm to 0 dBm	8485A	P,A,T
Power Sensor, Low Power	Frequency Range: 50 MHz to 3.0 GHz Amplitude Range: –20 dBm to –70 dBm Maximum SWR: 1.4 (10 MHz to 30 MHz) 1.15 (30 MHz to 3.0 GHz)	8481D	P,A,T
Synthesized Signal Generator	Frequency Range: 100 kHz to 1500 MHz Amplitude Range: –35 to 16 dBm SSB Noise: <–120 dBc/Hz at 20 kHz offset	8663A	P,A

ManualsPlus.com

Table 1-9 Recommended Test Equipment

Equipment	Critical Specifications for Equipment Substitution	Recommended HP/Agilent Model	Use [a]
Wide Offset Phase Noise Signal Generator	Frequency Range: 1 GHz ±1 MHz Amplitude Range: 0 dBM ±5 dB Phase Noise: <–131 dBc/Hz typical @ 100 kHz offset <–145 dBc/Hz typical @ 1 MHz offset <–147 dBc/Hz typical @ 5 MHz offset <–149 dBc/Hz typical @ 10 MHz offset	8665B	P
Signal Generator (Option BAH)	Frequency Range: 900 MHz to 1800 MHz Amplitude Range: –30 to 0 dBm Phase Error: <0.5° Frequency Error: <2.5 Hz	E4433B Option UN8, 1E5	P
Spectrum Analyzer, Microwave	Frequency Range: 100 kHz to 7 GHz Relative Amplitude Accuracy: 100 kHz to 3.0 GHz: <±1.8 dB Frequency Accuracy: <±10 kHz at 7 GHz	8563E	P,T
Synthesized Sweeper (2 required)	Frequency Range: E4407B or E4408B: 10 MHz to 26.5 GHz All others: 10 MHz to 13.2 GHz Frequency Accuracy (CW): ±0.02% Leveling Modes: Internal and External Modulation Modes: AM Power Level Range: –40 to 16 dBm	83630/40/50B 83620/30/B 40/50B	P,A,T
Function Generator	Frequency Range: 0.1 Hz to 15 MHz Frequency Accuracy: ±0.02% Waveform: Triangle, Square, Sine	33120A or 3325B	P,A,T
Attenuator/Switch Driver	Compatible with HP/Agilent 8494G and 8496G Programmable step attenuators	11713A	P

ManualsPlus.com

Table 1-9 Recommended Test Equipment

Equipment	Critical Specifications for Equipment Substitution	Recommended HP/Agilent Model	Use [a]
Attenuator, 1 dB Step	Attenuation Range: 0 to 11 dB Frequency Range: 50 MHz ±1 MHz Connectors: Type-N female Calibrated at 50 MHz with accuracy of 1 to 11 dB attenuation: ±0.010 dB.	8494A/G	P
Attenuator, 10 dB Step	Attenuation Range: 0 to 110 dB Frequency Range: 50 MHz ±1 MHz Connectors: Type-N female Calibrated at 50 MHz with accuracy of: 0 to 40 dB attenuation: ±0.020 dB 50 to 100 dB attenuation: ±0.065 dB 110 dB attenuation: ±0.075 dB	8496A/G	P
Attenuator, 10 dB Fixed	Nominal attenuation: 10 dB Frequency Range: dc to 3 GHz Connectors: Type-N(m) and Type-N(f)	8491A Option 010	P
Attenuator, 6 dB Fixed (2 required)	Nominal attenuation: 6 dB Frequency Range: 50 MHz ±1 MHz VSWR: <1.1: 1 at 50 MHz	8491A Option 006	P
Attenuator, 20 dB Fixed	Nominal attenuation: 20 dB Frequency Range: 100 kHz to 3 GHz VSWR: <1.2: 1 at ≤3 GHz	8491A Option 020	P
Attenuator Interconnect Kit	Mechanically and electrically connects HP/Agilent 8494A/G and HP/Agilent 8496A/G	11716 Series	

a. P = Performance Test, A = Adjustment, T = Troubleshooting

Table 1-10 Recommended Accessories

Equipment	Critical Specifications for Accessory Substitution	Recommended HP/Agilent Model	Use [a]
Directional Bridge	Frequency Range: 5 MHz to 3 GHz Directivity: >40 dB Coupling factor: 16 dB nominal Insertion Loss: 2 dB maximum	86205A	P

ManualsPlus.com

Table 1-10 Recommended Accessories

Equipment	Critical Specifications for Accessory Substitution	Recommended HP/Agilent Model	Use [a]
Power Splitter (for E4401B/ 02B/03B/11B)	Frequency Range: 9 kHz to 13.2 GHz Insertion Loss: 6 dB nominal Output Tracking: <0.25 dB Equivalent Output SWR: <1.22:1	11667A	P,A
Power Splitter (for E4404B/ 05B/07B/08B)	Frequency Range: 9 kHz to 26.5 GHz Insertion Loss: 6 dB nominal Output Tracking: <0.25 dB Equivalent Output SWR: <1.22:1	11667B	
Directional Coupler (for E4404B/05B/ 07B/08B)	Frequency Range: 2 GHz to 15 GHz Directivity: >16 dB Max.VSWR: 1.35:1 Transmission Arm Loss: <1.5 dB (nominal) Coupled Arm Loss: ~ 10 dB (nominal)	87300B	
Termination, 50 Ω (2 required for Option 1DN)	Impedance: 50 Ω nominal Connector: Type-N (m)	909A	P,T
Termination, 50 Ω	Impedance: 50 Ω (nominal) Connector: BNC (m)	11593A	P,A
Termination, 75 Ω (Option 1DQ, 1DP)	Impedance: 75 Ω (nominal) (2 required for Option 1DQ) (1 required for Option 1DP)	909E Option 201	P,T
50 MHz Low Pass Filter	Cutoff Frequency: 50 MHz Rejection at 65 MHz: >40 MHz Rejection at 75 MHz: >60 dB	0955-0306	P
300 MHz Low Pass Filter	Cutoff Frequency: 300 MHz Rejection at >435 MHz: >45 dB	0955-0455	P
1 GHz Low Pass Filter	Cutoff Frequency: 1 GHz Rejection at >2 GHz: >60 dB	0955-0487	P

ManualsPlus.com

Table 1-10 Recommended Accessories

Equipment	Critical Specifications for Accessory Substitution	Recommended HP/Agilent Model	Use [a]
1.8 GHz Low Pass Filter (for E4404/5/7/8B)	Cutoff Frequency: 1.8 GHz Rejection at >3 GHz: >45 dB	0955-0491 (2 required)	P
4.4 GHz Low Pass Filter (for E4404/5/7/8B)	Cutoff Frequency: 4.4 GHz Rejection at >5.5 GHz: >42 dB	9135-0005 or 360D (2 required)	P

a. P = Performance Test, A = Adjustment, T = Troubleshooting

ManualsPlus.com

Table 1-11 Recommended Adapters

Critical Specifications for Adapter Substitution	Recommended HP/Agilent Model	Use [a]
BNC (m) to BNC (m)	1250-0216	P,T
BNC tee (f,m,f)	1250-0781	A,T
Type-N (f) to APC 3.5 (f)	1250-1745	P,A,T
Type-N (f) to BNC (m)	1250-1477	P,T
Type-N (f) to BNC (m), 75 Ω (2 required for Option 1DQ) (1 required for Option 1DP)	1250-1534	P,A,T
Type-N (m) to BNC (f) (4 required)	1250-1476	P,A,T
Type-N (m) to BNC (m) (2 required)	1250-1473	P,T
Type-N (m) to BNC (m), 75 Ω (Option 1DP)	1250-1533	P,A,T
Type-N (m) to Type-N (m)	1250-1472	P,T
Type-N (m) to Type-N (m)	1250-1475	P,A,T
Type-N (f) to Type-N (f), 75 Ω (Option 1DP)	1250-1529	P,A,T
Type-N (f), 75 Ω, to Type-N (m), 50 Ω (Option 1DP)	1250-0597	P,A,T
Type-N (m) to SMA (m)	1250-1636	P
50 to 75 Ω Minimum Loss Frequency Range: dc to 1.5 GHz Insertion Loss: 5.7 dB, nominal (Option 1DP)	11852B	P,A,T
Type N(f) to Type N(f)	1250-0777	
Type N(f) to BNC(f), 75 ohm (Option 1DP only)	1250-1535	
Type N (m) to APC 3.5 (f) (3 required)	1250-1744	
APC 3.5 (f) to APC 3.5 (f)	1250-1749	
Dual Banana to BNC (f)	1251-2277	P,A,T
Type N (m) to BNC (f) (2 required)	1250-0780	

a. P = Performance Test, A = Adjustment, T = Troubleshooting

ManualsPlus.com

Table 1-12 Recommended Cables

Critical Specifications for Cable Substitution	Recommended HP/Agilent Model	Use [a]
Frequency Range: dc to 1 GHz Length: ≥122 cm (48 in) Connectors: BNC (m) both ends (4 required)	10503A	P,A,T
Type-N, 62 cm (24 in)	11500C	P,T
Type-N, 152 cm (60 in) (2 required)	11500D	P,A,T
Frequency Range: dc to 310 MHz Length: 23 cm (9 in) Connectors: BNC (m) both ends	10502A	P,T
BNC, 75 Ω, 30 cm (12 in) (Option 1DP)	5062-6452	P,A,T
Cable, Test Length: ≥91 cm (36 in) Connectors: SMB (f) to BNC (m) (2 required)	85680-60093	T
APC 3.5 Cable Frequency: 9 kHz to 26.5 GHz Connectors: APC 3.5 (m) Length: >92 cm (36 in) (2 required)	8120-4921	P,A,T

a. P = Performance Test, A = Adjustment, T = Troubleshooting

ManualsPlus.com

2 Performance Verification Tests

These tests verify the electrical performance of the analyzer. Allow the analyzer to warm up in accordance with the temperature stability specifications before performing the tests.

ManualsPlus.com

Tests included in this section:

1. 10 MHz Reference Output Accuracy

2. 10 MHz High-Stability Frequency Reference Output Accuracy: Agilent E4401B, E4402B, E4404B, E4405B, and E4407B (Option 1D5)

3. Frequency Readout and Marker Frequency Count Accuracy: Agilent E4401B, E4402B, E4403B, and E4411B

4. Frequency Readout and Marker Frequency Count Accuracy: Agilent E4404B, E4405B, E4407B, and E4408B

5. Frequency Span Accuracy: Agilent E4401B and E4411B

6. Frequency Span Accuracy: Agilent E4402B, E4403B, E4404B, E4405B, E4407B, and E4408B

7. Noise Sidebands

8. Noise Sidebands - Wide Offsets: Agilent E4402B, E4404B, E4405B and E4407B

9. System-Related Sidebands

10. Residual FM

11. Sweep Time Accuracy

12. Display Scale Fidelity

13. Input Attenuation Switching Uncertainty

14. Reference Level Accuracy: Agilent E4401B and E4411B

15. Reference Level Accuracy: Agilent E4402B, E4403B, E4404B, E4405B, E4407B, and E4408B.

16. Resolution Bandwidth Switching Uncertainty

17. Absolute Amplitude Accuracy (Reference Settings): Agilent E4401B and E4411B

18. Absolute Amplitude Accuracy (Reference Settings): Agilent E4402B, E4403B, E4404B, E4405B, E4407B, and E4408B

19. Overall Absolute Amplitude Accuracy: Agilent E4401B and E4411B

20. Overall Absolute Amplitude Accuracy: Agilent E4402B, E4403B, E4404B, E4405B, E4407B, and E4408B

21. Resolution Bandwidth Accuracy

22. Frequency Response: Agilent E4401B and E4411B

ManualsPlus.com

23. Frequency Response, Agilent E4402B and E4403B

24. Frequency Response, Agilent E4404B, E4405B, E4407B, and E4408B

25. Frequency Response (Preamp On): Agilent E4401B

26. Frequency Response (Preamp On): Agilent E4402B

27. Frequency Response (Preamp On): Agilent E4404B, E4405B, and E4407B

28. Other Input-Related Spurious Responses: Agilent E4401B and E4411B

29. Other Input-Related Spurious Responses: Agilent E4402B, E4403B, E4404B, E4405B, E4407B, and E4408B

30. Spurious Responses: Agilent E4401B and E4411B

31. Spurious Responses: Agilent E4402B and E4403B

32. Spurious Responses: Agilent E4404B, E4405B, E4407B, and E4408B

33. Gain Compression: Agilent E4401B, E4402B, E4403B, and E4411B

34. Gain Compression: Agilent E4404B, E4405B, E4407B, and E4408B

35. Displayed Average Noise Level: Agilent E4401B and E4411B

36. Displayed Average Noise Level: Agilent E4402B and E4403B

37. Displayed Average Noise Level: Agilent E4404B and E4405B

38. Displayed Average Noise Level: Agilent E4407B and E4408B

39. Residual Responses

40. Fast Time Domain Amplitude Accuracy: Agilent E4401B, E4402B, E4404B, E4405B, and E4407B (Option AYX)

41. Tracking Generator Absolute Amplitude and Vernier Accuracy: Agilent E4401B and E4411B (Option 1DN or 1DQ)

42. Tracking Generator Absolute Amplitude and Vernier Accuracy: Agilent E4402B, E4403B, E4404B, E4405B, E4407B, and E4408B (Option 1DN)

43. Tracking Generator Level Flatness: Agilent E4401B and E4411B (Option 1DN or 1DQ)

44. Tracking Generator Level Flatness: Agilent E4402B, E4403B, E4404B, E4405B, E4407B, and E4408B (Option 1DN)

45. Tracking Generator Harmonic Spurious Outputs: Agilent E4401B and E4411B (Option 1DN or 1DQ)

ManualsPlus.com

Tests included in this section:

46. Tracking Generator Harmonic Spurious Outputs: Agilent E4402B, E4403B, E4404B, E4405B, E4407B, and E4408B (Option 1DN)

47. Tracking Generator Non-Harmonic Spurious Outputs: Agilent E4401B and E4411B (Option 1DN or 1DQ)

48. Tracking Generator Non-Harmonic Spurious Outputs: Agilent E4402B, E4403B, E4404B, E4405B, E4407B, and E4408B (Option 1DN)

49. Tracking Generator LO Feedthrough: Agilent E4402B, E4403B, E4404B, E4405B, E4407B, and E4408B(Option 1DN)

50. Gate Delay Accuracy and Gate Length Accuracy: Agilent E4401B, E4402B, E4404B, E4405B, and E4407B (Option 1D6)

51. Gate Mode Additional Amplitude Error: Agilent E4401B, E4402B, E4404B, E4405B, and E4407B (Option 1D6)

52. First LO OUTPUT Power Accuracy (Option AYZ only)

53. IF INPUT Accuracy (Option AYZ only)

54. Comms Frequency Response (Option BAC or BAH)

55. This Test Has Been Deleted (Modulation Accuracy – Rho)

56. This Test Has Been Deleted (CDMA Modulation Accuracy – EVM)

57. This Test Has Been Deleted (CDMA Code Domain Power)

58. GSM Phase and Frequency Error (Options BAH and B7E)

59. Comms Absolute Power Accuracy (Options BAC or BAH)

ManualsPlus.com

Calibration

To perform calibration:

1. Run all performance verification tests listed in Column 1 of Table 2-1 that are applicable to the analyzer being calibrated and the installed options. Refer to the Performance Verification test tables in Chapter 1 for a list of the tests that are applicable to the analyzer being calibrated.
2. If any of the performance verification tests fail, perform the appropriate calibration adjustments listed in Column 2 of Table 2-1 which corresponds to the failure.
3. Repeat all of the performance verification tests listed in Column 1 of Table 2-1 if any calibration adjustments were made in step 2. This will confirm that there is no interaction between adjustments which could negatively impact analyzer performance.

Table 2-1 lists the performance verification tests and adjustments needed for calibration. The performance tests are located in the following pages of this chapter. Adjustment information is located in the service guide.

ManualsPlus.com

Table 2-1 Calibration Requirements

Test #	Performance Verification Tests	Calibration Adjustments
1.	10 MHz Reference Output Accuracy	10 MHz Frequency Reference Adjustment
2.	10 MHz High-Stability Frequency Reference Output Accuracy	10 MHz Frequency Reference Adjustment
3.	Frequency Readout and Marker Frequency Count Accuracy	None
4.	Frequency Readout and Marker Frequency Count Accuracy	None
5.	Frequency Span Accuracy	None
6.	Frequency Span Accuracy	None
7.	Noise Sidebands	None
8.	Noise Sidebands - Wide Offsets	None
9.	System-Related Sidebands	IF Amplitude
10.	Residual FM	None
11.	Sweep Time Accuracy	None
12.	Display Scale Fidelity	IF Amplitude
13.	Input Attenuation Switching Uncertainty	50 MHz Amplitude Reference
14.	Reference Level Accuracy	IF Amplitude
15.	Reference Level Accuracy	IF Amplitude
16.	Resolution Bandwidth Switching Uncertainty	IF Amplitude
17.	Absolute Amplitude Accuracy (Reference Settings)	None
18.	Absolute Amplitude Accuracy (Reference Settings)	None
19.	Overall Absolute Amplitude Accuracy	Frequency Response Adjustment
20.	Overall Absolute Amplitude Accuracy	None
21.	Resolution Bandwidth Accuracy	IF Amplitude
22.	Frequency Response	Frequency Response
23.	Frequency Response	Frequency Response

ManualsPlus.com

Table 2-1 Calibration Requirements

Test #	Performance Verification Tests	Calibration Adjustments
24.	Frequency Response	Frequency Response
25.	Frequency Response (Preamp On)	Frequency Response
26.	Frequency Response (Preamp On)	Frequency Response
27.	Frequency Response (Preamp On)	Frequency Response
28.	Other Input-Related Spurious Responses	None
29.	Other Input-Related Spurious Responses	None
30.	Spurious Responses	None
31.	Spurious Responses	None
32.	Spurious Responses	None
33.	Gain Compression	None
34.	Gain Compression	None
35.	Displayed Average Noise Level	Frequency Response
36.	Displayed Average Noise Level	Frequency Response
37.	Displayed Average Noise Level	Frequency Response
38.	Displayed Average Noise Level	Frequency Response
39.	Residual Responses	None
40.	Fast Time Domain Amplitude Accuracy	None
41.	Tracking Generator Absolute Amplitude and Vernier Accuracy	Tracking Generator ALC and Tracking Generator Frequency Slope
42.	Tracking Generator Absolute Amplitude and Vernier Accuracy	Tracking Generator ALC and Tracking Generator Frequency Slope
43.	Tracking Generator Level Flatness	Tracking Generator ALC and Tracking Generator Frequency Slope
44.	Tracking Generator Level Flatness	Tracking Generator ALC and Tracking Generator Frequency Slope
45.	Tracking Generator Harmonic Spurious Outputs	None
46.	Tracking Generator Harmonic Spurious Outputs	None

ManualsPlus.com

Table 2-1 Calibration Requirements

Test #	Performance Verification Tests	Calibration Adjustments
47.	Tracking Generator Non-Harmonic Spurious Outputs	None
48.	Tracking Generator Non-Harmonic Spurious Outputs	None
49.	Tracking Generator L.O. Feedthrough	LO Power
50.	Gate Delay Accuracy and Gate Length Accuracy	None
51.	Gate Mode Additional Amplitude Error	None
52.	First LO OUTPUT Power Accuracy	LO Power
53.	IF INPUT Accuracy	IF INPUT Correction
54.	Comms Frequency Response	Frequency Response Error Correction
55.	*Deleted*	None
56.	*Deleted*	None
57.	*Deleted*	None
58.	GSM Phase and Frequency Error	None
59.	Comms Absolute Power Accuracy	IF Amplitude Adjustment

Manual use of Agilent 8494G and Agilent 8496G Attenuators with the Agilent 11713A

When using the programmable versions of the 1 dB and 10 dB step attenuator (Agilent 8494G and Agilent 8496G), the Agilent 11713A Attenuator/ Switch Driver must be used to control the attenuators. The Agilent 8494G 1 dB step attenuator should be connected as Attenuator X and the Agilent 8496G 10 dB step attenuator should be connected as Attenuator Y.

Use Table 2-2 to determine which of the Attenuator X and Attenuator Y settings are use to set the step attenuators to the desired value. In the columns labeled Attenuator X and Attenuator Y, a “1” indicates that section is on (the LED in the button will be lit), while a “0” indicates that section is off. For example, if the 1 dB step attenuator should be set to 2 dB and the 10 dB step attenuator should be set to 60 dB, sections 2, 6, and 7 should be on (lit) and all other sections should be off.

ManualsPlus.com

Table 2-2 Agilent 11713A Settings for Agilent 8494G and Agilent 8496G

1 dB Step Atten (dB)	Attenuator X				10 dB Step Atten (dB)	Attenuator Y			
	1	2	3	4		5	6	7	8
0	0	0	0	0	0	0	0	0	0
1	1	0	0	0	10	1	0	0	0
2	0	1	0	0	20	0	1	0	0
3	1	1	0	0	30	1	1	0	0
4	0	0	1	0	40	0	0	1	0
5	1	0	1	0	50	1	0	1	0
6	0	1	1	0	60	0	1	1	0
7	1	1	1	0	70	1	1	1	0
8	0	0	1	1	80	0	0	1	1
9	1	0	1	1	90	1	0	1	1
10	0	1	1	1	100	0	1	1	1
11	1	1	1	1	110	1	1	1	1

ManualsPlus.com

1. 10 MHz Reference Output Accuracy

The setability is measured by changing the settings of the digital-to-analog converter (DAC), which controls the frequency of the timebase. The difference in frequency for each DAC step is calculated and compared to the specification.

The related adjustment for this performance verification test is the "10 MHz Reference Frequency Adjustment."

Equipment Required

Universal counter (Instructions are for Agilent 53132A. For Agilent 5316B, refer to its user documentation.)
Frequency standard
Cable, BNC, 122-cm (48-in) (*2 required*)

Figure 2-1 10 MHz Reference Test Setup

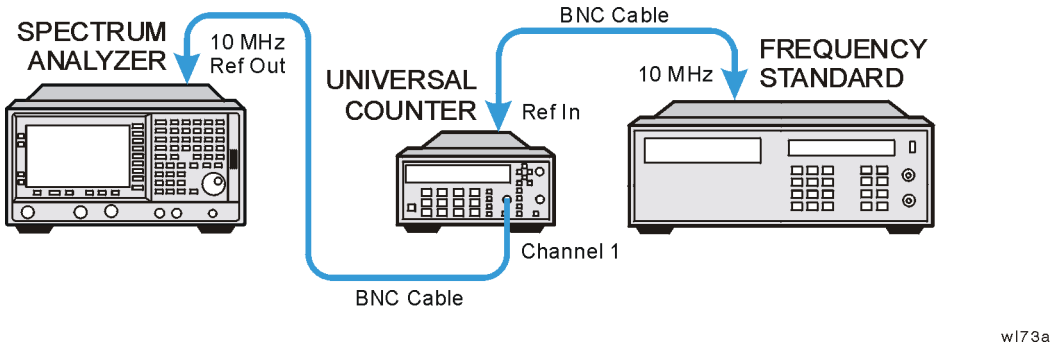

Procedure

1. Connect the equipment as shown in Figure 2-1. The frequency standard provides the reference for the universal counter.
2. Check that the analyzer is not in external reference mode. If `Ext Ref` appears on the screen, the analyzer is in external reference mode. If the analyzer is in external reference mode, disconnect the external reference.
3. *Ensure that the analyzer has been on and in internal frequency mode for at least five minutes before proceeding.*
4. Set the universal counter controls as follows:
   a. Press **Gate & ExtArm**.
   b. Press any one of the arrow keys until `TIME` is displayed.
   c. Press **Gate & ExtArm** again. Using the arrow keys, set the time to

ManualsPlus.com

10 s.

d. Press **Enter**.

e. On Channel 1, press **50 Ω/1 MΩ** until the LED is lit.

f. On Channel 1, press **x10 Attenuator** until the LEd is extinguished.

g. On Channel 1, press **AC/DC** until the LED next to DC is extinguished.

h. On Channel 1, press **100 kHz Filter** until the LED is extinguished.

i. On Channel 1, press **Trigger/Sensitivity** until `Auto Trig` is displayed.

j. Use the arrow keys to toggle to off.

k. Press **Freq & Ratio**.

5. Wait for the universal counter reading to stabilize. Record the universal counter reading in Table 2-3 as Counter Reading 1 with 0.1 Hz resolution.

6. Set the analyzer by pressing the following keys:

   System, **Alignments**, **Timebase**, **Fine**

7. Record the number in the active function block of the analyzer in Table 2-3 as Timebase Fine.

8. Press the ↑ (up arrow) key on the analyzer.

9. Wait for the frequency counter reading to stabilize. Record the frequency counter reading in Table 2-3 as Counter Reading 2 with 0.1 Hz resolution.

10. Press the ↓ (down arrow) key on the analyzer 2 times.

11. Wait for the frequency counter reading to stabilize. Record the frequency counter reading in Table 2-3 as Counter Reading 3 with 0.1 Hz resolution.

12. Press **Preset** on the analyzer to return the DAC settings to their initial values. Press the **Factory Preset** softkey, if it is displayed.

13. Subtract Counter Reading 1 from Counter Reading 2 and record the difference in Table 2-3 as the Positive Frequency Change.

    Positive Frequency Change = Counter Reading 2 – Counter Reading 1

14. Subtract Counter Reading 3 from Counter Reading 1 and record the difference in Table 2-3 as the Positive Frequency Change.

    Negative Frequency Change = Counter Reading 1 – Counter Reading 3

15. Of the Positive Frequency Change and negative frequency change values recorded in Table 2-3, record the largest value in Table 2-3 as

ManualsPlus.com

the maximum frequency change.

16. Divide the maximum frequency change by two and record the result as the settability.

Table 2-3 10 MHz Reference Accuracy Worksheet

Description	Measurement
Counter Reading 1	_____ Hz
Timebase Fine DAC	_____ Hz
Counter Reading 2	_____ Hz
Counter Reading 3	_____ Hz
Positive Frequency Change	_____ Hz
Negative Frequency Change	_____ Hz
Maximum Frequency Change	_____ Hz
Settability	_____ Hz

ManualsPlus.com

2. 10 MHz High-Stability Frequency Reference Output Accuracy: Agilent E4401B, E4402B, E4404B, E4405B, and E4407B (Option 1D5)

This test applies only to analyzers equipped with the high-stability frequency reference, Option 1D5. If your analyzer does not have Option 1D5, perform the “10 MHz Reference Output Accuracy” test instead.

This test measures the warmup characteristics of the 10 MHz reference oscillator. The ability of the 10 MHz oscillator to meet its warmup characteristics gives a high level of confidence that it will also meet its yearly aging specification.

The universal counter is connected to the 10 MHz REF OUT. After the analyzer has been allowed to cool for at least 60 minutes, the analyzer is powered on. A frequency measurement is made five minutes after power is applied and the frequency is recorded. Another frequency measurement is made 10 minutes later (15 minutes after power is applied) and the frequency is recorded. A final frequency measurement is made 60 minutes after power is applied. The difference between each of the first two frequency measurements and the last frequency measurement is calculated and recorded.

The related adjustment for this performance verification test is the “10 MHz Reference Frequency Adjustment.”

Equipment Required

- ❑ Universal counter (Instructions are for Agilent 53132A. For Agilent 5316B, refer to its user documentation.)
- ❑ Frequency standard
- ❑ Cable, BNC, 122-cm (48-in) (*2 required*)

Figure 2-2 Frequency Reference Test Setup

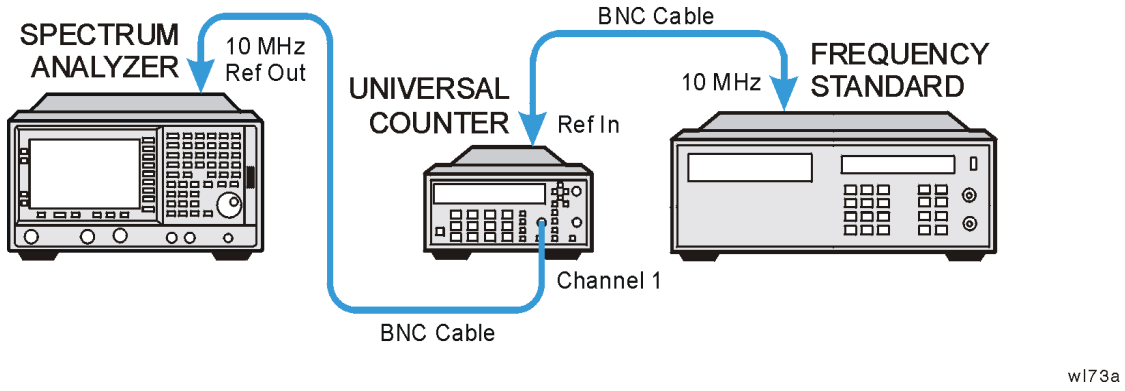

ManualsPlus.com

Procedure

The analyzer must have been allowed to sit with the power off for at least 60 minutes before performing this procedure. This adequately simulates a cold start.

1. *Allow the analyzer to sit with the power off for at least 60 minutes before proceeding.*
2. Switch the power to the analyzer on. Record the Power On Time below.

   Power On Time_____
3. Connect the equipment as shown in Figure 2-2. The frequency standard provides the reference for the universal counter. Disconnect any cable to the 10 MHz REF INPUT of the analyzer.
4. Check that the analyzer is not in external reference mode. `Ext Ref` will appear on the display if the analyzer is in external reference mode. If the analyzer is in external reference mode, disconnect the external reference.
5. Set the universal counter controls as follows:
   a. Press **Gate & ExtArm**.
   b. Press any one of the arrow keys until `TIME` is displayed.
   c. Press **Gate & ExtArm** again. Using the arrow keys, set the TIME to 10s.
   d. Press **Enter**
   e. On Channel 1, press **50 Ω/1 MΩ** to light the LED next to 50 Ω.
   f. On Channel 1, press **AC/DC** to extinguish the LED next to DC.
   g. On Channel 1, press **x10 Attenuator** to extinguish the LED next to x10 Attenuator.
   h. On Channel 1, press **100 kHz Filter** to extinguish the LED next to 100 kHz Filter.
   i. On Channel 1, press **Trigger/Sensitivity** until `Auto Trig` is displayed.
   j. Use the arrows keys to toggle to off.
   k. Press **Freq & Ratio**
6. Continue with the next step 5 minutes after the Power On Time noted in step 2.
7. Wait for the universal counter reading to make at least two readings. Record the universal counter reading in Table 2-3 as Counter Reading 1 with 0.001 Hz resolution.

ManualsPlus.com

8. Continue with next step 15 minutes after the Power On Time noted in step 2.
9. Wait for the universal counter reading to make at least two readings. Record the universal counter reading in Table 2-3 as Counter Reading 2 with 0.001 Hz resolution.
10. Continue with next step 60 minutes after the Power On Time noted in step 2.
11. Wait for the universal counter reading to make at least two readings. Record the universal counter reading in Table 2-3 as Counter Reading 3 with 0.001 Hz resolution.
12. Calculate the 5 Minute Warm-up Error (in ppm) by subtracting Counter Reading 3 from Counter Reading 1 and dividing the result by 10.

    5 Minute Warm-up Error = (Counter Reading 1 – Counter Reading 3)/10

NOTE Dividing the frequency by 10 is equivalent to dividing the difference first by 10 MHz (to normalize the difference to the reference frequency) and then multiplying by 1 x 106 to convert the result to parts-per-million (ppm).

13. Record the 5 Minute Warm-up Error (in ppm) in the performance verification test record as Test Record entry 1.
14. Calculate the 15 Minute Warm-up Error (in ppm) by subtracting Counter Reading 3 from Counter Reading 2 and dividing the result by 10.

    15 Minute Warm-up Error = (Counter Reading 2 – Counter Reading 3)/10

15. Record the 15 Minute Warm-up Error in the performance verification test record as Test Record entry 2.

Table 2-4 10 MHz Reference Accuracy Worksheet

Description	Measurement
Counter Reading 1	_____ Hz
Counter Reading 2	_____ Hz
Counter Reading 3	_____ Hz

ManualsPlus.com

3. Frequency Readout and Marker Frequency Count Accuracy: Agilent E4401B, E4402B, E4403B, and E4411B

The frequency readout accuracy of the analyzer is tested with an input signal of known frequency. By using the same frequency standard for the analyzer and the synthesized sweeper, the frequency reference error is eliminated.

There are no related adjustment procedures for this performance test.

Equipment Required

Synthesized sweeper
Adapter, Type N (f) to APC 3.5 (m)
Cable, Type N, 183 cm (72 in)
Cable, BNC, 122 cm (48 in)

Additional Equipment for 75 Ω Input

Pad, minimum loss
Adapter, Type N (f) to BNC (m), 75 Ω

Procedure

Figure 2-3 Frequency Readout and Marker Frequency Accuracy Test Setup

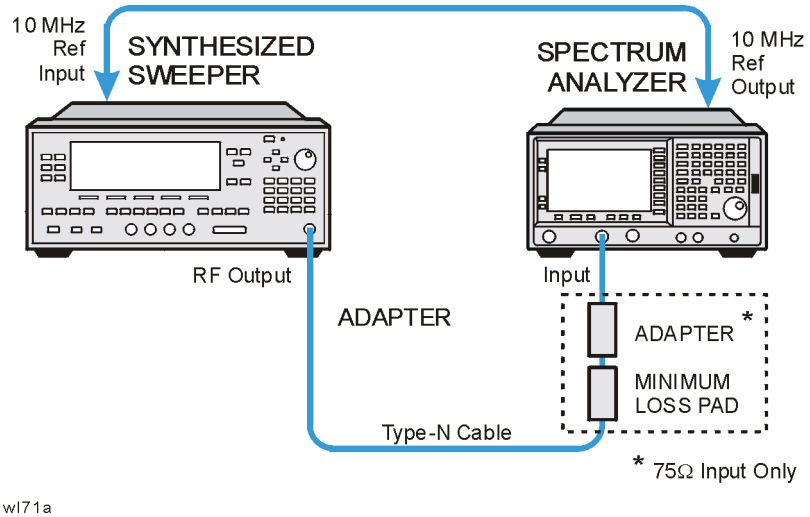

This performance test consists of two parts:

"Part 1: Frequency Readout Accuracy"

ManualsPlus.com

"Part 2: Marker Count Accuracy"

Perform "Part 1: Frequency Readout Accuracy" before "Part 2: Marker Count Accuracy".

Part 1: Frequency Readout Accuracy

1. Connect the equipment as shown in Figure 2-3. Remember to connect the 10 MHz REF OUT of the analyzer to the 10 MHz REF INPUT of the synthesized sweeper.

CAUTION Use only 75 Ω cables, connectors, or adapters on instruments with 75 Ω inputs, or the input connector will be damaged.

2. Perform the following steps to set up the equipment:
   a. Press **INSTRUMENT PRESET** on the synthesized sweeper, then set the controls as follows:

      CW, **1.490 GHz** (*Agilent E4401B and E4411B*)
      CW, **1.5 GHz** (*Agilent E4402B and E4403B*)
      POWER LEVEL, **–10 dBm**

   b. Press **Preset** on the analyzer. Press the **Factory Preset** softkey, if it is displayed. Set the analyzer by pressing the following keys:

      FREQUENCY, **1.5 GHz**
      SPAN, 20 MHz

3. Press **Peak Search** (or **Search**) on the analyzer to measure the frequency readout accuracy.
4. Record the marker frequency reading in the performance verification test record.
5. Repeat step 3 and step 4 above for the remaining spans listed in Table 2-5.

Table 2-5 Frequency Readout Accuracy

Analyzer Span (MHz)	Test Record Entry, Actual Marker Frequency
20	**1**)
10	**2**)
1	**3**)

Part 2: Marker Count Accuracy

Perform "Part 1: Frequency Readout Accuracy" before performing this procedure.

1. Press **Preset** on the analyzer. Press the **Factory Preset** softkey, if it is

ManualsPlus.com

displayed. Set the analyzer to measure the marker count accuracy by pressing the following keys:

FREQUENCY, **1.490 GHz** (*Agilent E4401B and E4411B*)
FREQUENCY, **1.5 GHz** (*Agilent E4402B and E4403B*)
SPAN, **10 MHz**
BW/Avg, **Res BW**, **100 kHz** (Man)
Freq Count, Marker Count (On)
Resolution (Man), **1 Hz**

2. Press **Peak Search** (or **Search**), then wait for a count be taken (it may take several seconds).
3. Record the counter (`Cntr1`) frequency reading as Test Record entry 4 of the performance verification test record.
4. On the analyzer, press **SPAN, 1 MHz**.
5. Press **Peak Search** (or **Search**), then wait for a count be taken (it may take several seconds).
6. Record the counter (`Cntr1`) frequency reading as Test Record entry 5 of the performance verification test record.

ManualsPlus.com

4. Frequency Readout and Marker Frequency Count Accuracy: Agilent E4404B, E4405B, E4407B, and E4408B

The frequency readout accuracy of the analyzer is tested with an input signal of known frequency. By using the same frequency standard for the analyzer and the synthesized sweeper, the frequency reference error is eliminated.

There are no related adjustment procedures for this performance test.

Equipment Required

Synthesized sweeper
Adapter, Type N (m) to APC 3.5 (f)
Adapter, APC 3.5 (f) to APC 3.5 (f)
Cable, APC 3.5, 91 cm (36 in)
Cable, BNC, 122 cm (48 in)

Additional Equipment for Option BAB

Adapter, APC 3.5 (f) to APC 3.5 (f)

Figure 2-4 Frequency Readout and Marker Count Accuracy Test Setup

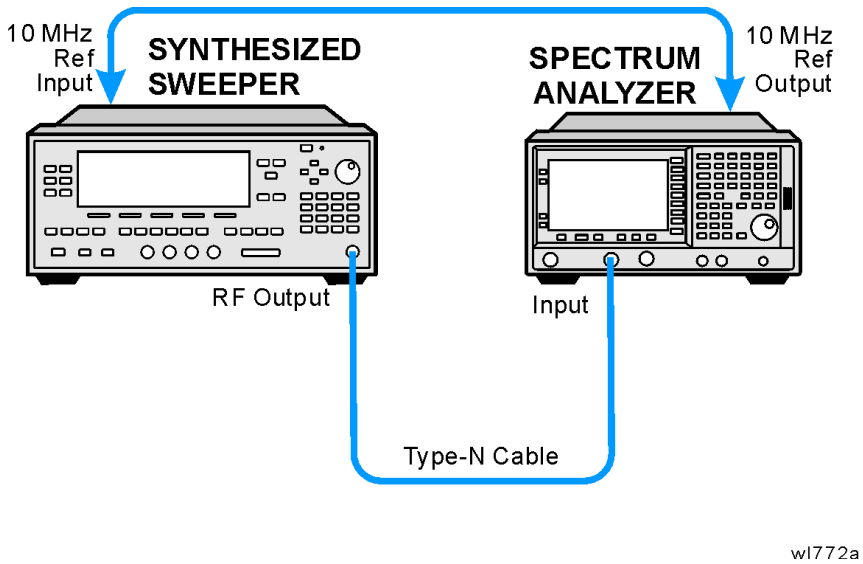

ManualsPlus.com

Procedure

This performance verification test consists of two parts:

"Part 1: Frequency Readout Accuracy"
"Part 2: Marker Count Accuracy"

Perform "Part 1: Frequency Readout Accuracy" before "Part 2: Marker Count Accuracy."

Part 1: Frequency Readout Accuracy

1. Connect the equipment as shown in Figure 2-4. Remember to connect the 10 MHz REF OUT of the analyzer to the 10 MHz REF INPUT of the synthesized sweeper.

   Option BAB only: Use the APC 3.5 adapter to connect the cable to the analyzer input.

2. Perform the following steps to set up the equipment:

   a. Press **INSTRUMENT PRESET** on the synthesized sweeper, then set the controls as follows:

      CW, **1.5 GHz**
      POWER LEVEL, **–10 dBm**

   b. Press **Preset** on the analyzer. Press the **Factory Preset** softkey, if it is displayed. Set the analyzer by pressing the following keys:

      FREQUENCY, 1.5 GHz
      SPAN, 20 MHz

3. Press **Peak Search** (or **Search**) on the analyzer to measure the frequency readout accuracy.

4. Record the marker (`Mkr1`) frequency reading in the performance verification test record as indicated in Table 2-6.

5. Change to the next analyzer span setting listed in Table 2-6.

6. Repeat step 3 through step 5 for each analyzer frequency and span setting and synthesized sweeper CW frequency setting listed in Table 2-6 for the analyzer being tested.

Table 2-6 **Frequency Readout Accuracy**

Synthesized Sweeper CW Frequency (MHz)	Analyzer Span (MHz)	Analyzer Center Frequency (GHz)	Test Record Entry Frequency (GHz)
1500	20	1.5	**1**)

ManualsPlus.com

Table 2-6 **Frequency Readout Accuracy**

Synthesized Sweeper CW Frequency (MHz)	Analyzer Span (MHz)	Analyzer Center Frequency (GHz)	Test Record Entry Frequency (GHz)
1500	10	1.5	**2**)
1500	1	1.5	**3**)
4000	20	4.0	**4**)
4000	10	4.0	**5**)
4000	1	4.0	**6**)
Stop here for Agilent E4404B.			
9000	20	9.0	**7**)
9000	10	9.0	**8**)
9000	1	9.0	**9**)
Stop here for Agilent E4405B.			
16000	20	16.0	**10**)
16000	10	16.0	**11**)
16000	1	16.0	**12**)
21000	20	21.0	**13**)
21000	10	21.0	**14**)
21000	1	21.0	**15**)

Part 2: Marker Count Accuracy

Perform "Part 1: Frequency Readout Accuracy" before performing this procedure.

1. Press **Preset** on the analyzer. Press the **Factory Preset** softkey, if it is displayed. Set the analyzer to measure the marker count accuracy by pressing the following keys:

   FREQUENCY, **1.5 GHz**
   SPAN, **20 MHz**
   BW/Avg, **Res BW**, **100 kHz** (Man)
   Freq Count, Marker Count (On)
   Resolution (Man)

2. Press **Peak Search** (or **Search**), then wait for a count be taken (it may take several seconds).

3. Record the counter (`Cntr1`) frequency reading in the performance

ManualsPlus.com

verification test record as indicated in Table 2-7.

4. Repeat step 2 and step 3 for each analyzer center frequency and span setting and synthesized sweeper CW frequency setting listed in Table 2-7 for the analyzer being tested.

Performance verification test “Frequency Readout Accuracy and Marker Count Accuracy” is now complete.

Table 2-7 Marker Count Accuracy

Synthesized Sweeper CW Frequency	**Analyzer Center Frequency**	**Analyzer Span**	**Counter Frequency (`Cntr1`)**
MHz	**GHz**	**MHz**	**Test Record Entry**
1500	1.5	20	**16**)
1500	1.5	1	**17**)
4000	4.0	20	**18**)
4000	4.0	1	**19**)
Stop here for Agilent E4404B.			
9000	9.0	20	**20**)
9000	9.0	1	**21**)
Stop here for Agilent E4405B.			
16000	16.0	20	**22**)
16000	16.0	1	**23**)
21000	21.0	20	**24**)
21000	21.0	1	**25**)

ManualsPlus.com

5. Frequency Span Accuracy: Agilent E4401B and E4411B

For testing each frequency span, two synthesized sources are used to provide two precisely-spaced signals. The analyzer marker functions are used to measure this frequency difference.

There are no related adjustment procedures for this performance test.

Equipment Required

Synthesized sweeper
Synthesized signal generator
Power splitter
Adapter, Type-N (m) to Type-N (m)
Adapter, Type-N (f) to APC 3.5 (f)
Cable, Type-N, 152-cm (60-in) *(2 required)*
Cable, BNC, 122-cm (48-in)

Additional Equipment for 75 Ω Input

Pad, minimum loss
Adapter, Type-N (f), to BNC (m), 75 Ω

Procedure

Full Span Frequency Span Readout Accuracy

1. Connect the equipment as shown in Figure 2-5. Note that the power splitter is used as a combiner. The synthesized signal generator provides the frequency reference for the synthesized sweeper.
2. Press **Preset** on the analyzer. Press the **Factory Preset** softkey, if it is displayed.
3. Press **PRESET** on the synthesized sweeper and set the controls as follows:

   CW, **1350 MHz**
   POWER LEVEL, **–5 dBm**

4. On the synthesized signal generator, set the controls as follows:

   FREQUENCY, 150 MHz
   AMPLITUDE, **0 dBm**

ManualsPlus.com

Figure 2-5 Frequency Span Readout Accuracy Test Setup

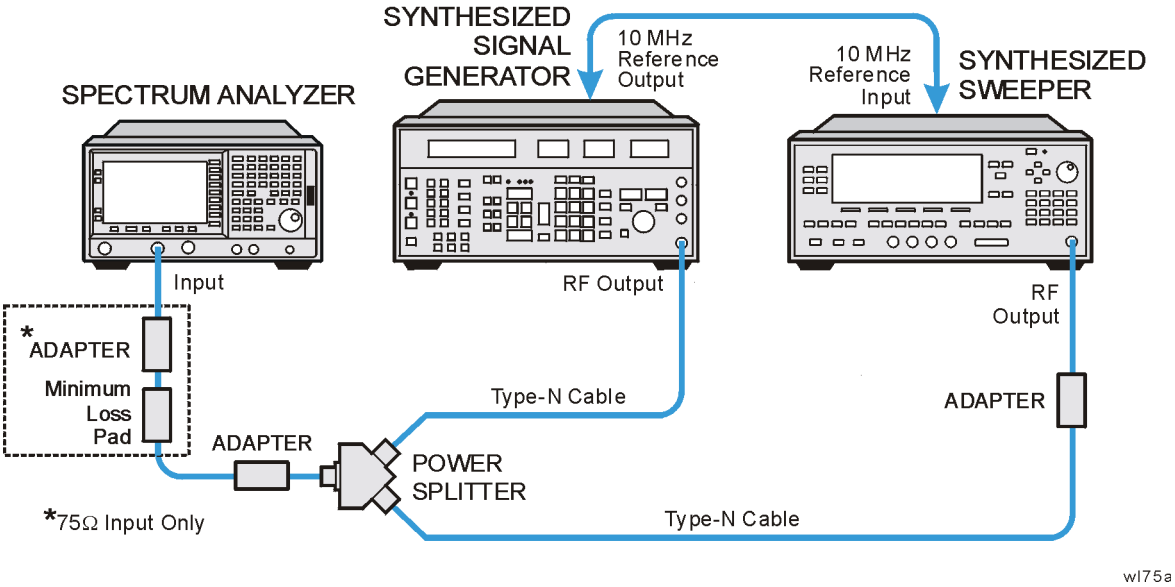

5. Adjust the analyzer center frequency, if necessary, to place the lower frequency on the second vertical graticule line (one division from the left-most graticule line).
6. On the analyzer, press **Single**. Wait for the completion of a new sweep, then press the following keys:

   Peak Search (or **Search**)
   Marker, Delta
   Peak Search (or **Search**)
   Next Peak

   The two markers should be on the signals near the second and tenth vertical graticule lines (the first graticule line is the left-most).
7. If necessary, continue pressing **Next Peak** until the active marker is on the right-most signal (1350 MHz).
8. Record the marker delta (Δ `Mkr1`) frequency reading as Test Record entry 1 of the performance verification test record.

100 kHz and 100 MHz Frequency Span Readout Accuracy

1. Set the analyzer by pressing the following keys:

   FREQUENCY, **Start Freq**, **10 MHz**
   Stop Freq, **110 MHz**
   Sweep, **Sweep** (Cont)
2. On the synthesized sweeper set the controls as follows:

ManualsPlus.com

CW, **100 MHz**
POWER LEVEL, **–5 dBm**

3. Set the synthesized signal generator controls as follows:

   FREQUENCY, **20 MHz**
   AMPLITUDE, **0 dBm**

4. Adjust the analyzer center frequency to center the two signals on the display.

5. On the analyzer, press **Single**. Wait for the completion of a new sweep, then press the following keys:

   Peak Search (or **Search**)
   Marker, Delta
   Peak Search (or **Search**)
   Next Peak

   The two markers should be on the signals near the second and tenth vertical graticule lines (the first graticule line is the left-most).

6. If necessary, continue pressing **Next Peak** until the active marker is on the right-most signal (100 MHz). Record the marker delta (Δ `Mkr1`) frequency reading in the performance test record as Test Record entry 2.

7. Press **Marker**, **More, Marker All Off** on the analyzer.

8. Change to the next equipment settings listed in Table 2-8.

9. On the analyzer, press **Single**. Wait for the completion of a newsweep, then press the following keys:

   Peak Search (or **Search**)
   Marker, Delta
   Peak Search (or **Search**)
   Next Peak

10. If necessary, continue pressing **Next Peak** until the marker delta is on the right-most signal. Record the marker delta (Δ `Mkr1`) frequency reading in the performance test record.

11. Repeat step 7 through step 10 for the remaining analyzer span settings listed in Table 2-8.

Table 2-8 Frequency Span Readout Accuracy

Analyzer Start Frequency (MHz)	Analyzer Stop Frequency (MHz)	Synthesized Signal Generator Frequency (MHz)	Synthesized Sweeper Frequency (MHz)	Test Record Entry	Analyzer Span (MHz)
0	1500	150	1350	1)	1500

ManualsPlus.com

Table 2-8 Frequency Span Readout Accuracy

Analyzer Start Frequency (MHz)	Analyzer Stop Frequency (MHz)	Synthesized Signal Generator Frequency (MHz)	Synthesized Sweeper Frequency (MHz)	Test Record Entry	Analyzer Span (MHz)
10	110	20	100	2)	100
10	10.1	10.01	10.09	3)	0.1
800	900	810	890	4)	100
800	800.1	800.01	800.09	5)	0.1
1400	1500	1410	1490	6)	100
1499	1499.1	1499.01	1499.09	7)	0.1

ManualsPlus.com

6. Frequency Span Accuracy: Agilent E4402B, E4403B, E4404B, E4405B, E4407B, and E4408B

For testing each frequency span, two synthesized sources are used to provide two precisely-spaced signals. The analyzer marker functions are used to measure this frequency difference.

There are no related adjustment procedures for this performance test.

Equipment Required

Synthesized sweeper
Synthesized signal generator
Power splitter
Adapter, Type-N (m) to Type-N (m)
Adapter, Type-N (f) to APC 3.5 (f)
Cable, Type-N, 152-cm (60-in) *(2 required)*
Cable, BNC, 122-cm (48-in)

Additional Equipment for Option BAB

Adapter, Type-N (m), to APC 3.5 (f)

Procedure

Full Span Frequency Span Readout Accuracy

1. Connect the equipment as shown in Figure 2-6. Note that the power splitter is used as a combiner. The synthesized signal generator provides the frequency reference for the synthesized sweeper.
2. Press **Preset** on the analyzer. Press the **Factory Preset** softkey, if it is displayed. Set the analyzer by pressing the following keys:

   FREQUENCY, **Stop Freq**, **3 GHz**

3. Press **PRESET** on the synthesized sweeper and set the controls as follows:

   CW, **2700 MHz**
   POWER LEVEL, **–5 dBm**

4. On the synthesized signal generator, set the controls as follows:

   FREQUENCY, 300 MHz
   AMPLITUDE, **0 dBm**

ManualsPlus.com

Figure 2-6 Frequency Span Readout Accuracy Test Setup

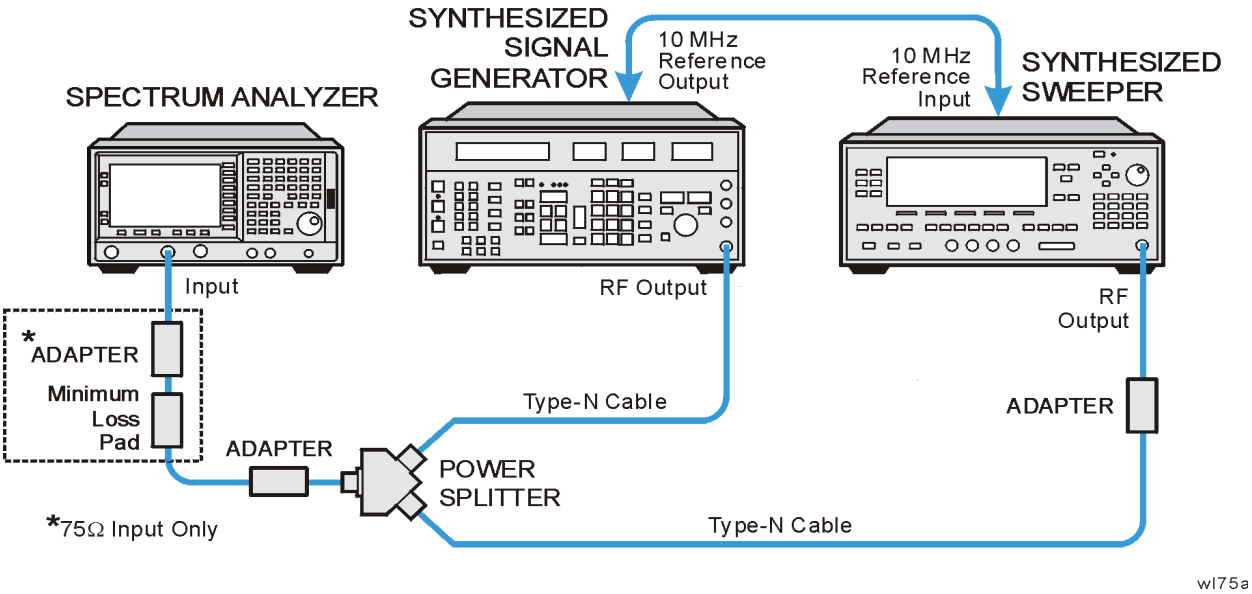

5. Adjust the analyzer center frequency, if necessary, to place the lower frequency on the second vertical graticule line (one division from the left-most graticule line).
6. On the analyzer, press **Single**. Wait for the completion of a new sweep, then press the following keys:

   Peak Search (or **Search**)
   Marker, Delta
   Peak Search (or **Search**)
   Next Peak

NOTE The two markers should be on the signals near the second and tenth vertical graticule lines (the first graticule line is the left-most).

7. If necessary, continue pressing **Next Peak** until the active marker is on the right-most signal (2700 MHz).
8. Record the marker delta (Δ `Mkr1`) frequency reading as Test Record entry 1 of the performance verification test record.

100 kHz and 100 MHz Frequency Span Readout Accuracy

1. Set the analyzer by pressing the following keys:

   FREQUENCY, **Start Freq**, **10 MHz**
   Stop Freq, **110 MHz**
   Sweep, **Sweep** (Cont)

2. On the synthesized sweeper set the controls as follows:

   CW, **100 MHz**

ManualsPlus.com

POWER LEVEL, **–5 dBm**

3. Set the synthesized signal generator controls as follows:

   FREQUENCY, **20 MHz**
   AMPLITUDE, **0 dBm**

4. Adjust the analyzer center frequency to center the two signals on the display.

5. On the analyzer, press **Single**. Wait for the completion of a new sweep, then press the following keys:

   Peak Search (or **Search**)
   Marker, Delta
   Peak Search (or **Search**)
   Next Peak

   The two markers should be on the signals near the second and tenth vertical graticule lines (the first graticule line is the left-most).

6. If necessary, continue pressing **Next Peak** until the active marker is on the right-most signal (100 MHz). Record the marker delta (Δ `Mkr1`) frequency reading in the performance test record as Test Record entry 2.

7. Press **Marker**, **More, Marker Off** on the analyzer.

8. Change to the next equipment settings listed in Table 2-9.

9. On the analyzer, press **Single.** Wait for the completion of a new sweep, then press the following keys:

   Peak Search (or **Search**)
   Marker, Delta
   Peak Search (or **Search**)
   Next Peak

10. If necessary, continue pressing **Next Peak** until the marker delta is on the right-most signal. Record the marker delta (Δ `Mkr1`) frequency reading in the performance test record.

11. Repeat step 7 through step 10 for the remaining analyzer span settings listed in Table 2-9.

ManualsPlus.com

Table 2-9 Frequency Span Readout Accuracy

Analyzer Start Frequency (MHz)	Analyzer Stop Frequency (MHz)	Synthesized Signal Generator Frequency (MHz)	Synthesized Sweeper Frequency (MHz)	Test Record Entry	Analyzer Span (MHz)
0	3000	300	2700	1)	3000
10	110	20	100	2)	100
10	10.1	10.01	10.09	3)	0.1
800	900	810	890	4)	100
800	800.1	800.01	800.09	5)	0.1
1400	1500	1410	1490	6)	100
1499	1499.1	1499.01	1499.09	7)	0.1

ManualsPlus.com

7. Noise Sidebands

A 1 GHz CW signal is applied to the input of the analyzer. The marker functions are used to measure the amplitude of the carrier and the noise level at 10 kHz, 20 kHz, and 30 kHz above and below the carrier. The 100 kHz offset from the carrier is also tested on Agilent E4401B and E4411B analyzers. For all other analyzers, the 100 kHz offset from the carrier is tested in performance test 8. Noise Sidebands - Wide Offsets: Agilent E4402B, E4404B, E4405B and E4407B.

There are no related adjustment procedures for this performance test.

Equipment Required

Synthesized signal generator
Cable, Type-N, 152-cm (60-in)

Additional Equipment for 75 Ω Input

Pad, minimum loss
Adapter, Type-N (f), to BNC (m), 75 Ω

Additional Equipment for Option BAB

Adapter, Type-N (f), to APC 3.5 (f)

Figure 2-7 Noise Sidebands Test Setup

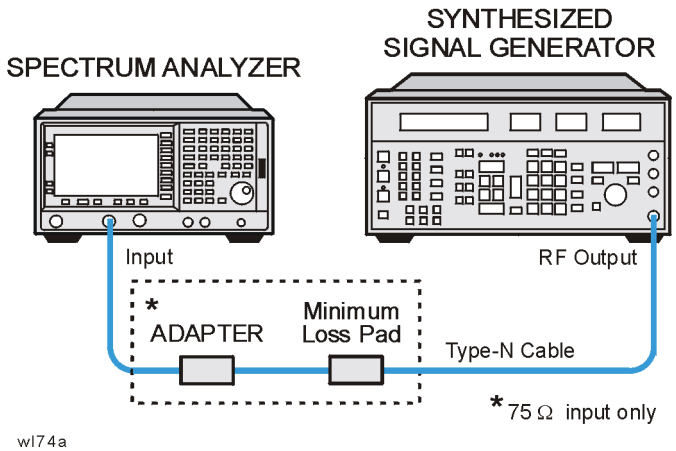

CAUTION Use only 75 Ω cables, connectors, or adapters on instruments with 75 Ω connectors, or the connectors will be damaged.

ManualsPlus.com

Procedure

This performance test consists of five parts:

Part 1: Noise Sideband Suppression at 10 kHz (measured in 1 kHz RBW)
Part 2: Noise Sideband Suppression at 10 kHz (measured in 100 Hz RBW)
Part 3: Noise Sideband Suppression at 20 kHz
Part 4: Noise Sideband Suppression at 30 kHz
Part 5: Noise Sideband Suppression at 100 kHz (Agilent E4401B and E4411B only)

- For E4401B or E4411B, do Parts 1, 3, 4 and 5.
- For E4402B, E4404B, E4405B or E4407B with Option 1DR and serial prefixes greater than or equal to US4510, SG4510, or MY4510, do Parts 2, 3 and 4.
- For all other ESA series analyzers do Parts 1, 3 and 4.

A worksheet is provided at the end of this procedure for calculating the noise sideband suppression.

Part 1: Noise Sideband Suppression at 10 kHz (measured in 1 kHz RBW)

1. Perform the following steps to set up the equipment:

   Set the synthesized signal generator controls as follows:

   FREQUENCY, **1000 MHz**
   AMPLITUDE, **0 dBm** (50 Ω Input only)
   AMPLITUDE, **6 dBm** (75 Ω Input only)
   AM OFF
   FM OFF

2. Connect the equipment as shown in Figure 2-7.
3. Press **Preset** on the analyzer. Press the **Factory Preset** softkey, if it is displayed. Set the analyzer by pressing the following keys:

   FREQUENCY, **1 GHz**
   SPAN, **10 MHz**
   AMPLITUDE, **Attenuation 10 dB** (Man)

4. Press the following analyzer keys to measure the carrier amplitude:

   Peak Search (or **Search**)
   FREQUENCY, **Signal Track** (On)
   SPAN, **50 kHz**
   BW/Avg, **1 kHz**
   Video BW, **30 Hz** (Man)
   FREQUENCY, **Signal Track** (Off)

ManualsPlus.com

Det/Demod, Detector, Sample
Sweep, Sweep Time, 5 sec
Single

Wait for the completion of a sweep, then press **Peak Search** (or **Search**).

5. Press the following analyzer keys to measure the noise sideband level at 10 kHz:

   Marker, **Delta**
   More, **Function**, **Marker Noise** (or **Noise**)
   AMPLITUDE, –10 dBm
   FREQUENCY, CF Step, 10 kHz
   Center Freq, ↑
   SPAN, Zero Span
   Single

   Record the marker amplitude noise reading in Table 2-10 as the Upper Sideband Noise Level at 10 kHz.

6. Press the following analyzer keys to measure the noise sideband level at –10 kHz:

   FREQUENCY, Center Freq, ↓, ↓
   Single

   Record the marker amplitude noise reading in Table 2-10 as the Lower Sideband Noise Level at –10 kHz.

7. Press **FREQUENCY, Center Freq,** ↑

8. Continue with Part 3: Noise Sideband Suppression at 20 kHz.

Part 2: Noise Sideband Suppression at 10 kHz (measured in 100 Hz RBW)

1. Perform the following steps to set up the equipment:

   Set the synthesized signal generator controls as follows:

   FREQUENCY, **1000 MHz**
   AMPLITUDE, **0 dBm**
   AM, **OFF**
   FM, **OFF**

2. Connect the equipment as shown in Figure 2-7.

3. Press **Preset** on the analyzer. Press the **Factory Preset** softkey, if it is displayed. Set the analyzer by pressing the following keys:

   FREQUENCY, **1 GHz**
   SPAN, **10 MHz**
   AMPLITUDE, **Attenuation 10 dB** (Man)

ManualsPlus.com

4. Press the following analyzer keys to measure the carrier amplitude:

   Peak Search (or **Search**)
   FREQUENCY, **Signal Track** (On)
   SPAN, **50 kHz**
   BW/Avg, **100 Hz**
   Video BW, **30 Hz** (Man)
   FREQUENCY, **Signal Track** (Off)
   Det/Demod, Detector, Sample
   Sweep, Sweep Time, 5 sec
   Single

   Wait for the completion of a sweep, then press **Peak Search** (or **Search**).

5. Press the following analyzer keys to measure the noise sideband level at 10 kHz:

   Marker, **Delta**
   More, **Function**, **Marker Noise** (or **Noise**)
   AMPLITUDE, –10 dBm
   FREQUENCY, CF Step, 10 kHz
   Center Freq, ↑
   SPAN, Zero Span
   Single

   Record the marker amplitude noise reading in Table 2-10 as the Upper Sideband Noise Level at 10 kHz.

6. Press the following analyzer keys to measure the noise sideband level at –10 kHz:

   FREQUENCY, Center Freq, ↓, ↓
   Single

   Record the marker amplitude noise reading in Table 2-10 as the Lower Sideband Noise Level at –10 kHz.

7. Press **Preset** on the analyzer. Press the **Factory Preset** softkey, if it is displayed. Set the analyzer by pressing the following keys:

   FREQUENCY, **1 GHz**
   SPAN, **10 MHz**
   AMPLITUDE, **Attenuation 10 dB** (Man)

8. Press the following analyzer keys to measure the carrier amplitude:

   Peak Search (or **Search**)
   FREQUENCY, **Signal Track** (On)
   SPAN, **50 kHz**
   BW/Avg, **1 kHz**
   Video BW, **30 Hz** (Man)
   FREQUENCY, **Signal Track** (Off)
   Det/Demod, Detector, Sample

ManualsPlus.com

Sweep, Sweep Time, 5 sec
Single

Wait for the completion of a sweep, then press **Peak Search** (or **Search**).

9. Press the following analyzer keys to measure the noise sideband level at 10 kHz:

Marker, **Delta**
More, **Function**, **Marker Noise** (or **Noise**)
AMPLITUDE, –10 dBm

10. Continue with Part 3: Noise Sideband Suppression at 20 kHz

Part 3: Noise Sideband Suppression at 20 kHz

1. Press the following analyzer keys to measure the noise sideband level at 20 kHz:

FREQUENCY, CF Step, 20 kHz
Center Freq, ↑
Single

Record the marker amplitude noise reading in Table 2-10 as the Upper Sideband Noise Level at 20 kHz.

2. Press the following analyzer keys to measure the noise sideband level at –20 kHz:

FREQUENCY, Center Freq, ↓, ↓
Single

Record the marker amplitude noise reading in Table 2-10 as the Lower Sideband Noise Level at –20 kHz.

3. Press ↑.

Part 4: Noise Sideband Suppression at 30 kHz

1. Press the following analyzer keys to measure the noise sideband level at 30 kHz:

FREQUENCY, CF Step, 30 kHz
Center Freq, ↑
Single

Record the marker amplitude noise reading in Table 2-10 as the Upper Sideband Noise Level at 30 kHz.

2. Press the following analyzer keys to measure the noise sideband level at –30 kHz:

ManualsPlus.com

FREQUENCY, ↓, ↓
Single

Record the marker amplitude noise reading in Table 2-10 as the Lower Sideband Noise Level at –30 kHz.

3. Press ↑.
4. If the analyzer is an Agilent E4401B or E4411B, continue with Part 5: Noise Sideband Suppression at 100 kHz (Agilent E4401B and E4411B only). Otherwise, continue with the next step.
5. In Table 2-10, record the more positive values (either Upper Noise Sideband Level, or Lower Noise Sideband Level) at the three offset frequencies and record them in the table as the Worst-Case offsets. Record these Worst-Case offset values in the performance verification test record in locations 1, 2 and 3 respectively.
6. This completes the Noise Sidebands test for the Agilent E4402B, E4403B, E4404B, E4405B, E4407B, and E4408B analyzers.

Part 5: Noise Sideband Suppression at 100 kHz (Agilent E4401B and E4411B only)

1. Press the following analyzer keys to measure the noise sideband level at 100 kHz:

   CF Step, 98 kHz
   Center Freq, ↑
   Single

2. Press **Peak Search** (or **Search**) and record the marker amplitude noise reading in Table 2-10 as the Upper Sideband Noise Level at 100 kHz.

NOTE A spur may exist at 100 kHz offset from the carrier. Measuring at ±98 kHz offset from the carrier will yield a noise sideband level worse than the reading at ±100 kHz offset.

3. Press the following analyzer keys to measure the noise sideband level at –100 kHz:

   FREQUENCY, ↓, ↓
   Single

4. Press **Peak Search** (or **Search**) and record the marker amplitude noise reading in Table 2-10 as the Lower Sideband Noise Level at –100 kHz.
5. In Table 2-10, record the more positive values (either Upper Noise Sideband Level, or Lower Noise Sideband Level) at the four offset frequencies and record them in the table as the Worst-Case offsets. Record these Worst-Case offset values in the performance

ManualsPlus.com

verification test record in locations 1, 2, 3 and 4 respectively.

6. This completes the Noise Sidebands test for the Agilent E4401B or E4411B analyzer.

Table 2-10 Noise Sidebands Worksheet

Offset (kHz)	Noise Sideband Amplitude			
	Upper (dBc/Hz)	**Lower (dBc/Hz)**	**Worst (dBc/Hz)**	**Test Record Entry**
10 kHz				**1)**
20 kHz				**2)**
30 kHz				**3)**
100 kHz[a]				**4)**

a. This offset frequency is tested on Agilent E4402B, E4404B, E4405B, and E4407B analyzers as part of performance test 8. Noise Sidebands - Wide Offsets: Agilent E4402B, E4404B, E4405B and E4407B.

ManualsPlus.com

8. Noise Sidebands - Wide Offsets: Agilent E4402B, E4404B, E4405B and E4407B

A 1 GHz CW signal is applied to the input of the analyzer. The marker functions are used to measure the amplitude of the carrier and the noise level at 100 kHz, 1 MHz, 5 MHz, and 10 MHz above and below the carrier.

There are no related adjustment procedures for this performance test.

Equipment Required

Wide offset phase noise signal generator
Cable, Type-N, 152-cm (60-in)

Additional Equipment for Option BAB

Adapter, Type-N (f), to APC 3.5 (f)

Figure 2-8 Noise Sidebands Test Setup

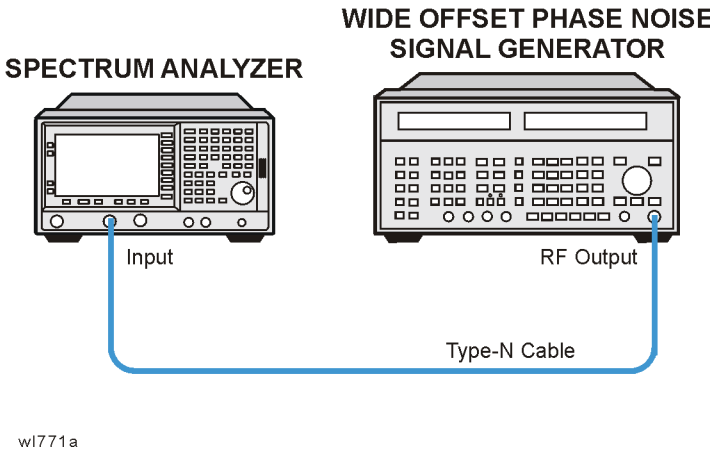

Procedure

This performance test consists of four parts:

Part 1: Noise Sideband Suppression at 100 kHz
Part 2: Noise Sideband Suppression at 1 MHz
Part 3: Noise Sideband Suppression at 5 MHz
Part 4: Noise Sideband Suppression at 10 MHz

Perform part 1 before performing parts 2-4 of this procedure.

A worksheet is provided at the end of this procedure for calculating the

ManualsPlus.com

noise sideband suppression.

Part 1: Noise Sideband Suppression at 100 kHz

1. Perform the following steps to set up the equipment:

   Set the synthesized signal generator controls as follows:

   FREQUENCY, **1 GHz**
   AMPLITUDE, **0 dBm**
   AM OFF
   FM OFF

2. Connect the equipment as shown in Figure 2-8.

3. Press **Preset** on the analyzer. Press the **Factory Preset** softkey, if it is displayed. Press the following keys on the analyzer:

   FREQUENCY, **1 GHz**
   SPAN, **1 MHz**

4. Press the following analyzer keys to measure the carrier amplitude:

   Peak Search (or **Search**)
   FREQUENCY, **Signal Track** (On)
   SPAN, **10 kHz**
   FREQUENCY, **Signal Track** (Off)
   Det/Demod, Detector, Sample
   BW/Avg, **1 kHz**

5. Adjust the signal generator **AMPLITUDE** to place the signal peak within 0.5 dB of the reference level on the analyzer. Press Single and then press **Peak Search** (or **Search**).

6. Press the following analyzer keys:

   Marker, **Delta**
   More, **Function**, **Marker Noise** (or **Noise**)
   AMPLITUDE, –40 dBm
   SPAN, Zero Span

7. Press **BW/Avg, Average On 10, Enter** to set the analyzer to video average 10 sweeps.

8. Press the following analyzer keys to measure the noise sideband level at 100 kHz:

   FREQUENCY, CF Step, 99.8 kHz
   Center Freq, ↑
   Single

   Wait for the analyzer to average ten sweeps.

9. Press **Peak Search** (or **Search**) and record the marker amplitude noise reading in Table 2-11 as the Upper Sideband Noise Level at 100 kHz.

ManualsPlus.com

NOTE A spur may exist at 100 kHz offset from the carrier. Measuring at ±98 kHz offset from the carrier will yield a noise sideband level worse than the reading at ±100 kHz offset.

Press the following analyzer keys to measure the noise sideband level at –100 kHz:

FREQUENCY, ↓, ↓
Single

Wait for the analyzer to average ten sweeps.

10. Press **Peak Search** (or **Search**) and record the marker amplitude noise reading in Table 2-11 as the Lower Sideband Noise Level at –100 kHz.
11. Press ↑.

Part 2: Noise Sideband Suppression at 1 MHz

1. Press the following analyzer keys to measure the noise sideband level at 1 MHz:

   FREQUENCY, CF Step, 980 kHz
   Center Freq, ↑
   Single

   Wait for the analyzer to average ten sweeps.

2. Press **Peak Search** (or **Search**) and record the marker amplitude noise reading in Table 2-11 as the Upper Sideband Noise Level at 1 MHz.

NOTE A spur may exist at 1 MHz offset from the carrier. Measuring at ±980 kHz offset from the carrier will yield a noise sideband level worse than the reading at ±1 MHz offset.

Press the following analyzer keys to measure the noise sideband level at –1 MHz:

FREQUENCY, ↓, ↓
Single

Wait for the analyzer to average ten sweeps.

3. Press **Peak Search** (or **Search**) and record the marker amplitude noise reading in Table 2-11 as the Lower Sideband Noise Level at –1 MHz.
4. Press ↑.

ManualsPlus.com

Part 3: Noise Sideband Suppression at 5 MHz

1. Press the following analyzer keys to measure the noise sideband level at 5 MHz:

   FREQUENCY, CF Step, 5 MHz
   Center Freq, ↑
   Single

   Wait for the analyzer to average ten sweeps.

2. Press **Peak Search** (or **Search**) and record the marker amplitude noise reading in Table 2-11 as the Upper Sideband Noise Level at 5 MHz.

3. Press the following analyzer keys to measure the noise sideband level at –5 MHz:

   FREQUENCY, ↓, ↓
   Single

   Wait for the analyzer to average ten sweeps.

4. Press **Peak Search** (or **Search**) and record the marker amplitude noise reading in Table 2-11 as the Lower Sideband Noise Level at –5 MHz.

5. Press ↑.

Part 4: Noise Sideband Suppression at 10 MHz

1. Press the following analyzer keys to measure the noise sideband level at 10 MHz:

   FREQUENCY, CF Step, 9.99 MHz
   Center Freq, ↑
   Single

   Wait for the analyzer to average ten sweeps.

2. Press **Peak Search** (or **Search**) and record the marker amplitude noise reading in Table 2-11 as the Upper Sideband Noise Level at 10 MHz.

NOTE A spur may exist at 10 MHz offset from the carrier. Measuring at ±9.99 MHz offset from the carrier will yield a noise sideband level worse than the reading at ±10 MHz offset.

   Press the following analyzer keys to measure the noise sideband level at –10 MHz:

   FREQUENCY, ↓, ↓
   Single

   Wait for the analyzer to average ten sweeps.

3. Press **Peak Search** (or **Search**) and record the marker amplitude noise

ManualsPlus.com

reading in Table 2-11 as the Lower Sideband Noise Level at –10 MHz.

4. In Table 2-11, record the more positive values (either Upper Noise Sideband Level, or Lower Noise Sideband Level) at the four offset frequencies and record them in the table as the Worst-Case offsets. Record these Worst-Case offset values in the performance verification test record in locations 1, 2, 3 and 4 respectively.

Table 2-11 Noise Sidebands Worksheet

Offset (kHz)	Noise Sideband Amplitude			
	Upper (dBc/Hz)	**Lower (dBc/Hz)**	**Worst (dBc/Hz)**	**Test Record Entry**
100 kHz				**1)**
1 MHz				**2)**
5 MHz				**3)**
10 MHz				**4)**

ManualsPlus.com

9. System-Related Sidebands

A 500 MHz CW signal is applied to the input of the analyzer. The marker functions are used to measure the amplitude of the carrier and the amplitude of any system-related sidebands more than 30 kHz away from the carrier. System-related sidebands are any internally generated sidebands related to the line, power supply or local oscillator.

There are no related adjustment procedures for this performance test.

Equipment Required

Synthesized signal generator
Cable, Type-N, 152-cm (60-in)

Additional Equipment for 75 Ω Input

Pad, minimum loss
Adapter, Type-N (f), to BNC (m), 75 Ω

Additional Equipment for Option BAB

Adapter, Type-N (f), to APC 3.5 (f)

Figure 2-9 System-related Sidebands Test Setup

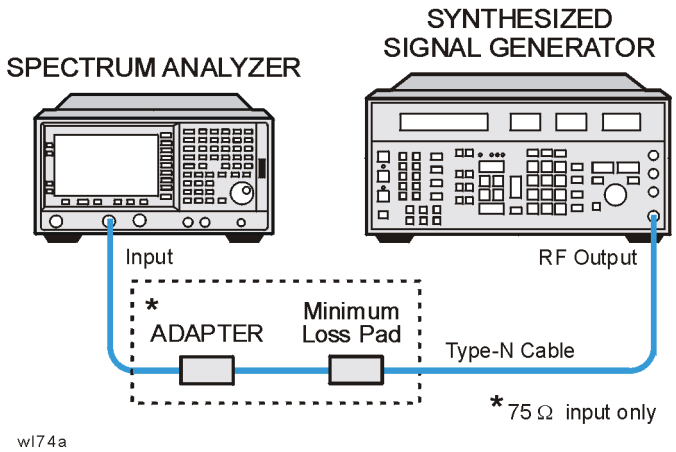

CAUTION Use only 75 Ω cables, connectors, or adapters on instruments with 75 Ω connectors, or the connectors will be damaged.

Procedure

1. Perform the following steps to set up the equipment:

ManualsPlus.com

a. Set the synthesized signal generator controls as follows:

FREQUENCY, **500 MHz**
AMPLITUDE, **0 dBm** (50 Ω Input only)
AMPLITUDE, **6 dBm (75** Ω *Input only)*
AM Off
FM Off

b. Connect the equipment as shown in Figure 2-9.

c. Press **Preset** on the analyzer. Press the **Factory Preset** softkey, if it is displayed. Set the analyzer by pressing the following keys:

FREQUENCY, **500 MHz**
SPAN, **10 MHz**

2. Set the analyzer to measure the system-related sideband above the signal by performing the following steps:

a. Press the following keys:

Peak Search (or **Search**)
FREQUENCY, **Signal Track** (On)
SPAN, **200 kHz**
BW/Avg, **1 kHz**
Video BW, **30 Hz** (Man)

Allow the analyzer to take two complete sweeps. Then press the following keys:

FREQUENCY, **Signal Track** (Off)
CF Step, **130 kHz** (Man)

b. Press **Single** and wait for the completion of the sweep. Press **Peak Search** (or **Search**), then **Marker, Delta**.

c. Press the following keys:

FREQUENCY
↑(step-up key)

3. Measure the system-related sideband above the signal by pressing **Single** on the analyzer. Wait for the completion of a new sweep, then press **Peak Search** (or **Search**).

4. Record the marker delta amplitude as Test Record entry 1 of the performance verification test record.

5. Set the analyzer to measure the system-related sideband below the signal by pressing the following keys:

FREQUENCY
↓ (step-down key)
↓ (step-down key)

6. Measure the system-related sideband below the signal by pressing

ManualsPlus.com

Single. Wait for the completion of a new sweep, then press **Peak Search** (or **Search**).

Record the marker delta amplitude as Test Record entry 2 of the performance verification test record.

ManualsPlus.com

10. Residual FM

This test measures the inherent short-term instability of the analyzer LO system. With the analyzer in zero span, a stable signal is applied to the input and slope detected on the linear portion of the IF bandwidth filter skirt. Any instability in the LO transfers to the IF signal in the mixing process. The test determines the slope of the IF filter in Hz/dB and then measures the signal amplitude variation caused by the residual FM. Multiplying these two values yields the residual FM in Hz.

For instruments having Option 1DR (Narrow Bandwidths), since the 10 Hz resolution bandwidth filter is digitally implemented, its slope is well known. The measured amplitude variation is simply multiplied by the known slope to yield the residual FM in a 10 Hz resolution bandwidth.

There are no related adjustment procedures for this performance test.

Equipment Required

Synthesized signal generator
Cable, Type-N, 152-cm (60-in)

Additional Equipment for 75 Ω Input

Pad, minimum loss
Adapter, Type-N (f), to BNC (m), 75 Ω

Additional Equipment for Option BAB

Adapter, Type-N (f), to APC 3.5 (f)

Figure 2-10 Residual FM Test Setup

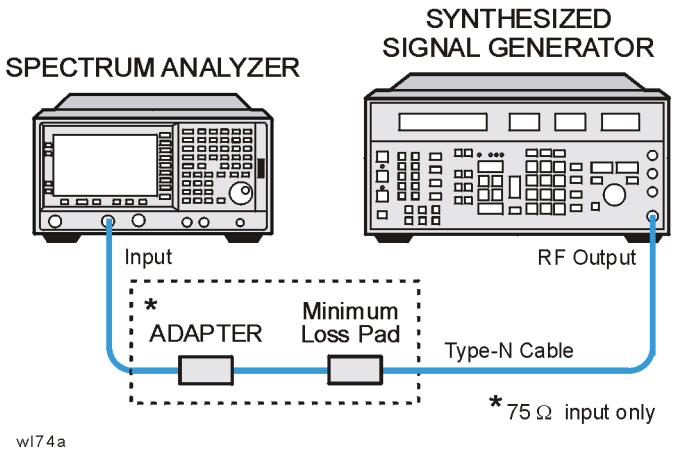

ManualsPlus.com

CAUTION Use only 75 Ω cables, connectors, or adapters on instruments with 75 Ω connectors, or the connectors will be damaged.

Procedure

This performance test consists of two parts:

"Part 1: Residual FM"
"Part 2: Residual FM for Option 1DR and 1D5"

Perform "Part 2: Residual FM for Option 1DR and 1D5" in addition to Part 1, only if your analyzer is equipped with Option 1DR and 1D5.

Part 1: Residual FM

Determining the IF Filter Slope

1. Connect the equipment as shown in Figure 2-10.
2. Set the synthesized signal generator controls as follows:

   FREQUENCY, **1000 MHz**
   AMPLITUDE, **–10 dBm** (50 Ω *Input only)*
   AMPLITUDE, **–4 dBm** (75 Ω *Input only)*
   AM OFF
   FM OFF

3. Press **Preset** on the analyzer. Press the **Factory Preset** softkey, if it is displayed. Set the analyzer by pressing the following keys:

   FREQUENCY, **Center Freq, 1 GHz**
   SPAN, **1 MHz**
   AMPLITUDE, **Ref Level**, **–9 dBm** (50 Ω *Input only)*
   AMPLITUDE, **39.8 dBmV** (75 Ω *Input only)*
   Scale/Div, **2 dB**
   BW/Avg, **Res BW, 1 kHz**

4. On the analyzer, press the following keys:

   Peak Search (or **Search**)
   SPAN, **Span Zoom**, **5 kHz**

   Wait for the `Span 5kHz` message to appear, then press:

   Peak Search (or **Search**), **Marker →**, **Marker → Ref Lvl, Marker**, **Off**

5. On the analyzer, press the following keys:

   Single (Wait for the sweep to finish)
   Peak Search (or **Search**)
   Meas Tools, **Delta**

6. On the analyzer, rotate knob counterclockwise until the marker

ManualsPlus.com

delta (Δ `Mkr1`) amplitude reads –8 dB ±0.3 dB.

7. Press **Delta**, then rotate the knob counterclockwise until the marker delta (Δ `Mkr1`) reads –4 dB ±0.3 dB.

   If you have difficulty achieving the ±0.3 dB setting, then make the following analyzer settings:

   Sweep, **Sweep** (Cont)
   SPAN, **2 kHz**
   BW/Avg, **Video BW**, **30 Hz** (Man)
   Repeat step 5 through step 7.

8. Divide the marker delta (Δ `Mkr1`) frequency in Hertz by the marker delta (Δ `Mkr1`) amplitude in dB to obtain the slope of the resolution bandwidth filter. For example, if the marker delta (Δ `Mkr1`) frequency is 275 Hz and the marker delta (Δ `Mkr1`) amplitude is 3.92 dB, the slope would be equal to 70.15 Hz/dB. Record the result below:

   Slope _____ Hz/ dB

Measuring the Residual FM

9. On the analyzer, press:

   Marker, **Off**
   Peak Search (or **Search**)
   Meas Tools
   Delta

10. Rotate the knob counterclockwise until the marker delta (Δ `Mkr1`) amplitude reads –10 dB ±0.3 dB.

11. On the analyzer, press the following keys:

   Marker, **Normal**
   Marker →, **Mkr** → **CF**
   Single
   BW/Avg, **Video BW (Man)**, **1 kHz**
   SPAN, **Zero Span**
   Sweep, **Sweep Time**
   100 ms, **Single**

   The displayed trace should be about five divisions below the reference level. If it is not, press **Sweep**, **Sweep** (Cont), **FREQUENCY**, and use the knob to place the displayed trace about five divisions below the reference level. Press **Single**.

12. On the analyzer, press **Peak Search** (or **Search**), **Pk-Pk Search**. Read the marker delta (Δ `Mkr1`) amplitude, take its absolute value, and record the result as the Deviation.

   Deviation _____ dB

13. Calculate the Residual FM by multiplying the Slope recorded in

ManualsPlus.com

step 8 by the Deviation recorded in step 12.

Record this value as Test Record entry 1 (Residual FM, 1 kHz Res BW) in the performance verification test record.

Part 2: Residual FM for Option 1DR and 1D5

Perform this additional procedure only if Option 1DR and Option 1D5 are present. Perform "Part 1: Residual FM" before performing this procedure.

1. Press **Preset** on the analyzer. Press the **Factory Preset** softkey, if it is displayed. Set the analyzer by pressing the following keys:

   FREQUENCY, **Center Freq**, **1 GHz**
   SPAN, **1 MHz**
   AMPLITUDE, **Ref Level**, **–9 dBm** (50 Ω *Input only)*
   AMPLITUDE, **Ref Level, 39.8 dBmV** (75 Ω *Input only)*
   Scale/Div, **2 dB**

2. On the analyzer press the following keys:

   Peak Search (or **Search**)
   SPAN, **Span Zoom**, **5 kHz**

   Wait for the "`Span 5 kHz`" message to appear. Press the following keys:

   BW/Avg, Res BW, 10 Hz (Man)
   SPAN, **100 Hz**

3. On the analyzer, press the following keys:

   Peak Search (or **Search**)
   Marker →, Mkr → Ref Lvl
   Marker, **Off**
   Peak Search (or **Search**)
   Meas Tools
   Delta

4. On the analyzer, rotate the knob counterclockwise until the marker delta (Δ `Mkr1`) amplitude reads –10 dB ±0.3 dB.

5. On the analyzer, press the following keys:

   Marker, **Normal**
   Marker →, **Mkr → CF**
   Single
   BW/Avg, **Video BW**, **10 Hz** (Man)
   SPAN, **Zero Span**
   Sweep, **Sweep Time, 20 ms**
   Single

   The displayed trace should be about five divisions below the

ManualsPlus.com

reference level. If it is not, press **Sweep**, **Sweep** (Cont), **FREQUENCY,** and use the knob to place the displayed trace about five divisions below the reference level. Press **Single**.

6. On the analyzer, press **Peak Search** (or **Search**), **Pk-Pk Search**. Read the marker delta (Δ `Mkr1`) amplitude, take its absolute value, and record the result as the Deviation.

   Deviation _____ dB

7. Calculate the Residual FM by multiplying the deviation recorded in step 6 by 0.426 Hz/dB. This is the slope of the 10 Hz Res BW filter at 10 dB below the peak of the filter.

   Record this value as Test Record entry 2 (Residual FM (10 Hz RBW)) in the performance verification test record.

ManualsPlus.com

11. Sweep Time Accuracy

This test uses a function generator to amplitude-modulate a 500 MHz CW signal from another signal generator. The analyzer demodulates this signal in zero span to display the response in the time domain. The marker Δ function on the analyzer is used to read out the sweep time accuracy.

If the analyzer is equipped with Option AYX, also perform “Fast Time Domain Amplitude Accuracy” in addition to this procedure.

There are no related adjustment procedures for this performance test.

Equipment Required

Function generator
Synthesized signal generator
Cable, Type-N, 152-cm (60-in)
Cable, BNC, 120-cm (48-in)

Additional Equipment for 75 Ω Input

Pad, minimum loss
Adapter, Type-N (f), to BNC (m), 75 Ω

Additional Equipment for Option BAB

Adapter, Type-N (f), to APC 3.5 (f)

Figure 2-11 Sweep Time Accuracy Test Setup

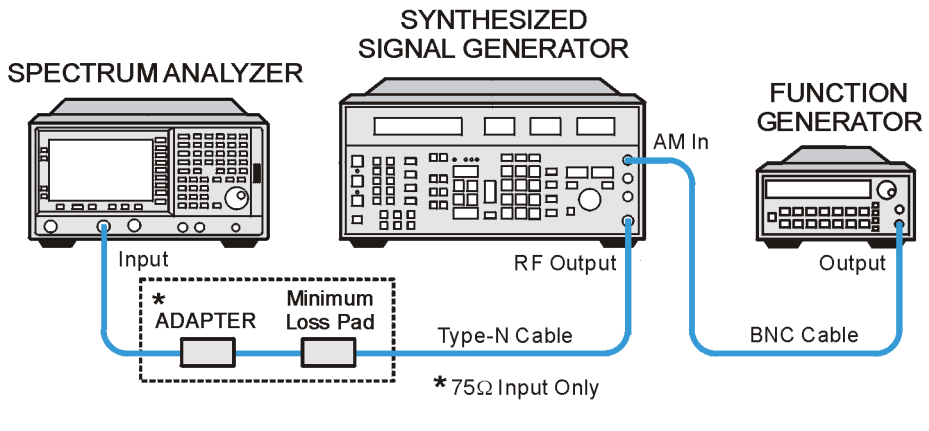

CAUTION Use only 75 Ω cables, connectors, or adapters on instruments with 75 Ω

ManualsPlus.com

connectors, or the connectors will be damaged.

Procedure

1. Set the synthesized signal generator to output a 500 MHz, –10 dBm, CW signal. Set the AM and FM controls to off.

   75 Ω *Input only: Set output level to –4 dBm*.

2. Set the function generator to output a 2 kHz, 1.14 Vp-p triangle waveform signal.
3. Connect the equipment as shown in Figure 2-11.
4. Press **Preset** on the analyzer. Press the **Factory Preset** softkey, if it is displayed. Set the analyzer by pressing the following keys:

   FREQUENCY, **500 MHz**
   SPAN, 10 MHz
   SPAN, **Span Zoom**, **50 kHz**

5. Wait for the `Span 50 kHz` message to appear. Set **Signal Track** (Off).
6. Set the span to 0 Hz and set the analyzer as follows:

   BW/Avg, Res BW, **3 MHz**
   Sweep, Sweep Time, 5 ms
   AMPLITUDE, Scale Type (Lin)
   Peak Search (or **Search**)
   More, **Search Parameters (or Search Criteria)**
   Peak Excursion, **3 dB**

   Adjust the synthesized signal generator amplitude as necessary for a mid-screen display (marker amplitude should read approximately 110 mV).

7. Set the synthesized signal generator modulation source to EXT DC. Set AM ON at 90% modulation.
8. On the analyzer, press **Trig** then **Video**. Set the video trigger level to 110 mV (mid-screen).
9. On the analyzer, press **Single**. After the completion of the sweep, press **Peak Search** (or **Search**), **0, s, Meas Tools**, **Next Pk Right**. This is the marked signal.
10. Press **Marker, Delta**, then **Peak Search** (or **Search**) and press **Next Pk Right** eight times so the delta marker is on the eighth signal peak from the marked signal.
11. Read the marker delta (Δ `Mkr1`) time. Calculate the sweeptime

ManualsPlus.com

accuracy as follows:

$$\text{Sweep Time Accuracy} = 100 \times \frac{\Delta\text{Mkr1} - (0.8 \times \text{Sweep Time})}{\text{Sweep Time}}$$

NOTE The sweep time accuracy is defined as a percentage of the indicated sweep time, not of the indicated signal separation. Therefore, it is appropriate to divide the difference between the marker delta (Δ `Mkr1`) reading and the nominal signal separation by the sweep time, rather than dividing by the nominal signal separation.

12. Record the calculated sweeptime accuracy in Table 2-12.
13. If the analyzer is not equipped with Option AYX, fast time domain sweeps, or Option B7D, DSP and Fast ADC, repeat step 9 through step 12 only for sweeptime settings between 5 ms and 10 s as indicated in Table 2-12. For each sweeptime setting, set the function generator to the frequency indicated in Table 2-12.
14. If the analyzer is equipped with Option AYX, fast time domain sweeps, or Option B7D, DSP and Fast ADC, repeat step 9 through step 12 for all sweeptime settings as indicated in Table 2-12. For each sweeptime setting, set the function generator to the frequency indicated in Table 2-12.

Table 2-12 Sweep Time Accuracy

Analyzer Sweep Time Setting	Synthesizer Function Generator Frequency	Marker Delta (Δ `Mkr1`) Reading	Sweep Time Accuracy (%)	Test Record Entry
5 ms	2.0 kHz			1)
20 ms	500.0 Hz			2)
100 ms	100.0 Hz			3)
1 s	10.0 Hz			4)
10 s	1.0 Hz			5)
The following entries only apply to analyzers equipped with Option AYX or B7D.				
1 ms	10.0 kHz			6)
500 µs	20.0 kHz			7)
100 µs	100.0 kHz			8)

ManualsPlus.com

12. Display Scale Fidelity

A 50 MHz CW signal is applied to the input of the analyzer through two calibrated step attenuators. The attenuators are the amplitude reference standard. The source is adjusted for a response at the reference level. The attenuators are then set to achieve a nominal amplitude below the reference level. The analyzer amplitude marker is compared to the actual total attenuation to determine the scale fidelity error.

The test is performed in both log and linear amplitude scales.

The related adjustment for this performance test is “IF Amplitude.”

Equipment Required

Synthesized signal generator
1 dB step attenuator
10 dB step attenuator
6 dB fixed attenuator (*2 required*)
Attenuator switch driver (if programmable step attenuators are used)
Cable, Type-N 152-cm (60-in) (*2 required*)
Cable, BNC 122-cm (48-in)
Attenuator interconnect kit

Additional Equipment for 75 Ω Input

50 Ω to 75 Ω minimum loss pad
Adapter, Type-N (f), to BNC (m), 75 Ω

Additional Equipment for Option BAB

Adapter, Type-N (f), to APC 3.5 (f)

ManualsPlus.com

Figure 2-12 Scale Fidelity Test Setup

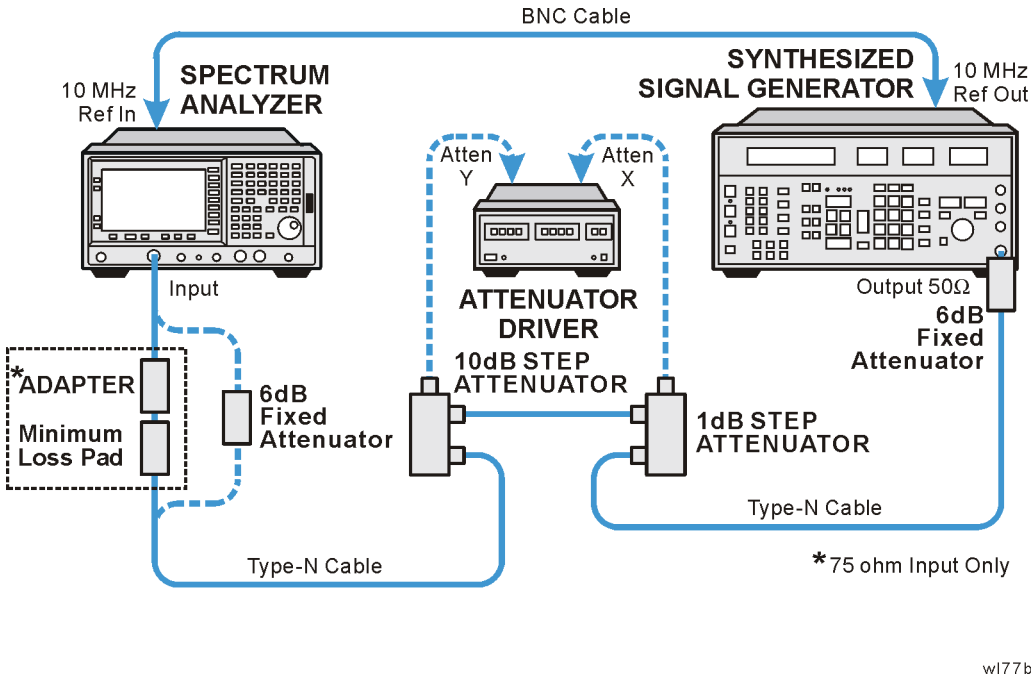

CAUTION Use only 75 Ω cables, connectors, and adapters on instruments with 75 Ω connectors, or the connectors will be damaged.

Procedure

Calculate the Actual Attenuation Errors

1. From the calibration data supplied with the 10 dB step attenuator, enter into Column 4 of Table 2-13 through Table 2-17 the actual attenuation for the corresponding nominal attenuation settings. Enter data in Table 2-14, Table 2-16, and Table 2-17 only if the analyzer has Option 1DR.

   If the calibration data does not indicate an actual attenuation value for the 0 dB setting, enter 0 dB.

NOTE The Agilent 8496G programmable attenuator has four attenuator sections consisting of 10 dB, 20 dB, and 40 dB attenuators. If using the Agilent 8496G programmable attenuator, enter the calibration data for the section three, 40 dB step, rather than the section four, 40 dB step.

2. From the calibration data supplied with the 1 dB step attenuator, enter into Column 5 of Table 2-13 through Table 2-17 the actual attenuation for the corresponding nominal attenuation settings. Enter data in Table 2-14, Table 2-16, and Table 2-17 only if the analyzer has Option 1DR.

ManualsPlus.com

If the calibration data does not indicate an actual attenuation value for the 0 dB setting, enter 0 dB.

NOTE The Agilent 8494G programmable attenuator has four attenuator sections consisting of 1 dB, 2 dB, 4 dB, and 4 dB attenuators. If using the Agilent 8494G programmable attenuator, enter the calibration data for the section three, 4 dB step, rather than the section four, 4 dB step.

3. For each row in Table 2-13 and Table 2-14, add the 10 dB and the 1 dB Step Attenuator Actual Attenuation values (Columns 4 and 5) and place the results into the Total Actual Attenuation (Column 6).

   Total Actual Attenuation = 1 dB Step Attenuator Actual Attenuation
   + 10 dB Step Attenuator Actual Attenuation

   Example for –36 dB from REF LVL setting:

   1 dB Step Attenuator Actual Attenuation (6 dB) = 5.998 dB

   10dB Step Attenuator Actual Attenuation (30 dB) = 30.012 dB

   Total Actual Attenuation = 5.998dB + 30.012 dB = 36.010 dB

4. Enter the total actual attenuation (0 dB from the reference level) below:

   Total actual attenuation (0 dB from Ref Level) = _____ dB

Part 1: Log Display Scale Fidelity, Analog Bandwidths

Setup for Log Scale Measurement

1. Connect the equipment as indicated in Figure 2-12.
2. Press **Preset** on the analyzer. Press the **Factory Preset** softkey, if it is displayed. Set the analyzer by pressing the following keys:

   System, Alignments, Auto Align, Off
   FREQUENCY, 50 MHz
   SPAN, 45 kHz
   BW/Avg, 3 kHz
   BW/Avg, Video BW, 1 kHz

3. **Preset** the synthesized signal generator, then press **Blue Key, Special, 0.0**. Press the following keys:

   FREQUENCY, 50 MHz
   AMPLITUDE, +9 dBm

4. Set the 1 dB step attenuator to 0 dB.
5. Set the 10 dB step attenuator to 0 dB.

ManualsPlus.com

6. Press **Peak Search** (or **Search**) on the analyzer.
7. Adjust the synthesized signal generator amplitude until the analyzer marker amplitude reads 0 dBm±0.1 dB.

   75 Ω Input: Adjust the synthesized signal generator amplitude until the analyzer marker reads 48.75 dBmV ±±0.1 dB.

NOTE Do not adjust the synthesized signal generator amplitude after the reference is established.

8. On the analyzer, press **Marker**, **Delta**.

Measure the Cumulative Log Fidelity

1. Perform step 2 to step 4 for each measurement value in Table 2-13.
2. Set the 1 dB and 10 dB step attenuators as indicated in Column 2 and Column 3 of Table 2-13 for the various dB from REF LVL settings.

   For settings of –64 dB and lower, press the following keys:

   BW/Avg, Average (On)
   5, Enter

3. Press **Peak Search** (or **Search**) on the analyzer and record the marker delta (Δ `Mkr1`) reading in Column 7 of Table 2-13.
4. Calculate the Cumulative Log Fidelity Error (CLFE) as follows, and record the result in the performance verification test record as indicated in Column 8 of Table 2-13:

CLFE = Total Actual Attenuation + MkrΔ Reading – Total Actual Atten (0 dB from Ref Level)

Table 2-13 Cumulative and Incremental Log Scale Fidelity Worksheet, Analog Resolution Bandwidths Measured at 3 kHz

Column 1	Column 2	Column 3	Column 4	Column 5	Column 6	Column 7	Column 8	Column 9
dB from REF LVL (dB)	10 dB Step Atten Nominal Attenu-ation (dB)	1 dB Step Atten Nominal Attenu-ation (dB)	10 dB Step Atten Actual Attenu-ation (dB)	1 dB Step Atten Actual Attenu-ation (dB)	Total Actual Attenu-ation (dB)	Marker Delta (Δ `Mkr1`) Reading (dB)	Test Record Entry – CLFE (dB)	Test Record Entry – ILFE (dB)
0 (Ref)	0	0				0 (Ref)	0 (Ref)	NA

ManualsPlus.com

Table 2-13 Cumulative and Incremental Log Scale Fidelity Worksheet, Analog Resolution Bandwidths Measured at 3 kHz

Column 1	Column 2	Column 3	Column 4	Column 5	Column 6	Column 7	Column 8	Column 9
dB from REF LVL (dB)	10 dB Step Atten Nominal Attenu-ation (dB)	1 dB Step Atten Nominal Attenu-ation (dB)	10 dB Step Atten Actual Attenu-ation (dB)	1 dB Step Atten Actual Attenu-ation (dB)	Total Actual Attenu-ation (dB)	Marker Delta (Δ `Mkr1`) Reading (dB)	Test Record Entry – CLFE (dB)	Test Record Entry – ILFE (dB)
–4	0	4					1)	22)
–8	0	8					2)	23)
–12	10	2					3)	24)
–16	10	6					4)	25)
–20	20	0					5)	26)
–24	20	4					6)	27)
–28	20	8					7)	28)
–32	30	2					8)	29)
–36	30	6					9)	30)
–40	40	0					10)	31)
–44	40	4					11)	32)
–48	40	8					12)	33)
–52	50	2					13)	34)
–56	50	6					14)	35)
–60	60	0					15)	36)
–64	60	4					16)	37)
–68	60	8					17)	38)
–72	70	2					18)	39)
–76	70	6					19)	40)
–80	80	0					20)	41)
–84	80	4					21)	NA

Calculate Incremental Log Fidelity

1. Calculate the Incremental Log Fidelity Error (ILFE) for dB from REF LVL settings of –4 dB to –80 dB using the current and previous Cumulative Log Fidelity Errors (CLFEs):

ManualsPlus.com

ILFE= CLFE(current) – CLFE(previous)

Example Calculation for ILFE at –20 dB from REFLVL setting:

Previous CLFE(–16 dB from REF LVL)= –0.07 dB

Current CLFE(–20 dB from REF LVL) = 0.02 dB

ILFE(–20 dB)= 0.02 dB–(–0.07 dB)= 0.09 dB

2. Record the result in the performance verification test record as indicated in Column 9 of Table 2-13.

Part 2: Log Display Scale Fidelity, Digital Bandwidths

This section is for analyzers with Option 1DR (narrow resolution bandwidths) only.

Setup for Log Scale Measurement

1. Set the following parameters on the analyzer:

   SPAN, 150 Hz
   BW/Avg, 10 Hz (ESA-E Series only)
   BW/Avg, 100 Hz (ESA-L Series only)
   BW/Avg, Video BW, 3 Hz

2. Press **Peak Search** (or **Search**) on the analyzer.
3. Adjust the amplitude of the synthesized signal generator until the analyzer marker amplitude reads 0 dBm ±0.1 dB.

   75 Ω Input only: Adjust the amplitude of the synthesized signal generator until the analyzer marker amplitude reads 48.75 dBmV ±0.1 dB.

4. Set the 1 dB and the 10 dB step attenuators to 0 dB.

NOTE Do not adjust the synthesized signal generator amplitude after the reference is established.

5. On the analyzer, press **Marker**, **Delta**.

Measure the Cumulative Log Fidelity

1. Perform step 2 to step 4 for each measurement value in Table 2-14.
2. Set the 1 dB and 10 dB step attenuators as indicated in Table 2-14 for the various dB from REF LVL settings.

   For settings of –84 dB and lower, press the following keys:

ManualsPlus.com

BW/Avg, Average (On)
5, Enter

3. Press **Peak Search** (or **Search**) on the analyzer and record the marker delta (Δ `Mkr1`) reading in Column 7 of Table 2-14.

4. Calculate the Cumulative Log Fidelity Error (CLFE) as follows and record the result in the performance verification test record as indicated in Column 8 of Table 2-14:

CLFE = Total Actual Attenuation + MkrΔReading – Total Actual Atten(0 dB from F

Table 2-14 Cumulative and Incremental Log Scale Fidelity Worksheet, Option 1DR Narrow Resolution Bandwidths

Column 1	Column 2	Column 3	Column 4	Column 5	Column 6	Column 7	Column 8	Column 9
dB from REF LVL (dB)	10 dB Step Atten Nominal Attenu-ation (dB)	1 dB Step Atten Nominal Attenu-ation (dB)	10 dB Step Atten Actual Attenu-ation (dB)	1 dB Step Atten Actual Attenu-ation (dB)	Total Actual Attenu-ation (dB)	Marker Delta (Δ `Mkr1`) Reading (dB)	Test Record Entry – CLFE (dB)	Test Record Entry – ILFE (dB)
0 (Ref)	0	0				0 (Ref)	0 (Ref)	NA
–4	0	4					43)	68)
–8	0	8					44)	69)
–12	10	2					45)	70)
–16	10	6					46)	71)
–20	20	0					47)	72)
–24	20	4					48)	73)
–28	20	8					49)	74)
–32	30	2					50)	75)
–36	30	6					51)	76)
–40	40	0					52)	77)
–44	40	4					53)	78)
–48	40	8					54)	79)
–52	50	2					55)	80)
–56	50	6					56)	81)
–60	60	0					57)	82)

ManualsPlus.com

Table 2-14 Cumulative and Incremental Log Scale Fidelity Worksheet, Option 1DR Narrow Resolution Bandwidths

Column 1	Column 2	Column 3	Column 4	Column 5	Column 6	Column 7	Column 8	Column 9
dB from REF LVL (dB)	10 dB Step Atten Nominal Attenu-ation (dB)	1 dB Step Atten Nominal Attenu-ation (dB)	10 dB Step Atten Actual Attenu-ation (dB)	1 dB Step Atten Actual Attenu-ation (dB)	Total Actual Attenu-ation (dB)	Marker Delta (Δ Mkr1) Reading (dB)	Test Record Entry – CLFE (dB)	Test Record Entry – ILFE (dB)
–64	60	4					58)	83)
–68	60	8					59)	84)
–72	70	2					60)	85)
–76	70	6					61)	86)
–80	80	0					62)	87)
–84	80	4					63)	NA
–88	80	8					64)	NA
–92	90	2					65)	NA
–96	90	6					66)	NA
–98	90	8					67)	NA

Calculate incremental log fidelity:

Calculate the Incremental Log Fidelity Error (ILFE) for dB from REF LVL settings of –4 dB to –80 dB using the current and previous Cumulative Log Fidelity Errors (CLFEs):

$$\text{ILFE} = \text{CLFE(current)} - \text{CLFE(previous)}$$

Record the result in the performance verification test record as indicated in Column 9 of Table 2-14.

Part 3: Linear Display Scale Fidelity, Analog Bandwidths

Setup for linear scale measurement:

1. Press **Preset** on the analyzer. Press the **Factory Preset** softkey, if it is displayed. Set the analyzer by pressing the following keys:

   System, Alignments, Auto Align, Off

FREQUENCY, 50 MHz

ManualsPlus.com

SPAN, 10 kHz
BW/Avg, 3 kHz
AMPLITUDE, Scale Type (Lin)
Input/Output (or **Input**), Input Z Corr (50) (*75 Ω Input only*)

2. Preset the synthesized signal generator, by pressing **Blue Key, Special, 0, 0**. Press the following keys:

   FREQUENCY, 50 MHz
   AMPLITUDE, –3 dBm (*50 Ω Input only*)
   AMPLITUDE, 4 dBm *(75 Ω Input only)*

3. Set the 1 dB step attenuator to 0 dB.
4. Set the 10 dB step attenuator to 0 dB.
5. Press **Peak Search** (or **Search**) on the analyzer.
6. Adjust the synthesized signal generator amplitude until the analyzer marker amplitude reads 223.6 mV ±4 mV.

NOTE Do not adjust the amplitude of the synthesized signal generator after the reference is established.

Calculate ideal marker amplitude:

7. Considering Total Actual Attenuation at the 0 dB from REF LVL setting to be ATref, and the Total Actual Attenuation at any other dB from REF LVL setting to be ATmeas, calculate the Ideal Mkr Reading, in millivolts, as follows, and enter the result in Column 7 of Table 2-15.

$$\text{Ideal Mkr Reading}(\text{mV}) = 1000\sqrt{0.05 \times 10^{(-\text{ATmeas} + \text{ATref})/10}}$$

For example, if ATref = 0.012 dB and ATmeas = 7.982, the Ideal Mkr Reading for the –8 dB from Ref Level setting would be:

$$\text{Ideal Mkr Reading}(\text{mV}) = 1000\sqrt{0.05 \times 10^{(-7.982 + 0.012)/10}} = 89.3\ \text{mV}$$

Measure Linear Fidelity:

8. Perform step 9 to step 11 for each measurement value in Table 2-15.
9. Set the 1 dB and 10 dB step attenuators as indicated in Column 2 and Column 3 of Table 2-15 for the dB from REF LVL settings.
10. Press **Peak Search** (or **Search**) on the analyzer and record the marker delta (Δ `Mkr1`) amplitude reading as the actual Mkr reading in Column 8 of

ManualsPlus.com

Table 2-15.

11. Calculate the Linear Fidelity Error (LFE) as a percentage of reference level (RL), and record the result in the performance verification test record as indicated in Column 9 of Table 2-15.

$$\text{LFE}(\%\text{ of RL}) = 100 \times \frac{\text{Actual Mkr Reading} - \text{Ideal Mkr Reading}}{223.6\text{ mV}}$$

Example calculation for LFE(% of RL):

$$\text{Actual Mkr Reading} = 85.0\text{ mV}$$

$$\text{Ideal Mkr Reading} = 89.3\text{ mV}$$

$$\text{LFE}(\%\text{of RL}) = 100 \times \frac{85.0 - 89.3}{223.6}$$

$$\text{LFE}(\%\text{of RL}) = 1.92\%\text{ of RL}$$

Table 2-15 Linear Scale Fidelity Worksheet, Analog Resolution Bandwidths Measured at 3 kHz

Column 1	Column 2	Column 3	Column 4	Column 5	Column 6	Column 7	Column 8	Column 9
dB from REF LVL (dB)	10 dB Step Atten Nominal Attenu-ation (dB)	1 dB Step Atten Nominal Attenu-ation (dB)	10 dB Step Atten Actual Attenu-ation (dB)	1 dB Step Atten Actual Attenu-ation (dB)	Total Actual Attenu-ation (dB)	Ideal Mkr Reading (mV)	Actual Mkr Reading (mV)	Test Record Entry – LFE (% of RL)
0 (Ref)	0	0				0 (Ref)	0 (Ref)	0 (Ref)
–4	0	4						93)
–8	0	8						94)
–12	10	2						95)
–16	10	6						96)
–20	20	0						97)

Part 4: Linear Display Scale Fidelity, Digital Bandwidths

This section is for analyzers with Option 1DR (narrow resolution bandwidths) only.

ManualsPlus.com

Setup for linear scale measurement:

1. Set the following parameters on the analyzer:

   SPAN, 100, Hz (ESA-E Series only)
   SPAN, 300, Hz (ESA-L Series only)
   BW/Avg, 10 Hz (ESA-E Series only)
   BW/Avg, 100 Hz (ESA-L Series only)
   Video BW, 1 Hz

2. Press **Peak Search** (or **Search**) on the analyzer.
3. Set the 1 dB and 10 dB step attenuators to 0 dB.
4. Adjust the synthesized signal generator amplitude until the analyzer marker amplitude reads 223.6 mV ±4 mV.

NOTE Do not adjust the synthesized signal generator amplitude after the reference is established.

Calculate ideal marker amplitude:

5. Considering Total Actual Attenuation at the 0 dB from REF LVL setting to be ATref and the Total Actual Attenuation at any other dB from REF LVL setting to be ATmeas, calculate the Ideal Mkr Reading, in millivolts, as follows and enter the result in Column 7 of Table 2-16.

$$\text{Ideal Mkr Reading}(\text{mV}) = 1000\sqrt{0.05 \times 10^{(-\text{ATmeas} + \text{ATref})/10}}$$

Measure linear fidelity:

6. Perform step 7 to step 9 for each measurement value in Table 2-16.
7. Set the 1 dB and 10 dB step attenuators as indicated in Table 2-16 for the dB from REF LVL settings.
8. Press **Peak Search** (or **Search**) on the analyzer and record the marker delta (Δ `Mkr1`) amplitude reading as the actual Mkr reading in Column 8 of Table 2-16.
9. Calculate the Linear Fidelity Error (LFE) as a percentage of reference level (RL), and record the result in the performance verification test record as indicated in Column 9 of Table 2-16.

$$\text{LFE}(\%\text{of RL}) = 100 \times \frac{\text{Actual Mkr Reading} - \text{Ideal Mkr Reading}}{223.6\ \text{mV}}$$

ManualsPlus.com

Table 2-16 Linear Scale Fidelity Worksheet, Option 1DR Narrow Resolution Bandwidths

Column 1	Column 2	Column 3	Column 4	Column 5	Column 6	Column 7	Column 8	Column 9
dB from REF LVL (dB)	10 dB Step Atten Nominal Attenu-ation (dB)	1 dB Step Atten Nominal Attenu-ation (dB)	10 dB Step Atten Actual Attenu-ation (dB)	1 dB Step Atten Actual Attenu-ation (dB)	Total Actual Attenu-ation (dB)	Ideal Mkr Reading (mV)	Actual Mkr Reading (mV)	Test Record Entry – LFE (% of RL)
0 (Ref)	0	0				0 (Ref)	0 (Ref)	0 (Ref)
–4	0	4						98)
–8	0	8						99)
–12	10	2						100)
–16	10	6						101)
–20	20	0						102)

10. If the analyzer has a 75W Input press:

    Input/Output (or **Input**)
    Input Z Corr (75)

Zero Span Log Fidelity, Digital Bandwidths

This section is for analyzers with Option 1DR (narrow resolution bandwidths) only.

Setup for zero span measurements

11. Set the 1 dB step attenuator to 11 dB and the 10 dB step attenuator to 110 dB.

12. Press **Preset** on the analyzer. Press the **Factory Preset** softkey, if it is displayed. Set the analyzer by pressing the following keys:

    System, Alignments
    Align Now, All (wait for the alignment sequence to complete)

13. Set the 1 dB and 10 dB step attenuators to 0 dB.

14. Set the following parameters on the analyzer:

    FREQUENCY, **50 MHz**
    SPAN, 100 Hz (ESA-E Series only)
    SPAN, 500 Hz (ESA-L Series only)
    BW/Avg, 10 Hz (ESA-E Series only)
    BW/Avg, 100 Hz (ESA-L Series only)

15. On the analyzer press **Peak Search** (or **Search**), **Marker –>**, and **Marker –> CF**.

ManualsPlus.com

16. Press **SPAN, Zero Span** on the analyzer.

17. Adjust the synthesized signal generator amplitude until the analyzer marker amplitude reads 0 dBm ± 0.1 dB.

    75 Ω Input: Adjust the synthesized signal generator amplitude until the analyzer marker amplitude reads 48.75 dBmV ± 0.1 dB.

NOTE Do not adjust the synthesized signal generator amplitude after the reference is established.

18. On the analyzer, press **Marker, Delta**.

Measure the Cumulative Log Fidelity

19. On the analyzer, press **Single, BW/Avg, Average, 5, Enter**.

20. Perform step 22 to step 24 for each measurement value in Table 2-17.

21. Set the 1 dB and 10 dB step attenuators as indicated in Column 2 and Column 3 of Table 2-16 for the various dB from REF LVL settings.

22. Press **Single** and wait for “VAvg 5” to be displayed to the right of the graticule area.

23. Record the marker delta (Δ `Mkr1`) amplitude reading in Column 7 of Table 2-16.

24. Calculate the Cumulative Log Fidelity Error (CLFE) as follows, and record the result in the performance verification test record as indicated in Column 8 of Table 2-16.

    CLFE = Total Actual Attenuation + ΔMkr Reading – Total Actual Atten (0 dB from Ref Level)

ManualsPlus.com

Table 2-17 Zero Span Cumulative Log Fidelity Worksheet, Opt 1DR Narrow Resolution Bandwidths

Column 1	Column 2	Column 3	Column 4	Column 5	Column 6	Column 7	Column 8
dB from REF LVL (dB)	10 dB Step Atten Nominal Attenu-ation (dB)	1 dB Step Atten Nominal Attenu-ation (dB)	10 dB Step Atten Actual Attenu-ation (dB)	1 dB Step Atten Actual Attenu-ation (dB)	Total Actual Attenu-ation (dB)	DMkr Reading (dB)	Test Record Entry-CLFE (dB)
0 (Ref)	0	0				0 (Ref)	0 (Ref)
–4	0	4					103)
–8	0	8					104)
–12	10	2					105)
–16	10	6					106)
–20	20	0					107)
–24	20	4					108)
–28	20	8					109)
–32	30	2					110)
–36	30	6					111)
–40	40	0					112)
–44	40	4					113)
–48	40	8					114)
–52	50	2					115)
–56	50	6					116)
–60	60	0					117)
–64	60	4					118)
–68	60	8					119)
–70	70	0					120)

Post-Test Instrument Restoration

25. Remove the RF cable from the analyzer input connector.

26. On the analyzer, press the following keys:

Preset
System, **Alignments**, **Auto Align**, **All**

ManualsPlus.com

13. Input Attenuation Switching Uncertainty

A 50 MHz CW signal is applied to the input of the analyzer through two calibrated step attenuators. The attenuators are the amplitude reference standard. The source is adjusted for a response at the reference level. The internal attenuators are then varied between settings and the external attenuators are changed accordingly to maintain the same input level at the mixer. The analyzer marker functions are used to measure the amplitude differences. The actual attenuation values of the step attenuators are used to correct the marker amplitude readings yielding the input attenuation switching error.

The related adjustment for this performance test is “Frequency Response.”

Equipment Required

Synthesized signal generator
1 dB step attenuator
10 dB step attenuator
Attenuator switch driver (if programmable step attenuators are used)
6 dB fixed attenuator (*2 required*)
Cable, Type-N 152-cm (60-in) (*2 required*)
Cable, BNC 122-cm (48-in)
Attenuator interconnect kit

Additional Equipment for 75 Ω Input

50 Ω to 75 Ω minimum loss pad
Adapter, Type-N (f), to BNC (m), 75 Ω

Additional Equipment for Option BAB

Adapter, Type-N (f), to APC 3.5 (f)

ManualsPlus.com

Figure 2-13 Input Attenuator Switching Uncertainty Test Setup

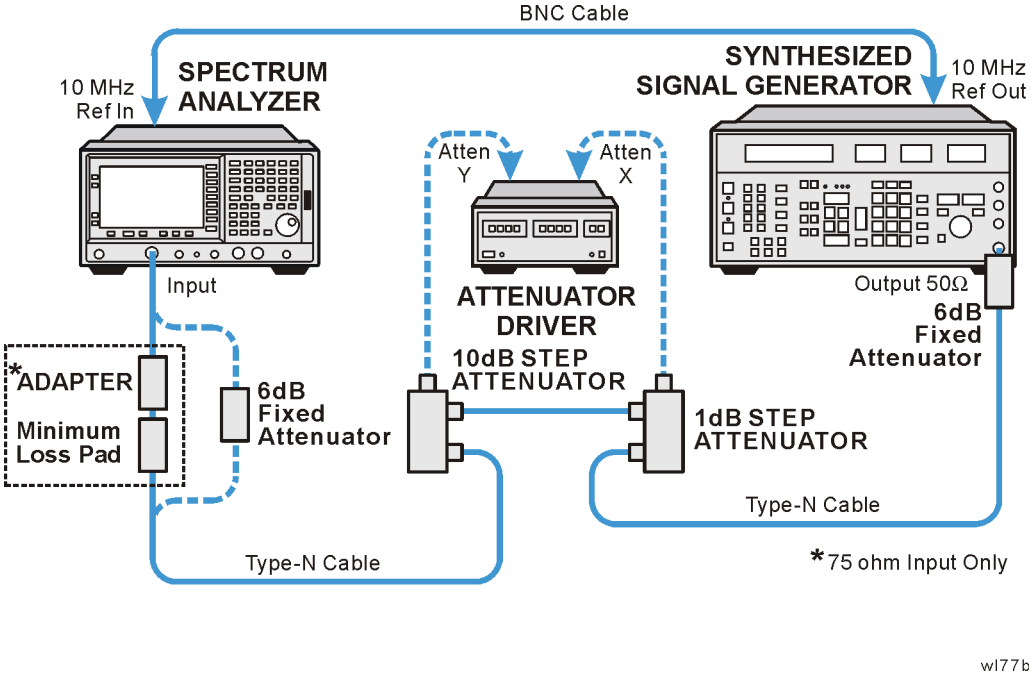

CAUTION Use only 75 Ω cables, connectors, or adapters on instruments with 75 Ω connectors, or the connectors will be damaged.

Procedure

Calculate Actual Attenuation Values

1. From the calibration data supplied with the 1 dB step attenuator, enter into Column 2 of Table 2-18 the actual attenuation for the corresponding nominal attenuation settings. If the calibration data does not indicate an actual attenuation value for the 0 dB setting, enter 0 dB.

NOTE The Agilent 8494G programmable attenuator has four attenuator sections consisting of 1 dB, 2 dB, 4 dB, and 4 dB attenuators. If using the Agilent 8494G programmable attenuator, enter the calibration data for the section three 4 dB step rather than the section four 4 dB step.

2. From the calibration data supplied with the 10 dB step attenuator, enter into Column 4 of Table 2-18 the actual attenuation for the corresponding nominal attenuation settings. If the calibration data does not indicate an actual attenuation value for the 0 dB setting, enter 0 dB.

NOTE The Agilent 8496G programmable attenuator has four attenuator sections consisting of 10 dB, 20 dB, 40 dB, and 40 dB attenuators. If

ManualsPlus.com

using the Agilent 8496G programmable attenuator, enter the calibration data for the section three 40 dB step rather than the section four 40 dB step.

3. For each Total Nominal Attenuation setting indicated in Table 2-18, calculate the Total Actual Attenuation from the actual attenuation Columns for the 1 dB and the 10 dB step attenuators and enter the result into Column 6 of Table 2-18.

   Total Actual Attenuation = 1 dB Step Attenuator Actual Attenuation + 10 dB Step Attenuator Actual Attenuation

   Example for 35 dB total nominal attenuation setting:

   1dB Step Attenuator Actual Attenuation (5 dB) = 5.021 dB

   10 dB Step Attenuator Actual Attenuation (30 dB) = 29.981 dB

   Total Actual Attenuation = 5.998 dB + 30.012 dB = 35.002 dB

Table 2-18 Actual Attenuation Worksheet

Column 1	Column 2	Column 3	Column 4	Column 5	Column 6
1 dB step Attenuator Nominal Attenuation (dB)	**1 dB step Attenuator Actual Attenuation (dB)**	**10 dB step Attenuator Nominal Attenuation (dB)**	**10 dB step Attenuator Actual Attenuation (dB)**	**Total Nominal Atten-uation (dB)**	**Total Actual Atten-uation (dB)**
0		0		0	
5		0		5	
0		10		10	
5		10		15	
0		20		20	
5		20		25	
0		30		30	
5		30		35	
0		40		40	
5		40		45	
0		50		50	
5		50		55	
0		60		60	
5		60		65	

ManualsPlus.com

4. For each attenuation error value in Column 4 of Table 2-19, calculate the attenuation errors by subtracting the difference between the Table 2-18 Total Actual Attenuation and Total Nominal Attenuation from the difference between the Total Actual Attenuation and Total Nominal Attenuation at 55 dB. Note that the total nominal attenuations listed in Table 2-19 are in a different order than those listed in Table 2-18.

   AttenErr = (ActAtten(55 dB) - 55 dB) - (ActAtten(X dB) - NomAtten(X dB))

   Where:

   AttenErr = Attenuator Error between the X dB and 55 dB settings

   ActAtten(55 dB) = Actual Attenuation of the 55 dB setting

   ActAtten(X dB) = Actual Attenuation of the X dB setting

   NomAtten(X dB) = Nominal Attenuation of the X dB setting

   Example of attenuation error calculation for 35 dB nominal attenuation:

   ActAtten (55 dB) = 55.15 dB
   ActAtten (35 dB) = 35.002 dB
   NomAtten (35 dB) = 35 dB

   AttenErr = (55.15 – 55) – (35.002 – 35)
   AttenErr = 0.15 – 0.002
   AttenErr = 0.148 dB

Setup for Switching Uncertainty Measurement

5. Connect the equipment as indicated in Figure 2-13. The 6 dB fixed attenuator (or minimum loss pad for 75 Ω input analyzers) should be connected directly to the input connector of the analyzer.

6. Press **Preset** on the analyzer. Press the **Factory Preset** softkey, if it is displayed. Press **System, Alignments, Auto Align, Off**. Set the controls as follows:

   FREQUENCY, **50 MHz**
   SPAN, **100 kHz**

   AMPLITUDE, –55 dBm (*50 Ω Input only*)
   AMPLITUDE, –6.2 dBmV (*75 Ω Input only*)
   AMPLITUDE, Attenuation, 10 dB
   AMPLITUDE, Scale/Div, 2 dB
   BW/Avg, **30 kHz**
   BW/Avg, **Video BW**, **100 Hz**

ManualsPlus.com

7. Preset the synthesized signal generator (**Blue Key, Special, 0, 0**) and set the controls as follows:

   FREQUENCY, **50 MHz**
   AMPLITUDE, **12 dBm**

8. Set the 1 dB step attenuator to 5 dB attenuation. Set the 10 dB step attenuator to 50 dB. Refer to the Agilent 11713A attenuator switch driver manual for information on manually controlling a programmable step attenuator.

9. Press **Peak Search** (or **Search**) on the analyzer.

10. Adjust the amplitude of the synthesized signal generator until the marker amplitude of the analyzer reads –57 dBm± 0.1 dB.

    75 Ω *Input only: Adjust the amplitude of the synthesized signal generator until the marker of the analyzer reads –8.2 dBmV ± 0.1 dB*.

NOTE Do not adjust the amplitude of the synthesized signal generator after the reference is established.

11. On the analyzer, press **Peak Search** (or **Search**), **Marker**, **Delta**.

Table 2-19 Input Attenuation Switching Uncertainty Worksheet

Column 1	Column 2	Column 3	Column 4	Column 5	Column 6	Column 7
Analyzer Internal Attenu-ation Setting	**Analyzer Reference Level Setting 50 W Input/ 75 W Input**	**Total Nominal Attenu-ation Setting**	**Attenu-ation Error (dB)**	**Ideal Marker Delta Reading**	**Marker Delta Reading (dB)**	**Test Record Entry – Switching Error (dB)**
10 dB	–55 dBm / –6.2 dBmV	55 dB	0	0 dB	0	Ref
0 dB	–65 dBm / –16.2 dBmV	65 dB		–10 dB		1)
5 dB	–60 dBm / –11.2 dBmV	60 dB		–5 dB		2)
15 dB	–50 dBm / –1.2 dBmV	50 dB		5 dB		3)
20 dB	–45 dBm / 3.8 dBmV	45 dB		10 dB		4)
25 dB	–40 dBm / 8.8 dBmV	40 dB		15 dB		5)
30 dB	–35 dBm / 13.8 dBmV	35 dB		20 dB		6)

ManualsPlus.com

Table 2-19 Input Attenuation Switching Uncertainty Worksheet

Column 1	Column 2	Column 3	Column 4	Column 5	Column 6	Column 7
Analyzer Internal Attenu-ation Setting	**Analyzer Reference Level Setting 50 W Input/ 75 W Input**	**Total Nominal Attenu-ation Setting**	**Attenu-ation Error (dB)**	**Ideal Marker Delta Reading**	**Marker Delta Reading (dB)**	**Test Record Entry – Switching Error (dB)**
35 dB	–30 dBm / 18.8 dBmV	30 dB		25 dB		7)
40 dB	–25 dBm / 23.8 dBmV	25 dB		30 dB		8)
45 dB	–20 dBm / 28.8 dBmV	20 dB		35 dB		9)
50 dB	–15 dBm / 33.8 dBmV	15 dB		40 dB		10)
55 dB	–10 dBm / 38.8 dBmV	10 dB		45 dB		11)
60 dB	–5 dBm / 43.8 dBmV	5 dB		50 dB		12)
65 dB[a]	0 dBm / 48.8 dBmV	0 dB		55 dB		13)

a. Does not apply to Agilent E4401B or E4411B.

Measure Switching Uncertainty

Perform step 12 to step 15 for each measurement value in Table 2-19.

12. Set the 1 dB and 10 dB step attenuators to the Total Nominal Attenuation setting value as indicated in Column 3 of Table 2-19 for the various analyzer attenuation settings for each measurement. Table 2-18 may be used as a reference for setting the step attenuators to achieve the desired total nominal attenuation.

13. Similarly, set the corresponding analyzer attenuation and reference level settings as indicated in Column 1 and Column 2 of Table 2-19.

14. Press **Single**, then **Peak Search** (or **Search**) and record the marker amplitude reading as the Marker Delta Reading in Column 6 of Table 2-19.

15. Calculate the Switching Error (Table 2-19, Column 7) by subtracting the Ideal Marker Delta Reading and the Attenuation Error from the Marker Delta Reading. Record the result in the performance verification test record.

ManualsPlus.com

Switching Error = Marker Delta Reading – Ideal Marker Delta Reading – Attenuattic

Example for 25 dB analyzer internal attenuation setting:

Marker Delta Reading = 14.790 dB

Ideal Marker Delta Reading = 15 dB

Attenuation Error = –0.148 dB

Switching Error = 14.790 – 15 – (–0.148) = –0.062 dB

Post-test Instrument Restoration

16. Remove the RF cable from the analyzer input connector.
17. On the analyzer, press **Preset, System, Alignments, Auto Align, All**.

ManualsPlus.com

14. Reference Level Accuracy: Agilent E4401B and E4411B

A 50 MHz CW signal is applied to the 50 Ω input of the analyzer through two step attenuators. The amplitude of the source is decreased in 10 dB steps and the analyzer marker functions are used to measure the amplitude difference between steps. The external attenuator is used as the reference standard. The test is performed in both log and linear amplitude scales.

It is only necessary to test reference levels as low as –90 dBm (–41.25 dBmv for 75 Ω inputs) (with 10 dB internal attenuation) since lower reference levels are a function of the analyzer microprocessor manipulating the trace data. There is no error associated with the trace data manipulation.

The related adjustment for this performance test is “IF Amplitude.”

Equipment Required

Synthesized signal generator
1 dB step attenuator
10 dB step attenuator
6 dB fixed attenuator (*2 required*)
Attenuator switch driver (if programmable step attenuators are used)
Cable, Type-N 152-cm (60-in) (*2 required*)
Cable, BNC 122-cm (48-in)
Attenuator interconnect kit

Additional Equipment for 75 Ω Input

Pad, minimum loss
Adapter, Type-N (f), to BNC (m), 75 Ω

ManualsPlus.com

Procedure

Figure 2-14 Reference Level Accuracy Test Setup

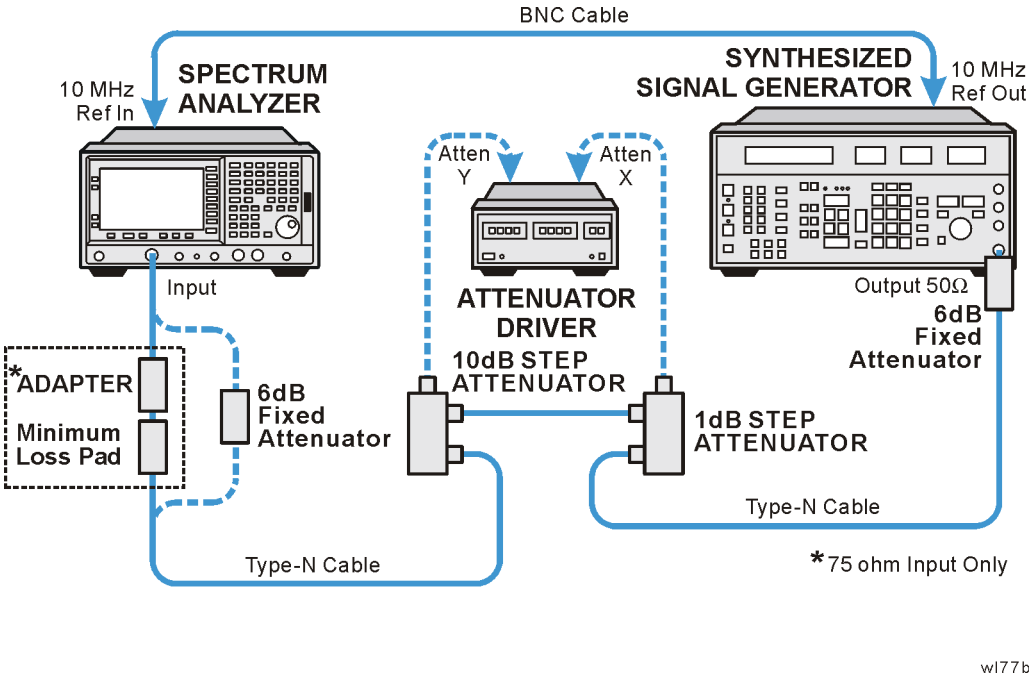

Calculate the Actual Attenuation Errors

1. From the calibration data supplied with the 10 dB step attenuator, enter into Column 2 of Table 2-20 through Table 2-23 the actual attenuation for the corresponding nominal attenuation settings. Enter data into Table 2-21 and Table 2-23 if the analyzer has Option 1DR. If no calibration data is supplied for 0 dB, enter zero.

NOTE The Agilent 8496G programmable attenuator has four attenuator sections consisting of 10 dB, 20 dB, 40 dB and 40 dB attenuators. If using the Agilent 8496G programmable attenuator, enter the calibration data for the section three 40 dB step rather than the section four 40 dB step.

2. To calculate the Actual Attenuation Step, subtract the 10dB Actual Attenuation Error at all settings from the 10dB Actual Attenuation (20 dB) and enter the result in Column 3 of Table 2-20 through Table 2-23. Enter data into Table 2-21 and Table 2-23 if the analyzer has Option 1DR.

Actual Attenuator Step (X dB) = (Actual Attenuation(20 dB) – Actual Attenuation (X dB))

ManualsPlus.com

Example for 50 dB attenuator setting:

$$\text{Actual Attenuation (50 dB)} = 50.08 \text{ dB}$$

$$\text{Actual Attenuation (20 dB)} = 19.85 \text{ dB}$$

$$\text{Actual Attenuator Step (50 dB)} = (19.85 \text{ dB} - 50.08 \text{dB})$$

$$= -30.23 \text{dB}$$

Log Scale, Analog Bandwidths

1. Set the synthesized signal generator controls as follows:

   FREQUENCY, **50 MHz**
   AMPLITUDE, **12 dBm**

2. Connect the equipment as shown in Figure 2-14. Set the 10 dB step attenuator to 20 dB attenuation and the 1 dB step attenuator to 5 dB attenuation.

3. Press **Preset** on the analyzer. Press the **Factory Preset** softkey, if it is displayed. Press **System, Alignments, Auto Align, Off**. Set the analyzer by pressing the following keys:

   FREQUENCY, **50 MHz**
   Attenuation, **10 dB** (Man)
   AMPLITUDE, **–25 dBm** (*50 Ω Input only*)
   AMPLITUDE, **28.75 dBmV** (*75 Ω Input only*)
   Scale/Div, **1 dB**
   SPAN, **50 kHz**
   BW/Avg, **3 kHz**
   Video BW, **30 Hz**

4. Set the 1 dB step attenuator to place the signal peak 1 to 3 dB (1 to 3 divisions) below the reference level.

5. On the analyzer, press the following keys:

   Single
   Peak Search (or **Search**)
   Marker, **Delta**

6. Set the 10 dB step attenuator and analyzer reference level according to Column 1 and Column 4 of Table 2-20. At each setting, do the following:

   a. Press **Single** on the analyzer.

   b. Press **Peak Search** (or **Search**).

   c. Record the marker delta amplitude reading in Column 5 of Table 2-20.

   d. Add the Actual Attenuation Step to the analyzer marker delta

ManualsPlus.com

amplitude and enter the result as the Test Record entry in the performance test record.

The following is an example for –35 dBm reference level:

Analyzer marker Δ amplitude = (–10.17) dB

Actual Attenuator Step (30 dB) = (–10.07) dB

Test Record Entry = (–10.17) dB–(–10.07) dB = (–0.10) dB

ManualsPlus.com

Table 2-20 Log Scale, Analog Bandwidths

Column 1	Column 2	Column 3	Column 4		Column 5	Column 6
10 dB Attenuator Nominal Attenuation (dB)	10 dB Attenuator Actual Attenuation (dB)	Actual Attenuator Step (dB)	Analyzer Reference Level[a] (dBm)	(dBmV)	Analyzer Marker Delta Amplitude (dB)	Test Record Entry
20		0 (Ref)	–25	28.75	0 (Ref)	(Ref)
10			–15	38.75		1)
0			–5	48.75		2)
30			–35	18.75		3)
40			–45	8.75		4)
50			–55	–1.25		5)
60			–65	–11.25		6)
70			–75	–21.25		7)

a. Use the dBm column values for analyzers with a 50 Ω input and the dBmV column for
analyzers with a 75 Ω input.

Log Scale, Digital Bandwidths, Option 1DR

NOTE If the analyzer is an E4401B that is not equipped with Option 1DR (narrow resolution bandwidths) or an E4411B (with or without Option 1DR), skip to the next section (Linear Scale, Analog Bandwidths).

1. On the analyzer, press the following keys:

   SPAN, 150 Hz
   BW/Avg, 10 Hz
   Video BW, 1 Hz

2. Set the 1 dB step attenuator to place the signal peak 1 to 3 dB (1 to 3 divisions) below the reference level.

3. On the analyzer, press the following keys:

   Single
   Peak Search (or **Search**)
   Marker, **Delta**

4. Set the 10 dB step attenuator and analyzer reference level according to Column 1 and Column 4 of Table 2-21. At each setting, do the following:

ManualsPlus.com

a. Press **Single** on the analyzer.

b. Press **Peak Search** (or **Search**).

c. Record the Marker Delta Amplitude reading in Column 5 of Table 2-21.

d. Add the Actual Attenuator Step to the Analyzer Marker Delta Amplitude and enter the result as the Test Record entry in the performance test record.

ManualsPlus.com

Table 2-21 Log Mode, Digital Bandwidths Worksheet, Option 1DR

Column 1	Column 2	Column 3	Column 4		Column 5	Column 6
10 dB Attenuator Nominal Attenuation (dB)	10 dB Attenuator Actual Attenuation (dB)	Actual Attenuator Step (dB)	Analyzer Reference Level[a] (dBm)	(dBmV)	Analyzer Marker Delta Amplitude (dB)	Test Record Entry
20		0 (Ref)	–25	28.75	0 (Ref)	(Ref)
10			–15	38.75		8)
0			–5	48.75		9)
30			–35	18.75		10)
40			–45	8.75		11)
50			–55	–1.25		12)
60			–65	–11.25		13)
70			–75	–21.25		14)

a. Use the dBm column values for analyzers with a 50 Ω input and the dBmV column for analyzers with a 75 Ω input.

Linear Scale, Analog Bandwidths

1. Set the 10 dB step attenuator to 20 dB attenuation.
2. Set the 1 dB step attenuator to 5 dB attenuation.
3. Set the analyzer by pressing the following keys:

   AMPLITUDE, **–25 dBm** (*50 Ω input only*)
   AMPLITUDE, **28.75 dBmV** (*75 Ω input only*)
   AMPLITUDE, Scale Type (Lin)
   AMPLITUDE, **More**, **Y Axis Units** (or **Amptd Units**), **dBm** (*50 Ω input only*)
   AMPLITUDE, **More**, **Y Axis Units** (or **Amptd Units**), **dBmV** (*75 Ω input only*)
   SPAN, **50 kHz**
   BW/Avg, 3 kHz
   Video BW, 30 Hz
   Sweep, Sweep Cont
   Marker, Off

4. Set the 1 dB step attenuator to place the signal peak one to three divisions below the reference level.
5. On the analyzer, press the following keys:

   Single

ManualsPlus.com

Peak Search (or **Search**)
Marker, **Delta**

6. Set the 10 dB step attenuator and analyzer reference level according to Column 1 and Column 4 of Table 2-22. At each setting, do the following:

   a. Press **Single** on the analyzer.

   b. Press **Peak Search** (or **Search**).

   c. Record the marker delta amplitude reading in Column 5 of Table 2-22.

   d. Add the Actual Attenuator Step to the Analyzer Marker Delta Amplitude and enter the result in the performance test record.

ManualsPlus.com

Table 2-22 Linear Mode, Analog Bandwidths Worksheet

Column 1	Column 2	Column 3	Column 4		Column 5	Column 6
10 dB Attenuator Nominal Attenuation (dB)	10 dB Attenuator Actual Attenuation (dB)	Actual Attenuator Step (dB)	Analyzer Reference Level[a] (dBm)	(dBmV)	Analyzer Marker Delta Amplitude (dB)	Test Record Entry
20		0 (Ref)	–25	28.75	0 (Ref)	(Ref)
10			–15	38.75		15)
0			–5	48.75		16)
30			–35	18.75		17)
40			–45	8.75		18)
50			–55	–1.25		19)
60			–65	–11.25		20)
70			–75	–21.25		21)

a. Use the dBm column values for analyzers with a 50 Ω input and the dBmV column for analyzers with a 75 Ω input.

Linear Scale, Digital Bandwidths, Option 1DR

NOTE If the analyzer is an E4401B that is not equipped with Option 1DR (narrow resolution bandwidths) or an E4411B (with or without Option 1DR), continue with the next section (Post-test Instrument Restoration).

1. On the analyzer, press the following keys:

   SPAN, 150 Hz
   BW/Avg, 10 Hz
   Video BW, 1 Hz

2. Set the 1 dB step attenuator to place the signal peak 1 to 3 divisions below the reference level.

3. On the analyzer, press the following keys:

   Single
   Peak Search (or **Search**)
   Marker, **Delta**

4. Set the 10 dB step attenuator and analyzer reference level according to Column 1 and Column 4 of Table 2-23. At each setting, do the following:

ManualsPlus.com

a. Press **Single** on the analyzer.

b. Press **Peak Search** (or **Search**).

c. Record the marker delta amplitude reading in Column 5 of Table 2-23.

d. Add the Actual Attenuator Step to the Analyzer Marker Delta Amplitude and enter the result as the Test Record entry in the performance test record.

Table 2-23 Linear Mode, Digital Bandwidths, Option 1DR

Column 1	Column 2	Column 3	Column 4		Column 5	Column 6
10 dB Attenuator Nominal Attenuation (dB)	10 dB Attenuator Actual Attenuation (dB)	Actual Attenuator Step (dB)	Analyzer Reference Level[a] (dBm)	(dBmV)	Analyzer Marker Delta Amplitude (dB)	Test Record Entry
20		0 (Ref)	–25	28.75	0 (Ref)	(Ref)
10			–15	38.75		22)
0			–5	48.75		23)
30			–35	18.75		24)
40			–45	8.75		25)
50			–55	–1.25		26)
60			–65	–11.25		27)
70			–75	–21.25		28)

a. Use the dBm column values for analyzers with a 50 Ω input and the dBmV column for analyzers with a 75 Ω input.

Post-test Instrument Restoration

1. Remove the RF cable from the analyzer input connector.
2. To restore the default settings on the analyzer, press **Preset, System, Alignments, Auto Align, All**.

ManualsPlus.com

15. Reference Level Accuracy: Agilent E4402B, E4403B, E4404B, E4405B, E4407B, and E4408B.

A 50 MHz CW signal is applied to the 50 Ω Input of the analyzer through two step attenuators. The amplitude of the source is decreased in 10 dB steps and the analyzer marker functions are used to measure the amplitude difference between steps. The external attenuator is used as the reference standard. The test is performed in both log and linear amplitude scales.

It is only necessary to test reference levels as low as –90 dBm (with 10 dB internal attenuation) since lower reference levels are a function of the analyzer microprocessor manipulating the trace data. There is no error associated with the trace data manipulation.

The related adjustment for this performance test is “IF Amplitude.”

Equipment Required

Synthesized signal generator
1 dB step attenuator
10 dB step attenuator
6 dB fixed attenuator (*2 required*)
Attenuator switch driver (if programmable step attenuators are used)
Cable, Type-N 152-cm (60-in) (*2 required*)
Cable, BNC 122-cm (48-in)
Attenuator interconnect kit

Additional Equipment for Option BAB

Adapter, Type-N (f) to APC 3.5 (f)

ManualsPlus.com

Figure 2-15 Reference Level Accuracy Test Setup

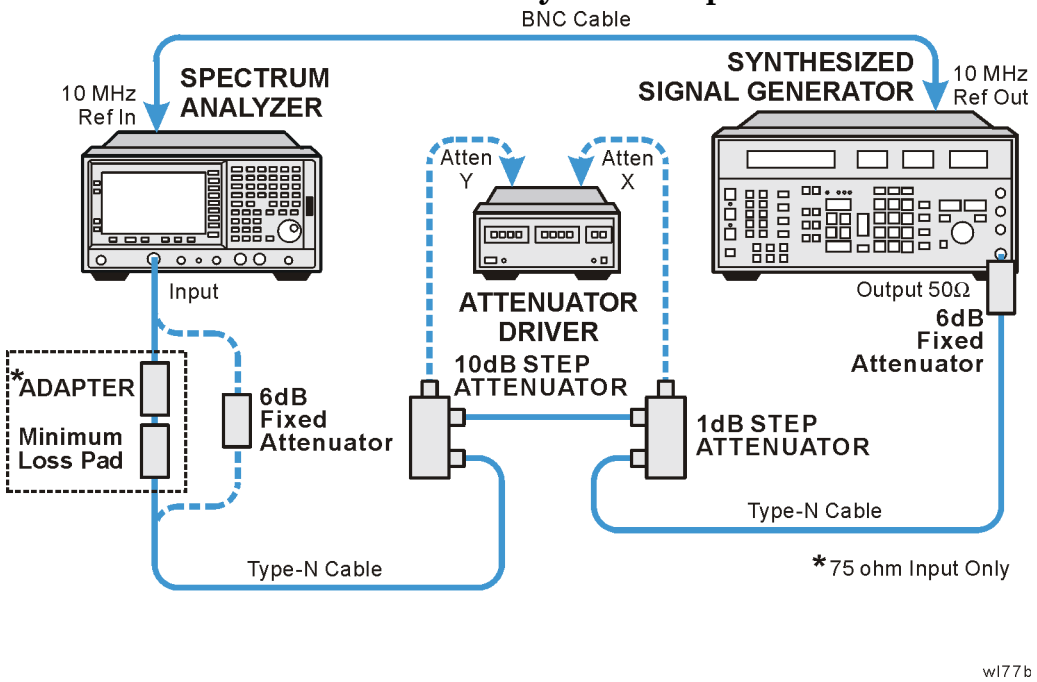

Procedure

Calculate the Actual Attenuation Errors

1. From the calibration data supplied with the 10 dB step attenuator, enter into Column 2 of Table 2-24 through Table 2-27 the actual attenuation for the corresponding nominal attenuation settings. Enter data into Table 2-25 and Table 2-27 if the analyzer has Option 1DR. If no calibration data is supplied for 0 dB, enter zero.

NOTE The Agilent 8496G programmable attenuator has four attenuator sections consisting of 10 dB, 20 dB, 40 dB and 40 dB attenuators. If using the Agilent 8496G programmable attenuator, enter the calibration data for the section three 40 dB step rather than the section four 40 dB step.

2. To calculate the attenuation error at other nominal attenuator settings, subtract the attenuation error at the other settings from the reference attenuator error and enter the result in Column 3 of Table 2-24 through Table 2-27. Enter data into Table 2-25 and Table 2-27 if the analyzer has Option 1DR.

Actual Attenuator Step (X dB) = (Actual Attenuation(20 dB) – Actual Attenuation (X dB))

ManualsPlus.com

Example for 50 dB attenuator setting:

$$\text{Actual Attenuation (50 dB)} = 50.08 \text{ dB}$$

$$\text{Actual Attenuation (20 dB)} = 19.85 \text{ dB}$$

$$\text{Actual Attenuator Step (50 dB)} = (19.85 \text{ dB} - 50.08 \text{dB})$$

$$= -30.23 \text{dB}$$

Log Scale, Analog Bandwidths

1. Set the synthesized signal generator controls as follows:

   FREQUENCY, **50 MHz**
   AMPLITUDE, **12 dBm**

2. Connect the equipment as shown in Figure 2-15. Set the 10 dB step attenuator to 20 dB attenuation and the 1 dB step attenuator to 5 dB attenuation.

3. Press **Preset** on the analyzer. Press the Factory Preset softkey, if it is displayed. Press **System, Alignments, Auto Align, Off**. Set the analyzer by pressing the following keys:

   FREQUENCY, **50 MHz**
   AMPLITUDE, **–20 dBm**
   Attenuation, **10 dB**
   Scale/Div, **1 dB**
   SPAN, **50 kHz**
   BW/Avg, 3 kHz
   Video BW, 30 Hz

4. Set the 1 dB step attenuator to place the signal peak 1 to 3 divisions below the reference level.

5. On the analyzer, press the following keys:

   Single
   Peak Search (or **Search**)
   Marker, **Delta**

6. Set the 10 dB step attenuator and analyzer reference level according to Column 1 and Column 4 of Table 2-24. At each setting, do the following:

   a. Press **Single** on the analyzer.

   b. Press **Peak Search** (or **Search**).

   c. Record the marker delta amplitude reading in Column 5 of Table 2-24.

   d. Add the Actual Attenuator Step to the analyzer marker delta amplitude and enter the result as the Test Record entry in the

ManualsPlus.com

performance test record.

The following is an example for –30 dBm reference level:

Analyzer marker Δ amplitude = (–10.17) dB

Actual Attenuator Step (30 dB) = (–10.07) dB

Test Record Entry = (–10.17) dB–(–10.07) dB = (–0.10) dB

Table 2-24 Log Mode, Analog Bandwidths Worksheet

Column 1	Column 2	Column 3	Column 4	Column 5	Column 6
10 dB Attenuator Nominal Attenuation (dB)	**10 dB Attenuator Actual Attenuation (dB)**	**Actual Attenuator Step (dB)**	**Analyzer Reference Level (dBm)**	**Analyzer Marker Delta Amplitude (dB)**	**Test Record Entry**
20		0 (Ref)	–20	0 (Ref)	(Ref)
10			–10		1)
0			0		2)
30			–30		3)
40			–40		4)
50			–50		5)
60			–60		6)
70			–70		7)
80			–80		8)

Log Scale, Digital Bandwidths, Option 1DR

NOTE If the analyzer is an E4404B/E4405B/E4407B that is not equipped with Option 1DR (narrow resolution bandwidths) or an E4403B/E4408B (with or without Option 1DR), skip to the next section (Linear Scale, Analog Bandwidths).

7. On the analyzer, press the following keys:

   SPAN, 150 Hz
   BW/Avg, 10 Hz
   Video BW, 1 Hz

8. Set the 1 dB step attenuator to set the signal peak 1 to 3 divisions below the reference level.

ManualsPlus.com

9. On the analyzer, press the following keys:

   Single
   Peak Search (or **Search**)
   Marker, **Delta**

10. Set the 10 dB step attenuator and analyzer reference level according to Column 1 and Column 4 of Table 2-25. At each setting, do the following:

    a. Press **Single** on the analyzer.

    b. Press **Peak Search** (or **Search**).

    c. Record the marker delta amplitude reading in Column 5 of Table 2-25.

    d. Add the Actual Attenuator Step to the analyzer marker delta amplitude and enter the result as the Test Record entry in the performance test record.

Table 2-25 Log Mode, Digital Bandwidths Worksheet, Option 1DR

Column 1	Column 2	Column 3	Column 4	Column 5	Column 6
10 dB Attenuator Nominal Attenuation (dB)	10 dB Attenuator Actual Attenuation, (dB)	Actual Attenuator Step (dB)	Analyzer Reference Level (dBm)	Analyzer Marker Delta Amplitude (dB)	Test Record Entry
20		0 (Ref)	–20	0 (Ref)	(Ref)
10			–10		9)
0			0		10)
30			–30		11)
40			–40		12)
50			–50		13)
60			–60		14)
70			–70		15)
80			–80		16)

Linear Scale, Analog Bandwidths

1. Set the 10 dB step attenuator to 20 dB attenuation.
2. Set the 1 dB step attenuator to 5 dB attenuation.
3. Set the analyzer by pressing the following keys:

ManualsPlus.com

AMPLITUDE, Scale Type (Lin)
AMPLITUDE, **More**, **Y Axis Units** (or **Amptd Units**), **dBm**
AMPLITUDE, **–20 dBm**
SPAN, **50 kHz**
BW/Avg, 3 kHz
Video BW, 30 Hz
Sweep, Sweep Cont
Marker, Off

4. Set the 1 dB step attenuator to place the signal peak 1 to 3 divisions below the reference level.
5. On the analyzer, press the following keys:

   Single
   Peak Search (or **Search**)
   Marker, **Delta**

6. Set the 10 dB step attenuator and analyzer reference level according to Column 1 and Column 4 of Table 2-26. At each setting, do the following:
   a. Press **Single** on the analyzer.
   b. Press **Peak Search** (or **Search**).
   c. Record the marker delta amplitude reading in Column 5 of Table 2-26.
   d. Add the Actual Attenuator Step to the Analyzer Marker Delta Amplitude and enter the result as the Test Record entry in the performance test record.

ManualsPlus.com

Table 2-26 Linear Mode, Analog Bandwidths Worksheet

Column 1	Column 2	Column 3	Column 4	Column 5	Column 6
10 dB Attenuator Nominal Attenuation (dB)	10 dB Attenuator Actual Attenuation (dB)	Actual Attenuator Step (dB)	Analyzer Reference Level (dBm)	Analyzer Marker Delta Amplitude (dB)	Test Record Entry
20		0 (Ref)	–20	0 (Ref)	(Ref)
10			–10		17)
0			0		18)
30			–30		19)
40			–40		20)
50			–50		21)
60			–60		22)
70			–70		23)
80			–80		24)

Linear Scale, Digital Bandwidths, Option 1DR

NOTE If the analyzer is an E4404B/E4405B/E4407B that is not equipped with Option 1DR (narrow resolution bandwidths) or an E4403B/E4408B (with or without Option 1DR), skip to the next section (Post-Test Instrument Restoration).

1. On the analyzer, press the following keys:

   SPAN, 150 Hz
   BW/Avg, 10 Hz
   Video BW, 1 Hz

2. Set the 1 dB step attenuator to place the signal peak 1 to 3 divisions below the reference level.
3. On the analyzer, press the following keys:

   Single
   Peak Search (or **Search**)
   Marker, **Delta**

4. Set the 10 dB step attenuator and analyzer reference level according to Column 1 and Column 4 of Table 2-27. At each setting, do the following:

   a. Press **Single** on the analyzer.

ManualsPlus.com

b. Press **Peak Search** (or **Search**).

c. Record the marker delta amplitude reading in Column 5 of Table 2-27.

d. Add the Actual Attenuator Step to the analyzer marker delta amplitude and enter the result as the Test Record entry in the performance test record.

Table 2-27 Linear Mode, Digital Bandwidths Worksheet, Option 1DR

Column 1	Column 2	Column 3	Column 4	Column 5	Column 6
10 dB Attenuator Nominal Attenuation (dB)	**10 dB Attenuator Actual Attenuation (dB)**	**Actual Attenuator Step (dB)**	**Analyzer Reference Level (dBm)**	**Analyzer Marker Delta Amplitude (dB)**	**Test Record Entry**
20		0 (Ref)	–20	0 (Ref)	(Ref)
10			–10		25)
0			0		26)
30			–30		27)
40			–40		28)
50			–50		29)
60			–60		30)
70			–70		31)
80			–80		32)

Post-test Instrument Restoration

1. Remove the RF cable from the analyzer input connector.
2. To restore the default settings on the analyzer, press **Preset, System, Alignments, Auto Align, All**.

ManualsPlus.com

16. Resolution Bandwidth Switching Uncertainty

To measure the resolution bandwidth switching uncertainty an amplitude reference is taken with the resolution bandwidth set to 1 kHz using the marker delta function. The resolution bandwidth is changed to settings between 5 MHz and 1 Hz, as applicable, and the amplitude variation is measured at each setting and compared to the specification. The span is changed as necessary to maintain approximately the same aspect ratio.

The related adjustment for this performance test is “IF Amplitude.”

Equipment Required for Agilent E4402B, E4403B, E4404B, E4405B, E4407B, and E4408B

BNC Cable: Agilent (E4402B, E4404B, E4405B, E4407B, E4408B)
Adapter, Type-N (m) to BNC (f): Agilent (E4402B, E4404B, E4405B, E4407B, E4408B)

Additional Equipment for Option BAB

Adapter, Type-N (f) to APC 3.5 (f)

Figure 2-16 Resolution Bandwidth Switching Test Setup

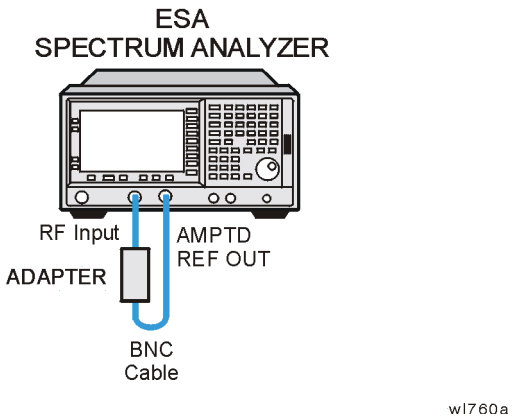

Procedure

1. On the Agilent E4402B, E4403B, E4404B, E4405B, E4407B, or E4408B, connect a BNC cable from the AMPTD REF OUT to the 50 Ω Input using adapters as necessary. Refer to Figure 2-16.
2. Press **Preset** on the analyzer. Press the **Factory Preset** softkey, if it is displayed. Set the analyzer controls by pressing the following keys:

ManualsPlus.com

Input/Output (or **Input**), **Amptd Ref** (On) (*Agilent E4401B, E4411B*)
Input/Output (or **Input**), **Amptd Ref Out** (On) (*Agilent E4402B, E4403B, E4404B, E4405B, E4407, E4408B*)
FREQUENCY, **Center Freq**, **50 MHz**
SPAN, **5 kHz**
AMPLITUDE, **More**, **Y Axis Units** (or **Amptd Units**), **dBm**
AMPLITUDE, **–25 dBm** (*Agilent E4401B, E4411B*)
AMPLITUDE, **–19 dBm (Agilent E4402B, E4403B, E4404B, E4405B, E4407B, E4408B)**
AMPLITUDE, Scale/Div, **1 dB**
BW/Avg, **1 kHz**
BW/Avg, Video BW, **300 Hz**

3. Press **AMPLITUDE** and use the knob to adjust the reference level until the signal appears five divisions below the reference level, then press the following keys:

   Peak Search (or **Search**)
   Marker→, Mkr →CF
   Marker, Delta

4. Set the analyzer span and resolution bandwidth according to Table 2-28.

5. Press **Peak Search** (or **Search**), **Marker**→, Mkr →CF, **Peak Search** (or **Search**) then record the marker delta amplitude reading in the performance verification test record as indicated in Table 2-28.

6. Repeat step 4 and step 5 for each of the remaining resolution bandwidth and span settings listed in Table 2-28.

Table 2-28 Resolution Bandwidth Switching Uncertainty

Analyzer Settings		Marker Delta Amplitude Reading
RES BW	**SPAN**	**Test Record Entry**
1 kHz	5 kHz	0 (Ref)
3 kHz	10 kHz	1)
9 kHz[a]	50 kHz	2)
10 kHz	50 kHz	3)
30 kHz	100 kHz	4)
100 kHz	500 kHz	5)
120 kHz[a]	500 kHz	6)
300 kHz	1 MHz	7)

ManualsPlus.com

Table 2-28 Resolution Bandwidth Switching Uncertainty

Analyzer Settings		Marker Delta Amplitude Reading
RES BW	**SPAN**	**Test Record Entry**
1 MHz	5 MHz	8)
3 MHz	10 MHz	9)
5 MHz	25 MHz	10)

a. These Res BW Settings must be entered from the keypad; they cannot be accessed from the step keys or knob.

7. If you are testing an analyzer equipped with Option 1DR, press **FREQUENCY, Center Freq, 50 MHz, SPAN 10 kHz** and continue with step 8. If the analyzer is not equipped with Option 1DR, stop here.
8. Set the resolution bandwidth and span according to Table 2-29.
9. Press **Peak Search** (or **Search**), **Marker**→, Mkr →CF, Peak Search (or **Search**) then record the Marker Delta Amplitude Reading in the performance verification test record as indicated in Table 2-29.
10. If the analyzer is an ESA-L Series analyzer, repeat step 8 and step 9 for Res BW settings of 300 Hz and 100 Hz with the corresponding span settings listed in Table 2-29.
11. If the analyzer is an ESA-E Series analyzer, repeat step 8 and step 9 for Res BW settings of 300 Hz through 10 Hz with the corresponding span settings listed in Table 2-29.
12. If the analyzer is an ESA-E Series analyzer with firmware revision A.08.00 or later and it is equipped with Option 1D5 (high stability frequency reference), repeat step 8 and step 9 for all the Res BW settings listed in Table 2-29.

Table 2-29 Resolution Bandwidth Switching Uncertainty for Option 1DR

Analyzer Settings		Marker Delta Amplitude Reading
RES BW	**SPAN**	**Test Record Entry**
300 Hz	1 kHz	11)
200 Hz[a]	1 kHz	12)
100 Hz	500 Hz	13)
30 Hz[b]	100 Hz	14)

ManualsPlus.com

Table 2-29 Resolution Bandwidth Switching Uncertainty for Option 1DR

Analyzer Settings		Marker Delta Amplitude Reading
RES BW	**SPAN**	**Test Record Entry**
10 Hz[b]	100 Hz	15)
3 Hz[c,b]	100 Hz	16)
1 Hz[c,b]	100 Hz	17)

a. These Res BW settings must be entered from the keypad; they cannot be accessed from the step keys or knob.
b. These Res BW settings are not available on ESA-L Series analyzers with Option 1DR.
c. These resolution bandwidths are available only on analyzers having options 1DR and 1D5 (High-Stability Frequency Reference) and firmware revision A.08.00 and later.

ManualsPlus.com

17. Absolute Amplitude Accuracy (Reference Settings): Agilent E4401B and E4411B

A power sensor (the “buried sensor”), power splitter, and attenuator combination is characterized at 50 MHz using a second power sensor (the “reference sensor”). The attenuator is then connected to the input of the analyzer and the signal generator power level is adjusted for the appropriate level at 50 MHz. A complete auto alignment is performed. The 50 MHz signal is then measured with the spectrum analyzer. The difference between the power meter reading (corrected for the splitter/attenuator tracking error) and spectrum analyzer readings is calculated.

For analyzers with 75Ω inputs, a minimum loss pad is used between the attenuator and the analyzer, and a lower-value attenuator is used.

For analyzers with Option 1DS, Preamplifier, the test is repeated with preamp on

Equipment Required

Synthesized signal generator
Power meter
RF power sensor (2 required)
Power splitter
20 dB attenuator
Cable, Type-N, 152-cm (60-in)
Adapter, Type-N (m) to Type-N (m)

Additional Equipment for 75 Ω Input

Power sensor, 75 Ω
Adapter, mechanical, Type-N (f), 75 Ω to Type-N (m) 50 Ω
Pad, minimum loss
Adapter, Type-N (f), to BNC (m), 75 Ω
10 dB attenuator

Procedure

This performance test consists of three parts:

Part 1. Splitter/Attenuator Characterization

Part 2. Absolute Amplitude Accuracy, Preamp Off

Part 3. Absolute Amplitude Accuracy, Preamp On (Option 1DS)

Parts 1 and 2 should be performed on all Agilent Spectrum Analyzers. Part 3 should be performed only on ESA-E Series Spectrum Analyzers

ManualsPlus.com

equipped with Option 1DS, Preamplifier.

Part 1. Splitter/Attenuator Characterization

Figure 2-17 Power Splitter/Attenuator Characterization Setup

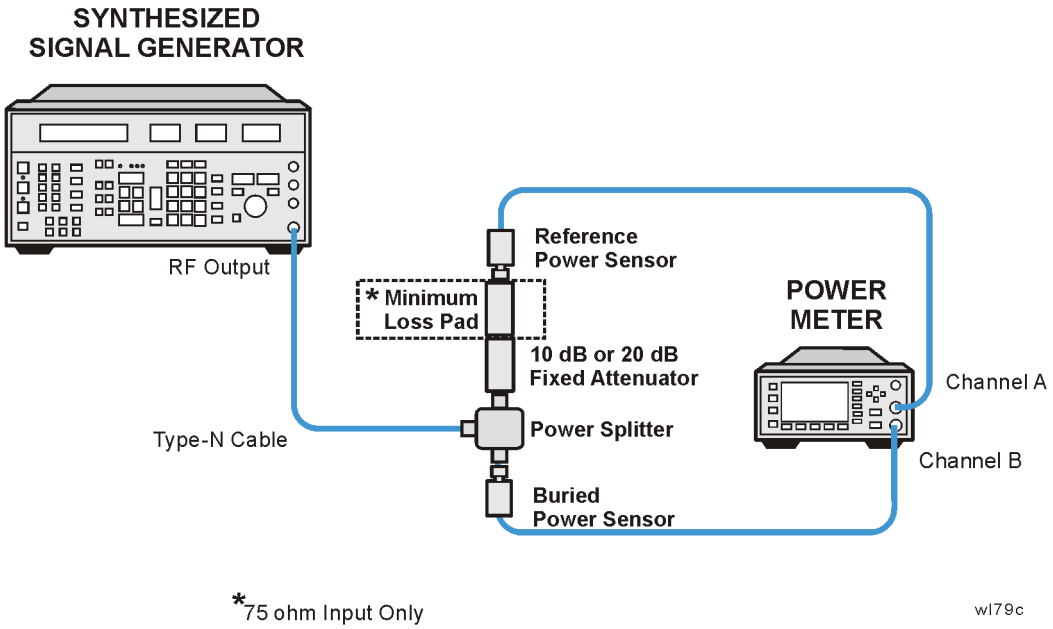

1. Refer to Figure 2-17. Connect one RF power sensor to Channel A of the power meter. This will be the “reference” sensor. Connect the other RF power sensor to Channel B of the power meter. This will be the “buried” sensor.

   75Ω Inputs, Opt 1DP: Connect the 75Ω power sensor to Channel A of the power meter. This will be the “reference” sensor.

2. Zero and calibrate both power sensors.
3. On the power meter, set the Channel A calibration factor to the reference sensor’s reference calibration factor.
4. On the power meter, set the Channel B calibration factor to 100%. Do not change this calibration factor during this test.
5. Connect the equipment as shown in Figure 2-17, “Power Splitter/Attenuator Characterization Setup,”. Use the 20 dB fixed attenuator for 50Ω analyzers. Use the 10 dB fixed attenuator and the minimum loss pad for 75Ω analyzers. Note that the reference sensor connects to either the fixed attenuator (50Ω analyzers) or the minimum loss pad (75Ω analyzers).
6. Set the synthesized signal generator frequency to 50 MHz and amplitude to +12 dBm

ManualsPlus.com

7. Adjust the synthesized signal generator amplitude to obtain a Channel A power meter reading of –14 dBm ±0.1 dB.

   75Ω Inputs, Opt 1DP: Adjust the source amplitude to obtain a Channel A power meter reading of –10 dBm ±0.1 dB.

8. Record the Channel A and Channel B power meter readings below:

   Channel A (reference sensor): _____ dBm
   Channel B (buried sensor): _____ dBm

9. Calculate the splitter/attenuator tracking error as follows and record the result below:

   Tracking Error = Channel A Power – Channel B Power

   For example, if Channel A Power is –14.07 dBm and Channel B power is +6.23 dBm, the splitter tracking error is –20.30 dB.

   Tracking Error: _____ dB

NOTE NOTE: Tracking errors when using the minimum loss pad will be nominally –15.7 dB

10. Proceed to Part 2: Absolute Amplitude Accuracy, Preamp Off.

Part 2. Absolute Amplitude Accuracy, Preamp Off

Figure 2-18 Absolute Amplitude Accuracy Test Setup

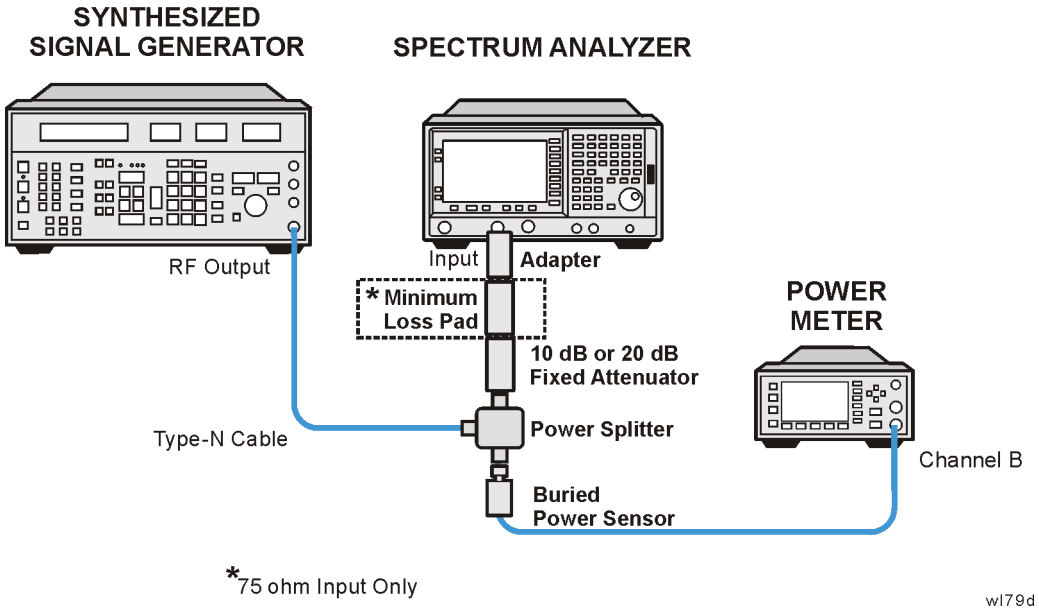

1. On the synthesized signal generator set the controls as follows:

ManualsPlus.com

FREQUENCY, **50 MHz**
AMPLITUDE, **–1 dBm** (50 Ω *Input only*)
AMPLITUDE, **–2.3 dBm** (75 Ω *Input only*)
RF ON
AM OFF
FM OFF

2. Press **Preset** on the analyzer. (Press the **Factory Preset** softkey, if it is displayed.)
3. Press **System**, **Alignments**, **Align Now**, All. Wait for the auto alignment to finish. Press **System**, **Alignments**, **Auto Align**, Off.
4. Refer to Figure 2-18. Disconnect the reference sensor from the fixed attenuator. Connect the fixed attenuator or minimum loss pad to the input of the analyzer using an adapter. Do not use a cable.

   75Ω Input: Disconnect the reference sensor from the minimum loss pad. Connect the minimum loss pad to the input of the analyzer using an adapter, do not use a cable.
5. Calculate the ideal buried sensor reading by subtracting the Tracking Error recorded in step 9 of Part 1 from the ideal input level to the analyzer, as indicated in the table below:

Input Impedance	Ideal Input Level	Tracking Error from Part 1, step 9	Ideal Buried Sensor Reading
50Ω	–27 dBm		
75Ω	–24 dBm		

   Ideal Buried Sensor Reading = Ideal Input Level – Tracking Error
6. Adjust the synthesized signal generator to obtain the Ideal Buried Sensor Reading calculated above ±0.1 dB.
7. Calculate the Corrected Power Meter Reading by adding the current power meter reading to the Tracking Error recorded in Part 1, step 9 and record the result below:

   Corrected Power Meter Reading = Power Meter Reading + Tracking Error

   Example: If the Power Meter Reading is 0.24 dBm and the Tracking Error is –20.3 dB, the Corrected Power Meter Reading is –20.06 dBm

   Corrected Power Meter Reading _____ dBm
8. Set the analyzer by pressing the following keys:

   FREQUENCY, **Center Freq**, 50 MHz
   SPAN, 2 kHz

ManualsPlus.com

BW/ Avg, **Resolution BW**, 1 kHz (Man)
BW/Avg, **Video BW**, 1 kHz (Man)
AMPLITUDE, **More**, Y Axis Units, dBm (50Ω Input only)
AMPLITUDE, **More**, Y Axis Units, dBmV (75Ω Input only)
AMPLITUDE, **Ref Level**, –25 dBm (50Ω Input only)
AMPLITUDE, **Ref Level**, +28.75 dBmV (75Ω Input only)
AMPLITUDE, **Attenuation**, 10 dB
AMPLITUDE, **Scale Type** (Log)
Det/Demod, **Detector**, **Sample**

9. Press **AMPLITUDE**, **More**, **Y Axis Units** (or Amptd Units), **Volts**.

10. Press **Peak Search** (or Search).

11. Convert the marker amplitude reading from Volts to dBm using the appropriate equation below:

$$50\Omega \text{ Input Marker Amptd (dBm)} = 10 \times \log_{10}\left(\text{Mkr}\left(\frac{V^2}{0.05}\right)\right)$$

$$75\Omega \text{ Input Marker Amptd (dBm)} = 10 \times \log_{10}\left(\text{Mkr}\left(\frac{V^2}{0.075}\right)\right)$$

Marker Amptd (dBm) _____ dBm

12. Subtract the Corrected Power Meter Reading noted in step 7 from the Marker Amptd (dBm) recorded in step 11. Record the difference, Absolute Amplitude Accuracy (Log), as TR Entry 1 in the performance verification test record:

Absolute Amplitude Accuracy (Log) = Marker Amptd (dBm) – Corrected Power Meter Reading (dBm)

13. Press **AMPLITUDE**, **Scale Type** (Lin), **More**, **Y-Axis Units** (or Amptd Units), **Volts**.

14. Press **Peak Search** (or Search).

15. Convert the marker amplitude reading from Volts to dBm using the appropriate equation below:

$$50\Omega \text{ Input Marker Amptd (dBm)} = 10 \times \log_{10}\left(\text{Mkr}\left(\frac{V^2}{0.05}\right)\right)$$

$$75\Omega \text{ Input Marker Amptd (dBm)} = 10 \times \log_{10}\left(\text{Mkr}\left(\frac{V^2}{0.075}\right)\right)$$

Marker Amptd (dBm) _____ dBm

16. Subtract the Corrected Power Meter Reading noted in step 7 from the Marker Amptd (dBm) recorded in step 15. Record the difference, Absolute Amplitude Accuracy (Lin), as TR Entry 2 in the performance verification test record:

ManualsPlus.com

Absolute Amplitude Accuracy (Lin) = Marker Amptd (dBm) – Corrected Power Meter Reading (dBm)

17. If the analyzer is not equipped with Option 1DS, Press Preset and wait for the preset routine to finish. Press **System**, **Alignments**, **Auto Align**, **All**.

18. If the analyzer is equipped with Option 1DS, Preamplifier, proceed to Part 3. Absolute Amplitude Accuracy, Preamp On (Option 1DS).

Part 3. Absolute Amplitude Accuracy, Preamp On (Option 1DS)

1. On the synthesized signal generator set the controls as follows:

   FREQUENCY, **50 MHz**
   AMPLITUDE, **–4 dBm** (50 Ω *Input only*)
   AMPLITUDE, **–8.3 dBm** (75 Ω *Input only*)
   RF ON
   AM OFF
   FM OFF

2. Calculate the ideal buried sensor reading by subtracting the Tracking Error recorded in step 9 of Part 1 from –30 dBm, the ideal input level to the analyzer, as indicated below:

   Ideal Buried Sensor Reading = –30 dBm – Tracking Error

3. Adjust the synthesized signal generator to obtain the Ideal Buried Sensor Reading calculated above ±0.1 dB.

4. Calculate the Corrected Power Meter Reading by adding the current power meter reading to the Tracking Error recorded in Part 1, step 9 and record the result below:

   Corrected Power Meter Reading = Power Meter Reading + Tracking Error

   Example: If the Power Meter Reading is –9.74 dBm and the Tracking Error is –20.3 dB, the Corrected Power Meter Reading is –30.04 dBm

   Corrected Power Meter Reading _____ dBm

5. Set the analyzer by pressing the following keys:

   FREQUENCY, **Center Freq**, 50 MHz
   SPAN, 2 kHz
   BW/ Avg, **Resolution BW**, 1 kHz (Man)
   BW/Avg, **Video BW**, 1 kHz (Man)
   AMPLITUDE, **Scale Type** (Log)
   AMPLITUDE, **More**, **Y Axis Units**, dBm (50Ω Input only)
   AMPLITUDE, **More**, **Y Axis Units**, dBmV (75Ω Input only)
   AMPLITUDE, **Ref Level**, –30 dBm (50Ω Input only)
   AMPLITUDE, **Ref Level**, +18.75 dBmV (75Ω Input only)
   AMPLITUDE, **Attenuation**, 0 dB
   AMPLITUDE, **More**, **Int Preamp** (On)

ManualsPlus.com

Det/Demod, **Detector**, **Sample**

6. Press **AMPLITUDE**, **More**, **Y Axis Units** (or Amptd Units), **Volts**.
7. Press **Peak Search** (or Search).
8. Convert the marker amplitude reading from Volts to dBm using the appropriate equation below:

$$50\Omega \text{ Input Marker Amptd (dBm)} = 10 \times \log_{10}\left(\text{Mkr}\left(\frac{V^2}{0.05}\right)\right)$$

$$75\Omega \text{ Input Marker Amptd (dBm)} = 10 \times \log_{10}\left(\text{Mkr}\left(\frac{V^2}{0.075}\right)\right)$$

Marker Amptd (dBm) _____ dBm

9. Subtract the Corrected Power Meter Reading noted in step 4 from the Marker Amptd (dBm) recorded in step 8. Record the difference, Absolute Amplitude Accuracy (Log), as TR Entry 3 in the performance verification test record:

   Absolute Amplitude Accuracy (Log) = Marker Amptd (dBm) - Corrected Power Meter Reading (dBm)

10. Press **AMPLITUDE**, **Scale Type** (Lin), **More**, **Y-Axis Units** (or Amptd Units), **Volts**.
11. Press **Peak Search** (or Search).
12. Convert the marker amplitude reading from Volts to dBm using the appropriate equation below:

$$50\Omega \text{ Input Marker Amptd (dBm)} = 10 \times \log_{10}\left(\text{Mkr}\left(\frac{V^2}{0.05}\right)\right)$$

$$75\Omega \text{ Input Marker Amptd (dBm)} = 10 \times \log_{10}\left(\text{Mkr}\left(\frac{V^2}{0.075}\right)\right)$$

Marker Amptd (dBm) _____ dBm

13. Subtract the Corrected Power Meter Reading noted in step 4 from the Marker Amptd (dBm) recorded in step 12. Record the difference, Absolute Amplitude Accuracy (Lin), as TR Entry 4 in the performance verification test record:

    Absolute Amplitude Accuracy (Lin) = Marker Amptd (dBm) - Corrected Power Meter Reading (dBm)

14. Press **Preset** and wait for the preset routine to finish. Press **System**, **Alignments**, **Auto Align**, **All**.

ManualsPlus.com

18. Absolute Amplitude Accuracy (Reference Settings): Agilent E4402B, E4403B, E4404B, E4405B, E4407B, and E4408B

A power sensor (the “buried sensor”), power splitter, and attenuator combination is characterized at 50 MHz using a second power sensor (the “reference sensor”). The attenuator is then connected to the input of the analyzer and the signal generator power level is adjusted for the appropriate level at 50 MHz. A complete auto alignment is performed. The 50 MHz signal is then measured with the spectrum analyzer. The difference between the power meter reading (corrected for the splitter/attenuator tracking error) and spectrum analyzer readings is calculated.

For analyzers with Option 1DS, Preamplifier, the test is repeated with preamp on

Equipment Required

Synthesized signal generator
Power meter
RF power sensor (2 required)
Power splitter
20 dB attenuator
Cable, Type-N, 152-cm (60 in)
Adapter, Type-N (m to Type-N (m)

Additional Equipment for Option BAB

Adapter, Type-N (m) to APC 3.5 (f)

Procedure

This performance test consists of three parts:

Part 1. Splitter/Attenuator Characterization

Part 2. Absolute Amplitude Accuracy, Preamp Off

Part 3. Absolute Amplitude Accuracy, Preamp On (Option 1DS)

Parts 1 and 2 should be performed on all ESA Series Spectrum Analyzers. Part 3 should be performed only on ESA-E Series Spectrum Analyzers equipped with Option 1DS, Preamplifier.

ManualsPlus.com

Part 1. Splitter/Attenuator Characterization

Figure 2-19 Power Splitter/Attenuator Characterization Setup

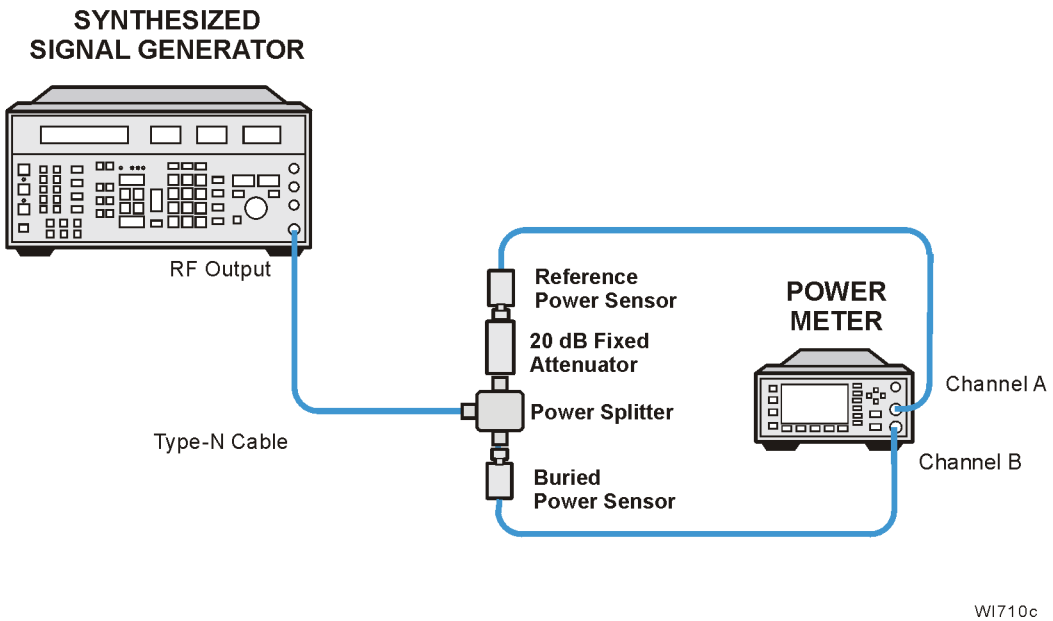

1. Refer to Figure 2-19. Connect one RF power sensor to Channel A of the power meter. This will be the “reference” sensor. Connect the other RF power sensor to Channel B of the power meter. This will be the “buried” sensor.
2. Zero and calibrate both power sensors.
3. On the power meter, set the Channel A calibration factor to the reference sensor’s reference calibration factor.
4. On the power meter, set the Channel B calibration factor to 100%. Do not change this calibration factor during this test.
5. Connect the equipment as shown in Figure 2-19, “Power Splitter/Attenuator Characterization Setup,”.
6. Set the synthesized signal generator frequency to 50 MHz and amplitude to +12 dBm
7. Adjust the synthesized signal generator amplitude to obtain a Channel A power meter reading of –14 dBm ±0.1 dB.
8. Record the Channel A and Channel B power meter readings below:

   Channel A (reference sensor): _____ dBm
   Channel B (buried sensor): _____ dBm

9. Calculate the splitter/attenuator tracking error as follows and record the result below:

ManualsPlus.com

Tracking Error = Channel A Power – Channel B Power

For example, if Channel A Power is –14.07 dBm and Channel B power is +6.23 dBm, the splitter tracking error is –20.30 dB.

Tracking Error: _____ dB

10. Proceed to Part 2: Absolute Amplitude Accuracy, Preamp Off.

Part 2. Absolute Amplitude Accuracy, Preamp Off

Figure 2-20 Absolute Amplitude Accuracy Test Setup

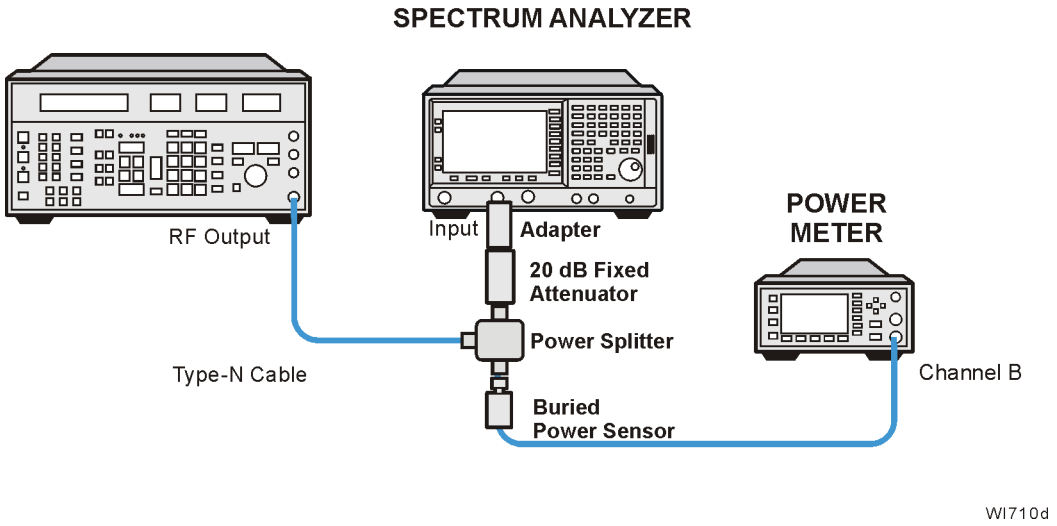

1. On the synthesized signal generator set the controls as follows:

   FREQUENCY, **50 MHz**
   AMPLITUDE, **+6 dBm**
   RF ON
   AM OFF
   FM OFF

2. Press **Preset** on the analyzer. (Press the Factory Preset softkey, if it is displayed.)
3. Use a BNC cable and adapter to connect the `AMPTD REF OUT` to the `INPUT 50Ω`.
4. Press **System**, **Alignments**, **Align Now**, **All**. Wait for the auto alignment to finish. Press **System**, **Alignments**, **Auto Align**, Off.
5. Refer to Figure 2-20. Disconnect the reference sensor from the fixed attenuator. Connect the fixed attenuator to the input of the analyzer using an adapter. Do not use a cable.

ManualsPlus.com

6. Calculate the ideal buried sensor reading by subtracting the Tracking Error recorded in step 9 of Part 1 from –20 dBm, the ideal input level to the analyzer.

   Ideal Buried Sensor Reading = –20 dBm – Tracking Error

7. Adjust the synthesized signal generator to obtain the Ideal Buried Sensor Reading calculated above ±0.1 dB.

8. Calculate the Corrected Power Meter Reading by adding the current power meter reading to the Tracking Error recorded in Part 1, step 9 and record the result below:

   Corrected Power Meter Reading = Power Meter Reading + Tracking Error

   Example: If the Power Meter Reading is 0.24 dBm and the Tracking Error is –20.3 dB, the Corrected Power Meter Reading is –20.06 dBm

   Corrected Power Meter Reading _____ dBm

9. Set the analyzer by pressing the following keys:

   FREQUENCY, **Center Freq**, 50 MHz
   SPAN, 2 kHz
   BW/ Avg, **Resolution BW**, 1 kHz (Man)
   BW/Avg, **Video BW**, 1 kHz (Man)
   AMPLITUDE, **More**, Y Axis Units, dBm
   AMPLITUDE, **Ref Level**, –20 dBm
   AMPLITUDE, **Attenuation**, 10 dB
   AMPLITUDE, **Scale Type** (Log)
   Det/Demod, **Detector**, **Sample**

10. Press **AMPLITUDE**, **More**, **Y Axis Units** (or Amptd Units), **Volts**.

11. Press **Peak Search** (or Search).

12. Convert the marker amplitude reading from Volts to dBm using the equation below:

$$50\Omega \text{ Input Marker Amptd (dBm)} = 10 \times \log_{10}\left(\text{Mkr}\left(\frac{V^2}{0.05}\right)\right)$$

   Marker Amptd (dBm) _____ dBm

13. Subtract the Corrected Power Meter Reading noted in step 8 from the Marker Amptd (dBm) recorded in step 12. Record the difference, Absolute Amplitude Accuracy (Log), as TR Entry 1 in the performance verification test record:

   Absolute Amplitude Accuracy (Log) = Marker Amptd (dBm) – Corrected Power Meter Reading (dBm)

14. Press **AMPLITUDE**, **Scale Type** (Lin), **More**, **Y-Axis Units** (or Amptd Units), **Volts**.

ManualsPlus.com

15. Press **Peak Search** (or Search).

16. Convert the marker amplitude reading from Volts to dBm using the equation below:

$$50\Omega \text{ Input Marker Amptd (dBm)} = 10 \times \log_{10}\left(\text{Mkr}\left(\frac{V^2}{0.05}\right)\right)$$

Marker Amptd (dBm) _____ dBm

17. Subtract the Corrected Power Meter Reading noted in step 8 from the Marker Amptd (dBm) recorded in step 16. Record the difference, Absolute Amplitude Accuracy (Lin), as TR Entry 2 in the performance verification test record:

Absolute Amplitude Accuracy (Lin) = Marker Amptd (dBm) – Corrected Power Meter Reading (dBm)

18. If the analyzer is not equipped with Option 1DS, Press Preset and wait for the preset routine to finish. Press **System**, **Alignments**, **Auto Align**, **All**.

19. If the analyzer is equipped with Option 1DS, Preamplifier, proceed to Part 3. Absolute Amplitude Accuracy, Preamp On (Option 1DS).

Part 3. Absolute Amplitude Accuracy, Preamp On (Option 1DS)

1. On the synthesized signal generator set the controls as follows:

   FREQUENCY, **50 MHz**
   AMPLITUDE, **–4 dBm**
   RF ON
   AM OFF
   FM OFF

2. Calculate the ideal buried sensor reading by subtracting the Tracking Error recorded in step 9 of Part 1 from –30dBm, the ideal input level to the analyzer, as indicated below:

   Ideal Buried Sensor Reading = –30 dBm – Tracking Error

3. Adjust the synthesized signal generator to obtain the Ideal Buried Sensor Reading calculated above ±0.1 dB.

4. Calculate the Corrected Power Meter Reading by adding the current power meter reading to the Tracking Error recorded in Part 1, step 9 and record the result below:

   Corrected Power Meter Reading = Power Meter Reading + Tracking Error

   Example: If the Power Meter Reading is –9.74 dBm and the Tracking Error is –20.3 dB, the Corrected Power Meter Reading is –30.04 dBm

   Corrected Power Meter Reading _____ dBm

ManualsPlus.com

5. Set the analyzer by pressing the following keys:

   FREQUENCY, **Center Freq**, 50 MHz
   SPAN, 2 kHz
   BW/ Avg, **Resolution BW**, 1 kHz (Man)
   BW/Avg, **Video BW**, 1 kHz (Man)
   AMPLITUDE, **Scale Type** (Log)
   AMPLITUDE, **More**, **Y Axis Units**, dBm
   AMPLITUDE, **Ref Level**, –30 dBm
   AMPLITUDE, **Attenuation**, 0 dB
   AMPLITUDE, **More**, **Int Preamp** (On)
   Det/Demod, **Detector**, **Sample**

6. Press **AMPLITUDE**, **More**, **Y Axis Units** (or Amptd Units), **Volts**.

7. Press **Peak Search** (or Search).

8. Convert the marker amplitude reading from Volts to dBm using the equation below:

$$50\Omega \text{ Input Marker Amptd (dBm)} = 10 \times \log_{10}\left(\text{Mkr}\left(\frac{V^2}{0.05}\right)\right)$$

   Marker Amptd (dBm) _____ dBm

9. Subtract the Corrected Power Meter Reading noted in step 4 from the Marker Amptd (dBm) recorded in step 8. Record the difference, Absolute Amplitude Accuracy (Log), as TR Entry 3 in the performance verification test record:

   Absolute Amplitude Accuracy (Log) = Marker Amptd (dBm) - Corrected Power Meter Reading (dBm)

10. Press **AMPLITUDE**, **Scale Type** (Lin), **More**, **Y-Axis Units** (or Amptd Units), **Volts**.

11. Press **Peak Search** (or Search).

12. Convert the marker amplitude reading from Volts to dBm using the equation below:

$$50\Omega \text{ Input Marker Amptd (dBm)} = 10 \times \log_{10}\left(\text{Mkr}\left(\frac{V^2}{0.05}\right)\right)$$

   Marker Amptd (dBm) _____ dBm

13. Subtract the Corrected Power Meter Reading noted in step 4 from the Marker Amptd (dBm) recorded in step 12. Record the difference, Absolute Amplitude Accuracy (Lin), as TR Entry 4 in the performance verification test record:

   Absolute Amplitude Accuracy (Lin) = Marker Amptd (dBm) - Corrected Power Meter Reading (dBm)

14. Press **Preset** and wait for the preset routine to finish. Press **System**,

ManualsPlus.com

Alignments, **Auto Align**, **All**.

ManualsPlus.com

19. Overall Absolute Amplitude Accuracy: Agilent E4401B and E4411B

This test measures the absolute amplitude of the analyzer at 50 MHz. A synthesized signal generator and attenuators are used as the signal source to the analyzer. A power meter is used to measure this signal source with the attenuators set to 0 dB. The value measured is recorded as the source amplitude. The attenuators are used to adjust the signal levels applied to the analyzer between the initial signal amplitude (set with the power meter) and –50 dBm. The amplitude measured by the analyzer is compared to the actual signal level and the amplitude error is calculated.

There are no related adjustment procedures for this performance test.

Equipment Required

Synthesized signal generator
10 dB step attenuator
1 dB step attenuator
Attenuator interconnection kit
Attenuator driver (if programmable step attenuators are used)
6 dB fixed attenuator (2 *required*)
Power meter
Power sensor
Cable, Type-N, 62-cm (24 in.) (m) (2 *required*)
Cable, BNC
Adapter, Type-N (f) to Type-N (f)

Additional Equipment for 75 Ω Input

Power sensor, 75 Ω
Pad, minimum loss
Adapter, mechanical, Type-N (f), 75 Ω to Type-N (m) 50 Ω
Adapter, Type-N (f), to BNC (m), 75 Ω
Adapter, Type-N (f) to Type-N (f), 75 Ω

Procedure

Measuring 0 dBm Reference Level

1. Press **Preset** on the analyzer. Press the **Factory Preset** softkey, if it is displayed.
2. Perform a complete self-alignment and set Auto Align Off. Press **System, Alignments, Align Now, All**, and wait for the alignment routine to finish. Then, press **Return, Auto Align, Off**.

ManualsPlus.com

3. Zero and calibrate the power meter and power sensor connected to Channel A of the power meter.

75 Ω Inputs: Zero and calibrate the power meter and 75 Ω power sensor connected to Channel A of the power meter.

Figure 2-21 Measure Source Test Setup

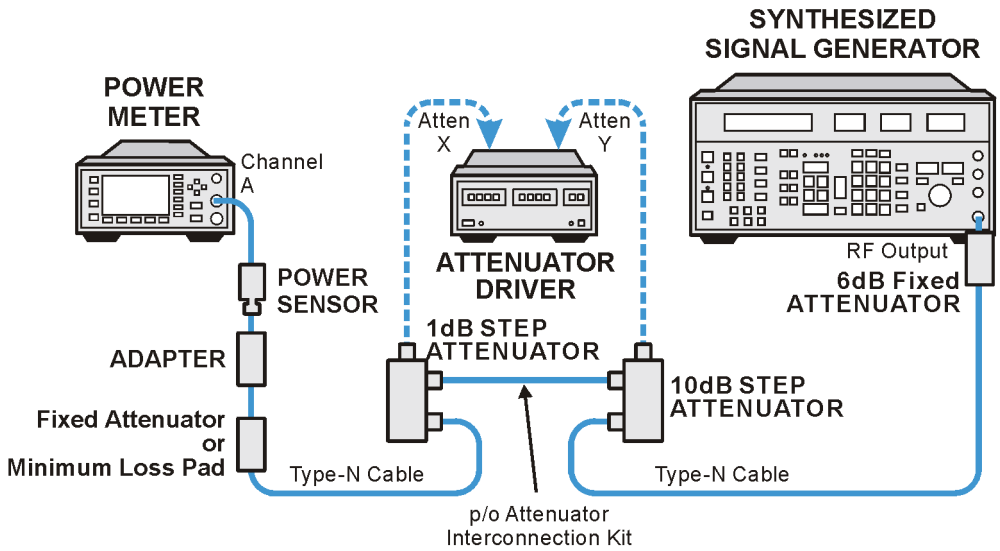

4. Connect the equipment as shown in Figure 2-21. The power sensor should connect directly to the 6 dB fixed attenuator using an adapter.

   75 Ω Inputs: Use the minimum loss pad in place of the 6 dB fixed attenuator and a 75 Ω Type-N (f) to Type-N (f) adapter.

5. Preset the synthesized signal generator. Manually press **Blue Key, Special, 0, 0**. Set the signal generator as follows:

   FREQUENCY, 50 MHz
   AMPLITUDE, 12 dBm

6. Set the 10 dB and 1 dB step attenuators to 0 dB.

7. Obtain the actual attenuation for the 0 dB setting of each attenuator at 50 MHz from the metrology data for the step attenuators. In some cases this value might be zero, by definition. Add the two actual attenuations to obtain the 0 dB reference attenuation.

$$\text{RefAtten}_{0dB} = 10\text{ dB Actual}_{0dB} + 1\text{ dB Actual}_{0dB}$$

   For example, if the actual attenuation for the 10 dB step attenuator is 0.03 dB, 10 dB Actual_{0dB} is 0.03 dB. If the actual attenuation for the 1 dB step attenuator is 0.02 dB, 1 dB Actual_{0dB} is 0.02 dB. In this case RefAtten_{0dB} is 0.05 dB.

ManualsPlus.com

8. Obtain the metrology data for the step attenuators at 50 MHz. Enter the actual attenuation values for each attenuator setting as indicated in Table 2-30. If using a programmable attenuator, the section three 40 dB step should be used for the 40 dB setting on the 10 dB step attenuator. Similarly, the section three 4 dB step should be used for the 4 dB setting on the 1 dB step attenuator.

Table 2-30 Amplitude Accuracy Worksheet, 0 dBm Reference Level

1 dB Step Attenuator		10 dB Step Attenuator		Total Attenuation		Nominal Amptd.	Meas. Amptd.	Amptd. Accuracy Test Record Entry
Setting	Actual	Setting	Actual	Setting	Actual			
0 dB		0 dB		0 dB		0 dBm		1)
0 dB		10 dB		10 dB		–10 dBm		2)
0 dB		20 dB		20 dB		–20 dBm		3)
0 dB		30 dB		30 dB		–30 dBm		4)
0 dB		40 dB		40 dB		–40 dBm		5)
0 dB		50 dB		50 dB		–50 dBm		6)

9. Calculate the actual total attenuation by adding the actual attenuation for the 1 dB step attenuator to the actual attenuation for the 10 dB step attenuator for each total attenuation setting listed in Table 2-30.

NOTE The external attenuators and cables are now part of the “source.”

10. Adjust the signal generator amplitude for a power meter reading of 0 dBm ±0.2 dB. Record the power meter reading here:

    $Amptd_{0dBm}$ = _____ dBm

11. Connect the equipment as indicated in Figure 2-22. The fixed attenuator must connect directly to the analyzer input.

    75 Ω Inputs: The minimum loss pad should be connected to the analyzer input using a Type N (f) to BNC (m) 75 Ω adapter.

ManualsPlus.com

Figure 2-22 Amplitude Accuracy Test Setup

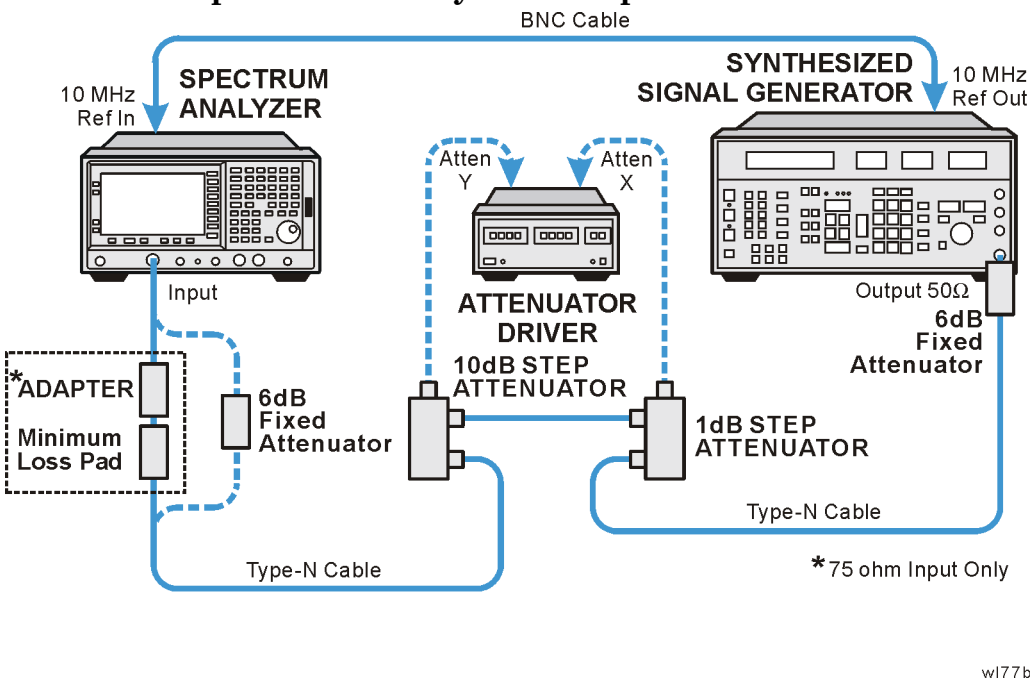

12. Set the analyzer as follows:

FREQUENCY, Center Freq, 50 MHz
SPAN, 6 kHz
BW/Avg, Res BW, 1 kHz
AMPLITUDE, **More**, **Y Axis Units** (or **Amptd Units**), **dBm**
AMPLITUDE, **Ref Level**, **0 dBm**
Attenuation, **10 dB** (Man)

13. Perform the following steps for each of the nominal amplitude values listed in Table 2-30:

a. Set the 1 dB step attenuator as indicated in Table 2-30.
b. Set the 10 dB step attenuator as indicated in Table 2-30.
c. Press **Single** and wait for the sweep to finish.
d. Press **Peak Search** (or **Search**). Even though the signal may be slightly above the reference level for the first nominal amplitude setting, the marker can still make a valid measurement.
e. Record the marker (`Mkr1`) amplitude value as the measured amplitude in Table 2-30.
f. If the nominal amplitude is 0 dBm, calculate the amplitude accuracy as follows:

$$\text{Amplitude Accuracy} = \text{Measured Amplitude} - \text{Amptd}_{0dBm}$$

g. If the amplitude is less than 0 dBm, calculate the amplitude accuracy as follows:

$$\text{Amplitude Accuracy} = \text{Measured Amplitude} - (\text{Amptd}_{0dBm} - \text{ActualTotalAtten} + \text{RefAtten}_{0dB})$$

h. Record the amplitude accuracy in the performance verification

ManualsPlus.com

test record as indicated in Table 2-30.

Measuring –20 dBm Reference Level

1. Press **AMPLITUDE**, **Ref Level**, **–20 dBm**.
2. Copy the actual total attenuation values from Table 2-30 into the actual total attenuation column in Table 2-31. Not all values in Table 2-30 will be required in Table 2-31.

Table 2-31 Amplitude Accuracy Worksheet, –20 dBm Reference Level

1 dB Step Attenuator	10 dB Step Attenuator	Total Attenuation		Nominal Amplitude	Measured Amplitude	Amplitude Accuracy
Setting	Actual	Setting	Actual			Test Record Entry
0 dB	20 dB	20 dB		–20 dBm		7)
0 dB	30 dB	30 dB		–30 dBm		8)
0 dB	40 dB	40 dB		–40 dBm		9)
0 dB	50 dB	50 dB		–50 dBm		10)

3. Perform the following steps for each of the nominal amplitude values listed in Table 2-31:
   a. Set the 1 dB step attenuator as indicated in Table 2-31.
   b. Set the 10 dB step attenuator as indicated in Table 2-31.
   c. Press **Single** and wait for the sweep to finish.
   d. Press **Peak Search** (or **Search**). Even though the signal may be slightly above the reference level for the first nominal amplitude setting, the marker can still make a valid measurement.
   e. Record the marker (`Mkr1`) amplitude value as the measured amplitude in Table 2-31.
   f. Calculate the amplitude accuracy as follows:

$$\text{Amplitude Accuracy} = \text{Measured Amplitude} - (\text{Amptd}_{0\text{dBm}} - \text{ActualTotalAtten} + \text{RefAtten}_{0\text{dB}})$$

   g. Record the amplitude accuracy in the performance verification test record as indicated in Table 2-31.

Measuring –40 dBm Reference Level

1. Press **AMPLITUDE**, **Ref Level**, **–40 dBm**.
2. Copy the actual total attenuation values from Table 2-31 into the actual total attenuation column in Table 2-32. Not all values in Table 2-31 will be required in Table 2-32.

ManualsPlus.com

Table 2-32 Amplitude Accuracy Worksheet, –40 dBm Reference Level

1 dB Step Attenuator	10 dB Step Attenuator	Total Attenuation		Nominal Amplitude	Measured Amplitude	Amplitude Accuracy
Setting	Actual	Setting	Actual			Test Record Entry
0 dB	40 dB	40 dB		–40 dBm		11)
0 dB	50 dB	50 dB		–50 dBm		12)

3. Perform the following steps for each of the nominal amplitude values listed in Table 2-32:

   a. Set the 1 dB step attenuator as indicated in Table 2-32.
   b. Set the 10 dB step attenuator as indicated in Table 2-32.
   c. Press **Single** and wait for the sweep to finish.
   d. Press **Peak Search** (or **Search**). Even though the signal may be slightly above the reference level for the first nominal amplitude setting, the marker can still make a valid measurement.
   e. Record the marker (`Mkr1`) amplitude value as the measured amplitude in Table 2-32.
   f. Calculate the amplitude accuracy as follows:

   $$\text{Amplitude Accuracy} = \text{Measured Amplitude} - (\text{Amptd}_{0dBm} - \text{ActualTotalAtten} + \text{RefAtten}_{0dB})$$

   g. Record the amplitude accuracy in the performance verification test record as indicated in Table 2-32.

Measuring –50 dBm Reference Level

1. Press **AMPLITUDE**, **Ref Level**, **–50 dBm**.

2. Copy the actual total attenuation values from Table 2-32 into the actual total attenuation column in Table 2-33. Not all values in Table 2-32 will be required in Table 2-33.

Table 2-33 Amplitude Accuracy Worksheet, –50 dBm Reference Level

1 dB Step Attenuator	10 dB Step Attenuator	Total Attenuation		Nominal Amplitude	Measured Amplitude	Amplitude Accuracy
Setting	Actual	Setting	Actual			Test Record Entry
0 dB	50 dB	50 dB		–50 dBm		13)

3. Perform the following steps for each of the nominal amplitude values listed in Table 2-33:

   a. Set the 1 dB step attenuator as indicated in Table 2-33.
   b. Set the 10 dB step attenuator as indicated in Table 2-33.

ManualsPlus.com

c. Press **Single** and wait for the sweep to finish.
d. Press **Peak Search** (or **Search**). Even though the signal may be slightly above the reference level for the first nominal amplitude setting, the marker can still make a valid measurement.
e. Record the marker (`Mkr1`) amplitude value as the measured amplitude in Table 2-33.
f. Calculate the amplitude accuracy as follows:

$$\text{Amplitude Accuracy} = \text{Measured Amplitude} - (\text{Amptd}_{0\text{dBm}} - \text{ActualTotalAtten} + \text{RefAtten}_{0\text{dB}})$$

g. Record the amplitude accuracy in the performance verification test record as indicated in Table 2-33.

ManualsPlus.com

20. Overall Absolute Amplitude Accuracy: Agilent E4402B, E4403B, E4404B, E4405B, E4407B, and E4408B

This test measures the absolute amplitude of the analyzer at 50 MHz. A synthesized signal generator and attenuators are used as the signal source to the analyzer. A power meter is used to measure this signal source with the attenuators set to 0 dB. The value measured is recorded as the source amplitude. The attenuators are used to adjust the signal levels applied to the analyzer from the initial signal amplitude (set with the power meter) and –50 dBm. The amplitude measured by the analyzer is compared to the actual signal level and the amplitude error is calculated.

There are no related adjustment procedures for this performance test.

Equipment Required

Synthesized signal generator
10 dB step attenuator
1 dB step attenuator
Attenuator interconnection kit
Attenuator driver (if programmable step attenuators are used)
6 dB fixed attenuator (*2 required*)
Power meter
RF power sensor
Cable, Type-N, 62 cm (24 in.) (m) (*2 required*)
Cable, BNC
Adapter, Type-N (f) to Type-N (f)

Additional Equipment for Option BAB

Adapter, Type N (f) to APC 3.5 (f)

Procedure

Measuring 0 dBm Reference Level

1. Press **Preset** on the analyzer. Press the **Factory Preset** softkey, if it is displayed.
2. Connect a BNC cable from AMPTD REF OUT to the 50 Ω Input connector using a Type N (m) to BNC (f) adapter.
3. Perform a complete self-alignment and set Auto Align Off. Press **System, Alignments, Align Now, All**, and wait for the alignment routine to finish. Then, press **Return, Auto Align, Off**.

ManualsPlus.com

4. Zero and calibrate the power meter and power sensor connected to Channel A of the power meter.
5. Connect the equipment as shown in Figure 2-23. The power sensor should connect directly to the 6 dB fixed attenuator using an adapter.

Figure 2-23 Measure Source Test Setup

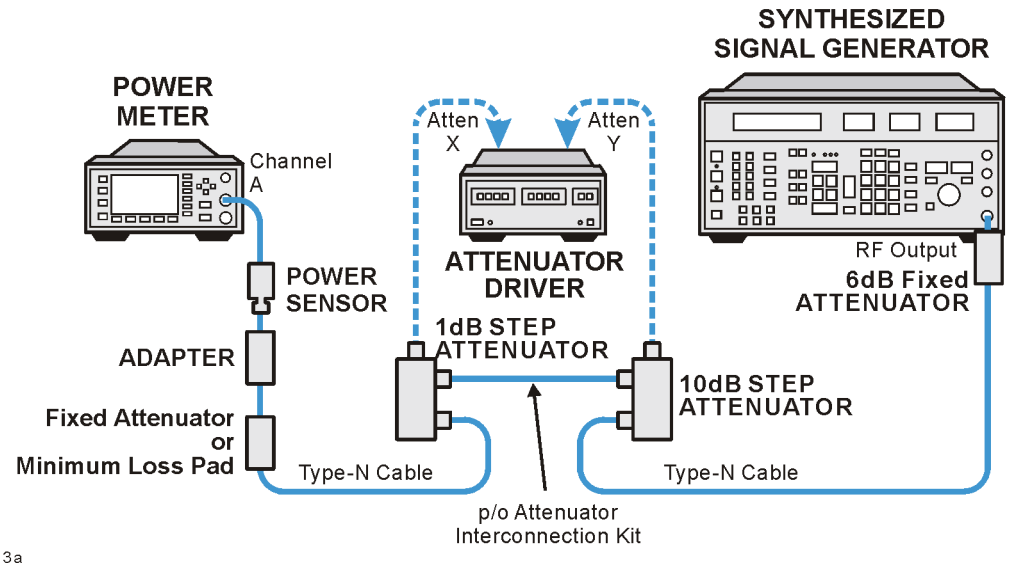

6. **Preset** the synthesized signal generator. Manually press **Blue Key, Special, 0, 0**. Set the signal generator as follows:

   FREQUENCY, 50 MHz
   AMPLITUDE, 12 dBm

7. Set the 10 dB and 1 dB step attenuators to 0 dB.
8. Obtain the actual attenuation for the 0 dB setting of each attenuator at 50 MHz from the metrology data for the step attenuators. In some cases this value might be zero, by definition. Add the two actual attenuations to obtain the 0 dB reference attenuation.

$$\text{RefAtten}_{0dB} = 10\text{ dB Actual}_{0dB} + 1\text{ dB Actual}_{0dB}$$

   For example, if the actual attenuation for the 10 dB step attenuator is 0.03 dB, 10 dB Actual_{0dB} is 0.03 dB. If the actual attenuation for the 1 dB step attenuator is 0.02 dB, 1 dB Actual_{0dB} is 0.02 dB. In this case RefAtten_{0dB} is 0.05 dB.

9. Obtain the metrology data for the step attenuators at 50 MHz. Enter the actual attenuation values for each attenuator setting as indicated in Table 2-34. If using a programmable attenuator, the section three 40 dB step should be used for the 40 dB setting on the 10 dB step attenuator. Similarly, the section three 4 dB step should

ManualsPlus.com

be used for the 4 dB setting on the 1 dB step attenuator.

Table 2-34 Amplitude Accuracy Worksheet, 0 dBm Reference Level

1 dB Step Attenuator		10 dB Step Attenuator		Total Attenuation		Nominal Amptd.	Meas. Amptd.	Amptd. Accuracy Test Record Entry
Setting	Actual	Setting	Actual	Setting	Actual			
0 dB		0 dB		0 dB		0 dBm		1)
0 dB		10 dB		10 dB		–10 dBm		2)
0 dB		20 dB		20 dB		–20 dBm		3)
0 dB		30 dB		30 dB		–30 dBm		4)
0 dB		40 dB		40 dB		–40 dBm		5)
0 dB		50 dB		50 dB		–50 dBm		6)

10. Calculate the actual total attenuation by adding the actual attenuation for the 1 dB step attenuator to the actual attenuation for the 10 dB step attenuator for each total attenuation setting listed in Table 2-34.

NOTE The external attenuators and cables are now part of the “source.”

11. Adjust the signal generator amplitude for a power meter reading of 0 dBm ±0.2 dB. Record the power meter reading here:

    $Amptd_{0dBm}$ = _____ dBm

12. Connect the equipment as indicated in Figure 2-24. The fixed attenuator must connect directly to the analyzer input.

ManualsPlus.com

Figure 2-24 Amplitude Accuracy Test Setup

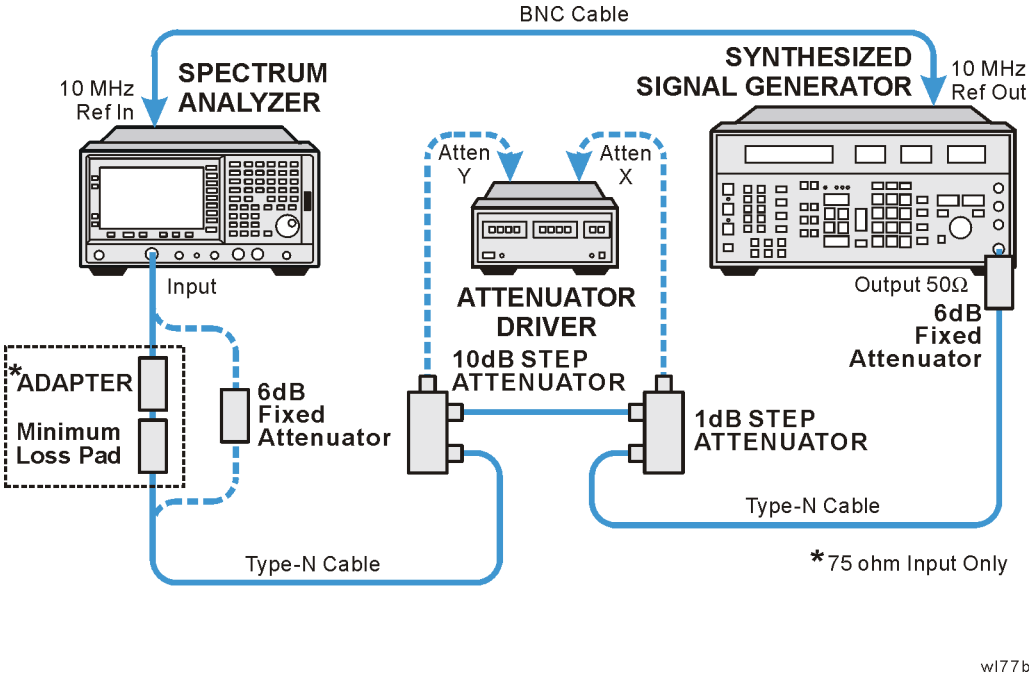

13. Set the analyzer as follows:

FREQUENCY, Center Freq, 50 MHz
SPAN, 6 kHz
BW/Avg, Res BW, 1 kHz

AMPLITUDE, Ref Level, 0 dBm
Attenuation, 10 dB (Man)

14. Perform the following steps for each of the nominal amplitude values listed in Table 2-34:

a. Set the 1 dB step attenuator as indicated in Table 2-34.
b. Set the 10 dB step attenuator as indicated in Table 2-34.
c. Press **Single** and wait for the sweep to finish.
d. Press **Peak Search** (or **Search**). Even though the signal may be slightly above the reference level for the first nominal amplitude setting, the marker can still make a valid measurement.
e. Record the marker (`Mkr1`) amplitude value as the measured amplitude in Table 2-34.
f. If the nominal amplitude is 0 dBm, calculate the amplitude accuracy as follows:

$$\text{Amplitude Accuracy} = \text{Measured Amplitude} - \text{Amptd}_{0dBm}$$

g. If the amplitude is less than 0 dBm, calculate the amplitude accuracy as follows:

$$\text{Amplitude Accuracy} = \text{Measured Amplitude} - (\text{Amptd}_{0dBm} - \text{ActualTotalAtten} + \text{RefAtten}_{0dB})$$

h. Record the amplitude accuracy in the performance verification test record as indicated in Table 2-34.

ManualsPlus.com

Measuring –20 dBm Reference Level

1. Press **AMPLITUDE**, **Ref Level**, **–20 dBm**.
2. Copy the actual total attenuation values from Table 2-34 into the actual total attenuation column in Table 2-35. Not all values in Table 2-34 will be required in Table 2-35.

Table 2-35 Amplitude Accuracy Worksheet, –20 dBm Reference Level

1 dB Step Attenuator	10 dB Step Attenuator	Total Attenuation		Nominal Amplitude	Measured Amplitude	Amplitude Accuracy
Setting	Actual	Setting	Actual			Test Record Entry
0 dB	20 dB	20 dB		–20 dBm		7)
0 dB	30 dB	30 dB		–30 dBm		8)
0 dB	40 dB	40 dB		–40 dBm		9)
0 dB	50 dB	50 dB		–50 dBm		10)

3. Perform the following steps for each of the nominal amplitude values listed in Table 2-35:
   a. Set the 1 dB step attenuator as indicated in Table 2-35.
   b. Set the 10 dB step attenuator as indicated in Table 2-35.
   c. Press **Single** and wait for the sweep to finish.
   d. Press **Peak Search** (or **Search**). Even though the signal may be slightly above the reference level for the first nominal amplitude setting, the marker can still make a valid measurement.
   e. Record the marker (`Mkr1`) amplitude value as the measured amplitude in Table 2-35.
   f. Calculate the amplitude accuracy as follows:
   $$\text{Amplitude Accuracy} = \text{Measured Amplitude} - (\text{Amptd}_{0dBm} - \text{ActualTotalAtten} + \text{RefAtten}_{0dB})$$
   g. Record the amplitude accuracy in the performance verification test record as indicated in Table 2-35.

Measuring –40 dBm Reference Level

1. Press **AMPLITUDE**, **Ref Level**, **–40 dBm**.
2. Copy the actual total attenuation values from Table 2-34 into the actual total attenuation column in Table 2-36. Not all values in

ManualsPlus.com

Table 2-34 will be required in Table 2-36.

Table 2-36 Amplitude Accuracy Worksheet, –40 dBm Reference Level

1 dB Step Attenuator	10 dB Step Attenuator	Total Attenuation		Nominal Amplitude	Measured Amplitude	Amplitude Accuracy
Setting	Actual	Setting	Actual			Test Record Entry
0 dB	40 dB	40 dB		–40 dBm		11)
0 dB	50 dB	50 dB		–50 dBm		12)

3. Perform the following steps for each of the nominal amplitude values listed in Table 2-36:
   a. Set the 1 dB step attenuator as indicated in Table 2-36.
   b. Set the 10 dB step attenuator as indicated in Table 2-36.
   c. Press **Single** and wait for the sweep to finish.
   d. Press **Peak Search** (or **Search**). Even though the signal may be slightly above the reference level for the first nominal amplitude setting, the marker can still make a valid measurement.
   e. Record the marker (`Mkr1`) amplitude value as the measured amplitude in Table 2-36.
   f. Calculate the amplitude accuracy as follows:
   $$\text{Amplitude Accuracy} = \text{Measured Amplitude} - (\text{Amptd}_{0dBm} - \text{ActualTotalAtten} + \text{RefAtten}_{0dB})$$
   g. Record the amplitude accuracy in the performance verification test record as indicated in Table 2-36.

Measuring –50 dBm Reference Level

1. Press **AMPLITUDE**, **Ref Level**, **–50 dBm**.
2. Copy the actual total attenuation values from Table 2-34 into the actual total attenuation column in Table 2-37. Not all values in Table 2-34 will be required in Table 2-37.

Table 2-37 Amplitude Accuracy Worksheet, –50 dBm Reference Level

1 dB Step Attenuator	10 dB Step Attenuator	Total Attenuation		Nominal Amplitude	Measured Amplitude	Amplitude Accuracy
Setting	Actual	Setting	Actual			Test Record Entry
0 dB	50 dB	50 dB		–50 dBm		13)

3. Perform the following steps for each of the nominal amplitude values listed in Table 2-37:

ManualsPlus.com

a. Set the 1 dB step attenuator as indicated in Table 2-37.
b. Set the 10 dB step attenuator as indicated in Table 2-37.
c. Press **Single** and wait for the sweep to finish.
d. Press **Peak Search** (or **Search**). Even though the signal may be slightly above the reference level for the first nominal amplitude setting, the marker can still make a valid measurement.
e. Record the marker (`Mkr1`) amplitude value as the measured amplitude in Table 2-37.
f. Calculate the amplitude accuracy as follows:

$$\text{Amplitude Accuracy} = \text{Measured Amplitude} - (\text{Amptd}_{0dBm} - \text{ActualTotalAtten} + \text{RefAtten}_{0dB})$$

g. Record the amplitude accuracy in the performance verification test record as indicated in Table 2-37.

ManualsPlus.com

21. Resolution Bandwidth Accuracy

The output of a synthesized signal generator is connected to the Input of the analyzer, characterized through a 1 dB step attenuator set to 3 dB. The amplitude of the synthesized signal generator is set to a reference amplitude 5 dB below the top of the screen. A marker reference is set and the attenuator is set to 0 dB.

The markers of the analyzer are then used to measure the 3 dB bandwidth. The first marker is set on the left filter skirt so that the marker delta amplitude is 1 dB plus the attenuator error for the 3 dB setting. The second marker is similarly set on the right filter skirt. The frequency difference between the two markers is the 3 dB bandwidth.

Resolution bandwidth settings £300 Hz (Option 1DR) are not measured. These bandwidths are digitally derived; therefore, their accuracy is verified by design.

The related adjustment for this performance test is “IF Amplitude.”

Equipment Required

Synthesized signal generator
Cable, BNC, 122-cm (48-in)
Cable, Type-N, 152-cm (60-in) (*2 required*)
1 dB step attenuator
Attenuator/switch driver (if programmable step attenuators are used)

Additional Equipment for 75 Ω Input

Pad, minimum loss
Adapter, Type-N (f), to BNC (m), 75 Ω

Additional Equipment for Option BAB

Adapter, Type-N (f), to APC 3.5 (f)

ManualsPlus.com

Figure 2-25 Resolution Bandwidth Accuracy Test Setup

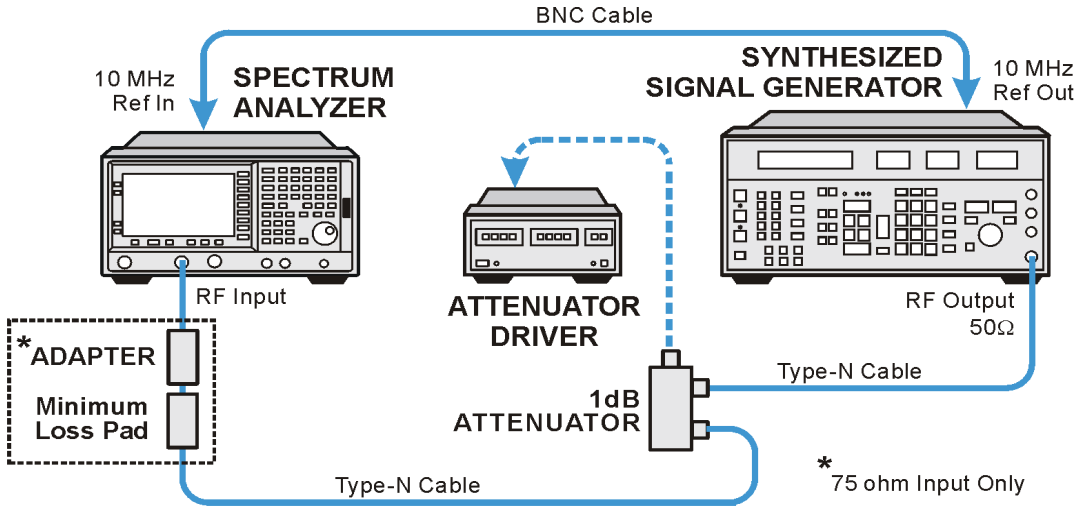

wl738a

CAUTION Use only 75 Ω cables, connectors, or adapters on instruments with 75 Ω connectors, or the connectors will be damaged.

Procedure

1. Connect the equipment as shown in Figure 2-25.
2. On the synthesized signal generator, press **Blue Key, Special, 0, 0** and set the controls as follows:

   FREQUENCY, 50 MHz
   AMPLITUDE, 0 dBm (50 Ω *Input only)*
   AMPLITUDE, 6 dBm (75 Ω Input only)

3. Press **Preset** on the analyzer. Press the **Factory Preset** softkey, if it is displayed. Press **System, Alignments, Auto Align, Off**. Set the analyzer by pressing the following keys:

   FREQUENCY, 50 MHz
   SPAN, 7.5 MHz
   AMPLITUDE, Scale/Div 1 dB
   AMPLITUDE, Y Axis Units (or **Amptd Units**), **dBm**
   BW/Avg, 5 MHz
   BW/Avg, Video BW, 30 Hz

4. Set the 1 dB step attenuator to 3 dB.
5. Note the error of the external 1 dB step attenuator at 3 dB and 6 dB below using its calibration records.

   Attenuator Error (3 dB) _____ dB

ManualsPlus.com

Attenuator Error (6 dB) _____ dB

3 dB Resolution Bandwidth Accuracy

6. Press **Peak Search** (or **Search**), **Meas Tools, Mkr→ CF** on the analyzer.
7. Adjust the amplitude of the synthesized signal generator for a marker amplitude reading of –5 dBm ±0.2 dB.
8. Press **Peak Search** (or **Search**), **Marker**, **Delta** on the analyzer.
9. Set the attenuator to 0 dB.
10. On the analyzer, press **Marker**. Lower the marker frequency by adjusting the knob until the marker delta amplitude is 0 dB plus the attenuator error (3 dB) noted in step 5 to a tolerance of ±0.05 dB.
11. Record the marker frequency readout in Column 3 of Table 2-38.
12. Using the analyzer knob, raise the marker frequency so that the marker delta amplitude is maximum. Continue increasing the marker frequency until the marker reads 0.0 dB plus the attenuator error (3 dB) noted in step 5 to a tolerance of ±0.05 dB.
13. Record the marker frequency readout in Column 4 of Table 2-38.
14. Set the attenuator to 3 dB.
15. Press **Marker**, **Normal** on the analyzer.
16. Repeat step 6 through step 15 for each of the analyzer Res BW and Analyzer Span settings listed in Table 2-38.
17. Subtract the Lower Marker Frequency from the Upper Marker Frequency. Record the difference as the 3 dB Bandwidth, in the performance verification test record as indicated in Table 2-38.

    3 db Bandwidth = Upper Marker Frequency – Lower Marker

ManualsPlus.com

Frequency

Table 2-38 3 dB Resolution Bandwidth Accuracy

Column 1	Column 2	Column 3	Column 4	Column 5
Analyzer Res BW	**Analyzer Span**	**Lower Marker Frequency**	**Upper Marker Frequency**	**Test Record Entry 3 dB Bandwidth**
5 MHz	7.5 MHz			1)
3 MHz	4.5 MHz			2)
1 MHz	1.5 MHz			3)
300 kHz	450 kHz			4)
100 kHz	150 kHz			5)
30 kHz	45 kHz			6)
10 kHz	15 kHz			7)
3 kHz	4.5 kHz			8)
1 kHz	1.5 kHz			9)

6 dB Resolution Bandwidth Accuracy

18. Set the analyzer Res BW to 120 kHz and the analyzer span to 180 kHz as shown in Table 2-39.
19. On the analyzer, press **Peak Search** (or **Search**), **Meas Tools, Mkr→ CF**.
20. Set the external 1 dB step attenuator to 6 dB and adjust the amplitude of the synthesized signal generator for a marker amplitude reading of –7 dBm ±0.2 dB.
21. Press **Peak Search** (or **Search**), **Marker**, **Delta** on the analyzer.
22. Set the attenuator to 0 dB.
23. On the analyzer, press **Marker**. Lower the marker frequency by adjusting the knob until the marker delta amplitude is 0 dB plus the attenuator error (6 dB) noted in step 5 to tolerance of ±0.05 dB.
24. Record the marker frequency readout in Column 3 of Table 2-39.
25. Using the analyzer knob, raise the marker frequency so that the marker delta amplitude is maximum. Continue increasing the marker frequency until the marker reads 0.0 dB plus the attenuator error (6 dB) noted in step 5 to a tolerance of ±0.05 dB.
26. Record the marker frequency readout in Column 4 of Table 2-39.
27. Set the attenuator to 6 dB.

ManualsPlus.com

28. Press **Marker**, **Normal** on the analyzer.

29. Repeat step 19 through step 28 for each of the analyzer Res BW and analyzer span settings listed in Table 2-39.

30. Subtract the Lower Marker Frequency from the Upper Marker Frequency. Record the difference as the 6 dB bandwidth, in the performance verification test record as indicated in Table 2-39.

6 dB Bandwidth = Upper Marker Frequency – Lower Marker Frequency

Table 2-39 6 dB Resolution Bandwidth Accuracy

Column 1	Column 2	Column 3	Column 4	Column 5
Analyzer Res BW	**Analyzer Span**	**Lower Marker Frequency**	**Upper Marker Frequency**	**Test Record Entry 3 dB Bandwidth**
120 kHz	180 kHz			10)
9 kHz	13.5 kHz			11)

Post-test Instrument Restoration

31. Remove the RF cable from the analyzer input connector.

32. Press **Preset** on the analyzer. Press the **Factory Preset** softkey, if it is displayed. Press System, **Alignments, Auto Align, All**.

ManualsPlus.com

22. Frequency Response: Agilent E4401B and E4411B

This test measures the amplitude error of the analyzer as a function of frequency. To measure frequencies of 100 kHz and greater, the output of a signal generator is fed through a power splitter to a power sensor and the analyzer.

To measure frequencies below 100 kHz, a digital voltmeter (DVM) with a 50 Ω load replaces the power sensor and a function generator is used as the source.

For improved amplitude accuracy, the power splitter is characterized using a power sensor (the “reference” sensor) connected to one power splitter output port. The other power splitter output port connects to the “buried” sensor; it is not removed from the power splitter. Once the characterization is done, the reference sensor is removed and replaced by the analyzer.

This procedure does not test frequency response with the optional preamplifier (Option 1DS) turned on. If the analyzer is equipped with Option 1DS, also perform the “Frequency Response, Preamp On” procedure.

The related adjustment for this performance test is “Frequency Response.”

Analyzers with 75 Ω inputs are tested down to 1 MHz only.

Equipment Required

Synthesized signal generator
Function generator
Power meter
RF power sensor, (*2 required*)
RF Power splitter
Digital multimeter
Adapter, Type-N (m) to Type-N (m)
Adapter, Type-N (m) to BNC (f)
Dual banana plug to BNC (f)
BNC Tee (BNC f,m,f)
Cable, BNC, 120-cm (48-in) (*2 required*)
Cable, Type-N, 183-cm (72-in)
Termination, 50 Ω, BNC (m)

ManualsPlus.com

Additional Equipment for 75 Ω Input

Power sensor, 75 Ω
Minimum Loss Pad, Type-N (f) 75 Ω to Type-N (m) 50 Ω
Adapter, Type-N (m) to BNC (m), 75 Ω

CAUTION Use only 75 Ω cables, connectors, or adapters on instruments with 75 Ω connectors, or damage to the connectors will occur.

Procedure

Source/Splitter Characterization

1. Connect the equipment as shown in Figure 2-26. Connect one of the Agilent 8482A power sensors to Channel A of the power meter. This will be the "reference" sensor. Connect the other Agilent 8482A power sensor to Channel B of the power meter. This will be the "buried" sensor.

   75 Ω Inputs, Option 1DP: Connect the Agilent 8483A power sensor to Channel A of the power meter. This will be the "reference" sensor.

Figure 2-26 Source/Splitter Characterization Setup

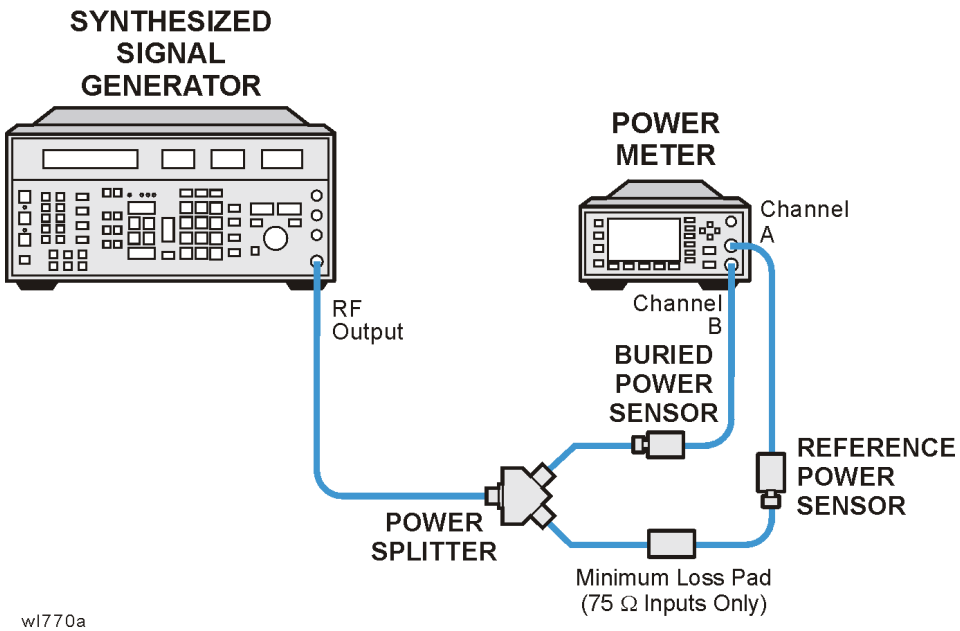

2. Zero and calibrate both power sensors.
3. On the power meter, set the Channel A calibration factor to the

ManualsPlus.com

calibration factor of the reference sensor for 100 kHz.

75 Ω Inputs, Option 1DP: Use the calibration factor of the reference sensor for 1 MHz.

4. On the power meter, set the Channel B calibration factor to 100%. Do not change this calibration factor during this test.
5. Set the source frequency to 100 kHz and amplitude to –4 dBm.

   75 Ω Inputs, Option 1DP: Set the source frequency to 1 MHz and amplitude to 2 dBm.
6. Adjust the source amplitude to obtain a Channel A power meter reading of –10 dBm ±0.1 dB.
7. Record the source amplitude setting, and both the Channel A and Channel B power meter readings in Table 2-40.
8. Tune the source to the next frequency in Table 2-40.
9. On the power meter, set the Channel A calibration factor to the calibration factor of the reference sensor for the current source frequency.
10. Adjust the source amplitude to obtain a Channel A power meter reading of –10 dBm ±0.1 dB.
11. Record the source amplitude setting, and both the Channel A and Channel B power meter readings in Table 2-40.
12. Repeat step 8 through step 11 for each frequency in Table 2-40.
13. For each entry in Table 2-40, calculate the Splitter Tracking Error as follows:

    Splitter Tracking Error = Channel A Power – Channel B Power

    For example, if Channel A Power is –10.05 dBm and Channel B Power is –10.23 dBm, the Splitter Tracking Error is 0.18 dB.

NOTE Tracking errors are nominally –5.7 dB when using the minimum loss pad.

ManualsPlus.com

Table 2-40 Source/Splitter Characterization

Frequency	Power Meter Reading		Splitter Tracking Error (dB)	Source Power Setting (dBm)
	Channel A (dBm)	Channel B (dBm)		
100 kHz[a]				
500 kHz[a]				
1 MHz				
5 MHz				
10 MHz				
20 MHz				
50 MHz				
75 MHz				
175 MHz				
275 MHz				
375 MHz				
475 MHz				
575 MHz				
675 MHz				
775 MHz				
825 MHz				
875 MHz				
925 MHz				
975 MHz				
1025 MHz				
1075 MHz				
1175 MHz				
1275 MHz				
1375 MHz				
1500 MHz				

a. These values do not apply to analyzers with 75 Ω inputs (Option 1DP).

ManualsPlus.com

Measuring Frequency Response, 100 kHz to 1.5 GHz

1. Refer to Figure 2-27. Remove the reference sensor (Channel A sensor) from the power splitter. Connect the power splitter to the analyzer 50 Ω Input using an adapter. Do not use a cable.

Figure 2-27 Frequency Response Test Setup, 100 kHz to 1.5 GHz

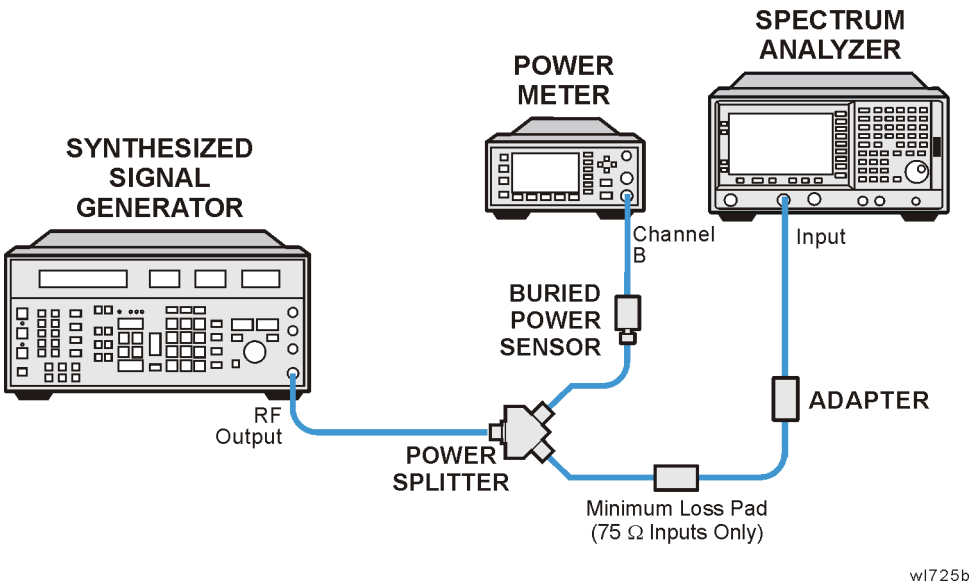

75 Ω inputs, Option 1DP: Connect the power splitter to the analyzer 75 Ω Input using a mechanical adapter and a 75 Ω, Type-N(m) to BNC(m) adapter.

2. Set the source frequency to 100 kHz:

   75 Ω inputs, Option 1DP: Set the source frequency to 1 MHz.

3. Set the source amplitude to the value corresponding to the source power setting in Table 2-41 for the current source frequency (100 kHz or 1 MHz).

4. Press **Preset** on the analyzer. Press the **Factory Preset** softkey, if it is displayed. Set the controls as follows:

   FREQUENCY, Center Freq, 100 kHz (*50* Ω Input)
   FREQUENCY, Center Freq, 1 MHz (*75* Ω Input)
   CF Step, 100 MHz
   SPAN, 20 kHz
   AMPLITUDE, More, Int Preamp (Off) (*Option 1DS only*)
   AMPLITUDE, **More**, **Y Axis Units** (or **Amptd Units**), **dBm**
   AMPLITUDE, **Ref Level**, **–5 dBm**
   Attenuation, 10 dB (Man)
   Scale/Div, 1 dB
   BW/Avg, Res BW, 3 kHz (Man)

ManualsPlus.com

Video BW, 3 kHz (Man)

5. Adjust the source AMPLITUDE to obtain the Channel B power meter reading recorded in Table 2-40 ±0.1 dB.
6. Record the current Channel B power reading in Table 2-41 as the Current Channel B reading.
7. On the analyzer, press **Single** then **Peak Search** (or **Search**).
8. Record the marker (`Mkr1`) amplitude reading in Table 2-41.
9. Set the source to the next frequency listed in Table 2-41.
10. Set the analyzer center frequency to the next frequency listed in Table 2-41.
11. Adjust the source AMPLITUDE to obtain the Channel B power meter reading recorded in Table 2-40 ±0.1 dB for the current frequency.
12. Record the current Channel B power meter reading in Table 2-41 as the Current Channel B Reading.
13. On the analyzer, press **Single** then **Peak Search** (or **Search**).
14. Record the marker (`Mkr1`) amplitude reading in Table 2-41.
15. Repeat step 9 through step 14 for each frequency in Table 2-41.
16. Copy the splitter tracking errors from Table 2-40 into Table 2-41.
17. Calculate the Flatness Error for each frequency in Table 2-41 as follows:

    $$\text{Flatness Error} = \text{Mkr1 Amptd}_{\text{dBm}} - \text{Current Channel B}_{\text{dBm}} - \text{Splitter Tracking Error}_{\text{dB}}$$

    For example, if marker (`Mkr1`) Amptd is –10.32 dBm, Current Channel B is –10.2 dBm and Splitter Tracking Error is 0.18 dB, Flatness Error would be –0.30 dB.
18. Record the Flatness Error for 50 MHz below as the 50 MHz Ref Amptd:

    50 MHz Ref Amptd _____
19. Calculate the Flatness Relative to 50 MHz for each frequency in Table 2-41 as follows:

    Flatness Relative to 50 MHz = Flatness Error – 50 MHz Ref Amptd

    For example, if Flatness Error is –0.30 dB and 50 MHz Ref Amptd is

ManualsPlus.com

0.15 dB, Flatness Relative to 50 MHz would be –0.45 dB.

Table 2-41 Frequency Response Worksheet, 100 kHz to 1.5 GHz

Frequency	Current Channel B Reading	Marker (Mkr1) Amplitude	Splitter Tracking Error	Flatness Error	Flatness Relative to 50 MHz
100 kHz[a]					
500 kHz[a]					
1 MHz					
5 MHz					
10 MHz					
20 MHz					
50 MHz					
75 MHz					
175 MHz					
275 MHz					
375 MHz					
475 MHz					
575 MHz					
675 MHz					
775 MHz					
825 MHz					
875 MHz					
925 MHz					
975 MHz					
1025 MHz					
1075 MHz					
1175 MHz					
1275 MHz					
1375 MHz					
1500 MHz					

a. These values do not apply to analyzers with 75 Ω inputs (Option 1DP).

ManualsPlus.com

Measuring Frequency Response, ≤100 kHz

If the analyzer has Option 1DP, skip to the Test Results section.

1. Connect the equipment as shown in Figure 2-28.

Figure 2-28 Frequency Response Test Setup, ≤100 kHz

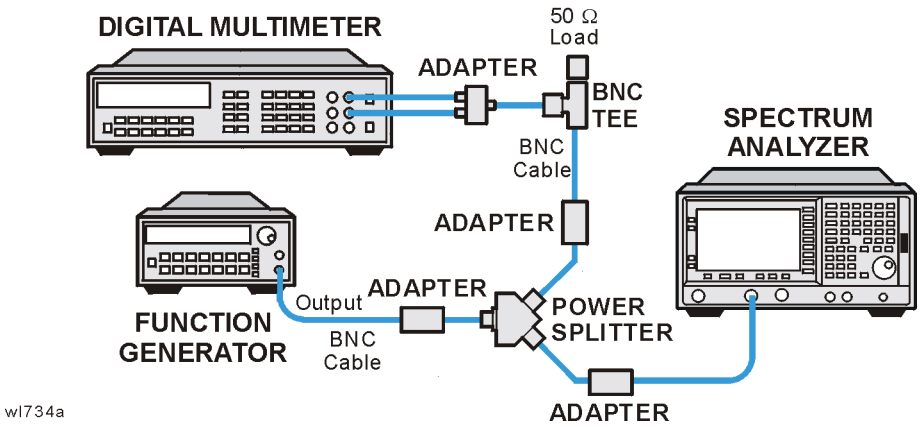

2. Set the function generator controls as follows:

   FREQUENCY, **100 kHz**
   AMPLITUDE, **–4 dBm**

3. Set the DVM as follows:

Function	Synchronous ac Volts
Math	dBm
RES Register	50 Ω
Front/Rear Terminals	Front
Range	Auto

4. On the analyzer, press **FREQUENCY**, **100 kHz**.
5. Adjust the function generator amplitude until the DVM reading is –10 dBm ±0.1 dB.
6. Record the actual DVM reading in Table 2-42 as the DVM amplitude reading.
7. On the analyzer, press **Peak Search** (or **Search**), **Marker, Delta**.
8. Set the analyzer center frequency to the next frequency listed in Table 2-42.
9. Set the function generator frequency to the next frequency listed in Table 2-42.

ManualsPlus.com

10. On the analyzer, press **Peak Search** (or **Search**).
11. Adjust the function generator amplitude until the marker delta (Δ `Mkr1`) amplitude reads 0 dB ±0.05 dB.
12. Record the DVM reading in Table 2-42 as the DVM amplitude reading.
13. Repeat step 8 through step 12 for each frequency in Table 2-42.
14. For each of the frequencies in Table 2-42, subtract the DVM amplitude from the DVM Amplitude at 100 kHz recorded in step 6. Record the result as the Response Relative to 100 kHz in Table 2-42.
15. From Table 2-41, note the Flatness Relative to 50 MHz for the 100 kHz frequency. Record this below as the 100 kHz error relative to 50 MHz:

    100 kHz Error Relative to 50 MHz _____ dB

16. Add the 100 kHz error relative to 50 MHz that was recorded in step 15 above to each of the Response Relative to 100 kHz entries in Table 2-42. Record the results as the Response Relative to 50 MHz in Table 2-42.

Table 2-42 **Frequency Response Worksheet,** ≤100 kHz

Frequency	DVM Amplitude	Response Relative to 100 kHz	Response Relative to 50 MHz
100 kHz		0 dB (Ref)	
75 kHz			
50 kHz			
20 kHz			
9 kHz			

Test Results

1. Enter the most positive number from the Flatness Relative to 50 MHz column of Table 2-41:

   _____ dB

2. Enter the most positive number from the Response Relative to 50 MHz column of Table 2-42:

   _____ dB

   75 Ω inputs, Option 1DP: The frequency range below 100 kHz was not tested; no entry from Table 2-42 is necessary.

3. Record the more positive of numbers from step 1 and step 2 in Table 2-43 as the Maximum Response for Band 0.

ManualsPlus.com

4. Enter the most negative number from the Flatness Relative to 50 MHz column of Table 2-41:

   _____ dB

5. Enter the most negative number from the Response Relative to 50 MHz column of Table 2-42:

   _____ dB

   75 Ω inputs, Option 1DP: The frequency range below 100 kHz was not tested; no entry from Table 2-42 is necessary.

6. Record the more negative of numbers from step 4 and step 5 in Table 2-43 as the Minimum Response for Band 0.

7. Subtract the Minimum Response for Band 0 from the Maximum Response for Band 0 and record the result as the Peak-to-Peak Response for Band 0 in Table 2-43.

Table 2-43 Frequency Response Results

Band	Maximum Response		Minimum Response		Peak-to-Peak Response	
	dB	Test Record Entry	dB	Test Record Entry	dB	Test Record Entry
0		1)		2)		3)

ManualsPlus.com

23. Frequency Response, Agilent E4402B and E4403B

This test measures the amplitude error of the analyzer as a function of frequency. To measure frequencies of 100 kHz and greater, the output of a source is fed through a power splitter to a power sensor and the analyzer. A function generator is used as the source from 100 kHz to 10 MHz, and a synthesized sweeper at 10 MHz and greater. To measure frequencies below 100 kHz, a DVM with a 50 Ω load replaces the power sensor.

For improved amplitude accuracy the power splitter is characterized using a “reference” sensor connected to one power splitter output port. The other power splitter output port connects to the “buried” sensor; it is not removed from the power splitter. Once the characterization is done, the reference sensor is removed and replaced by the analyzer. Measurements are made at the same frequencies used in the characterization. The analyzer marker amplitude measurements are corrected using the characterization data to determine the absolute flatness error and the flatness error relative to 50 MHz.

This procedure does not test frequency response with the optional preamplifier (Option 1DS) turned on. If the analyzer is equipped with Option 1DS, also perform the “Frequency Response, Preamp On” procedure. Analyzers with Option UKB are tested down to 100 Hz in dc coupled mode. In ac coupled mode, Agilent E4402B analyzers are tested down to 100 kHz.

The related adjustment for this performance test is “Frequency Response.”

Equipment Required

Synthesized sweeper
Function generator
Power meter
RF power sensor (*2 required*)
RF Power splitter
Digital multimeter
Adapter, Type-N (m) to Type-N (m)
Adapter, Type-N (m) to BNC (f)
Dual banana plug to BNC (f)
BNC Tee (BNC f,m,f)
Cable, BNC, 122-cm (48-in) (*2 required*)
Cable, Type-N, 183-cm (72-in)
Termination, 50 Ω, BNC (m)

ManualsPlus.com

Procedure

Source/Splitter Characterization

1. Connect the equipment as shown in Figure 2-29; use the function generator as the source. Connect one of the Agilent 8482A power sensors to Channel A of the power meter. This will be the “reference” sensor. Connect the other Agilent 8482A power sensor to Channel B of the power meter. This will be the “buried” sensor.

Figure 2-29 Source/Splitter Characterization Setup

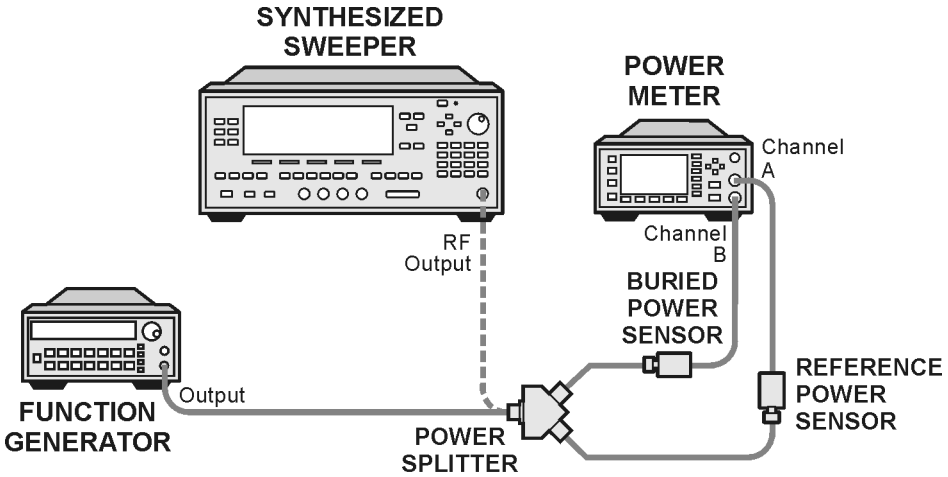

wl713b

2. Zero and calibrate both power sensors.
3. On the power meter, set the Channel A calibration factor to the calibration factor of the reference sensor for 100 kHz.
4. On the power meter, set the Channel B calibration factor to 100%. Do not change this calibration factor during this test.
5. Set the function generator frequency to 100 kHz and amplitude to –4 dBm.
6. Adjust the function generator amplitude to obtain a Channel A power meter reading of –10 dBm ±0.1 dB.
7. Record the function generator amplitude setting, and both the Channel A and Channel B power meter readings in Table 2-44.
8. Tune the source to the next frequency in Table 2-44.
9. On the power meter, set the Channel A calibration factor to the calibration factor of the reference sensor for the current source frequency.

ManualsPlus.com

10. Adjust the source amplitude to obtain a Channel A power meter reading of –10 dBm ±0.1 dB.
11. Record the source amplitude setting, and both the Channel A and Channel B power meter readings in Table 2-44.
12. Repeat step 8 through step 11 for frequencies up through 10 MHz.
13. Replace the function generator with the synthesized sweeper.
14. Set the synthesized sweeper CW frequency to 10 MHz and the amplitude to –4 dBm.
15. Adjust the synthesized sweeper power level to obtain a Channel A power meter reading of –10 dBm ±0.1 dB.
16. Record the synthesized sweeper power level and both the Channel A and Channel B power meter readings in Table 2-44.
17. Repeat step 8 through step 11 for each remaining frequency in Table 2-44.
18. For each entry in Table 2-44, calculate the Splitter Tracking Error as follows:

    Splitter Tracking Error = Channel A Power – Channel B Power

    For example, if Channel A Power is –10.05 dBm and Channel B Power is –10.23 dBm, the Splitter Tracking Error is 0.18 dB.

Table 2-44 Source/Splitter Characterization

Frequency	Power Meter Reading		Splitter Tracking Error	Source Power Setting
	Channel A	Channel B		
100 kHz				
500 kHz				
1 MHz				
5 MHz				
10 MHz[a]				
10 MHz[b]				
20 MHz				0 dB (Ref)
50 MHz				
75 MHz				
175 MHz				
275 MHz				
375 MHz				

ManualsPlus.com

Table 2-44 Source/Splitter Characterization

Frequency	Power Meter Reading		Splitter Tracking Error	Source Power Setting
	Channel A	Channel B		
475 MHz				
575 MHz				
675 MHz				
775 MHz				
825 MHz				
875 MHz				
925 MHz				
975 MHz				
1025 MHz				
1075 MHz				
1175 MHz				
1275 MHz				
1375 MHz				
1500 MHz				
1525 MHz				
1625 MHz				
1675 MHz				
1725 MHz				
1775 MHz				
1825 MHz				
1875 MHz				
1925 MHz				
1975 MHz				
2025 MHz				
2125 MHz				
2325 MHz				
2525 MHz				
2725 MHz				

ManualsPlus.com

Table 2-44 Source/Splitter Characterization

Frequency	Power Meter Reading		Splitter Tracking Error	Source Power Setting
	Channel A	Channel B		
2925 MHz				
2999 MHz				

a. This entry is for data taken with the function generator as source.
b. This entry is for data taken with the synthesized sweeper as source.

Measuring Frequency Response, 100 kHz to 3.0 GHz

1. Refer to Figure 2-30. Remove the reference sensor (Channel A sensor) from the power splitter. Connect the power splitter to the 50 Ω Input of the analyzer using an adapter. Do not use a cable.

Figure 2-30 Frequency Response Test Setup, 100 kHz to 3.0 GHz

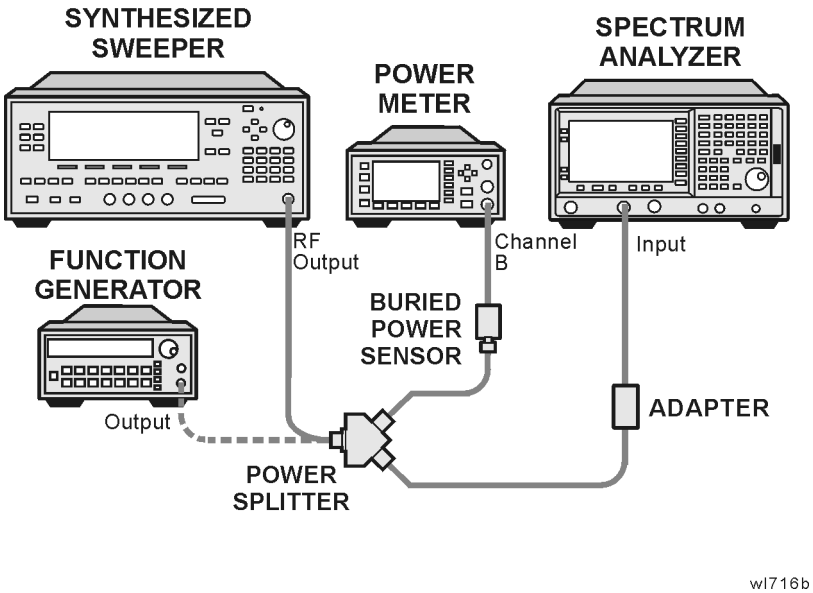

2. Set the source frequency to 10 MHz.
3. Set the source power level to the value corresponding to the source power setting in Table 2-44 for the current source frequency (10 MHz).
4. Press **Preset** on the analyzer. Press the **Factory Preset** softkey, if it is displayed. Set the controls as follows:

   FREQUENCY, Center Freq, 10 MHz

ManualsPlus.com

CF Step, 100 MHz
SPAN, 20 kHz
Input/Output (or Input), Coupling (DC) (Agilent E4402B, *Option UKB only*)
AMPLITUDE, More, Int Preamp, (Off) (*Option 1DS only*)
AMPLITUDE, **More**, **Y Axis Units** (or **Amptd Units**), **dBm**
AMPLITUDE, **Ref Level**, **–5 dBm**
Attenuation, 10 dB (Man)
Scale/Div, 1 dB
BW/Avg, Res BW, 3 kHz (Man)
Video BW, 3 kHz (Man)

5. Adjust the source power level to obtain the Channel B power meter reading recorded in Table 2-44 ±0.1 dB.
6. Record the current Channel B power reading in Table 2-45 as the Current Channel B Reading for dc (coupling).
7. On the analyzer, press **Single** then **Peak Search** (or **Search**).
8. Record the marker (`Mkr1`) amplitude reading in Table 2-45 for dc (coupling).
9. Set the source to the next frequency listed in Table 2-45.
10. Set the analyzer center frequency to the next frequency listed in Table 2-45.
11. Adjust the source power level to obtain the Channel B power meter reading recorded in Table 2-45 ±0.1 dB for the current frequency.
12. Record the current Channel B power reading in Table 2-45 as the current Channel B reading.
13. On the analyzer, press **Single** then **Peak Search** (or **Search**).
14. Record the marker (`Mkr1`) amplitude reading in Table 2-45.
15. Repeat step 9 through step 14 for each remaining frequency in Table 2-45.
16. Replace the synthesized sweeper with the function generator.
17. Set the function generator amplitude to –4 dBm.
18. Set the function generator frequency to 100 kHz.
19. On the analyzer, press **FREQUENCY**, **Center Freq**, **100 kHz**.
20. Adjust the function generator amplitude to obtain the Channel B power meter reading recorded in Table 2-44 ±0.1 dB for 100 kHz.
21. Record the current Channel B power reading in Table 2-45 as the current Channel B reading.
22. On the analyzer, press **Single** then **Peak Search** (or **Search**).
23. Record the analyzer marker (`Mkr1`) Amplitude Reading in Table 2-45

ManualsPlus.com

as marker (`Mkr1`) Amplitude.

24. Repeat step 18 through step 23 for frequencies between 100 kHz and 10 MHz.

25. Copy the Splitter Tracking Errors from Table 2-44 into Table 2-45.

26. Calculate the Flatness Error for each frequency in Table 2-45 as follows:

$$\text{Flatness Error} = \text{Mkr1 Amptd}_{dBm} - \text{Current Channel B}_{dBm} - \text{Splitter Tracking Error}_{dB}$$

For example, if marker (`Mkr1`) Amptd is –10.32 dBm, Current Channel B is –10.2 dBm and Splitter Tracking Error is 0.18 dB, Flatness Error would be –0.30 dB.

27. Record the Flatness Error for 50 MHz below as the 50 MHz Ref Amptd:

50 MHz Ref Amptd: _____

28. Calculate the setup change error (error due to changing the test setup from using a synthesized sweeper to using a function generator) as follows:

a. Record the Flatness Error from Table 2-45 at 10 MHz using the function generator as FlatError_{FG}:

FlatError_{FG}=_____ dB

b. Record the Flatness Error from Table 2-45 at 10 MHz using the synthesized sweeper as FlatError_{SS}:

FlatError_{SS}=_____ dB

c. Subtract FlatError_{SS} from FlatError_{FG} and record the result as the Setup Change Error:

$$\text{Setup Change Error} = \text{FlatError}_{FG} - \text{FlatError}_{SS}$$

Setup Change Error =_____ dB

29. For frequencies less than 10 MHz calculate the Flatness Relative to 50 MHz for each frequency in Table 2-45 as follows:

$$\text{Flatness Relative to 50 MHz} = \text{Flatness Error} - \text{50 MHz Ref Amptd} - \text{Setup Change Error}$$

For example, if Flatness Error is –0.30 dB, 50 MHz Ref Amptd is 0.15 dB and Setup Change Error is –0.19 dB, Flatness Relative to 50 MHz would be –0.26 dB.

30. For frequencies 10 MHz and greater, calculate the Flatness Relative to 50 MHz for each frequency in Table 2-45 as follows:

$$\text{Flatness Relative to 50 MHz} = \text{Flatness Error} - \text{50 MHz Ref Amptd}$$

ManualsPlus.com

For example, if Flatness Error is –0.30 dB and 50 MHz Ref Amptd is 0.15 dB, Flatness Relative to 50 MHz would be –0.45 dB.

31. If the analyzer has Option UKB, continue with this procedure. Otherwise, perform the procedure in "Measuring Frequency Response Less Than or Equal to 100 kHz."
32. Replace the function generator with the synthesized sweeper.
33. Set the source frequency to 10 MHz and the source power level to the value corresponding to the source power setting in Table 2-44 for the current source frequency (10 MHz).
34. For an Agilent E4402B only, press **Input/Output (or Input), Coupling** (AC) on the analyzer.
35. For an Agilent E4402B only, repeat step 5 through step 30 for ac coupling.
36. Perform the procedure in "Measuring Frequency Response Less Than or Equal to 100 kHz."

Table 2-45 Frequency Response Worksheet, 100 kHz to 3.0 GHz

Freq. (MHz)	Splitter Tracking Error	Current Channel B Reading		Marker (Mkr1) Amptd		Flatness Error		Flatness Relative to 50 MHz	
		dc	ac	dc	ac	dc	ac	dc	ac
0.1									
0.5									
1									
5									
10[a]									
10[b]									
20									
50								0 dB (ref)	0 dB (ref)
75									
175									
275									
375									
475									

ManualsPlus.com

Table 2-45 Frequency Response Worksheet, 100 kHz to 3.0 GHz

Freq. (MHz)	Splitter Tracking Error	Current Channel B Reading		Marker (Mkr1) Amptd		Flatness Error		Flatness Relative to 50 MHz	
		dc	ac	dc	ac	dc	ac	dc	ac
575									
675									
775									
825									
875									
925									
975									
1025									
1075									
1175									
1275									
1375									
1500									
1525									
1625									
1675									
1725									
1775									
1825									
1875									
1925									
1975									
2025									
2125									
2325									
2525									
2725									

ManualsPlus.com

Table 2-45 Frequency Response Worksheet, 100 kHz to 3.0 GHz

Freq. (MHz)	Splitter Tracking Error	Current Channel B Reading		Marker (Mkr1) Amptd		Flatness Error		Flatness Relative to 50 MHz	
		dc	ac	dc	ac	dc	ac	dc	ac
2925									
2999									

a. This entry is for data taken with the function generator as source.
b. This entry is for data taken with the synthesized sweeper as source.

ManualsPlus.com

Measuring Frequency Response Less Than or Equal to 100 kHz

1. Connect the equipment as shown in Figure 2-31.

Figure 2-31 Frequency Response Test Setup, ≤100 kHz

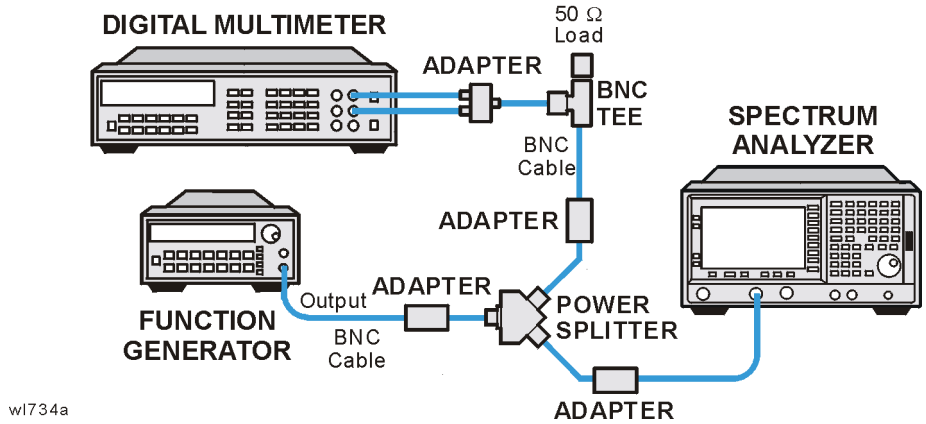

2. Set the function generator controls as follows:

   FREQUENCY, **100 kHz**
   AMPLITUDE, **–4 dBm**
   Amptd Increment, **0.05 dB**

3. Set the DVM as follows:

Function	Synchronous AC Volts
Math	dBm
RES Register	50 Ω
Front/Rear Terminals	Front
Range	Auto

4. On the analyzer, press **FREQUENCY**, **100 kHz**.
5. If the analyzer has Option UKB, press **Input/Output (or Input)**, **Coupling** (DC). Then press **SPAN, 100 Hz, BW/Avg, Res BW, 10 Hz, Video BW, 10 Hz**.
6. Adjust the function generator amplitude until the DVM reading is –10 dBm ±0.1 dB.
7. Record the actual DVM reading in Table 2-46 as the DVM Amplitude reading.
8. On the analyzer, press **Peak Search** (or **Search**), **Marker, Delta**.
9. Set the analyzer center frequency to the next frequency listed in Table 2-46.
10. Set the function generator frequency to the next frequency listed in

ManualsPlus.com

Table 2-46. Frequencies less than 9 kHz only apply to analyzers with Option UKB.

11. On the analyzer, press **Peak Search** (or **Search**).

12. Adjust the function generator amplitude until the marker delta (Δ `Mkr1`) amplitude reads 0 dB ±0.05 dB.

13. Record the DVM reading in Table 2-46 as the DVM Amplitude reading.

14. Repeat step 9 through step 13 for each frequency setting listed in Table 2-46.

15. For each of the frequencies in Table 2-46, subtract the DVM Amplitude from the DVM Amplitude at 100 kHz recorded in step 7. Record the result as the Response Relative to 100 kHz in Table 2-46.

16. From Table 2-45, note the Flatness Relative to 50 MHz for the 100 kHz frequency. Record this below as the 100 kHz Error Relative to 50 MHz:

    100 kHz Error Relative to 50 MHz =_____ dB

17. Add the 100 kHz Error Relative to 50 MHz that was recorded in step 16 above to each of the Response Relative to 100 kHz entries in Table 2-46. Record the results as the Response Relative to 50 MHz in Table 2-46.

Table 2-46 **Frequency Response Worksheet,** ≤100 kHz

Frequency	DVM Amplitude	Response Relative to 100 kHz	Response Relative to 50 MHz
100 kHz		0 dB (Ref)	
75 kHz			
50 kHz			
20 kHz			
9 kHz			
5 kHz[a]			
2 kHz[a]			
1 kHz[a]			
500 Hz[a]			
200 Hz[a]			
100 Hz[a]			

a. These frequencies apply only to analyzers with Option UKB.

ManualsPlus.com

Test Results

Perform the following steps to verify the frequency response of the analyzer.

1. Enter the most positive number from the Flatness Relative to 50 MHz (dc) column of Table 2-45:

   _____ dB

2. Enter the most positive number from the Response Relative to 50 MHz column of Table 2-46:

   _____ dB

3. Record the most positive of numbers from step 1 and step 2 into Table 2-47 as the Maximum Response for Band 0.

4. Enter the most negative number from the Flatness Relative to 50 MHz (dc) column of Table 2-45:

   _____ dB

5. Enter the most negative number from the Response Relative to 50 MHz column of Table 2-46:

   _____ dB

6. Record the most negative of numbers from step 4 and step 5 into Table 2-47 as the Minimum Response for Band 0.

7. For Band 0 in Table 2-47, subtract the Minimum Response value from the Maximum Response value and record the result in the Peak-to-Peak Response column.

8. If the analyzer is an Agilent E4403B or an E4402B with a serial number less than US39441006 then transfer the values in Table 2-47 into the test record in this guide. The frequency response test is complete for those instruments only.

9. If the analyzer has Option UKB then perform step 18 through step 27. Otherwise, perform step 10 through step 16.

10. Note the most positive number from the Flatness Relative to 50 MHz (dc) column of Table 2-45 for frequencies between 800 MHz and 1.0 GHz. Record this number in Table 2-47 as the Maximum Response for Band 0A.

11. Note the most negative number from the Flatness Relative to 50 MHz (dc) column of Table 2-45 for frequencies between 800 MHz and 1.0 GHz. Record this number in Table 2-47 as the Minimum Response for Band 0A.

12. For Band 0A in Table 2-47, subtract the Minimum Response value from the Maximum Response value and record the result in the Peak-to-Peak Response column.

ManualsPlus.com

13. Note the most positive number from the Flatness Relative to 50 MHz (dc) column of Table 2-45 for frequencies between 1.7 GHz and 2.0 GHz. Record this number in Table 2-47 as the Maximum Response for Band 0B.

14. Note the most negative number from the Flatness Relative to 50 MHz (dc) column of Table 2-45 for frequencies between 1.7 GHz and 2.0 GHz. Record this number in Table 2-47 as the Minimum Response for Band 0B.

15. For Band 0B in Table 2-47, subtract the Minimum Response value from the Maximum Response value and record the result in the Peak-to-Peak Response column.

16. Transfer the values entered in Table 2-47 to the test record in this guide.

17. The frequency response test for analyzers without Option UKB is now complete. The following steps apply only to analyzers having Option UKB.

18. Record the most positive number from the Flatness Relative to 50 MHz (ac) column of Table 2-45 as the Maximum Response for Band 0 in Table 2-48.

19. Record the most negative number from the Flatness Relative to 50 MHz (ac) column of Table 2-45 as the Minimum Response for Band 0 in Table 2-48.

20. For Band 0 in Table 2-48, subtract the Minimum Response value from the Maximum Response value and record the result in the Peak-to-Peak Response column.

21. Note the most positive number from the Flatness Relative to 50 MHz (ac) column of Table 2-45 for frequencies between 800 MHz and 1.0 GHz. Record this number in Table 2-48 as the Maximum Response for Band 0A.

22. Note the most negative number from the Flatness Relative to 50 MHz (ac) column of Table 2-45 for frequencies between 800 MHz and 1.0 GHz. Record this number in Table 2-48 as the Minimum Response for Band 0A.

23. For Band 0A in Table 2-48, subtract the Minimum Response value from the Maximum Response value and record the result in the Peak-to-Peak Response column.

24. Note the most positive number from the Flatness Relative to 50 MHz (ac) column of Table 2-45 for frequencies between 1.7 GHz and 2.0 GHz. Record this number in Table 2-48 as the Maximum Response for Band 0B.

25. Note the most negative number from the Flatness Relative to 50 MHz (ac) column of Table 2-45 for frequencies between 1.7 GHz

ManualsPlus.com

and 2.0 GHz. Record this number in Table 2-48 as the Minimum Response for Band 0B.

26. For Band 0B in Table 2-48, subtract the Minimum Response value from the Maximum Response value and record the result in the Peak-to-Peak Response column.

27. Transfer the values entered in Table 2-48 to the test record in this guide.

28. The frequency response test for analyzers with Option UKB is now complete.

Table 2-47 Frequency Response Results, dc Coupled

Band	Maximum Response		Minimum Response		Peak-to-Peak Response	
	dB	Test Record Entry	dB	Test Record Entry	dB	Test Record Entry
0		1)		2)		3)
0A		4)		5)		6)
0B		7)		8)		9)

Table 2-48 Frequency Response Results, ac Coupled

Band	Maximum Response		Minimum Response		Peak-to-Peak Response	
	dB	Test Record Entry	dB	Test Record Entry	dB	Test Record Entry
0		10)		11)		12)
0A		13)		14)		15)
0B		16)		17)		18)

ManualsPlus.com

24. Frequency Response, Agilent E4404B, E4405B, E4407B, and E4408B

This test measures the amplitude error of the analyzer as a function of frequency. To measure frequencies of 100 kHz and greater, the output of a source is fed through a power splitter to a power sensor and the analyzer. A function generator is used as the source from 100 kHz to 10 MHz, and a synthesized sweeper at 10 MHz and greater. To measure frequencies below 100 kHz, a DVM with a 50 Ω load replaces the power sensor.

For improved amplitude accuracy the power splitter is characterized using a “reference” sensor connected to one power splitter output port. The other power splitter output port connects to the “buried” sensor; it is not removed from the power splitter. Once the characterization is done, the reference sensor is removed and replaced by the analyzer. Measurements are made at the same frequencies used in the characterization. The analyzer marker amplitude measurements are corrected using the characterization data to determine the absolute flatness error and the flatness error relative to 50 MHz.

To measure frequencies greater than 3 GHz, the source power level is adjusted at 50 MHz to place the displayed signal at the analyzer center horizontal graticule line. The power meter is then set to measure dB relative to the power at 50 MHz. At each new source frequency and analyzer center frequency, the source power level is adjusted to place the signal at the center horizontal graticule line. The power meter displays the inverse of the frequency response relative to 50 MHz.

This procedure does not test frequency response with the optional preamplifier (Option 1DS) turned on. If the analyzer is equipped with a preamplifier, also perform the “Frequency Response, Preamp On” procedure. Analyzers with Option UKB are tested down to 100 Hz in dc coupled mode. In ac coupled mode, Agilent E4404B and E4405B analyzers are tested down to 100 kHz. Agilent E4407B analyzers with Option UKB are tested down to 10 MHz in ac coupled mode.

The related adjustment for this performance test is “Frequency Response.”

Equipment Required

Synthesized sweeper
Function generator
Power meter
RF Power sensor (*2 required*)
Microwave power sensor
Microwave power splitter
Digital multimeter

ManualsPlus.com

Adapter, APC 3.5 (f) to APC 3.5 (f)
Adapter, Type-N (m) to Type-N (m)
Adapter, Type-N (m) to BNC (f)
Dual banana plug to BNC (f)
BNC Tee (BNC f,m,f)
Cable, BNC, 122-cm (48-in) (*2 required*)
Cable, APC 3.5
Termination, 50 Ω, BNC (m)

Procedure

Source/Splitter Characterization

1. Connect the equipment as shown in Figure 2-32. Use the function generator as the source. Connect one of the Agilent 8482A power sensors to Channel A of the power meter. This will be the “reference” sensor. Connect the other Agilent 8482A power sensor to Channel B of the power meter. This will be the “buried” sensor.

Figure 2-32 Source/Splitter Characterization Setup

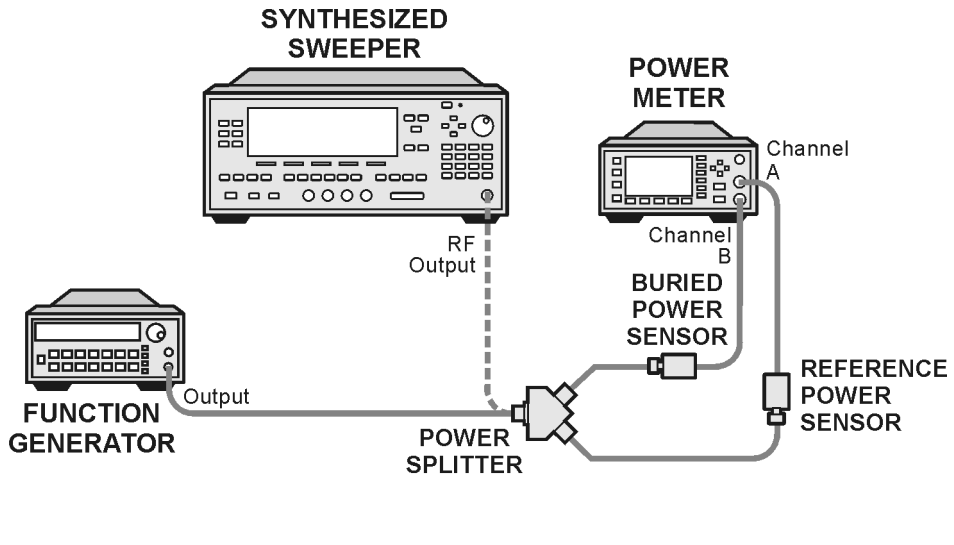

2. Zero and calibrate both power sensors.
3. On the power meter, set the Channel A calibration factor to the calibration factor of the reference sensor for 100 kHz.
4. On the power meter, set the Channel B calibration factor to 100%. Do not change this calibration factor during this test.
5. Set the function generator frequency to 100 kHz and amplitude to –4 dBm.
6. Adjust the function generator amplitude to obtain a Channel A

ManualsPlus.com

power meter reading of –10 dBm ±0.1 dB.

7. Record the function generator amplitude setting, and both the Channel A and Channel B power meter readings in Table 2-49.
8. Tune the source to the next frequency in Table 2-49.
9. On the power meter, set the Channel A calibration factor to the calibration factor of the reference sensor for the current source frequency.
10. Adjust the source amplitude to obtain a Channel A power meter reading of –10 dBm ±0.1 dB.
11. Record the source amplitude setting, and both the Channel A and Channel B power meter readings in Table 2-49.
12. Repeat step 8 through step 11 for frequencies up through 10 MHz.
13. Replace the function generator with the synthesized sweeper.
14. Set the synthesized sweeper CW frequency to 10 MHz and the amplitude to –4 dBm.
15. Adjust the synthesized sweeper power level to obtain a Channel A power meter reading of –10 dBm ±0.1 dB.
16. Record the synthesized sweeper power level and both the Channel A and Channel B power meter readings in Table 2-49.
17. Repeat step 8 through step 11 for each remaining frequency in Table 2-49.
18. For each entry in Table 2-49, calculate the Splitter Tracking Error as follows:

    Splitter Tracking Error = Channel A Power – Channel B Power

    For example, if Channel A Power is –10.05 dBm and Channel B Power is –10.23 dBm, the Splitter Tracking Error is 0.18 dB.

Table 2-49 Source/Splitter Characterization

Frequency	Power Meter Reading		Splitter Tracking Error	Source Power Setting
	Channel A	Channel B		
100 kHz				
500 kHz				
1 MHz				
5 MHz				
10 MHz[a]				
10 MHz[b]				

ManualsPlus.com

Table 2-49 Source/Splitter Characterization

Frequency	Power Meter Reading		Splitter Tracking Error	Source Power Setting
	Channel A	Channel B		
20 MHz				0 dB (Ref)
50 MHz				
75 MHz				
175 MHz				
275 MHz				
375 MHz				
475 MHz				
575 MHz				
675 MHz				
775 MHz				
825 MHz				
875 MHz				
925 MHz				
975 MHz				
1025 MHz				
1075 MHz				
1175 MHz				
1275 MHz				
1375 MHz				
1500 MHz				
1525 MHz				
1625 MHz				
1675 MHz				
1725 MHz				
1775 MHz				
1825 MHz				
1875 MHz				
1925 MHz				

ManualsPlus.com

Table 2-49 Source/Splitter Characterization

Frequency	Power Meter Reading		Splitter Tracking Error	Source Power Setting
	Channel A	Channel B		
1975 MHz				
2025 MHz				
2125 MHz				
2325 MHz				
2525 MHz				
2725 MHz				
2925 MHz				
2999 MHz				

a. This entry is for data taken with the function generator as source.
b. This entry is for data taken with the synthesized sweeper as source.

Measuring Frequency Response, 100 kHz to 3.0 GHz

1. Refer to Figure 2-33. Remove the reference sensor (Channel A sensor) from the power splitter. Connect the power splitter to the 50 Ω Input of the analyzer using an adapter. Do not use a cable.

Figure 2-33 Frequency Response Test Setup, 100 kHz to 3.0 GHz

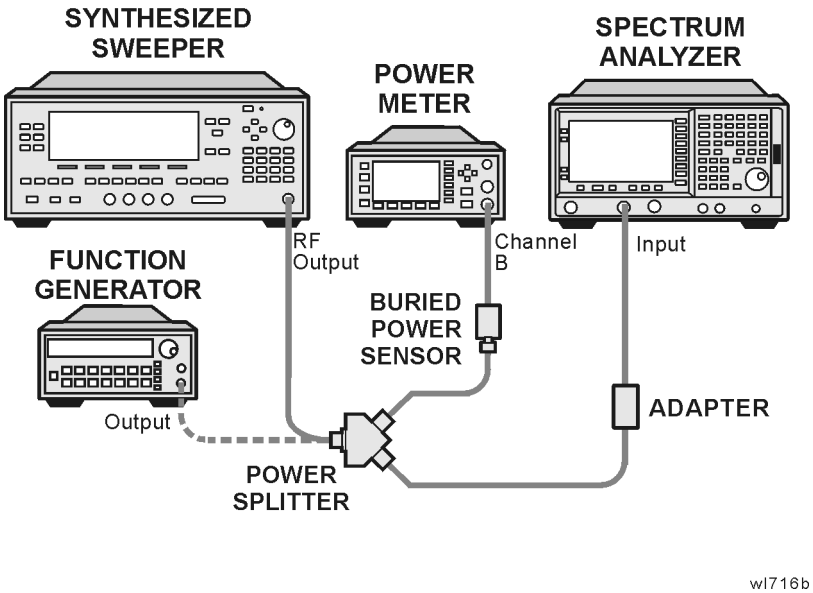

ManualsPlus.com

2. Set the source frequency to 10 MHz.
3. Set the source power level to the value corresponding to the source power setting in Table 2-49 for the current source frequency (10 MHz).
4. Press **Preset** on the analyzer. Press the **Factory Preset** softkey, if it is displayed. Set the controls as follows:

   FREQUENCY, Center Freq, 10 MHz
   CF Step, 100 MHz
   SPAN, 20 kHz
   Input/Output (or Input), Coupling (DC) (*Agilent E4404B, E4405B, or any model with Option UKB*)
   AMPLITUDE, More, Int Preamp, (Off) (*Option 1DS only*)

   AMPLITUDE, Ref Level, –5 dBm
   Attenuation, 10 dB (Man)
   Scale/Div, 1 dB
   BW/Avg, Res BW, 3 kHz (Man)
   Video BW, 3 kHz (Man)

5. Adjust the source power level to obtain the Channel B power meter reading recorded in Table 2-49 ±0.1 dB.
6. Record the current Channel B power reading in Table 2-50 as the Current Channel B Reading for dc (coupling).
7. On the analyzer, press **Single** then **Peak Search** (or **Search**).
8. Record the marker (`Mkr1`) amplitude reading in Table 2-50 for dc (coupling).
9. Set the source to the next frequency listed in Table 2-50.
10. Set the analyzer center frequency to the next frequency listed in Table 2-50.
11. Adjust the source power level to obtain the Channel B power meter reading recorded in Table 2-49 ±0.1 dB for the current frequency.
12. Record the current Channel B power reading in Table 2-50 as the current Channel B reading.
13. On the analyzer, press **Single** then **Peak Search** (or **Search**).
14. Record the marker (`Mkr1`) amplitude reading in Table 2-50.
15. Repeat step 9 through step 14 for each remaining frequency in Table 2-50.
16. If the analyzer under test is an Agilent E4407B with Option UKB and is being tested in ac coupled mode, continue with step 26. These analyzers are specified only down to 10 MHz in ac coupled mode.
17. Replace the synthesized sweeper with the function generator.

ManualsPlus.com

18. Set the function generator amplitude to –4 dBm.
19. Set the function generator frequency to 100 kHz.
20. On the analyzer, press **FREQUENCY**, **Center Freq**, **100 kHz**.
21. Adjust the function generator amplitude to obtain the Channel B power meter reading recorded in Table 2-49 ±0.1 dB for 100 kHz.
22. Record the current Channel B power reading in Table 2-50 as the current Channel B reading.
23. On the analyzer, press **Single** then **Peak Search** (or **Search**).
24. Record the analyzer marker (`Mkr1`) Amplitude Reading in Table 2-50 as marker (`Mkr1`) Amplitude.
25. Repeat step 19 through step 24 for frequencies between 100 kHz and 10 MHz.
26. Copy the Splitter Tracking Errors from Table 2-49 into Table 2-50.
27. Calculate the Flatness Error for each frequency in Table 2-50 as follows:

    $$\text{Flatness Error} = \text{Mkr1 Amptd}_{dBm} - \text{Current Channel B}_{dBm} - \text{Splitter Tracking Error}_{dB}$$

    For example, if marker (`Mkr1`) Amptd is –10.32 dBm, Current Channel B is –10.2 dBm and Splitter Tracking Error is 0.18 dB, Flatness Error would be –0.30 dB.
28. Record the Flatness Error for 50 MHz below as the 50 MHz Ref Amptd:

    50 MHz Ref Amptd: _____
29. Continue with step 31 if the analyzer under test is an Agilent E4407B with Option UKB and is being tested in ac coupled mode. Calculate the setup change error (error due to changing the test setup from using a synthesized sweeper to using a function generator) as follows:

    a. Record the Flatness Error from Table 2-50 at 10 MHz using the function generator as FlatError_{FG}:

       FlatError_{FG}=_____ dB

    b. Record the Flatness Error from Table 2-50 at 10 MHz using the synthesized sweeper as FlatError_{SS}:

       FlatError_{SS}=_____ dB

    c. Subtract FlatError_{SS} from FlatError_{FG} and record the result as the Setup Change Error:

       $$\text{Setup Change Error} = \text{FlatError}_{FG} - \text{FlatError}_{SS}$$

ManualsPlus.com

Setup Change Error =_____ dB

30. For frequencies less than 10 MHz calculate the Flatness Relative to 50 MHz for each frequency in Table 2-50 as follows:

Flatness Relative to 50 MHz = Flatness Error – 50 MHz Ref Amptd – Setup Change Error

For example, if Flatness Error is –0.30 dB, 50 MHz Ref Amptd is 0.15 dB and Setup Change Error is –0.19 dB, Flatness Relative to 50 MHz would be –0.26 dB.

31. For frequencies 10 MHz and greater, calculate the Flatness Relative to 50 MHz for each frequency in Table 2-50 as follows:

Flatness Relative to 50 MHz = Flatness Error – 50 MHz Ref Amptd

For example, if Flatness Error is –0.30 dB and 50 MHz Ref Amptd is 0.15 dB, Flatness Relative to 50 MHz would be –0.45 dB.

32. If the analyzer under test is an Agilent E4407B with Option UKB, E4404B or E4405B, continue with this procedure. Otherwise, perform the procedure in "Measuring Frequency Response Less Than or Equal to 100 kHz."

33. Replace the function generator with the synthesized sweeper.

34. Set the source frequency to 10 MHz and the source power level to the value corresponding to the source power setting in Table 2-49 for the current source frequency (10 MHz).

35. On the analyzer, press **Input/Output (or Input), Coupling (AC)**.

36. Repeat step 5 through step 31 for ac coupling.

37. Perform the procedure in "Measuring Frequency Response Less Than or Equal to 100 kHz."

Table 2-50 Frequency Response Worksheet, 100 kHz to 3.0 GHz

Freq. (MHz)	Splitter Tracking Error	Current Channel B Reading		Marker (Mkr1) Amptd		Flatness Error		Flatness Relative to 50 MHz	
		dc	ac	dc	ac	dc	ac	dc	ac
0.1[a]									
0.5[a]									
1[a]									
5[a]									
10[ab]									

ManualsPlus.com

Table 2-50 Frequency Response Worksheet, 100 kHz to 3.0 GHz

Freq. (MHz)	Splitter Tracking Error	Current Channel B Reading		Marker (Mkr1) Amptd		Flatness Error		Flatness Relative to 50 MHz	
		dc	ac	dc	ac	dc	ac	dc	ac
10[c]									
20									
50								0 dB (ref)	0 dB (ref)
75									
175									
275									
375									
475									
575									
675									
775									
825									
875									
925									
975									
1025									
1075									
1175									
1275									
1375									
1500									
1525									
1625									
1675									
1725									
1775									

ManualsPlus.com

Table 2-50 Frequency Response Worksheet, 100 kHz to 3.0 GHz

Freq. (MHz)	Splitter Tracking Error	Current Channel B Reading		Marker (Mkr1) Amptd		Flatness Error		Flatness Relative to 50 MHz	
		dc	ac	dc	ac	dc	ac	dc	ac
1825									
1875									
1925									
1975									
2025									
2125									
2325									
2525									
2725									
2925									
2999									

a. This frequency is not tested on Agilent E4407B analyzers with Option UKB when in ac coupled mode.
b. This entry is for data taken with the function generator as source.
c. This entry is for data taken with the synthesized sweeper as source.

ManualsPlus.com

Measuring Frequency Response Less Than or Equal to 100 kHz

NOTE Do not perform this procedure for Agilent E4407B analyzers having Option UKB in ac coupled mode.

1. Connect the equipment as shown in Figure 2-34.

Figure 2-34 Frequency Response Test Setup, ≤100 kHz

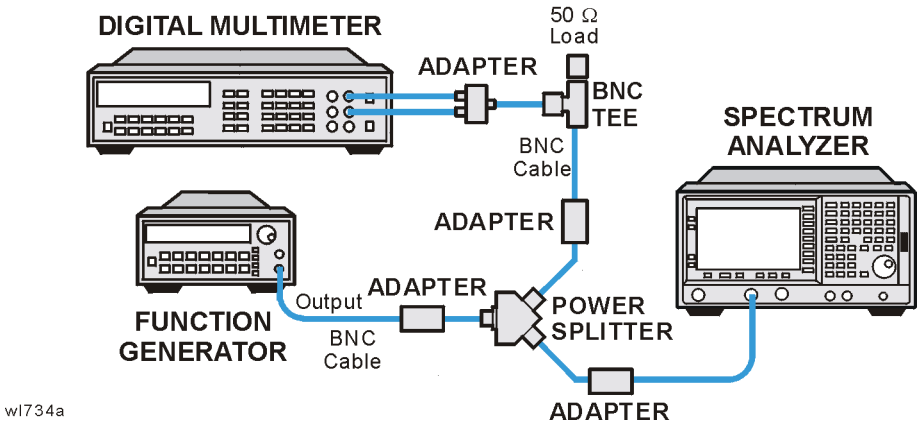

2. Set the function generator controls as follows:

   FREQUENCY, **100 kHz**
   AMPLITUDE, **–4 dBm**
   Amptd Increment, **0.05 dB**

3. Set the DVM as follows:

Function	Synchronous AC Volts
Math	dBm
RES Register	50 Ω
Front/Rear Terminals	Front
Range	Auto

4. On the analyzer, press **FREQUENCY**, **100 kHz**.
5. If the analyzer under test is an Agilent E4407B with Option UKB, E4404B or E4405B, press **Input/Output (or Input), Coupling** (DC).
6. If the analyzer under test has Option UKB then press **SPAN, 100 Hz, BW/Avg, Res BW, 10 Hz, Video BW, 10 Hz**.
7. Adjust the function generator amplitude until the DVM reading is –10 dBm ±0.1 dB.
8. Record the actual DVM reading in Table 2-51 as the DVM Amplitude reading.

ManualsPlus.com

9. On the analyzer, press **Peak Search** (or **Search**), **Marker, Delta**.
10. Set the analyzer center frequency to the next frequency listed in Table 2-51.
11. Set the function generator frequency to the next frequency listed in Table 2-51. Frequencies less than 9 kHz only apply to analyzers with Option UKB.
12. On the analyzer, press **Peak Search** (or **Search**).
13. Adjust the function generator amplitude until the marker delta (Δ `Mkr1`) amplitude reads 0 dB ±0.05 dB.
14. Record the DVM reading in Table 2-51 as the DVM Amplitude reading.
15. Repeat step 10 through step 14 for each frequency setting listed in Table 2-51.
16. For each of the frequencies in Table 2-51, subtract the DVM Amplitude from the DVM Amplitude at 100 kHz recorded in step 8. Record the result as the Response Relative to 100 kHz in Table 2-51.
17. From Table 2-50, note the Flatness Relative to 50 MHz for the 100 kHz frequency. Record this below as the 100 kHz Error Relative to 50 MHz:

    100 kHz Error Relative to 50 MHz =_____ dB
18. Add the 100 kHz Error Relative to 50 MHz that was recorded in step 17 above to each of the Response Relative to 100 kHz entries in Table 2-51. Record the results as the Response Relative to 50 MHz in Table 2-51.

Table 2-51 **Frequency Response Worksheet,** ≤100 kHz

Frequency	DVM Amplitude	Response Relative to 100 kHz	Response Relative to 50 MHz
100 kHz		0 dB (Ref)	
75 kHz			
50 kHz			
20 kHz			
9 kHz			
5 kHz[a]			
2 kHz[a]			
1 kHz[a]			

ManualsPlus.com

Table 2-51 **Frequency Response Worksheet,** ≤100 kHz

Frequency	DVM Amplitude	Response Relative to 100 kHz	Response Relative to 50 MHz
500 Hz[a]			
200 Hz[a]			
100 Hz[a]			

a. These frequencies apply only to analyzers with Option UKB.

ManualsPlus.com

Measuring Frequency Response, >3 GHz

1. Replace the Channel B power sensor with the microwave power sensor. Zero and calibrate the power sensor and power meter in log mode. Enter the 50 MHz calibration factor of the power sensor into the power meter.
2. Connect the equipment as shown in Figure 2-35.

Figure 2-35 Frequency Response Test Setup, >3 GHz

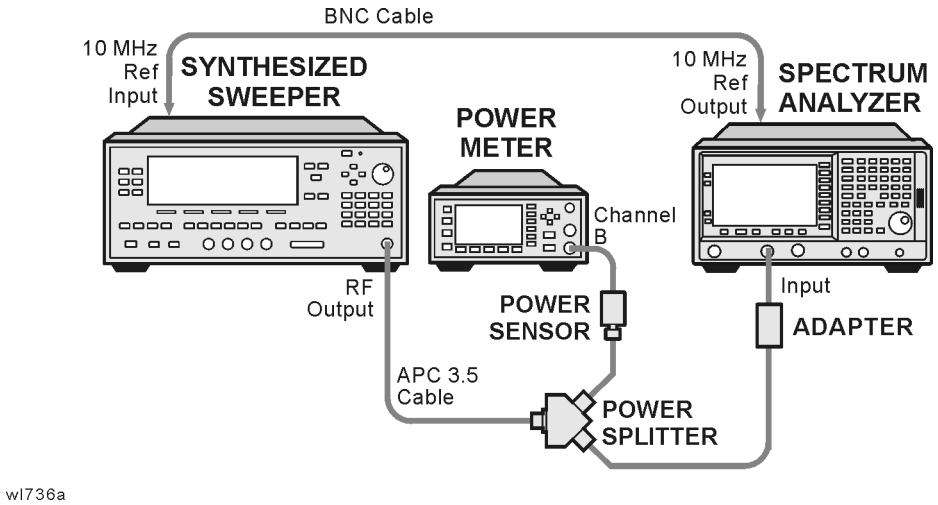

3. If the analyzer is an Agilent E4407B with Option UKB, E4404B or E4405B, then press **Input/Output (or Input), Coupling** (DC). This sets the analyzer to dc coupled mode.
4. On the analyzer, press **FREQUENCY, 50 MHz, CF Step 250 MHz**.
5. Set the synthesized sweeper CW frequency to 50 MHz and FREQ STEP to 250 MHz.
6. Adjust the synthesized sweeper power level for a power meter reading of –10 dBm ±0.05 dB.
7. On the analyzer, press **Peak Search** (or **Search**).
8. On the analyzer, press **Marker, Delta**.
9. Activate the dB relative mode on the power meter. Power meter readings will now be displayed relative to the power meter reading at 50 MHz.
10. Set the synthesized sweeper CW frequency to the next frequency listed in Table 2-52.
11. Enter the appropriate power sensor calibration factor into the power meter.
12. On the analyzer, press **Peak Search** (or **Search**), **Amplitude**,

ManualsPlus.com

Presel Center.

13. Adjust the synthesized sweeper power level until the analyzer marker delta (Δ `Mkr1`) amplitude reading is 0 dB ±0.05 dB.

14. Record the *negative of the* power meter reading in Table 2-52 as the Flatness Relative to 50 MHz for dc coupled mode.

NOTE Record this power meter reading as the negative, or opposite polarity from the measured value. For example, a measured value of –0.75 dB is recorded as +0.75 dB; a measured value of +0.25 dB is recorded as –0.25 dB.

If the analyzer is an Agilent E4407B without Option UKB, make all entries in the dc coupled column.

15. Repeat step 10 through step 14 for frequencies up through 6.699 GHz in Table 2-52. On the analyzer, pressing **FREQUENCY,** ↑ will allow you to step through most of the frequencies. Similarly, on the synthesized sweeper, pressing **CW,** ↑ will allow you to step through most of the frequencies.

16. If the analyzer is an Agilent E4404B, continue with the next step. Otherwise, continue with step 20.

17. On the analyzer, press **Input/Output (or Input), Coupling** (AC). This sets the analyzer to ac coupled mode.

18. Repeat step 4 through step 15, making entries in the ac Coupled column of Table 2-52.

19. Continue with "Agilent E4404B/E4405B Test Results" (for an Agilent E4404B only). The following steps apply to the Agilent E4405B, E4407B, and E4408B only.

20. Set the synthesized sweeper FREQ STEP to 400 MHz.

Set the analyzer center frequency step size to 400 MHz by manually pressing **FREQUENCY, CF Step, 400 MHz**.

21. Repeat step 10 through step 14 for frequencies up through 13.199 GHz in Table 2-52.

22. If the analyzer is an Agilent E4405B, continue with the next step. If the analyzer is an Agilent E4407B or E4408B, continue with step 27.

23. On the analyzer, press **Input/Output (or Input), Coupling** (AC). This sets the analyzer to ac coupled mode.

24. Repeat step 4 through step 15, making entries in the ac Coupled column of Table 2-52.

25. Set the synthesized sweeper FREQ STEP to 400 MHz.

Set the analyzer center frequency step size to 400 MHz by pressing **FREQUENCY, CF Step, 400 MHz**.

ManualsPlus.com

26. Repeat step 10 through step 14 for frequencies up through 13.199 GHz making entries in the ac Coupled column of Table 2-52.

27. Continue with "Agilent E4404B/E4405B Test Results" (for an Agilent E4405B only). The following steps apply to the Agilent E4407B and E4408B only.

28. Set the synthesized sweeper FREQ STEP to 500 MHz.

    Set the analyzer center frequency step size to 500 MHz by pressing **FREQUENCY, CF Step, 500 MHz**.

29. Repeat step 10 through step 14 for the remaining frequencies in Table 2-52. If the analyzer under test is an Agilent E4407B with Option UKB then continue with the next step. Otherwise, continue with "Agilent E4407B/E4408B Test Results" (for an Agilent E4407B or E4408B only).

30. On the analyzer, press **Input/Output (or Input), Coupling** (AC). This sets the analyzer to ac coupled mode.

31. Repeat step 4 through step 15, making entries in the ac Coupled column of Table 2-52.

32. Set the synthesized sweeper FREQ STEP to 400 MHz.

    Set the analyzer center frequency step size by pressing **FREQUENCY, CF Step, 400 MHz**.

33. Repeat step 10 through step 14 for the remaining frequencies in Table 2-52, making entries in the ac Coupled column.

34. Continue with "Agilent E4407B/E4408B Test Results."

Table 2-52 Frequency Response Worksheet, >3 GHz

Frequency	Flatness Relative to 50 MHz, dB	
	dc Coupled	ac Coupled
3.05 GHz		
3.25 GHz		
3.5 GHz		
3.75 GHz		
4.0 GHz		
4.25 GHz		
4.5 GHz		
4.75 GHz		
5.0 GHz		

ManualsPlus.com

Table 2-52 Frequency Response Worksheet, >3 GHz

Frequency	Flatness Relative to 50 MHz, dB	
	dc Coupled	ac Coupled
5.25 GHz		
5.5 GHz		
5.75 GHz		
6.0 GHz		
6.25 GHz		
6.5 GHz		
6.699 GHz		
End of worksheet recording for Agilent E4404B		
6.8 GHz		
7.0 GHz		
7.4 GHz		
7.8 GHz		
8.2 GHz		
8.6 GHz		
9.0 GHz		
9.4 GHz		
9.8 GHz		
10.2 GHz		
10.6 GHz		
11.0 GHz		
11.4 GHz		
11.8 GHz		
12.2 GHz		
12.6 GHz		
12.8 GHz		
13.199 GHz		
End of worksheet recording for Agilent E4405B		
13.3 GHz		

ManualsPlus.com

Table 2-52 Frequency Response Worksheet, >3 GHz

Frequency	Flatness Relative to 50 MHz, dB	
	dc Coupled	ac Coupled
13.5 GHz		
14.0 GHz		
14.5 GHz		
15.0 GHz		
15.5 GHz		
16.0 GHz		
16.5 GHz		
17.0 GHz		
17.5 GHz		
18.0 GHz		
18.5 GHz		
19.0 GHz		
19.5 GHz		
20.0 GHz		
20.5 GHz		
21.0 GHz		
21.5 GHz		
22.0 GHz		
22.5 GHz		
23.0 GHz		
23.5 GHz		
24.0 GHz		
24.5 GHz		
25.0 GHz		
25.5 GHz		
26.0 GHz		
26.5 GHz		

ManualsPlus.com

Agilent E4404B/E4405B Test Results

Perform the following steps to verify the frequency response of the analyzer.

1. Enter the most positive number from the Flatness Relative to 50 MHz (dc) column of Table 2-50:

   _____ dB

2. Enter the most positive number from the Response Relative to 50 MHz column of Table 2-51:

   _____ dB

3. Record the most positive of numbers from step 1 and step 2 in Table 2-53 as the Maximum Response for Band 0.

4. Enter the most negative number from the Flatness Relative to 50 MHz (dc) column of Table 2-50:

   _____ dB

5. Enter the most negative number from the Response Relative to 50 MHz column of Table 2-51:

   _____ dB

6. Record the most negative of numbers from step 4 and step 5 in Table 2-53 as the Minimum Response for Band 0.

7. For Band 0 in Table 2-53, subtract the Minimum Response value from the Maximum Response value and record the result in the Peak-to-Peak Response column.

8. Note the most positive number from the Flatness Relative to 50 MHz (dc) column of Table 2-52 for frequencies between 3.0 GHz and 6.7 GHz. Record this number in Table 2-53 as the Maximum Response for Band 1.

9. Note the most negative number from the Flatness Relative to 50 MHz (dc) column of Table 2-52 for frequencies between 3.0 GHz and 6.7 GHz. Record this number in Table 2-53 as the Minimum Response for Band 1.

10. For Band 1 in Table 2-53, subtract the Minimum Response value from the Maximum Response value and record the result in the Peak-to-Peak Response column.

11. If the analyzer is an Agilent E4404B, then continue with step 15.

12. Note the most positive number from the Flatness Relative to 50 MHz (dc) column of Table 2-52 for frequencies between 6.7 GHz and 13.2 GHz. Record this number in Table 2-53 as the Maximum Response for Band 2.

13. Note the most negative number from the Flatness Relative to

ManualsPlus.com

50 MHz (dc) column of Table 2-52 for frequencies between 6.7 GHz and 13.2 GHz. Record this number in Table 2-53 as the Minimum Response for Band 2.

14. For Band 2 in Table 2-53, subtract the Minimum Response value from the Maximum Response value and record the result in the Peak-to-Peak Response column.

15. Record the most positive number from the Flatness Relative to 50 MHz (ac) column of Table 2-50 as the Maximum Response for Band 0 in Table 2-54.

16. Record the most negative number from the Flatness Relative to 50 MHz (ac) column of Table 2-50 as the Minimum Response for Band 0 in Table 2-54.

17. For Band 0 in Table 2-54, subtract the Minimum Response value from the Maximum Response value and record the result in the Peak-to-Peak Response column.

18. If the analyzer is an Agilent E4404B with a serial number less than US39440498 or an E4405B with a serial number less than US39440327, then continue with step 25.

19. Note the most positive number from the Flatness Relative to 50 MHz (ac) column of Table 2-50 for frequencies between 800 MHz and 1.0 GHz. Record this number in Table 2-54 as the Maximum Response for Band 0A.

20. Note the most negative number from the Flatness Relative to 50 MHz (ac) column of Table 2-50 for frequencies between 800 MHz and 1.0 GHz. Record this number in Table 2-54 as the Minimum Response for Band 0A.

21. For Band 0A in Table 2-54, subtract the Minimum Response value from the Maximum Response value and record the result in the Peak-to-Peak Response column.

22. Note the most positive number from the Flatness Relative to 50 MHz (ac) column of Table 2-50 for frequencies between 1.7 GHz and 2.0 GHz. Record this number in Table 2-54 as the Maximum Response for Band 0B.

23. Note the most negative number from the Flatness Relative to 50 MHz (ac) column of Table 2-50 for frequencies between 1.7 GHz and 2.0 GHz. Record this number in Table 2-54 as the Minimum Response for Band 0B.

24. For Band 0B in Table 2-54, subtract the Minimum Response value from the Maximum Response value and record the result in the Peak-to-Peak Response column.

25. Note the most positive number from the Flatness Relative to 50 MHz (ac) column of Table 2-52 for frequencies between 3.0 GHz and

ManualsPlus.com

6.7 GHz. Record this number in Table 2-54 as the Maximum Response for Band 1.

26. Note the most negative number from the Flatness Relative to 50 MHz (ac) column of Table 2-52 for frequencies between 3.0 GHz and 6.7 GHz. Record this number in Table 2-54 as the Minimum Response for Band 1.

27. For Band 1 in Table 2-54, subtract the Minimum Response value from the Maximum Response value and record the result in the Peak-to-Peak Response column.

28. If the analyzer is an Agilent E4404B then the frequency response test is complete; transfer the values entered in Table 2-54 to the test record in this guide. If the analyzer is an Agilent E4405B, continue this procedure.

29. Note the most positive number from the Flatness Relative to 50 MHz (ac) column of Table 2-52 for frequencies between 6.7 GHz and 13.2 GHz. Record this number in Table 2-54 as the Maximum Response for Band 2.

30. Note the most negative number from the Flatness Relative to 50 MHz (ac) column of Table 2-52 for frequencies between 6.7 GHz and 13.2 GHz. Record this number in Table 2-54 as the Minimum Response for Band 2.

31. For Band 2 in Table 2-54, subtract the Minimum Response value from the Maximum Response value and record the result in the Peak-to-Peak Response column.

32. Transfer the values entered in Table 2-54 to the test record in this guide.

33. The frequency response test for Agilent E4405B analyzers is now complete.

Table 2-53 Frequency Response Results, Agilent E4404B/E4405B, dc Coupled

Band	Maximum Response		Minimum Response		Peak-to-Peak Response	
	dB	Test Record Entry	dB	Test Record Entry	dB	Test Record Entry
0		1)		2)		3)
1		4)		5)		6)
2		7)		8)		9)

ManualsPlus.com

Table 2-54 Frequency Response Results, Agilent E4404B/E4405B, ac Coupled

Band	Maximum Response		Minimum Response		Peak-to-Peak Response	
	dB	Test Record Entry	dB	Test Record Entry	dB	Test Record Entry
0		10)		11)		12)
0A		13)		14)		15)
0B		16)		17)		18)
1		19)		20)		21)
2		22)		23)		24)

Agilent E4407B/E4408B Test Results

Perform the following steps to verify the frequency response of the analyzer.

1. Enter the most positive number from the Flatness Relative to 50 MHz (dc) column of Table 2-50:

   _____ dB

2. Enter the most positive number from the Response Relative to 50 MHz column of Table 2-51:

   _____ dB

3. Record the most positive of numbers from step 1 and step 2 in Table 2-55 as the Maximum Response for Band 0.

4. Enter the most negative number from the Flatness Relative to 50 MHz (dc) column of Table 2-50:

   _____ dB

5. Enter the most negative number from the Response Relative to 50 MHz column of Table 2-51:

   _____ dB

6. Record the most negative of numbers from step 4 and step 5 in Table 2-55 as the Minimum Response for Band 0.

7. For Band 0 in Table 2-55, subtract the Minimum Response value from the Maximum Response value and record the result in the Peak-to-Peak Response column.

8. If the analyzer is an Agilent E4408B, an E4407B with Option UKB, or is an E4407B with a serial number less than US39440871, then

ManualsPlus.com

continue with step 15.

9. Note the most positive number from the Flatness Relative to 50 MHz (dc) column of Table 2-50 for frequencies between 800 MHz and 1.0 GHz. Record this number in Table 2-55 as the Maximum Response for Band 0A.

10. Note the most negative number from the Flatness Relative to 50 MHz (dc) column of Table 2-50 for frequencies between 800 MHz and 1.0 GHz. Record this number in Table 2-55 as the Minimum Response for Band 0A.

11. For Band 0A in Table 2-55, subtract the Minimum Response value from the Maximum Response value and record the result in the Peak-to-Peak Response column.

12. Note the most positive number from the Flatness Relative to 50 MHz (dc) column of Table 2-50 for frequencies between 1.7 GHz and 2.0 GHz. Record this number in Table 2-55 as the Maximum Response for Band 0B.

13. Note the most negative number from the Flatness Relative to 50 MHz (dc) column of Table 2-50 for frequencies between 1.7 GHz and 2.0 GHz. Record this number in Table 2-55 as the Minimum Response for Band 0B.

14. For Band 0B in Table 2-55, subtract the Minimum Response value from the Maximum Response value and record the result in the Peak-to-Peak Response column.

15. Note the most positive number from the Flatness Relative to 50 MHz (dc) column of Table 2-52 for frequencies between 3.0 GHz and 6.7 GHz. Record this number in Table 2-55 as the Maximum Response for Band 1.

16. Note the most negative number from the Flatness Relative to 50 MHz (dc) column of Table 2-52 for frequencies between 3.0 GHz and 6.7 GHz. Record this number in Table 2-55 as the Minimum Response for Band 1.

17. For Band 1 in Table 2-55, subtract the Minimum Response value from the Maximum Response value and record the result in the Peak-to-Peak Response column.

18. Note the most positive number from the Flatness Relative to 50 MHz (dc) column of Table 2-52 for frequencies between 6.7 GHz and 13.2 GHz. Record this number in Table 2-55 as the Maximum Response for Band 2.

19. Note the most negative number from the Flatness Relative to 50 MHz (dc) column of Table 2-52 for frequencies between 6.7 GHz and 13.2 GHz. Record this number in Table 2-55 as the Minimum Response for Band 2.

ManualsPlus.com

20. For Band 2 in Table 2-55, subtract the Minimum Response value from the Maximum Response value and record the result in the Peak-to-Peak Response column.

21. Note the most positive number from the Flatness Relative to 50 MHz (dc) column of Table 2-52 for frequencies between 13.2 GHz and 26.5 GHz. Record this number in Table 2-55 as the Maximum Response for Band 3.

22. Note the most negative number from the Flatness Relative to 50 MHz (dc) column of Table 2-52 for frequencies between 13.2 GHz and 26.5 GHz. Record this number in Table 2-55 as the Minimum Response for Band 3.

23. For Band 3 in Table 2-55, subtract the Minimum Response value from the Maximum Response value and record the result in the Peak-to-Peak Response column.

24. Transfer the values entered in Table 2-55 to the test record in this guide.

25. If the analyzer is an Agilent E4407B with Option UKB, continue with this procedure. Otherwise, the frequency response test for Agilent E4407B or E4408B analyzers is now complete.

Table 2-55 Frequency Response Results, Agilent E4407B/E4408B, dc Coupled

Band	Maximum Response		Minimum Response		Peak-to-Peak Response	
	dB	Test Record Entry	dB	Test Record Entry	dB	Test Record Entry
0		1)		2)		3)
0A		4)		5)		6)
0B		7)		8)		9)
1		10)		11)		12)
2		13)		14)		15)
3		16)		17)		18)

Agilent E4407B, Option UKB Test Results

Perform the following steps to verify the frequency response of the analyzer.

1. Note the most positive of numbers from the Flatness Relative to 50 MHz (ac) column of Table 2-50. Record this number in Table 2-56 as the Maximum Response for Band 0.

2. Note the most negative of numbers from the Flatness Relative to 50

ManualsPlus.com

MHz (ac) column of Table 2-50. Record this number in Table 2-56 as the Minimum Response for Band 0.

3. For Band 0 in Table 2-56, subtract the Minimum Response value from the Maximum Response value and record the result in the Peak-to-Peak Response column.
4. Note the most positive number from the Flatness Relative to 50 MHz (ac) column of Table 2-50 for frequencies between 800 MHz and 1.0 GHz. Record this number in Table 2-56 as the Maximum Response for Band 0A.
5. Note the most negative number from the Flatness Relative to 50 MHz (ac) column of Table 2-50 for frequencies between 800 MHz and 1.0 GHz. Record this number in Table 2-56 as the Minimum Response for Band 0A.
6. For Band 0A in Table 2-56, subtract the Minimum Response value from the Maximum Response value and record the result in the Peak-to-Peak Response column.
7. Note the most positive number from the Flatness Relative to 50 MHz (ac) column of Table 2-50 for frequencies between 1.7 GHz and 2.0 GHz. Record this number in Table 2-56 as the Maximum Response for Band 0B.
8. Note the most negative number from the Flatness Relative to 50 MHz (ac) column of Table 2-50 for frequencies between 1.7 GHz and 2.0 GHz. Record this number in Table 2-56 as the Minimum Response for Band 0B.
9. For Band 0B in Table 2-56, subtract the Minimum Response value from the Maximum Response value and record the result in the Peak-to-Peak Response column.
10. Note the most positive number from the Flatness Relative to 50 MHz (ac) column of Table 2-52 for frequencies between 3.0 GHz and 6.7 GHz. Record this number in Table 2-56 as the Maximum Response for Band 1.
11. Note the most negative number from the Flatness Relative to 50 MHz (ac) column of Table 2-52 for frequencies between 3.0 GHz and 6.7 GHz. Record this number in Table 2-56 as the Minimum Response for Band 1.
12. For Band 1 in Table 2-56, subtract the Minimum Response value from the Maximum Response value and record the result in the Peak-to-Peak Response column.
13. Note the most positive number from the Flatness Relative to 50 MHz (ac) column of Table 2-52 for frequencies between 6.7 GHz and 13.2 GHz. Record this number in Table 2-56 as the Maximum Response for Band 2.

ManualsPlus.com

14. Note the most negative number from the Flatness Relative to 50 MHz (ac) column of Table 2-52 for frequencies between 6.7 GHz and 13.2 GHz. Record this number in Table 2-56 as the Minimum Response for Band 2.
15. For Band 2 in Table 2-56, subtract the Minimum Response value from the Maximum Response value and record the result in the Peak-to-Peak Response column.
16. Note the most positive number from the Flatness Relative to 50 MHz (ac) column of Table 2-52 for frequencies between 13.2 GHz and 26.5 GHz. Record this number in Table 2-56 as the Maximum Response for Band 3.
17. Note the most negative number from the Flatness Relative to 50 MHz (ac) column of Table 2-52 for frequencies between 13.2 GHz and 26.5 GHz. Record this number in Table 2-56 as the Minimum Response for Band 3.
18. For Band 3 in Table 2-56, subtract the Minimum Response value from the Maximum Response value and record the result in the Peak-to-Peak Response column.
19. Transfer the values entered in Table 2-56 to the test record in this guide.
20. The frequency response test for Agilent E4407B analyzers with Option UKB is now complete.

Table 2-56 Frequency Response Results, Agilent E4407B Option UKB, ac Coupled

Band	Maximum Response		Minimum Response		Peak-to-Peak Response	
	dB	Test Record Entry	dB	Test Record Entry	dB	Test Record Entry
0		19)		20)		21)
0A		22)		23)		24)
0B		25)		26)		27)
1		28)		29)		30)
2		31)		32)		33)
3		34)		35)		36)

ManualsPlus.com

25. Frequency Response (Preamp On): Agilent E4401B

This test measures the amplitude error of the analyzer as a function of frequency. The output of a source is fed through a power splitter to a power sensor and the analyzer. The power level of the source is adjusted at 50 MHz to place the displayed signal at approximately –32 dBm. At each new source frequency and analyzer center frequency, the power level of the source is adjusted to place the signal at approximately –32 dBm.

For improved amplitude accuracy the power splitter is characterized using a power sensor (the “reference” sensor) connected to one power splitter output port. The other power splitter output port connects to the “buried” sensor; it is not removed from the power splitter. Once the characterization is done, the reference sensor is removed and replaced by the analyzer.

Analyzers with 75 Ω inputs are tested down to 1 MHz only.

This procedure only tests frequency response with the optional preamplifier (Option 1DS) turned on. Perform the “Frequency Response” procedure to test all other frequency response specifications.

The related adjustment for this performance test is “Frequency Response.”

Equipment Required

Synthesized signal generator
Power meter
RF power sensor (*2 required for 50 Ω inputs*)
20 dB fixed attenuator
Power splitter
Cable, Type-N (m), 183 cm
Cable, BNC, 120 cm
Adapter, Type-N (m) to Type-N (m)
Adapter, Type-N (m) to BNC (f)

Additional Equipment for 75 Ω Input

Power sensor, 75 Ω
Minimum Loss Pad, Type-N (m) 50 Ω to Type-N (f) 75 Ω
Adapter, Type-N (m) to BNC (m), 75 Ω

ManualsPlus.com

Procedure

Source/Splitter Characterization

1. Refer to Figure 2-36. Connect one RF power sensor to Channel A of the power meter. This will be the “reference” sensor. Connect the other RF power sensor to Channel B of the power meter. This will be the “buried” sensor.

   75 Ω inputs: Connect the 75 Ω power sensor to Channel A of the power meter. This will be the “reference” sensor.

Figure 2-36 Source/Splitter Characterization Setup

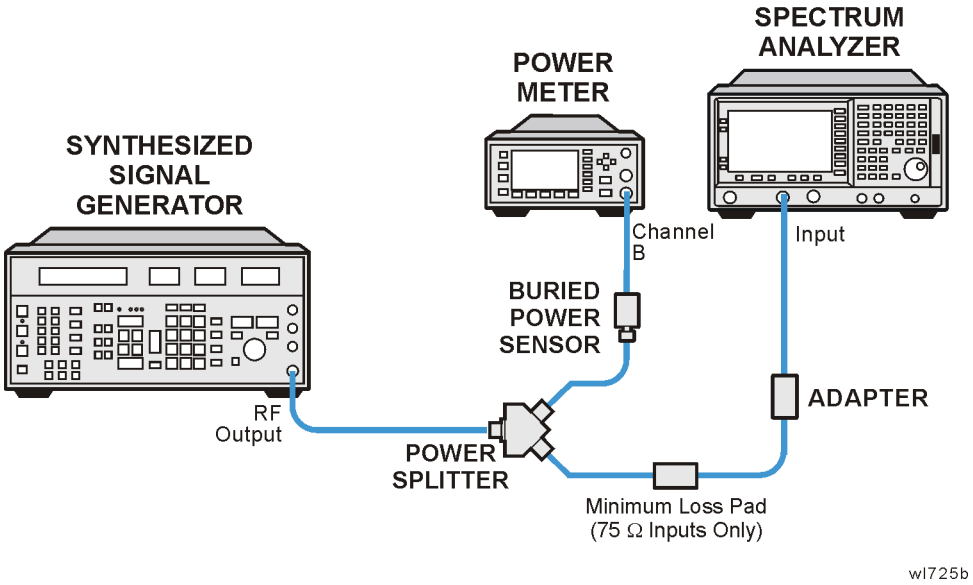

CAUTION Use only 75 Ω cables, connectors, or adapters on instruments with 75 Ω connectors, or damage to the connectors will occur.

2. Zero and calibrate both power sensors.
3. On the power meter, set the Channel A calibration factor to the calibration factor of the reference sensor at 100 kHz.

   75 Ω inputs: Set the Channel A calibration factor to the calibration factor of the reference sensor at 1 MHz.

4. On the power meter, set the Channel B calibration factor to 100%. Do not change this calibration factor during this test.
5. Connect the equipment as shown in Figure 2-36. Note that the reference sensor connects to the 20 dB fixed attenuator.

ManualsPlus.com

75 Ω inputs: Connect the reference sensor to the power splitter and attenuator using the minimum loss pad.

6. Set the source frequency to 100 kHz and amplitude to 6 dBm.

   75 Ω inputs: Set the source frequency to 1 MHz and amplitude to 12 dBm.

7. Adjust the source amplitude to obtain a Channel A power meter reading of –20 dBm ±0.1 dB.
8. Record the Channel A and Channel B power meter readings in Table 2-57.
9. Tune the source to the next frequency in Table 2-57.
10. On the power meter, set the Channel A calibration factor to the calibration factor of the reference sensor for the current source frequency.
11. Adjust the source amplitude to obtain a Channel A power meter reading of –20 dBm ±0.1 dB.
12. Record the Channel A and Channel B power meter readings in Table 2-57.
13. Repeat step 9 through step 12 for each frequency in Table 2-57.
14. For each entry in Table 2-57, calculate the Splitter Tracking Error as follows:

    Splitter Tracking Error = Channel A Power – Channel B Power

    For example, if Channel A Power is –20.3 dBm and Channel B power is –0.23 dBm, the splitter tracking error is –20.07 dB.

NOTE Tracking errors are nominally –25.7 dB when using the minimum loss pad.

Table 2-57 Source/Splitter Characterization

Frequency	Power Meter Reading		Splitter Tracking Error
	Channel A	Channel B	
100 kHz[a]			
500 kHz[a]			
1 MHz			
5 MHz			
10 MHz			

ManualsPlus.com

Table 2-57 Source/Splitter Characterization

Frequency	Power Meter Reading		Splitter Tracking Error
	Channel A	Channel B	
20 MHz			
50 MHz			
75 MHz			
175 MHz			
275 MHz			
375 MHz			
475 MHz			
575 MHz			
675 MHz			
775 MHz			
825 MHz			
875 MHz			
925 MHz			
975 MHz			
1025 MHz			
1075 MHz			
1175 MHz			
1275 MHz			
1375 MHz			
1500 MHz			

a. These values do not apply to analyzers with 75 Ω inputs (Option 1DP).

Measuring Frequency Response, Preamp On

1. Refer to Figure 2-37. Remove the reference sensor (Channel A sensor) from the 20 dB fixed attenuator. Connect the 20 dB fixed attenuator to the analyzer 50 Ω Input using an adapter. Do not use a cable.

ManualsPlus.com

Figure 2-37 Frequency Response Test Setup, Preamp On

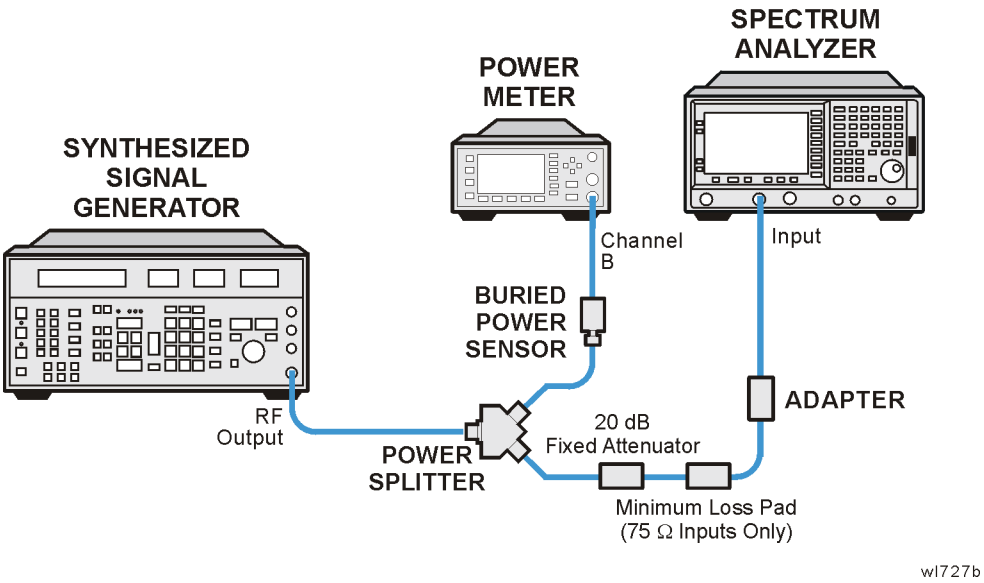

75 Ω inputs: Connect the 20 dB fixed attenuator to the analyzer 75 Ω Input using a mechanical adapter and a 75 Ω, Type-N(m) to BNC(m) adapter.

2. Set the source frequency to 100 kHz:

   75 Ω inputs: Set the source frequency to 1 MHz.

3. Set the source amplitude to –6 dBm.

4. Press **Preset** on the analyzer. Press the **Factory Preset** softkey, if it is displayed. Set the controls as follows:

   FREQUENCY, Center Freq, 100 kHz (*50* Ω Input)
   FREQUENCY, Center Freq, 1 MHz (*75* Ω Input)
   CF Step, 100 MHz
   SPAN, 20 kHz
   AMPLITUDE, More, Int Preamp (On)
   AMPLITUDE, **More**, **Y Axis Units** (or **Amptd Units**), **dBm**
   AMPLITUDE, **Ref Level**, **–30 dBm**
   Attenuation, **0 dB** (Man)
   Scale/Div, 2 dB
   BW/Avg, **Res BW**, **3 kHz** (Man)
   Video BW, 3 kHz (Man)

5. On the analyzer, press **Peak Search** (or **Search**).

6. Adjust the source amplitude to obtain a marker amplitude reading on the analyzer of –32.00 dBm ±0.2 dB.

7. Record the current Channel B power reading in Table 2-58 as the Current Channel B reading.

ManualsPlus.com

8. Record the marker (`Mkr1`) amplitude reading in Table 2-58.
9. Set the source to the next frequency listed in Table 2-58.
10. Set the analyzer center frequency to the next frequency listed in Table 2-58.
11. On the analyzer, press **Peak Search** (or **Search**).
12. Adjust the source amplitude to obtain a marker amplitude reading on the analyzer of –32.00 dBm ±0.2 dB.
13. Record the current Channel B power reading in Table 2-58 as the Current Channel B reading.
14. Record the marker (`Mkr1`) amplitude reading in Table 2-58 as marker (`Mkr1`) Amptd.
15. Repeat step 9 through step 14 for each frequency in Table 2-58.
16. Copy the splitter tracking errors from Table 2-57 into Table 2-58.
17. Calculate the Flatness Error for each frequency in Table 2-58 as follows:

    $$\text{Flatness Error} = \text{Mkr1 Amptd}_{dBm} - \text{Current Channel B}_{dBm} - \text{Splitter Tracking Error}_{dB}$$

    For example, if marker (`Mkr1`) Amptd is –33.32 dBm, Current Channel B is –12.4 dBm, and Splitter Tracking Error is –20.07 dB, Flatness Error would be –0.85 dB.
18. Record the Flatness Error for 50 MHz below as the 50 MHz Ref Amptd:

    50 MHz Ref Amptd _____
19. Calculate the Flatness Relative to 50 MHz for each frequency in Table 2-58 as follows:

    Flatness Relative to 50 MHz = Flatness Error – 50 MHz Ref Amptd

    For example, if Flatness Error is –0.30 dB and 50 MHz Ref Amptd is 0.15 dB, Flatness Relative to 50 MHz would be –0.45 dB.

Table 2-58 Frequency Response Worksheet, Preamp On

Frequency	Current Channel B Reading	Marker (Mkr1) Amptd	Splitter Tracking Error	Flatness Error	Flatness Relative to 50 MHz
100 kHz[a]					
500 kHz[a]					
1 MHz					
5 MHz					

ManualsPlus.com

Table 2-58 Frequency Response Worksheet, Preamp On

Frequency	Current Channel B Reading	Marker (Mkr1) Amptd	Splitter Tracking Error	Flatness Error	Flatness Relative to 50 MHz
10 MHz					
20 MHz					
50 MHz					0 dB (Ref)
75 MHz					
175 MHz					
275 MHz					
375 MHz					
475 MHz					
575 MHz					
675 MHz					
775 MHz					
825 MHz					
875 MHz					
925 MHz					
975 MHz					
1025 MHz					
1075 MHz					
1175 MHz					
1275 MHz					
1375 MHz					
1500 MHz					

a. These values do not apply to analyzers with 75 Ω inputs (Option 1DP).

Test Results

1. Record the most positive number from the Flatness Relative to 50 MHz column of Table 2-58 as the Maximum Response in Table 2-59 and as Entry 1 in the performance verification test record.
2. Record the most negative number from the Flatness Relative to 50 MHz column of Table 2-58 as the Minimum Response in Table 2-59 and as Entry 2 in the performance verification test record.

ManualsPlus.com

3. In Table 2-59, subtract the Minimum Response value from the Maximum Response value and record the result in the Peak-to-Peak Response column, and as Entry 3 in the performance verification test record.

Table 2-59 Frequency Response Results

Maximum Response		Minimum Response		Peak-to-Peak Response	
dB	**Test Record Entry**	**dB**	**Test Record Entry**	**dB**	**Test Record Entry**
	1)		2)		3)

ManualsPlus.com

26. Frequency Response (Preamp On): Agilent E4402B

This test measures the amplitude error of the analyzer as a function of frequency. The output of a source is fed through a power splitter to a power sensor and the analyzer. The power level of the source is adjusted at 50 MHz to place the displayed signal at approximately –32 dBm. At each new source frequency and analyzer center frequency, the power level of the source is adjusted to place the signal at approximately –32 dBm.

For improved amplitude accuracy the power splitter is characterized using a power sensor (the “reference” sensor) connected to one power splitter output port. The other power splitter output port connects to the “buried” sensor; it is not removed from the power splitter. Once the characterization is done, the reference sensor is removed and replaced by the analyzer.

This procedure only tests frequency response with the optional preamplifier (Option 1DS) turned on. Perform the “Frequency Response” procedure to test all other frequency response specifications.

The related adjustment for this performance test is “Frequency Response.”

Equipment Required

Function generator
Synthesized sweeper
Power meter
RF power sensor (*2 required*)
20 dB fixed attenuator
Power splitter
Cable, Type-N (m), 183 cm
Cable, BNC, 120 cm
Adapter, Type-N (m) to Type-N (m)
Adapter, Type-N (m) to BNC (f)

Procedure

Source/Splitter Characterization

1. Connect one RF power sensor to Channel A of the power meter. This will be the “reference” sensor. Connect the other RF power sensor to Channel B of the power meter. This will be the “buried” sensor.
2. Zero and calibrate both power sensors.
3. On the power meter, set the Channel A calibration factor to the

ManualsPlus.com

calibration factor of the reference sensor at 1 MHz.

4. On the power meter, set the Channel B calibration factor to 100%. Do not change this calibration factor during this test.
5. Connect the equipment as shown in Figure 2-38. Use the function generator as the source. Note that the reference sensor connects to the 20 dB fixed attenuator.

Figure 2-38 Source/Splitter Characterization Setup

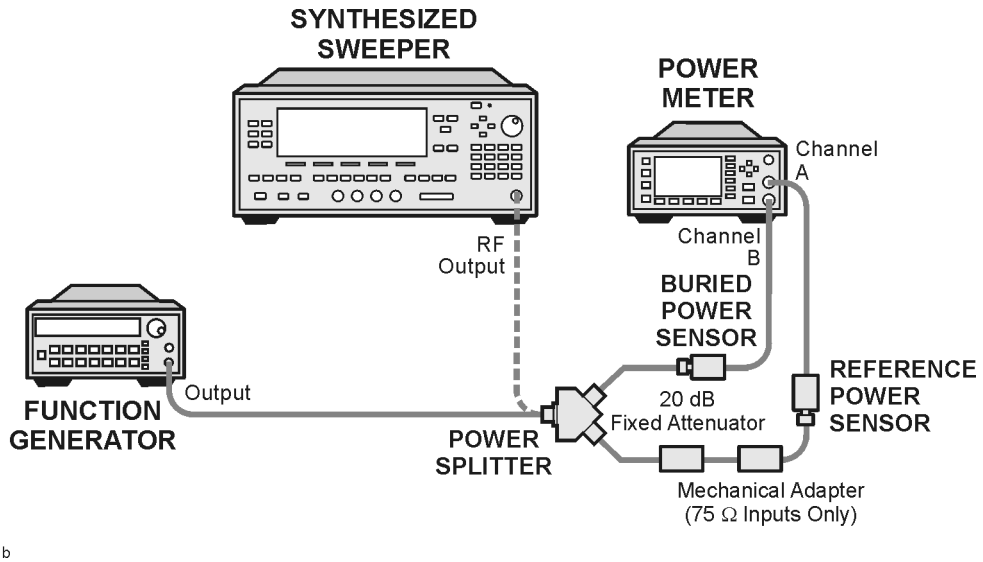

6. Set the function generator frequency to 1 MHz and amplitude to 450 mV rms (approximately 6 dBm).
7. Adjust the source amplitude to obtain a Channel A power meter reading of –20 dBm ±0.1 dB.
8. Record the Channel A and Channel B power meter readings in Table 2-60.
9. Tune the source to the next frequency in Table 2-60.
10. On the power meter, set the Channel A calibration factor to the calibration factor of the reference sensor for the current source frequency.
11. Adjust the source amplitude to obtain a Channel A power meter reading of –20 dBm ±0.1 dB.
12. Record the Channel A and Channel B power meter readings in Table 2-60.
13. Repeat step 9 through step 12 for frequencies up through 10 MHz.
14. Replace the function generator with the synthesized sweeper.

ManualsPlus.com

15. Set the synthesized sweeper CW frequency to 10 MHz and the amplitude to 6 dBm.
16. Adjust the synthesized sweeper power level to obtain a Channel A power meter reading of –20 dBm ±0.1 dB.
17. Record both Channel A and Channel B power meter readings in Table 2-60.
18. Repeat step 9 through step 12 for each remaining frequency in Table 2-60.
19. For each entry in Table 2-60, calculate the Splitter Tracking Error as follows:

    Splitter Tracking Error = Channel A Power – Channel B Power

    For example, if Channel A Power is –20.3 dBm and Channel B power is –0.23 dBm, the splitter tracking error is –20.07 dB.

Table 2-60 Source/Splitter Characterization

Frequency	Power Meter Reading		Splitter Tracking Error
	Channel A	Channel B	
1 MHz			
5 MHz			
10 MHz[a]			
10 MHz[b]			
20 MHz			
50 MHz			
75 MHz			
175 MHz			
275 MHz			
375 MHz			
475 MHz			
575 MHz			
675 MHz			
775 MHz			
825 MHz			
875 MHz			
925 MHz			

ManualsPlus.com

Table 2-60 Source/Splitter Characterization

Frequency	Power Meter Reading		Splitter Tracking Error
	Channel A	Channel B	
975 MHz			
1025 MHz			
1075 MHz			
1175 MHz			
1275 MHz			
1375 MHz			
1500 MHz			
1525 MHz			
1675 MHz			
1725 MHz			
1775 MHz			
1825 MHz			
1875 MHz			
1925 MHz			
1975 MHz			
2025 MHz			
2125 MHz			
2325 MHz			
2525 MHz			
2725 MHz			
2925 MHz			
2999 MHz			

a. This entry is for data taken with the function generator as source.
b. This entry is for data taken with the synthesized sweeper as source.

Measuring Frequency Response, Preamp On

1. Refer to Figure 2-39. Remove the reference sensor (Channel A sensor) from the 20 dB fixed attenuator. Connect the 20 dB fixed attenuator to the 50 Ω Input of the analyzer using an adapter. Do not

ManualsPlus.com

use a cable.

2. Set the source frequency to 10 MHz.
3. Set the source power level to –6 dBm.

Figure 2-39 Frequency Response Test Setup, Preamp On

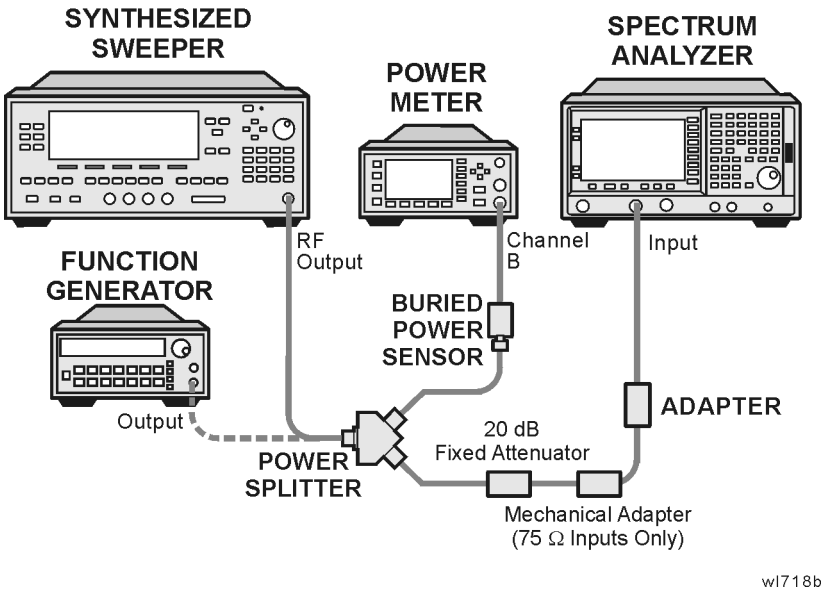

4. Press **Preset** on the analyzer. Press the **Factory Preset** softkey, if it is displayed. Set the controls as follows:

   FREQUENCY, Center Freq, 10 MHz
   CF Step, 100 MHz
   SPAN, 20 kHz
   Input/Output (or Input), Coupling (DC) (*Option UKB only*)
   AMPLITUDE, More, Int Preamp, On
   AMPLITUDE, Ref Level, –30 dBm
   Attenuation, 0 dB (Man)
   Scale/Div, 2 dB
   BW/Avg, Res BW, 3 kHz (Man)
   Video BW, 3 kHz (Man)

5. On the analyzer, press **Peak Search** (or **Search**).
6. Adjust the source power level to obtain a marker amplitude reading on the analyzer of –32.00 dBm ±0.2 dB.
7. Record the current Channel B power reading in Table 2-61 as the Current Channel B Reading.
8. Record the marker (`Mkr1`) amplitude reading in Table 2-61.
9. Set the source to the next frequency listed in Table 2-61.

ManualsPlus.com

10. Set the analyzer center frequency to the next frequency listed in Table 2-61.

11. On the analyzer, press **Peak Search** (or **Search**).

12. Adjust the source power level to obtain a marker amplitude reading on the analyzer of –32.00 dBm ±0.2 dB.

13. Record the current Channel B power reading in Table 2-61 as the current Channel B reading.

14. Record the marker (`Mkr1`) amplitude reading in Table 2-61.

15. Repeat step 9 through step 14 for each remaining frequency in Table 2-61.

16. Replace the synthesized sweeper with the function generator.

17. Set the function generator amplitude to 112 mV rms (–6 dBm, or –12 dBm plus nominal power splitter insertion loss).

18. Set the function generator frequency to 1 MHz.

19. Set the analyzer center frequency to 1 MHz.

20. On the analyzer, press **Peak Search** (or **Search**).

21. Adjust the function generator amplitude to obtain a marker amplitude reading of –32.00 dBm ±0.2 dB.

22. Record the current Channel B power reading in Table 2-61 as the current Channel B reading.

23. Record the analyzer marker (`Mkr1`) amplitude reading in Table 2-61 as marker (`Mkr1`) amplitude.

24. Repeat step 18 through step 23 for frequencies between 100 kHz and 10 MHz.

25. Copy the Splitter Tracking Error values from Table 2-60 into Table 2-61.

26. Calculate the Flatness Error for each frequency in Table 2-61 as follows:

$$\text{Flatness Error} = \text{Mkr1 Amptd}_{\text{dBm}} - \text{Current Channel B}_{\text{dBm}} - \text{Splitter Tracking Error}_{\text{dB}}$$

For example, if marker (`Mkr1`) Amptd is –33.32 dBm, Current Channel B is –12.4 dBm, and Splitter Tracking Error is –20.07 dB, Flatness Error would be –0.85 dB.

27. Record the Flatness Error for 50 MHz below as the 50 MHz Ref Amptd:

50 MHz Ref Amptd: _____ dB

28. Calculate the Setup Change Error (error due to changing the test setup from using a synthesized sweeper to using a function

ManualsPlus.com

generator) as follows:

a. Record the Flatness Error from Table 2-61 at 10 MHz using the function generator as $FlatError_{FG}$:

$FlatError_{FG}$=_____ dB

b. Record the Flatness Error from Table 2-61 at 10 MHz using the synthesized sweeper as $FlatError_{SS}$:

$FlatError_{SS}$=_____ dB

c. Subtract $FlatError_{SS}$ from $FlatError_{FG}$ and record the result as the Setup Change Error:

$$\text{Setup Change Error} = FlatError_{FG} - FlatError_{SS}$$

Setup Change Error =_____ dB

29. For frequencies less than 10 MHz calculate the Flatness Relative to 50 MHz for each frequency in Table 2-61 as follows:

$$\text{Flatness Relative to 50 MHz} = \text{Flatness Error} - \text{50 MHz Ref Amptd} - \text{Setup Change Error}$$

For example, if Flatness Error is –0.30 dB, 50 MHz Ref Amptd is 0.15 dB, and Setup Change Error is –0.19 dB, Flatness Relative to 50 MHz would be –0.26 dB.

30. For frequencies 10 MHz and greater, calculate the Flatness Relative to 50 MHz for each frequency in Table 2-61 as follows:

$$\text{Flatness Relative to 50 MHz} = \text{Flatness Error} - \text{50 MHz Ref Amptd}$$

For example, if Flatness Error is –0.30 dB and 50 MHz Ref Amptd is 0.15 dB, Flatness Relative to 50 MHz would be –0.45 dB.

Table 2-61 Frequency Response Worksheet, Preamp On

Frequency	Current Channel B Reading	Mkr1 Amptd	Splitter Tracking Error	Flatness Error	Flatness Relative to 50 MHz
1 MHz					
5 MHz					
10 MHz[a]					
10 MHz[b]					
20 MHz					
50 MHz					0 dB (Ref)
75 MHz					

ManualsPlus.com

Table 2-61 Frequency Response Worksheet, Preamp On

Frequency	Current Channel B Reading	Mkr1 Amptd	Splitter Tracking Error	Flatness Error	Flatness Relative to 50 MHz
175 MHz					
275 MHz					
375 MHz					
475 MHz					
575 MHz					
675 MHz					
775 MHz					
825 MHz					
875 MHz					
925 MHz					
975 MHz					
1025 MHz					
1075 MHz					
1175 MHz					
1275 MHz					
1375 MHz					
1500 MHz					
1525 MHz					
1675 MHz					
1725 MHz					
1775 MHz					
1825 MHz					
1875 MHz					
1925 MHz					
1975 MHz					
2025 MHz					
2125 MHz					
2325 MHz					

ManualsPlus.com

Table 2-61 Frequency Response Worksheet, Preamp On

Frequency	Current Channel B Reading	Mkr1 Amptd	Splitter Tracking Error	Flatness Error	Flatness Relative to 50 MHz
2525 MHz					
2725 MHz					
2925 MHz					
2999 MHz					

a. This entry is for data taken with the function generator as source.
b. This entry is for data taken with the synthesized sweeper as source.

Test Results

1. Record the most positive number from the Flatness Relative to 50 MHz column of Table 2-61 as the Maximum Response for Band 0 in Table 2-62.
2. Record the most negative number from the Flatness Relative to 50 MHz column of Table 2-61 as the Minimum Response for Band 0 in Table 2-62.
3. For Band 0 in Table 2-62, subtract the Minimum Response value from the Maximum Response value and record the result in the Peak-to-Peak Response column.
4. If the analyzer is an Agilent E4402B with a serial number greater than or equal to US39441006 then continue with the next step. Otherwise, transfer the values entered in Table 2-62 to the test record in this guide; the frequency response test is now complete.
5. Note the most positive number from the Flatness Relative to 50 MHz column of Table 2-61 for frequencies between 800 MHz and 1.0 GHz. Record this number in Table 2-62 as the Maximum Response for Band 0A.
6. Note the most negative number from the Flatness Relative to 50 MHz column of Table 2-61 for frequencies between 800 MHz and 1.0 GHz. Record this number in Table 2-62 as the Minimum Response for Band 0A.
7. For Band 0A in Table 2-62, subtract the Minimum Response value from the Maximum Response value and record the result in the Peak-to-Peak Response column.
8. Note the most positive number from the Flatness Relative to 50 MHz column of Table 2-61 for frequencies between 1.7 GHz and 2.0 GHz. Record this number in Table 2-62 as the Maximum Response for Band 0B.

ManualsPlus.com

9. Note the most negative number from the Flatness Relative to 50MHz column of Table 2-61 for frequencies between 1.7 GHz and 2.0 GHz. Record this number in Table 2-62 as the Minimum Response for Band 0B.
10. For Band 0B in Table 2-62, subtract the Minimum Response value from the Maximum Response value and record the result in the Peak-to-Peak Response column.
11. Transfer the values entered in Table 2-62 to the test record in this guide.
12. The frequency response test is now complete.

Table 2-62 Frequency Response Results

Band	Maximum Response		Minimum Response		Peak-to-Peak Response	
	dB	Test Record Entry	dB	Test Record Entry	dB	Test Record Entry
0		1)		2)		3)
0A		4)		5)		6)
0B		7)		8)		9)

ManualsPlus.com

27. Frequency Response (Preamp On): Agilent E4404B, E4405B, and E4407B

This test measures the amplitude error of the analyzer as a function of frequency. The output of a source is fed through a power splitter to a power sensor and the analyzer. The power level of the source is adjusted at 50 MHz to place the displayed signal at approximately –32 dBm. At each new source frequency and analyzer center frequency, the power level of the source is adjusted to place the signal at approximately –32 dBm.

For improved amplitude accuracy the power splitter is characterized using a power sensor (the “reference” sensor) connected to one power splitter output port. The other power splitter output port connects to the “buried” sensor; it is not removed from the power splitter. Once the characterization is done, the reference sensor is removed and replaced by the analyzer.

This procedure only tests frequency response with the optional preamplifier (Option 1DS) turned on. Perform the “Frequency Response” procedure to test all other frequency response specifications.

The related adjustment for this performance test is “Frequency Response.”

Equipment Required

Function generator
Synthesized sweeper
Power meter
RF power sensor (*2 required*)
20 dB fixed attenuator
Power splitter
Cable, Type-N (m), 183 cm
Cable, BNC, 120 cm
Adapter, Type-N (m) to Type-N (m)
Adapter, Type-N (m) to BNC (f)

Additional Equipment for Option BAB

Adapter, Type-N (m) to APC 3.5 (f)

Procedure

Source/Splitter Characterization

1. Connect one RF power sensor to Channel A of the power meter. This will be the “reference” sensor. Connect the other RF power sensor to

ManualsPlus.com

Channel B of the power meter. This will be the “buried” sensor.

2. Zero and calibrate both power sensors.
3. On the power meter, set the Channel A calibration factor to the calibration factor of the reference sensor at 1 MHz.
4. On the power meter, set the Channel B calibration factor to 100%. Do not change this calibration factor during this test.
5. Connect the equipment as shown in Figure 2-40. Use the function generator as the source. Note that the reference sensor connects to the 20 dB fixed attenuator.

Figure 2-40 Source/Splitter Characterization Setup

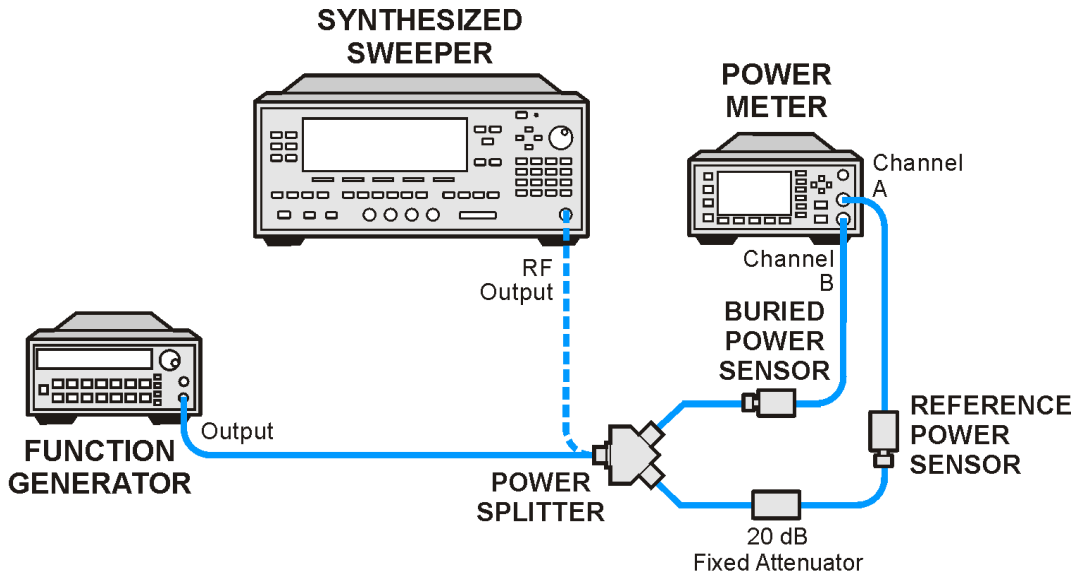

wb922a

6. Set the function generator frequency to 1 MHz and amplitude to 446 mV rms (approximately 6 dBm).
7. Adjust the source amplitude to obtain a Channel A power meter reading of –20 dBm ±0.1 dB.
8. Record the Channel A and Channel B power meter readings in Table 2-63.
9. Tune the source to the next frequency in Table 2-63.
10. On the power meter, set the Channel A calibration factor to the calibration factor of the reference sensor for the current source frequency.
11. Adjust the source amplitude to obtain a Channel A power meter reading of –20 dBm ±0.1 dB.
12. Record the Channel A and Channel B power meter readings in

ManualsPlus.com

Table 2-63.

13. Repeat step 9 through step 12 for frequencies up through 10 MHz.
14. Replace the function generator with the synthesized sweeper.
15. Set the synthesized sweeper CW frequency to 10 MHz and the amplitude to 6 dBm.
16. Adjust the synthesized sweeper power level to obtain a Channel A power meter reading of –20 dBm ±0.1 dB.
17. Record the synthesized sweeper power level and both Channel A and Channel B power meter readings in Table 2-63.
18. Repeat step 9 through step 12 for each remaining frequency in Table 2-63.
19. For each entry in Table 2-63, calculate the Splitter Tracking Error as follows:

    Splitter Tracking Error = Channel A Power – Channel B Power

    For example, if Channel A Power is –20.3 dBm and Channel B power is –0.23 dBm, the splitter tracking error is –20.07 dB.

Table 2-63 Source/Splitter Characterization

Frequency	Power Meter Reading		Splitter Tracking Error
	Channel A	Channel B	
1 MHz			
5 MHz			
10 MHz[a]			
10 MHz[b]			
20 MHz			
50 MHz			
75 MHz			
175 MHz			
275 MHz			
375 MHz			
475 MHz			
575 MHz			
675 MHz			

ManualsPlus.com

Table 2-63 Source/Splitter Characterization

Frequency	Power Meter Reading		Splitter Tracking Error
	Channel A	Channel B	
775 MHz			
825 MHz			
875 MHz			
925 MHz			
975 MHz			
1025 MHz			
1075 MHz			
1175 MHz			
1275 MHz			
1375 MHz			
1500 MHz			
1525 MHz			
1675 MHz			
1725 MHz			
1775 MHz			
1825 MHz			
1875 MHz			
1925 MHz			
1975 MHz			
2025 MHz			
2125 MHz			
2325 MHz			
2525 MHz			
2725 MHz			
2925 MHz			
2999 MHz			

a. This entry is for data taken with the function generator as source.

ManualsPlus.com

b. This entry is for data taken with the synthesized sweeper as source.

Measuring Frequency Response, Preamp On

1. Refer to Figure 2-41. Remove the reference sensor (Channel A sensor) from the 20 dB fixed attenuator. Connect the 20 dB fixed attenuator to the 50 Ω Input of the analyzer using an adapter. Do not use a cable.

Figure 2-41 Frequency Response Test Setup, Preamp On

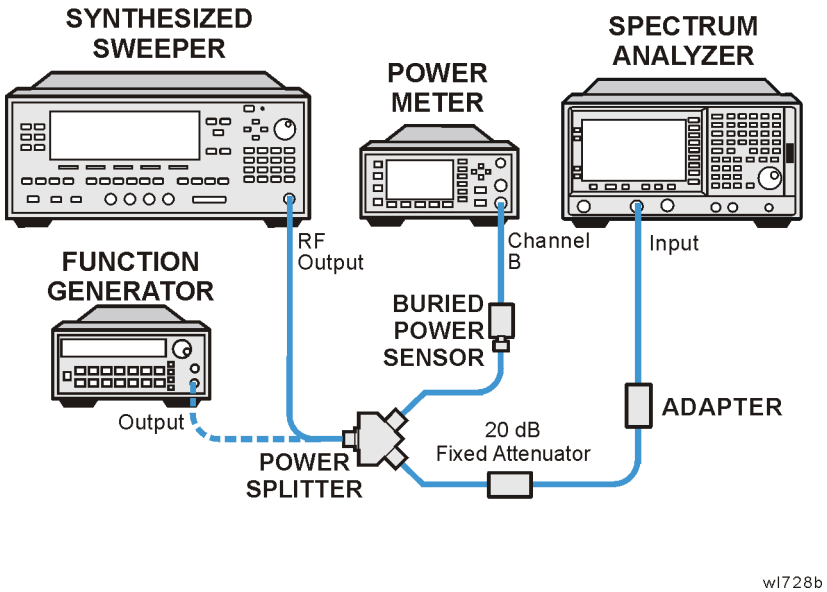

2. Set the source frequency to 10 MHz.
3. Set the source power level to –6 dBm.
4. Press **Preset** on the analyzer. Press the **Factory Preset** softkey, if it is displayed. Set the controls as follows:

   FREQUENCY, Center Freq, 10 MHz
   CF Step, 100 MHz
   SPAN, 20 kHz
   Input/Output (or **Input**), **Coupling**, (DC) (*Agilent E4404B, E4405B, or any model with Option UKB*)
   AMPLITUDE, More, Int Preamp, On

   AMPLITUDE, **Ref Level**, **–30 dBm**
   Attenuation, **0 dB** (Man)
   Scale/Div, 2 dB
   BW/Avg, **Res BW**, **3 kHz** (Man)
   Video BW, 3 kHz (Man)

ManualsPlus.com

5. On the analyzer, press **Peak Search** (or **Search**).
6. Adjust the source power level to obtain a marker amplitude reading on the analyzer of –32.00 dBm ±0.2 dB.
7. Record the current Channel B power reading in Table 2-64 as the Current Channel B Reading for ac or dc coupling, as appropriate. If the analyzer does not have switchable ac/dc coupling, enter all data into the dc columns.
8. Record the marker (`Mkr1`) amplitude reading in Table 2-64.
9. Set the source to the next frequency listed in Table 2-64.
10. Set the analyzer center frequency to the next frequency listed in Table 2-64.
11. On the analyzer, press **Peak Search** (or **Search**).
12. Adjust the source power level to obtain a marker amplitude reading on the analyzer of –32.00 dBm ±0.2 dB.
13. Record the current Channel B power reading in Table 2-64 as the current Channel B reading in the ac or dc column, as appropriate.
14. Record the marker (`Mkr1`) amplitude reading in Table 2-64.
15. Repeat step 9 through step 14 for each remaining frequency in Table 2-64.
16. If the analyzer is an Agilent E4407B with Option UKB and is being tested in ac coupled mode, continue with step 26. These analyzers are specified only down to 10 MHz in ac coupled mode.
17. Replace the synthesized sweeper with the function generator.
18. Set the function generator amplitude to 112 mV rms (–6 dBm, or –12 dBm plus nominal power splitter insertion loss).
19. Set the function generator frequency to 1 MHz.
20. Set the analyzer center frequency to 1 MHz.
21. On the analyzer, press **Peak Search** (or **Search**).
22. Adjust the function generator amplitude to obtain a marker amplitude reading of –00 dBm ±0.2 dB.
23. Record the current Channel B power reading in Table 2-64 as the current Channel B reading.
24. Record the analyzer marker (`Mkr1`) amplitude reading in Table 2-64 as marker (`Mkr1`) amplitude.
25. Repeat step 19 through step 24 for frequencies between 1 MHz and 10 MHz.
26. Copy the Splitter Tracking Error values from Table 2-63 into Table 2-64.

ManualsPlus.com

27. Calculate the Flatness Error for each frequency in Table 2-64 as follows:

$$\text{Flatness Error} = \text{Mkr1 Amptd}_{dBm} - \text{Current Channel B}_{dBm} - \text{Splitter Tracking Error}_{dB}$$

For example, if marker (`Mkr1`) Amptd is –33.32 dBm, Current Channel B is –12.4 dBm, and Splitter Tracking Error is –20.07 dB, Flatness Error would be –0.85 dB.

28. Record the Flatness Error for 50 MHz below as the 50 MHz Ref Amptd:

50 MHz Ref Amptd: _____

29. If the analyzer is an Agilent E4407B with Option UKB and is being tested in ac coupled mode, continue with step 31. Calculate the Setup Change Error (error due to changing the test setup from using a synthesized sweeper to using a function generator) as follows:

a. Record the Flatness Error from Table 2-64 at 10 MHz using the function generator as FlatError_{FG}:

FlatError_{FG}=_____ dB

b. Record the Flatness Error from Table 2-64 at 10 MHz using the synthesized sweeper as FlatError_{SS}:

FlatError_{SS}=_____ dB

c. Subtract FlatError_{SS} from FlatError_{FG} and record the result as the Setup Change Error:

$$\text{Setup Change Error} = \text{FlatError}_{FG} - \text{FlatError}_{SS}$$

Setup Change Error =_____ dB

30. For frequencies less than 10 MHz calculate the Flatness Relative to 50 MHz for each frequency in Table 2-64 as follows:

$$\text{Flatness Relative to 50 MHz} = \text{Flatness Error} - \text{50 MHz Ref Amptd} - \text{Setup Change Error}$$

For example, if Flatness Error is –0.30 dB, 50 MHz Ref Amptd is 0.15 dB, and Setup Change Error is –0.19 dB, Flatness Relative to 50 MHz would be –0.26 dB.

31. For frequencies 10 MHz and greater, calculate the Flatness Relative to 50 MHz for each frequency in Table 2-64 as follows:

$$\text{Flatness Relative to 50 MHz} = \text{Flatness Error} - \text{50 MHz Ref Amptd}$$

For example, if Flatness Error is –0.30 dB and 50 MHz Ref Amptd is 0.15 dB, Flatness Relative to 50 MHz would be –0.45 dB.

32. Replace the function generator with the synthesized sweeper.

ManualsPlus.com

33. If the analyzer is an Agilent E4407B with Option UKB then repeat step 2 through step 31 using ac coupled mode.

ManualsPlus.com

Table 2-64 Frequency Response Worksheet, Preamp On

Freq. (MHz)	Splitter Tracking Error	Current Channel B Reading		Marker (Mkr1) Amptd		Flatness Error		Flatness Relative to 50 MHz	
		dc	ac	dc	ac	dc	ac	dc	ac
1[a]									
5[a]									
10[ab]									
10[c]									
20									
50								0 dB (ref)	0 dB (ref)
75									
175									
275									
375									
475									
575									
675									
775									
825									
875									
925									
975									
1025									
1075									
1175									
1275									
1375									
1500									
1525									
1675									

ManualsPlus.com

Table 2-64 Frequency Response Worksheet, Preamp On

Freq. (MHz)	Splitter Tracking Error	Current Channel B Reading		Marker (Mkr1) Amptd		Flatness Error		Flatness Relative to 50 MHz	
		dc	ac	dc	ac	dc	ac	dc	ac
1725									
1775									
1825									
1875									
1925									
1975									
2025									
2125									
2325									
2525									
2725									
2925									
2999									

a. This frequency is not tested on Agilent E4407B analyzers with Option UKB when in ac coupled mode.
b. This entry is for data taken with the function generator as source.
c. This entry is for data taken with the synthesized sweeper as source.

Test Results

1. Record the most positive number from the Flatness Relative to 50 MHz (dc) column of Table 2-64 as the Maximum Response for Band 0 in Table 2-65.
2. Record the most negative number from the Flatness Relative to 50 MHz (dc) column of Table 2-64 as the Minimum Response for Band 0 in Table 2-65.
3. For Band 0 in Table 2-65, subtract the Minimum Response value from the Maximum Response value and record the result in the Peak-to-Peak Response column.
4. If the analyzer is an Agilent E4404B with a serial number greater than or equal to US39440498 then continue with step 8. Otherwise, transfer the values entered in Table 2-65 to the test record in this guide; the frequency response test is now complete.

ManualsPlus.com

5. If the analyzer is an Agilent E4405B with a serial number greater than or equal to US39440327 then continue with step 8. Otherwise, transfer the values entered in Table 2-65 to the test record in this guide; the frequency response test is now complete.
6. If the analyzer is an Agilent E4407B with a serial number greater than or equal to US39440871 and does not have Option UKB then continue with step 8. Otherwise, transfer the values entered in Table 2-65 to the test record in this guide; the frequency response test is now complete.
7. If the analyzer is an Agilent E4407B with Option UKB, continue with step 16.
8. Note the most positive number from the Flatness Relative to 50 MHz (dc) column of Table 2-64 for frequencies between 800 MHz and 1.0 GHz. Record the number in Table 2-65 as the Maximum Response for Band 0A.
9. Note the most negative number from the Flatness Relative to 50 MHz (dc) column of Table 2-64 for frequencies between 800 MHz and 1.0 GHz. Record the number in Table 2-65 as the Minimum Response for Band 0A.
10. For Band 0A in Table 2-65, subtract the Minimum Response value from the Maximum Response value and record the result in the Peak-to-Peak Response column.
11. Note the most positive number from the Flatness Relative to 50 MHz (dc) column of Table 2-64 for frequencies between 1.7 GHz and 2.0 GHz. Record the number in Table 2-65 as the Maximum Response for Band 0B.
12. Note the most negative number from the Flatness Relative to 50 MHz (dc) column of Table 2-64 for frequencies between 1.7 GHz and 2.0 GHz. Record the number in Table 2-65 as the Minimum Response for Band 0B.
13. For Band 0B in Table 2-65, subtract the Minimum Response value from the Maximum Response value and record the result in the Peak-to-Peak Response column.
14. Transfer the values entered in Table 2-65 to the test record in this guide.

ManualsPlus.com

15. The frequency response (preamp on) test is now complete.

Table 2-65 Frequency Response Results, dc Coupled

Band	Maximum Response		Minimum Response		Peak-to-Peak Response	
	dB	Test Record Entry	dB	Test Record Entry	dB	Test Record Entry
0		1)		2)		3)
0A		4)		5)		6)
0B		7)		8)		9)

16. Note the most positive number from the Flatness Relative to 50 MHz (ac) column of Table 2-64. Record the number in Table 2-66 as the Maximum Response for Band 0.

17. Note the most negative number from the Flatness Relative to 50 MHz (ac) column of Table 2-64. Record the number in Table 2-66 as the Minimum Response for Band 0.

18. For Band 0 in Table 2-66, subtract the Minimum Response value from the Maximum Response value and record the result in the Peak-to-Peak Response column.

19. Note the most positive number from the Flatness Relative to 50 MHz (ac) column of Table 2-64 for frequencies between 800 MHz and 1.0 GHz. Record the number in Table 2-66 as the Maximum Response for Band 0A.

20. Note the most negative number from the Flatness Relative to 50 MHz (ac) column of Table 2-64 for frequencies between 800 MHz and 1.0 GHz. Record the number in Table 2-66 as the Minimum Response for Band 0A.

21. For Band 0A in Table 2-66, subtract the Minimum Response value from the Maximum Response value and record the result in the Peak-to-Peak Response column.

22. Note the most positive number from the Flatness Relative to 50 MHz (ac) column of Table 2-64 for frequencies between 1.7 GHz and 2.0 GHz. Record the number in Table 2-66 as the Maximum Response for Band 0B.

23. Note the most negative number from the Flatness Relative to 50 MHz (ac) column of Table 2-64 for frequencies between 1.7 GHz and 2.0 GHz. Record the number in Table 2-66 as the Minimum Response for Band 0B.

24. For Band 0B in Table 2-66, subtract the Minimum Response value from the Maximum Response value and record the result in the Peak-to-Peak Response column.

ManualsPlus.com

25. Transfer the values entered in Table 2-66 to the test record in this guide.

26. The frequency response (preamp on) test is now complete.

Table 2-66 Frequency Response Results, Agilent E4407B Option UKB

Band	Maximum Response		Minimum Response		Peak-to-Peak Response	
	dB	Test Record Entry	dB	Test Record Entry	dB	Test Record Entry
0		10)		11)		12)
0A		13)		14)		15)
0B		16)		17)		18)

ManualsPlus.com

28. Other Input-Related Spurious Responses: Agilent E4401B and E4411B

This test measures the ability of the analyzer to reject image and multiple responses. A synthesized source and the analyzer are set to the same frequency and the amplitude of the source is set to –20 dBm. A marker amplitude reference is set on the analyzer. The source is then tuned to several different frequencies which should generate image and multiple responses. At each source frequency, the source amplitude is set to –20 dBm and the amplitude of the response, if any, is measured using the analyzer marker functions.

There are no related adjustment procedures for this performance test.

Equipment Required

Synthesized signal generator
Power meter
RF power sensor
Adapter, Type-N (f) to APC 3.5 (f)
Adapter, Type-N (f) to Type-N (f)
Cable, Type-N, 152-cm (60-in)

Additional Equipment for 75 Ω Input

Power sensor, 75 Ω
Adapter, Type-N (f), to BNC (m), 75 Ω
Adapter, BNC (m), to BNC (m), 75 Ω
Pad, minimum loss

Procedure

1. Zero and calibrate the power meter and RF power sensor in log mode (power reads out in dBm), as described in the power meter operation manual. Enter the 500 MHz calibration factor of the power sensor into the power meter.

   75 Ω Input only: Use a 75 Ω power sensor.

2. Press **Preset** on the synthesized sweeper and set the controls as follows:

   CW, **542.8 MHz**
   POWER LEVEL, **–10 dBm**

3. Connect the equipment as shown in Figure 2-42 with the output of the synthesized sweeper connected to the power sensor using an adapter between the cable and the power sensor.

ManualsPlus.com

75 Ω Input only: Use the minimum loss pad and 75 Ω adapters to connect to the 75 Ω power sensor.

4. Adjust the power level of the synthesized sweeper for a –10 dBm ±0.1 dB reading on the power meter.
5. On the synthesized sweeper, press **SAVE**, **1**.

Figure 2-42 Other Input Related Spurious Responses Power Setting Setup

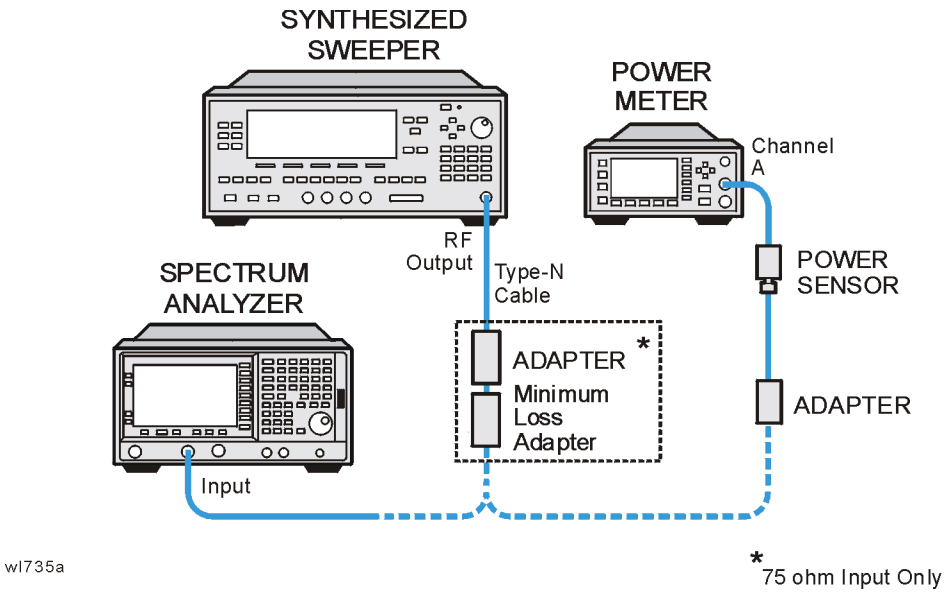

6. Set the CW frequency on the synthesized sweeper to 510.7 MHz.
7. Adjust the synthesized sweeper power level for a –10 dBm ±0.1 dB reading on the power meter.
8. On the synthesized sweeper, press **SAVE 2**.
9. Enter the 1 GHz calibration factor for the power sensor into the power meter.
10. Set the CW frequency on the synthesized sweeper to 1310.7 MHz.
11. Adjust the synthesized sweeper power level for a –10 dBm ±0.1 dB reading on the power meter.
12. On the synthesized sweeper, press **SAVE 3.**
13. Enter the 100 MHz calibration factor of the power sensor into the power meter.
14. Set the CW frequency of the synthesized sweeper to 100 MHz.
15. Adjust the synthesized sweeper power level for a –10 dBm ±0.1 dB reading on the power meter.

ManualsPlus.com

16. On the synthesized sweeper, press **SAVE 4.**

17. Set the CW frequency on the synthesized sweeper to 500 MHz.

18. Adjust the power level of the synthesized sweeper for a –10 dBm ±0.1 dB reading on the power meter.

19. Connect the synthesized sweeper to the Input of the analyzer using the appropriate cable and adapters. See Figure 2-43.

    75 Ω Input only: Use the minimum loss pad and a 75 Ω adapter as shown in Figure 2-43.

Figure 2-43 Other Input Related Spurious Responses Measurement Setup

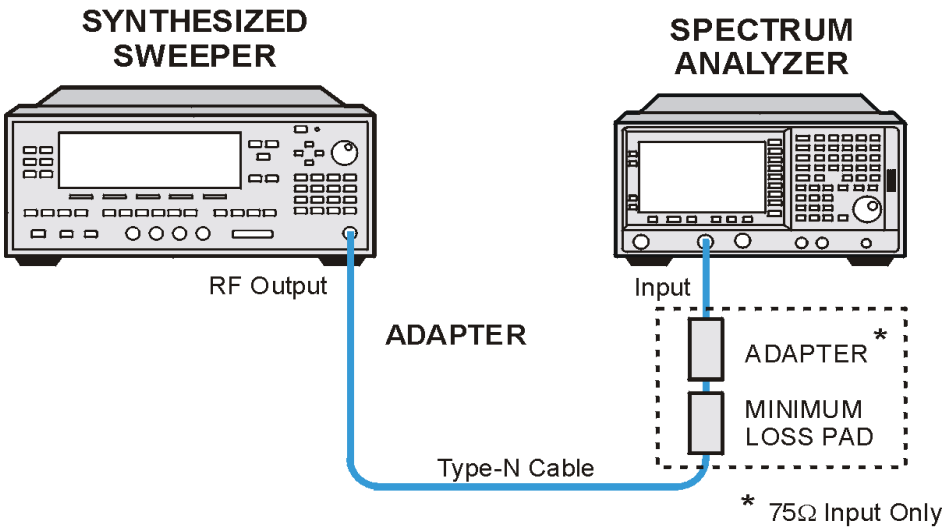

wl78b

20. Press **Preset** on the analyzer. Press the **Factory Preset** softkey, if it is displayed. Set the controls as follows:

    FREQUENCY, **Center Freq, 500 MHz**
    SPAN, 200 kHz
    AMPLITUDE, **Attenuation**, **10 dB** (Man)
    BW/Avg, Res BW, 1 kHz
    Peak Search (or **Search**), **Marker →**, **Mkr → Ref Lvl**
    Peak Search (or **Search**), **Marker**, **Delta**
    Single

21. On the synthesized sweeper, press **RECALL**, **1**.

22. On the analyzer, press **Single** and wait for the completion of a new sweep.

23. On the analyzer, press **Peak Search** (or **Search**), and record the marker delta (Δ `Mkr1`) amplitude in the performance verification test record as indicated in Table 2-67.

ManualsPlus.com

24. On the synthesized sweeper, press **RECALL**, **2**.
25. On the analyzer, press **Single** and wait for the completion of a new sweep.
26. On the analyzer, press **Peak Search** (or **Search**), record the marker delta (Δ `Mkr1`) amplitude in the performance verification test record as indicated in Table 2-67.
27. On the synthesized sweeper, press **RECALL, 4.**
28. On the analyzer press the following keys:

    FREQUENCY, **Center Freq**, **100 MHz**
    AMPLITUDE, **–5 dBm**(*50 Ω Input*)
    AMPLITUDE, 48.75 dBmV *(75 Ω Input)*
    Marker, Normal
    Sweep, Sweep (Cont)
    Peak Search (or **Search**), **Meas Tools, Mkr → Ref Lvl**
    Peak Search (or **Search**), **Meas Tools**, **Delta**
    Single

29. On the synthesized sweeper, press **RECALL 3** for a CW frequency of 1310.7 MHz.
30. Press **Single** on the analyzer and wait for a completion of a new sweep.
31. On the analyzer, press **Peak Search** (or **Search**) and record the marker delta (Δ `Mkr1`) amplitude in the performance test record as indicated in Table 2-67.

ManualsPlus.com

Table 2-67 Other Input-Related Spurious Responses Worksheet

Synthesized Sweeper CW Frequency			Test Record Entry Marker Delta (Δ `Mkr1`)
Save Register	**CW**	**Power Level**	
1	542.8 MHz[a]	–10 dBm	1)
2	510.7 MHz[b]	–10 dBm	2)
3	1310.7 MHz[b]	–10 dBm	3)
4	100 MHz	–10 dBm	N/A

a. Image response
b. Multiple response

ManualsPlus.com

29. Other Input-Related Spurious Responses: Agilent E4402B, E4403B, E4404B, E4405B, E4407B, and E4408B

This test measures the ability of the analyzer to reject image, multiple, and out-of-band responses. A synthesized source and the analyzer are set to the same frequency and the amplitude of the source is set to –10 dBm and –20 dBm. A marker amplitude reference is set on the analyzer for each source amplitude setting. The source is then tuned to several different frequencies which should generate image, multiple, and out-of-band responses. At each source frequency, the source amplitude is set to the appropriate amplitude and the amplitude of the response, if any, is measured using the analyzer marker functions.

There are no related adjustment procedures for this performance test.

Equipment Required

Synthesized sweeper
Power meter
RF power sensor, (*Agilent E4402B, E4403B*)
Microwave power sensor (*Agilent E4404B, E4405B, E4407B, E4408B*)
RF power splitter *(Agilent E4402B, E4403B)*
Microwave power splitter (*Agilent E4404B, E4405B, E4407B, E4408B*)
Adapter, Type-N (m) to Type-N (m)
Adapter, Type-N (m) to APC 3.5 (m)
Adapter, APC 3.5 (f) to APC 3.5 (f)
Cable, APC 3.5, 91 cm (36 in)

Procedure

Band 0

1. Zero and calibrate the power meter and power sensor in log mode (power reads out in dBm), as described in the power meter operation manual. Enter the power sensor 2 GHz calibration factor into the power meter.
2. Preset the synthesized sweeper and set the controls as follows:

   CW, **2000 MHz**
   POWER LEVEL, **–4 dBm**

3. Connect the equipment as shown in Figure 2-44. The analyzer provides the 10 MHz reference for the synthesized sweeper.

ManualsPlus.com

Figure 2-44 Other Input-Related Spurious Responses Test Setup

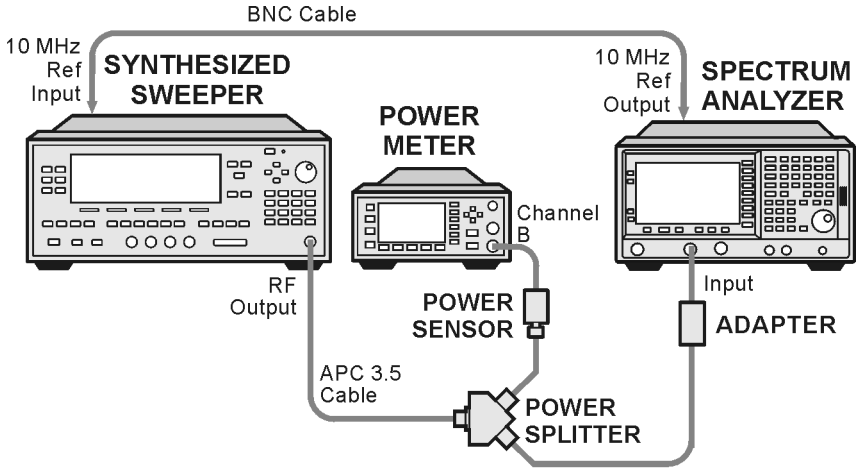

4. Press **Preset** on the analyzer. Press the **Factory Preset** softkey, if it is displayed. Set the controls as follows:

   FREQUENCY, Center Freq, 2 GHz
   SPAN, 200 kHz

   AMPLITUDE, Ref Level –10 dBm
   AMPLITUDE, Attenuation 0 dBm (Man)
   BW/Avg, Res BW, 1 kHz

5. Adjust the synthesized sweeper power level for a –10 dBm ±0.1 dB reading on the power meter.

6. On the analyzer, press **Single**, and wait for the sweep to finish. Then press following keys:

   Marker, **Select Marker** (1)
   Peak Search (or **Search**)
   Marker
   Delta

   The signal peak might be slightly above the reference level, but the marker function can still make an accurate measurement.

7. Adjust the synthesized sweeper power level for a –20 dBm ±0.1 dB reading on the power meter.

8. On the analyzer, press **Single**, and wait for the sweep to finish. Press following keys:

   Marker, **Select Marker** (2)
   Peak Search (or **Search**)
   Marker
   Delta

9. On the analyzer, press **AMPLITUDE**, **Ref Level**, **–30 dBm**.

ManualsPlus.com

10. Repeat step a through step h using the data in Table 2-68 for Band 0.

    a. Set the synthesized sweeper to the listed CW frequency.

    Do not set the synthesized sweeper to frequencies outside the frequency range of the analyzer.

    b. Enter the appropriate power sensor calibration factor into the power meter.

    c. Adjust the synthesized sweeper power level until the power meter reading is equal to the Mixer Level in Table 2-68, ±0.1 dB.

    d. On the analyzer, press **Single** and wait for the completion of a new sweep. Then, press **Peak Search** (or **Search**).

    e. If the Mixer Level in Table 2-68 is –20 dBm, press **Marker**, **Select Marker** (2).

    f. If the Mixer Level in Table 2-68 is –10 dBm, press **Marker**, **Select Marker** (1).

    g. On the analyzer, press **Peak Search** (or **Search**).

    h. Record the delta marker (Δ `Mkr`) amplitude reading in Table 2-68 and in the appropriate entry locations in the performance verification test record.

11. On the analyzer, press the following keys:

    Marker, More, Marker All Off
    Auto Couple
    SPAN, 1 MHz
    AMPLITUDE, Ref Level, –10 dBm
    AMPLITUDE, **Attenuation, 0 dB**
    Sweep, Sweep (Cont)

NOTE End of procedure for Agilent E4402B and E4403B.

Band 1

12. On the analyzer, press the following keys:

    FREQUENCY, **Center Freq, 4 GHz**

13. On the synthesized sweeper, press **CW**, **4 GHz**.

14. Enter the power sensor 4 GHz calibration factor into the power meter.

15. On the analyzer, press the following keys:

    Marker, **More**, **Marker All Off**
    Amplitude, **Presel Center**

16. Repeat step 5 through step 11 for the synthesized sweeper CW

ManualsPlus.com

frequencies listed in Table 2-68 for Band 1.

NOTE End of procedure for Agilent E4404B.

Band 2

17. On the analyzer, press the following keys:

    FREQUENCY, **Center Freq, 9 GHz**

18. On the synthesized sweeper, press **CW**, **9 GHz**.

19. Enter the power sensor 9 GHz calibration factor into the power meter.

20. On the analyzer press the following keys:

    AMPLITUDE, **Presel Center**
    Marker, **More**, **Marker All Off**

21. Repeat step 5 through step 11 for the synthesized sweeper CW frequencies listed in Table 2-68 for Band 2.

NOTE End of procedure for Agilent E4405B.

Band 3

22. On the analyzer, press the following keys:

    FREQUENCY, **Center Freq, 15 GHz**

23. On the synthesized sweeper, press: **CW**, **15 GHz**.

24. Enter the power sensor 15 GHz calibration factor into the power meter.

25. On the analyzer press the following keys:

    AMPLITUDE, **Presel Center**
    Marker, **More**, **Marker All Off**

26. Repeat step 5 through step 11 for the synthesized sweeper CW frequencies listed in Table 2-68 for Band 3 for the 15 GHz analyzer center frequency.

Band 4

27. On the analyzer, press:

    FREQUENCY, **Center Freq, 21 GHz**

28. On the synthesized sweeper, press: **CW**, **21 GHz**.

29. Enter the power sensor 21 GHz calibration factor into the power meter.

ManualsPlus.com

30. On the analyzer, press **AMPLITUDE**, **Presel Center**.

31. On the analyzer, press the following:

    Marker, **More**, **Marker All Off**

32. Repeat step 5 through step 11 for the synthesized sweeper CW frequencies listed in Table 2-68 for Band 4 for the 21 GHz analyzer center frequency.

Table 2-68 Other Input-Related Spurious Responses

Band	Analyzer Center Frequency (GHz)	Synthesized Sweeper CW Frequency (MHz)	Mixer Level (dBm)	Test Record Entry Δ Mkr1 or Δ Mkr2 Amplitude
0	2.0	2042.8[a]	–20	1)
	2.0	2642.8[a]	–20	2)
	2.0	1820.8[b]	–20	3)
	2.0	278.5[b]	–20	4)
Note: The following data applies only to the Agilent E4404B, E4405B, E4407B and E4408B				
0	2.0	5600.0[c]	–10	5)
	2.0	6242.8[c]	–10	6)
1	4.0	4042.8[a]	–20	7)
	4.0	4642.8[a]	–20	8)
	4.0	3742.9[b]	–20	9)
	4.0	2242.8[c]	–10	10)
Note: The following data applies only to the Agilent E4405B, E4407B and E4408B				
2	9.0	9042.8[a]	–20	11)
	9.0	9642.8[a]	–20	12)
	9.0	4982.1[b]	–20	13)
	9.0	9342.8[c]	–10	14)
Note: The following data applies only to the Agilent E4407B and E4408B				
3	15.0	15042.8[a]	–20	15)

ManualsPlus.com

Table 2-68 Other Input-Related Spurious Responses

Band	Analyzer Center Frequency (GHz)	Synthesized Sweeper CW Frequency (MHz)	Mixer Level (dBm)	Test Record Entry Δ Mkr1 or Δ Mkr2 Amplitude
	15.0	15642.8[a]	–20	16)
	15.0	18830.35[b]	–20	17)
	15.0	4151.75[c]	–10	18)
4	21.0	21042.8[a]	–20	19)
	21.0	21642.8[a]	–20	20)
	21.0	21342.8[b]	–20	21)
	21.0	5008.95[c]	–10	22)

a. Image response
b. Multiple response
c. Out-of-band response

ManualsPlus.com

30. Spurious Responses: Agilent E4401B and E4411B

This test is performed in two parts. Part 1 measures third order intermodulation distortion. Part 2 measures second harmonic distortion.

To test second harmonic distortion, a low pass filter is used to filter the source output, ensuring that harmonics read by the analyzer are internally generated and not coming from the source. To measure the distortion products, the power at the mixer is set 25 dB higher than specified.

For example, if the specification states that with –40 dBm at the input mixer, the distortion products should be suppressed by >75 dBc, the equivalent second harmonic intercept (SHI) is >35 dBm(–40 dBm + 75 dBc). Measuring with –15 dBm at the mixer and verifying the distortion products suppressed by >50 dBc also ensures the SHI is >35 dBm (–15 dBm + 50 dBc).

For third order intermodulation distortion, two signals are combined in a directional bridge to provide isolation. These two signals are applied to the analyzer input. The power level of the two signals is several dB higher than specified, so the distortion products should be suppressed by less than the amount specified. In this manner, the equivalent third order intercept (TOI) is measured.

For example, if the specification states that with two –30 dBm signals at the input mixer, the distortion products should be suppressed by >80 dBc, which yields a third order intercept of >10 dBm (–30 dBm + (80 dBc/2)). Measuring with –20 dBm at the mixer and verifying the distortion products are suppressed by >60 dBc, the equivalent TOI is also >10 dBm (–20 dBm + (60 dBc/2)).

There are no related adjustment procedures for this performance test.

Equipment Required

Synthesized signal generator
Synthesized sweeper
Power meter, dual channel
RF power sensor
Power splitter
Directional bridge
50 MHz low pass filter
Cable, BNC, 120-cm
Cable, APC 3.5, 91-cm (2 required)
Adapter, Type-N (m) to APC 3.5 (f) *(3 required)*
Adapter, Type-N (m) to SMA (m)

ManualsPlus.com

Adapter, Type-N (m) to BNC (f)
Adapter, Type-N (m) to Type-N (m)
Adapter, SMA (f) to BNC (m)
Adapter, APC 3.5 (f) to APC 3.5 (f)

Additional Equipment for 75 Ω Input

Power sensor, 75 Ω
Adapter, mechanical, Type-N (m) 50 Ω, to Type-N (m), 75 Ω
Adapter, Type-N (m), to BNC (m), 75 Ω

Procedure

This performance test consists of two parts:

Part 1: Third Order Intermodulation Distortion

Part 2: Second Harmonic Distortion

Perform Part 1 before Part 2.

Part 1: Third Order Intermodulation Distortion

1. Zero and calibrate the power meter and RF power sensor in log mode (power reads out in dBm), as described in the power meter operation manual.

   75 Ω *Input only: Use a* 75 Ω *power sensor*.

CAUTION Use only 75 Ω cables, connectors, or adapters on instruments with 75 Ω connectors, or damage to the connectors will occur.

2. Connect the equipment as shown in Figure 2-45 with the output of the directional bridge connected to the power sensor.

   75 Ω *Input only: Use the 75* Ω *power sensor with the 50* Ω *to 75* Ω *mechanical adapter.*

ManualsPlus.com

Figure 2-45 Third Order Intermodulation Distortion Test Setup

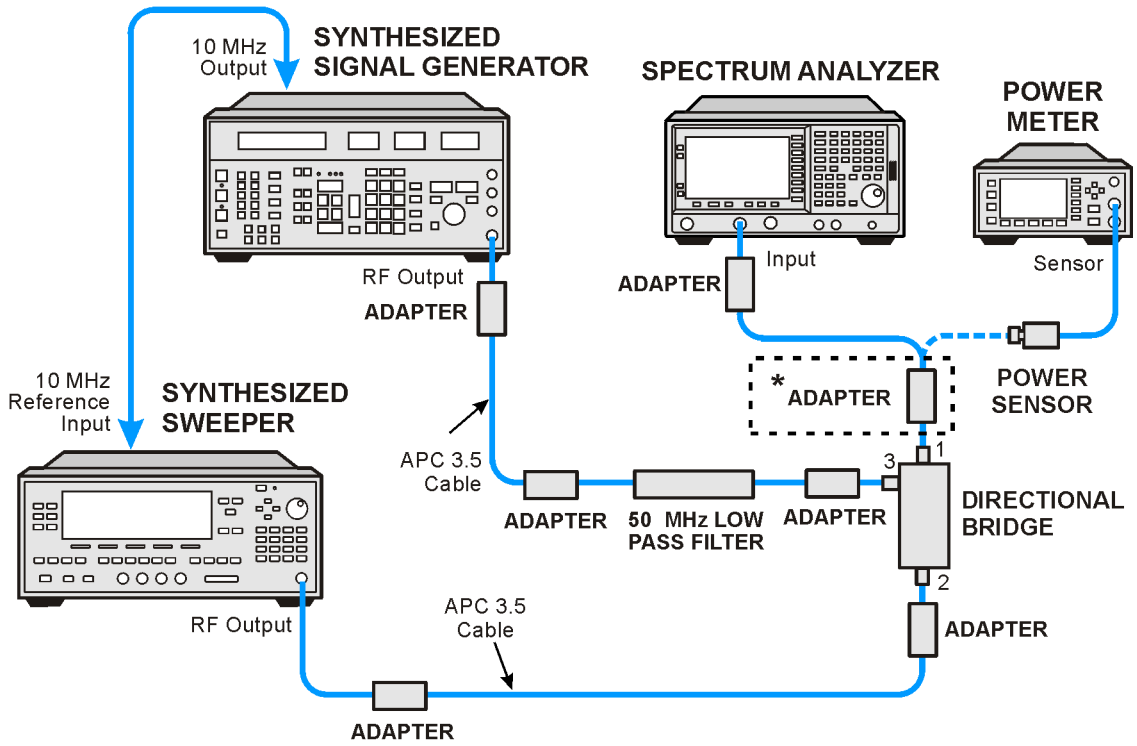

3. Perform step 4 through step 29 using the information and entries from Table 2-69. Then continue with step 30 through step 38.

Table 2-69 Test Equipment Settings for Testing TOI

TOI Test	F1 (MHz)	F2 (MHz)	Low Pass Filter (MHz)
1	50.0	50.05	50
Option 1DR	50.0	50.05	50

4. Press **Blue Key, Special, 0, 0** on the signal generator. Set the frequency to the F1 value for TOI Test 1 in Table 2-69. Set the amplitude to 4 dBm.

5. Press **PRESET** on the synthesized sweeper. Set the CW frequency of the synthesized sweeper to the F2 value for TOI Test 1 in Table 2-69. Then press the following:

   POWER LEVEL, –10 dBm
   RF Off

6. Enter the power sensor calibration factor for the signal generator

ManualsPlus.com

frequency into the power meter.

7. Adjust the amplitude of the signal generator until the power meter reads –12 dBm ±0.1 dB.

   75 Ω Input only: *The power measured at the output of the 50 Ω directional bridge by the 75 Ω power sensor is the equivalent power "seen" by the 75 Ω analyzer.*

8. Disconnect the power sensor from the directional bridge. Connect the directional bridge directly to the analyzer input using an adapter (do not use a cable).

   75 Ω Input only: Use a 50 Ω to 75 Ω mechanical adapter and a 75 Ω Type-N(m) to BNC(m) adapter.

CAUTION Support the directional bridge and low pass filter to minimize stress on the analyzer input connector.

9. Press **Preset** on the analyzer. Press the **Factory Preset** softkey, if it is displayed. Press **System, Alignments, Auto Align, Off.** Set the analyzer center frequency to the F1 value for TOI Test 1 in Table 2-69. Then, set the analyzer by pressing the following keys:

   FREQUENCY, CF Step, **50 kHz** (Man)
   SPAN, **20 kHz**
   AMPLITUDE, **More**, **Y Axis Units** (or **Amptd Units**), **dBm**
   AMPLITUDE, Ref Level, **–5 dBm** (50 Ω *Input only*)
   AMPLITUDE, Ref Level, **–10 dBm** (*75 Ω Input only*)
   AMPLITUDE, Attenuation, 5 dB (Man) (50 Ω *Input only*)
   AMPLITUDE, Attenuation, 0 dB (Man) (*75 Ω Input only*)
   BW/Avg, 1 kHz (Man)
   BW/Avg, Video BW, 300 Hz (Man)
   Peak Search (or **Search**), **More**, **Search Param**, **Peak Excursn**, **3 dB**

10. On the analyzer, press the following keys:

    Peak Search (or **Search**)
    Meas Tools
    Mkr → CF, **Delta**

11. On the analyzer, press **FREQUENCY**, ↑.

12. If the resolution bandwidth is ≥1kHz, press **SPAN**, **4 kHz**.

13. On the synthesized sweeper, set the RF On.

14. On the analyzer, press **Peak Search** (or **Search**).

15. On the synthesized sweeper, adjust the power level until the marker delta (Δ `Mkr1`) amplitude reads 0 dB ±0.05 dB.

16. On the analyzer, press: **FREQUENCY**, ↓, ↓. The center frequency should now be lower than the signal generator frequency by the CF Step value.

ManualsPlus.com

17. Set the analyzer reference level to –15 dBm.

    75 Ω *Input only: Set the reference level to –20 dBm.*

18. On the analyzer, press **BW/Avg**, **Average**, **20**, and wait for "`Vavg 20`" to appear along the left side of the display.

19. On the analyzer, press **Peak Search** (or **Search**) and record the marker amplitude reading in Table 2-70 as the Lower Distortion Amplitude.

20. On the analyzer, press **BW/Avg**, **Average Off**.

21. On the analyzer, increment the center frequency by three times the CF Step value. Press **FREQUENCY**, **Center Freq**, ↑, ↑, ↑. The center frequency should now be one CF Step value above the synthesized sweeper frequency.

22. Set the synthesized signal generator frequency to F2 as indicated in Table 2-69.

23. Set the synthesized sweeper CW frequency to F1 as indicated in Table 2-69.

24. On the analyzer, press **BW/Avg**, **Average**, **20**, and wait for `Vavg 20` to appear along the left side of the display.

25. On the analyzer, press **Peak Search** (or **Search**) and record the marker amplitude reading in Table 2-70 as the Upper Distortion Amplitude.

26. On the analyzer, press **BW/Avg**, **Average Off**.

27. Of the Lower Distortion Amplitude and Upper Distortion Amplitudes recorded in Table 2-70, enter the most positive value as the Worst Distortion Amplitude in Table 2-70. For example, if the Upper Distortion Amplitude is –62 dBc and the Lower Distortion Amplitude is –63 dBc, enter –62 dBc as the Worst Distortion Amplitude.

28. If the analyzer has a 50 Ω input, enter –17 dBm as the Mixer Level in Table 2-70 (–12 dBm input power – 5 dB input attenuation). If the analyzer has a 75 Ω input, enter 36.75 dBmV as the Mixer Level in Table 2-70 (–12 dBm = 36.75 dBmV).

29. Calculate the equivalent TOI by subtracting one half of the Worst Distortion Amplitude (in dB) from the Mixer Level (in dBm or dBmV). Enter the result in Table 2-70 as the Calculated TOI. For example, if the Worst Distortion Amplitude is –62 dBc and the Mixer Level is –17 dBm, the Calculated TOI would be:

ManualsPlus.com

$$\text{TOI} = -17\ \text{dBm} - \left(-\frac{62\ \text{dB}}{2}\right) = -17\ \text{dBm} + 31\ \text{dB} = +14\ \text{dBm}$$

Table 2-70 Third Order Intermodulation Distortion Worksheet

TOI Test	Lower Distortion Amplitude	Upper Distortion Amplitude	Worst Distortion Amplitude	Mixer Level	Test Record Entry Calculated TOI
1					1)
Option 1DR					2)

30. If the analyzer is an E4401B and is equipped with Option 1DR, Narrow Resolution Bandwidth, perform step 31 through step 36. Otherwise, continue with step 37.

31. Set synthesized signal generator frequency to the F1 value used in TOI Test 1 of Table 2-69.

32. Set synthesized sweeper CW frequency to the F2 value used in TOI Test 1 of Table 2-69.

33. Press **Preset** on the analyzer. Press the **Factory Preset** softkey, if it is displayed. Press **System, Alignments, Auto Align, Off.** Set the analyzer to the F1 value for TOI Test Option 1DR in Table 2-69. Then set the analyzer by pressing the following keys:

    FREQUENCY, **CF Step**, **50 kHz** (Man)
    SPAN, **20 kHz**
    AMPLITUDE, **More**, **Y Axis Units** (or **Amptd Units**), **dBm**
    AMPLITUDE, Ref Level, **–5 dBm** (50 Ω *Input only*)
    AMPLITUDE, Ref Level, **–10 dBm** (*75 Ω Input only*)
    AMPLITUDE, Attenuation, 5 dB (Man) (50 Ω *Input only*)
    AMPLITUDE, Attenuation, 0 dB (Man) (*75 Ω Input only*)
    BW/Avg, 1 kHz (Man)
    BW/Avg, Video BW, 300 Hz (Man)
    Peak Search (or **Search**), **More**
    Search Param (or Search Criteria), **Peak Excursn**, **3 dB**

34. On the analyzer, press the following keys:

    Peak Search (or **Search**)
    Marker →
    Mkr → **CF**

35. Set the analyzer as follows:

    SPAN, 500 Hz
    BW/Avg, Res BW, 30 Hz
    BW/Avg, Video BW, 10 Hz

ManualsPlus.com

36. Repeat step 10 through step 29. This is the TOI test for Option 1DR.

37. On the analyzer, press **System, Alignments, Auto Align, On.**

38. Part 1: Third Order Intermodulation Distortion is complete. Continue with Part 2: Second Harmonic Distortion.

Part 2: Second Harmonic Distortion

1. Set the synthesized signal generator controls as follows:

   FREQUENCY, **40 MHz**
   AMPLITUDE, **–10 dBm** (50 Ω *Input only*)
   AMPLITUDE, **–4.3 dBm** (75 Ω *Input only*)

2. Connect the equipment as shown in Figure 2-46.

Figure 2-46 Second Harmonic Distortion Test Setup

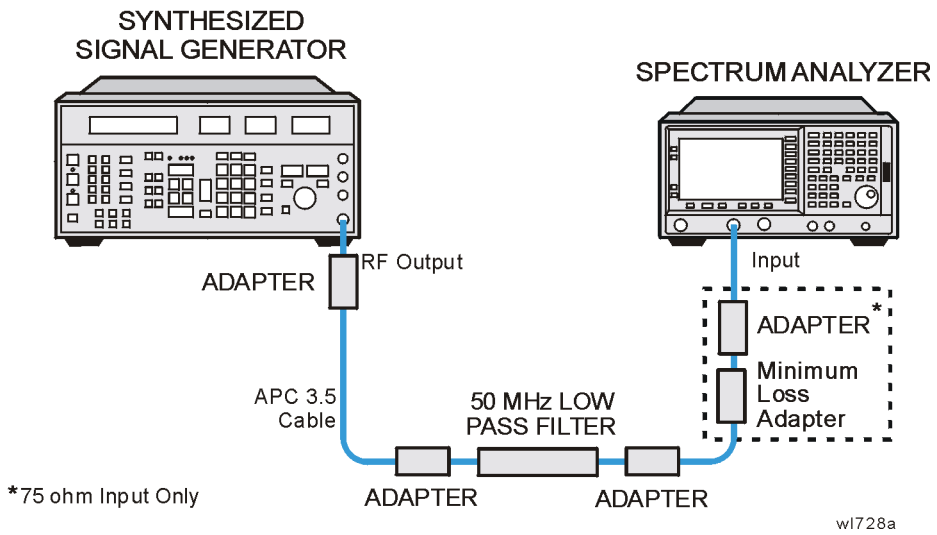

75 Ω Input only: Connect the minimum loss adapter between the LPF and INPUT 75 Ω.

3. Press **Preset** on the analyzer. Press the **Factory Preset** softkey, if it is displayed. Set the controls as follows:

   FREQUENCY, **Center Freq**, **40 MHz**
   SPAN, **1 MHz**
   AMPLITUDE, **–10 dBm** (50 Ω *Input only*)
   AMPLITUDE, **44 dBmV** (75 Ω *Input only*)
   Attenuation Auto Man 10 dB
   BW/Avg, **30 kHz**

4. Adjust the synthesized signal generator amplitude to place the peak of the signal at the reference level.

ManualsPlus.com

5. Set the analyzer control as follows:

   SPAN, 50 kHz
   BW/Avg, **1 kHz**
   Video BW Auto Man, **100 Hz**

6. Wait for two sweeps to finish, then press the following analyzer keys:

   Peak Search (or **Search**)
   Mkr →, **Mkr → CF Step**
   Marker, **Delta**
   FREQUENCY, Center Freq, ↑

7. Press **Peak Search** (or **Search**). The marker delta (Δ `Mkr1`) amplitude reading is the second harmonic suppression.

8. If the analyzer has a 50 Ω input, calculate the second harmonic intercept (SHI) using the second harmonic suppression value read in step 7 as follows:

   $$\text{SHI} = -20\ \text{dBm} - \text{Second Harmonic Suppression}$$

   For example, if the second harmonic suppression is –62 dB, the SHI would be 42 dBm:

   $$42\ \text{dBm} = -20\ \text{dBm} - (-62\ \text{dB})$$

9. If the analyzer has a 75 Ω input, calculate the second harmonic intercept (SHI) using the second harmonic suppression value read in step 7 as follows:

   $$\text{SHI} = 34\ \text{dBmV} - \text{Second Harmonic Suppression}$$

   For example, if the second harmonic suppression is –65 dB, the SHI would be 99 dBmV:

   $$99\ \text{dBmV} = 34\ \text{dBmV} - (-65\ \text{dB})$$

10. Record the SHI result as Entry 3 in the performance verification test record.

ManualsPlus.com

31. Spurious Responses: Agilent E4402B and E4403B

This test is performed in two parts. Part 1 measures third order intermodulation distortion; Part 2 measures second harmonic distortion.

To test second harmonic distortion, a low pass filter is used to filter the source output, ensuring that harmonics read by the analyzer are internally generated and not coming from the source. To measure the distortion products, the power at the mixer is set 25 dB higher than specified.

For example, if the specification states that with –30 dBm at the input mixer, the distortion products should be suppressed by >75 dBc, the equivalent second harmonic intercept (SHI) is >45 dBm (–30 dBm + 75 dBc). Measuring with –15 dBm at the mixer and verifying the distortion products suppressed by >60 dBc also ensures the SHI is >45 dBm (–15 dBm + 60 dBc).

For third order intermodulation distortion, two signals are combined in a directional bridge to provide isolation. These two signals are applied to the analyzer input. The power level of the two signals is several dB higher than specified, so the distortion products should be suppressed by less than the amount specified. In this manner, the equivalent third order intercept (TOI) is measured.

For example, if the specification states that with two –30 dBm signals at the input mixer, the distortion products should be suppressed by >82 dBc, which yields a third order intercept of >11 dBm (–30 dBm + (82 dBc/2)). Measuring with –20 dBm at the mixer and verifying the distortion products are suppressed by >62 dBc, the equivalent TOI is also >11 dBm (–20 dBm + (62 dBc/2)).

There are no related adjustment procedures for this performance test.

Equipment Required

Synthesized signal generator
Synthesized sweeper
Power meter, dual channel
RF power sensor
Power splitter
Directional bridge
300 MHz low pass filter
Cable, APC 3.5, 91-cm (2 required)
Cable, BNC, 120-cm
Adapter, Type-N (m) to APC 3.5 (f) *(3 required)*
Adapter, Type-N (m) to SMA (m)

ManualsPlus.com

Adapter, Type-N (m) to BNC (f)
Adapter, Type-N (m) to Type-N (m)
Adapter, SMA (f) to BNC (m)
Adapter, APC 3.5 (f) to APC 3.5 (f)

Procedure

This performance test consists of two parts:

Part 1: Third Order Intermodulation Distortion

Part 2: Second Harmonic Distortion

Perform Part 1 before Part 2.

Part 1: Third Order Intermodulation Distortion

1. Zero and calibrate the power meter and RF power sensor in log mode (power reads out in dBm), as described in the power meter operation manual.
2. Connect the equipment as shown in Figure 2-47 with the output of the directional bridge connected to the power sensor.

Figure 2-47 Third Order Intermodulation Distortion Test Setup

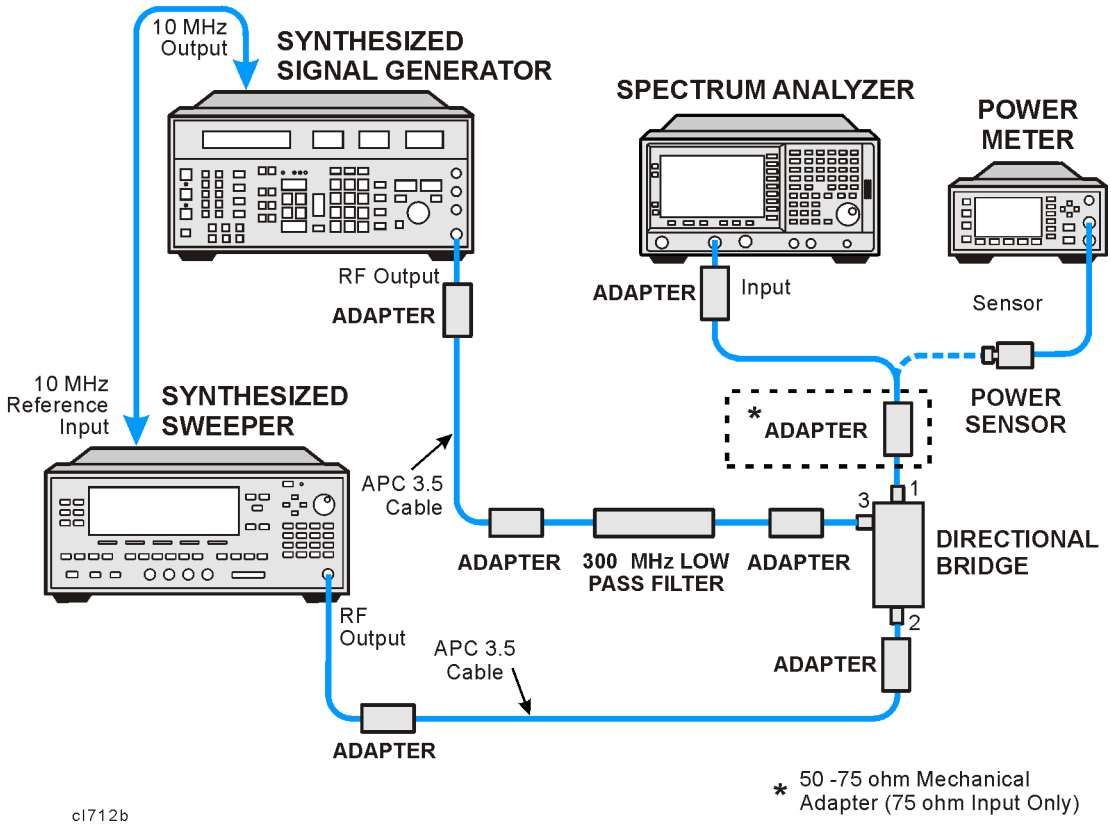

ManualsPlus.com

3. Perform step 4 through step 29 using the information and entries from Table 2-71. Then continue with step 30 through step 38.

Table 2-71 Test Equipment Settings for TOI

TOI Test	F1 (MHz)	F2 (MHz)	Low Pass Filter (MHz)
1	300.0	300.05	300
Option 1DR	300.0	300.05	300

4. Press **Blue Key, Special, 0, 0** on the signal generator. Set the frequency to F1 in Table 2-71 for TOI Test 1. Set the amplitude to 4 dBm.
5. Press **PRESET** on the synthesized sweeper, and set the frequency to F2 in Table 2-71 for TOI Test 1. Set the synthesized sweeper controls as follows:

   POWER LEVEL, **–10 dBm**
   RF Off

6. Enter the power sensor calibration factor for the signal generator frequency into the power meter.
7. Adjust the amplitude of the signal generator until the power meter reads –12 dBm ±0.1 dB.
8. Disconnect the power sensor from the directional bridge. Connect the directional bridge directly to the analyzer input using an adapter (do not use a cable).

CAUTION Support the directional bridge and low pass filter to minimize stress on the analyzer input connector.

9. Press **Preset** on the analyzer. Press the **Factory Preset** softkey, if it is displayed. Press **System, Alignments, Auto Align, Off.** Set the analyzer center frequency to the F1 value for TOI Test 1 in Table 2-71. Then, set the analyzer by pressing the following keys:

   FREQUENCY, **CF Step**, **50 kHz** (Man)
   SPAN, **20 kHz**
   AMPLITUDE, **More**, **Y Axis Units** (or **Amptd Units**), **dBm**
   AMPLITUDE, Ref Level, **–5 dBm**
   AMPLITUDE, Attenuation, 5 dB (Man)
   BW/Avg, 1 kHz (Man)
   BW/Avg, Video BW, 300 Hz (Man)
   Peak Search (or **Search**), **More**
   Search Param (or Search Criteria), **Peak Excursn, 3 dB**

10. On the analyzer, press the following keys:

    Peak Search (or **Search**)

ManualsPlus.com

Marker →
Mkr → CF
Delta

11. On the analyzer, press: **FREQUENCY**, ↑.
12. If the resolution bandwidth is ≥1 kHz, press: **SPAN**, **4 kHz**.
13. On the synthesized sweeper, set the RF on.
14. On the analyzer, press **Peak Search** (or **Search**).
15. On the synthesized sweeper, adjust the power level until the marker delta (Δ `Mkr1`) amplitude reads 0 dB ±0.05 dB.
16. On the analyzer, press **FREQUENCY**, ↓, ↓. The center frequency should now be lower than the signal generator frequency by the CF Step value.
17. Set the analyzer reference level to –15 dBm.
18. On the analyzer, press: **BW/Avg**, **Average**, **20**, and wait for `"Vavg 20"` to appear along the left side of the display.
19. On the analyzer, press **Peak Search** (or **Search**) and record the marker amplitude reading in Table 2-72 as the Lower Distortion Amplitude.
20. On the analyzer, press: **BW/Avg**, **Average Off**.
21. On the analyzer, press **FREQUENCY, Center Freq**, ↑, ↑, ↑. The center frequency should now be one CF Step value above the synthesized sweeper frequency.
22. Set the synthesized signal generator frequency to F2 as indicated in Table 2-71.
23. Set the synthesized sweep CW frequency to F1 as indicated in Table 2-71.
24. On the analyzer, press **BW/Avg**, **Average**, **20**, and wait for `"Vavg 20"` to appear along the left side of the display.
25. On the analyzer, press **Peak Search** (or **Search**) and record the marker amplitude reading in Table 2-72 as the Upper Distortion Amplitude.
26. On the analyzer, press **BW/Avg**, **Average Off**.
27. Of the Lower Distortion Amplitude and Upper Distortion Amplitudes recorded in Table 2-72, enter the most positive value as the Worst Distortion Amplitude in Table 2-72. For example, if the Upper Distortion Amplitude is –62 dBc and the Lower Distortion Amplitude is –63 dBc, enter –62 dBc as the Worst Distortion Amplitude.
28. Enter –17 dBm as the Mixer Level in Table 2-72 (–12 dBm input power –5 dB input attenuation).
29. Calculate the equivalent TOI by subtracting one half of the Worst

ManualsPlus.com

Distortion Amplitude (in dB) from the Mixer Level (in dBm). Enter the result in Table 2-72 as the Calculated TOI. For example, if the Worst Distortion Amplitude is –62 dBc and the Mixer Level is –17 dBm, the Calculated TOI would be:

$$\text{TOI} = -17\ \text{dBm} - \left(-\frac{62\ \text{dB}}{2}\right) = -17\ \text{dBm} + 31\ \text{dB} = +14\ \text{dBm}$$

Table 2-72 Third Order Intermodulation Distortion Worksheet

TOI Test	Lower Distortion Amplitude	Upper Distortion Amplitude	Worst Distortion Amplitude	Mixer Level	Test Record Entry Calculated TOI
1					1)
Option 1DR					2)

30. If the analyzer is an E4402B and is equipped with Option 1DR, Narrow Resolution Bandwidth, perform step 31 through step 36. Otherwise, continue with step 37.

31. Set synthesized signal generator frequency to F1 as indicated in Table 2-71 for TOI Test 1.

32. Set synthesized sweeper CW frequency to F2 as indicated in Table 2-71 for TOI Test 1.

33. Press **Preset** on the analyzer. Press the **Factory Preset** softkey, if it is displayed. Press **System, Alignments, Auto Align, Off.** Set the analyzer center frequency to the F1 value for TOI Test Option 1DR in Table 2-71. Then, set the analyzer by pressing the following keys:

    FREQUENCY, CF Step, 50 kHz (Man)
    SPAN, 20 kHz
    AMPLITUDE, More, Y Axis Units (or **Amptd Units**), **dBm**
    AMPLITUDE, Ref Level, –5 dBm
    AMPLITUDE, Attenuation, 5 dB (Man)
    BW/Avg, 1 kHz (Man)
    BW/Avg, Video BW, 300 Hz (Man)
    Peak Search (or **Search**), **More**,
    Search Param (or Search Criteria), Peak Excursn, 3 dB

34. On the analyzer, press the following keys:

    Peak Search (or **Search**)
    Marker →
    Mkr → CF

35. Set the analyzer as follows:

    SPAN, 500 Hz
    BW/Avg, Res BW, 30 Hz
    Video BW, 10 Hz

ManualsPlus.com

36. Repeat step 10 through step 29. This is the TOI test for Option 1DR.

37. On the analyzer, press **System, Alignments, Auto Align, On.**

38. Part 1: Third Order Intermodulation Distortion is complete. Continue with Part 2: Second Harmonic Distortion.

Part 2: Second Harmonic Distortion

1. Zero and calibrate the power meter and RF power sensor. Enter the power sensor 300 MHz calibration factor into the power meter.

Measuring the 300 MHz Frequency Response Error

2. Press **Preset** on the analyzer. Press the **Factory Preset** softkey, if it is displayed. Set the controls as follows:

   FREQUENCY, 300 MHz
   SPAN, 10 MHz

3. Connect the equipment as shown in Figure 2-48, with the output of the synthesized sweeper connected to the power splitter input and the power splitter outputs connected to the analyzer and power sensor.

Figure 2-48 Second Harmonic Distortion Test Setup

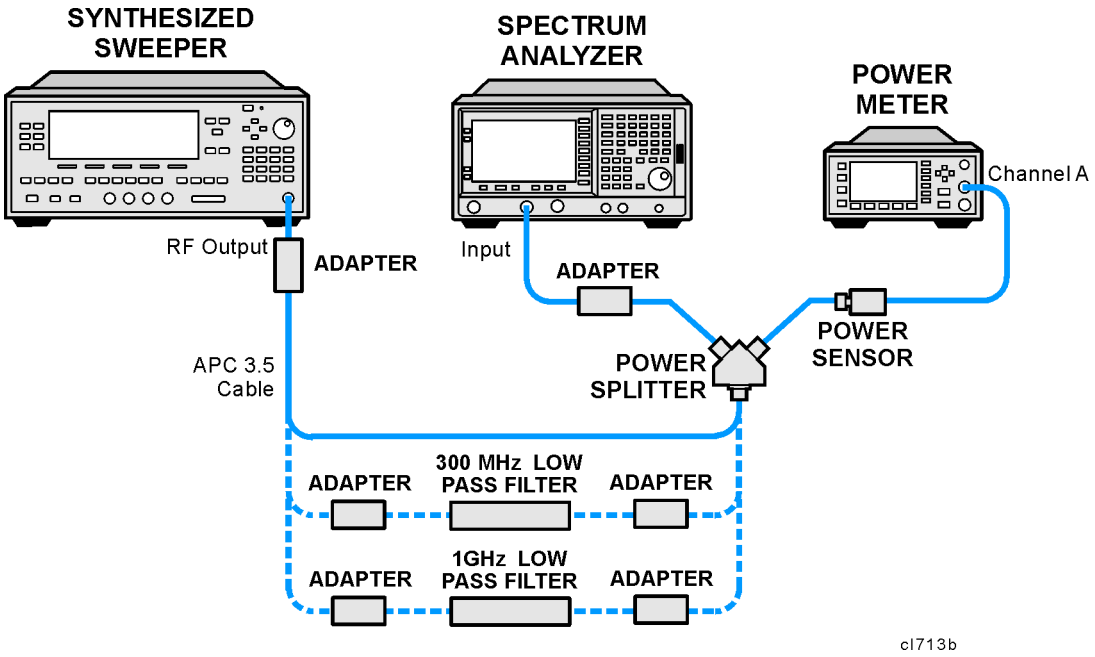

4. Preset the synthesized sweeper and set the controls as follows:

   CW, 300 MHz
   POWER LEVEL, 0 dBm

5. On the analyzer, press **Peak Search** (or **Search**), **Marker, Delta**.

ManualsPlus.com

6. Record the power meter reading at 300 MHz in Table 2-73.
7. Set the synthesized sweeper CW to 600 MHz.
8. On the analyzer, press **FREQUENCY**, **600 MHz**, then **Peak Search** (or **Search**).
9. Adjust the synthesized sweeper power level until the marker delta (Δ `Mkr1`) amplitude reads 0 dB ±0.10 dB.
10. Enter the power sensor 600 MHz calibration factor into the power meter.
11. Record the power meter reading at 600 MHz in Table 2-73.
12. Subtract the power meter reading at 600 MHz from the power meter reading at 300 MHz. Record this difference as the 300 MHz Frequency Response Error in Table 2-73. For example, if the power meter reading at 600 MHz is –6.45 dBm and the power meter reading at 300 MHz is –7.05 dBm, the 300 MHz Frequency Response Error would be –0.60 dB:

$$-0.60 \text{ dB} = -7.05 \text{ dBm} - (-6.45 \text{ dBm})$$

Table 2-73 Second Harmonic Distortion Worksheet

Description	Measurement
Power Meter Reading at 300 MHz	_____ dBm
Power Meter Reading at 600 MHz	_____ dBm
300 MHz Frequency Response Error (FRE)	_____ dB
Power Meter Reading at 900 MHz	_____ dBm
Power Meter Reading at 1800 MHz	_____ dBm
900 MHz Frequency Response Error (FRE)	_____ dB

Measuring 900 MHz Frequency Response Error

13. On the synthesized sweeper, press the following:

    CW, 900 MHz
    POWER LEVEL, **0 dBm**

14. On the analyzer, press **FREQUENCY**, **Center Freq**, **900 MHz**.
15. Enter the power sensor 1 GHz calibration factor into the power meter.
16. On the analyzer, press

    Marker, Off
    Peak Search (or **Search**).
    Marker, Delta

ManualsPlus.com

17. Record the power meter reading in Table 2-73 as the 900 MHz power meter reading.

18. On the synthesized sweeper, press **CW**, **1.8 GHz**.

19. On the analyzer, press the following:

    FREQUENCY, **Center Freq**, **1.8 GHz**
    Peak Search (or **Search**)
    AMPLITUDE

20. On the analyzer, press **Peak Search** (or **Search**).

21. Adjust the synthesized sweeper power level until the marker delta (Δ `Mkr1`) amplitude reads 0 dB ±0.1 dB.

22. Enter the power sensor 2 GHz calibration factor into the power meter.

23. Record the power meter reading in Table 2-73 as the 1.8 GHz power meter reading.

24. On the analyzer, press **Marker, Off**.

25. Subtract the power meter reading at 1.8 GHz from the power meter reading at 900 MHz. Record this difference as the 900 MHz Frequency Response Error in Table 2-73. For example, if the power meter reading at 1.8 GHz is –6.35 dBm and the power meter reading at 900 MHz is –7.05 dBm, the 900 MHz Frequency Response Error would be –0.7 dB:

$$-0.70 \text{ dB} = -7.05 \text{ dBm} - (-6.35 \text{ dBm})$$

Measuring the 300 MHz Second Harmonic Distortion

1. Connect the equipment as shown in Figure 2-48 using the 300 MHz Low Pass Filter.

2. On the synthesized sweeper, press:

   CW, **300 MHz**
   POWER LEVEL, **–10 dBm**

3. Enter the power sensor 300 MHz calibration factor into the power meter.

4. On the analyzer, press the following:

   FREQUENCY, **Center Freq**, **300 MHz**
   SPAN, **100 kHz**
   AMPLITUDE, **Ref Level**, **–10 dBm**
   AMPLITUDE, **Attenuation**, **10 dB** (Man)
   BW/Avg, **Res BW 1 kHz** (Man)
   Video BW, **1 kHz** (Man)
   Markers, **Off**

ManualsPlus.com

5. Adjust the synthesized sweeper power level until the power meter reading is –10 dBm ±0.2 dB.
6. On the analyzer, press the following:

   Peak Search (or **Search**), Marker, Delta
   FREQUENCY, **600 MHz**
   BW/Avg, 10

   Wait for the "`Vavg 10`" to appear along the left side of the display.
7. On the analyzer, press **Peak Search** (or **Search**). The marker delta (Δ `Mkr1`) amplitude is the second harmonic suppression.
8. On the synthesized sweeper, press **Marker**, **Off**.
9. Calculate the 300 MHz Second Harmonic Intercept (SHI) using the second harmonic suppression value read in step 7 and the 300 MHz Frequency Response Error (FRE) from Table 2-73 as follows:

   300 MHz SHI = – 20 dBm – Second Harmonic Suppression + 300 MHz FRE

   For example, if the second harmonic suppression is –59 dB, and the 300 MHz FRE is –0.60 dB, the SHI would be 38.4 dBm:

   $$38.4\ \text{dBm} = -20\ \text{dBm} - (-59\ \text{dB}) + (-0.60\ \text{dB})$$
10. Record the 300 MHz SHI as Entry 3 in the performance verification test record.

Measuring 900 MHz Second Harmonic Distortion

1. Replace the 300 MHz low pass filter with the 1 GHz low pass filter as shown in Figure 2-48.
2. On the synthesized sweeper, press the following:

   CW, **900 MHz**
   POWER LEVEL, **–10 dBm**
3. Enter the power sensor 1 GHz calibration factor into the power meter.
4. On the analyzer, press **FREQUENCY**, **Center Freq**, **900 MHz**.
5. On the analyzer, press **Peak Search** (or **Search**).
6. Adjust the synthesized sweeper power level until the power meter reading is –10 dBm ±0.1 dB.
7. On the analyzer, press the following:

   Peak Search (or **Search**)
   Marker, **Delta**
   FREQUENCY, **Center Freq**, **1.8 GHz**
8. On the analyzer, press the following:

ManualsPlus.com

AMPLITUDE, Ref Level, –20 dBm
BW/Avg, Video BW, 30 Hz (Man)

9. On the analyzer, press **BW/Avg, Average**, **10 Hz**. Wait until "VAvg 10" is displayed along the left side of the display.
10. On the analyzer, press **Peak Search** (or **Search**). The marker delta (Δ Mkr1) amplitude reading is the second harmonic suppression.
11. Calculate the 900 MHz Second Harmonic Intercept (SHI) using the second harmonic suppression value read in step 10 and the 300 MHz Frequency Response Error (FRE) from Table 2-73 as follows:

    900 MHz SHI = – 20 dBm – Second Harmonic Suppression + 900 GHz FRE

    For example, if the second harmonic suppression is –73 dB, and the 900 MHz FRE is 0.70 dB, the SHI would be 52.3 dBm:

    $$52.3\ \text{dBm} = -20\ \text{dBm} - (-73\ \text{dB}) + (-0.70\ \text{dB})$$

12. Record the 900 MHz SHI as Entry 4 in the performance verification test record.

ManualsPlus.com

32. Spurious Responses: Agilent E4404B, E4405B, E4407B, and E4408B

This test is performed in two parts. Part 1 measures third order intermodulation distortion. Part 2 measures second harmonic distortion.

To test second harmonic distortion, a low pass filter is used to filter the source output, ensuring that harmonics read by the analyzer are internally generated and not coming from the source. To measure the distortion products, the power at the mixer is set 25 dB higher than specified.

A power meter, power sensor, and power splitter are used to characterize the frequency response of the analyzer so this uncertainty can be eliminated.

For example, if the specification states that with –30 dBm at the input mixer, the distortion products should be suppressed by >75 dBc, the equivalent second harmonic intercept (SHI) is >45dBm (–30 dBm + 75 dBc). Measuring with –15 dBm at the mixer and verifying the distortion products suppressed by >60 dBc also ensures the SHI is >45 dBm (–15 dBm + 60 dBc).

For third order intermodulation distortion, two signals are combined in a directional bridge or directional coupler to provide isolation. These two signals are applied to the analyzer input. The power level of the two signals is several dB higher than specified, so the distortion products should be suppressed by less than the amount specified. In this manner, the equivalent third order intercept (TOI) is measured.

For example, if the specification states that with two –30 dBm signals at the input mixer, the distortion products should be suppressed by >75 dBc, which yields a third order intercept of >7.5 dBm (–30 dBm + (75 dBc/2)). Measuring with –20 dBm at the mixer and verifying the distortion products are suppressed by >55 dBc, the equivalent TOI is also >7.5 dBm (–20 dBm + (55 dBc/2)).

There are no related adjustment procedures for this performance test.

Equipment Required

Synthesized sweeper (2 required)
Power meter, dual channel
Microwave power sensor
Microwave power splitter
Directional bridge
Directional coupler
300 MHz low pass filter
1 GHz low pass filter

ManualsPlus.com

1.8 GHz low pass filter (2 required)
4.4 GHz low pass filter (2 required)
Cable, BNC, 120-cm (48-in)
Cable, APC 3.5, 91-cm (48-in) (2 required)
Adapter, Type-N (m) to APC 3.5 (f) *(3 required)*
Adapter, Type-N (m) to SMA (m)
Adapter, Type-N (m) to BNC (f)
Adapter, Type-N (m) to Type-N (m)
Adapter, SMA (f) to BNC (m)
Adapter, APC 3.5 (f) to APC 3.5 (f)

Procedure

This performance test consists of two parts:

Part 1: Third Order Intermodulation Distortion

Part 2: Second Harmonic Distortion

Perform Part 1 before Part 2.

Part 1: Third Order Intermodulation Distortion

1. Zero and calibrate the power meter and microwave power sensor in log mode (power reads out in dBm), as described in the power meter operation manual.
2. Connect the equipment as shown in Figure 2-49 using the 300 MHz low pass filter with the output of the directional bridge connected to the power sensor.

ManualsPlus.com

Figure 2-49 Third Order Intermodulation Distortion Test Setup

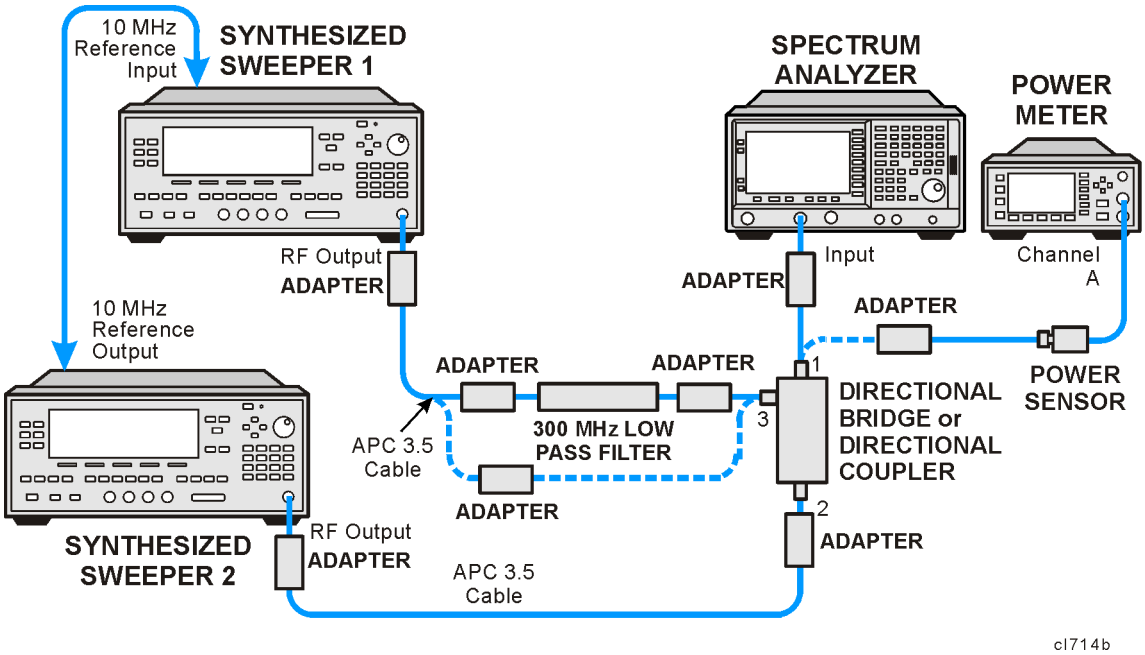

3. Perform step 4 through step 29 using the information and entries from Table 2-74. Then continue with step 31 through step 43.

Table 2-74 Test Equipment Settings for TOI

TOI Test	F1 (MHz)	F2 (MHz)	Low Pass Filter (MHz)	Bridge or Coupler	Presel Center
1	300.0	300.05	300	Bridge	No
Option 1DR	300.0	300.05	300	Bridge	No
2	5000.0	5000.05	None	Coupler	Yes
3	8000.0[a]	8000.05[a]	None	Coupler	Yes

a. This frequency is not tested on the Agilent E4404B.

4. Press **PRESET** on synthesized sweeper 1. Set the CW frequency to F1 as indicated in Table 2-74, and set the power level to 4 dBm.

5. Press **PRESET** on synthesized sweeper 2. Set the CW frequency to F2 as indicated in Table 2-74, and set the controls as follows:

   POWER LEVEL, –10 dBm
   RF Off

6. Enter the power sensor calibration factor for F1 into the power meter.

7. Adjust the power level of synthesized sweeper 1 until the power

ManualsPlus.com

meter reads –12 dBm ±0.1 dB.

8. Disconnect the power sensor from the directional bridge (or directional coupler). Connect the directional bridge (or directional coupler) directly to the analyzer input using an adapter (do not use a cable).

CAUTION Support the directional bridge (or directional coupler) and low pass filter to minimize stress on the analyzer input connector.

9. Press **Preset** on the analyzer. Press the **Factory Preset** softkey, if it is displayed. Press **System, Alignments, Auto Align, Off.** Set the analyzer center frequency to the F1 value for TOI Test 1 in Table 2-74. Then set the analyzer by pressing the following keys:

   FREQUENCY, **CF Step**, **50 kHz** (Man)
   SPAN, **20 kHz**
   AMPLITUDE, **More**, **Y Axis Units** (or **Amptd Units**), **dBm**
   AMPLITUDE, Ref Level, **–5 dBm**
   AMPLITUDE, Attenuation, 5 dB (Man)
   BW/Avg, 1 kHz (Man)
   BW/Avg, Video BW, 300 Hz (Man)
   Peak Search (or **Search**), **More**
   Search Param, **Peak Excursn**, **3 dB**

10. On the analyzer, press the following keys:

    Peak Search (or **Search**)
    Marker →
    Mkr → **CF**
    Delta

11. On the analyzer, Press **FREQUENCY**, ↑. The center frequency should now be equal to synthesized sweeper 2 frequency.

12. If the resolution bandwidth is ≥1 kHz, press **SPAN**, **4 kHz**.

13. On the synthesized sweeper 2, set the RF On.

14. On the analyzer, press **Peak Search** (or **Search**).

15. Adjust the power level of synthesized sweeper 2 until the marker delta (Δ `Mkr1`) amplitude reads 0 dB ±0.05 dB.

16. On the analyzer, press **FREQUENCY**, ↓, ↓. The center frequency should now be lower than synthesized sweeper 1 by the CF Step value.

17. Set the analyzer reference level to –15 dBm.

18. On the analyzer, press **BW/Avg**, **Average**, **20**, and wait for `"Vavg 20"` to appear along the left side of the display.

19. On the analyzer, press **Peak Search** (or **Search**) and record the marker amplitude reading in Table 2-75 as the Lower Distortion Amplitude.

ManualsPlus.com

20. On the analyzer, press **BW/Avg**, **Average Off**.
21. On the analyzer, press **FREQUENCY, Center Freq**, ↑, ↑, ↑. The center frequency should now be one CF Step value above synthesized sweeper 2 frequency.
22. Set synthesized sweeper 1 CW to F2 as indicated in Table 2-74.
23. Set synthesized sweeper 2 CW to F1 as indicated in Table 2-74.
24. On the analyzer, press **BW/Avg**, **Average**, **20**, and wait for "`Vavg 20`" to appear along the left side of the display.
25. On the analyzer, press **Peak Search** (or **Search**) and record the marker amplitude reading in Table 2-75 as the Upper Distortion Amplitude.
26. On the analyzer, press **BW/Avg**, **Average Off**.
27. Of the Lower Distortion Amplitude and Upper Distortion Amplitudes recorded in Table 2-75, enter the most positive value as the Worst Distortion Amplitude in Table 2-75. For example, if the Upper Distortion Amplitude is –62 dBc and the Lower Distortion Amplitude is –63 dBc, enter –62 dBc as the Worst Distortion Amplitude.
28. Enter –17 dBm as the Mixer Level in Table 2-75 (–12 dBm input power – 5 dB input attenuation).
29. Calculate the equivalent TOI by subtracting one half of the Worst Distortion Amplitude (in dB) from the Mixer Level (in dBm). Enter the result in Table 2-75 as the Calculated TOI. For example, if the Worst Distortion Amplitude is –62 dBc and the Mixer Level is –17 dBm, the Calculated TOI would be:

$$\text{TOI} = -17\ \text{dBm} - \left(-\frac{62\ \text{dB}}{2}\right) = -17\ \text{dBm} + 31\ \text{dB} = +14\ \text{dBm}$$

30. Record the Calculated TOI in the performance verification test record as specified in Table 2-75.

Table 2-75 Third Order Intermodulation Distortion Worksheet

TOI Test	Lower Distortion Amplitude	Upper Distortion Amplitude	Worst Distortion Amplitude	Mixer Level	Calculated TOI Test Record Entry
1					1)
Option 1DR					2)
2					3)
3					4)

ManualsPlus.com

31. If the analyzer is an E4404B, E4405B or E4407B and is equipped with Option 1DR, Narrow Resolution Bandwidth, perform step 32 through step 36. Otherwise, continue with step 37.

32. Set synthesized sweeper 1 CW frequency to F1 as indicated in TOI Test 1 of Table 2-74.

33. Set synthesized sweeper 2 CW frequency to F2 as indicated in TOI Test 1 of Table 2-74.

34. Press **Preset** on the analyzer. Press the **Factory Preset** softkey, if it is displayed. Press **System, Alignments, Auto Align, Off.** Set the analyzer center frequency to the F1 value for TOI Test Option 1DR in Table 2-74. Then, set the analyzer by pressing the following keys:

    FREQUENCY, **CF Step**, **50 kHz** (Man)
    SPAN, **20 kHz**
    AMPLITUDE, **More**, **Y Axis Units** (or **Amptd Units**), **dBm**
    AMPLITUDE, Ref Level, **–5 dBm**
    AMPLITUDE, Attenuation, 5 dB (Man)
    BW/Avg, 1 kHz (Man)
    BW/Avg, Video BW, 300 Hz (Man)
    Peak Search (or **Search**), **More**
    Search Param (or Search Criteria), **Peak Excursn**, **3 dB**

35. On the analyzer, press the following keys:

    Peak Search (or **Search**)
    Meas Tools
    Mkr → CF
    SPAN, 500 Hz
    BW/Avg, Res BW, 30 Hz
    BW/Avg, Video BW, 10 Hz

36. Repeat step 9 through step 26. This is the TOI test for Option 1DR.

37. See Figure 2-49. Replace the directional bridge with the directional coupler. The cable from synthesized sweeper 1 should be connected directly to the input of the directional coupler; no low pass filter is required when testing frequencies >3 GHz.

38. Connect the output of the directional coupler to the power sensor.

39. Repeat step 4 through step 29 using information and entries for TOI Test 2 in Table 2-74 and Table 2-75.

40. Connect the output of the directional bridge to the power sensor.

41. Repeat step 4 through step 29 using information and entries for TOI Test 3 in Table 2-74 and Table 2-75.

42. On the analyzer, press **System, Alignments, Auto Align, All**.

43. Part 1: Third Order Intermodulation Distortion is complete. Continue with Part 2: Second Harmonic Distortion.

ManualsPlus.com

Part 2: Second Harmonic Distortion

1. Zero and calibrate the power meter and microwave power sensor. Enter the power sensor 300 MHz calibration factor into the power meter.

Measuring the Noise Level at 6.2 GHz

2. Remove any cables or adapters from the analyzer Input.
3. Press **Preset** on the analyzer. Press the **Factory Preset** softkey, if it is displayed. Set the controls as follows:

   FREQUENCY, **6.2 GHz**
   SPAN, **0 Hz**
   AMPLITUDE, Ref Level, **–40 dBm**
   AMPLITUDE, Attenuation, 10 dB
   BW/Avg, Res BW 1 kHz
   Video BW, 30 Hz
   Sweep, Sweep time, 5 s

4. Wait until "`VAvg 10`" is displayed along the left side of the display.
5. Press **Peak Search** (or **Search**) and record the marker amplitude reading as the 6.2 GHz Noise Level in Table 2-76.

Measuring 300 MHz Frequency Response Error

1. Press **Preset** on the analyzer. Press the **Factory Preset** softkey, if it is displayed. Set the controls as follows:

   FREQUENCY, **300 MHz**
   SPAN, **10 MHz**

2. Connect the equipment as shown in Figure 2-50, with the output of the synthesized sweeper connected to the power splitter input and the power splitter outputs connected to the analyzer and power sensor.

ManualsPlus.com

Figure 2-50 Second Harmonic Distortion Test Setup

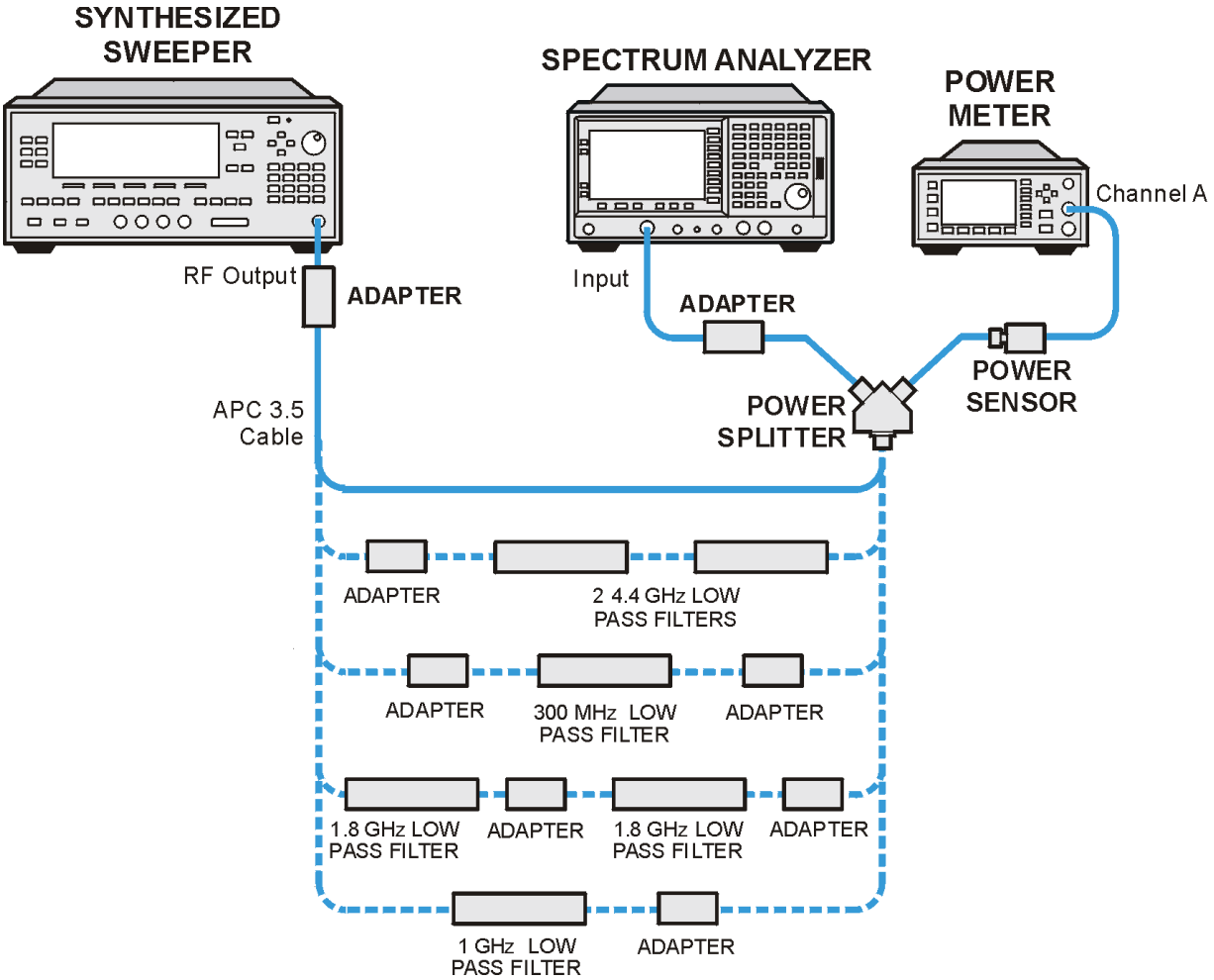

3. Preset the synthesized sweeper and set the controls as follows:

   CW, 300 MHz
   POWER LEVEL, 0 dBm

4. On the analyzer, press **Peak Search** (or **Search**), **Marker, Delta**.
5. Record the power meter reading at 300 MHz in Table 2-76.
6. Set the synthesized sweeper CW to 600 MHz.
7. On the analyzer, press **FREQUENCY**, **600 MHz**, then **Peak Search** (or **Search**).
8. Adjust the synthesized sweeper power level until the marker delta (Δ `Mkr1`) amplitude reads 0 dB ±0.10 dB.
9. Enter the power sensor 600 MHz calibration factor into the power meter.
10. Record the power meter reading at 600 MHz in Table 2-76.

ManualsPlus.com

11. Subtract the power meter reading at 600 MHz from the power meter reading at 300 MHz. Record this difference as the 300 MHz Frequency Response Error in Table 2-76. For example, if the power meter reading at 600 MHz is –6.45 dBm and the power meter reading at 300 MHz is –7.05 dBm, the 300 MHz Frequency Response Error would be –0.60 dB:

$$-0.60 \text{ dB} = -7.05 \text{ dBm} - (-6.45 \text{ dBm})$$

Measuring 900 MHz Frequency Response Error

12. On the synthesized sweeper, press the following:

    CW, 900 MHz
    POWER LEVEL, **0 dBm**

13. On the analyzer, press **FREQUENCY**, **900 MHz**.

14. Enter the power sensor 1 GHz calibration factor into the power meter.

15. On the analyzer, press

    Marker, Off
    Peak Search (or **Search**).
    Marker, Delta

16. Record the power meter reading in Table 2-76 as the 900 MHz power meter reading.

17. On the synthesized sweeper, press **CW**, **1.8 GHz**.

18. On the analyzer, press the following:

    FREQUENCY, **1.8 GHz**
    Peak Search (or **Search**)
    AMPLITUDE

19. On the analyzer, press **Peak Search** (or **Search**).

20. Adjust the synthesized sweeper power level until the marker delta (Δ `Mkr1`) amplitude reads 0 dB ±0.1 dB.

21. Enter the power sensor 2 GHz calibration factor into the power meter.

22. Record the power meter reading in Table 2-76 as the 1.8 GHz power meter reading.

23. On the analyzer, press **Marker, Off**.

24. Subtract the power meter reading at 1.8 GHz from the power meter reading at 900 MHz. Record this difference as the 900 MHz Frequency Response Error in Table 2-76. For example, if the power meter reading at 1.8 GHz is –6.35 dBm and the power meter reading

ManualsPlus.com

at 900 MHz is –7.05 dBm, the 900 MHz Frequency Response Error would be –0.7 dB:

$$-0.70 \text{ dB} = -7.05 \text{ dBm} - (-6.35 \text{ dBm})$$

Measuring 1.55 GHz Frequency Response Error

1. On the synthesized sweeper, press the following:

   CW, 1.55 GHz
   POWER LEVEL, **0 dBm**

2. On the analyzer, press **FREQUENCY**, **1.55 GHz**.
3. Enter the power sensor 2 GHz calibration factor into the power meter.
4. On the analyzer, press the following:

   Marker, **Off**
   Peak Search (or **Search**)

5. On the analyzer, press **Peak Search** (or **Search**), **Marker, Delta**.
6. Record the power meter reading in Table 2-76 as the 1.55 GHz power meter reading.
7. On the synthesized sweeper, press **CW**, **3.1 GHz**.
8. On the analyzer, press **FREQUENCY**, **3.1 GHz**.
9. On the analyzer, press the following:

   Peak Search (or **Search**)
   AMPLITUDE
   Presel Center

10. On the analyzer, press **Peak Search** (or **Search**).
11. Adjust the synthesized sweeper power level until the marker delta (Δ `Mkr1`) amplitude reads 0 dB ±0.1 dB.
12. Enter the power sensor 3 GHz calibration factor into the power meter.
13. Record the power meter reading in Table 2-76 as the 3.1 GHz power meter reading.
14. On the analyzer, press **Marker, Off**.
15. Subtract the power meter reading at 3.1 GHz from the power meter reading at 1.55 GHz. Record this difference as the 1.55 GHz Frequency Response Error in Table 2-76. For example, if the power meter reading at 3.1 GHz is –6.05 dBm and the power meter reading at 1.55 GHz is –7.35 dBm, the 3.1 GHz Frequency Response Error

ManualsPlus.com

would be –1.2 dB:

$$-1.2 \text{ dB} = -7.35 \text{ dBm} - (-6.15 \text{ dBm})$$

Measuring 3.1 GHz Frequency Response Error

1. On the synthesized sweeper, press the following:

   CW, 3.1 GHz
   POWER LEVEL, 0 dBm

2. On the analyzer, press **FREQUENCY**, **3.1 GHz**.
3. Enter the power sensor 3 GHz calibration factor into the power meter.
4. On the analyzer, press the following:

   Marker, **Off**
   Peak Search (or **Search**)
   AMPLITUDE
   Presel Center

5. On the analyzer, press **Peak Search** (or **Search**), **Marker, Delta**.
6. Record the power meter reading in Table 2-76 as the 3.1 GHz power meter reading.
7. On the synthesized sweeper, press **CW**, **6.2 GHz**.
8. On the analyzer, press the following:

   FREQUENCY, **6.2 GHz**
   Peak Search (or **Search**)
   AMPLITUDE
   Presel Center

9. On the analyzer, press **Peak Search** (or **Search**).
10. Adjust the synthesized sweeper power level until the marker delta (Δ `Mkr1`) amplitude reads 0 dB ±0.1 dB.
11. Enter the power sensor 6 GHz calibration factor into the power meter.
12. Record the power meter reading in Table 2-76 as the 6.2 GHz power meter reading.
13. On the analyzer, press **Marker, Off**.
14. Subtract the power meter reading at 6.2 GHz from the power meter reading at 3.1 GHz. Record this difference as the 3.1 GHz Frequency Response Error in Table 2-76. For example, if the power meter reading at 6.2 GHz is –6.05 dBm and the power meter reading at 3.1 GHz is –7.25 dBm, the 3.1 GHz Frequency Response Error would

ManualsPlus.com

be –1.2 dB:

$$-1.2 \text{ dB} = -7.25 \text{ dBm} - (-6.05 \text{ dBm})$$

Table 2-76 Second Harmonic Distortion Worksheet

Description	Measurement
6.2 GHz Noise Level	_____ dBm
Power Meter Reading at 300 MHz	_____ dBm
Power Meter Reading at 600 MHz	_____ dBm
300 MHz Frequency Response Error (FRE)	_____ dB
Power Meter Reading at 900 MHz	_____ dBm
Power Meter Reading at 1.8 GHz	_____ dBm
900 MHz Frequency Response Error (FRE)	_____ dB
Power Meter Reading at 1.55 GHz	_____ dBm
Power Meter Reading at 3.1 GHz	_____ dBm
1.55 GHz Frequency Response Error (FRE)	_____ dB
Power Meter Reading at 3.1 GHz	_____ dBm
Power Meter Reading at 6.2 GHz	_____ dBm
3.1 GHz Frequency Response Error (FRE)	_____ dB

Measuring 300 MHz Second Harmonic Distortion

1. Connect the equipment as shown in Figure 2-50 using the 300 MHz Low Pass Filter.
2. On the synthesized sweeper, press the following:

   CW, 300 MHz
   POWER LEVEL, –10 dBm

3. Enter the power sensor 300 MHz calibration factor into the power meter.
4. On the analyzer, press the following:

   FREQUENCY, Center Freq, 300 MHz
   SPAN, 100 kHz
   AMPLITUDE, Ref Level, –10 dBm
   AMPLITUDE, Attenuation, 10 dB (Man)
   BW/Avg, Res BW 1 kHz (Man)
   Video BW, 1 kHz (Man)
   Markers, Off

5. Adjust the synthesized sweeper power level until the power meter

ManualsPlus.com

reading is –10 dBm ±0.2 dB.

6. On the analyzer, press the following:

   Peak Search (or **Search**), Marker, Delta
   FREQUENCY, **600 MHz**
   BW/Avg, 10

   Wait for the "`VAvg 10`" to appear along the left side of the display.

7. On the analyzer, press **Peak Search** (or **Search**). The marker delta (Δ `Mkr1`) amplitude is the second harmonic suppression.

8. Calculate the 300 MHz Second Harmonic Intercept (SHI) using the second harmonic suppression value read in step 7 and the 300 MHz Frequency Response Error (FRE) from Table 2-76 as follows:

300 MHz SHI = –20 dBm – Second Harmonic Suppression + 300 MHz FRE

For example, if the second harmonic suppression is –59 dB, and the 300 MHz FRE is –0.60 dB, the SHI would be 38.4 dBm:

+38.4 dBm = – 20 dBm – (–59 dB) + (–0.60 dB)

9. Record the 300 MHz SHI as Entry 5 in the performance verification test record.

Measuring 900 MHz Second Harmonic Distortion

1. Replace the 300 MHz low pass filter with the 1 GHz low pass filter as shown in Figure 2-50.

2. On the synthesized sweeper, press the following:

   CW, **900 MHz**
   POWER LEVEL, **–10 dBm**

3. Enter the power sensor 1 GHz calibration factor into the power meter.

4. On the analyzer, press **FREQUENCY**, **Center Freq**, **900 MHz**.

5. On the analyzer, press **Peak Search** (or **Search**).

6. Adjust the synthesized sweeper power level until the power meter reading is –10 dBm ±0.1 dB.

7. On the analyzer, press the following:

   Peak Search (or **Search**)
   Marker, **Delta**
   FREQUENCY, **Center Freq**, **1.8 GHz**

8. On the analyzer, press the following:

ManualsPlus.com

AMPLITUDE, Ref Level, –20 dBm
BW/Avg, Video BW, 30 Hz (Man)

9. On the analyzer, press **BW/Avg, Average**, **10 Hz**. Wait until "VAvg 10" is displayed along the left side of the display.
10. On the analyzer, press **Peak Search** (or **Search**). The marker delta (Δ Mkr1) amplitude reading is the second harmonic suppression.
11. Calculate the 900 MHz Second Harmonic Intercept (SHI) using the second harmonic suppression value read in step 10 and the 300 MHz Frequency Response Error (FRE) from Table 2-76 as follows:

900 MHz SHI = –20 dBm – Second Harmonic Suppression + 900 MHz FRE

For example, if the second harmonic suppression is –73 dB, and the 900 MHz FRE is 0.70 dB, the SHI would be 52.3 dBm:

$$52.3\ \text{dBm} = -20\ \text{dBm} - (-73\ \text{dB}) + (-0.70\ \text{dB})$$

12. Record the 900 MHz SHI as Entry 6 in the performance verification test record.

ManualsPlus.com

Measuring 1.55 GHz Second Harmonic Distortion

1. Replace the 1.GHz low pass filter with the two 1.8 GHz low pass filters as shown in Figure 2-50. Two filters are necessary to reduce the second harmonics from the source to less than –100 dBc.
2. On the synthesized sweeper, press the following:

   CW, **1.55 GHz**
   POWER LEVEL, **6 dBm**

3. Enter the power sensor 2 GHz calibration factor into the power meter.
4. On the analyzer, press the following:

   FREQUENCY, **1.55 GHz**
   AMPLITUDE, Ref Level, **0 dBm**
   AMPLITUDE, Attenuation, 10 dB (Man)
   Peak Search (or **Search**).

5. Adjust the synthesized sweeper power level until the power meter reading is 0 dBm ±0.1 dB.
6. On the analyzer, press the following:

   Peak Search (or **Search**)
   Marker, **Delta**
   FREQUENCY, **Center Freq**, **3.1 GHz**

7. See Figure 2-50. Remove the 1.8 GHz low pass filters and connect the synthesized sweeper output directly to the power splitter input.
8. On the analyzer, press the following:

   Peak Search (or **Search**)
   AMPLITUDE
   Presel Center

9. Reinstall the filters between the synthesized sweeper and the power splitter.
10. On the analyzer, press the following:

    AMPLITUDE, Ref Level, **–40 dBm**
    BW/Avg, Video BW, 30 Hz (Man)

11. On the analyzer, press **BW/Avg, Average**, **10 Hz**. Wait until `"VAvg 10"` is displayed along the left side of the display.
12. On the analyzer, press **Peak Search** (or **Search**). The marker delta (Δ `Mkr1`) amplitude reading is the second harmonic suppression.

ManualsPlus.com

13. Calculate the 1.55 GHz Second Harmonic Intercept (SHI) using the second harmonic suppression value read in step 12 and the 300 MHz Frequency Response Error (FRE) from Table 2-76 as follows:

$$1.55\,\text{GHz SHI} = -20\ \text{dBm} - \text{Second Harmonic Suppression} + 1.55\ \text{GHz FRE}$$

For example, if the second harmonic suppression is –93 dB, and the 1.55 GHz FRE is –1.05 dB, the SHI would be 81.95 dBm:

$$81.95\ \text{dBm} = -10\ \text{dBm} - (-93\ \text{dB}) + (-1.05\ \text{dB})$$

14. Record the 1.55 GHz SHI as Entry 7 in the performance verification test record.

Measuring 3.1 GHz Second Harmonic Distortion

1. Replace the 1.8 GHz low pass filters with the two 4.4 GHz low pass filters as shown in Figure 2-50. Two filters are necessary to reduce the second harmonics from the source to less than –110 dBc.
2. On the synthesized sweeper, press the following:

   CW, **3.1 GHz**
   POWER LEVEL, **6 dBm**

3. Enter the power sensor 3 GHz calibration factor into the power meter.
4. On the analyzer, press the following:

   FREQUENCY, **3.1 GHz**
   AMPLITUDE, Ref Level, **0 dBm**
   AMPLITUDE, Attenuation, 10 dB (Man)

5. On the analyzer, press the following:

   Peak Search (or **Search**)
   AMPLITUDE
   Presel Center

6. Adjust the synthesized sweeper power level until the power meter reading is 0 dBm ±0.1 dB.
7. On the analyzer, press the following:

   Peak Search (or **Search**)
   Marker
   Delta

8. On the analyzer, press the following:

   FREQUENCY, **Center Freq**, **6.2 GHz**

9. See Figure 2-50. Remove the 4.4 GHz low pass filters and connect

ManualsPlus.com

the synthesized sweeper output directly to the power splitter input.

10. On the analyzer, press the following:

    Peak Search (or **Search**)
    AMPLITUDE
    Presel Center

11. Reinstall the filters between the synthesized sweeper and the power splitter.

12. On the analyzer, press the following:

    AMPLITUDE, Ref Level, –40 dBm
    BW/Avg, Video BW, 30 Hz (Man)

13. On the analyzer, press **BW/Avg, Average**, **10 Hz**. Wait until "`VAvg 10`" is displayed along the left side of the display.

14. On the analyzer, press **Peak Search** (or **Search**). The marker delta (Δ `Mkr1`) amplitude reading is the second harmonic suppression.

15. If the marker does not appear to be on a signal, do the following:

    a. Press **Marker, Select Marker** (2)

    b. Compare the marker 2 (`Mkr2`) and the 6.2 GHz Noise Level recorded in Table 2-76.

    c. If the difference between marker 2 (`Mkr2`) and the 6.2 GHz Noise Level recorded in Table 2-76 is less than 2 dB, check the box on the performance verification test record that the 3.1 GHz SHI test was noise limited.

16. If the measurement is not noise limited, calculate the 3.1 GHz Second Harmonic Intercept (SHI) using the second harmonic suppression value read in step 14 and the 3.1 GHz Frequency Response Error (FRE) from Table 2-76 as follows:

$$3.1\,\text{GHz SHI} = -10\ \text{dBm} - \text{Second Harmonic Suppression} + 3.1\ \text{GHz FRE}$$

For example, if the second harmonic suppression is –103 dB, and the 3.1 GHz FRE is –1.20 dB, the SHI would be 91.8 dBm:

$$91.8\ \text{dBm} = -10\ \text{dBm} - (-103\ \text{dB}) + (-1.20\ \text{dB})$$

17. Record the 3.1 GHz SHI as Entry 8 in the performance verification test record.

ManualsPlus.com

33. Gain Compression: Agilent E4401B, E4402B, E4403B, and E4411B

This test verifies the ability of the analyzer to measure relatively low-amplitude signals in the presence of higher-amplitude signals. Gain compression is measured by applying two signals, separated by a defined amount in frequency. The higher-amplitude signal is set to yield the specified total power at the input mixer (the power at the input mixer is defined as the input power level minus the input attenuation). The lower-amplitude signal is set at least 35 dB below the higher-amplitude signal, such that its power does not significantly add to the total power. The higher-amplitude signal is turned off and the lower-amplitude signal level is measured. This is the uncompressed amplitude.

The higher-amplitude signal is turned on and the amplitude of the lower-amplitude signal is again measured. This is the compressed amplitude. The difference between the uncompressed and compressed amplitude is the measured gain compression.

There are no related adjustment procedures for this performance test.

Equipment Required

Synthesized sweeper
Synthesized signal generator
Power meter, dual channel
RF power sensor
Directional bridge
Cable, BNC, 120-cm (48-in)
Cable, APC 3.5 (m) (*2 required*)
Adapter, Type-N (m) to Type-N (m)
Adapter, Type-N (m) to APC 3.5 (f) (3 *required*)
Adapter, Type-N (m) to SMA (m)

Additional Equipment for 75 Ω Input

Power sensor, 75 Ω
Adapter, Type-N (m), to BNC (m), 75 Ω
Adapter, mechanical, Type-N (m), 50 Ω to Type-N (f), 75 Ω

Procedure

1. Zero and calibrate the power meter and power sensor combination in log mode (power reads out in dBm) as described in the power meter operation manual.
2. Connect the equipment as shown in Figure 2-51, with port 1 of the

ManualsPlus.com

directional bridge connected to the power sensor.

75 Ω Input only: Use the 75 Ω power sensor with the mechanical adapter. The power measured at the output of the 50 Ω directional bridge by the 75 Ω power sensor is the equivalent power "seen" by the 75 Ω analyzer.

Figure 2-51 Gain Compression Test Setup

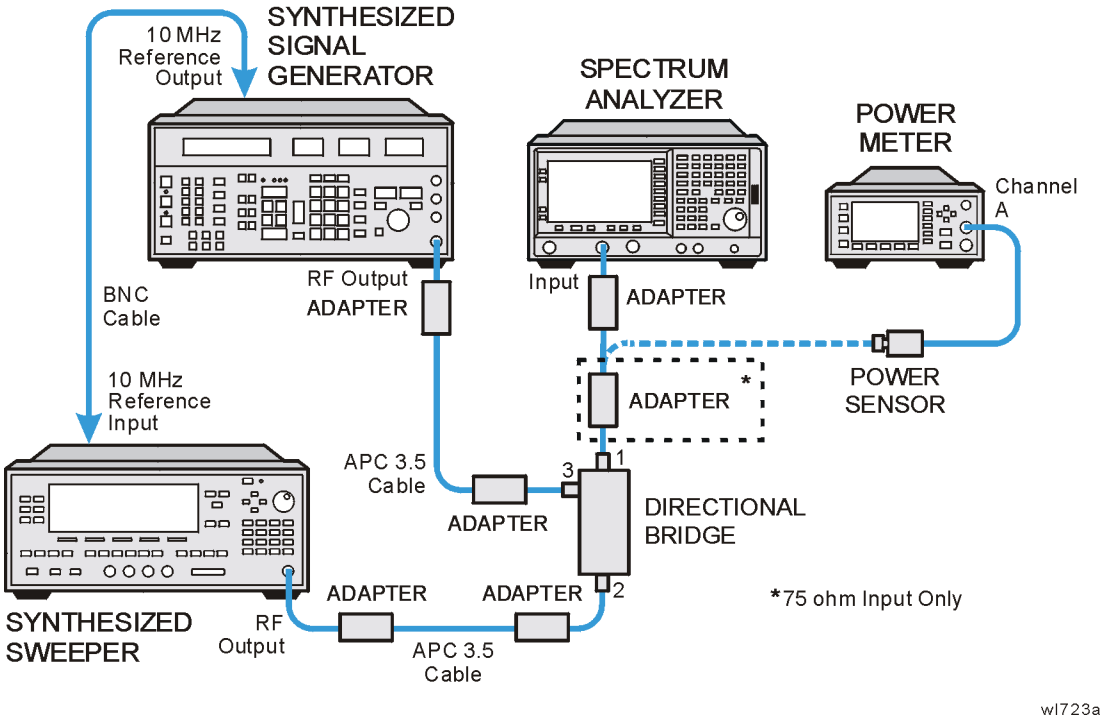

CAUTION Use only 75 Ω cables, connectors, or adapters on instruments with 75 Ω connectors, or damage to the connectors will occur.

3. Set the synthesized signal generator controls as follows:

   FREQUENCY, **50 MHz**
   AMPLITUDE, **–100 dBm**

4. On the synthesized sweeper press **INSTRUMENT PRESET**, then set the controls as follows:

   CW, **53 MHz**
   POWER LEVEL, **–3 dBm**

5. Enter the power sensor calibration factor for the synthesizer frequency into the power meter.

6. Adjust the synthesized sweeper power level setting until the power meter reading is the same as indicated in Table 2-77.

ManualsPlus.com

7. Record the actual synthesized sweeper power level setting in Table 2-77 for each frequency indicated.

Table 2-77 Source Frequency and Amplitude Settings

Synthesized Signal Generator		Synthesized Sweeper		
Frequency (GHz)	**Amplitude (dBm)**	**CW Frequency (MHz)**	**Desired Power Level (dBm)**	**Actual Power Level (dBm)**
0.05	–40	53	0.0	
0.05[a]	–40	50.004	0.0	
1.40	–40	1403	0.0	
2.50[b]	–40[b]	2503[b]	0.0[b]	

a. Agilent E4401B and E4402B with Option 1DR only.
b. Agilent E4402B and E4403B only.

Table 2-78 Analyzer Settings

Test Frequency	Analyzer							Test Record Entry
(MHz)	**Center Freq (GHz)**	**Span (kHz)**	**RBW (kHz)**	**VBW (kHz)**	**Ref Lvl (dBm)**	**Scale (dB)**	**Atten (dB)**	
53	0.05	150	30	0.300	–10.0	10	0.0	1)
50.004[a]	0.05[a]	1.0[a]	0.030[a]	0.030[a]	–10.0[a]	10[a]	0.0[a]	2)
1403	1.40	150	30	0.300	–10.0	10	0.0	3)
2503[b]	2.50[b]	150[b]	30[b]	0.300[b]	–10.0[b]	10[b]	0.0[b]	4)

a. Agilent E4401B and E4402B with Option 1DR only.
b. Agilent E4402B and E4403B only.

8. Repeat step 3 through step 7 for each of the settings listed in Table 2-77. The test at 50 MHz with a span of 1 kHz, is only for the E4401B and E4402B with Option 1DR.

9. Disconnect the power sensor from the directional bridge and connect the directional bridge to the input of the analyzer using an adapter. Do not use a cable.

   75 Ω Input only: Use a 75 Ω adapter, Type-N (m) to BNC (m) and a mechanical adapter, Type-N (m) 50 Ω to Type-N (f) 75 Ω

ManualsPlus.com

10. Set the synthesized sweeper amplitude Off.

11. Set the synthesized signal generator amplitude to –24 dBm.

12. Press **Preset** on the analyzer. Press the **Factory Preset** softkey, if it is displayed. Press **System**, **Alignments**, **Auto Align**, **Off**. Set the analyzer by pressing the following keys:

    FREQUENCY, **Center Freq, 50 MHz** (*or as indicated in* Table 2-78)
    SPAN, **150 kHz** (*or as indicated in* Table 2-78)
    AMPLITUDE, **More**, **Y Axis Units** (or **Amptd Units**), **dBm**
    AMPLITUDE, **Ref Level, –10 dBm**, **Attenuation 0 dB**
    AMPLITUDE, **Scale/Div**, **10 dB**
    BW/Avg, **Res BW**, **30 kHz** (*or as indicated in* Table 2-78)
    BW/Avg, **Video BW**, **300 Hz** (*or as indicated in* Table 2-78)

13. On the synthesized sweeper, set the appropriate power level to the setting recorded in Table 2-77. Then set RF to Off.

    75 Ω *Input only: Adjust the power level for a –2.0 dBm reading.*

14. On the analyzer, press **Peak Search** (or **Search**).

15. Adjust the amplitude of the synthesized signal generator to achieve a marker amplitude reading within 0.5 dB of the value indicated in Table 2-77. The marker amplitude is the uncompressed amplitude.

16. On the analyzer, press the following keys:

    Peak Search (or **Search**)
    Marker
    Delta

17. On the synthesized sweeper, set RF to On. The amplitude should be the same as recorded in Table 2-77.

18. On the analyzer, press **Peak Search** (or **Search**). This is the compressed amplitude. The marker delta (Δ `Mkr1`) amplitude is the measured gain compression.

19. Record the measured gain compression in the performance test record as the Entry listed in Table 2-78.

20. Repeat step 6 through step 19 for each set of settings in Table 2-77 and Table 2-78.

ManualsPlus.com

34. Gain Compression: Agilent E4404B, E4405B, E4407B, and E4408B

This test verifies the ability of the analyzer to measure relatively low-amplitude signals in the presence of higher-amplitude signals. Gain compression is measured by applying two signals, separated by a defined amount in frequency. The higher-amplitude signal is set to yield the specified total power at the input mixer (the power at the input mixer is defined as the input power level minus the input attenuation). The lower-amplitude signal is set at least 35 dB below the higher-amplitude signal, such that its power does not significantly add to the total power. The higher-amplitude signal is turned off and the lower-amplitude signal level is measured. This is the uncompressed amplitude.

The higher-amplitude signal is turned on and the amplitude of the lower-amplitude signal is again measured. This is the compressed amplitude. The difference between the uncompressed and compressed amplitude is the measured gain compression.

There are no related adjustment procedures for this performance test.

Equipment Required

Synthesized sweeper (*2 required*)
Power meter, dual channel
Microwave power sensor
Directional bridge
Directional coupler
Cable, BNC, 120-cm (48-in)
Cable, APC 3.5 (m) (*2 required*)
Adapter, Type-N (m) to Type-N (m)
Adapter, Type-N (m) to APC 3.5 (f) (3 *required*)
Adapter, Type-N (m) to SMA (m)

Additional Equipment for Option BAB

Adapter, Type-N (m), to APC 3.5 (f)

Procedure

1. Zero and calibrate the power meter and power sensor combination in log mode (power reads out in dBm) as described in the power meter operation manual.
2. Connect the equipment as shown in Figure 2-50, with the load port of the directional bridge connected to the power sensor. The directional bridge should be used for measurements of frequencies

ManualsPlus.com

less than or equal to 2.5 GHz. Use the directional coupler for higher frequency measurements.

Figure 2-52 Gain Compression Test Setup

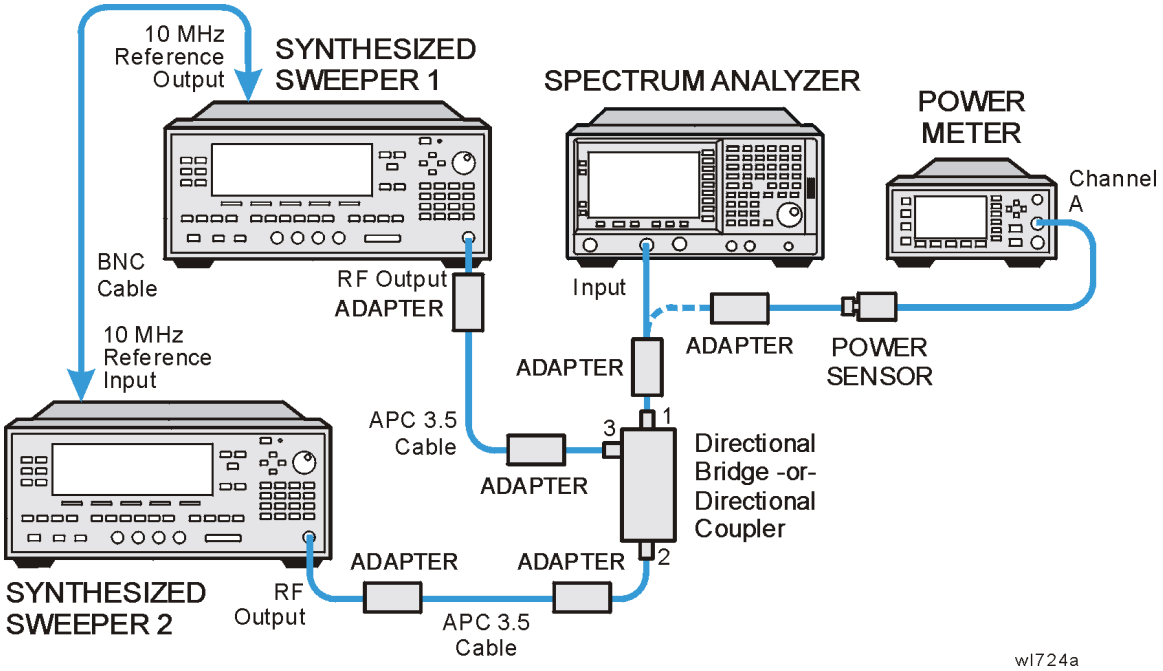

3. On the synthesized sweeper 1 press **PRESET**, then set the controls as follows:

   CW, **50 MHz**
   POWER LEVEL, **–100 dBm**

4. On the synthesized sweeper 2 press **PRESET**, then set the controls as follows:

   CW, **53 MHz**
   POWER LEVEL, **–3 dBm**

5. Enter the power sensor calibration factor for the synthesized sweeper 2 frequency into the power meter.

6. Adjust the synthesized sweeper 2 power level setting until the power meter reading is the same as indicated in Table 2-80.

7. Record the actual synthesized sweeper 2 power level setting in

ManualsPlus.com

Table 2-80 for each frequency indicated.

Table 2-79 Source Frequency and Amplitude Settings

First Synthesized Sweeper		Second Synthesized Sweeper		
CW Frequency (MHz)	Power Level (dBm)	CW Frequency (MHz)	Desired Power Level (dBm)	Actual Power Level (dBm)
50	–40	53	–0.0	
50[a]	–40[a]	50.004[a]	–0.0[a]	
1400	–40	1403	0.0	
2500	–40	2503	0.0	
4400	–40	4403	0.0	
7600[b]	–40	7603	–3.0	
14000[c]	–40	14003	–5.0	

a. Agilent E4404B, E4405B and E4407B with Option 1DR only.
b. Agilent E4405B, E4407B and E4408B only.
c. Agilent E4407B and E4408B only.

Table 2-80 Analyzer Settings

Test Frequency	Analyzer Settings							Test Record Entry
(MHz)	Center Freq (GHz)	Span (kHz)	RBW (kHz)	VBW (kHz)	Ref Lvl (dBm)	Scale (dB)	Atten (dB)	
53	0.05	150	30	0.300	–10.0	10	0.0	1)
50.004[a]	0.05[a]	1.0[a]	0.030[a]	0.030[a]	–10.0[a]	10[a]	0.0[a]	2)
1403	1.40	150	30	0.300	–10.0	10	0.0	3)
2503	2.50	150	30	0.300	–10.0	10	0.0	4)
4403	4.40	150	30	0.300	–10.0	10	0.0	5)
7603[b]	7.60	150	30	0.300	–10.0	10	0.0	6)
14003[c]	14.0	150	30	0.300	–10.0	10	0.0	7)

a. Agilent E4404B, E4405B and E4407B with Option 1DR only.
b. Agilent E4405B, E4407B and E4408B only.

ManualsPlus.com

c. Agilent E4407B and E4408B only.

8. Repeat step 3 through step 7 for each of the settings listed in Table 2-79. Use the directional bridge in place of the coupler for frequencies less than or equal to 2503 MHz. The test at 50 MHz with a span of 1 kHz is only for E4404B, E4405B or E4407B with Option 1DR.

9. Disconnect the power sensor from the directional bridge and connect the directional bridge to the input of the analyzer using an adapter. Do not use a cable.

10. Set the synthesized sweeper 2 power level to Off.

11. Set the synthesized sweeper 1 power level to –24 dBm.

12. Press **Preset** on the analyzer. Press the **Factory Preset** softkey, if it is displayed. Press **System**, **Alignments**, **Auto Align**, **Off**. Set the analyzer by pressing the following keys:

    FREQUENCY, **Center Freq, 50 MHz** (*or as indicated in* Table 2-80)
    SPAN, **150 kHz** (*or as indicated in* Table 2-80)
    AMPLITUDE, **Ref Level**, **–10 dBm**, **Attenuation 0 dB**
    AMPLITUDE, **Scale/Div**, **10 dB**
    BW/Avg, **Res BW**, **30 kHz** (*or as indicated in* Table 2-80)
    BW/Avg, **Video BW**, **300 Hz** (*or as indicated in* Table 2-80)

13. On the synthesized sweeper 2, set the appropriate power level to the setting recorded in Table 2-79. Then set RF to Off.

14. On the analyzer, press **Peak Search** (or **Search**).

15. Adjust the power level of the synthesized sweeper 1 to achieve a marker amplitude reading within 0.5 dB of the value indicated in Table 2-79. The marker amplitude is the uncompressed amplitude.

16. On the analyzer, press the following keys:

    Peak Search (or **Search**)
    Marker
    Delta

17. On the synthesized sweeper 2, set RF to On. The amplitude should be the same as recorded in Table 2-79.

18. On the analyzer, press **Peak Search** (or **Search**). This is the compressed amplitude. The marker delta (Δ `Mkr1`) amplitude is the measured gain compression.

19. Record the measured gain compression in the performance test record as the Entries indicated in Table 2-80.

20. Repeat step 10 through step 19 for each set of settings in Table 2-79 and Table 2-80 for frequencies less than or equal to 2503 MHz.

ManualsPlus.com

21. Replace the directional bridge with the directional coupler.
22. Repeat step 10 through step 19 for the remaining frequencies in Table 2-79.

ManualsPlus.com

35. Displayed Average Noise Level: Agilent E4401B and E4411B

This performance test measures the Displayed Average Noise Level (DANL) within the frequency range specified. The analyzer input is terminated in its characteristic impedance. If the analyzer is also equipped with a tracking generator (Option 1DN or 1DQ), the tracking generator is also terminated in its characteristic impedance and set for maximum leveled output power.

The test tunes the analyzer frequency across the band and uses the marker to locate the frequency with the highest response. It then reads the average noise in zero span using the minimum resolution bandwidth (RBW) specified for the analyzer. Analyzers having Option 1DN (Tracking Generator) installed are tested in a 1 kHz RBW. Analyzers having Option 1DR (Narrow Bandwidths) installed have a minimum RBW of either 100 Hz or 10 Hz. Even though analyzers having Option 1D5 (High Stability Frequency Reference) and firmware revision A.08.00 or later installed have a minimum RBW of 1 Hz, DANL for these analyzers is specified and tested with a 10 Hz RBW.

To reduce measurement uncertainty due to input attenuator switching and resolution bandwidth switching, a reference level offset is added. The 50 MHz alignment signal is used as the amplitude reference for determining the amount of offset required. The offset is removed at the end of the test by pressing instrument preset.

The related adjustment for this procedure is “Frequency Response.”

Equipment Required

Termination, 50 Ω, Type-N (m) (*2 required for Options 1DN or 1DQ*)

Additional Equipment for 75 Ω Input

Termination, 75 Ω, Type-N (m) (*2 required for Option 1DQ*)
Adapter, Type-N (f), to BNC (m), 75 Ω

Procedure

CAUTION Use only 75 Ω cables, connectors, or adapters on instruments with 75 Ω connectors, or damage to the connectors will occur.

1. Set up the analyzers as shown in Figure 2-53.

ManualsPlus.com

Figure 2-53 Displayed Average Noise Level Test Setup

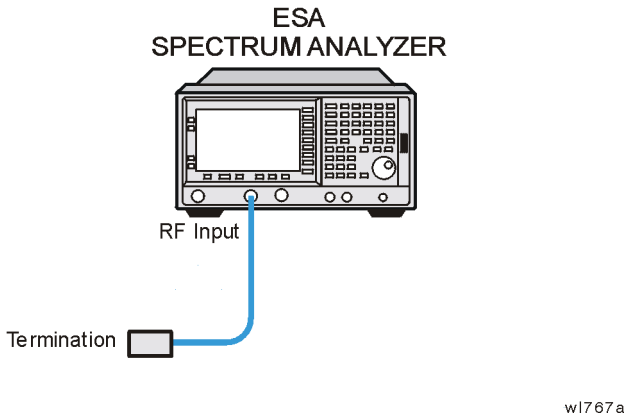

2. Press System, More, Show System. If there is an entry shown which reads `1DR: Narrow Resolution BW` and the analyzer is an E4401B, then enter 10 Hz below as the Minimum RBW. If there is an entry shown which reads `1DR: Narrow Resolution BW` and the analyzer is an E4411B, then enter 100 Hz below as the Minimum RBW. Otherwise, enter 1 kHz as the Minimum RBW (resolution bandwidth). Keep this value in mind as you continue to perform this procedure. Also, take note of whether or not Options 1DN or 1DQ (1.5 GHz Tracking Generator) and Option 1DS (RF Preamplifier) are installed.

   Minimum RBW_____ Hz

   Option 1DN or 1DQ: _____

   Option 1DS: _____

3. On the analyzer, press **Preset**. Press the **Factory Preset** softkey, if it is displayed. Then press the following keys:

   Input/Output (or **Input**), **Amptd Ref** (On)
   FREQUENCY, **Center Freq**, **50 MHz**
   SPAN, **2 kHz**
   AMPLITUDE, –25 dBm (*50 Ω Input only*)
   AMPLITUDE, 28.75 dBmV (75 Ω *Input only*)
   AMPLITUDE, Attenuation, **10 dB**
   BW/Avg, Res BW, 1 kHz
   BW/Avg, Video BW, 1 kHz
   Det/Demod, Detector, Sample

4. On the analyzer, press **Single**, **Peak Search** (or **Search**) and record the Ref Amptd reading below.

   Ref Amptd _____ dBm (*50 Ω Input only*)

   Ref Amptd _____ dBmv (*75 Ω Input only*)

5. If the analyzer does not have Option 1DN or 1DQ (1.5 GHz Tracking

ManualsPlus.com

Generator) installed and the minimum RBW is 100 Hz or 10 Hz, continue with step 10.

6. If the analyzer has a minimum RBW of 1 kHz or has Option 1DN or 1DQ (1.5 GHz Tracking Generator) installed then continue with step 7.

7. On the analyzer, press the following keys:

   AMPLITUDE, Attenuation, 0 dB
   SPAN, 20 kHz
   BW/Avg, Res BW, 1 kHz
   BW/Avg, Video BW, 30 Hz

8. On the analyzer, press **Single**, **Peak Search** (or **Search**) and record the amplitude reading below as Meas Amptd(1 kHz RBW).

   Meas Amptd (1 kHz RBW) _____ dBm (*50 Ω Input only*)

   Meas Amptd (1 kHz RBW) _____ dBmv (*75 Ω Input only*)

9. Calculate the necessary reference level offset by subtracting the Meas Amptd in step 8 from the Ref Amptd in step 4. If the calculated Ref Lvl Offset is greater than 0.05 dB or less than –0.05 dB, record the Ref Lvl Offset value below. Otherwise, enter 0.

Ref Lvl Offset (1 kHz RBW) = Ref Amptd – Meas Amptd (1 kHz RBW)

Ref Lvl Offset (1 kHz RBW)_____ dB

10. If the analyzer is not equipped with Option 1DR, continue with step 14.

11. On the analyzer, press the following keys:

    AMPLITUDE, Attenuation, 0 dB
    SPAN, 500 Hz
    BW/Avg, Res BW, 10 Hz (E4401B)
    BW/Avg, Res BW, 100 Hz (E4411A)
    BW/Avg, Video BW, 1 Hz

12. On the analyzer, press **Single**, **Peak Search** (or **Search**) and record the amplitude reading below as Meas Amptd (100 Hz/10 Hz RBW).

    Meas Amptd (100 Hz/10 Hz RBW) _____ dBm (*50 Ω Input only*)

    Meas Amptd (100 Hz/10 Hz RBW) _____ dBmv (*75 Ω Input only*)

13. Calculate the necessary reference level offset by subtracting the Meas Amptd in step 12 from the Ref Amptd in step 4. If the calculated Ref Lvl Offset is greater than 0.05 dB or less than –0.05 dB, record the Ref Lvl Offset value below. Otherwise, enter 0.

Ref Lvl Offset(100 Hz/10 Hz RBW) = Ref Amptd – Meas Amptd(100 Hz/10 Hz RBW)

ManualsPlus.com

Ref Lvl Offset (100 Hz/10 Hz RBW) _____ dB

14. On the analyzer, press **Input, Amptd Ref** (Off). Then press **AMPLITUDE, More, Ref Lvl Offst**, and enter the value recorded in step 9.

15. Connect the 50 Ω termination to the analyzer input as shown in Figure 2-53.

75 Ω Input only: Connect the 75 Ω termination to the analyzer Input 75 Ω using an adapter.

16. If the analyzer has Option 1DN, 50 Ω tracking generator, do the following:

    a. On the analyzer, press **BW/Avg, Res BW, 1 kHz**.

    b. Press **Source, Amplitude, 0 dBm**.

    c. Connect a 50 Ω termination to the RF OUT 50 Ω.

17. If the analyzer has Option 1DQ (1.5 GHz, 75 Ω Tracking Generator) installed do the following:

    a. On the analyzer, press **Source, Amplitude, 42.75 dBmv**.

    b. Connect a 75 Ω termination to the RF OUT 75 Ω.

Measurement Sequence

The following option-specific DANL Measurement Sequence tables list the procedures to be performed and the parameters to be used in each procedure. Also listed in the tables are test record entry numbers for recording the results in the performance verification test record.

1. Perform all of the following steps (through step 7) that apply to your analyzer using the appropriate subsets in Table 2-81 Table 2-82, Table 2-83 or Table 2-84. Then record the display line amplitude setting as the indicated Test Record entry in the performance verification test record.

2. If the minimum RBW of the analyzer is 1 kHz, perform those procedures listed as Subset A in the appropriate table.

3. If the minimum RBW of the analyzer is 1 kHz and Option 1DS (RF Preamplifier) is installed, also perform those procedures listed in Subset B in the appropriate table.

4. If the minimum RBW of the analyzer is 100 Hz or 10 Hz and Option 1DN or 1DQ (1.5 GHz Tracking Generator) is installed, perform those procedures listed in Subset A in the appropriate table.

5. If the minimum RBW of the analyzer is 10 Hz and both Option 1DS (RF Preamplifier) and Option 1DN or 1DQ (1.5 GHz Tracking Generator) are installed, also perform those procedures listed in Subset B in the appropriate table.

6. If the minimum RBW of the analyzer is 100 Hz or 10 Hz, also

ManualsPlus.com

perform those procedures listed in Subset C in the appropriate table.

7. If the minimum RBW of the analyzer is 10 Hz and Option 1DS (RF Preamplifier) is installed, also perform those procedures listed in Subset D in the appropriate table.
8. After performing all applicable DANL measurement procedures, continue with “Remove Reference Level Offset”.

ManualsPlus.com

Table 2-81 DANL Measurement Sequence, E4401B 50 Ω Inputs

Subset	Procedure	Procedure Parameters				Test Record Entry
		Start Freq	Stop Freq	Test RBW	Preamp State	
A	Meas. DANL at 400 kHz	N/A	N/A	1 kHz	Off	1)
	Measure DANL	1 MHz	10 MHz	1 kHz	Off	2)
	Measure DANL	10 MHz	500 MHz	1 kHz	Off	3)
	Measure DANL	500 MHz	1 GHz	1 kHz	Off	4)
	Measure DANL	1 GHz	1.5 GHz	1 kHz	Off	5)
B	Meas. DANL at 400 kHz	N/A	N/A	1 kHz	On	6)
	Measure DANL	1 MHz	10 MHz	1 kHz	On	7)
	Measure DANL	10 MHz	500 MHz	1 kHz	On	8)
	Measure DANL	500 MHz	1 GHz	1 kHz	On	9)
	Measure DANL	1 GHz	1.5 GHz	1 kHz	On	10)
C	Meas. DANL at 400 kHz	N/A	N/A	10 Hz	Off	11)
	Measure DANL	1 MHz	10 MHz	10 Hz	Off	12)
	Measure DANL	10 MHz	500 MHz	10 Hz	Off	13)
	Measure DANL	500 MHz	1 GHz	10 Hz	Off	14)
	Measure DANL	1 GHz	1.5 GHz	10 Hz	Off	15)
D	Meas. DANL at 400 kHz	N/A	N/A	10 Hz	On	16)
	Measure DANL	1 MHz	10 MHz	10 Hz	On	17)
	Measure DANL	10 MHz	500 MHz	10 Hz	On	18)
	Measure DANL	500 MHz	1 GHz	10 Hz	On	19)
	Measure DANL	1 GHz	1.5 GHz	10 Hz	On	20)

Table 2-82 DANL Measurement Sequence, E4411B 50 Ω Inputs

Subset	Procedure	Procedure Parameters				Test Record Entry
		Start Freq	Stop Freq	Test RBW	Preamp State	
A	Meas. DANL at 400 kHz	N/A	N/A	1 kHz	Off	1)
	Measure DANL	1 MHz	10 MHz	1 kHz	Off	2)

ManualsPlus.com

Table 2-82 DANL Measurement Sequence, E4411B 50 Ω Inputs

Subset	Procedure	Procedure Parameters				Test Record Entry
		Start Freq	Stop Freq	Test RBW	Preamp State	
	Measure DANL	10 MHz	500 MHz	1 kHz	Off	3)
	Measure DANL	500 MHz	1 GHz	1 kHz	Off	4)
	Measure DANL	1 GHz	1.5 GHz	1 kHz	Off	5)
C	Meas. DANL at 400 kHz	N/A	N/A	100 Hz	Off	11)
	Measure DANL	1 MHz	10 MHz	100 Hz	Off	12)
	Measure DANL	10 MHz	500 MHz	100 Hz	Off	13)
	Measure DANL	500 MHz	1 GHz	100 Hz	Off	14)
	Measure DANL	1 GHz	1.5 GHz	100 Hz	Off	15)

Table 2-83 DANL Measurement Sequence, E4401B 75 Ω Inputs

Subset	Procedure	Procedure Parameters				Test Record Entry
		Start Freq	Stop Freq	Test RBW	Preamp State	
A	Measure DANL	1 MHz	10 MHz	1 kHz	Off	21)
	Measure DANL	10 MHz	500 MHz	1 kHz	Off	22)
	Measure DANL	500 MHz	1 GHz	1 kHz	Off	23)
	Measure DANL	1 GHz	1.5 GHz	1 kHz	Off	24)
B	Measure DANL	1 MHz	10 MHz	1 kHz	On	25)
	Measure DANL	10 MHz	500 MHz	1 kHz	On	26)
	Measure DANL	500 MHz	1 GHz	1 kHz	On	27)
	Measure DANL	1 GHz	1.5 GHz	1 kHz	On	28)
C	Measure DANL	1 MHz	10 MHz	10 Hz	Off	29)
	Measure DANL	10 MHz	500 MHz	10 Hz	Off	30)
	Measure DANL	500 MHz	1 GHz	10 Hz	Off	31)
	Measure DANL	1 GHz	1.5 GHz	10 Hz	Off	32)
D	Measure DANL	1 MHz	10 MHz	10 Hz	On	33)
	Measure DANL	10 MHz	500 MHz	10 Hz	On	34)
	Measure DANL	500 MHz	1 GHz	10 Hz	On	35)

ManualsPlus.com

Table 2-83 DANL Measurement Sequence, E4401B 75 Ω Inputs

Subset	Procedure	Procedure Parameters				Test Record Entry
		Start Freq	Stop Freq	Test RBW	Preamp State	
	Measure DANL	1 GHz	1.5 GHz	10 Hz	On	36)

Table 2-84 DANL Measurement Sequence, E4411B 75 Ω Inputs

Subset	Procedure	Procedure Parameters				Test Record Entry
		Start Freq	Stop Freq	Test RBW	Preamp State	
A	Measure DANL	1 MHz	10 MHz	1 kHz	Off	21)
	Measure DANL	10 MHz	500 MHz	1 kHz	Off	22)
	Measure DANL	500 MHz	1 GHz	1 kHz	Off	23)
	Measure DANL	1 GHz	1.5 GHz	1 kHz	Off	24)
C	Measure DANL	1 MHz	10 MHz	100 Hz	Off	29)
	Measure DANL	10 MHz	500 MHz	100 Hz	Off	30)
	Measure DANL	500 MHz	1 GHz	100 Hz	Off	31)
	Measure DANL	1 GHz	1.5 GHz	100 Hz	Off	32)

Measuring Displayed Average Noise Level (DANL)

Use the following procedure for testing DANL over most frequency ranges. The start and stop frequencies and test RBW (1 kHz, 100 Hz or 10 Hz) are specified in the DANL Measurement Sequence Table (Table 2-81 Table 2-82, Table 2-83 or Table 2-84).

1. If the test RBW is 100 Hz or 10 Hz and the analyzer has Option 1DN (1.5 GHz Tracking Generator) installed, press **Source, Amplitude** (Off).

2. Set the analyzer as follows:

   Auto Couple
   FREQUENCY, Start Freq, (*enter specified start frequency*)
   FREQUENCY, Stop Freq, (*enter specified stop frequency*)
   AMPLITUDE, Ref Level, –70 dBm (*50 Ω Input only*)
   Attenuation, 0 dB
   AMPLITUDE, **More**, **Y Axis Units** (or **Amptd Units**)
   dBmV, **More**, **Ref Level**, **–21.24 dBmV** (*75 Ω Input only*)
   AMPLITUDE, More, Ref Lvl Offst, (*enter Ref Lvl Offset (1 kHz) if test RBW = 1 kHz*)
   AMPLITUDE, More, Ref Lvl Offst, (*enter Ref Lvl Offset (100 Hz / 10*

ManualsPlus.com

Hz) if test RBW = 100 Hz or 10 Hz)
BW/Avg, Res BW, 1 MHz
BW/Avg, Video BW, 10 kHz
AMPLITUDE, More, Int Preamp (Off) (*if preamp state = Off*)
AMPLITUDE, More, Int Preamp (On) (*if preamp state = On*)
Sweep, Sweep (Cont)
Sweep, Sweep Time (Auto)

3. On the analyzer, press **Single**, **View/Trace**, **Trace 1**, **Clear Write**, **BW/Avg**, **Average Type** (Video), **Average**, **3**, **Enter**, **Single**.

   Wait until `VAvg 3` is displayed to the left of the graticule (the analyzer will take three sweeps, then stop).

4. On the analyzer, press **Peak Search** (or **Search**). Then press:

   BW/Avg, Average (Off)
   Marker →, **Mkr → CF**

5. If the test RBW is 1 kHz or 100 Hz, press **SPAN, 20 kHz**.

   If the test RBW is 10 Hz, press **SPAN, 500 Hz**.

6. If the test RBW is 1 kHz, press **BW/Avg, Res BW, 1 kHz, Video BW, 30 Hz**.

   If the test RBW is 10 Hz, press **BW/Avg, Res BW, 100 Hz, Video BW, 1 Hz**.

   If the test RBW is 10 Hz, press **BW/Avg, Res BW, 10 Hz, Video BW, 1 Hz**.

7. On the analyzer, press **Single** and wait for the new sweep to finish.

8. Read the average of the trace data, ignoring any residual responses. On the analyzer, press **Display, Display Line** (On), and adjust the display line so that it is centered on the average trace noise, ignoring any residual responses (refer to the Residual Responses verification test for any suspect residuals).

Measuring Displayed Average Noise Level at 400 kHz Non-Option 1DP (50 Ω input only)

1. If the test RBW is 10 Hz and the analyzer has Option 1DN (1.5 GHz Tracking Generator) installed, press **Source, Amplitude** (Off).

2. Press **FREQUENCY, Center Freq, 400 kHz**. Set the analyzer by pressing the following keys:

   SPAN, **20 kHz** (*if test RBW = 1 kHz*)
   SPAN, **500 Hz** (*if test RBW = 10 Hz* or 100 Hz)
   AMPLITUDE, **–70 dBm** (*50 Ω Input only*)
   Attenuation, 0 dB
   AMPLITUDE, More, Ref Lvl Offst, (*enter Ref Lvl Offset (1 kHz) if test RBW = 1 kHz*)

ManualsPlus.com

AMPLITUDE, More, Ref Lvl Offst, (*enter Ref Lvl Offset (100 Hz / 10 Hz) if test RBW = 10 Hz or 100 Hz*)
AMPLITUDE, More, Int Preamp (Off) (*if preamp state = Off*)
AMPLITUDE, More, Int Preamp (On) (*if preamp state = On*)
BW/Avg, Res BW, 1 kHz (*if test RBW = 1 kHz*)
BW/Avg, Res BW, 100 Hz (*if test RBW = 100 Hz*)
BW/Avg, Res BW, 10 Hz (*if test RBW = 10 Hz*)
BW/Avg, Video BW, 30 Hz (*if test RBW = 1 kHz*)
BW/Avg, Video BW, 1 Hz (*if test RBW = 100 Hz or 10 Hz*)

3. On the analyzer, press **Single** and wait for a new sweep to complete.
4. On the analyzer, press **Display**, **Display Line** (On). Adjust the display line so that it is centered on the average trace noise, ignoring any residual responses (refer to the Residual Responses verification test for any suspect residuals).

Remove Reference Level Offset

1. Press **AMPLITUDE, More, Ref Lvl Offst, 0 dB**.
2. On the analyzer, press **Preset**.
3. This performance test is now complete.

ManualsPlus.com

36. Displayed Average Noise Level: Agilent E4402B and E4403B

This performance test measures the Displayed Average Noise Level (DANL) within the frequency range specified. The analyzer input is terminated in its characteristic impedance. If the analyzer is also equipped with a tracking generator (Option 1DN or 1DQ), the tracking generator is also terminated in its characteristic impedance and set for maximum leveled output power.

The test tunes the analyzer frequency across the band and uses the marker to locate the frequency with the highest response. It then reads the average noise in zero span using the minimum resolution bandwidth (RBW) specified for the analyzer. Analyzers having Option 1DN (Tracking Generator) installed are tested in a 1 kHz RBW. Analyzers having Option 1DR (Narrow Bandwidths) installed have a minimum RBW of 100 Hz or 10 Hz. Even though analyzers having Option 1D5 (High Stability Frequency Reference) and firmware revision A.08.00 or later installed have a minimum RBW of 1 Hz, DANL for these analyzers is specified and tested with a 10 Hz RBW.

To reduce measurement uncertainty due to input attenuator switching and resolution bandwidth switching, a reference level offset is added. The 50 MHz alignment signal is used as the amplitude reference for determining the amount of offset required. The offset is removed at the end of the test by pressing instrument preset.

The related adjustment for this procedure is “Frequency Response.”

Equipment Required

Termination, 50 Ω, Type-N (m) (*2 required for Option 1DN*)
Cable, BNC
Adapter, Type-N (m) to BNC (f)

Procedure

1. Connect the AMPTD REF OUT to the 50 Ω Input using a BNC cable and adapter as shown in Figure 2-54.

ManualsPlus.com

Figure 2-54 Displayed Average Noise Level Test Setup

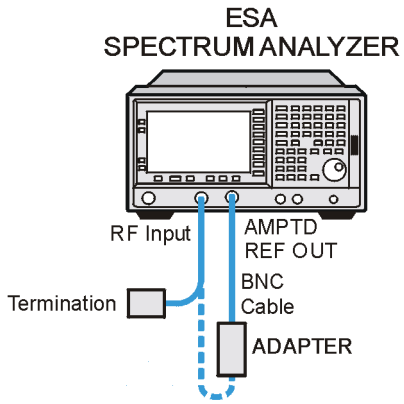

wl752a

2. Press **System**, **More**, **Show System**. If there is an entry shown which reads `1DR: Narrow Resolution BW`, and the analyzer is an E4402B, then enter 10 Hz below as the minimum RBW. If there is an entry shown which reads `1DR:Narrow Resolution BW` and the analyzer is an E4403B, then enter 100 Hz. Otherwise, enter 1 kHz as the minimum RBW (resolution bandwidth). Keep this value in mind as you continue to perform this procedure. Also, take note of whether or not Option 1DN (3.0 GHz Tracking Generator) and Option 1DS (RF Preamplifier) are installed.

   Minimum RBW_____ Hz

   Option 1DN: _____

   Option 1DS: _____

3. Press **Preset** on the analyzer. Press the **Factory Preset** softkey, if it is displayed. Then press the following keys:

   Input/Output (or **Input**), **Amptd Ref Out** (On)
   FREQUENCY, **Center Freq**, **50 MHz**
   SPAN, **2 kHz**
   AMPLITUDE, **–20 dBm**
   AMPLITUDE, **Attenuation**, **10 dB**
   BW/Avg, **Res BW**, **1 kHz**
   BW/Avg, **Video BW**, **1 kHz**
   Det/Demod, **Detector**, **Sample**, **Return**

4. On the analyzer, press **Single**, **Peak Search** (or **Search**) and record the Ref Amptd reading below.

   Ref Amptd _____ dBm

5. If the analyzer does not have Option 1DN (3.0 GHz Tracking Generator) installed and the minimum RBW is 100 Hz or 10 Hz,

ManualsPlus.com

continue with step 11.

6. If the analyzer has a minimum RBW of 1 kHz or has Option 1DN (3.0 GHz Tracking Generator) installed then continue with step 7.

7. On the analyzer, press the following keys:

   AMPLITUDE, Attenuation, 0 dB
   SPAN, 20 kHz
   BW/Avg, Res BW, 1 kHz
   BW/Avg, Video BW, 30 Hz

8. On the analyzer, press **Single**.

9. On the analyzer, press **Peak Search** (or **Search**) and record the amplitude reading below as Meas Amptd (1 kHz RBW).

   Meas Amptd (1 kHz RBW)_____ dBm

10. Calculate the necessary reference level offset by subtracting the Meas Amptd in step 9 from the Ref Amptd in step 4. If the calculated Ref Lvl Offset is greater than 0.05 dB or less than –0.05 dB, record the Ref Lvl Offset value below. Otherwise, enter 0.

Ref Lvl Offset(1 kHz RBW) = Ref Amptd – Meas Amptd(1 kHz RBW)

   Ref Lvl Offset(1 kHz RBW)_____ dB

11. If the analyzer is not equipped with Option 1DR, continue with step 15.

12. On the analyzer, press the following keys:

   AMPLITUDE, Attenuation, 0 dB
   SPAN, 500 Hz
   BW/Avg, Res BW, 10 Hz (E4401B)
   BW/Avg, Res BW, 100 Hz (E4403B)
   BW/Avg, Video BW, 1 Hz

13. On the analyzer, press **Single**, **Peak Search** (or **Search**) and record the amplitude reading below as Meas Amptd(100 Hz/10 Hz RBW).

   Meas Amptd(100 Hz/10 Hz RBW)_____ dB

14. Calculate the necessary reference level offset by subtracting the Meas Amptd in step 13 from the Ref Amptd in step 4. If the calculated Ref Lvl Offset is greater than 0.05 dB or less than –0.05 dB, record the Ref Lvl Offset value below. Otherwise, enter 0.

Ref Lvl Offset(100 Hz/10 Hz RBW) = Ref Amptd – Meas Amptd(100 Hz/10 Hz RBW)

   Ref Lvl Offset(100 Hz/10 Hz RBW)_____ dB

15. On the analyzer, press **Input, Amptd Ref Out** (Off), then **AMPLITUDE, More, Ref Lvl Offst**, and enter the value recorded in step 10.

16. Connect the 50 Ω termination to the analyzer input as shown in

ManualsPlus.com

Figure 2-54.

17. Disconnect the BNC cable and adapter from the AMPTD REF OUT and the 50 Ω Input.

18. If the analyzer has Option 1DN, 50 Ω tracking generator, do the following:

    a. On the analyzer, press **BW/Avg, Res BW, 1 kHz**.

    b. Press **Source, Amplitude, 0 dBm**.

    c. Connect a 50 Ω termination to the RF OUT 50 Ω.

Measurement Sequence

The following DANL Measurement Sequence table lists the procedures to be performed and the parameters to be used in each procedure. Also listed in the table are test record entry numbers for recording the results in the performance verification test record.

1. Perform all of the following steps (through step 7) that apply to your analyzer using the appropriate subsets in Table 2-85 (for E4402B) or Table 2-86 (for E4403B). Then record the display line amplitude setting as the indicated Test Record entry in the performance verification test record.

2. If the minimum RBW of the analyzer is 1 kHz, perform those procedures listed as Subset A in Table 2-85 or Table 2-86.

3. If the minimum RBW of the analyzer is 1 kHz and Option 1DS (RF Preamplifier) is installed, also perform those procedures listed in Subset B in Table 2-85.

4. If the minimum RBW of the analyzer is 100 Hz or 10 Hz and Option 1DN (3.0 GHz Tracking Generator) is installed, perform those procedures listed in Subset A in Table 2-85 or Table 2-86.

5. If the minimum RBW of the analyzer is 10 Hz and both Option 1DS (RF Preamplifier) and Option 1DN (3.0 GHz Tracking Generator) are installed, also perform those procedures listed in Subset B in Table 2-85.

6. If the minimum RBW of the analyzer is 100 Hz or 10 Hz, perform those procedures listed in Subset C in Table 2-85 or Table 2-86.

7. If the minimum RBW of the analyzer is 10 Hz and Option 1DS (RF Preamplifier) is installed, also perform those procedures listed in

ManualsPlus.com

Subset D in Table 2-85.

Table 2-85 DANL Measurement Sequence, E4402B

Subset	Procedure	Procedure Parameters				Test Record Entry[a]
		Start Freq	Stop Freq	Test RBW	Preamp State	
A	Measure DANL	10 MHz	1 GHz	1 kHz	Off	1)
	Measure DANL	1 GHz	2 GHz	1 kHz	Off	2)
	Measure DANL	2 GHz	3 GHz	1 kHz	Off	3)
B	Measure DANL	10 MHz	1 GHz	1 kHz	On	4/13)
	Measure DANL	1 GHz	2 GHz	1 kHz	On	5/14)
	Measure DANL	2 GHz	3 GHz	1 kHz	On	6/15)
C	Measure DANL	10 MHz	1 GHz	10 Hz	Off	7)
	Measure DANL	1 GHz	2 GHz	10 Hz	Off	8)
	Measure DANL	2 GHz	3 GHz	10 Hz	Off	9)
D	Measure DANL	10 MHz	1 GHz	10 Hz	On	10/16)
	Measure DANL	1 GHz	2 GHz	10 Hz	On	11/17)
	Measure DANL	2 GHz	3 GHz	10 Hz	On	12/18)

a. There are two possible entries for measurements made with the preamplifier on, depending upon the ambient temperature. The first entry is for measurements made with an ambient temperature outside of the 20° to 30° C range, but within the 0° to 55° C range. The second entry is for measurements made with an ambient temperature within the 20° to 30° C range.

Table 2-86 DANL Measurement Sequence, E4403B

Subset	Procedure	Procedure Parameters				Test Record Entry
		Start Freq	Stop Freq	Test RBW	Preamp State	
A	Measure DANL	10 MHz	1 GHz	1 kHz	Off	1)
	Measure DANL	1 GHz	2 GHz	1 kHz	Off	2)
	Measure DANL	2 GHz	3 GHz	1 kHz	Off	3)
C	Measure DANL	10 MHz	1 GHz	100 Hz	Off	7)
	Measure DANL	1 GHz	2 GHz	100 Hz	Off	8)
	Measure DANL	2 GHz	3 GHz	100 Hz	Off	9)

8. After performing all applicable DANL measurement procedures,

ManualsPlus.com

continue with "Remove Reference Level Offset".

Measuring Displayed Average Noise Level (DANL)

Use the following procedure for testing DANL over most frequency ranges. The start and stop frequencies and test RBW (1 kHz, 100 Hz or 10 Hz) are specified in the DANL Measurement Sequence Table (Table 2-85 or Table 2-86).

1. If the test RBW is 100 Hz or 10 Hz and the analyzer has Option 1DN (1.5 GHz Tracking Generator) installed, press **Source, Amplitude** (Off).
2. Set the analyzer as follows:

   Auto Couple
   FREQUENCY, Start Freq, (*enter specified start frequency*)
   FREQUENCY, Stop Freq, (*enter specified stop frequency*)
   AMPLITUDE, **–70 dBm**
   Attenuation, 0 dB
   AMPLITUDE, More, Ref Lvl Offst, (*enter Ref Lvl Offset (1 kHz) if test RBW = 1 kHz*)
   AMPLITUDE, More, Ref Lvl Offst, (*enter Ref Lvl Offset (100 Hz / 10 Hz) if test RBW = 100 Hz or 10 Hz*)
   BW/Avg, Res BW, 1 MHz
   BW/Avg, Video BW, 10 kHz
   AMPLITUDE, More, Int Preamp (Off) (*if preamp state = Off*)
   AMPLITUDE, More, Int Preamp (On) (*if preamp state = On*)
   Sweep, **Sweep** (Cont)
   Sweep, **Sweep Time** (Auto)

3. On the analyzer, press **Single**, **View/Trace**, **Trace 1**, **Clear Write**, **BW/Avg**, **Average Type** (Video), **Average**, **3**, **Enter**, **Single**
4. Wait until `VAvg 3` is displayed to the left of the graticule (the analyzer will take three sweeps, then stop).
5. On the analyzer, press the following keys:

   BW/Avg, **Average** (Off)
   Peak Search (or **Search**)
   BW/Avg, **Average** (On)
   Marker→ , **Mkr→ CF**

6. If the test RBW is 1 kHz, press **SPAN, 20 kHz**.

   If the test RBW is 100 Hz or 10 Hz, press **SPAN, 500 Hz**.
7. If the test RBW is 1 kHz, press **BW/Avg, Res BW, 1 kHz, Video BW, 30 Hz**.

   If the test RBW is 100 Hz, press **BW/Avg, Res BW, 100 Hz, Video BW, 10 Hz**.

   If the test RBW is 10 Hz, press **BW/Avg, Res BW, 10 Hz,**

ManualsPlus.com

Video BW, 1 Hz.

8. On the analyzer, press **Single** and wait for the new sweep to finish.
9. Read the average of the trace data, ignoring any residual responses. On the analyzer, press **Display, Display Line** (On), and adjust the display line so that it is centered on the average trace noise, ignoring any residual responses (refer to the Residual Responses verification test for any suspect residuals).

Remove Reference Level Offset

1. Press **AMPLITUDE, More, Ref Lvl Offst, 0 dB**.
2. On the analyzer, press **Preset**.
3. This performance test is now complete.

ManualsPlus.com

37. Displayed Average Noise Level: Agilent E4404B and E4405B

This performance test measures the displayed average noise level (DANL) within the frequency range specified. The analyzer input is terminated in its characteristic impedance. If the analyzer is also equipped with a tracking generator (Option 1DN), the tracking generator is also terminated in its characteristic impedance and set for maximum leveled output power.

The test tunes the analyzer frequency across the band and uses the marker to locate the frequency with the highest response. It then reads the average noise in zero span using the minimum resolution bandwidth (RBW) specified for the analyzer. Analyzers having Option 1DN (Tracking Generator) installed are tested in a 1 kHz RBW. Analyzers having Option 1DR (Narrow Bandwidths) installed have a minimum RBW of 100 Hz or 10 Hz. Even though analyzers having Option 1D5 (High Stability Frequency Reference) and firmware revision A.08.00 or later installed have a minimum RBW of 1 Hz, DANL for these analyzers is specified and tested with a 10 Hz RBW.

To reduce measurement uncertainty due to input attenuator switching and resolution bandwidth switching, a reference level offset is added. The 50 MHz alignment signal is used as the amplitude reference for determining the amount of offset required. The offset is removed at the end of the test by pressing instrument preset.

The related adjustment for this procedure is “Frequency Response.”

Equipment Required

Termination, 50 Ω, Type-N (m) (*2 required for Option 1DN*)
Cable, BNC
Adapter, Type-N (m) to BNC (f)

Procedure

1. Connect the AMPTD REF OUT to the 50 Ω Input using a BNC cable and adapter as shown in Figure 2-55.

ManualsPlus.com

Figure 2-55 Displayed Average Noise Level Test Setup

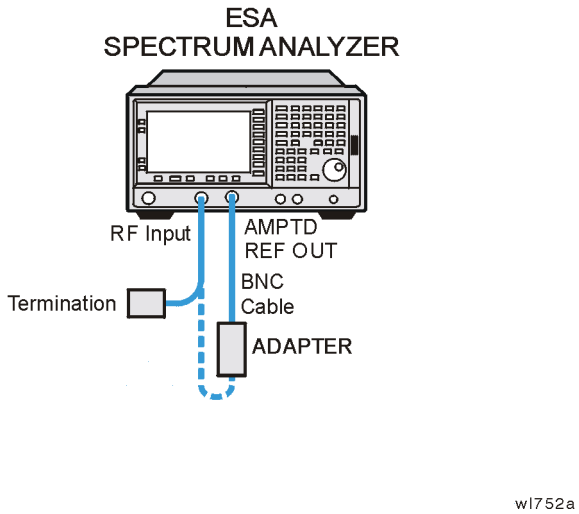

2. Press System, More, Show System. If there is an entry shown which reads `1DR: Narrow Resolution BW`, then enter 10 Hz below; otherwise enter 1 kHz as the minimum RBW (resolution bandwidth). Keep this value in mind as you continue to perform this procedure. Also, take note of whether or not Option 1DN (3.0 GHz Tracking Generator) and Option 1DS (RF Preamplifier) are installed.

   Minimum RBW_____ Hz

   Option 1DN: _____

   Option 1DS: _____

3. Press **Preset** on the analyzer. Press the **Factory Preset** softkey, if it is displayed. Then press the following keys:

   Input/Output (or **Input**), **Amptd Ref Out** (On)
   FREQUENCY, **Center Freq**, **50 MHz**
   SPAN, **2 kHz**
   AMPLITUDE, **–20 dBm**
   AMPLITUDE, **Attenuation**, **10 dB**
   BW/Avg, **Res BW**, **1 kHz**
   BW/Avg, **Video BW**, **1 kHz**
   Det/Demod, **Detector**, **Sample**, **Return**

4. On the analyzer, press **Single**, **Peak Search** (or **Search**) and record the Ref Amptd reading below.

   Ref Amptd _____ dBm

5. If the analyzer does not have Option 1DN (3.0 GHz Tracking Generator) installed and the minimum RBW is 10 Hz, continue with step 10.

ManualsPlus.com

6. If the analyzer has a minimum RBW of 1 kHz or has Option 1DN (3.0 GHz Tracking Generator) installed then continue with step 7.
7. On the analyzer, press the following keys:

   AMPLITUDE, Attenuation, 0 dB
   SPAN, 20 kHz
   BW/Avg, Res BW, 1 kHz
   BW/Avg, Video BW, 30 Hz

8. On the analyzer, press **Single**, **Peak Search** (or **Search**) and record the amplitude reading below as Meas Amptd (1 kHz RBW).

   Meas Amptd (1 kHz RBW)_____ dB

9. Calculate the necessary reference level offset by subtracting the Meas Amptd in step 8 from the Ref Amptd in step 4. If the calculated Ref Lvl Offset is greater than 0.05 dB or less than –0.05 dB, record the Ref Lvl Offset value below. Otherwise, enter 0.

Ref Lvl Offset (1 kHz RBW) = Ref Amptd – Meas Amptd (1 kHz RBW)

   Ref Lvl Offset (1 kHz RBW)_____ dB

10. If the analyzer is not equipped with Option 1DR, continue with step 14.
11. On the analyzer, press the following keys:

   AMPLITUDE, Attenuation, 0 dB
   SPAN, 500 Hz
   BW/Avg, Res BW, 10 Hz
   BW/Avg, Video BW, 1 Hz

12. On the analyzer, press **Single**, **Peak Search** (or **Search**) and record the amplitude reading below as Meas Amptd (10 Hz RBW).

   Meas Amptd (10 Hz RBW)_____ dB

13. Calculate the necessary reference level offset by subtracting the Meas Amptd in step 12 from the Ref Amptd in step 4. If the calculated Ref Lvl Offset is greater than 0.05 dB or less than –0.05 dB, record the Ref Lvl Offset value below. Otherwise, enter 0.

Ref Lvl Offset (10 Hz RBW) = Ref Amptd – Meas Amptd (10 Hz RBW)

   Ref Lvl Offset (10 Hz RBW)_____ dB

14. On the analyzer, press **Input, Amptd Ref Out** (Off), then **AMPLITUDE, More, Ref Lvl Offst**, and enter the value recorded in step 8.
15. Connect the 50 Ω termination to the analyzer input as shown in Figure 2-55.
16. Disconnect the BNC cable and adapter from the AMPTD REF OUT and the 50 Ω Input.

ManualsPlus.com

17. If the analyzer has Option 1DN, 50 Ω tracking generator, do the following:
    a. On the analyzer, press **BW/Avg, Res BW, 1 kHz**.
    b. Press **Source, Amplitude, 0 dBm**.
    c. Connect a 50 Ω termination to the RF OUT 50 Ω.

Measurement Sequence

The following model-specific DANL Measurement Sequence tables list the procedures to be performed and the parameters to be used in each procedure. Also listed in the tables are test record entry numbers for recording the results in the performance verification test record.

1. Perform all of the following steps (through step 7) that apply to your analyzer using the appropriate subsets in Table 2-87 or Table 2-88. Then record the display line amplitude setting as the indicated Test Record entry in the performance verification test record.
2. If the minimum RBW of the analyzer is 1 kHz, perform those procedures listed as Subset A in Table 2-87 or Table 2-88.
3. If the minimum RBW of the analyzer is 1 kHz and Option 1DS (RF Preamplifier) is installed, also perform those procedures listed in Subset B in Table 2-87 or Table 2-88.
4. If the minimum RBW of the analyzer is 10 Hz and Option 1DN (3.0 GHz Tracking Generator) is installed, perform those procedures listed in Subset A in Table 2-87 or Table 2-88.
5. If the minimum RBW of the analyzer is 10 Hz and both Option 1DS (RF Preamplifier) and Option 1DN (3.0 GHz Tracking Generator) are installed, also perform those procedures listed in Subset B in Table 2-87 or Table 2-88.
6. If the minimum RBW of the analyzer is 10 Hz, also perform those procedures listed in Subset C in Table 2-87 or Table 2-88.
7. If the minimum RBW of the analyzer is 10 Hz and Option 1DS (RF Preamplifier) is installed, also perform those procedures listed in Subset D in Table 2-87 or Table 2-88.
8. After performing all applicable DANL measurement procedures, continue with Remove Reference Level Offset.

Table 2-87 DANL Measurement Sequence, E4404B

Subset	Procedure	Procedure Parameters				Test Record Entry[a]
		Start Freq	Stop Freq	Test RBW	Preamp State	
A	Measure DANL	10 MHz	1 GHz	1 kHz	Off	1)

ManualsPlus.com

Table 2-87 DANL Measurement Sequence, E4404B

Subset	Procedure	Procedure Parameters				Test Record Entry[a]
		Start Freq	Stop Freq	Test RBW	Preamp State	
	Measure DANL	1 GHz	2 GHz	1 kHz	Off	2)
	Measure DANL	2 GHz	3 GHz	1 kHz	Off	3)
	Measure DANL	3 GHz	6 GHz	1 kHz	Off	4)
	Measure DANL	6 GHz	6.7 GHz	1 kHz	Off	5)
B	Measure DANL	10 MHz	1 GHz	1 kHz	On	6/17)
	Measure DANL	1 GHz	2 GHz	1 kHz	On	7/18)
	Measure DANL	2 GHz	3 GHz	1 kHz	On	8/19)
C	Measure DANL	10 MHz	1 GHz	10 Hz	Off	9)
	Measure DANL	1 GHz	2 GHz	10 Hz	Off	10)
	Measure DANL	2 GHz	3 GHz	10 Hz	Off	11)
	Measure DANL	3 GHz	6 GHz	10 Hz	Off	12)
	Measure DANL	6 GHz	6.7 GHz	10 Hz	Off	13)
D	Measure DANL	10 MHz	1 GHz	10 Hz	On	14/20)
	Measure DANL	1 GHz	2 GHz	10 Hz	On	15/21)
	Measure DANL	2 GHz	3 GHz	10 Hz	On	16/22)

a. There are two possible entries for measurements made with the preamplifier on, depending upon the ambient temperature. The first entry is for measurements made with an ambient temperature outside of the 20° to 30° C range, but within the 0° to 55° C range. The second entry is for measurements made with an ambient temperature within the 20° to 30° C range.

Table 2-88 DANL Measurement Sequence, E4405B

Subset	Procedure	Procedure Parameters				Test Record Entry[a]
		Start Freq	Stop Freq	Test RBW	Preamp State	
A	Measure DANL	10 MHz	1 GHz	1 kHz	Off	1)
	Measure DANL	1 GHz	2 GHz	1 kHz	Off	2)
	Measure DANL	2 GHz	3 GHz	1 kHz	Off	3)
	Measure DANL	3 GHz	6 GHz	1 kHz	Off	4)
	Measure DANL	6 GHz	12 GHz	1 kHz	Off	5)

ManualsPlus.com

Table 2-88 DANL Measurement Sequence, E4405B

Subset	Procedure	Procedure Parameters				Test Record Entry[a]
		Start Freq	Stop Freq	Test RBW	Preamp State	
	Measure DANL	12 GHz	13.2 GHz	1 kHz	Off	6)
B	Measure DANL	10 MHz	1 GHz	1 kHz	On	7/19)
	Measure DANL	1 GHz	2 GHz	1 kHz	On	8/20)
	Measure DANL	2 GHz	3 GHz	1 kHz	On	9/21)
C	Measure DANL	10 MHz	1 GHz	10 Hz	Off	10)
	Measure DANL	1 GHz	2 GHz	10 Hz	Off	11)
	Measure DANL	2 GHz	3 GHz	10 Hz	Off	12)
	Measure DANL	3 GHz	6 GHz	10 Hz	Off	13)
	Measure DANL	6 GHz	12 GHz	10 Hz	Off	14)
	Measure DANL	12 GHz	13.2 GHz	10 Hz	Off	15)
D	Measure DANL	10 MHz	1 GHz	10 Hz	On	16/22)
	Measure DANL	1 GHz	2 GHz	10 Hz	On	17/23)
	Measure DANL	2 GHz	3 GHz	10 Hz	On	18/24)

a. There are two possible entries for measurements made with the preamplifier on, depending upon the ambient temperature. The first entry is for measurements made with an ambient temperature outside of the 20° to 30° C range, but within the 0° to 55° C range. The second entry is for measurements made with an ambient temperature within the 20° to 30° C range.

Measuring Displayed Average Noise Level (DANL)

Use the following procedure for testing DANL over most frequency ranges. The start and stop frequencies and test RBW (1 kHz or 10 Hz) are specified in the DANL Measurement Sequence Table (Table 2-87 or Table 2-88).

1. If the test RBW is 10 Hz and the analyzer has Option 1DN (1.5 GHz Tracking Generator) installed, press **Source, Amplitude** (Off).
2. Set the analyzer as follows:

   Auto Couple
   FREQUENCY, Start Freq, (*enter specified start frequency*)
   FREQUENCY, Stop Freq, (*enter specified stop frequency*)
   AMPLITUDE, **–70 dBm**
   Attenuation 0 dB
   AMPLITUDE, More, Ref Lvl Offst, (*enter Ref Lvl Offset (1 kHz) if test*

ManualsPlus.com

RBW = 1 kHz)
AMPLITUDE, More, Ref Lvl Offst, (*enter Ref Lvl Offset (10 Hz) if test RBW = 10 Hz*)
BW/Avg, Res BW, 1 MHz
BW/Avg, Video BW, 10 kHz
AMPLITUDE, More, Int Preamp (Off) (*if preamp state = Off*)
AMPLITUDE, More, Int Preamp (On) (*if preamp state = On*)
Sweep, Sweep (Cont)
Sweep, **Sweep Time** (Auto)

3. If the analyzer is equipped with Option 1DN and the current stop frequency is >3 GHz, press **Source, Amplitude** (Off).
4. On the analyzer, press **Single**, **View/Trace**, **Trace 1**, **Clear Write**, **BW/Avg**, **Average Type** (Video), **Average**, **3**, **Enter**, **Single**.

   Wait until `VAvg 3` is displayed to the left of the graticule (the analyzer will take three sweeps, then stop).
5. On the analyzer, press the following keys:

   Peak Search (or **Search**)
   BW/Avg Average (Off)
   Marker→, Mкр→ XΦ
6. If the test RBW is 1 kHz, press **SPAN, 20 kHz**.

   If the test RBW is 10 Hz, press **SPAN, 500 Hz**.
7. If the test RBW is 1 kHz, press **BW/Avg, Res BW, 1 kHz, Video BW, 30 Hz**.

   If the test RBW is 10 Hz, press **BW/Avg, Res BW, 10 Hz, Video BW, 1 Hz**.
8. On the analyzer, press **Single** and wait for the new sweep to finish.
9. Read the average of the trace data, ignoring any residual responses. On the analyzer, press **Display, Display Line** (On), and adjust the display line so that it is centered on the average trace noise, ignoring any residual responses (refer to the Residual Responses verification test for any suspect residuals).

Remove Reference Level Offset

1. Press **AMPLITUDE, More, Ref Lvl Offst, 0 dB**.
2. On the analyzer, press **Preset**.
3. This performance test is now complete.

ManualsPlus.com

38. Displayed Average Noise Level: Agilent E4407B and E4408B

This performance test measures the displayed average noise level (DANL) within the frequency range specified. The analyzer input is terminated in its characteristic impedance. If the analyzer is also equipped with a tracking generator (Option 1DN), the tracking generator is also terminated in its characteristic impedance and set for maximum leveled output power.

The test tunes the analyzer frequency across the band and uses the marker to locate the frequency with the highest response. It then reads the average noise in zero span using the minimum resolution bandwidth (RBW) specified for the analyzer. Analyzers having Option 1DN (Tracking Generator) installed are tested in a 1 kHz RBW. Analyzers having Option 1DR (Narrow Bandwidths) installed have a minimum RBW of 100 Hz or 10 Hz. Even though analyzers having Option 1D5 (High Stability Frequency Reference) and firmware revision A.08.00 or later installed have a minimum RBW of 1 Hz, DANL for these analyzers is specified and tested with a 10 Hz RBW.

To reduce measurement uncertainty due to input attenuator switching and resolution bandwidth switching, a reference level offset is added. The 50 MHz alignment signal is used as the amplitude reference for determining the amount of offset required. The offset is removed at the end of the test by pressing instrument preset.

The related adjustment for this procedure is “Frequency Response.”

Equipment Required

Termination, 50 Ω, Type-N (m) (*2 required for Option 1DN*)
Cable, BNC
Adapter, Type-N (m) to BNC (f)

Additional Equipment for Option BAB

Adapter, APC 3.5 (f) to Type-N (f)

Procedure

1. Connect the AMPTD REF OUT to the 50 Ω Input using a BNC cable and adapter as shown in Figure 2-56.

ManualsPlus.com

Figure 2-56 Displayed Average Noise Level Test Setup

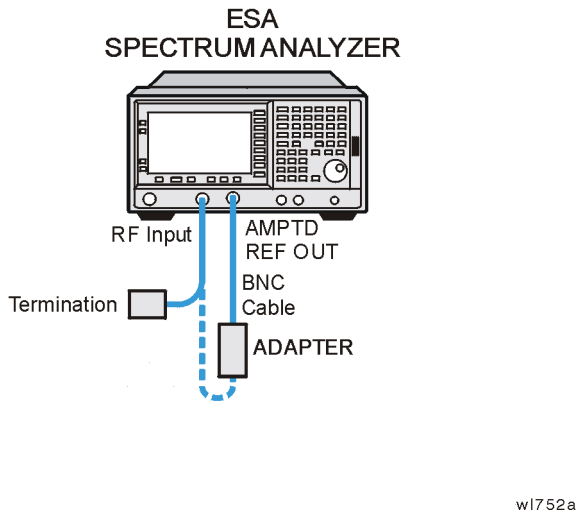

2. Press System, More, Show System. If there is an entry shown which reads `1DR: Narrow Resolution BW` and the analyzer is an E4407B, then enter 10 Hz below as the Minimum RBW. If there is an entry shown which reads `1DR: Narrow Resolution BW` and the analyzer is an E4408B, then enter 100 Hz. Otherwise, enter 1 kHz as the minimum RBW (resolution bandwidth). Keep this value in mind as you continue to perform this procedure. Also, take note of whether or not Options 1DN (3.0 GHz Tracking Generator) and Option 1DS (RF Preamplifier) are installed.

   Minimum RBW_____ Hz

   Option 1DN: _____

   Option 1DS: _____

3. Press **Preset** on the analyzer. Press the **Factory Preset** softkey, if it is displayed. Then press the following keys:

   Input/Output (or **Input**), **Amptd Ref Out** (On)
   FREQUENCY, **Center Freq**, **50 MHz**
   SPAN, **2 kHz**
   AMPLITUDE, **–20 dBm**
   AMPLITUDE, Attenuation, **10 dB**
   BW/Avg, Res BW, 1 kHz
   BW/Avg, Video BW, 1 kHz
   Det/Demod, Detector, Sample, Return

4. On the analyzer, press **Single**.

5. On the analyzer, press **Peak Search** (or **Search**) and record the Ref Amptd reading below.

   Ref Amptd _____ dBm

ManualsPlus.com

6. If the analyzer does not have Option 1DN (3.0 GHz Tracking Generator) installed and the minimum RBW is 100 Hz or 10 Hz, continue with step 12.
7. If the analyzer has a minimum RBW of 1 kHz or has Option 1DN (3.0 GHz Tracking Generator) installed then continue with step 8.
8. On the analyzer, press the following keys:

   AMPLITUDE, Attenuation, 0 dB
   SPAN, 20 kHz
   BW/Avg, Res BW, 1 kHz
   BW/Avg, Video BW, 30 Hz

9. On the analyzer, press **Single**.
10. On the analyzer, press **Peak Search** (or **Search**) and record the amplitude reading below as Meas Amptd(1 kHz RBW).

    Meas Amptd(1 kHz RBW)_____ dB

11. Calculate the necessary reference level offset by subtracting the Meas Amptd in step 10 from the Ref Amptd in step 5. If the calculated Ref Lvl Offset is greater than 0.05 dB or less than –0.05 dB, record the Ref Lvl Offset value below. Otherwise, enter 0.

Ref Lvl Offset(1 kHz RBW) = Ref Amptd – Meas Amptd(1 kHz RBW)

Ref Lvl Offset(1 kHz RBW)_____ dB

12. If the analyzer is not equipped with Option 1DR, continue with step 17.
13. On the analyzer, press the following keys:

    AMPLITUDE, Attenuation, 0 dB
    SPAN, 500 Hz
    BW/Avg, Res BW, 10 Hz (E4407B)
    BW/Avg, Res BW, 100 Hz (E4408B)
    BW/Avg, Video BW, 1 Hz

14. On the analyzer, press **Single**.
15. On the analyzer, press **Peak Search** (or **Search**) and record the amplitude reading below as Meas Amptd(100 Hz/10 Hz RBW).

    Meas Amptd(100 Hz/10 Hz RBW)_____ dB

16. Calculate the necessary reference level offset by subtracting the Meas Amptd in step 15 from the Ref Amptd in step 5. If the calculated Ref Lvl Offset is greater than 0.05 dB or less than –0.05 dB, record the Ref Lvl Offset value below. Otherwise, enter 0.

Ref Lvl Offset(100 Hz/10 Hz RBW) = Ref Amptd – Meas Amptd(100 Hz/10 Hz RBW)

Ref Lvl Offset(100 Hz/10 Hz RBW)_____ dB

ManualsPlus.com

17. On the analyzer, press **Input, Amptd Ref Out** (Off), then **AMPLITUDE, More, Ref Lvl Offst**, and enter the value recorded in step 10.
18. Connect the 50 Ω termination to the analyzer input as shown in Figure 2-56.
19. Disconnect the BNC cable and adapter from the AMPTD REF OUT and the 50 Ω Input.
20. If the analyzer is equipped with Option 1DN, 50 Ω tracking generator, do the following:
    a. On the analyzer, press **BW/Avg, Res BW, 1 kHz**.
    b. Press **Source, Amplitude, 0 dBm**.
    c. Connect a 50 Ω termination to the RF OUT 50 Ω.

Measurement Sequence

The following model-specific DANL Measurement Sequence table lists the procedures to be performed and the parameters to be used in each procedure. Also listed in the table are test record entry numbers for recording the results in the performance verification test record.

1. Perform all of the following steps (through step 7) that apply to your analyzer using the appropriate subsets in Table 2-89 (E4407B) or Table 2-90 (E4408B). Then record the display line amplitude setting as the indicated Test Record entry in the performance verification test record.
2. If the minimum RBW of the analyzer is 1 kHz, perform those procedures listed as Subset A in Table 2-89 or Table 2-90.
3. If the minimum RBW of the analyzer is 1 kHz and Option 1DS (RF Preamplifier) is installed, also perform those procedures listed in Subset B in Table 2-89.
4. If the minimum RBW of the analyzer is 100 Hz or 10 Hz and Option 1DN (3.0 GHz Tracking Generator) is installed, perform those procedures listed in Subset A in Table 2-89 or Table 2-90.
5. If the minimum RBW of the analyzer is 10 Hz and both Option 1DS (RF Preamplifier) and Option 1DN (3.0 GHz Tracking Generator) are installed, also perform those procedures listed in Subset B in Table 2-89.
6. If the minimum RBW of the analyzer is 100 Hz or 10 Hz, also perform those procedures listed in Subset C in Table 2-89 or Table 2-90.
7. If the minimum RBW of the analyzer is 10 Hz and Option 1DS (RF Preamplifier) is installed, also perform those procedures listed in

ManualsPlus.com

Subset D in Table 2-89.

Table 2-89 DANL Measurement Sequence, E4407B

Subset	Procedure	Procedure Parameters				Test Record Entry[a]
		Start Freq	Stop Freq	Test RBW	Preamp State	
A	Measure DANL	10 MHz	1 GHz	1 kHz	Off	1)
	Measure DANL	1 GHz	2 GHz	1 kHz	Off	2)
	Measure DANL	2 GHz	3 GHz	1 kHz	Off	3)
	Measure DANL	3 GHz	6 GHz	1 kHz	Off	4)
	Measure DANL	6 GHz	12 GHz	1 kHz	Off	5)
	Measure DANL	12 GHz	22 GHz	1 kHz	Off	6)
	Measure DANL	22 GHz	26.5 GHz	1 kHz	Off	7)
B	Measure DANL	10 MHz	1 GHz	1 kHz	On	8/21)
	Measure DANL	1 GHz	2 GHz	1 kHz	On	9/22)
	Measure DANL	2 GHz	3 GHz	1 kHz	On	10/23)
C	Measure DANL	10 MHz	1 GHz	10 Hz	Off	11)
	Measure DANL	1 GHz	2 GHz	10 Hz	Off	12)
	Measure DANL	2 GHz	3 GHz	10 Hz	Off	13)
	Measure DANL	3 GHz	6 GHz	10 Hz	Off	14)
	Measure DANL	6 GHz	12 GHz	10 Hz	Off	15)
	Measure DANL	12 GHz	22 GHz	10 Hz	Off	16)
	Measure DANL	22 GHz	26.5 GHz	10 Hz	Off	17)
D	Measure DANL	10 MHz	1 GHz	10 Hz	On	18/24)
	Measure DANL	1 GHz	2 GHz	10 Hz	On	19/25)
	Measure DANL	2 GHz	3 GHz	10 Hz	On	20/26)

a. There are two possible entries for measurements made with the preamplifier on, depending upon the ambient temperature. The first entry is for measurements made with an ambient temperature outside of the 20° to 30° C range, but within the 0° to 55° C range. The second entry is for measurements made with an ambient temperature within the 20° to 30° C range.

ManualsPlus.com

Table 2-90 DANL Measurement Sequence, E4408B

Subset	Procedure	Procedure Parameters				Test Record Entry
		Start Freq	Stop Freq	Test RBW	Preamp State	
A	Measure DANL	10 MHz	1 GHz	1 kHz	Off	1)
	Measure DANL	1 GHz	2 GHz	1 kHz	Off	2)
	Measure DANL	2 GHz	3 GHz	1 kHz	Off	3)
	Measure DANL	3 GHz	6 GHz	1 kHz	Off	4)
	Measure DANL	6 GHz	12 GHz	1 kHz	Off	5)
	Measure DANL	12 GHz	22 GHz	1 kHz	Off	6)
	Measure DANL	22 GHz	26.5 GHz	1 kHz	Off	7)
C	Measure DANL	10 MHz	1 GHz	100 Hz	Off	11)
	Measure DANL	1 GHz	2 GHz	100 Hz	Off	12)
	Measure DANL	2 GHz	3 GHz	100 Hz	Off	13)
	Measure DANL	3 GHz	6 GHz	100 Hz	Off	14)
	Measure DANL	6 GHz	12 GHz	100 Hz	Off	15)
	Measure DANL	12 GHz	22 GHz	100 Hz	Off	16)
	Measure DANL	22 GHz	26.5 GHz	100 Hz	Off	17)

8. After performing all applicable DANL measurement procedures, continue with Remove Reference Level Offset.

Measuring Displayed Average Noise Level

Use the following procedure for testing DANL over most frequency ranges. The start and stop frequencies and test RBW (1 kHz, 100 Hz or 10 Hz) are specified in the DANL Measurement Sequence Table (Table 2-89 or Table 2-90).

1. If the test RBW is 100 Hz or 10 Hz and the analyzer has Option 1DN (1.5 GHz Tracking Generator) installed, press **Source, Amplitude** (Off).

2. Set the analyzer as follows:

   Auto Couple
   FREQUENCY, Start Freq, (*enter specified start frequency*)
   FREQUENCY, Stop Freq, (*enter specified stop frequency*)
   AMPLITUDE, –70 dBm
   Attenuation, 0 dB
   AMPLITUDE, More, Ref Lvl Offst, (*enter Ref Lvl Offset (1 kHz) if test*

ManualsPlus.com

RBW = 1 kHz)
AMPLITUDE, More, Ref Lvl Offst, (*enter Ref Lvl Offset (100 Hz / 10 Hz) if test RBW = 10 Hz or 100 Hz*)
BW/Avg, Res BW, 1 MHz
BW/Avg, Video BW, 10 kHz
AMPLITUDE, More, Int Preamp (Off) (*if preamp state = Off*)
AMPLITUDE, More, Int Preamp (On) (*if preamp state = On*)
Sweep, **Sweep** (Cont)
Sweep, **Sweep Time** (Auto)

3. If the analyzer is equipped with Option 1DN and the current stop frequency is >3 GHz, press **Source, Amplitude** (Off).
4. On the analyzer, press **Single, View/Trace, Trace 1, Clear Write, BW/Avg, Average Type (Video), Average, 3, Enter, Single.**

   Wait until `VAvg 3` is displayed to the left of the graticule (the analyzer will take three sweeps, then stop).
5. On the analyzer, press the following keys:

   Peak Search (or **Search**)
   BW/Avg, Average (Off)
   Marker→, **Mkr→ CF**
6. If the test RBW is 1 kHz, press **SPAN, 20 kHz**.

   If the test RBW is 100 Hz or 10 Hz, press **SPAN, 500 Hz**.
7. If the test RBW is 1 kHz, press **BW/Avg, Res BW, 1 kHz, Video BW, 30 Hz**.

   If the test RBW is 100 Hz, press **BW/Avg, Res BW, 100 Hz, Video BW, 10 Hz**.

   If the test RBW is 10 Hz, press **BW/Avg, Res BW, 10 Hz, Video BW, 1 Hz**.
8. On the analyzer, press **Single** and wait for the new sweep to finish.
9. Read the average of the trace data, ignoring any residual responses. On the analyzer, press **Display, Display Line** (On), and adjust the display line so that it is centered on the average trace noise, ignoring any residual responses (refer to the Residual Responses verification test for any suspect residuals).

Remove Reference Level Offset

10. Press **AMPLITUDE, More, Ref Lvl Offst, 0 dB**.
11. On the analyzer, press **Preset**.
12. This performance test is now complete.

ManualsPlus.com

39. Residual Responses

The analyzer input is terminated and the analyzer is swept from 150 kHz to 1 MHz. Then the analyzer is swept in incremental 10 MHz spans from 1 MHz to the upper frequency range. Any responses above the specification are noted.

There are no related adjustment procedures for this performance test.

Equipment Required

Termination, 50 Ω Type-N (m)

Additional Equipment for 75 Ω Input

Termination, 75 Ω, BNC (m)
Adapter, Type-N (f) to BNC (m), 75 Ω

Additional Equipment for Option BAB

Adapter, Type-N (f) to APC 3.5 (f)

CAUTION Use only 75 Ω cables, connectors, or adapters on instruments with 75 Ω input, or damage to the input connector will occur.

Procedure

150 kHz to 1 MHz

1. Connect the 50 Ω termination to the analyzer input as shown in Figure 2-57.

   75 Ω Input: Use the adapter to connect the 75 Ω termination, and continue with step 4.

ManualsPlus.com

Figure 2-57 Residual Response Test Setup

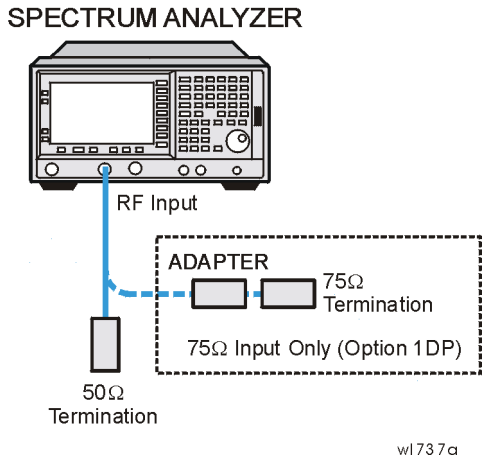

2. Press **Preset** on the analyzer. Press the **Factory Preset** softkey, if it is displayed. Set the analyzer by pressing the following keys:

   FREQUENCY, Start Freq, 150 kHz
   FREQUENCY, Stop Freq, 1 MHz
   AMPLITUDE, **–60 dBm**
   AMPLITUDE, Attenuation, 0 dB
   BW/Avg, 3 kHz
   BW/Avg, Video BW, 1 kHz
   Display, Display Line On, –90 dBm

3. Press **Single** and wait for a new sweep to finish. Look for any residual responses at or above the display line.

   If a residual is suspected, press **Single** again. A residual response will persist on successive sweeps, but a noise peak will not. Note the frequency and amplitude of any residual responses above the display line in Table 2-91.

4. Press **Preset** on the analyzer. Press the **Factory Preset** softkey, if it is displayed. Set the analyzer by pressing the following keys:

   FREQUENCY, **Center Freq**, **5.9 MHz**
   FREQUENCY, CF Step, 9.9 MHz
   SPAN, 10 MHz
   AMPLITUDE, **–60 dBm** (*50 Ω Input only*)
   AMPLITUDE, –11.2 dBmV (*75 Ω Input only*)
   AMPLITUDE, Attenuation, 0 dB
   BW/Avg, 10 kHz
   BW/Avg, Video BW, 3 kHz
   Display, Display Line On, –90 dBm, (*50 Ω Input only*)
   Display, Display Line On, –36 dBmV (*75 Ω Input only*)

5. Repeat step 6 and step 7 until the complete range of frequencies has

ManualsPlus.com

been checked for the model and frequency ranges below.

Agilent Model	Frequency Range
E4401B and E4411B	1 MHz to 1.5 GHz
E4402B and E4403B	1 MHz to 3.0 GHz
E4404B, E4405B, E4407B, and E4408B	1 MHz to 6.7 GHz

6. Press **Single** and wait for a new sweep to finish. Look for any residual responses at or above the display line.

   If a residual is suspected, press **Single** again. A residual response will persist on successive sweeps, but a noise peak will not. Record the frequency and amplitude of any residual responses above the display line in Table 2-91.

7. Press **FREQUENCY, Center Freq,** ↑.

   If there are any residuals at or near the frequency specification limits (1 MHz, 1.5 GHz, 3 GHz, or 6.7 GHz), it is recommended that a known frequency source be used as a frequency marker. This will ensure that testing is done at or below the specification limits.

Table 2-91 Residual Responses Worksheet

Frequency (MHz)	Amplitude (dBm or dBmV)

8. Record the highest residual from Table 2-91 as Test Record entry 1 in the performance verification test record. If no residuals are found, then record “N/A” in the performance verification test record.

ManualsPlus.com

40. Fast Time Domain Amplitude Accuracy: Agilent E4401B, E4402B, E4404B, E4405B, and E4407B (Option AYX)

The analyzer amplitude reference signal is used to compare the amplitude level of a normal sweep time (≥5 ms) to a fast sweep time (≤5 ms) using the marker functions. The difference should be less than the marker readout resolution specification for the fast sweep times.

Equipment Required

Cable, BNC, 122 cm (48 in)
Adapter, Type-N (m) to BNC (f)

Procedure

Fast Sweep Time Amplitude Accuracy

1. Connect the equipment as shown in Figure 2-58.

Figure 2-58 Fast Time Domain Amplitude Accuracy Test Setup

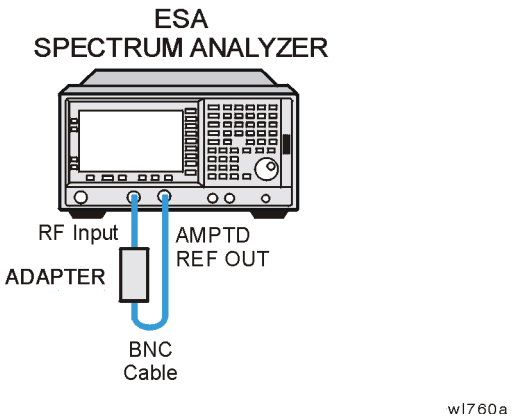

NOTE No test setup is required for the Agilent E4401B.

2. Press **Preset** on the analyzer. Press the **Factory Preset** softkey, if it is displayed.
3. Set the analyzer as follows:

   FREQUENCY, **50 MHz**
   SPAN, **Zero Span**
   Sweep 5 ms
   Input/Output (or **Input**), **Amptd Ref** (On) (Agilent E4401B only)

ManualsPlus.com

Input/Output (or **Input**), **Amptd Ref Out** (On) (Agilent E4402B, E4404B, E4405B, E4407B only)
AMPLITUDE, **Scale Type** (Lin)
AMPLITUDE, More, Y-Axis Units (or **Amptd Units**), **Volts**
AMPLITUDE, **Ref Level**, **12.57 mV** (Agilent E4401B, 50 W only)
AMPLITUDE, **Ref Level**, **15.05 mV** (Agilent E4401B, 75 W only)
AMPLITUDE, **Ref Level**, **30.73 mV** (Agilent E4402B, E4404B, E4405B, E4407B only)

4. On the analyzer, press:

   Marker, **More 1 of 2**, **Function**
   Marker Noise, **Single**
   Marker, **Delta**
   Sweep, **1 ms**
   Single

5. If the marker delta (Δ `Mkr1`) amplitude readout (the second line) is not expressed as a percentage, subtract 1 from the marker delta (Δ `Mkr1`) amplitude (ignore the "X") and multiply the result by 100 to obtain the amplitude error in percent:

$$\text{Amplitude Error} = (\Delta\text{Mkr1} - 1.0) \times 100$$

6. If the marker delta (Δ `Mkr1`) amplitude readout is expressed as a percentage, subtract 100% from the marker delta (Δ `Mkr1`) amplitude reading to obtain the amplitude error in percent:

$$\text{Amplitude Error} = \Delta\text{Mkr1} - 100\%$$

7. Record the Amplitude Error as Test Record entry 1 in the performance verification test record.

ManualsPlus.com

41. Tracking Generator Absolute Amplitude and Vernier Accuracy: Agilent E4401B and E4411B (Option 1DN or 1DQ)

A calibrated power sensor is connected to the tracking generator output to measure the power level at 50 MHz.

The power meter is set to relative mode so that future power level readings are in dB relative to the reference power level setting. The output power level setting is decreased in 1 dB steps and the power level is measured at each step. The difference between the ideal and actual power levels is calculated at each step.

Since a power sweep is accomplished by stepping through the vernier settings, the peak-to-peak variation of the vernier accuracy is equal to the power sweep accuracy.

The related adjustments for this performance test are “Tracking Generator ALC Calibration” and “Tracking Generator Frequency Slope.”

Equipment Required

Power meter, compatible with power sensor
RF power sensor, 50 Ω

Additional Equipment for Option 1DQ

Power sensor, 75 Ω
Adapter, Type-N (f) to BNC (m), 75 Ω
Adapter, Type-N (f), 75 Ω to Type-N (m), 50 Ω

Procedure

CAUTION Use only 75 Ω cables, connectors, or adapters on instruments with 75 Ω connectors, or damage to the connectors will occur.

For Agilent E4411B analyzers, this test must be performed at 20 to 30° C.

1. Press **Preset** on the analyzer. Press the **Factory Preset** softkey, if it is displayed. Set the analyzer by pressing the following keys:

   FREQUENCY, **Center Freq**, **50 MHz**
   SPAN, **Zero Span**
   AMPLITUDE, **0 dBm** (*Option 1DN*)
   AMPLITUDE, **42.76 dBmV** (*Option 1DQ*)
   Source, **Amplitude** (On), **0 dBm** (*Option 1DN*)

ManualsPlus.com

Source, **Amplitude** (On), **42.76 dBmV** (*Option 1DQ*)
Source, **Attenuation**, **0 dB**
Single

2. Zero and calibrate the power meter and power sensor in log mode (power reads out in dBm), as described in the power meter operation manual. Enter the 50 MHz Cal Factor of the power sensor into the power meter.
3. Connect the 50 Ω power sensor to the RF OUT as shown in Figure 2-59.

Figure 2-59 Absolute Amplitude, Vernier, and Power Sweep Accuracy Test Setup

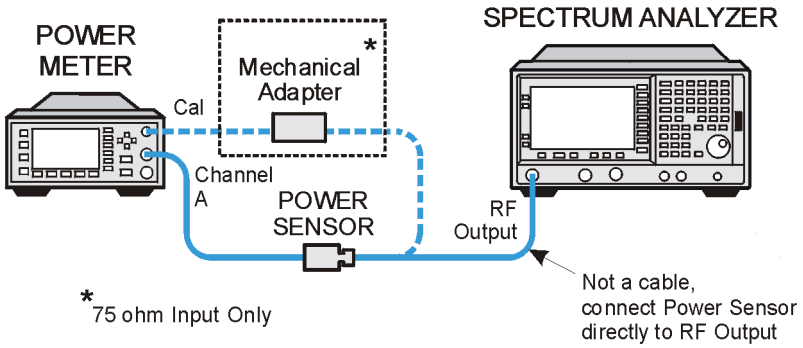

Option 1DQ: Connect the 75 Ω power sensor to the RF OUT 75 Ω as shown in Figure 2-59.

4. Read the power level displayed on the power meter and record the result as Test Record entry 1 of the performance verification test record as the Absolute Amplitude Accuracy.

   Absolute Amplitude Accuracy at 50 MHz = _____dB

   Option 1DQ: *Add 6 dB to the power level displayed on the power meter and record the result as Test Record entry 1 of the performance verification test record as the Absolute Amplitude Accuracy*.

5. Set the power meter to dB relative mode as described in the power meter operation manual so that the readout is in power level relative to the power level at 50 MHz (press **Rel/Offset**, **Rel**).
6. Set the source amplitude to the settings indicated in Table 2-92.

   Option 1DQ: Use the source amplitude settings for Option 1DQ analyzers.

7. Press **Single** on the analyzer. At each setting, record the power level displayed on the power meter as Measured Power Level in Table 2-92.
8. Calculate the Vernier Accuracy by subtracting the Source Vernier

ManualsPlus.com

Setting from the Measured Power Level for each Source Amplitude Setting in Table 2-92.

Vernier Accuracy = Measured Power Level (dB) – Source Vernier Setting (dB)

9. Locate the most positive and most negative Vernier Accuracy Values for Source Vernier Settings of –1 dBm to –10 dBm recorded in Table 2-92. Record the Positive Vernier Accuracy as Test Record entry 2 and the Negative Vernier Accuracy as Test Record entry 3 in the performance verification test record.

   Option 1DQ: For source amplitudes of 41.76 dBmV to 27.76 dBmV.

   Positive Vernier Accuracy _____ dB

   Negative Vernier Accuracy _____ dB

10. Locate the most positive and most negative Vernier Accuracy values for all Source Amplitude Settings in Table 2-92 and record these values below:

    Positive Power Sweep Accuracy _____ dB

    Negative Power Sweep Accuracy _____ dB

11. Calculate the Power Sweep Accuracy by subtracting the Negative Power Sweep Accuracy recorded in the previous step from the Positive Power Sweep Accuracy recorded in the previous step. Record the Power Sweep Accuracy as Test Record entry 4 in the performance verification test record.

Power Sweep Accuracy = Positive Power Sweep Accuracy – Negative Power Sweep Accuracy

Power Sweep Accuracy _____ dB

ManualsPlus.com

Table 2-92 Vernier Accuracy Worksheet

Source Amplitude Setting		Source Vernier Setting	Measured Power Level	Vernier Accuracy
Option 1DN (dBm)	Option 1DQ (dBmV)	(dB)	(dB)	(dB)
0 (Ref)	42.76 (Ref)	0 (Ref)	NA	NA
–1	41.76	–1		
–2	40.76	–2		
–3	39.76	–3		
–4	38.76	–4		
–5	37.76	–5		
–6	36.76	–6		
–7	35.76	–7		
–8	34.76	–8		
–9	33.76	–9		
–10	32.76	–10		
–11	31.76	–11		
–12	30.76	–12		
–13	29.76	–13		
–14	28.76	–14		
–15	27.76	–15		

ManualsPlus.com

ManualsPlus.com

42. Tracking Generator Absolute Amplitude and Vernier Accuracy: Agilent E4402B, E4403B, E4404B, E4405B, E4407B, and E4408B (Option 1DN)

A calibrated power sensor is connected to the tracking generator output to measure the power level at 50 MHz.

The power meter is set to relative mode so that future power level readings are in dB relative to the reference power level setting. The output power level setting is decreased in 1 dB steps and the power level is measured at each step. The difference between the ideal and actual power levels is calculated at each step.

Since a power sweep is accomplished by stepping through the vernier settings, the peak-to-peak variation of the vernier accuracy is equal to the power sweep accuracy.

The related adjustment for this performance test is the front panel **Align Now**, **TG (Ext Cable)** under the **System**, **Alignments** menu.

Equipment Required

Power meter, compatible with power sensor
Power sensor, 50 Ω

Procedure

1. Press **Preset** on the analyzer. Press the **Factory Preset** softkey, if it is displayed. Set the analyzer by pressing the following keys:

   FREQUENCY, **Center Freq**, **50 MHz**
   SPAN, **Zero Span**
   AMPLITUDE, **0 dBm**
   System, **Alignments**, **Auto Align**, **Off**
   Source Amptd, **Amplitude** (On), **–20 dBm**
   Source Amptd, **Attenuation** (Man), **16 dB**
   Single Sweep

2. Zero and calibrate the power meter and power sensor in log mode (power reads out in dBm), as described in the power meter operation manual. Enter the 50 MHz Cal Factor of the power sensor into the power meter.

3. Connect the 50 Ω power sensor to the RF output as shown in Figure 2-60.

Figure 2-60 Absolute Amplitude, Vernier, and Power Sweep Accuracy Test

ManualsPlus.com

Setup

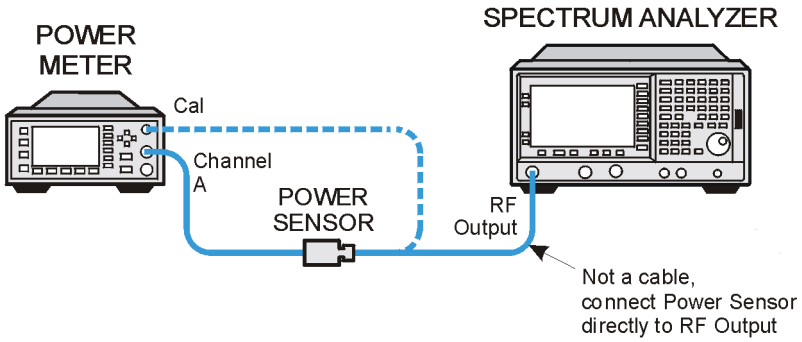

wl766a

4. Read the power level displayed on the power meter, add 20 dB, and record the result as Test Record entry 1 of the performance verification test record as the Absolute Amplitude Accuracy.

   Absolute Amplitude Accuracy at 50 MHz = _____dB

5. Set the power meter to dB relative mode as described in the power meter operation manual so that the readout is in power level relative to the power level at 50 MHz (press **Rel/Offset**, **Rel**).

6. Press **Single** on the analyzer. At each setting, record the power level displayed on the power meter in Table 2-93.

7. Set the source amplitude to the settings indicated in Table 2-93.

Table 2-93 Vernier and Power Sweep Accuracy Worksheet

Source Amplitude Setting (dBm)	Source Vernier Setting (dBm)	Measured Power Level (dB)	Vernier Accuracy (dB)
–18	-2		**2)**
-19	-3		**3)**
-20 (Ref)	-4	N/A	N/A
-21	-5		**4)**
-22	-6		**5)**
-23	-7		**6)**
-24	-8		**7)**
-25	-9		**8)**
-26	-10		**9)**

8. Calculate the Vernier Accuracy by adding 4 dB to the Source Vernier

ManualsPlus.com

setting and subtracting the result from the Measured Power Level for each Source Amplitude Setting in Table 2-93.

Vernier Accuracy = Measured Power Level (dB) – (Source Vernier Setting (dB) + 4 dB)

9. Record the vernier accuracy values from Table 2-93 as test record entries (TR entries) 2 through 9 in the performance test record.
10. Copy the Absolute Vernier Accuracy values from Table 2-93 into columns 2 and 3 of Table 2-94 on page 342, as indicated by the TR entry numbers.
11. Calculate the Incremental Vernier Accuracy for each Source Vernier Setting by subtracting the Absolute Vernier Accuracy value in Column 3 of Table 2-94 from the Absolute Vernier Accuracy value in Column 2. Record the result in Column 4 of Table 2-94 and in the Performance Test Record as indicated by the TR entry number.

    Example:

    If the Absolute Vernier Accuracy for the –7 dB vernier setting is 0.23 dB (TR entry 6) and the Absolute Vernier Accuracy for the –8 dB vernier setting is 0.08 dB (TR entry 7), the Incremental Vernier Accuracy for the –8 dB vernier setting would be –0.15 dB (–0.15 = 0.08 – 0.23).

Table 2-94 Incremental Vernier Accuracy Worksheet

Column 1	Column 2	Column 3	Column 4
Source Vernier Setting (dB)	**Absolute Vernier Accuracy (dB)**	**Absolute Vernier Accuracy (dB)**	**Incremental Vernier Accuracy (dB)**
–2	**2)**	**3)**	**10)**
–3	**3)**	0.0	**11)**
–4	0.0 (Ref)	0.0 (Ref)	0.0 (Ref)
–5	**4)**	0.0	**12)**
–6	**5)**	**4)**	**13)**
–7	**6)**	**5)**	**14)**
–8	**7)**	**6)**	**15)**
–9	**8)**	**7)**	**16)**
–10	**9)**	**8)**	**17)**

12. Press **System, Alignments, Auto Align, All**.

ManualsPlus.com

43. Tracking Generator Level Flatness: Agilent E4401B and E4411B (Option 1DN or 1DQ)

This test verifies that analyzers with the tracking generator option (1DN or 1DQ) meet their tracking generator level flatness specification. A calibrated power sensor is connected to the tracking generator output to measure the power level at 50 MHz. The power meter is set for dB relative mode so that future power level readings are in dB, relative to the power level at 50 MHz.

Next, the tracking generator is stepped to several frequencies throughout its range, and the output power difference relative to the power level at 50 MHz is measured for each frequency recorded.

For frequencies below 100 kHz, a digital voltmeter and precision 50 Ω termination are used to measure the power of the tracking generator output. The DVM is set to read out in dBm using the MATH function with R value set to 50 Ω. The following equation is used to calculate dBm:

$$\text{dBm} = 10 \log_{10}((E^2/R)/1\text{mW})$$

The DVM readout is corrected by making the readings relative to the 100 kHz reading from the power sensor.

Option 1DN, 50 Ω tracking generators are tested from 9 kHz to 1500 MHz.

Option 1DQ, 75 Ω tracking generators are tested from 1 MHz to 1500 MHz.

The related adjustments for this procedure are “Tracking Generator ALC Calibration” and “Tracking Generator Frequency Slope.”

Equipment Required

Power meter
Power sensor, 50 Ω, 100 kHz to 1.5 GHz
Digital multimeter
Termination, 50 Ω
Cable, BNC
Adapter, Type-N tee, (m) (f) (f)
Adapter, Type-N (m) to BNC (f)
Adapter, BNC (f) to dual banana plug

ManualsPlus.com

Additional Equipment for Option 1DQ

Power sensor, 75 Ω, 1 MHz to 1.5 GHz
Adapter, Type-N (f) to BNC (m), 75 Ω

CAUTION Use only 75 Ω cables, connectors, or adapters on the 75 Ω input of an Option 1DQ or damage to the input connector will occur.

Procedure

Tracking Generator Level Flatness, Center Frequency ≥100 kHz

1. Press **Preset** on the analyzer. Press the **Factory Preset** softkey, if it is displayed.
2. Set the analyzer by pressing the following keys:

   FREQUENCY, **50 MHz**
   FREQUENCY, **CF Step**, **150 MHz**
   SPAN, **Zero Span**
   Source, **Amplitude On**, **0 dBm** (*Option 1DN*)
   Source, **Amplitude On**, **42.76 dBmV** (*Option 1DQ*)
   Single

3. Zero and calibrate the power meter with the power sensor in log mode (power reads out in dBm), as described in the power meter operation manual.

   Option 1DQ: Use a 75 Ω power sensor.

4. Connect the power sensor to the RF Out on the analyzer. See Figure 2-61.

Figure 2-61 Tracking Generator Level Flatness Test Setup, ≥100 kHz

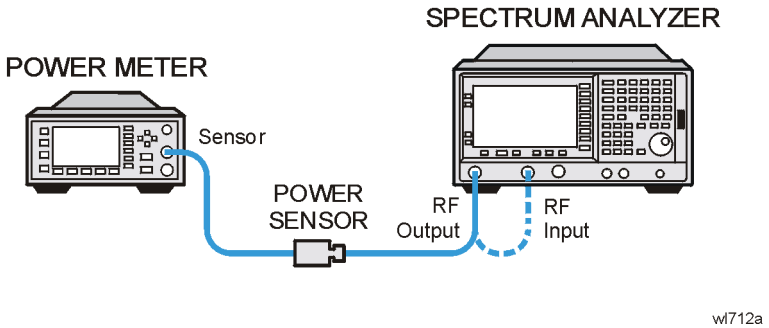

5. Set the power meter to relative mode, as described in the power meter operation manual. Power levels now read out in power level

ManualsPlus.com

relative to the power level at 50 MHz.

Perform the next four steps for each measurement value in Table 2-95.

1. Set the center frequency of the analyzer according to the values in Table 2-95. For 100 kHz, press **FREQUENCY**, **100 kHz**.
   The **step up key** (⇑) may be used to tune to center frequencies above 100 MHz.

   Option 1DQ: Start at 1 MHz by pressing **FREQUENCY, 1 MHz**.
2. Press **Single** on the analyzer.
3. Enter the appropriate power sensor Cal Factor into the power meter as indicated in Table 2-95.
4. Record the power level displayed on the power meter in the Level Flatness column in Table 2-95.

Table 2-95 Tracking Generator Level Flatness Worksheet, ≥100 kHz

Center Frequency	Level Flatness (dB)	Cal Factor (MHz)
100 kHz[a]		0.1
300 kHz[a]		0.3
500 kHz[a]		0.3
1 MHz		1
2 MHz		3
5 MHz		3
10 MHz		10
20 MHz		30
40 MHz		50
50 MHz	0 (Ref)	50
80 MHz		100
100 MHz		100
250 MHz		300
400 MHz		300
550 MHz		300
700 MHz		1000
850 MHz		1000

ManualsPlus.com

Table 2-95 Tracking Generator Level Flatness Worksheet, ≥100 kHz

Center Frequency	Level Flatness (dB)	Cal Factor (MHz)
1000 MHz		1000
1150 MHz		1000
1300 MHz		1000
1450 MHz		1000
1500 MHz		2000

a. These frequencies do not apply to analyzers with Option 1DQ Tracking Generators (75 Ω RF Output).

5. Disconnect the power sensor from the RF Out on the analyzer.

ManualsPlus.com

Tracking Generator Level Flatness, Center Frequency ≤100 kHz

NOTE Perform step 1 to step 7 for 50 Ω tracking generators only (*Option 1DN*).

1. Set up the digital multimeter as follows.

Parameter	Setting
AC/DC	AC Volts
Impedance & Units:	
Set to 50 Ω impedance	SMATH 10[a]
Set to dBm	MATH 5[a]
Set to Synchronous	SETACV 3[a]
Sub-sampled mode	

a. To set the Agilent 3458A multimeter functions from the front panel, press the blue shift key, then Recall State (T) key. Use the ⇑ (up) and ⇓ (down) arrows to select the appropriate function, then enter the value from the numeric keypad and press enter.

NOTE Perform step 2 to step 7 for each measurement value in Table 2-97.

2. Refer to Figure 2-62 to set up the equipment.

Figure 2-62 Tracking Generator Level Flatness Test Setup, ≤100 kHz

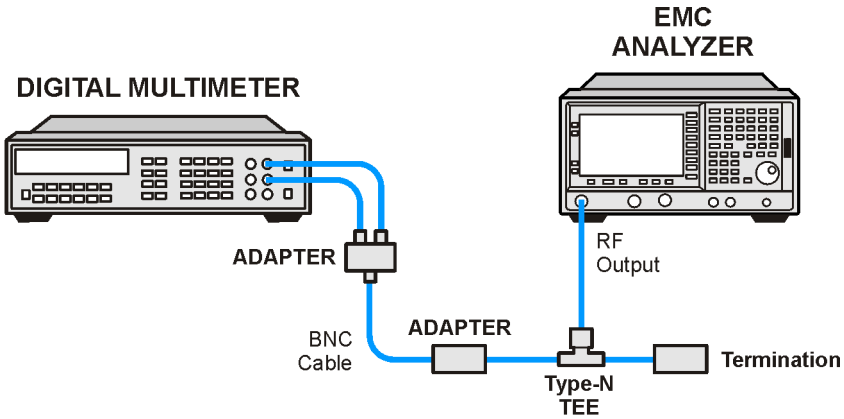

wb939a

3. To set the analyzer center frequency to 9 kHz, press **FREQUENCY**, **9 kHz** (or as indicated in Table 2-96).

ManualsPlus.com

4. Press **Single**.
5. Record the DVM readout in Table 2-96.
6. Subtract the 100 kHz Level Flatness readout in Table 2-95 from the 100 kHz DVM Readout in Table 2-96 and record as the DVM Offset at 100 kHz.

   DVM Offset at 100 kHz _____ dB

   For example, if the Level Flatness reading from Table 2-95 is 0.7 dB and the DVM Readout from Table 2-96 is –0.53 dBm, the DVM offset would be –1.23 dB.

   DVM Offset = DVM Readout – Level Flatness

7. Add the DVM Offset at 100 kHz from step 6, above, to each of the DVM Readouts in Table 2-96 and record as the Corrected Level Flatness in Column 3.

   For example, if the DVM Readout from Table 2-96 is 0.22 dBm, and the DVM Offset is –1.23 dB, the Corrected Level Flatness would be –1.01 dB.

   Corrected Level Flatness = DVM + DVM Offset

Table 2-96 Tracking Generator Level Flatness Worksheet, ≤100 kHz

Center Frequency	DVM Readout (dBm)	Corrected Level Flatness (dB)
9 kHz		
20 kHz		
40 kHz		
60 kHz		
80 kHz		
100 kHz		

8. For 50 Ω tracking generators only, locate the most positive Level Flatness reading in Table 2-95 and Table 2-96 for frequencies <1 MHz and enter this value as Test Record entry 1 of the performance verification test record.
9. For 50 Ω tracking generators only, locate the most negative Level Flatness reading in Table 2-95 and Table 2-96 for frequencies <1 MHz and enter this value as Test Record entry 2 of the

ManualsPlus.com

performance verification test record.

10. Locate the most positive Level Flatness reading in Table 2-95 and Table 2-96 for frequencies ≥1 MHz and ≤10 MHz and enter this value as Test Record entry 3 of the performance verification test record.

11. Locate the most negative Level Flatness reading in Table 2-95 and Table 2-96 for frequencies ≥1 MHz and ≤10 MHz and enter this value as Test Record entry 4 of the performance verification test record.

12. Locate the most positive Level Flatness reading in Table 2-95 for frequencies ≥10 MHz and ≤1.5 GHz and enter this value as Test Record entry 5 of the performance verification test record.

13. Locate the most negative Level Flatness reading in Table 2-95 for frequencies ≥10 MHz and ≤1.5 GHz and enter this value as Test Record entry 6 of the performance verification test record.

ManualsPlus.com

44. Tracking Generator Level Flatness: Agilent E4402B, E4403B, E4404B, E4405B, E4407B, and E4408B (Option 1DN)

This test verifies that analyzers with the tracking generator option 1DN meet their tracking generator level flatness specification. In this test, a calibrated power sensor is connected to the tracking generator output to measure the power level at 50 MHz. The power meter is set for dB Relative mode so that future power level readings are in dB, relative to the power level at 50 MHz.

Next, the tracking generator is stepped to several frequencies throughout its range, and the output power difference relative to the power level at 50 MHz is measured for each frequency recorded.

For frequencies below 100 kHz, a digital voltmeter and precision 50 Ω termination are used to measure the power of the tracking generator output. The DVM is set to read out in dBm using the MATH function with R value set to 50 Ω. The following equation is used to calculate dBm:

$$\text{dBm} = 10 \log_{10}((E^2/R)/1\text{mW})$$

The DVM readout is corrected by making the readings relative to the 100 kHz reading from the power sensor.

- *Option 1DN, 50 Ω tracking generators are tested from 9 kHz to 3000 MHz.*

The related adjustment for this performance test is the front panel **Align Now**, **TG (Ext Cable)** under the **System**, **Alignments** menu.

Equipment Required

Power meter
Power sensor, 50 Ω
Digital multimeter
Termination, 50 Ω
Cable, BNC
Cable, Type-N (m) (m)
Adapter, Type-N tee, (m) (f) (f)
Adapter, Type-N (m) to BNC (f)
Adapter, BNC (f) to dual banana plug

Procedure

ManualsPlus.com

Tracking Generator Level Flatness, Center Frequency ≥100 kHz

1. Press **Preset** on the analyzer. Press the **Factory Preset** softkey, if it is displayed.
2. Connect the Type-N cable between the RF Input and the tracking generator RF OUT, as shown in Figure 2-63. Do not connect the power sensor to the analyzer yet.

Figure 2-63 Tracking Generator Level Flatness Test Setup ≥100 kHz

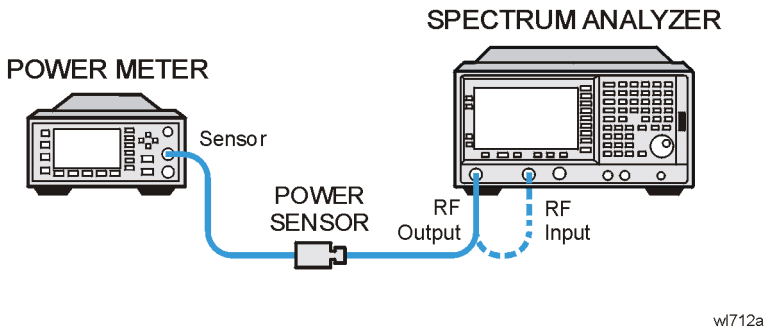

3. Set the analyzer by pressing the following keys:

   FREQUENCY, **50 MHz**
   FREQUENCY, **CF Step**, **150 MHz**
   SPAN, **Zero Span**
   System, Alignments, Auto Align, Off
   Marker
   Source, **Amplitude** (On),
   Source, **More**, **Tracking Peak** (*Wait for the* `Peaking` *message to disappear.*)
   Source, **Amplitude**, **–20 dBm**
   Single

4. Disconnect the Type-N cable.
5. Zero and calibrate the power meter with the power sensor in log mode (power reads out in dBm), as described in the power meter operation manual.
6. Connect the 50 Ω power sensor to the RF OUT 50 Ω on the analyzer. See Figure 2-63.
7. Set the power meter to relative mode, as described in the power meter operation manual. Power levels now read out in power level relative to the power level at 50 MHz.

Perform the next four steps for each measurement value in Table 2-97.

8. Set the center frequency of the analyzer according to the values in

ManualsPlus.com

Table 2-97. For 100 kHz, press **FREQUENCY**, **100 kHz**. The ⇑ (step up key) may be used to tune to most center frequencies above 100 MHz.

9. Press **Single** on the analyzer.

10. Enter the appropriate power sensor Cal Factor into the power meter as indicated in Table 2-97.

11. Record the power level displayed on the power meter in the Level Flatness column in Table 2-97.

Table 2-97 Tracking Generator Level Flatness Worksheet, ≥100 kHz

Center Frequency	Level Flatness (dB)	Cal Factor (MHz)
100 kHz		0.1
300 kHz		0.3
500 kHz		0.3
1 MHz		1
2 MHz		3
5 MHz		3
10 MHz		10
20 MHz		30
40 MHz		50
50 MHz	0 (Ref)	50
80 MHz		100
100 MHz		100
250 MHz		300
400 MHz		300
550 MHz		300
700 MHz		1000
850 MHz		1000
1000 MHz		1000
1150 MHz		1000
1300 MHz		1000
1450 MHz		1000
1600 MHz		2000
1750 MHz		2000

ManualsPlus.com

Table 2-97 Tracking Generator Level Flatness Worksheet, ≥100 kHz

Center Frequency	Level Flatness (dB)	Cal Factor (MHz)
1900 MHz		2000
2050 MHz		2000
2200 MHz		2000
2350 MHz		2000
2500 MHz		3000
2650 MHz		3000
2800 MHz		3000
2950 MHz		3000
3000 MHz		3000

12. See Figure 2-63. Disconnect the power sensor from the RF Out 50 Ω on the analyzer.

Tracking Generator Level Flatness, Center Frequency ≤100 kHz

1. Refer to Figure 2-64 to set up the equipment.

Figure 2-64 Tracking Generator Level Flatness Test Setup, ≤100 kHz

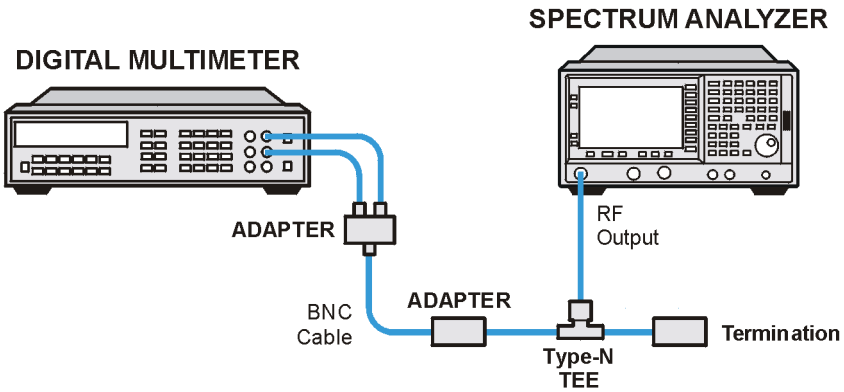

wl714a

Set up the digital multimeter as follows.

Parameter	Setting
AC/DC	AC Volts
Impedance & Units:	

ManualsPlus.com

Parameter	Setting
Set to 50 Ω impedance	SMATH 10[a]
Set to dBm	MATH 5[a]
Set to Synchronous	SETACV 3[a]
Sub-sampled mode	

a. To set the Agilent 3458A multimeter functions from the front panel, press the blue shift key, then Recall State (T) key. Use the ⇑ (up) and ⇓ (down) arrows to select the appropriate function, then enter the value from the numeric keypad and press enter.

2. Set the analyzer resolution bandwidth to 10 kHz by pressing **BW/Avg**, **Res BW**, **10 kHz**.

   Repeat step 3 through step 7 for each Center Frequency value in Table 2-98.

3. Set the analyzer center frequency to 9 kHz, by pressing **FREQUENCY**, **9 kHz**.

4. Press **Single**.

5. Record the DVM readout in Table 2-98.

6. Subtract the 100 kHz Level Flatness readout in Table 2-97 from the 100 kHz DVM Readout in Table 2-98 and record as the DVM Offset at 100 kHz.

   DVM Offset at 100 kHz _____ dB

   For example, if the Level Flatness reading from Table 2-97 is 0.7 dB and the DVM Readout from Table 2-98 is –0.53 dBm, the DVM offset would be –1.23 dB.

   DVM Offset= DVM Readout – Level Flatness

7. Add the DVM Offset at 100 kHz from step 6, above, to each of the DVM Readouts in Table 2-98 and record as the Corrected Level Flatness in Column 3.

   For example, if the DVM Readout from Table 2-98 is 0.22 dBm, and the DVM Offset is –1.23 dB, the Corrected Level Flatness would be –1.01 dB.

   Corrected Level Flatness= DVM Readout + DVM Offset

8. Press **System, Alignments, Auto Align, All.**

ManualsPlus.com

Table 2-98 Tracking Generator Level Flatness Worksheet, 100 kHz

Center Frequency	DVM Readout (dBm)	Corrected Level Flatness (dB)
9 kHz		
20 kHz		
40 kHz		
60 kHz		
80 kHz		
100 kHz		

1. Locate the most positive Level Flatness reading in Table 2-97 and Table 2-98 for frequencies <1 MHz and enter this value as Test Record entry 1 of the performance verification test record.
2. Locate the most negative Level Flatness reading in Table 2-97 and Table 2-98 for frequencies <1 MHz and enter this value as Test Record entry 2 of the performance verification test record.
3. Locate the most positive Level Flatness reading in Table 2-97 and Table 2-98 for frequencies ≥1 MHz and ≤10 MHz and enter this value as Test Record entry 3 of the performance verification test record.
4. Locate the most negative Level Flatness reading in Table 2-97 and Table 2-98 for frequencies ≥1 MHz and ≤10 MHz and enter this value as Test Record entry 4 of the performance verification test record.
5. Locate the most positive Level Flatness reading in Table 2-97 for frequencies ≥10 MHz and ≤1.5 GHz and enter this value as Test Record entry 5 of the performance verification test record.
6. Locate the most negative Level Flatness reading in Table 2-97 for frequencies ≥10 MHz and ≤1.5 GHz and enter this value as Test Record entry 6 of the performance verification test record.
7. Locate the most positive Level Flatness reading in Table 2-97 for frequencies >1.5 GHz and enter this value as Test Record entry 7 of the performance verification test record.
8. Locate the most negative Level Flatness reading in Table 2-97 for frequencies >1.5 GHz and enter this value as Test Record entry 8 of the performance verification test record.

ManualsPlus.com

45. Tracking Generator Harmonic Spurious Outputs: Agilent E4401B and E4411B (Option 1DN or 1DQ)

The measurement for tracking generator harmonic spurious outputs determines the maximum level of tracking generator harmonics. The tracking generator output is connected to the input of a microwave analyzer, then tuned to several different frequencies as the amplitude of the second and third harmonics relative to the fundamental are measured at each frequency.

There are no related adjustment procedures for this performance test.

Equipment Required

Microwave analyzer
Cable, Type-N, 62 cm (24 in)
Cable, BNC to BNC, 23 cm (9 in)
Adapter, Type-N (m) to BNC (f)

Additional Equipment Required for Option 1DQ

50 Ω to 75 Ω Minimum loss pad
Adapter, Type-N (f) to BNC (m), 75 Ω

Procedure

CAUTION Use only 75 Ω cables, connectors, or adapters on instruments with 75 Ω connectors or damage to the connectors will occur.

NOTE The following steps are for an Agilent 8563E microwave analyzer, the steps may be different if you are using another microwave analyzer.

1. Connect the 10 MHz reference output from the microwave analyzer to the 10 MHz reference input of the analyzer as shown in Figure 2-65.

ManualsPlus.com

Figure 2-65 Harmonic Spurious Outputs Test Setup

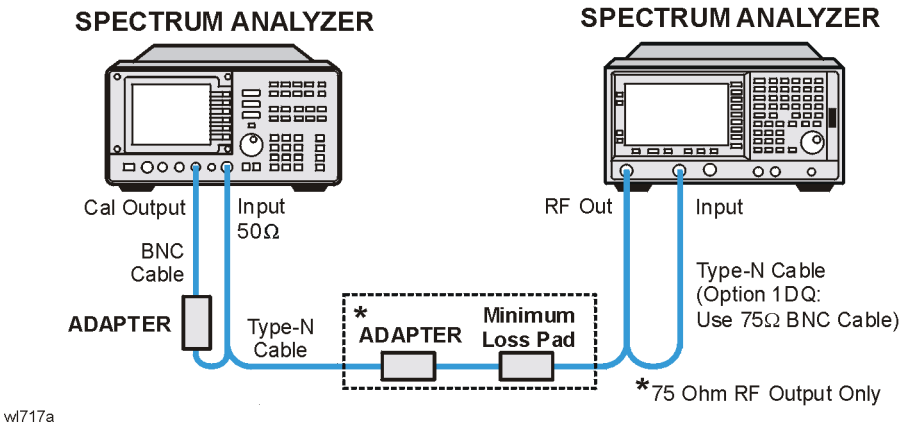

2. *Complete this step only if more than 24 hours have elapsed since performing a front-panel calibration of the microwave analyzer.*

   The microwave analyzer should be allowed to warm up for at least 5 minutes before proceeding.

   Complete a front-panel calibration of the microwave analyzer by performing the following steps:

   a. Preset the microwave analyzer.

   b. Connect a BNC cable between CAL OUTPUT and 50 Ω Input.

   c. Press **CAL**, **REALIGN LO & IF**.

   d. Set **FREQUENCY**, **300 MHz**.

   e. Set **SPAN**, **20 MHz**.

   f. Set **AMPLITUDE**, **–10 dBm**.

   g. Press **PEAK SEARCH**.

   h. Press **CAL**, **REF LVL ADJ** and use the ⇑ ⇓ arrows to adjust the DAC value to a marker amplitude reading of –10 dBm. Press **STORE REF LVL**.

   i. Disconnect the BNC cable from between the CAL OUTPUT and 50 Ω Input.

3. Press **Preset** on the analyzer under test. Press the **Factory Preset** softkey, if it is displayed.

4. Set the analyzer by pressing the following keys:

   FREQUENCY, **10 MHz**
   SPAN, **Zero Span**
   BW/Avg, **10 kHz**
   Source, **Amplitude (On)**

ManualsPlus.com

Source, **Amplitude** (On), **0 dBm** (*Option 1DN*)
Source, **Amplitude** (On), **42.76 dBmV** (Option 1DQ)
Single

5. Set the microwave analyzer controls as follows:

   FREQUENCY, **10 MHz**
   FREQUENCY, CF STEP, **10 MHz**
   SPAN, 10 kHz
   AMPLITUDE, 5 dBm (*Option 1DN*)
   AMPLITUDE, 0 dBm (*Option 1DQ*)
   BW, 1 kHz

6. Refer to Figure 2-65 to connect the Type-N cable from the spectrum analyzer RF OUT to the input of the microwave analyzer.

NOTE The following steps are for an Agilent 8563E microwave analyzer, the steps may be different if you are using another microwave analyzer.

Perform step 7 and step 8 for each measurement value in Table 2-99.

7. Set the analyzer center frequency to the next frequency listed in Table 2-99. Similarly, set the microwave analyzer frequency and step size to match the analyzer center frequency. Press **Single** on the analyzer.

8. On the microwave analyzer:

   a. Press **MKR**, **SIG TRK** (On). Wait for the signal to be displayed at center screen.

   b. Press **PEAK SEARCH**, **MKR**, **SIG TRK** (Off), **MARKER DELTA**.

   c. Press **FREQUENCY** and ⇑ (step-up key) to tune to the second harmonic.

   d. Press **PEAK SEARCH** and record the marker amplitude reading in Table 2-99 as the 2nd Harmonic Level for the appropriate Tracking Generator Output Frequency.

   e. Perform this step only if the Tracking Generator Output Frequency is ≤500 MHz. Press **FREQUENCY** and ⇑ (step-up key) to tune to the third harmonic. Press **PEAK SEARCH**.

      Record the marker amplitude reading in Table 2-99 as the 3rd Harmonic Level for the appropriate Tracking Generator Output Frequency.

ManualsPlus.com

f. Press **MKR**, **MARKERS** (Off).

Table 2-99 Tracking Generator Harmonic Spurious Response Worksheet

1.5 GHz Tracking Generator Output Frequency	2nd Harmonic Level (dBc)	3rd Harmonic Level (dBc)
10 MHz		
100 MHz		
300 MHz		
750 MHz		N/A

9. From Table 2-99, enter the 2nd Harmonic Level at 10 MHz as Test Record entry 1 and copy this value into the performance verification test record.
   - Test Record entry 1:
     TG 2nd Harmonic Spurious Output _____ dB
10. From Table 2-99, locate the most positive 2nd Harmonic Level for tracking generator frequencies of 100 MHz to 750 MHz and record this value as Test Record entry 2 and copy this value into the performance verification test record.
   - Test Record entry 2:
     TG 2nd Harmonic Spurious Output _____ dB
11. From Table 2-99, enter the 3rd Harmonic Level at 10 MHz as Test Record entry 3 and copy this value into the performance verification test record.
   - Test Record entry 3:
     TG 3rd Harmonic Spurious Output _____ dB
12. From Table 2-99, locate the most positive 3rd Harmonic Level for tracking generator frequencies of 100 MHz to 750 MHz and record this value as Test Record entry 4 and copy this value into the performance verification test record.
   - Test Record entry 4:
     TG 3rd Harmonic Spurious Output _____ dB

ManualsPlus.com

46. Tracking Generator Harmonic Spurious Outputs: Agilent E4402B, E4403B, E4404B, E4405B, E4407B, and E4408B (Option 1DN)

The measurement for tracking generator harmonic spurious outputs determines the maximum level of tracking generator harmonics. The tracking generator output is connected to the input of a microwave analyzer, then tuned to several different frequencies as the amplitude of the second and third harmonics (relative to the fundamental) are measured at each frequency.

There are no related adjustment procedures for this performance test.

Equipment Required

Microwave analyzer
Cable, Type-N, 62 cm (24 in)
Cable, BNC to BNC, 23 cm (9 in)
Adapter, Type-N (m) to BNC (f)

Procedure

NOTE The following steps are for an Agilent 8563E microwave analyzer, the steps may be different if you are using another microwave analyzer.

1. Use the Type-N cable to connect the RF INPUT to the tracking generator RF OUT as shown in Figure 2-66. Do not connect the Type-N cable to the microwave analyzer yet. Connect the 10 MHz Reference from the output of the microwave analyzer to the 10 MHz Reference Input of the analyzer being tested.

ManualsPlus.com

Figure 2-66 Harmonic Spurious Outputs Test Setup

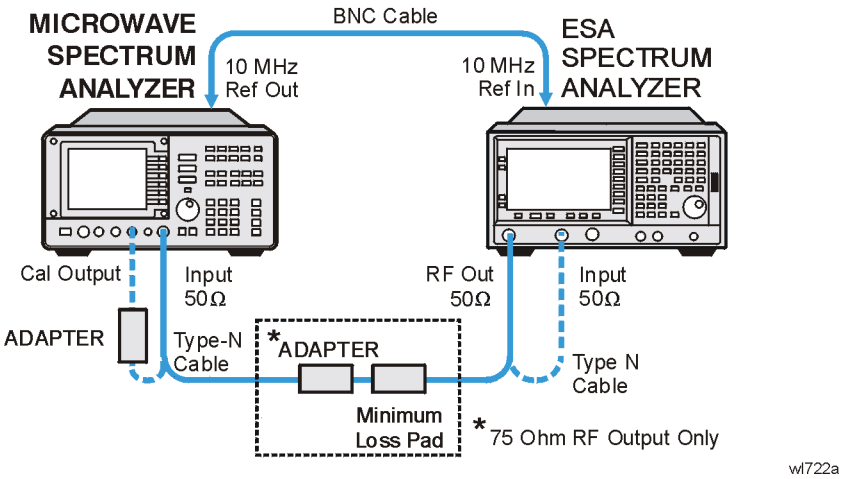

NOTE *Complete this step only if more than 24 hours have elapsed since performing a front-panel calibration of the microwave analyzer.*

The microwave analyzer should be allowed to warm up for at least 5 minutes before proceeding.

Complete a front-panel calibration of the microwave analyzer by performing the following steps:

a. Preset the microwave analyzer.

b. Connect a BNC cable between CAL OUTPUT and 50 Ω Input.

c. Press **CAL**, **REALIGN LO & IF**.

d. Set **FREQUENCY**, **300 MHz**.

e. Set **SPAN**, **20 MHz**.

f. Set **AMPLITUDE**, **–10 dBm**.

g. Press **PEAK SEARCH**.

h. Press **CAL**, **REF LVL ADJ** and use the ⇑ ⇓ arrows to adjust the DAC value to a marker amplitude reading of –10 dBm. Press **STORE REF LVL**.

i. Disconnect the BNC cable from between the CAL OUTPUT and 50 Ω Input.

2. Press **Preset** on the analyzer. Press the **Factory Preset** softkey, if it is displayed.

3. Set the analyzer under test by pressing the following keys:

   FREQUENCY, **10 MHz**
   SPAN, **Zero Span**

ManualsPlus.com

BW/Avg, **10 kHz**
System, Alignments, Auto Align, Off
Marker
Source, **Amplitude** (On)
Source, **Tracking Peak** *(Wait for the* `Peaking` *message to appear.)*
Source, **Amplitude** (On), **–2 dBm**
Single

4. Set the microwave analyzer controls as follows:

   FREQUENCY, **9 kHz**
   FREQUENCY, **CF STEP**, **9 kHz**
   SPAN, 10 kHz
   AMPLITUDE, 5 dBm
   BW, 1 kHz

5. Disconnect the Type-N cable from between the analyzer RF INPUT and the tracking generator RF OUT. Refer to Figure 2-66 to connect the Type-N cable from the analyzer RF OUT to the input of the microwave analyzer.

NOTE The following steps are for an Agilent 8563E microwave analyzer, the steps may be different if you are using another microwave analyzer.

Perform step 6 and step 7 for each measurement value in Table 2-100.

6. Set the analyzer under test center frequency to the next frequency listed in Table 2-100. Similarly, set the microwave analyzer frequency and step size to match the analyzer under test center frequency. Press **Single** on the analyzer under test.

7. On the microwave analyzer:

   a. Press **MKR**, **SIG TRK** (On). Wait for the signal to be displayed at center screen.

   b. Press **PEAK SEARCH**, **MKR**, **SIG TRK** (Off), **MARKER DELTA**.

   c. Press **FREQUENCY** and ⇑ (step up key) to tune to the second harmonic.

   d. Press **PEAK SEARCH** and record the marker amplitude reading in Table 2-100 as the 2nd Harmonic Level for the appropriate Tracking Generator Output Frequency.

   e. Perform this step only if the Tracking Generator Output Frequency is ≤900 MHz. Press **FREQUENCY** and ⇑ (step up key) to tune to the third harmonic. Press **PEAK SEARCH**.

   Record the marker amplitude reading in Table 2-100 as the 3rd Harmonic Level for the appropriate Tracking Generator Output Frequency.

ManualsPlus.com

f. Press **MKR**, **MARKERS** (Off).

Table 2-100 Tracking Generator Harmonic Spurious Response Worksheet

1.5 GHz Tracking Generator Output Frequency	2nd Harmonic Level (dBc)	3rd Harmonic Level (dBc)
9 kHz		
25 kHz		
100 MHz		
300 MHz		
900 MHz		
1500 MHz		N/A

8. From Table 2-100, enter the 2nd Harmonic Level at 9 kHz as Test Record entry 1 and copy this value into the performance verification test record.
   - Test Record entry 1:
     TG 2nd Harmonic Spurious Output _____ dB
9. From Table 2-100, locate the most positive 2nd Harmonic Level for tracking generator frequencies of 9 kHz to 750 MHz and record this value as Test Record entry 2 and copy this value into the performance verification test record.
   - Test Record entry 2:
     TG 2nd Harmonic Spurious Output _____ dB
10. From Table 2-100, enter the 3rd Harmonic Level at 9 kHz as Test Record entry 3 and copy this value into the performance verification test record.
    - Test Record entry 3:
      TG 3rd Harmonic Spurious Output _____ dB
11. From Table 2-100, locate the most positive 3rd Harmonic Level for tracking generator frequencies of 25 kHz to 1500 MHz and record this value as Test Record entry 4 and copy this value into the performance verification test record.
    - Test Record entry 4:
      TG 3rd Harmonic Spurious Output _____ dB
12. Press **System, Alignments, Auto Align, All**.

ManualsPlus.com

47. Tracking Generator Non-Harmonic Spurious Outputs: Agilent E4401B and E4411B (Option 1DN or 1DQ)

This procedure determines the maximum level of the non-harmonic spurious outputs of the tracking generator. The tracking generator output is set to several different output frequencies. For each output frequency, several sweeps are taken on the microwave analyzer over different frequency spans and the highest displayed spurious response is measured in each span. Responses at the fundamental frequency of the tracking generator output or their harmonics are ignored. The amplitude of the highest spurious response is recorded.

There are no related adjustment procedures for this performance test.

Equipment Required

Microwave analyzer
Cable, Type-N, 62 cm (24 in)
Cable, BNC, 23 cm (9 in)
Adapter, Type-N (m) to BNC (f)

Additional Equipment for 75 Ω Input

Pad, minimum loss
Adapter, Type-N (f) to BNC (m), 75 Ω

Procedure

1. Connect the equipment as shown in Figure 2-67.

ManualsPlus.com

Figure 2-67 Non-Harmonic Spurious Outputs Test Setup

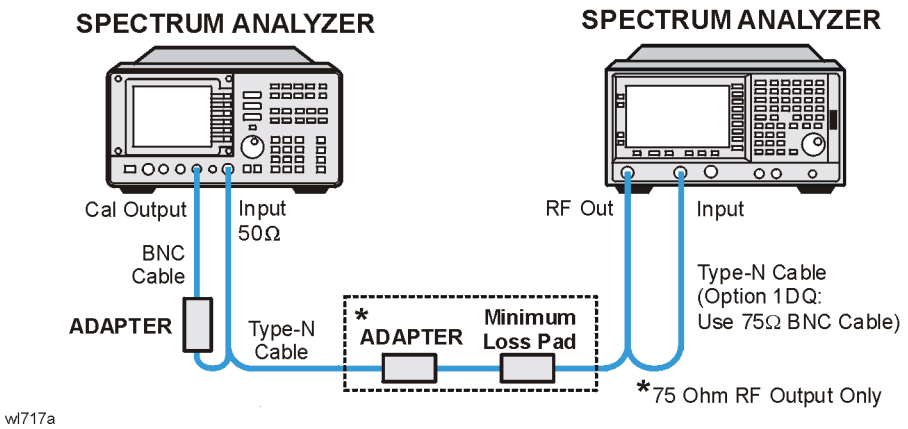

NOTE The following steps are for an Agilent 8563E microwave analyzer, the steps may be different if you are using another microwave analyzer.

1. *Complete this step only if more than two hours have elapsed since performing a front-panel calibration of the microwave analyzer.*

   The microwave analyzer should be allowed to warm up for at least 30 minutes before proceeding.

   Complete a front-panel calibration of the microwave analyzer by performing the following steps:

   a. Preset the microwave analyzer.

   b. Connect a BNC cable between CAL OUTPUT and 50 Ω Input.

   c. Press **CAL**, **REALIGN LO & IF**.

   d. Set **FREQUENCY**, **300 MHz**.

   e. Set **SPAN**, **20 MHz**.

   f. Set **AMPLITUDE**, **–10 dBm**.

   g. Press **PEAK SEARCH**.

   h. Press **CAL**, **REF LVL ADJ** and use the ⇑ ⇓ arrows to adjust the DAC value to a marker amplitude reading of –10 dBm. Press **STORE REF LVL**.

   i. Disconnect the BNC cable from between the CAL OUTPUT and 50 Ω Input.

2. Press **Preset** on the analyzer under test. Press the **Factory Preset** softkey, if it is displayed. Set the analyzer by pressing the following keys:

ManualsPlus.com

FREQUENCY, **50 MHz**
SPAN, **Zero Span**
BW/Avg, **30 kHz**
Marker
Source, **Amplitude On**, **0 dBm**
Source, **Amplitude On**, **42.76 dBmV** *(75 Ω Option only)*

3. Set the microwave analyzer by pressing the following keys:

- **SPAN**, **100 kHz**
- **AMPLITUDE**, **5 dBm**
- **AMPLITUDE**, **0 dBm** *(75 Ω Option only)*
- **AMPLITUDE**, ATTEN, 20 dB
- **AMPLITUDE**, **LOG dB/DIV**, **10 dB**

4. Disconnect the Type-N cable from between the analyzer RF INPUT and the tracking generator RF OUT. Refer to Figure 2-67 to connect the Type-N cable from the analyzer RF OUT to the microwave analyzer 50 Ω Input.

Measuring Fundamental Amplitudes

Perform the following two steps for each fundamental frequency in Table 2-101.

1. Set the analyzer under test center frequency to the fundamental frequency listed in Table 2-101 and press **Single** to activate a single sweep. Set the microwave analyzer to the same frequency.

2. On the microwave analyzer, press **PEAK SEARCH**. Press **MKR →**, **MARKER → REF LVL**. Wait for another sweep to finish. Press **PEAK SEARCH**. Record the marker amplitude reading in Table 2-101 as the Fundamental Amplitude.

Table 2-101 Tracking Generator Fundamental Response Worksheet

Fundamental Frequency	Fundamental Amplitude (dBm)
10 MHz	
750 MHz	
1.5 GHz	

Measuring Non-Harmonic Responses

1. On the analyzer under test, set the center frequency to the initial value indicated in the first row of Table 2-101. Press **Single** on the analyzer to trigger a single sweep.

2. Set the microwave analyzer Start Freq, Stop Freq, and Res BW as indicated in the first row of Table 2-102.

ManualsPlus.com

75 Ω outputs only: Measure only at start frequencies of 1 MHz and greater.

3. Press **SGL SWP** on the microwave analyzer to activate a single sweep and wait for the sweep to finish. Press **PEAK SEARCH** to locate the largest spurious response.
4. Verify that the marked signal is not the fundamental or a harmonic of the fundamental by performing the following steps:

NOTE The following steps are for an Agilent 8563E microwave analyzer, the steps may be different if you are using another microwave analyzer.

   a. Divide the marker frequency by the fundamental frequency (the analyzer center frequency setting). For example, if the marker frequency is 30.3 MHz and the fundamental frequency is 10 MHz, dividing 30.3 MHz by 10 MHz yields 3.03.
   b. Round the number calculated in step a to the nearest whole number. In the example above, 3.03 should be rounded to 3. Values less than 1 should be rounded up to 1.
   c. Multiply the fundamental frequency by the number calculated in step b. Following the example, multiplying 10 MHz by 3 yields 30 MHz.
   d. Calculate the difference between the marker frequency and the frequency calculated in step c above. Continuing the example, the difference would be 300 kHz.
   e. Due to span accuracy uncertainties in the microwave analyzer, the marker frequency might not equal the actual frequency. Given the marker frequency, check if the difference calculated in step d is within the appropriate tolerance:

      For marker frequencies <5 MHz, tolerance = ±200 kHz
      For marker frequencies <55 MHz, tolerance = ±750 kHz
      For marker frequencies >55 MHz, tolerance = ±10 MHz

   f. If the difference in step d is within the indicated tolerance, the signal in question is the fundamental signal (if the number in step b = 1) or a harmonic of the fundamental (if the number in step b >1). This response should be ignored.
5. Verify that the marked signal is a true response and not a random noise peak by pressing **SINGLE** to trigger a new sweep and press **PEAK SEARCH**. A true response will remain at the same frequency and amplitude on successive sweeps but a noise peak will not.

   If the marked signal is not the fundamental or a harmonic of the fundamental and is a true response, continue with step 7.
6. If the marked signal is either the fundamental or a harmonic of the fundamental or a noise peak, move the marker on the microwave

ManualsPlus.com

analyzer to the next highest signal by pressing **NEXT PEAK**. Repeat step 4 above.

Perform step 7 only if the marker signal is a true response and not a fundamental or harmonic of the fundamental. Otherwise, continue with step 8.

7. Calculate the difference between the amplitude of marked signal and the fundamental amplitude as listed in Table 2-101.

   For example, if the fundamental amplitude for a fundamental frequency of 10 MHz is 1.2 dBm and the marker amplitude is –40.8 dBm, the difference is –42 dBc.

   Record this difference as the non-harmonic response amplitude for the appropriate analyzer center frequency and microwave analyzer start and stop frequency settings in Table 2-102.

Non-harmonic Amplitude = Marker Amplitude – Fundamental Amplitude

8. If a true non-harmonic spurious response is not found, record "NOISE" as the Amplitude of Non-Harmonic Response in Table 2-102 for the appropriate analyzer center frequency and microwave analyzer start and stop frequency settings.

9. Repeat step 1 through step 8 for the remaining analyzer center frequency and microwave analyzer settings in Table 2-102.

Table 2-102 1.5 GHz Tracking Generator Non-Harmonic Spurious Response Worksheet

Analyzer Center Frequency	Microwave Analyzer Start Frequency	Microwave Analyzer Stop Frequency	Microwave Analyzer Resolution Bandwidth	Amplitude of Non-Harmonic Response (dBc)
10 MHz	9 kHz[a]	100 kHz[a]	300 Hz[a]	
10 MHz	100 kHz[b]	5 MHz	10 kHz	
10 MHz	5 MHz	55 MHz	100 kHz	
10 MHz	55 MHz	1240 MHz	1 MHz	
10 MHz	1240 MHz	1500 MHz	1 MHz	
750 MHz	9 kHz[a]	100 kHz[a]	300 Hz[a]	
750 MHz	100 kHz[b]	5 MHz	10 kHz	
750 MHz	5 MHz	55 MHz	100 kHz	
750 MHz	55 MHz	1240 MHz	1 MHz	
750 MHz	1240 MHz	1500 MHz	1 MHz	
1.5 GHz	9 kHz[a]	100 kHz[a]	300 Hz[a]	

ManualsPlus.com

Table 2-102 1.5 GHz Tracking Generator Non-Harmonic Spurious Response Worksheet

Analyzer Center Frequency	Microwave Analyzer Start Frequency	Microwave Analyzer Stop Frequency	Microwave Analyzer Resolution Bandwidth	Amplitude of Non-Harmonic Response (dBc)
1.5 GHz	100 kHz[b]	5 MHz	10 kHz	
1.5 GHz	5 MHz	55 MHz	100 kHz	
1.5 GHz	55 MHz	1240 MHz	1 MHz	
1.5 GHz	1240 MHz	1500 MHz	1 MHz	

a. 75 Ω RF Outputs: Omit this frequency range.
b. 75 Ω RF Outputs: Set the start frequency to 1 MHz.

Determining the Highest Non-harmonic Spurious Response

1. In Table 2-102, locate the most positive non-harmonic response amplitude. Record this amplitude as the highest non-harmonic response amplitude in Test Record entry 1 of the performance verification test record.

ManualsPlus.com

48. Tracking Generator Non-Harmonic Spurious Outputs: Agilent E4402B, E4403B, E4404B, E4405B, E4407B, and E4408B (Option 1DN)

This procedure determines the maximum level of the non-harmonic spurious outputs of the tracking generator. The tracking generator output is set to several different output frequencies. For each output frequency, several sweeps are taken on the microwave analyzer over different frequency spans and the highest displayed spurious response is measured in each span. Responses at the fundamental frequency of the tracking generator output or their harmonics are ignored. The amplitude of the highest spurious response is recorded.

There are no related adjustment procedures for this performance test.

Equipment Required

Microwave analyzer
Cable, Type-N, 62 cm (24 in)
Cable, BNC, 23 cm (9 in)
Adapter, Type-N (m) to BNC (f)

Procedure

1. Connect the equipment as shown in Figure 2-68.

Figure 2-68 Non-Harmonic Spurious Outputs Test Setup

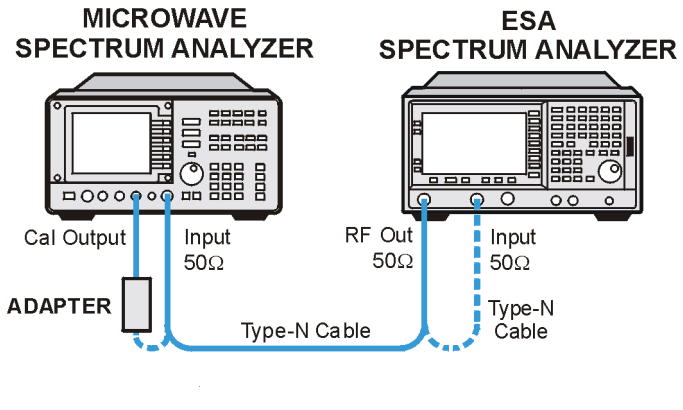

NOTE The following steps are for an Agilent 8563E microwave analyzer, the steps may be different if you are using another microwave analyzer.

ManualsPlus.com

1. *Complete this step only if more than two hours have elapsed since performing a front-panel calibration of the microwave analyzer.*

   The microwave analyzer should be allowed to warm up for at least 30 minutes before proceeding.

   Complete a front-panel calibration of the microwave analyzer by performing the following steps:

   a. Preset the microwave analyzer.

   b. Connect a BNC cable between CAL OUTPUT and 50 Ω Input.

   c. Press **CAL**, **REALIGN LO & IF**.

   d. Set **FREQUENCY**, **300 MHz**.

   e. Set **SPAN**, **20 MHz**.

   f. Set **AMPLITUDE**, **–10 dBm**.

   g. Press **PEAK SEARCH**.

   h. Press **CAL**, **REF LVL ADJ** and use the ⇑ ⇓ arrows to adjust the DAC value to a marker amplitude reading of –10 dBm. Press **STORE REF LVL**.

   i. Disconnect the BNC cable from between the CAL OUTPUT and 50 Ω Input.

2. Use the Type-N cable to connect the RF Input to the RF OUT of the tracking generator as shown in Figure 2-68. Do not connect to the RF Input of the microwave analyzer yet.

3. Press **Preset** on the analyzer under test. Press the **Factory Preset** softkey, if it is displayed. Set the analyzer by pressing the following keys:

   FREQUENCY, **50 MHz**
   SPAN, **Zero Span**
   BW/Avg, **30 kHz**
   System, Alignments, Auto Align, Off
   Marker
   Source, Tracking Peak (*wait for the* `Peaking` *message to appear*)
   Source, **Amplitude On**, **–2 dBm**
   Single

4. Set the microwave analyzer by pressing the following keys:

   - **SPAN**, **100 kHz**
   - **AMPLITUDE**, **5 dBm**
   - **AMPLITUDE**, **Attenuation**, **20 dB**
   - **AMPLITUDE**, **LOG dB/DIV**, **10 dB**

5. Disconnect the Type-N cable from between the analyzer RF INPUT and the tracking generator RF OUT. Refer to Figure 2-68 to connect the Type-N cable from the analyzer RF OUT to the microwave

ManualsPlus.com

analyzer 50 Ω Input.

Measuring Fundamental Amplitudes

Perform the following two steps for each measurement value in Table 2-103.

6. Set the analyzer center frequency to the Fundamental Frequency listed in Table 2-103 and press **Single** to activate a single sweep. Set the microwave analyzer to the same frequency.
7. On the microwave analyzer, press **PEAK SEARCH**. Press **MARKER →**, **MKR → REF LVL**. Wait for another sweep to finish. Press **PEAK SEARCH**. Record the marker amplitude reading in Table 2-103 as the fundamental amplitude.

Table 2-103 Tracking Generator Fundamental Response Worksheet

Fundamental Frequency	Fundamental Amplitude (dBm)
10 MHz	
1.5 GHz	
3.0 GHz	

Measuring Non-Harmonic Responses

8. On the analyzer, set the center frequency to the initial value indicated in the first row of Table 2-103. Press **Single** on the analyzer to trigger a single sweep.
9. Set the Start Freq, Stop Freq, and Res BW of the microwave analyzer as indicated in the first row of Table 2-104.
10. Press **SGL SWP** on the microwave analyzer to activate a single sweep and wait for the sweep to finish. Press **PEAK SEARCH** to locate the largest spurious response.
11. Verify that the marked signal is not the fundamental or a harmonic of the fundamental by performing the following steps:

NOTE The following steps are for an Agilent 8563E microwave analyzer, the steps may be different if you are using another microwave analyzer.

a. Divide the marker frequency by the fundamental frequency (the analyzer center frequency setting). For example, if the marker frequency is 30.3 MHz and the fundamental frequency is 10 MHz, dividing 30.3 MHz by 10 MHz yields 3.03.

b. Round the number calculated in step a to the nearest whole number. In the example above, 3.03 should be rounded to 3. Values less than 1 should be rounded up to 1.

ManualsPlus.com

c. Multiply the fundamental frequency by the number calculated in step b. Following the example, multiplying 10 MHz by 3 yields 30 MHz.

d. Calculate the difference between the marker frequency and the frequency calculated in step c above. Continuing the example, the difference would be 300 kHz.

e. Due to span accuracy uncertainties in the microwave analyzer, the marker frequency might not equal the actual frequency. Given the marker frequency, check if the difference calculated in step d is within the appropriate tolerance:

For marker frequencies <5 MHz, tolerance = ±200 kHz
For marker frequencies <55 MHz, tolerance = ±750 kHz
For marker frequencies >55 MHz, tolerance = ±10 MHz

f. If the difference in step d is within the indicated tolerance, the signal in question is the fundamental signal (if the number in step b = 1) or a harmonic of the fundamental (if the number in step b >1). This response should be ignored.

12. Verify that the marked signal is a true response and not a random noise peak by pressing **SINGLE** to trigger a new sweep and press **PEAK SEARCH**. A true response will remain at the same frequency and amplitude on successive sweeps but a noise peak will not.

If the marked signal is not the fundamental or a harmonic of the fundamental and is a true response, continue with step 14.

13. If the marked signal is either the fundamental or a harmonic of the fundamental or a noise peak, move the marker on the microwave analyzer to the next highest signal by pressing **NEXT PEAK**. Repeat step 11 above.

Perform step 14 only if the marker signal is a true response and not a fundamental or harmonic of the fundamental. Otherwise, continue with step 15.

14. Calculate the difference between the amplitude of marked signal and the fundamental amplitude as listed in Table 2-103.

For example, if the fundamental amplitude for a fundamental frequency of 10 MHz is 1.2 dBm and the marker amplitude is –40.8 dBm, the difference is –42 dBc.

Record this difference as the non-harmonic response amplitude for the appropriate analyzer center frequency and microwave analyzer start and stop frequency settings in Table 2-104.

Non-harmonic Amplitude = Marker Amplitude – Fundamental Amplitude

15. If a true non-harmonic spurious response is not found, record “NOISE” as the non-harmonic response Amplitude in Table 2-104 for the appropriate analyzer center frequency and microwave analyzer

ManualsPlus.com

start and stop frequency settings.

16. Repeat step 8 through step 15 for the remaining analyzer center frequency and microwave analyzer settings in Table 2-104.

17. Press **System, Alignments, Auto Align, All**

Table 2-104 3.0 GHz Tracking Generator Non-Harmonic Spurious Response Worksheet

Analyzer Center Frequency	Microwave Analyzer Start Frequency	Microwave Analyzer Stop Frequency	Microwave Analyzer Resolution Bandwidth	Amplitude of Non-Harmonic Response (dBc)
10 MHz	9 kHz	100 kHz	300 Hz	
10 MHz	100 kHz	5 MHz	10 kHz	
10 MHz	5 MHz	55 MHz	100 kHz	
10 MHz	55 MHz	1240 MHz	1 MHz	
10 MHz	1240 MHz	2000 MHz	1 MHz	
10 MHz	2000 MHz	3000 MHz	1 MHz	
1.5 GHz	9 kHz	100 kHz	300 Hz	
1.5 GHz	100 kHz	5 MHz	10 kHz	
1.5 GHz	5 MHz	55 MHz	100 kHz	
1.5 GHz	55 MHz	1240 MHz	1 MHz	
1.5 GHz	1240 MHz	2000 MHz	1 MHz	
1.5 GHz	2000 MHz	3000 MHz	1 MHz	
3.0 GHz	9 kHz	100 kHz	300 Hz	
3.0 GHz	100 kHz	5 MHz	10 kHz	
3.0 GHz	5 MHz	55 MHz	100 kHz	
3.0 GHz	55 MHz	1240 MHz	1 MHz	
3.0 GHz	1240 MHz	2000 MHz	1 MHz	
3.0 GHz	2000 MHz	3000 MHz	1 MHz	

Determining the Highest Non-harmonic Spurious Response

1. In Table 2-104, locate the most positive non-harmonic response amplitude for microwave analyzer stop frequency settings ≤2000 MHz. Record this amplitude as the highest non-harmonic response amplitude in Test Record entry 1 of the performance verification test record.

2. In Table 2-104, locate the most positive non-harmonic response

ManualsPlus.com

amplitude for microwave analyzer start frequency settings ≥2000 MHz. Record this amplitude as the highest non-harmonic response amplitude in Test Record entry 2 of the performance verification test record.

ManualsPlus.com

49. Tracking Generator LO Feedthrough: Agilent E4402B, E4403B, E4404B, E4405B, E4407B, and E4408B(Option 1DN)

The tracking generator output is connected to the analyzer 50 W Input, and the tracking is adjusted at 50 MHz for a maximum signal level. The tracking generator output is then connected to the input of a microwave analyzer. The tracking generator is tuned to several different frequencies and the LO Feedthrough is measured at the frequency extremes of the LO.

The related adjustment for this procedure is “TG LO Leveling.”

Equipment Required

Microwave analyzer
Cable, Type-N, 62 cm (24 in)
Cable, BNC, 23 cm (9 in)
Adapter, Type-N (m) to BNC (f)

Procedure

1. Connect the equipment as shown in Figure 2-69.

Figure 2-69 LO Feedthrough Amplitude Test Setup

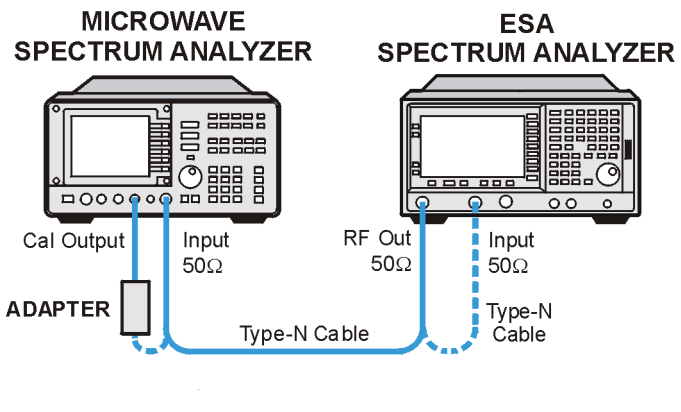

NOTE Note that the following steps are for an Agilent 8563E microwave analyzer, the steps may be different if you are using another microwave analyzer.

1. Press **PRESET** on the microwave analyzer.

   The microwave analyzer should be allowed to warm up for at least

ManualsPlus.com

five minutes before proceeding.

Complete step 2 only if more than 24 hours have elapsed since performing a front-panel calibration of the microwave analyzer.

2. Perform a front-panel calibration of the microwave analyzer by performing the following steps:
   a. Connect a BNC cable between CAL OUTPUT and 50 Ω Input.
   b. Press **CAL**, **REALIGN LO & IF**.
   c. Set **FREQUENCY**, **300 MHz**.
   d. Set **SPAN**, **20 MHz**.
   e. Set **AMPLITUDE**, **–10 dBm**.
   f. Press **PEAK SEARCH**.
   g. Press **CAL**, **REF LVL ADJ** and use the ⇑ ⇓ arrows to adjust the DAC value to a marker amplitude reading of –10 dBm. Press **STORE REF LVL**.
   h. Disconnect the BNC cable from between the CAL OUTPUT and 50 Ω Input.
3. Press **Preset** on the analyzer under test. Press the **Factory Preset** softkey, if it is displayed.
4. Use the type-N cable to connect the RF Input to the tracking generator RF OUT on the analyzer under test as shown in Figure 2-69. *Do not connect to the microwave analyzer RF Input yet.*
5. Initialize the test equipment by pressing the following keys on the analyzer under test:

   FREQUENCY, **50 MHz**
   SPAN, **Zero Span**
   BW / Avg, **30 kHz**
   System, Alignments, Auto Align, Off
   Marker
   Source, **Amplitude On**, **–5 dBm**
   Source, **Tracking Peak** (*Wait for the* `PEAKING SIGNAL` *message to disappear.*)
   FREQUENCY, **9 kHz**
   Source, **Amplitude On**, **–2 dBm**
   Single
6. On the microwave analyzer, press the following keys:

   FREQUENCY, **3.921409 GHz**
   SPAN, **100 kHz**
   AMPLITUDE, **0 dBm**
   BW, **1 kHz**
7. Disconnect the type-N cable from between the analyzer RF INPUT

ManualsPlus.com

and the Tracking Generator RF OUT. Refer to Figure 2-69 to connect the type-N cable from the analyzer RF OUT to the microwave analyzer 50 W Input.

8. On the microwave analyzer, press:

   PEAK SEARCH
   MKR, SIG TRK (On)

   Wait for the signal to be displayed at center screen, then press **SIG TRK** (Off).

9. On the microwave analyzer, press **AUX CTRL**, **INTERNAL MIXER**, **PRESEL AUTO PK** then wait for the `PEAKING` message to disappear.

10. Record the microwave analyzer marker amplitude in Table 2-105 as the LO Feedthrough Amplitude for the Microwave analyzer CENTER FREQUENCY at 3.921409 GHz.

11. Repeat step 8 through step 10 for the remaining Analyzer CENTER FREQUENCY and Microwave Analyzer CENTER FREQUENCY settings listed in Table 2-105. Press **Single** on the analyzer to activate a single sweep each time the center frequency is changed.

12. Press **System, Alignments, Auto Align, All**.

13. In Table 2-105, for analyzer center frequencies of 9 kHz to 1.5 GHz, locate the highest LO Feedthrough Amplitude then record this amplitude as Test Record entry 1 of the performance verification test record.

14. In Table 2-105, for the Analyzer Center Frequency of 3.0 GHz, record this LO Feedthrough Amplitude as Test Record entry 2 of the performance verification test record.

Table 2-105 Tracking Generator LO Feedthrough Amplitude Worksheet

Analyzer Center Frequency	Microwave Analyzer Center Frequency	LO Feedthrough Amplitude (dBm)
9 kHz	3.921409 GHz	
70 MHz	3.9914 GHz	
150 MHz	4.0714 GHz	
1.5 GHz	5.4214 GHz	
3.0 GHz	6.9214 GHz	

ManualsPlus.com

50. Gate Delay Accuracy and Gate Length Accuracy: Agilent E4401B, E4402B, E4404B, E4405B, and E4407B (Option 1D6)

The method used for measuring the gate length times is determined by the length of the gate. Shorter gate-length times are measured with an oscilloscope, and longer gate-length times are measured with a counter.

For shorter gate-length times, the output signal of a pulse generator is used to trigger the gate circuitry. To measure the gate delay, Δt markers are used. The oscilloscope pulse width measurement feature is used to measure the short gate-length.

For longer gate-length times, a universal counter is used to measure the time period from the rising edge of the gate output to its falling edge. Because the gate-length time is equivalent to the clock accuracy of the analyzer, the gate-length time is compared to the specification for clock accuracy.

There are no related adjustment procedures for this performance test.

Equipment Required

Universal counter
Function generator
Oscilloscope *(This procedure is written for the Agilent 54820A.)*
Cable, BNC, 120 cm (48 in) *(four required)*
Adapter, BNC tee (m) (f) (f) *(two required)*

Procedure

1. Connect the equipment as shown in Figure 2-70. Connect the GATE OUT to Channel 2.
2. Press **Preset** on the analyzer. Press the **Factory Preset** softkey, if it is displayed. Set the analyzer by pressing the following keys:

   SPAN, **Zero Span**
   Sweep, **Sweep Time**, **100 s**
   Sweep, **Gate** (On)
   Gate Setup, **Edge Setup** (or **Edge Gate**)
   Gate Delay, **1 µs**
   Gate Length, **1 µs**

NOTE The oscilloscope measurement is much more stable using slow sweep times on the analyzer. The response on the analyzer display will not be valid, but the Gate Delay and Gate Length accuracy are being measured externally with the universal counter and oscilloscope.

ManualsPlus.com

Figure 2-70 Gate Delay and Gate Length Test Setup

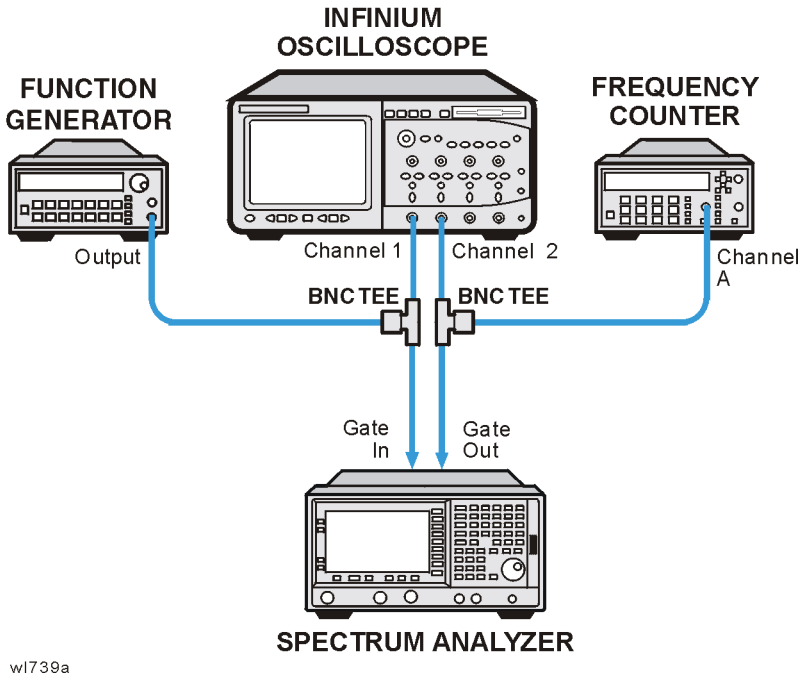

3. Set up the function generator as follows:

Waveform	Square
Frequency	100 Hz
Amplitude	2.5 V
Offset	1.25 V

4. Press **Default Setup** on the oscilloscope and set the controls as follows:

Timebase	500 ns/div
Trigger	Edge
Trigger Source	2
Trigger Level	2.0 V
Channel 1	
V/Div	1 V
Coupling	DC
Offset	2.0 V
Channel 2	
V/Div	1 V
Coupling	DC

ManualsPlus.com

Offset	3.0 V

5. On the oscilloscope, adjust the horizontal position to place the area between the rising edges of channel 1 and channel 2 at the center of the display. The horizontal position at the bottom of the grid should be between –500 ns and –650 ns.
6. Set the oscilloscope timebase to 200 ns/div. The rising edges of channel 1 and channel 2 should still be displayed. If not, adjust the horizontal position so the rising edges of channel 1 and channel 2 are displayed.
7. Use the mouse connected to the oscilloscope and click on the mouse icon in the upper right-hand corner of the display.
8. Set the oscilloscope statistics on.

   Click on **Measure** and verify that “Show Statistics” is checked.
9. Define the conditions for a delta time measurement on the oscilloscope.

   Leave the oscilloscope in Auto Trigger “Free Run” mode until all connections and setups are completed on both the oscilloscope and the analyzer. This allows you to confirm that both channels on the oscilloscope are receiving a valid signal.

   a. Click on **Measure**, **Customize**, **Measurement Definitions**.
   b. Set Threshold Definition to “10%, 50%, 90%”.
   c. Set Top-Base Definition to “Standard”.
   d. Set From Edge # to 1, and set To Edge # to 2.
   e. Set both Direction selections to “Rising”.
   f. Set both Threshold selections to “Middle Level”.
   g. Click **Close**.
10. Activate the delta time measurement.

    a. Click **Measure**, **Time**, **Delta Time**.
    b. Set Source 1 to “Channel 1”.
    c. Set Source 2 to “Channel 2”.
    d. Click **OK**.
11. Wait a few seconds for the minimum and maximum values displayed at the bottom of the oscilloscope grid to stabilize.
12. Refer to the measurement statistics at the bottom of the oscilloscope grid.

    Record the ΔTime (1)-(2) min value as Minimum Gate Delay in Table

ManualsPlus.com

2-106.

Record the ΔTime (1)-(2) max value as the Maximum Gate Delay in Table 2-106.

13. Clear all current oscilloscope measurements. Click on **Measure**, **Clear**, and **All Measurements**.

14. Adjust the oscilloscope horizontal position to center the pulse on Channel 2 on the display. Switching the trigger source to channel 2 will help with the measurement.

15. Activate the pulse width measurement function for channel 2 of the oscilloscope.

    Click on **Measure**, **Time**, and click on **+width**.

    Set the Source to be channel 2 and click **OK**.

16. Record the +width (2) mean value in Table 2-106 as the 1 µs Gate Length.

17. On the analyzer, press

    Sweep, **Sweep Time**
    150 ms, **Sweep**
    Gate Setup (or **Gate**), **Edge Setup** (or **Edge Gate**)
    Gate Delay, **10ms**
    Sweep, **Gate Setup**
    Edge Setup (or **Edge Gate**), **Gate Length**, **65 ms**

18. Set the universal counter controls as follows:

Function	Pos Width 1
Gate Time	0.1 s
Auto Trigger	On
Channel 1	
Coupling	DC
Impedance	1 MΩ
X10 Atten	Off
100 kHz Filter	Off
Common 1	On

19. Record the universal counter readout value as the 65ms Gate Length in Table 2-106.

ManualsPlus.com

Table 2-106 Gate Delay and Gate Length Accuracy Worksheet

Description	Value	Test Record Entry
Minimum Gate Delay		1)
Maximum Gate Delay		2)
1 µs Gate Length		3)
65 ms Gate Length		4)

ManualsPlus.com

51. Gate Mode Additional Amplitude Error: Agilent E4401B, E4402B, E4404B, E4405B, and E4407B (Option 1D6)

This procedure measures the additional amplitude error while gate mode is turned on. An amplitude reference is established while gate mode is off. Gate mode is then turned on with a function generator providing the gate trigger input. The amplitude with gate mode on is then measured using the marker delta function.

There are no related adjustment procedures for this performance test.

Equipment Required

Synthesized signal generator
Function generator
Cable, Type-N (f), 50 Ω
Cable, BNC, 120 cm

Additional Equipment for Option 1DP

Adapter, Type-N (f) to BNC (m), 75 Ω
Minimum loss pad

Additional Equipment for Option BAB

Adapter, Type-N (f) to APC 3.5 (f)

Procedure

1. Connect the equipment as shown in Figure 2-71.
2. Press **Preset** on the analyzer. Press the **Factory Preset** softkey, if it is displayed. Set the analyzer by pressing the following keys:

   FREQUENCY, **300 MHz**
   SPAN, Zero Span
   AMPLITUDE, **Ref Level**, **–20 dBm** (*50 Ω Inputs only*)
   AMPLITUDE, Ref Level, –10 dBm (*75 Ω Inputs only*)
   AMPLITUDE, **More**, **Y Axis Units** (or **Amptd Units**), **dBm**
   Sweep, 20 ms

ManualsPlus.com

Figure 2-71 Gate Delay and Gate Length Accuracy Test Setup

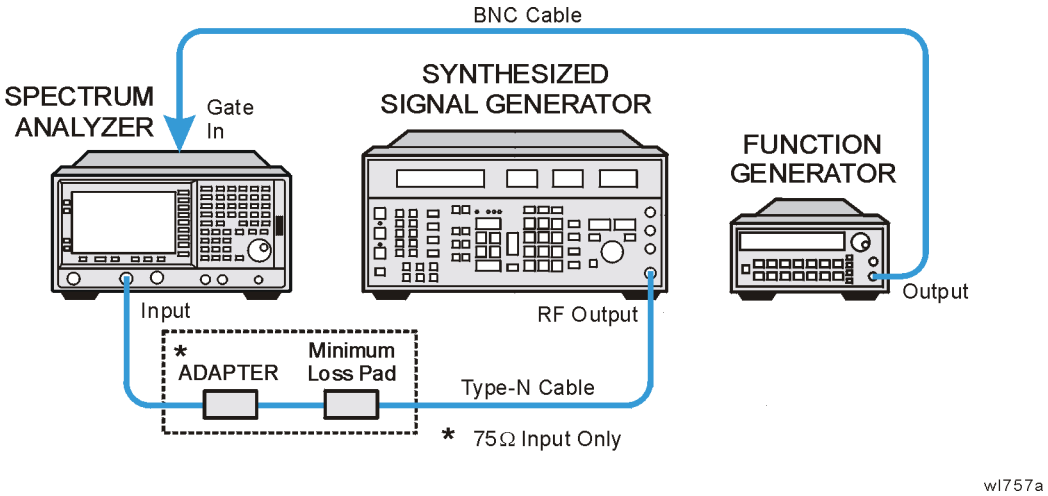

3. Set up the function generator as follows:

Waveform	Square
Duty Cycle	50%
Frequency	100 Hz
Amplitude	2.5 V pk-pk
Offset	1.25V

4. On the synthesized signal generator, press **Blue Key, Special, 0, 0.** Set the signal generator as follows:

FREQUENCY	300 MHz
AMPLITUDE	–20 dBm (*50 Ω Inputs only*)
AMPLITUDE	–10 dBm (*75 Ω Inputs only*)

5. On the analyzer, press **Single** and wait for the sweep to finish. Press **Peak Search** (or **Search**).
6. On the analyzer, press **Marker, Delta**.
7. Set the analyzer as follows:

   Trig, External (Pos)
   Sweep, Gate (On)
   Gate Setup, Edge Setup (or Edge Gate), Gate Delay, 1 μσ
   Gate Length, 1 μσ
   Sweep, Gate Setup (or Gate), Trig Type (Level) (or Gate Control (Level))

8. On the analyzer, press **Single** and wait for the sweep to finish. Press

ManualsPlus.com

Peak Search (or **Search**).

9. Record the marker delta (Δ `Mkr1`) amplitude reading as Test Record entry 1 in the performance test record.

ManualsPlus.com

52. First LO OUTPUT Power Accuracy (Option AYZ only)

This test applies only to analyzers equipped with external mixing (Option AYZ).

This test verifies that analyzers with external mixing (Option AYZ) meet their specification for First LO (local oscillator) output level. The flatness of the First LO output determines the flatness of measurements made using external mixers. In this test, a calibrated power sensor is connected to the First LO output to measure the power level at frequencies between 2.9 GHz and 7.1 GHz.

The analyzer is put into external mixing mode using a harmonic number of –10. The tuned frequency of the spectrum will therefore be 321.4 MHz (the frequency of the Second IF) below the Tenth harmonic of the First LO. A 321.4 MHz frequency offset is used so that the center frequency will be exactly 10 times the First LO frequency. Setting the center frequency step size to 2 GHz allows the LO frequency to be stepped in 200 MHz increments.

The related adjustment for this performance test is “LO Power Adjustment.”

Equipment Required

Power meter
Microwave power sensor
Adapter, type-N (m) to SMA (f)

Figure 2-72 First LO Output Amplitude Accuracy Test Setup

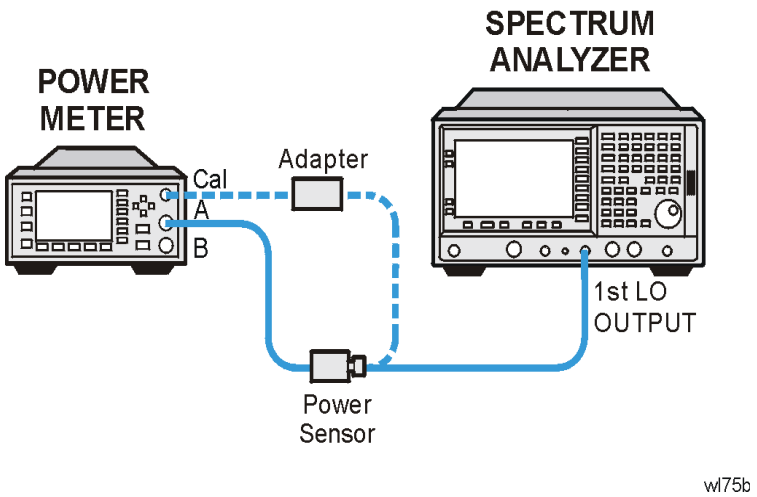

ManualsPlus.com

Procedure

1. Zero and calibrate the power sensor and power meter combination at 50 MHz. Set the power meter for dBm output.
2. Enter the 3 GHz calibration factor of the power sensor into the power meter.
3. Remove the termination from the First LO OUTPUT connector of the analyzer.
4. Connect the power sensor to the First LO OUTPUT connector of the analyzer as shown in Figure 2-72.
5. Press **Preset** on the analyzer. Press the **Factory Preset** softkey, if it is displayed. Set the analyzer by pressing the following keys:

   Input/Output, Input Mixer, Input Mixer (Ext)
   Mixer Config, Harmonic, –10
   SPAN, Zero Span
   FREQUENCY, **30 GHz**
   CF Step, 2 GHz
   Freq Offset, 321.4 MHz
   System, Alignments, Auto Align, Off

6. Press **FREQUENCY**, on the analyzer.
7. Read the power displayed on the power meter and record it as Test Record entry 1 in the Performance Verification Test Record.
8. Press the ⇑ key on the analyzer to select the next center frequency and First LO frequency.
9. Enter the appropriate power sensor calibration factor into the power meter as shown in Table 2-107.
10. Read the power displayed on the power meter and record it in the Performance Verification Test Record as indicated in the Test Record entry column of Table 2-107.
11. Repeat step 8 through step 10 for the remaining center frequency and First LO frequencies listed in Table 2-107.

ManualsPlus.com

Table 2-107 First LO Output Amplitude Accuracy Worksheet

First LO Frequency (GHz)	Center Frequency (GHz)	Calibration Factor Frequency (GHz)	Test Record Entry
2.9	29	3.0	1)
3.3	33	3.0	2)
3.7	37	4.0	3)
3.9	39	4.0	4)
4.1	41	4.0	5)
4.5	45	5.0	6)
4.9	49	5.0	7)
5.3	53	5.0	8)
5.7	57	6.0	9)
5.9	59	6.0	10)
6.1	61	6.0	11)
6.5	65	7.0	12)
6.9	69	7.0	13)
7.1	71	7.0	14)

Post-Test Instrument Restoration

12. Disconnect the power sensor from the 1st LO OUTPUT connector.
13. Replace the 50 Ω termination on the 1st LO OUTPUT connector.
14. Press **Preset** the analyzer.
15. Press **System, Alignments, Auto Align, All**.

ManualsPlus.com

53. IF INPUT Accuracy (Option AYZ only)

This test only applies to analyzers equipped with external mixing (Option AYZ).

This test measures the accuracy of the IF INPUT. A nominal –30 dBm, 321.4 MHz signal is applied to a power sensor and the power level is recorded. The actual frequency must be offset slightly to compensate for the IF centering error of the 1 kHz resolution bandwidth. This frequency offset is measured using the 321.4 MHz signal applied to the 50 Ω Input connector. The signal is measured with frequency corrections on and off. The difference between these two measurements is the IF centering error. The 321.4 MHz signal is then offset by the IF centering error.

This signal is then applied to the IF INPUT of the analyzer which is set to external mixing mode in A band (26.5 GHz to 40 GHz). Amplitude corrections are set to 0 dB. The amplitude is measured by the analyzer and then recorded. The difference between the two measurements is the IF INPUT accuracy.

The related adjustment procedure for this performance test is "IF INPUT Correction."

Equipment Required

Synthesized sweeper
Power meter
Low-power power sensor
30 dB reference attenuator
Cable, APC 3.5
Cable, BNC
Adapter, type-N (m) to APC 3.5 (f) (*not required for Option BAB*)
Adapter, APC 3.5 (f) to APC 3.5 (f) (*two required for Option BAB*)
Adapter, type-N (f) to APC 3.5 (f)

ManualsPlus.com

Figure 2-73 IF INPUT Accuracy Test Setup

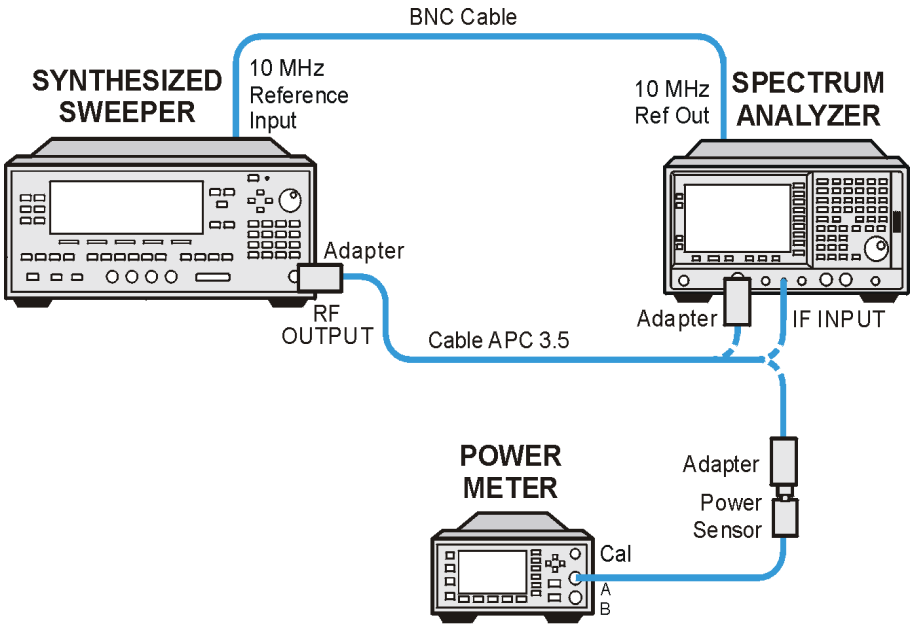

wl76b

Procedure

Determining the IF Centering Error

1. Preset the synthesized sweeper and set the controls as follows:

   CW321.4 MHz
   POWER LEVEL–30 dBm
   RFOn

2. Connect the synthesized sweeper output to the analyzer 50 Ω Input connector. The analyzer provides the frequency reference for the synthesized sweeper.

3. Press **Preset** on the analyzer. Press the **Factory Preset** softkey, if it is displayed. Set the analyzer by pressing the following keys:

   System, Alignments, Auto Align, Off
   FREQUENCY, 321.4 MHz
   SPAN, 5 kHz
   AMPLITUDE, –30 dBm
   BW/Avg, Res BW, 1 kHz

4. On the analyzer, press **Single** and wait for the sweep to finish.

5. On the analyzer, press the following keys:

   Peak Search (or **Search**)
   Marker, Delta
   System, Alignments, Freq Correct (Off).

ManualsPlus.com

6. On the analyzer, press **Single** and wait for the sweep to finish.
7. On the analyzer, press **Peak Search** (or **Search**).
8. Note the marker delta (Δ `Mkr1`) frequency.
9. Calculate the new synthesized sweeper CW frequency by adding the marker delta (Δ `Mkr1`) frequency to 321.4 MHz. Set the synthesized sweeper CW frequency to the new calculated frequency.

   New CW Frequency = 321.4 MHz + ΔMkr1 Frequency

   For example, if the marker delta (Δ `Mkr1`) frequency is 725 Hz, the new CW frequency would be 321.400725 MHz.
10. On the analyzer, press **System**, **Alignments**, **Freq Correct** (On).

Setting the Synthesized Sweeper Power Level

11. Zero and calibrate the low-power sensor and power meter in dBm mode using the 30 dB reference attenuator. Enter the 300 MHz calibration factor of the power sensor into the power meter.
12. Connect the equipment as shown in Figure 2-73, with the output of the synthesized sweeper connected to the power sensor using an adapter between the cable and the power sensor.
13. Adjust the synthesized sweeper power level for a power meter reading of –30 dBm ±0.1 dB.
14. Record the power meter reading as Input Power.

    Input Power _____dBm

Measuring the IF INPUT Accuracy

15. Connect the APC 3.5 cable from the RF OUTPUT of the synthesized sweeper to the IF INPUT of the analyzer.
16. Press **Preset** on the analyzer. Press the **Factory Preset** softkey, if it is displayed. Set the analyzer by pressing the following keys:

    System, Alignments, Auto Align, Off
    AMPLITUDE, More 1 of 2, Corrections, Corrections (Off)
    AMPLITUDE, –30 dBm
    Input/Output, Input Mixer, Input Mixer (Ext)
    Ext Mix Band, 26.5–40 GHz
    FREQUENCY, 30 GHz
    SPAN, Zero Span
    BW/Avg, Res BW, 1 kHz
17. Press **Peak Search** on the analyzer. Record the marker (`Mkr1`) amplitude reading as the Measured Power.

    Measured Power _____dBm

ManualsPlus.com

18. Subtract the Input Power (step 14) from the Measured Power (step 17) and record the difference as the IF INPUT Accuracy.

    IF INPUT Accuracy = Measured Power – Input Power

    For example, if the Measured Power is –29.34 dBm and the Input Power is –30.08 dBm, the IF INPUT Accuracy would be 0.74 dB.

19. Record the IF INPUT Accuracy as Test Record entry 1 in the Performance Verification Test Record.

Post-Test Instrument Restoration

20. Disconnect the cable from the IF INPUT connector.

21. Preset the analyzer.

22. On the analyzer, press the following keys:

    System, **Alignments**
    Auto Align, **All**

ManualsPlus.com

54. Comms Frequency Response (Option BAC or BAH)

This test measures the analyzer amplitude error as a function of frequency. The output of a source is fed through a power splitter to a power sensor and the analyzer. The source's power level is adjusted at 50 MHz to place the displayed signal at the analyzer center graticule line. The power meter is then set to measure dB relative to the power level at 50 MHz. At each new analyzer source frequency and center frequency, the source power level is adjusted to place the signal at the center horizontal graticule line. The power meter displays the inverse of the frequency response relative to 50 MHz.

For improved amplitude accuracy in the PCS and Cellular bands, a power splitter is characterized using a second power sensor (the "reference" sensor) connected to one power splitter output port. The other power splitter output port connects to the "buried" sensor; it is not removed from the power splitter. Once the characterization is done, the reference sensor is removed and replaced by the analyzer.

This procedure also tests frequency response with the optional preamplifier (Option 1DS) turned on if the analyzer is equipped with Option 1DS. When testing the preamplifier, it is necessary to re-characterize the power splitter/buried sensor combination.

The related adjustment for this performance test is "Frequency Response."

NOTE There is no performance test record provided for recording the results of this test. Results of this test are required by test 59. Comms Absolute Power Accuracy (Options BAC or BAH), located in this chapter.

There are no related adjustment procedures for this performance test.

Equipment Required

Synthesized sweeper
Function generator
Power meter
RF Power sensor (*2 required*)
Microwave power sensor
Microwave power splitter
Adapter, APC 3.5 (f) to APC 3.5 (f)
Adapter, Type-N (m) to Type-N (m)
Adapter, Type-N (m) to BNC (f)
Fixed Attenuator, 20 dB
BNC Tee (BNC f,m,f)
Cable, BNC, 122-cm (48-in) (*2 required*)

ManualsPlus.com

Cable, Type-N, 183-cm (72-in)
Cable, APC 3.5
Termination, 50 Ω, BNC (m)

Procedure

Part 1: Source/Splitter Characterization

NOTE On analyzers equipped with the optional preamplifier, Option 1DS, this characterization will be performed twice. The first characterization, which will be performed on all analyzers, will be performed without the 20 dB fixed attenuator connected. The second characterization, which will be performed only on analyzers with Option 1DS, will be performed with the 20 dB fixed attenuator connected.

1. Connect the Agilent 8482A to Channel A of the power meter. This will be the “reference” sensor. Connect the other Agilent 8482A to Channel B of the power meter. This will be the “buried” sensor. Refer to Figure 2-74.

Figure 2-74 Source/Splitter Characterization Setup

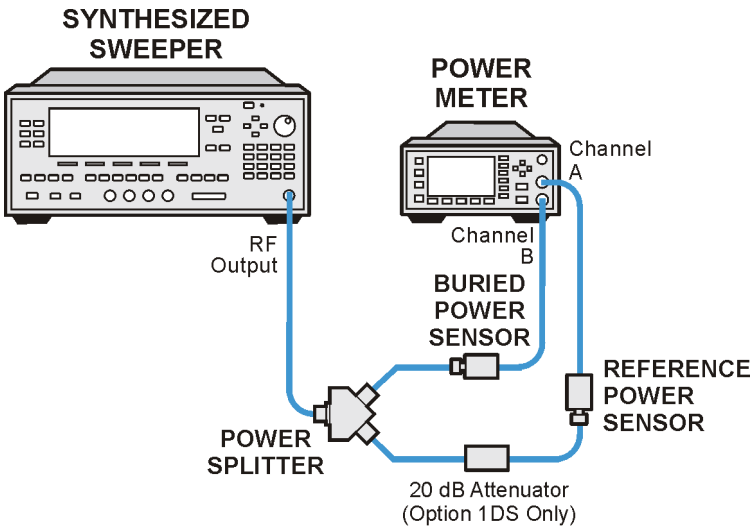

2. Zero and calibrate both power sensors.
3. On the power meter, set the Channel A calibration factor to the calibration factor of the reference sensor for 50 MHz.
4. On the power meter, set the Channel B calibration factor to 100%. Do not change this calibration factor during this test.
5. Connect the equipment as shown in Figure 2-74. Do not use the 20 dB fixed attenuator unless frequency response with the Preamp On

ManualsPlus.com

is being measured.

6. Set the source frequency to 50 MHz and amplitude to 0 dBm.
7. Adjust the source amplitude to obtain a Channel A power meter reading of –10 dBm ±0.1 dB (if the preamp is not being tested), or a power meter reading of –20 dBm ±0.1 dB (if the preamp is being tested).
8. Record the source amplitude setting, and both the Channel A and Channel B power meter readings in Table 2-108.
9. Tune the source to the next frequency in Table 2-108.
10. On the power meter, set the Channel A calibration factor to the calibration factor of the reference sensor for the current source frequency.
11. Adjust the source amplitude to obtain a Channel A power meter reading of –10 dBm ±0.1 dB (if the preamp is not being tested), or a power meter reading of –20 dBm ±0.1 dB (if the preamp is being tested).
12. Record the source amplitude setting, and both the Channel A and Channel B power meter readings in Table 2-108. If the preamp is being measured, enter these values in the “Preamp On” columns. Otherwise, enter these values in the “Preamp Off” columns.
13. Repeat step 9 through step 12 for frequencies up to 2000 MHz in Table 2-108.
14. For each entry in Table 2-108, calculate the splitter tracking error as follows:

    Splitter Tracking Error = Channel A Power – Channel B Power

    For example, if Channel A Power is –10.05 dBm and Channel B Power is –10.23 dBm, the Splitter Tracking Error is 0.18 dB.

NOTE When calculating the splitter tracking error with the 20 dB fixed attenuator in place, the splitter tracking errors will be nominally 20 dB.

Table 2-108 Source/Splitter Characterization

Frequency	Power Meter Reading				Splitter Tracking Error		Source Power Setting	
	Channel A		Channel B					
	Preamp Off	Preamp On	Preamp Off	Preamp On	Preamp Off	Preamp On	Preamp Off	Preamp On
50 MHz								
800 MHz								

ManualsPlus.com

Table 2-108 Source/Splitter Characterization

Frequency	Power Meter Reading				Splitter Tracking Error		Source Power Setting	
	Channel A		Channel B					
	Preamp Off	Preamp On	Preamp Off	Preamp On	Preamp Off	Preamp On	Preamp Off	Preamp On
810 MHz								
820 MHz								
830 MHz								
840 MHz								
850 MHz								
860 MHz								
880 MHz								
890 MHz								
900 MHz								
910 MHz								
920 MHz								
930 MHz								
940 MHz								
950 MHz								
960 MHz								
970 MHz								
980 MHz								
990 MHz								
1000 MHz								
1700 MHz								
1710 MHz								
1720 MHz								
1730 MHz								
1740 MHz								
1750 MHz								
1760 MHz								
1770 MHz								
1780 MHz								

ManualsPlus.com

Table 2-108 Source/Splitter Characterization

Frequency	Power Meter Reading				Splitter Tracking Error		Source Power Setting	
	Channel A		Channel B					
	Preamp Off	Preamp On	Preamp Off	Preamp On	Preamp Off	Preamp On	Preamp Off	Preamp On
1790 MHz								
1800 MHz								
1810 MHz								
1820 MHz								
1830 MHz								
1840 MHz								
1850 MHz								
1860 MHz								
1870 MHz								
1880 MHz								
1890 MHz								
1900 MHz								
1910 MHz								
1920 MHz								
1930 MHz								
1940 MHz								
1950 MHz								
1960 MHz								
1970 MHz								
1980 MHz								
1990 MHz								
2000 MHz								

ManualsPlus.com

Part 2: Measuring Frequency Response, 800 MHz to 1000 MHz, 1700 MHz to 2000 MHz (0 dB, 5 dB, 10 dB, 25 dB, and 40 dB Attenuation)

Figure 2-75 Comms Frequency Response Test Setup

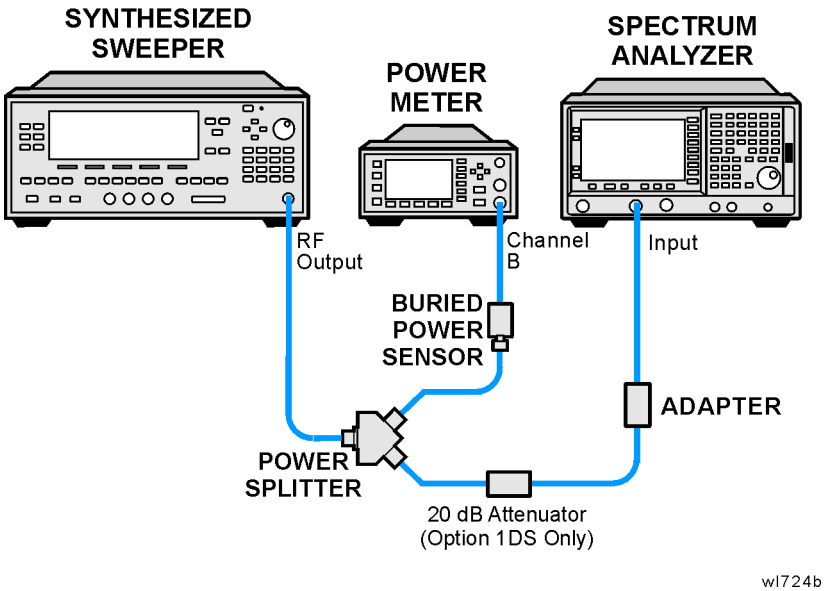

1. This procedure will be performed several times with various combinations of input attenuation, resolution bandwidth, and preamp settings as described in Table 2-109. Make 6 copies of Table 2-110 (7 copies if the analyzer is equipped with the preamp, Option 1DS). Label each copy with the information listed in Table 2-109.

Table 2-109 Comms Frequency Response Measurement Conditions

Test	Measurement	Attenuation	Res BW	Preamp
1	cdmaOne Channel Power Accuracy	40 dB	10 kHz	Off
2		25 dB	10 kHz	Off
3		10 dB	10 kHz	Off
4	GSM Transmit Power Accuracy	40 dB	300 kHz	Off
5		5 dB	300 kHz	Off
6	cdmaOne Receive Channel Power Accuracy	0 dB	10 kHz	Off
7	cdmaOne Receive Channel Power Accuracy (Preamp On)	0 dB	10 kHz	On

2. Remove the reference sensor (Channel A sensor) from the power

ManualsPlus.com

splitter. Connect the power splitter to the analyzer 50 Ω Input using an adapter. Do not use a cable. If measuring with the preamp on, connect the 20 dB attenuator to the analyzer input. Refer to Figure 2-75.

3. Set the source frequency to 50 MHz.
4. Set the source POWER LEVEL to –6 dBm.
5. Press **Preset** on the analyzer. Press the **Factory Preset** softkey, if it is displayed. Set the controls as follows:

   FREQUENCY, Center Freq, 800 MHz
   CF Step, 10 MHz
   SPAN, 0 kHz
   Input/Output (or **Input**), **Coupling** (AC) *(ESA 6.7 GHz and 13.2 GHz only)*
   (Tests 1–6) **AMPLITUDE, More, Int Preamp, (Off)** *(Option 1DS only)*
   (Test 7) **AMPLITUDE, More, Int Preamp, (On)** *(Option 1DS only)*
   AMPLITUDE, More, Y-Axis Units (or **Amptd Units**), **dBm**
   (Tests 1–6) AMPLITUDE, Ref Level, –10 dBm
   (Test 7) AMPLITUDE, Ref Level, –30 dBm
   Attenuation, x dB (Man) Where x is listed in Table 2-109.
   Scale/Div, 1 dB
   (Tests 1, 2, 3, 6, 7) **BW/Avg, Res BW, 10 kHz** (Man)
   (Tests 4, 5) **BW/Avg, Res BW, 300 kHz** (Man)
   Video BW, 10 kHz (Man)

6. Press **Marker**.
7. Adjust the source POWER LEVEL to obtain a marker amplitude reading of –12 dBm ±0.1 dB (Tests 1–6) or –32 dBm ±0.1 dB (Tests 7)
8. Record the current Channel B power reading in Table 2-110 as the current Channel B reading.
9. Trigger a sweep on the analyzer.
10. Perform a peak search on the analyzer. Manually press **Peak Search (or Search)**.
11. Record the marker (`Mkr1`) amplitude reading in Table 2-110.
12. Set the source to the next frequency listed in Table 2-110.
13. Set the analyzer center frequency to the next frequency listed in Table 2-110 by pressing the FREQUENCY and up arrow keys to step the center frequency.
14. Adjust the source POWER LEVEL to obtain a marker amplitude reading of –12 dBm ±0.1 dB (Tests 1–6) or –32 dBm ±0.1 dB (Tests 7)
15. Record the current Channel B power reading in Table 2-110 as the current Channel B reading.
16. Trigger a sweep on the analyzer.

ManualsPlus.com

17. Perform a peak search on the analyzer. Manually press **Search**.
18. Record the marker (`Mkr1`) amplitude reading in Table 2-110 as marker (`Mkr1`) Amptd.
19. Repeat step 12 through step 18 for each frequency in Table 2-110.
20. Copy the splitter tracking errors from Table 2-108 into Table 2-110. For Tests 1–6, use the Preamp Off values. For Test 7, use the Preamp On values.
21. Calculate the Flatness Error for each frequency in Table 2-110 as follows:

Flatness Error = Mkr1 Amptd – Current Channel B – Splitter Tracking Error

For example, if marker (`Mkr1`) Amptd is –10.32 dBm, Current Channel B is –10.2 and Splitter Tracking Error is 0.18 dB, Flatness Error would be –0.30 dB.

22. Record the Flatness Error for 50 MHz below as the 50 MHz Ref Amptd:

    50 MHz Ref Amptd: _____

23. Calculate the Flatness Relative to 50 MHz for each frequency in Table 2-110 as follows:

Flatness Relative to 50 MHz = Flatness Error – 50 MHz Ref Amptd

For example, if Flatness Error is –30.0 dB, 50 MHz Ref Amptd is 0.15 dB and setup change error is –0.19 dB, Flatness Relative to 50 MHz would be –0.45 dB.

24. Repeat step 2 through step 23 of Part 2 using the attenuation and resolution bandwidth settings as indicated in Table 2-109 for Tests 2–6.
25. If the analyzer is equipped with the optional preamplifier, Option 1DS, perform Part 1, the Source/Splitter Characterization again for the Preamp On case.
26. If the analyzer is equipped with the optional preamplifier, Option 1DS, perform step 2 through step 23, Part 2, using the attenuation and resolution bandwidth settings as indicated in Table 2-109 for Test 7.
27. Proceed to Part 3: Test Results.

ManualsPlus.com

Table 2-110 Frequency Response Worksheet
Test:_____ Atten:_____ RBW:_____ Preamp:_____

Frequency	Current Channel B Reading	Marker (Mkr1) Amptd	Splitter Tracking Error	Flatness Error	Flatness Relative to 50 MHz
50 MHz					0 dB (Ref)
800 MHz					
810 MHz					
820 MHz					
830 MHz					
840 MHz					
850 MHz					
860 MHz					
870 MHz					
880 MHz					
890 MHz					
900 MHz					
910 MHz					
920 MHz					
930 MHz					
940 MHz					
950 MHz					
960 MHz					
970 MHz					
980 MHz					
990 MHz					
1000 MHz					
1700 MHz					
1710 MHz					
1720 MHz					
1730 MHz					

ManualsPlus.com

Table 2-110 Frequency Response Worksheet
Test:_____ Atten:_____ RBW:_____ Preamp:_____

Frequency	Current Channel B Reading	Marker (Mkr1) Amptd	Splitter Tracking Error	Flatness Error	Flatness Relative to 50 MHz
1740 MHz					
1750 MHz					
1760 MHz					
1770 MHz					
1780 MHz					
1790 MHz					
1800 MHz					
1810 MHz					
1820 MHz					
1830 MHz					
1840 MHz					
1850 MHz					
1860 MHz					
1870 MHz					
1880 MHz					
1890 MHz					
1900 MHz					
1910 MHz					
1920 MHz					
1930 MHz					
1940 MHz					
1950 MHz					
1960 MHz					
1970 MHz					
1980 MHz					
1990 MHz					
2000 MHz					

ManualsPlus.com

Part 3: Test Results

1. Repeat the following steps using the Table 2-110 data for each set of test data for Tests 1–6 (Option 1DS, Tests 1–7):

   a. Record the most positive number from the Flatness Relative to 50 MHz column for the 800 MHz to 1000 MHz range in Table 2-110 as the Maximum Response in the 800 MHz to 1000 MHz Cellular Band for the appropriate test number.

   b. Record the most positive number from the Flatness Relative to 50 MHz column for the 1700 MHz to 2000 MHz range in Table 2-110 as the Maximum Response in the 1700 MHz to 2000 MHz PCS Band for the appropriate test number.

   c. Record the most negative number from the Flatness Relative to 50 MHz column for the 800 MHz to 1000 MHz range in Table 2-110 as the Minimum Response in the 800 MHz to 1000 MHz Cellular Band for the appropriate test number.

   d. Record the most negative number from the Flatness Relative to 50 MHz column for the 1700 MHz to 2000 MHz range in Table 2-110 as the Minimum Response in the 1700 MHz to 2000 MHz PCS Band for the appropriate test number.

Table 2-111 Absolute Frequency Response

Test	800 MHz to 1000 MHz Cellular Band		1700 MHz to 2000 MHz PCS Band	
	Minimum Response (dB)	Maximum Response (dB)	Minimum Response (dB)	Maximum Response (dB)
1				
2				
3				
4				
5				
6				
7				

2. Repeat the following using the data in Table 2-111 for Tests 1–6 (Option 1DS, Tests 1–7):

   a. Subtract the Minimum Response for the 800 MHz to 1000 MHz Cellular Band from The Maximum Response for the 800 MHz to 1000 MHz Cellular Band and record the difference as the Peak-to-Peak Response in Table 2-112 for the appropriate test number.

ManualsPlus.com

b. Subtract the Minimum Response for the 1700 MHz to 2000 MHz PCS Band from The Maximum Response for the 1700 MHz to 2000 MHz PCS Band and record the difference as the Peak-to-Peak Response in Table 2-113 for the appropriate test number.

3. The Comms Frequency Response test is completed

Table 2-112 Comms Frequency Response Test Results, Cellular Bands

Test	Measurement	Attenuation	Res BW	Preamp	Peak-to-Peak Response (dB)
1	cdmaOne Channel Power Accuracy	40 dB	10 kHz	Off	
2		25 dB	10 kHz	Off	
3		10 dB	10 kHz	Off	
4	GSM Transmit Power Accuracy	40 dB	300 kHz	Off	
5		5 dB	300 kHz	Off	
6	cdmaOne Receive Channel Power Accuracy	0 dB	10 kHz	Off	
7	cdmaOne Receive Channel Power Accuracy (Preamp On)	0 dB	10 kHz	On	

NOTE There is no performance test record provided for recording the results of this test. Results of this test are required by test 59. Comms Absolute Power Accuracy (Options BAC or BAH), located in this chapter.

Table 2-113 Comms Frequency Response Test Results, PCS Bands

Test	Measurement	Attenuation	Res BW	Preamp	Peak-to-Peak Response (dB)
1	cdmaOne Channel Power Accuracy	40 dB	10 kHz	Off	
2		25 dB	10 kHz	Off	
3		10 dB	10 kHz	Off	
4	GSM Transmit Power Accuracy	40 dB	300 kHz	Off	
5		5 dB	300 kHz	Off	
6	cdmaOne Receive Channel Power Accuracy	0 dB	10 kHz	Off	
7	cdmaOne Receive Channel Power Accuracy (Preamp On)	0 dB	10 kHz	On	

ManualsPlus.com

58. GSM Phase and Frequency Error (Options BAH and B7E)

This test verifies the ability of a UUT (unit under test) to measure phase and frequency error in the GSM personality (Option BAH). ESA Series Spectrum Analyzers that use both Options BAH and B7E are used to measure and verify the performance of the phase and frequency error in the GSM personality.

Phase and frequency error in the GSM personality is measured by generating a GSM forward link carrier with a single active time slot. Note that Option B7D is a required Option for B7E. This test is repeated at different frequencies and amplitude signal levels.

There are no related adjustment procedures for this performance test.

Equipment Required

Sythesized signal generator with GSM capabilities
Cable, BNC, 120-cm (48-in.)
Cable, Type N, 183-cm (73-in.)

Figure 2-76 GSM Phase and Frequency Test Setup

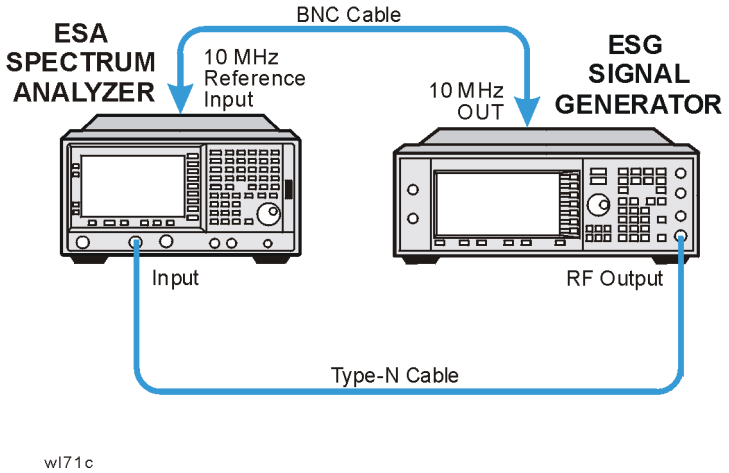

Procedure

Set the signal generator to generate a single forward link GSM modulated carrier with a single time slot by performing the following steps:

NOTE The signal generator provides the 10 MHz reference for the analyzer.

ManualsPlus.com

1. Set up the equipment as shown in Figure 2-76.
2. Preset the signal generator by pressing the **PRESET** hardkey.
3. To enter the GSM setup, press the following signal generator keys:

   MODE, **Real Time I/Q Baseband**
   TDMA, GSM

4. Press the **Data Format Continuous/Framed** softkey and highlight **Framed** to select a single time slot.
5. Turn on the GSM setup screen by pressing the **GSM ON/OFF** softkey and highlighting **ON**.
6. Turn RF on by pressing the **RF ON/OFF** softkey.
7. Set the signal generator frequency to the first frequency listed in Column 1 of Table 2-114.
8. Set the signal generator amplitude to the first amplitude listed in Column 2 of Table 2-114.
9. Set the analyzer to measure GSM phase and frequency error by performing the following steps:
   a. Preset the analyzer by pressing the **Preset** hardkey.
   b. Enter the GSM personality by pressing the **Mode** hardkey followed by the **GSM** softkey.
   c. Initiate the phase and frequency measurement by pressing the **Measure** hardkey followed by the **Phase and Frequency** softkey.
   d. Use the first frequency listed in the Table 2-114 by pressing the **Frequency** hardkey, **Channel Freq** and entering the numeric value.
10. Press **Meas Setup**. If the Average Type softkey is present, press **Average Type** to highlight Mean.
11. Press **Average Number**, **10**, **Enter**.
12. Press **Single**. The analyzer will make ten measurements and report the average values for peak and RMS phase errors and frequency error.
13. Enter the peak and RMS phase errors and the frequency error in the appropriate row of Table 2-114.

Table 2-114 GSM - Phase and Frequency Measurement Table

ESA/ESG Frequency (MHz)	ESG Amplitude (dBm)	Phase Error (deg)		Frequency Error (Hz)
		Peak	RMS	
900	0			

ManualsPlus.com

Table 2-114 GSM - Phase and Frequency Measurement Table

ESA/ESG Frequency (MHz)	ESG Amplitude (dBm)	Phase Error (deg)		Frequency Error (Hz)
		Peak	RMS	
900	–30			
1800	0			
1800	–30			

14. Repeat step 7 through step 13 for each of the frequencies and amplitudes listed in Table 2-114.
15. Record the worst peak phase error from Column 3 as Entry 1 in the performance test record.
16. Record the worst RMS phase error from Column 4 as Entry 2 in the performance test record.
17. Record the worst frequency error from Column 5 as Entry 3 in the performance test record.

ManualsPlus.com

59. Comms Absolute Power Accuracy (Options BAC or BAH)

This test measures the absolute amplitude of the ESA Series Spectrum Analyzer at numerous input levels, attenuator settings, and log levels. The test also measures the amplitude accuracy with the Preamp On when Option 1DS is present. The measured performance, when added to the absolute frequency response over a 20 to 30 °C temperature range, yields the Comms Absolute Accuracy. The absolute frequency response is tested separately. Refer to the Frequency Response performance test.

The frequency response is not specified in the Cellular nor PCS bands; therefore, the Comms Frequency Response test must be completed first. The worksheet data will be used with the results of the Comms Amplitude Accuracy at 50 MHz to yield to the Comms absolute accuracy in the Cellular and PCS bands.

A sythesized signal generator and attenuators are used as the signal source to the analyzer. A power meter is used to measure the signal source (with the attenuators set to 0 dB). The value measured is recorded as the source amplitude. 15 dBm as well as 0 dBm are the source levels used.

The attenuators are used to adjust the signal levels applied to the analyzer from the initial signal amplitude. The amplitude measured by the analyzer is compared to the actual signal level and the amplitude error is then calculated.

This test is repeated at different frequencies and amplitude signal levels.

The related adjustment for this performance test is the “IF Amplitude Adjustment.”

Equipment Required

Synthesized signal generator
10 dB step attenuator
1 dB step attenuator
Attenuator interconnection kit
Attenuator driver (if programmable step attenuators are used)
Power meter
Power sensor
Cable, Type-N, 62 cm (24 in.) (m) (2 *required*)
Cable, BNC
Adapter, Type-N (f) to Type-N (f)

ManualsPlus.com

Additional Equipment for Option BAB

Adapter, Type N (f) to APC 3.5 (f)

Figure 2-77 Measure Source Test Setup

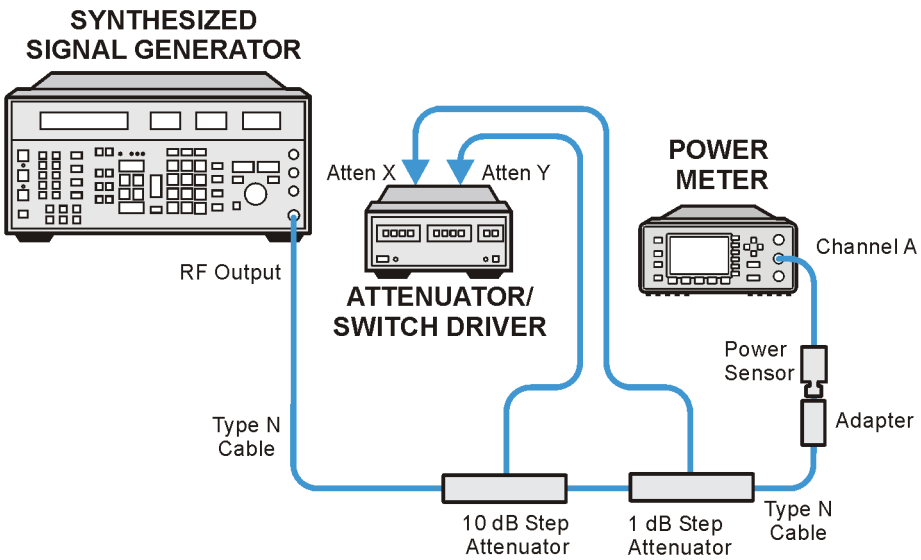

eswcommspwraccy

Procedure

Part 1: cdmaOne Channel Power and GSM Transmit Power

Table 2-115, Table 2-116, Table 2-119, and Table 2-120 list the reference level, input attenuation, and nominal input level for the analyzer, and nominal attenuation for the calibrated 1 dB and 10 dB step attenuators for the amplitude accuracy measurements.

Table 2-115 cdmaOne Channel Power (Option BAC), Preamp Off, Input Level ≥–25 dBm

Nominal Input Level (dBm)	Reference Level (dBm)	Resolution Bandwidth (kHz)	Internal Attenuator (dB)	1 dB Step Attenuator (dB)	10 dB Step Attenuator (dB)	Nominal Source Level (dBm)
15	15	10	40	0	0	15
15	30	10	40	0	0	15
–5	–5	10	25	0	20	15
–5	15	10	25	0	20	15
–25	–25	10	10	0	40	15

ManualsPlus.com

Table 2-115 cdmaOne Channel Power (Option BAC), Preamp Off, Input Level ≥–25 dBm

Nominal Input Level (dBm)	Reference Level (dBm)	Resolution Bandwidth (kHz)	Internal Attenuator (dB)	1 dB Step Attenuator (dB)	10 dB Step Attenuator (dB)	Nominal Source Level (dBm)
–25	–5	10	10	0	40	15

Table 2-116 GSM Transmit Power (Option BAH), Preamp Off, Input Level >–20 dBm

Nominal Input Level (dBm)	Reference Level (dBm)	Resolution Bandwidth (kHz)	Internal Attenuator (dB)	1 dB Step Attenuator (dB)	10 dB Step Attenuator (dB)	Nominal Source Level (dBm)
15	15	300	40	0	0	15
15	30	300	40	0	0	15

1. Press **Preset** on the analyzer. Press the **Factory Preset** softkey, if it is displayed. Wait for the preset routine to finish.
2. Perform a complete self-alignment and set Auto Align Off. Press **System, Alignments, Align Now, All**, and wait for the alignment routine to finish. Then, press **Return, Auto Align, Off**.
3. Zero and calibrate the power meter and power sensor connected to Channel A of the power meter.
4. Connect the equipment as shown in Figure 2-77.
5. Preset the synthesized signal generator. Press:
   Blue Key, Special, 0, 0 and set the signal generator as follows:

   FREQUENCY, 50 MHz
   AMPLITUDE, 15 dBm

6. Set the 10 dB and 1 dB step attenuators to 0 dB.
7. Obtain the actual attenuation for the 0 dB setting of each attenuator at 50 MHz from the metrology data for the step attenuators. In some cases this value might be zero, by definition. Add the two actual attenuations to obtain the 0 dB reference attenuation.

$$\text{RefAtten}_{0dB} = 10\text{ dB Actual}_{0dB} + 1\text{ dB Actual}_{0dB}$$

For example, if the actual attenuation for the 10 dB step attenuator at the 0 dB setting is 0.03 dB, then 10 dB Actual_{0dB} is 0.03 dB. If the actual attenuation for the 1 dB step attenuator at the 0 dB setting is

ManualsPlus.com

0.02 dB, then 1 dB $Actual_{0dB}$ is 0.02 dB. In this case $RefAtten_{0dB}$ is 0.05 dB.

8. Obtain the metrology data for the step attenuators at 50 MHz. Enter the actual attenuation values for each attenuator setting as indicated in Table 2-117, Table 2-118, Table 2-121, and Table 2-122.

Table 2-117 Amplitude Accuracy Worksheet, cdmaOne, Input Level ≥–25 dBm

1 dB Step Attenuator		10 dB Step Attenuator		Total Attenuation		Ref Level	Nominal Input Amptd	Meas Amptd	Amptd Accuracy
Setting	Actual	Setting	Actual	Setting	Actual				
0 dB		0 dB		0 dB		15 dBm	15 dBm		
0 dB		0 dB		0 dB		30 dBm	15 dBm		
0 dB		20 dB		20 dB		–5 dBm	–5 dBm		
0 dB		20 dB		20 dB		15 dBm	–5 dBm		
0 dB		40 dB		40 dB		–25 dBm	–25 dBm		
0 dB		40 dB		40 dB		–5 dBm	–25 dBm		

Table 2-118 Amplitude Accuracy Worksheet, GSM, Input Level >–20 dBm

1 dB Step Attenuator		10 dB Step Attenuator		Total Attenuation		Ref Level	Nominal Input Amptd	Meas Amptd	Amptd Accuracy
Setting	Actual	Setting	Actual	Setting	Actual				
0 dB		0 dB		0 dB		15 dBm	15 dBm		
0 dB		0 dB		0 dB		30 dBm	15 dBm		

9. Calculate the actual total attenuation by adding the actual attenuation for the 1 dB step attenuator to the actual attenuation for the 10 dB step attenuator for each total attenuation setting listed in Table 2-117, Table 2-118, Table 2-121, and Table 2-122.

NOTE The external attenuators and cables are now part of the “source.”

10. Adjust the signal generator amplitude for a power meter reading of 15 dBm ±0.2 dB. Record the power meter reading here:

    $Amptd_{15dBm}$ = _____ dBm

11. Connect the equipment as indicated in Figure 2-78.

ManualsPlus.com

Figure 2-78 Amplitude Accuracy Test Setup

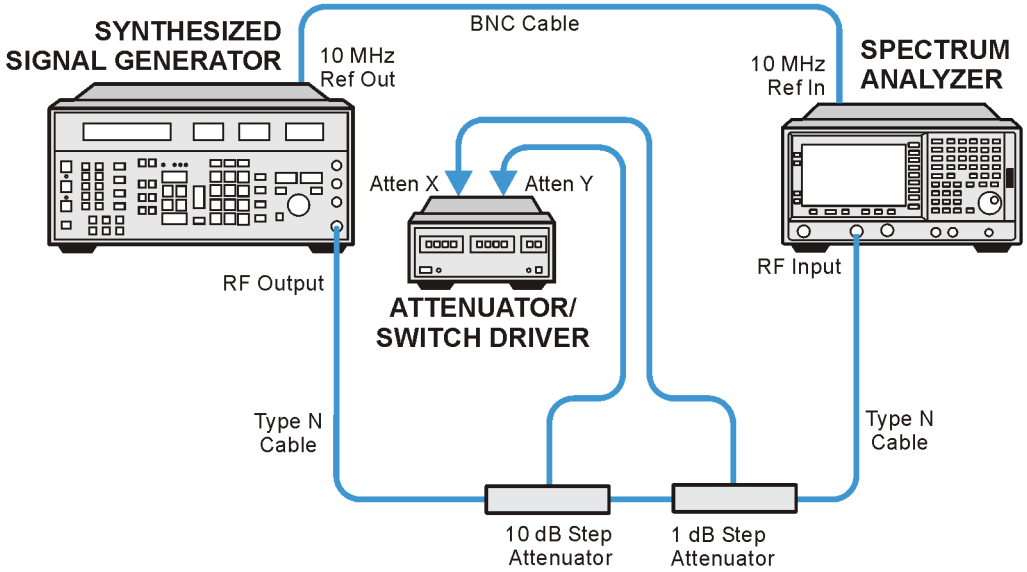

eswcommspwraccy

12. Set the analyzer as follows:

FREQUENCY, Center Freq, 50 MHz
SPAN, 0 kHz
BW/Avg, Res BW, 10 kHz
BW/Avg, Video BW, 10 kHz
AMPLITUDE, **More**, **Y Axis Units** (or **Amptd Units**), **dBm**
AMPLITUDE, Ref Level, 15 dBm
AMPLITUDE, Attenuation, 40 dB

13. Perform the following steps for each of the nominal amplitude values listed in Table 2-115 and Table 2-116:

a. Set the 1 dB step attenuator as indicated.
b. Set the 10 dB step attenuator as indicated.
c. Set the analyzer reference level as indicated.
d. Set the analyzer input attenuation as indicated.
e. Set the analyzer resolution bandwidth as indicated.
f. Press **Single** and wait for the sweep to finish.
g. Press **Peak Search** (or **Search**). The marker can still make a valid measurement even though the signal may be slightly above the reference level for the first nominal amplitude setting.
h. Record the marker (`Mkr1`) amplitude value as the Measured Amplitude in Table 2-117 and Table 2-118.
i. If the nominal amplitude is 15 dBm, calculate the amplitude accuracy as follows:

$$\text{Amplitude Accuracy} = \text{Measured Amplitude} - \text{Amptd}_{15\text{dBm}}$$

j. If the amplitude is less than 15 dBm, calculate the amplitude accuracy as follows:

ManualsPlus.com

$$\text{Amplitude Accuracy} = \text{Measured Amplitude} - (\text{Amptd}_{15\text{dBm}} - \text{ActualTotalAtten} + \text{RefAtten}_{0\text{dB}})$$

14. Set the 10 dB and 1 dB step attenuators to 0 dB.
15. Disconnect the cable from the analyzer input connector and connect the cable to the adapter and power sensor as shown in Figure 2-77.
16. Adjust the signal generator AMPLITUDE for a power meter reading of 0 dbm ± 0.2 dB. Record the power meter reading here:

    $\text{Amptd}_{0\text{dBm}}$ = _____ dBm

17. Connect the equipment as shown in Figure 2-78.
18. Perform the following steps for each of the "Nominal Input Amplitude" values listed in Table 2-119 and Table 2-120.

    a. Set the 1 dB step attenuator as indicated.
    b. Set the 10 dB step attenuator as indicated.
    c. Set the analyzer reference level as indicated.
    d. Set the analyzer input attenuation as indicated.
    e. Set the analyzer resolution bandwidth as indicated.
    f. Press **Single** and wait for the sweep to finish.
    g. Press **Peak Search** (or **Search**). The marker can still make a valid measurement, even though the signal may be slightly above the reference level for the first nominal amplitude setting.
    h. Record the marker (`Mkr1`) amplitude value as the Measured Amplitude in Table 2-121 and Table 2-122.
    i. Calculate the amplitude accuracy as follows:

$$\text{Amplitude Accuracy} = \text{Measured Amplitude} - (\text{Amptd}_{0\text{dB}} - \text{ActualTotalAtten} + \text{RefAtten}_{0\text{dB}})$$

Table 2-119 cdmaOne Channel Power (Option BAC), Preamp Off, Input level <–25 dBm

Nominal Input Amplitude (dBm)	Reference Level (dBm)	Resolution Bandwidth (kHz)	Input Attenuation (dB)	1 dB Step Attenuator (dB)	10 dB Step Attenuator (dB)	Nominal Source Level (dBm)
–45	–45	10	10	5	40	0
–45	–25	10	10	5	40	0
–55	–55	10	10	5	50	0
–55	–35	10	10	5	50	0
–70	–70	10	10	0	70	0
–70	–50	10	10	0	70	0

ManualsPlus.com

Table 2-120 GSM Transmit Power (Option BAH), Preamp Off, Input level ≤–20 dBm

Nominal Input Amplitude (dBm)	Reference Level (dBm)	Resolution Bandwidth (kHz)	Input Attenuation (dB)	1 dB Step Attenuator (dB)	10 dB Step Attenuator (dB)	Nominal Source Level (dBm)
–20	0	300	5	0	20	0
–20	–20	300	5	0	20	0
–30	–10	300	5	0	30	0
–30	–30	300	5	0	30	0
–40	–20	300	5	0	40	0
–40	–40	300	5	0	40	0
–50	–30	300	5	0	50	0
–50	–50	300	5	0	50	0
–60	–40	300	5	0	60	0
–60	–60	300	5	0	60	0

Table 2-121 Amplitude Accuracy Worksheet, cdmaOne, Input Level <–25 dBm

1 dB Step Attenuator		10 dB Step Attenuator		Total Attenuation		Ref Level	Nominal Input Amptd	Meas Amptd	Amptd Accuracy
Setting	Actual	Setting	Actual	Setting	Actual				
5 dB		40 dB		45 dB		–45 dBm	–45 dBm		
5 dB		40 dB		45 dB		–25 dBm	–45 dBm		
5 dB		50 dB		55 dB		–55 dBm	–55 dBm		
5 dB		50 dB		55 dB		–35 dBm	–55 dBm		
0 dB		70 dB		70 dB		–70 dBm	–70 dBm		
0 dB		70 dB		70 dB		–50 dBm	–70 dBm		

Table 2-122 Amplitude Accuracy Worksheet, GSM, Input Level ≤–20 dBm

1 dB Step Attenuator		10 dB Step Attenuator		Total Attenuation		Ref Level	Nominal Input Amptd	Meas Amptd	Amptd Accuracy
Setting	Actual	Setting	Actual	Setting	Actual				
0 dB		20 dB		20 dB		0 dBm	–20 dBm		
0 dB		20 dB		20 dB		–20 dBm	–20 dBm		
0 dB		30 dB		30 dB		–10 dBm	–30 dBm		

ManualsPlus.com

Table 2-122 Amplitude Accuracy Worksheet, GSM, Input Level ≤–20 dBm

1 dB Step Attenuator		10 dB Step Attenuator		Total Attenuation		Ref Level	Nominal Input Amptd	Meas Amptd	Amptd Accuracy
Setting	Actual	Setting	Actual	Setting	Actual				
0 dB		30 dB		30 dB		–30 dBm	–30 dBm		
0 dB		40 dB		40 dB		–20 dBm	–40 dBm		
0 dB		40 dB		40 dB		–40 dBm	–40 dBm		
0 dB		50 dB		50 dB		–30 dBm	–50 dBm		
0 dB		50 dB		50 dB		–50 dBm	–50 dBm		
0 dB		60 dB		60 dB		–40 dBm	–60 dBm		
0 dB		60 dB		60 dB		–60 dBm	–60 dBm		

19. Table 2-117 and Table 2-121 have two Amplitude Accuracy entries for each nominal input amplitude setting. For each of the nominal input amplitude setting pairs in Table 2-117 and Table 2-121, record the worst of the two Amplitude Accuracy values in Table 2-123 and Table 2-124 as the 50 MHz Amplitude Accuracy for the same Nominal Input Amplitude setting.

20. Table 2-118 and Table 2-122 have two Amplitude Accuracy entries for each nominal input amplitude setting. For each of the nominal input amplitude setting pairs in Table 2-118 and Table 2-122, record the worst of the two Amplitude Accuracy values in Table 2-125 and Table 2-126 as the 50 MHz Amplitude Accuracy for the same Nominal Input Amplitude setting.

21. Copy into Table 2-123 and Table 2-124 the peak-to-peak frequency response error for the appropriate input attenuation setting from the Comms Frequency Response Performance Test for both the 800 MHz to 1 GHz Cellular Band, and the 1.7 GHz to 2 GHz PCS Band measured in a 10 kHz resolution bandwidth.

22. Copy into Table 2-125 and Table 2-126 the peak-to-peak frequency response error for the appropriate input attenuation setting from the Comms Frequency Response Performance Test for both the 800 MHz to 1 GHz Cellular Band, and the 1.7 GHz to 2 GHz PCS Band measured in a 300 kHz resolution bandwidth.

23. For each Nominal Input Amplitude setting listed in Table 2-123, add the values for the 50 MHz Amplitude Accuracy (Column 2), the peak-to-peak response (Column 4), and the uncertainty (Column 5). Record the sum as the cdmaOne Channel Power Accuracy (Column 6). Repeat this step for Table 2-124, Table 2-125, and Table 2-126.

24. Record the cdmaOne Channel Power and GSM Transmit Power Results in the test record as indicated by the test record entry

ManualsPlus.com

numbers in parenthesis.

25.Continue with Part 2.

Table 2-123 cdmaOne Channel Power Accuracy (Cellular Band)

Nominal Input Amplitude (dBm)	50 MHz Amplitude Accuracy (dB)	Input Attenuation (dB)	Peak to Peak Response (800 MHz to 1 GHz) (dB)	Uncertainty (dB)	cdmaOne Channel Power Accuracy (dB) Columns 2+4+5
15		40		0.19	1)
–5		25		0.19	2)
–25		10		0.19	3)
–45		10		0.19	4)
–55		10		0.19	5)
–70		10		0.19	6)

Table 2-124 cdmaOne Channel Power Accuracy (PCS Band)

Nominal Input Amplitude (dBm)	50 MHz Amplitude Accuracy (dB)	Input Attenuation (dB)	Peak to Peak Response (1.7 GHz to 2 GHz) (dB)	Uncertainty (dB)	cdmaOne Channel Power Accuracy (dB) Columns 2+4+5 (dB)
15		40		0.19	7)
–5		25		0.19	8)
–25		10		0.19	9)
–45		10		0.19	10)
–55		10		0.19	11)
–70		10		0.19	12)

ManualsPlus.com

Table 2-125 GSM Transmit Power Accuracy (Cellular Band)

Nominal Input Amplitude (dBm)	50 MHz Amplitude Accuracy (dB)	Input Attenuation (dB)	Peak to Peak Response (800 MHz to 1 GHz) (dB)	Uncertainty (dB)	GSM Channel Power Accuracy Columns 2+4+5 (dB)
15		40		0.19	13)
–20		5		0.19	14)
–30		5		0.19	15)
–40		5		0.19	16)
–50		5		0.19	17)
–60		5		0.19	18)

Table 2-126 GSM Transmit Power Accuracy (PCS Band)

Nominal Input Amplitude (dBm)	50 MHz Amplitude Accuracy (dB)	Input Attenuation (dB)	Peak to Peak Response (1.7 GHz to 2 GHz) (dB)	Uncertainty (dB)	GSM Channel Power Accuracy Columns 2+4+5 (dB)
15		40		0.19	19)
–20		5		0.19	20)
–30		5		0.19	21)
–40		5		0.19	22)
–50		5		0.19	23)
–60		5		0.19	24)

ManualsPlus.com

Part 2: cdmaOne Receive Channel Power (Preamp Off)

Table 2-127 lists the reference level, input attenuation, and nominal input level for the analyzer, and nominal attenuation for the calibrated 1 dB and 10 dB step attenuators for the amplitude accuracy measurements.

Table 2-127 cdmaOne Receive Channel Power, Preamp Off (Option BAC)

Nominal Input Amplitude (dBm)	Reference Level (dBm)	Resolution Bandwidth (kHz)	Input Attenuation (dB)	1 dB Step Attenuator (dB)	10 dB Step Attenuator (dB)	Source Nominal Level (dBm)
–40	–20	10	0	0	40	0
–40	–40	10	0	0	40	0
–60	–40	10	0	0	60	0
–60	–60	10	0	0	60	0
–70	–50	10	0	0	70	0
–70	–70	10	0	0	70	0
–80	–60	10	0	0	80	0
–80	–80	10	0	0	80	0
–85	–65	10	0	5	80	0
–85	–85	10	0	5	80	0

1. Set the 10 dB step attenuator to 40 dB and the 1 dB step attenuator to 0 dB.
2. Obtain the actual attenuation for the 0 dB setting of each attenuator at 50 MHz from the metrology data for the step attenuators. In some cases this value might be zero, by definition. Add the two actual attenuations to obtain the 0 dB reference attenuation.

   $$\text{RefAtten}_{40dB} = 10\text{ dB Actual}_{40dB} + 1\text{ dB Actual}_{0dB}$$

   For example, if the actual attenuation for the 10 dB step attenuator at the 0 dB setting is 40.03 dB, then 10 dB Actual_{40dB} is 40.03 dB. If the actual attenuation for the 1 dB step attenuator at the 0 dB setting is 0.02 dB, then 1 dB Actual_{0dB} is 0.02 dB. In this case RefAtten_{40dB} is 40.05 dB.
3. Obtain the metrology data for the step attenuators at 50 MHz.
4. Calculate the actual total attenuation by adding the actual attenuation for the 1 dB step attenuator to the actual attenuation for the 10 dB step attenuator for each total attenuation setting listed in Table 2-128.

ManualsPlus.com

NOTE The external attenuators and cables are now part of the “source.”

Table 2-128 Amplitude Accuracy Worksheet

1 dB Step Attenuator		10 dB Step Attenuator		Total Attenuation		Ref. Level	Nominal Input Amptd	Meas Amptd	Amptd Accuracy
Setting	Actual	Setting	Actual	Setting	Actual				
0 dB		40 dB		40 dB		–20 dBm	–40 dBm		
0 dB		40 dB		40 dB		–40 dBm	–40 dBm		
0 dB		60 dB		60 dB		–40 dBm	–60 dBm		
0 dB		60 dB		60 dB		–60 dBm	–60 dBm		
0 dB		70 dB		70 dB		–50 dBm	–70 dBm		
0 dB		70 dB		70 dB		–70 dBm	–70 dBm		
0 dB		80 dB		80 dB		–60 dBm	–80 dBm		
0 dB		80 dB		80 dB		–80 dBm	–80 dBm		
0 dB		80 dB		80 dB		–65 dBm	–85 dBm		
5 dB		80 dB		85 dB		–85 dBm	–85 dBm		

5. Set the analyzer as follows:

   FREQUENCY, Center Freq, 50 MHz
   SPAN, 0 kHz
   BW/Avg, Res BW, 10 kHz
   BW/Avg, Video BW, 10 kHz
   AMPLITUDE, More, Y-Axis Units (or Amptd Units), dBm
   AMPLITUDE, Ref Level, –20 dBm
   AMPLITUDE, Attenuation, 0 dB
   AMPLITUDE, More, Int Preamp Off

6. Perform the following steps for each of the “Nominal Input Amplitude” values listed in Table 2-127.

   a. Set the 1 dB step attenuator as indicated.
   b. Set the 10 dB step attenuator as indicated.
   c. Set the analyzer reference level as indicated.
   d. Set the analyzer input attenuation as indicated.
   e. Press **Single** and wait for the sweep to finish.
   f. Press **Peak Search** (or **Search**). The marker can still make a valid measurement, even though the signal may be slightly above the reference level for the first nominal amplitude setting.
   g. Record the marker (`Mkr1`) amplitude value as the Measured Amplitude in Table 2-128.

ManualsPlus.com

h. Calculate the amplitude accuracy as follows:

$$\text{Amplitude Accuracy} = \text{Measured Amplitude} - (\text{Amptd}_{0dB} - \text{ActualTotalAtten} + \text{RefAtten}_{40dB}) + 40dB$$

7. Table 2-128 has two Amplitude Accuracy entries for each nominal input amplitude setting. For each of the nominal input amplitude setting pairs in Table 2-128, record the worst of the two Amplitude Accuracy values in Table 2-129 and Table 2-130 as the 50 MHz Amplitude Accuracy for the same Nominal Input Amplitude setting.

Table 2-129 cdmaOne Receive Channel Power (Cellular Band) Preamp Off

Nominal Input Amplitude (dBm)	50 MHz Amplitude Accuracy (dB)	Input Attenuation (dB)	Peak to Peak Response (1.7 GHz to 2 GHz) (dB)	Uncertainty (dB)	cdmaOne Receive Channel Power Accuracy, Preamp Off Columns 2+4+5 (dB)
–40		0		0.24	25)
–60		0		0.24	26)
–70		0		0.24	27)
–80		0		0.24	28)
–85		0		0.24	29)

Table 2-130 cdmaOne Receive Channel Power (PCS Band) Preamp Off

Nominal Input Amplitude (dBm)	50 MHz Amplitude Accuracy (dB)	Input Attenuation (dB)	Peak to Peak Response (1.7 GHz to 2 GHz) (dB)	Uncertainty (dB)	cdmaOne Receive Channel Power Accuracy, Preamp Off Columns 2+4+5 (dB)
–40		0		0.24	30)
–60		0		0.24	31)
–70		0		0.24	32)
–80		0		0.24	33)
–85		0		0.24	34)

8. Copy into Table 2-129 and Table 2-130 the peak-to-peak frequency response error for the appropriate input attenuation setting from the Comms Frequency Response Performance Test for both the 800 MHz

ManualsPlus.com

to 1 GHz Cellular Band, and the 1.7 GHz to 2 GHz PCS Band measured in a 10 kHz resolution bandwidth with the preamplifier off.

9. For each Nominal Input Amplitude setting listed in Table 2-129, add the values for the 50 MHz Amplitude Accuracy (Column 2), the peak-to-peak response (Column 4), and the uncertainty (Column 5). Record the sum as the cdmaOne Receive Channel Power Accuracy (Column 6). Repeat this step for Table 2-130.
10. Record the worst-case cdmaOne Receive Channel Power Accuracy Result from Table 2-129 (Cellular band) in the test record as test record entry number 21.
11. Record the worst-case cdmaOne Receive Channel Power Accuracy Result from Table 2-130 (PCS band) in the test record as test record entry number 22.
12. If the analyzer has Option 1DS (preamplifier) installed, continue with Part 3. If the analyzer does not have Option 1DS, this test procedure is completed.

ManualsPlus.com

Part 3: cdmaOne Receive Channel Power (Preamplifier On)

This procedure applies only to analyzers with Option 1DS (preamplifier) installed.

Table 2-131 lists the reference level, input attenuation, and nominal input level for the analyzer, and nominal attenuation for the calibrated 1 dB and 10 dB step attenuators for the amplitude accuracy measurements.

Table 2-131 cdmaOne Receive Channel Power Preamp On (Option BAC)

Nominal Input Amplitude (dBm)	Reference Level (dBm)	Resolution Bandwidth (kHz)	Input Attenuation (dB)	1 dB Step Attenuator (dB)	10 dB Step Attenuator (dB)	Source Nominal Level (dBm)
–40	–20	10	0	0	40	0
–40	–40	10	0	0	40	0
–60	–40	10	0	0	60	0
–60	–60	10	0	0	60	0
–70	–50	10	0	0	70	0
–70	–70	10	0	0	70	0
–80	–60	10	0	0	80	0
–80	–80	10	0	0	80	0
–90	–70	10	0	0	90	0
–90	–90	10	0	0	90	0
–100	–80	10	0	0	100	0
–100	–100	10	0	0	100	0

1. Set the 10 dB step attenuator to 40 dB and the 1 dB step attenuator to 0 dB.
2. Obtain the actual attenuation for the 0 dB setting of each attenuator at 50 MHz from the metrology data for the step attenuators. In some cases this value might be zero, by definition. Add the two actual attenuations to obtain the 0 dB reference attenuation.

   $$\text{RefAtten}_{40\text{dB}} = 10\text{ dB Actual}_{40\text{dB}} + 1\text{ dB Actual}_{0\text{dB}}$$

   For example, if the actual attenuation for the 10 dB step attenuator at the 0 dB setting is 40.03 dB, then 10 dB $\text{Actual}_{40\text{dB}}$ is 40.03 dB. If the actual attenuation for the 1 dB step attenuator at the 0 dB setting is 0.02 dB, then 1 dB $\text{Actual}_{0\text{dB}}$ is 0.02 dB. In this case $\text{RefAtten}_{40\text{dB}}$ is 40.05 dB.
3. Obtain the metrology data for the step attenuators at 50 MHz.

ManualsPlus.com

4. Calculate the actual total attenuation by adding the actual attenuation for the 1 dB step attenuator to the actual attenuation for the 10 dB step attenuator for each total attenuation setting listed in Table 2-132.

NOTE The external attenuators and cables are now part of the "source."

Table 2-132 Amplitude Accuracy Worksheet

1 dB Step Attenuator		10 dB Step Attenuator		Total Attenuation		Ref Level	Nominal Input Amptd	Meas Amptd	Amptd Accy
Setting	Actual	Setting	Actual	Setting	Actual				
0 dB		40 dB		40 dB		–20 dBm	–40 dBm		
0 dB		40 dB		40 dB		–40 dBm	–40 dBm		
0 dB		60 dB		60 dB		–40 dBm	–60 dBm		
0 dB		60 dB		60 dB		–60 dBm	–60 dBm		
0 dB		70 dB		70 dB		–50 dBm	–70 dBm		
0 dB		70 dB		70 dB		–70 dBm	–70 dBm		
0 dB		80 dB		80 dB		–60 dBm	–80 dBm		
0 dB		80 dB		80 dB		–80 dBm	–80 dBm		
0 dB		90 dB		90 dB		–70 dBm	–90 dBm		
0 dB		90 dB		90 dB		–90 dBm	–90 dBm		
0 dB		100 dB		100 dB		–80 dBm	–100 dBm		
0 dB		100 dB		100 dB		–100 dBm	–100 dBm		

5. Set the analyzer as follows:

   FREQUENCY, Center Freq, 50 MHz
   SPAN, 0 kHz
   BW/Avg, Res BW, 10 kHz
   BW/Avg, Video BW, 10 kHz
   AMPLITUDE, More, Y-Axis Units (or Amptd Units), dBm
   AMPLITUDE, Ref Level, –20 dBm
   AMPLITUDE, Attenuation, 0 dB
   AMPLITUDE, More, Int Preamp On

6. Perform the following steps for each of the "Nominal Input Amplitude" values listed in Table 2-131.

   a. Set the 1 dB step attenuator as indicated.
   b. Set the 10 dB step attenuator as indicated.
   c. Set the analyzer reference level as indicated.
   d. Set the analyzer input attenuation as indicated.
   e. Press **Single** and wait for the sweep to finish.

ManualsPlus.com

f. Press **Peak Search** (or **Search**). The marker can still make a valid measurement, even though the signal may be slightly above the reference level for the first nominal amplitude setting.
g. Record the marker (`Mkr1`) amplitude value as the Measured Amplitude in Table 2-132.
h. Calculate the amplitude accuracy as follows:

$$\text{Amplitude Accuracy} = \text{Measured Amplitude} - (\text{Amptd}_{0dB} - \text{ActualTotalAtten} + \text{RefAtten}_{0dB}) + 40\text{dB}$$

7. Table 2-132 has two Amplitude Accuracy entries for each nominal input amplitude setting. For each of the nominal input amplitude setting pairs in Table 2-132, record the worst of the two Amplitude Accuracy values in Table 2-133 and Table 2-134 as the 50 MHz Amplitude Accuracy for the same Nominal Input Amplitude setting.

8. Copy into Table 2-133 and Table 2-134 the peak-to-peak frequency response error for the appropriate input attenuation setting from the Comms Frequency Response Performance Test for both the 800 MHz to 1 GHz Cellular Band, and the 1.7 GHz to 2 GHz PCS Band measured in a 10 kHz resolution bandwidth with the preamplifier on.

9. For each Nominal Input Amplitude setting listed in Table 2-133, add the values for the 50 MHz Amplitude Accuracy (Column 2), the peak-to-peak response (Column 4), and the uncertainty (Column 5). Record the sum as the cdmaOne Receive Channel Power Accuracy, Preamp On (Column 6). Repeat this step for Table 2-134.

10. Record the cdmaOne Receive Channel Power Accuracy, Preamplifier On Results from Table 2-133 and Table 2-134 into the test record as indicated by the test record entry in parenthesis.

11. This test procedure is now complete.

Table 2-133 cdmaOne Receive Channel Power (Cellular Band) Preamp On

Nominal Input Amplitude (dBm)	50 MHz Amplitude Accuracy (dB)	Input Attenuation (dB)	Peak to Peak Response (1.7 GHz to 2 GHz) (dB)	Uncertainty (dB)	cdmaOne Receive Channel Power Accuracy, Preamp On Columns 2+4+5 (dB)
–40		0		0.24	35)
–60		0		0.24	36)
–70		0		0.24	37)
–80		0		0.24	38)

ManualsPlus.com

Table 2-133 cdmaOne Receive Channel Power (Cellular Band) Preamp On

Nominal Input Amplitude (dBm)	50 MHz Amplitude Accuracy (dB)	Input Attenuation (dB)	Peak to Peak Response (1.7 GHz to 2 GHz) (dB)	Uncertainty (dB)	cdmaOne Receive Channel Power Accuracy, Preamp On Columns 2+4+5 (dB)
–90		0		0.24	39)
–100		0		0.24	40)

Table 2-134 cdmaOne Receive Channel Power (PCS Band) Preamp On

Nominal Input Amplitude (dBm)	50 MHz Amplitude Accuracy (dB)	Input Attenuation (dB)	Peak to Peak Response (1.7 GHz to 2 GHz) (dB)	Uncertainty (dB)	cdmaOne Receive Channel Power Accuracy, Preamp On Columns 2+4+5 (dB)
–40		0		0.24	41)
–60		0		0.24	42)
–70		0		0.24	43)
–80		0		0.24	44)
–90		0		0.24	45)
–100		0		0.24	46)

ManualsPlus.com

3 Performance Verification Test Records

ManualsPlus.com

Agilent E4401B Performance Verification Test Record

Tests for the Agilent E4401B only are included in this test record, therefore not all test numbers are included.

Table 3-1 Agilent E4401B Performance Verification Test Record

Agilent Technologies

Address: _____ Report No. _____

_____ Date _____

_____

Model E4401B

Serial No. _____ Ambient temperature _____° C

Options _____ Relative humidity_____%

Firmware Revision _____ Power mains line frequency _____ Hz (nominal)

Customer _____ Tested by _____

Test Equipment Used:

Description	Model No.	Trace No.	Cal Due Date
Synthesized Signal Generator	_____	_____	_____
Synthesized Sweeper	_____	_____	_____
Function Generator	_____	_____	_____
Power Meter, Dual-Channel	_____	_____	_____
RF Power Sensor #1	_____	_____	_____
RF Power Sensor #2 50 Ω Input (No Option 1DP)	_____	_____	_____
Low-Power Power Sensor	_____	_____	_____
75 Ω Power Sensor *(Option 1DP only)*	_____	_____	_____
Digital Multimeter	_____	_____	_____
Universal Counter	_____	_____	_____
Frequency Standard	_____	_____	_____
Power Splitter	_____	_____	_____

ManualsPlus.com

Table 3-1 Agilent E4401B Performance Verification Test Record

50 Ω Termination	_____	_____	_____
Minimum Loss Pad *(Option 1DP only)*	_____	_____	_____
1 dB Step Attenuator	_____	_____	_____
10 dB Step Attenuator	_____	_____	_____
Oscilloscope *(Option 1D6 only)*	_____	_____	_____
Microwave Spectrum Analyzer *(Option 1DN or 1DQ only)*	_____	_____	_____
Notes/comments:	_____		

Table 3-2 Agilent E4401B Performance Verification Test Record

Agilent Technologies					
Model E4401B			**Report No.** _____		
Serial No. _____			**Date** _____		
Test Description		**Minimum**	**Results Measured**	**Maximum**	**Measurement Uncertainty**
1.	**10 MHz Reference Output Accuracy** (*Non-Option 1D5 only*)				
	Settability	–5.0 Hz	(1)_____	5.0 Hz	±293.3 µHz
2.	**10 MHz High-Stability Frequency Reference Output Accuracy** (*Option 1D5 only*)				
	5 Minute Warm-Up Error	–0.1 ppm	(1)_____	0.1 ppm	±0.000072 ppm
	15 Minute Warm-Up Error	–0.01 ppm	(2)_____	0.01 ppm	±0.000070 ppm
3.	**Frequency Readout and Marker Frequency Count Accuracy**				
	Frequency Readout Accuracy				
	Center Freq Span				
	1490 MHz 20 MHz	1489.83 MHz	(1)_____	1490.17 MHz	±0 Hz

ManualsPlus.com

Table 3-2 Agilent E4401B Performance Verification Test Record

Agilent Technologies					
Model E4401B			**Report No. _____**		
Serial No. _____			**Date _____**		
Test Description		**Minimum**	**Results Measured**	**Maximum**	**Measurement Uncertainty**
	1490 MHz 10 MHz	1489.91 MHz	(2)_____	1490.09 MHz	±0 Hz
	1490 MHz 1 MHz	1489.991 MHz	(3)_____	1490.009 MHz	±0 Hz
	Marker Count Accuracy				
	Center Freq Span				
	1490 MHz 10 MHz	1489.999999 MHz	(4)_____	1490.000001 MHz	±0 Hz
	1490 MHz 1 MHz	1489.999999 MHz	(5)_____	1490.000001 MHz	±0 Hz
5.	**Frequency Span Accuracy**				
	Span Start Freq				
	1500 MHz 0 Hz	1185 MHz	(1)_____	1215 MHz	±3.06 MHz
	100 MHz 10 MHz	79 MHz	(2)_____	81 MHz	±204 kHz
	100 kHz 10 MHz	79 kHz	(3)_____	81 kHz	±204 Hz
	100 MHz 800 MHz	79 MHz	(4)_____	81 MHz	±204 kHz
	100 kHz 800 MHz	79 kHz	(5)_____	81 kHz	±204 Hz
	100 MHz 1400 MHz	79 MHz	(6)_____	81 MHz	±204 kHz
	100 kHz 1499 MHz	79 kHz	(7)_____	81 kHz	±204 Hz
7.	**Noise Sidebands**				
	Offset from 1 GHz signal				
	10 kHz		(1)_____	–93 dBc/Hz	±2.44 dB
	20 kHz		(2)_____	–100 dBc/Hz	±2.44 dB
	30 kHz		(3)_____	–104 dBc/Hz	±2.44 dB
	100 kHz		(4)_____	–113 dBc/Hz	±2.44 dB
9.	**System-Related Sidebands**				

ManualsPlus.com

Table 3-2 Agilent E4401B Performance Verification Test Record

Agilent Technologies					
Model E4401B			**Report No. _____**		
Serial No. _____			**Date _____**		
Test Description		**Minimum**	**Results Measured**	**Maximum**	**Measurement Uncertainty**
	Offset from 500 MHz signal				
	30 kHz to 230 kHz		(1)_____	–65 dBc	±1.3 dB
	–30 kHz to –230 kHz		(2)_____	–65 dBc	±1.3 dB
10.	**Residual FM**				
	1 kHz Res BW, (*Non-Option 1D5)*		(1)_____	150 Hz	±21 Hz
	1 kHz Res BW, (*Option 1D5)*		(1)_____	100 Hz	±21 Hz
	10 Hz Res BW (*Options 1DR and 1D5 only*)		(2)_____	2 Hz	±0.27 Hz
11.	**Sweep Time Accuracy**				
	Sweep Time				
	5 ms	–1.0%	(1)_____	±1.0%	±0.16%
	20 ms	–1.0%	(2)_____	±1.0%	±0.16%
	100 ms	–1.0%	(3)_____	±1.0%	±0.16%
	1 s	–1.0%	(4)_____	±1.0%	±0.16%
	10 s	–1.0%	(5)_____	±1.0%	±0.16%
	1 ms (*Option AYX only)*	–1.0%	(6)_____	±1.0%	±0.16%
	500 µs (*Option AYX only)*	–1.0%	(7)_____	±1.0%	±0.16%
	100 µs (*Option AYX only)*	–1.0%	(8)_____	±1.0%	±0.16%
12.	**Display Scale Fidelity**				
	Cumulative Log Fidelity, Res BW ≥1 kHz				
	dB from Ref Level				
	–4	–0.30 dB	(1)_____	0.30 dB	±0.082 dB
	–8	–0.30 dB	(2)_____	0.30 dB	±0.078 dB

ManualsPlus.com

Table 3-2 Agilent E4401B Performance Verification Test Record

Agilent Technologies					
Model E4401B			**Report No. _____**		
Serial No. _____			**Date _____**		
Test Description		**Minimum**	**Results Measured**	**Maximum**	**Measurement Uncertainty**
	–12	–0.40 dB	(3)_____	0.40 dB	±0.075 dB
	–16	–0.40 dB	(4)_____	0.40 dB	±0.073 dB
	–20	–0.40 dB	(5)_____	0.40 dB	±0.078 dB
	–24	–0.50 dB	(6)_____	0.50 dB	±0.074 dB
	–28	–0.50 dB	(7)_____	0.50 dB	±0.073 dB
	–32	–0.60 dB	(8)_____	0.60 dB	±0.077 dB
	–36	–0.60 dB	(9)_____	0.60 dB	±0.075 dB
	–40	–0.60 dB	(10)_____	0.60 dB	±0.081 dB
	–44	–0.70 dB	(11)_____	0.70 dB	±0.077 dB
	–48	–0.70 dB	(12)_____	0.70 dB	±0.076 dB
	–52	–0.70dB	(13)_____	0.70 dB	±0.080 dB
	–56	–0.70 dB	(14)_____	0.70 dB	±0.078 dB
	–60	–0.70 dB	(15)_____	0.70 dB	±0.084 dB
	–64	–0.80 dB	(16)_____	0.80 dB	±0.081 dB
	–68	–0.80 dB	(17)_____	0.80 dB	±0.080 dB
	–72	–0.80 dB	(18)_____	0.80 dB	±0.084 dB
	–76	–0.80 dB	(19)_____	0.80 dB	±0.083 dB
	–80	–0.80 dB	(20)_____	0.80 dB	±0.089 dB
	–84	–1.15 dB	(21)_____	1.15 dB	±0.086 dB
	Incremental Log Fidelity, Res BW ≥1 kHz				
	dB from Ref Level				
	–4	–0.4 dB	(22)_____	0.4 dB	±0.082 dB
	–8	–0.4 dB	(23)_____	0.4 dB	±0.078 dB
	–12	–0.4 dB	(24)_____	0.4 dB	±0.075 dB
	–16	–0.4 dB	(25)_____	0.4 dB	±0.073 dB

ManualsPlus.com

Table 3-2 Agilent E4401B Performance Verification Test Record

Agilent Technologies					
Model E4401B			**Report No. _____**		
Serial No. _____			**Date _____**		
Test Description		**Minimum**	**Results Measured**	**Maximum**	**Measurement Uncertainty**
	–20	–0.4 dB	(26)_____	0.4 dB	±0.078 dB
	–24	–0.4 dB	(27)_____	0.4 dB	±0.074 dB
	–28	–0.4 dB	(28)_____	0.4 dB	±0.073 dB
	–32	–0.4 dB	(29)_____	0.4 dB	±0.077 dB
	–36	–0.4 dB	(30)_____	0.4 dB	±0.075 dB
	–40	–0.4 dB	(31)_____	0.4 dB	±0.081 dB
	–44	–0.4 dB	(32)_____	0.4 dB	±0.077 dB
	–48	–0.4 dB	(33)_____	0.4 dB	±0.076 dB
	–52	–0.4 dB	(34)_____	0.4 dB	±0.080 dB
	–56	–0.4 dB	(35)_____	0.4 dB	±0.078 dB
	–60	–0.4 dB	(36)_____	0.4 dB	±0.084 dB
	–64	–0.4 dB	(37)_____	0.4 dB	±0.081 dB
	–68	–0.4 dB	(38)_____	0.4 dB	±0.080 dB
	–72	–0.4 dB	(39)_____	0.4 dB	±0.084 dB
	–76	–0.4 dB	(40)_____	0.4 dB	±0.083 dB
	–80	–0.4 dB	(41)_____	0.4 dB	±0.089 dB
	Cumulative Log Fidelity, Res BW ≤300 Hz *(Option 1DR only)*				
	dB from Ref Level				
	–4	–0.34 dB	(43)_____	0.34 dB	±0.082 dB
	–8	–0.38 dB	(44)_____	0.38 dB	±0.078 dB
	–12	–0.42 dB	(45)_____	0.42 dB	±0.075 dB
	–16	–0.46 dB	(46)_____	0.46 dB	±0.073 dB
	–20	–0.50 dB	(47)_____	0.50 dB	±0.078 dB

ManualsPlus.com

Table 3-2 Agilent E4401B Performance Verification Test Record

Agilent Technologies					
Model E4401B			**Report No. _____**		
Serial No. _____			**Date _____**		
Test Description		**Minimum**	**Results Measured**	**Maximum**	**Measurement Uncertainty**
	–24	–0.54 dB	(48)_____	0.54 dB	±0.074 dB
	–28	–0.58 dB	(49)_____	0.58 dB	±0.073 dB
	–32	–0.62 dB	(50)_____	0.62 dB	±0.077 dB
	–36	–0.66 dB	(51)_____	0.66 dB	±0.075 dB
	–40	–0.70 dB	(52)_____	0.70 dB	±0.081 dB
	–44	–0.74 dB	(53)_____	0.74 dB	±0.077 dB
	–48	–0.78 dB	(54)_____	0.78 dB	±0.076 dB
	–52	–0.82 dB	(55)_____	0.82 dB	±0.080 dB
	–56	–0.86 dB	(56)_____	0.86 dB	±0.078 dB
	–60	–0.90 dB	(57)_____	0.90 dB	±0.084 dB
	–64	–0.94 dB	(58)_____	0.94 dB	±0.081 dB
	–68	–0.98 dB	(59)_____	0.98 dB	±0.080 dB
	–72	–1.02 dB	(60)_____	1.02 dB	±0.084 dB
	–76	–1.06 dB	(61)_____	1.06 dB	±0.083 dB
	–80	–1.10 dB	(62)_____	1.10 dB	±0.089 dB
	–84	–1.14 dB	(63)_____	1.14 dB	±0.086 dB
	–88	–1.18 dB	(64)_____	1.18 dB	±0.085 dB
	–92	–1.22 dB	(65)_____	1.22 dB	±0.100 dB
	–96	–1.26 dB	(66)_____	1.26 dB	±0.099 dB
	–98	–1.28 dB	(67)_____	1.28 dB	±0.098 dB
	Incremental Log Fidelity, Res BW ≤300 Hz *(Option 1DR only)*				
	dB from Ref Level				
	–4	–0.4 dB	(68)_____	0.4 dB	±0.082 dB
	–8	–0.4 dB	(69)_____	0.4 dB	±0.078 dB

ManualsPlus.com

Table 3-2 Agilent E4401B Performance Verification Test Record

Agilent Technologies					
Model E4401B			**Report No. _____**		
Serial No. _____			**Date _____**		
Test Description		**Minimum**	**Results Measured**	**Maximum**	**Measurement Uncertainty**
	–12	–0.4 dB	(70)_____	0.4 dB	±0.075 dB
	–16	–0.4 dB	(71)_____	0.4 dB	±0.073 dB
	–20	–0.4 dB	(72)_____	0.4 dB	±0.078 dB
	–24	–0.4 dB	(73)_____	0.4 dB	±0.074 dB
	–28	–0.4 dB	(74)_____	0.4 dB	±0.073 dB
	–32	–0.4 dB	(75)_____	0.4 dB	±0.077 dB
	–36	–0.4 dB	(76)_____	0.4 dB	±0.075 dB
	–40	–0.4 dB	(77)_____	0.4 dB	±0.081 dB
	–44	–0.4 dB	(78)_____	0.4 dB	±0.077 dB
	–48	–0.4 dB	(79)_____	0.4 dB	±0.076 dB
	–52	–0.4 dB	(80)_____	0.4 dB	±0.080 dB
	–56	–0.4 dB	(81)_____	0.4 dB	±0.078 dB
	–60	–0.4 dB	(82)_____	0.4 dB	±0.084 dB
	–64	–0.4 dB	(83)_____	0.4 dB	±0.081 dB
	–68	–0.4 dB	(84)_____	0.4 dB	±0.080 dB
	–72	–0.4 dB	(85)_____	0.4 dB	±0.084 dB
	–76	–0.4 dB	(86)_____	0.4 dB	±0.083 dB
	–80	–0.4 dB	(87)_____	0.4 dB	±0.089 dB
	Linear Fidelity, Res BW ≥1 kHz				
	dB from Ref Level				
	–4	–2.0%	(93)_____	2.0%	±0.064%
	–8	–2.0%	(94)_____	2.0%	±0.064%
	–12	–2.0%	(95)_____	2.0%	±0.064%
	–16	–2.0%	(96)_____	2.0%	±0.064%

ManualsPlus.com

Table 3-2 Agilent E4401B Performance Verification Test Record

Agilent Technologies					
Model E4401B			**Report No. _____**		
Serial No. _____			**Date _____**		
Test Description		**Minimum**	**Results Measured**	**Maximum**	**Measurement Uncertainty**
	–20	–2.0%	(97)_____	2.0%	±0.063%
	Linear Fidelity, Res BW ≤300 Hz *(Option 1DR only)*				
	dB from Ref Level				
	–4	–2.0%	(98)_____	2.0%	±0.064%
	–8	–2.0%	(99)_____	2.0%	±0.064%
	–12	–2.0%	(100)_____	2.0%	±0.064%
	–16	–2.0%	(101)_____	2.0%	±0.064%
	–20	–2.0%	(102)_____	2.0%	±0.063%
	Zero Span, Res BW ≤300 Hz *(Option 1DR only)*				
	dB from Ref Level				
	–4	–0.36 dB	(103)_____	0.36 dB	±0.082 dB
	–8	–0.42 dB	(104)_____	0.42 dB	±0.078 dB
	–12	–0.48 dB	(105)_____	0.48 dB	±0.075 dB
	–16	–0.54 dB	(106)_____	0.54 dB	±0.073 dB
	–20	–0.60 dB	(107)_____	0.60 dB	±0.078 dB
	–24	–0.66 dB	(108)_____	0.66 dB	±0.074 dB
	–28	–0.72 dB	(109)_____	0.72 dB	±0.073 dB
	–32	–0.78 dB	(110)_____	0.78 dB	±0.077 dB
	–36	–0.84 dB	(111)_____	0.84 dB	±0.075 dB
	–40	–0.90 dB	(112)_____	0.90 dB	±0.081 dB
	–44	–0.96 dB	(113)_____	0.96 dB	±0.077 dB
	–48	–1.02 dB	(114)_____	1.02 dB	±0.076 dB
	–52	–1.08 dB	(115)_____	1.08 dB	±0.080 dB

ManualsPlus.com

Table 3-2 Agilent E4401B Performance Verification Test Record

Agilent Technologies					
Model E4401B			**Report No. _____**		
Serial No. _____			**Date _____**		
Test Description		**Minimum**	**Results Measured**	**Maximum**	**Measurement Uncertainty**
	–56	–1.14 dB	(116)_____	1.14 dB	±0.078 dB
	–60	–1.20 dB	(117)_____	1.20 dB	±0.084 dB
	–64	–1.5 dB	(118)_____	1.5 dB	±0.081 dB
	–68	–1.5 dB	(119)_____	1.5 dB	±0.080 dB
	–70	–1.5 dB	(120)_____	1.5 dB	±0.084 dB
13.	**Input Attenuation Switching Uncertainty**				
	Input Attenuation Setting				
	0 dB	–0.3 dB	(1)_____	0.3 dB	±0.101 dB
	5 dB	–0.3 dB	(2)_____	0.3 dB	±0.104 dB
	15 dB	–0.3 dB	(3)_____	0.3 dB	±0.102 dB
	20 dB	–0.3 dB	(4)_____	0.3 dB	±0.098 dB
	25 dB	–0.35 dB	(5)_____	0.35 dB	±0.098 dB
	30 dB	–0.40 dB	(6)_____	0.40 dB	±0.096 dB
	35 dB	–0.45 dB	(7)_____	0.45 dB	±0.099 dB
	40 dB	–0.50 dB	(8)_____	0.50 dB	±0.096 dB
	45 dB	–0.55 dB	(9)_____	0.55 dB	±0.099 dB
	50 dB	–0.60 dB	(10)_____	0.60 dB	±0.095 dB
	55 dB	–0.65 dB	(11)_____	0.65 dB	±0.099 dB
	60 dB	–0.70 dB	(12)_____	0.70 dB	±0.100 dB
14.	**Reference Level Accuracy**				
	Log, Res BW ≥1 kHz				
	Reference Level				
	50 Ω (dBm) 75 Ω (dBmV)				
	–15 33.75	–0.3 dB	(1)_____	0.3 dB	±0.091 dB

ManualsPlus.com

Table 3-2 Agilent E4401B Performance Verification Test Record

Agilent Technologies					
Model E4401B			**Report No. _____**		
Serial No. _____			**Date _____**		
Test Description		**Minimum**	**Results Measured**	**Maximum**	**Measurement Uncertainty**
	–5 43.75	–0.3 dB	(2)_____	0.3 dB	±0.100 dB
	–35 13.75	–0.3 dB	(3)_____	0.3 dB	±0.092 dB
	–45 3.75	–0.3 dB	(4)_____	0.3 dB	±0.094 dB
	–55 –6.25	–0.5 dB	(5)_____	0.5 dB	±0.095 dB
	–65 –16.25	–0.5 dB	(6)_____	0.5 dB	±0.097 dB
	–75 –26.25	–0.7 dB	(7)_____	0.7 dB	±0.099 dB
	Linear, Res BW ≤300 Hz				
	Reference Level				
	50 Ω (dBm) 75 Ω (dBmV)				
	–15 33.75	–0.3 dB	(8)_____	0.3 dB	±0.091 dB
	–5 43.75	–0.3 dB	(9)_____	0.3 dB	±0.100 dB
	–35 13.75	–0.3 dB	(10)_____	0.3 dB	±0.092 dB
	–45 3.75	–0.3 dB	(11)_____	0.3 dB	±0.094 dB
	–55 –6.25	–0.5 dB	(12)_____	0.5 dB	±0.095 dB
	–65 –16.25	–0.5 dB	(13)_____	0.5 dB	±0.097 dB
	–75 –26.25	–0.7 dB	(14)_____	0.7 dB	±0.099 dB
	Log, Res BW ≤300 Hz *(Option 1DR only)*				
	Reference Level				
	50 Ω (dBm) 75 Ω (dBmV)				
	–15 33.75	–0.3 dB	(15)_____	0.3 dB	±0.091 dB
	–5 43.75	–0.3 dB	(16)_____	0.3 dB	±0.100 dB
	–35 13.75	–0.3 dB	(17)_____	0.3 dB	±0.092 dB
	–45 3.75	–0.3 dB	(18)_____	0.3 dB	±0.094 dB
	–55 –6.25	–0.5 dB	(19)_____	0.5 dB	±0.095 dB
	–65 –16.25	–0.5 dB	(20)_____	0.5 dB	±0.097 dB

ManualsPlus.com

Table 3-2 Agilent E4401B Performance Verification Test Record

Agilent Technologies					
Model E4401B			**Report No. _____**		
Serial No. _____			**Date _____**		
Test Description		**Minimum**	**Results Measured**	**Maximum**	**Measurement Uncertainty**
	–75 –26.25	–0.7 dB	(21)_____	0.7 dB	±0.099 dB
	Linear, Res BW ≤300 Hz *(Option 1DR only)*				
	Reference Level				
	50 Ω (dBm) 75 Ω (dBmV)				
	–15 33.75	–0.3 dB	(22)_____	0.3 dB	±0.091 dB
	–5 43.75	–0.3 dB	(23)_____	0.3 dB	±0.100 dB
	–35 13.75	–0.3 dB	(24)_____	0.3 dB	±0.092 dB
	–45 3.75	–0.3 dB	(25)_____	0.3 dB	±0.094 dB
	–55 –6.25	–0.5 dB	(26)_____	0.5 dB	±0.095 dB
	–65 –16.25	–0.5 dB	(27)_____	0.5 dB	±0.097 dB
	–75 –26.25	–0.7 dB	(28)_____	0.7 dB	±0.099 dB
16.	**Resolution Bandwidth Switching Uncertainty**				
	Resolution Bandwidth				
	3 kHz	–0.3 dB	(1)_____	0.3 dB	±0.048 dB
	9 kHz	–0.3 dB	(2)_____	0.3 dB	±0.048 dB
	10 kHz	–0.3 dB	(3)_____	0.3 dB	±0.048 dB
	30 kHz	–0.3 dB	(4)_____	0.3 dB	±0.048 dB
	100 kHz	–0.3 dB	(5)_____	0.3 dB	±0.048 dB
	120 kHz	–0.3 dB	(6)_____	0.3 dB	±0.048 dB
	300 kHz	–0.3 dB	(7)_____	0.3 dB	±0.048 dB
	1 MHz	–0.3 dB	(8)_____	0.3 dB	±0.048 dB
	3 MHz	–0.3 dB	(9)_____	0.3 dB	±0.048 dB
	5 MHz	–0.6 dB	(10)_____	0.6 dB	±0.076 dB
	300 Hz *(Option 1DR only)*	–0.3 dB	(11)_____	0.3 dB	±0.048 dB

ManualsPlus.com

Table 3-2 Agilent E4401B Performance Verification Test Record

Agilent Technologies					
Model E4401B			**Report No. _____**		
Serial No. _____			**Date _____**		
Test Description		**Minimum**	**Results Measured**	**Maximum**	**Measurement Uncertainty**
	200 Hz *(Option 1DR only)*	–0.3 dB	(12)_____	0.3 dB	±0.048 dB
	100 Hz *(Option 1DR only)*	–0.3 dB	(13)_____	0.3 dB	±0.048 dB
	30 Hz *(Option 1DR only)*	–0.3 dB	(14)_____	0.3 dB	±0.048 dB
	10 Hz *(Option 1DR only)*	–0.3 dB	(15)_____	0.3 dB	±0.048 dB
	3 Hz *(Option 1DR and 1D5 only)* Firmware Revision A.08.00 or later	–0.3 dB	(16)_____	0.3 dB	±0.048 dB
	1Hz *(Option 1DR and 1D5 only)* Firmware Revision A.08.00 or later	–0.3 dB	(17)_____	0.3 dB	±0.048 dB
17.	**Absolute Amplitude Accuracy (Reference Settings)**				
	Log, Preamp Off	–0.30 dB	(1)_____	0.30 dB	±0.09 dB
	Lin, Preamp Off	–0.30 dB	(2)_____	0.30 dB	±0.09 dB
	Log, Preamp On *(Option 1DS only)*	–0.37 dB	(3)_____	0.37 dB	±0.09 dB
	Lin, Preamp On *(Option 1DS only)*	–0.37 dB	(4)_____	0.37 dB	±0.09 dB
19.	**Overall Absolute Amplitude Accuracy**				
	0 dBm Reference Level				
	0 dBm input	–0.54 dB	(1)_____	0.54 dB	±0.234 dB
	–10 dBm input	–0.54 dB	(2)_____	0.54 dB	±0.115 dB
	–20 dBm input	–0.54 dB	(3)_____	0.54 dB	±0.110 dB
	–30 dBm input	–0.54 dB	(4)_____	0.54 dB	±0.109 dB
	–40 dBm input	–0.54 dB	(5)_____	0.54 dB	±0.109 dB
	–50 dBm input	–0.54 dB	(6)_____	0.54 dB	±0.109 dB
	–20 dBm Reference Level				

ManualsPlus.com

Table 3-2 Agilent E4401B Performance Verification Test Record

Agilent Technologies					
Model E4401B			**Report No. _____**		
Serial No. _____			**Date _____**		
Test Description		**Minimum**	**Results Measured**	**Maximum**	**Measurement Uncertainty**
	–20 dBm input	–0.54 dB	(7)_____	0.54 dB	±0.109 dB
	–30 dBm input	–0.54 dB	(8)_____	0.54 dB	±0.109 dB
	–40 dBm input	–0.54 dB	(9)_____	0.54 dB	±0.109 dB
	–50 dBm input	–0.54 dB	(10)_____	0.54 dB	±0.109 dB
	–40 dBm Reference Level				
	–40 dBm input	–0.54 dB	(11)_____	0.54 dB	±0.087 dB
	–50 dBm input	–0.54 dB	(12)_____	0.54 dB	±0.087 dB
	–50 dBm Reference Level				
	–50 dBm input	–0.54 dB	(13)_____	0.54 dB	±0.087 dB
21.	**Resolution Bandwidth Accuracy**				
	Resolution Bandwidth				
	5 MHz	3.5 MHz	(1)_____	6.5 MHz	±110 kHz
	3 MHz	2.55 MHz	(2)_____	3.45 MHz	±66 kHz
	1 MHz	0.85 MHz	(3)_____	1.15 MHz	±22 kHz
	300 kHz	255 kHz	(4)_____	345 kHz	±6.6 kHz
	100 kHz	85 kHz	(5)_____	115 kHz	±2.2 kHz
	30 kHz	25.5 kHz	(6)_____	34.5 kHz	±660 Hz
	10 kHz	8.5 kHz	(7)_____	11.5 kHz	±220 Hz
	3 kHz	2.55 kHz	(8)_____	3.45 kHz	±66 Hz
	1 kHz	850 Hz	(9)_____	1.15 kHz	±22 Hz
	120 kHz	96 kHz	(10)_____	144 kHz	±2.17 kHz
	9 kHz	7.2 kHz	(11)_____	10.8 kHz	±163 Hz
22.	**Frequency Response**	Note: Enter data in the appropriate section below depending upon the ambient temperature at which the test was performed and installed options.			

ManualsPlus.com

Table 3-2 Agilent E4401B Performance Verification Test Record

Agilent Technologies					
Model E4401B			**Report No. _____**		
Serial No. _____			**Date _____**		
Test Description		**Minimum**	**Results Measured**	**Maximum**	**Measurement Uncertainty**
	20 to 30° C				
	50 Ω Input (Non-Option 1DP) (9 kHz to 1.5 GHz)				
	Maximum Response		(1)_____	0.50 dB	±0.19 dB
	Minimum Response	–0.50 dB	(2)_____		±0.19 dB
	Peak-to-Peak Response		(3)_____	1.0 dB	±0.19 dB
	Option 1DP (75 Ω) Band 0 (1 MHz to 1.5 GHz)				
	Maximum Response		(1)_____	0.50 dB	±0.11 dB
	Minimum Response	–0.50 dB	(2)_____		±0.11 dB
	Peak-to-Peak Response		(3)_____	1.0 dB	±0.11 dB
	0 to 55° C				
	50 Ω Input (Non-Option 1DP) (9 kHz to 1.5 GHz)				
	Maximum Response		(1)_____	1.0 dB	±0.19 dB
	Minimum Response	–1.0 dB	(2)_____		±0.19 dB
	Peak-to-Peak Response		(3)_____	2.0 dB	±0.19 dB
	Option 1DP (75 Ω)				
	(1 MHz to 1.5 GHz)				
	Maximum Response		(1)_____	1.0 dB	±0.11 dB
	Minimum Response	–1.0 dB	(2)_____		±0.11 dB
	Peak-to-Peak Response		(3)_____	2.0 dB	±0.11 dB

ManualsPlus.com

Table 3-2 Agilent E4401B Performance Verification Test Record

Agilent Technologies					
Model E4401B			**Report No. _____**		
Serial No. _____			**Date _____**		
Test Description		**Minimum**	**Results Measured**	**Maximum**	**Measurement Uncertainty**
25.	**Frequency Response (Preamp On)** *(Option 1DS only)*	Note: Enter data in the appropriate section below depending upon the ambient temperature at which the test was performed and installed options.			
	20 to 30° C				
	50 Ω Input (No Option 1DP) (100 kHz to 1.5 GHz)				
	Maximum Response		(1)_____	1.0 dB	±0.28 dB
	Minimum Response	–1.0 dB	(2)_____		±0.28 dB
	Peak-to-Peak Response		(3)_____	2.0 dB	±0.28 dB
	Option 1DP (75 Ω) (1 MHz to 1.5 GHz)				
	Maximum Response		(1)_____	1.50 dB	±0.28 dB
	Minimum Response	–1.50 dB	(2)_____		±0.28 dB
	Peak-to-Peak Response		(3)_____	3.0 dB	±0.28 dB
	0 to 55° C				
	50 Ω Input (No Option 1DP) (100 kHz to 1.5 GHz)				
	Maximum Response		(1)_____	1.5 dB	±0.28 dB
	Minimum Response	–1.5 dB	(2)_____		±0.28 dB
	Peak-to-Peak Response		(3)_____	3.0 dB	±0.28 dB
	Option 1DP (75 Ω) (1 MHz to 1.5 GHz)				
	Maximum Response		(1)_____	2.0 dB	±0.28 dB
	Minimum Response	–2.0 dB	(2)_____		±0.28 dB

ManualsPlus.com

Table 3-2 Agilent E4401B Performance Verification Test Record

Agilent Technologies					
Model E4401B			**Report No. _____**		
Serial No. _____			**Date _____**		
Test Description		**Minimum**	**Results Measured**	**Maximum**	**Measurement Uncertainty**
	Peak-to-Peak Response		(3)_____	4.0 dB	±0.28 dB
28.	**Other Input-Related Spurious Responses**				
	Input Frequency				
	542.8 MHz		(1)_____	–65 dBc	±0.889 dB
	510.7 MHz		(2)_____	–65 dBc	±0.889 dB
	1310.7 MHz		(3)_____	–45 dBc	±0.889 dB
30.	**Spurious Responses**	Note: Enter data in the appropriate section below depending upon the input impedance and serial number of the analyzer.			
	50 MHz TOI, 1 kHz RBW, 50 Ω (Serial Number less than US39440413)	10 dBm	(1)_____		±0.93 dB
	50 MHz TOI, 1 kHz RBW, 50 Ω (Serial Number US39440413 or greater)	13.5 dBm	(1)_____		±0.93 dB
	50 MHz TOI, 1 kHz RBW, 75 Ω	58.75 dBmV	(1)_____		±0.93 dB
	50 MHz TOI, 30 Hz RBW, 50 Ω (*Option 1DR only)* (Serial Number less than US39440413)	10 dBm	(2)_____		±0.93 dB
	50 MHz TOI, 30 Hz RBW, 50 Ω (*Option 1DR only)* (Serial Number US39440413 or greater)	13.5 dBm	(2)_____		±0.93 dB
	50 MHz TOI, 30 Hz RBW, 75 Ω (*Option 1DR only)*	58.75 dBmV	(2)_____		±0.93 dB
	40 MHz SHI, 50 Ω	35 dBm	(3)_____		±0.50 dB
	40 MHz SHI, 75 Ω	83.75 dBmV	(3)_____		±0.50 dB
33.	**Gain Compression**				
	Test Frequency				

ManualsPlus.com

Table 3-2 Agilent E4401B Performance Verification Test Record

Agilent Technologies					
Model E4401B			**Report No. _____**		
Serial No. _____			**Date _____**		
Test Description		**Minimum**	**Results Measured**	**Maximum**	**Measurement Uncertainty**
	53 MHz		(1)_____	1.0 dB	±0.123 dB
	50.004 MHz (*Option 1DR only*)		(2)_____	1.0 dB	±0.123 dB
	1403 MHz		(3)_____	1.0 dB	±0.123 dB
35.	**Displayed Average Noise Level**	Note: Enter data in the appropriate section below depending upon the input impedance and serial number of the analyzer.			
	50 Ω, 1 kHz RBW, Preamp Off				
	400 kHz		(1)_____	–115 dBm	±1.23 dB
	1 MHz to 10 MHz		(2)_____	–115 dBm	±1.23 dB
	10 MHz to 500 MHz		(3)_____	–119 dBm	±1.23 dB
	500 MHz to 1 GHz		(4)_____	–117 dBm	±1.23 dB
	1 GHz to 1.5 GHz		(5)_____	–114 dBm	±1.23 dB
	50 Ω, 1 kHz RBW, Preamp On				
	400 kHz		(6)_____	–131 dBm	±1.23 dB
	1 MHz to 10 MHz		(7)_____	–131 dBm	±1.23 dB
	10 MHz to 500 MHz		(8)_____	–135 dBm	±1.23 dB
	500 MHz to 1 GHz		(9)_____	–133 dBm	±1.23 dB
	1 GHz to 1.5 GHz		(10)_____	–131 dBm	±1.23 dB
	50 Ω, 10 Hz RBW, Preamp Off				
	400 kHz		(11)_____	–134 dBm	±1.23 dB
	1 MHz to 10 MHz		(12)_____	–134 dBm	±1.23 dB
	10 MHz to 500 MHz		(13)_____	–138 dBm	±1.23 dB
	500 MHz to 1 GHz		(14)_____	–136 dBm	±1.23 dB
	1 GHz to 1.5 GHz		(15)_____	–133 dBm	±1.23 dB

ManualsPlus.com

Table 3-2 Agilent E4401B Performance Verification Test Record

Agilent Technologies					
Model E4401B			**Report No. _____**		
Serial No. _____			**Date _____**		
Test Description		**Minimum**	**Results Measured**	**Maximum**	**Measurement Uncertainty**
	50 Ω, 10 Hz RBW, Preamp On				
	400 kHz		(16)_____	–150 dBm	±1.23 dB
	1 MHz to 10 MHz		(17)_____	–150 dBm	±1.23 dB
	10 MHz to 500 MHz		(18)_____	–154 dBm	±1.23 dB
	500 MHz to 1 GHz		(19)_____	–152 dBm	±1.23 dB
	1 GHz to 1.5 GHz		(20)_____	–150 dBm	±1.23 dB
	75 Ω, 1 kHz RBW, Preamp Off				
	1 MHz to 10 MHz		(21)_____	–64 dBmV	±1.23 dB
	10 MHz to 500 MHz		(22)_____	–66 dBmV	±1.23 dB
	500 MHz to 1 GHz		(23)_____	–60 dBmV	±1.23 dB
	1 GHz to 1.5 GHz		(24)_____	–56 dBmV	±1.23 dB
	75 Ω, 1 kHz RBW, Preamp On:				
	1 MHz to 10 MHz		(25)_____	–80 dBmV	±1.23 dB
	10 MHz to 500 MHz		(26)_____	–81 dBmV	±1.23 dB
	500 MHz to 1 GHz		(27)_____	–81 dBmV	±1.23 dB
	1 GHz to 1.5 GHz		(28)_____	–75 dBmV	±1.23 dB
	75 Ω, 10 Hz RBW, Preamp Off				
	1 MHz to 10 MHz		(29)_____	–83 dBmV	±1.23 dB
	10 MHz to 500 MHz		(30)_____	–85 dBmV	±1.23 dB
	500 MHz to 1 GHz		(31)_____	–79 dBmV	±1.23 dB
	1 GHz to 1.5 GHz		(32)_____	–75 dBmV	±1.23 dB
	75 Ω, 10 Hz RBW, Preamp On:				

ManualsPlus.com

Table 3-2 Agilent E4401B Performance Verification Test Record

Agilent Technologies					
Model E4401B			**Report No. _____**		
Serial No. _____			**Date _____**		
Test Description		**Minimum**	**Results Measured**	**Maximum**	**Measurement Uncertainty**
	1 MHz to 10 MHz		(33)_____	–99 dBmV	±1.23 dB
	10 MHz to 500 MHz		(34)_____	–100 dBmV	±1.23 dB
	500 MHz to 1 GHz		(35)_____	–100 dBmV	±1.23 dB
	1 GHz to 1.5 GHz		(36)_____	–94 dBmV	±1.23 dB
39.	**Residual Responses**	Note: Enter data in the appropriate section below depending upon the input impedance and serial number of the analyzer.			
	50 Ω, 150 kHz to 1.5 GHz		(1)_____	–90 dBm	±0.87 dB
	75 Ω, 1 MHz to 1.5 GHz		(1)_____	–36 dBmV	±0.87 dB
40.	**Fast Time Domain Amplitude Accuracy** *(Option AYX only)*				
	Amplitude Error	–0.3%	(1)_____	0.3%	±0.029%
41.	**Tracking Generator Absolute Amplitude and Vernier Accuracy**	Note: Enter data in the appropriate section below depending upon the input impedance and serial number of the analyzer.			
	(Option 1DN or Option 1DQ only)				
	Absolute Amplitude Accuracy	–0.5 dB	(1)_____	0.5 dB	±0.096 dB
	Positive Vernier Accuracy		(2)_____	0.75 dB	±0.008 dB
	Negative Vernier Accuracy	–0.75 dB	(3)_____		±0.008 dB
	Power Sweep Accuracy		(4)_____	1.5 dB	±0.008 dB
	75 Ω *(Option 1DQ)*				
	Absolute Amplitude Accuracy	–1.5 dB	(1)_____	1.5 dB	±0.096 dB
	Positive Vernier Accuracy		(2)_____	0.9 dB	±0.008 dB
	Negative Vernier Accuracy	–0.9 dB	(3)_____		±0.008 dB

ManualsPlus.com

Table 3-2 Agilent E4401B Performance Verification Test Record

Agilent Technologies					
Model E4401B			**Report No. _____**		
Serial No. _____			**Date _____**		
Test Description		**Minimum**	**Results Measured**	**Maximum**	**Measurement Uncertainty**
	Power Sweep Accuracy		(4)_____	1.8 dB	±0.008 dB
43.	**Tracking Generator Level Flatness**	Note: Enter data in the appropriate section below depending upon the input impedance of the analyzer.			
	(Option 1DN or Option 1DQ only)				
	Positive Level Flatness, <1 MHz		(1)_____	2.0 dB	±0.73 dB
	Negative Level Flatness, <1 MHz	–2.0 dB	(2)_____		±0.73 dB
	Positive Level Flatness, 1 MHz to 10 MHz		(3)_____	2.0 dB	±0.190 dB
	Negative Level Flatness, 1 MHz to 10 MHz	–2.0 dB	(4)_____		±0.190 dB
	Positive Level Flatness, >10 MHz		(5)_____	1.5 dB	±0.190 dB
	Negative Level Flatness, >10 MHz	–1.5 dB	(6)_____		±0.190 dB
	75 Ω *(Option 1DQ)*				
	Positive Level Flatness, 1 MHz to 10 MHz		(3)_____	2.5 dB	±0.190 dB
	Negative Level Flatness, 1 MHz to 10 MHz	–2.5 dB	(4)_____		±0.190 dB
	Positive Level Flatness, >10 MHz		(5)_____	2.0 dB	±0.190 dB
	Negative Level Flatness, >10 MHz	–2.0 dB	(6)_____		±0.190 dB
45.	**Tracking Generator Harmonic Spurious Outputs** *(Option 1DN or Option 1DQ only)*				
	2nd Harmonic, <20 MHz		(1)_____	–20 dBc	±2.6 dB

ManualsPlus.com

Table 3-2 Agilent E4401B Performance Verification Test Record

Agilent Technologies					
Model E4401B			**Report No. _____**		
Serial No. _____			**Date _____**		
Test Description		**Minimum**	**Results Measured**	**Maximum**	**Measurement Uncertainty**
	2nd Harmonic, ≥20 MHz		(2)_____	–25 dBc	±2.6 dB
	3rd Harmonic, <20 MHz		(3)_____	–20 dBc	±2.6 dB
	3rd Harmonic, ≥20 MHz		(4)_____	–25 dBc	±2.6 dB
47.	**Tracking Generator Non-Harmonic Spurious Outputs** *(Option 1DN or Option 1DQ only)*				
	Highest Non-Harmonic Spurious Output Amplitude		(1)_____	–35 dBc	±2.65 dB
50.	**Gate Delay Accuracy and Gate Length Accuracy** *(Option 1D6 only)*				
	Minimum Gate Delay	499.9 ns	(1)_____	1.5001 µs	±549 ps
	Maximum Gate Delay	499.9 ns	(2)_____	1.5001 µs	±549 ps
	1 µs Gate Length	499.9 ns	(3)_____	1.5001 µs	±520 ps
	65 ms Gate Length	64.993 ms	(4)_____	65.007 ms	±647 ns
51.	**Gate Mode Additional Amplitude Error** *(Option 1D6 only)*				
	Amplitude Error	–0.2 dB	(1)_____	0.2 dB	±0.023 dB

ManualsPlus.com

Agilent E4402B Performance Verification Test Record

Tests for the Agilent E4402B only are included in this test record, therefore not all test numbers are included.

Table 3-3 Agilent E4402B Performance Verification Test Record

Agilent Technologies

Address: _____ Report No. _____

_____ Date _____

_____

Model E4402B

Serial No. _____ Ambient temperature _____° C

Options _____ Relative humidity_____%

Firmware Revision _____ Power mains line frequency _____ Hz (nominal)

Customer _____ Tested by _____

Test Equipment Used:

Description	Model No.	Trace No.	Cal Due Date
Synthesized Signal Generator	_____	_____	_____
Wide Offset Phase Noise Signal Generator	_____	_____	_____
Synthesized Sweeper	_____	_____	_____
Function Generator	_____	_____	_____
Power Meter, Dual-Channel	_____	_____	_____
RF Power Sensor #1	_____	_____	_____
RF Power Sensor #2	_____	_____	_____
Low-Power Power Sensor	_____	_____	_____
Digital Multimeter	_____	_____	_____
Universal Counter	_____	_____	_____
Frequency Standard	_____	_____	_____
Power Splitter	_____	_____	_____
50 Ω Termination	_____	_____	_____
1 dB Step Attenuator	_____	_____	_____

ManualsPlus.com

Table 3-3 Agilent E4402B Performance Verification Test Record

10 dB Step Attenuator	_____	_____	_____
Oscilloscope *(Option 1D6 only)*	_____	_____	_____
Microwave Spectrum Analyzer *(Option 1DN only)*	_____	_____	_____
Notes/comments:	_____		

Table 3-4 Agilent E4402B Performance Verification Test Record

Agilent Technologies

Model E4402B **Report No.** _____

Serial No. _____ **Date** _____

Test Description		Minimum	Results Measured	Maximum	Measurement Uncertainty
1.	**10 MHz Reference Output Accuracy** (*Non-Option 1D5 only*)				
	Settability	–5.0 Hz	(1)_____	5.0 Hz	±293.3 µHz
2.	**10 MHz High-Stability Frequency Reference Output Accuracy** (*Option 1D5 only*)				
	5 Minute Warm-Up Error	–0.1 ppm	(1)_____	0.1 ppm	±0.000072 ppm
	15 Minute Warm-Up Error	–0.01 ppm	(2)_____	0.01 ppm	±0.000070 ppm
3.	**Frequency Readout and Marker Frequency Count Accuracy**				
	Frequency Readout Accuracy				
	Center Freq Span				
	1500 MHz 20 MHz	1499.83 MHz	(1)_____	1500.17 MHz	±0 Hz
	1500 MHz 10 MHz	1499.91 MHz	(2)_____	1500.09 MHz	±0 Hz
	1500 MHz 1 MHz	1499.991 MHz	(3)_____	1500.009 MHz	±0 Hz
	Marker Count Accuracy				

ManualsPlus.com

Table 3-4 Agilent E4402B Performance Verification Test Record

Agilent Technologies					
Model E4402B			**Report No. _____**		
Serial No. _____			**Date _____**		
Test Description		**Minimum**	**Results Measured**	**Maximum**	**Measurement Uncertainty**
	Center Freq Span				
	1500 MHz 10 MHz	1499.999999 MHz	(4)_____	1500.000001 MHz	±0 Hz
	1500 MHz 1 MHz	1499.999999 MHz	(5)_____	1500.000001 MHz	±0 Hz
6.	**Frequency Span Accuracy**				
	Span Start Freq				
	3000 MHz 0 Hz	2370 MHz	(1)_____	2430 MHz	±6.12 MHz
	100 MHz 10 MHz	79 MHz	(2)_____	81 MHz	±204 kHz
	100 kHz 10 MHz	79 kHz	(3)_____	81 kHz	±204 Hz
	100 MHz 800 MHz	79 MHz	(4)_____	81 MHz	±204 kHz
	100 kHz 800 MHz	79 kHz	(5)_____	81 kHz	±204 Hz
	100 MHz 1400 MHz	79 MHz	(6)_____	81 MHz	±204 kHz
	100 kHz 1499 MHz	79 kHz	(7)_____	81 kHz	±204 Hz
7.	**Noise Sidebands**				
	Offset from 1 GHz signal				
	(Serial Prefix < US4510, SG4510 or MY4510)				
	10 kHz		(1)_____	–90 dBc/Hz	±2.44 dB
	20 kHz		(2)_____	–100 dBc/Hz	±2.44 dB
	30 kHz		(3)_____	–106 dBc/Hz	±2.44 dB
	(Serial Prefix ≥ US4510, SG4510 or MY4510, Option 1DR)				
	10 kHz		(1)_____	–98 dBc/Hz	±2.44 dB
	20 kHz		(2)_____	–104 dBc/Hz	±2.44 dB
	30 kHz		(3)_____	–110 dBc/Hz	±2.44 dB

ManualsPlus.com

Table 3-4 Agilent E4402B Performance Verification Test Record

Agilent Technologies					
Model E4402B			**Report No. _____**		
Serial No. _____			**Date _____**		
Test Description		**Minimum**	**Results Measured**	**Maximum**	**Measurement Uncertainty**
	(Serial Prefix ≥ US4510, SG4510 or MY4510, Non-Option 1DR)				
	10 kHz		(1)_____	–90 dBc/Hz	±2.44 dB
	20 kHz		(2)_____	–104 dBc/Hz	±2.44 dB
	30 kHz		(3)_____	–110 dBc/Hz	±2.44 dB
8.	**Noise Sidebands - Wide Offsets**	Note: Enter data in the appropriate section below depending upon whether or not Option 120 (ACPR Dynamic Range Extension) is installed.			
	Non-Option 120				
	Offset from 1 GHz signal				
	100 kHz		(1)_____	–118 dBc/Hz	±2.44 dB
	1 MHz		(2)_____	–125 dBc/Hz	±2.44 dB
	5 MHz		(3)_____	–127 dBc/Hz	±2.44 dB
	10 MHz		(4)_____	–131 dBc/Hz	±2.44 dB
	Option 120				
	Offset from 1 GHz signal				
	100 kHz		(1)_____	–118 dBc/Hz	±2.44 dB
	1 MHz		(2)_____	–133 dBc/Hz	±2.44 dB
	5 MHz		(3)_____	–135 dBc/Hz	±2.44 dB
	10 MHz		(4)_____	–137 dBc/Hz	±2.44 dB
9.	**System-Related Sidebands**				
	Offset from 500 MHz signal				
	30 kHz to 230 kHz		(1)_____	–65 dBc	±1.30 dB
	–30 kHz to –230 kHz		(2)_____	–65 dBc	±1.30 dB
10.	**Residual FM**				

ManualsPlus.com

Table 3-4 Agilent E4402B Performance Verification Test Record

Agilent Technologies					
Model E4402B			**Report No. _____**		
Serial No. _____			**Date _____**		
Test Description		**Minimum**	**Results Measured**	**Maximum**	**Measurement Uncertainty**
	1 kHz Res BW, (*Non-Option 1D5)*		(1)_____	150 Hz	±21 Hz
	1 kHz Res BW, (*Option 1D5)*		(1)_____	100 Hz	±21 Hz
	10 Hz Res BW (*Options 1DR and 1D5 only*)		(3)_____	2 Hz	±0.27 Hz
11.	**Sweep Time Accuracy**				
	Sweep Time				
	5 ms	–1.0%	(1)_____	1.0%	±0.16%
	20 ms	–1.0%	(2)_____	1.0%	±0.16%
	100 ms	–1.0%	(3)_____	1.0%	±0.16%
	1 s	–1.0%	(4)_____	1.0%	±0.16%
	10 s	–1.0%	(5)_____	1.0%	±0.16%
	1 ms (*Option AYX or B7D only)*	–1.0%	(6)_____	1.0%	±0.16%
	500 µs (*Option AYX or B7D only)*	–1.0%	(7)_____	1.0%	±0.16%
	100 µs (*Option AYX or B7D only)*	–1.0%	(8)_____	1.0%	±0.16%
12.	**Display Scale Fidelity**				
	Cumulative Log Fidelity, Res BW ≥1 kHz				
	dB from Ref Level				
	–4	–0.30 dB	(1)_____	0.30 dB	±0.082 dB
	–8	–0.30 dB	(2)_____	0.30 dB	±0.078 dB
	–12	–0.40 dB	(3)_____	0.40 dB	±0.075 dB
	–16	–0.40 dB	(4)_____	0.40 dB	±0.073 dB
	–20	–0.40 dB	(5)_____	0.40 dB	±0.078 dB

ManualsPlus.com

Table 3-4 Agilent E4402B Performance Verification Test Record

Agilent Technologies

Model E4402B **Report No.** _____

Serial No. _____ **Date** _____

Test Description		Minimum	Results Measured	Maximum	Measurement Uncertainty
	–24	–0.50 dB	(6)_____	0.50 dB	±0.074 dB
	–28	–0.50 dB	(7)_____	0.50 dB	±0.073 dB
	–32	–0.60 dB	(8)_____	0.60 dB	±0.077 dB
	–36	–0.60 dB	(9)_____	0.60 dB	±0.075 dB
	–40	–0.60 dB	(10)_____	0.60 dB	±0.081 dB
	–44	–0.70 dB	(11)_____	0.70 dB	±0.077 dB
	–48	–0.70 dB	(12)_____	0.70 dB	±0.076 dB
	–52	–0.70dB	(13)_____	0.70 dB	±0.080 dB
	–56	–0.70 dB	(14)_____	0.70 dB	±0.078 dB
	–60	–0.70 dB	(15)_____	0.70 dB	±0.084 dB
	–64	–0.80 dB	(16)_____	0.80 dB	±0.081 dB
	–68	–0.80 dB	(17)_____	0.80 dB	±0.080 dB
	–72	–0.80 dB	(18)_____	0.80 dB	±0.084 dB
	–76	–0.80 dB	(19)_____	0.80 dB	±0.083 dB
	–80	–0.80 dB	(20)_____	0.80 dB	±0.089 dB
	–84	–1.15 dB	(21)_____	1.15 dB	±0.086 dB
	Incremental Log Fidelity, Res BW ≥1 kHz				
	dB from Ref Level				
	–4	–0.4 dB	(22)_____	0.4 dB	±0.082 dB
	–8	–0.4 dB	(23)_____	0.4 dB	±0.078 dB
	–12	–0.4 dB	(24)_____	0.4 dB	±0.075 dB
	–16	–0.4 dB	(25)_____	0.4 dB	±0.073 dB
	–20	–0.4 dB	(26)_____	0.4 dB	±0.078 dB
	–24	–0.4 dB	(27)_____	0.4 dB	±0.074 dB
	–28	–0.4 dB	(28)_____	0.4 dB	±0.073 dB

ManualsPlus.com

Table 3-4 Agilent E4402B Performance Verification Test Record

Agilent Technologies

Model E4402B **Report No.** _____

Serial No. _____ **Date** _____

Test Description	Minimum	Results Measured	Maximum	Measurement Uncertainty
–32	–0.4 dB	(29)_____	0.4 dB	±0.077 dB
–36	–0.4 dB	(30)_____	0.4 dB	±0.075 dB
–40	–0.4 dB	(31)_____	0.4 dB	±0.081 dB
–44	–0.4 dB	(32)_____	0.4 dB	±0.077 dB
–48	–0.4 dB	(33)_____	0.4 dB	±0.076 dB
–52	–0.4 dB	(34)_____	0.4 dB	±0.080 dB
–56	–0.4 dB	(35)_____	0.4 dB	±0.078 dB
–60	–0.4 dB	(36)_____	0.4 dB	±0.084 dB
–64	–0.4 dB	(37)_____	0.4 dB	±0.081 dB
–68	–0.4 dB	(38)_____	0.4 dB	±0.080 dB
–72	–0.4 dB	(39)_____	0.4 dB	±0.084 dB
–76	–0.4 dB	(40)_____	0.4 dB	±0.083 dB
–80	–0.4 dB	(41)_____	0.4 dB	±0.089 dB
Cumulative Log Fidelity, Res BW ≤300 Hz *(Option 1DR only)*				
dB from Ref Level				
–4	–0.34 dB	(43)_____	0.34 dB	±0.082 dB
–8	–0.38 dB	(44)_____	0.38 dB	±0.078 dB
–12	–0.42 dB	(45)_____	0.42 dB	±0.075 dB
–16	–0.46 dB	(46)_____	0.46 dB	±0.073 dB
–20	–0.50 dB	(47)_____	0.50 dB	±0.078 dB
–24	–0.54 dB	(48)_____	0.54 dB	±0.074 dB
–28	–0.58 dB	(49)_____	0.58 dB	±0.073 dB
–32	–0.62 dB	(50)_____	0.62 dB	±0.077 dB
–36	–0.66 dB	(51)_____	0.66 dB	±0.075 dB

ManualsPlus.com

Table 3-4 Agilent E4402B Performance Verification Test Record

Agilent Technologies

Model E4402B **Report No.** _____

Serial No. _____ **Date** _____

Test Description		Minimum	Results Measured	Maximum	Measurement Uncertainty
	–40	–0.70 dB	(52)_____	0.70 dB	±0.081 dB
	–44	–0.74 dB	(53)_____	0.74 dB	±0.077 dB
	–48	–0.78 dB	(54)_____	0.78 dB	±0.076 dB
	–52	–0.82 dB	(55)_____	0.82 dB	±0.080 dB
	–56	–0.86 dB	(56)_____	0.86 dB	±0.078 dB
	–60	–0.90 dB	(57)_____	0.90 dB	±0.084 dB
	–64	–0.94 dB	(58)_____	0.94 dB	±0.081 dB
	–68	–0.98 dB	(59)_____	0.98 dB	±0.080 dB
	–72	–1.02 dB	(60)_____	1.02 dB	±0.084 dB
	–76	–1.06 dB	(61)_____	1.06 dB	±0.083 dB
	–80	–1.10 dB	(62)_____	1.10 dB	±0.089 dB
	–84	–1.14 dB	(63)_____	1.14 dB	±0.086 dB
	–88	–1.18 dB	(64)_____	1.18 dB	±0.085 dB
	–92	–1.22 dB	(65)_____	1.22 dB	±0.100 dB
	–96	–1.26 dB	(66)_____	1.26 dB	±0.099 dB
	–98	–1.28 dB	(67)_____	1.28 dB	±0.098 dB
	Incremental Log Fidelity, Res BW ≤300 Hz *(Option 1DR only)*				
	dB from Ref Level				
	–4	–0.4 dB	(68)_____	0.4 dB	±0.082 dB
	–8	–0.4 dB	(69)_____	0.4 dB	±0.078 dB
	–12	–0.4 dB	(70)_____	0.4 dB	±0.075 dB
	–16	–0.4 dB	(71)_____	0.4 dB	±0.073 dB
	–20	–0.4 dB	(72)_____	0.4 dB	±0.078 dB
	–24	–0.4 dB	(73)_____	0.4 dB	±0.074 dB

ManualsPlus.com

Table 3-4 Agilent E4402B Performance Verification Test Record

Agilent Technologies				
Model E4402B		**Report No.** _____		
Serial No. _____		**Date** _____		
Test Description	**Minimum**	**Results Measured**	**Maximum**	**Measurement Uncertainty**
–28	–0.4 dB	(74)_____	0.4 dB	±0.073 dB
–32	–0.4 dB	(75)_____	0.4 dB	±0.077 dB
–36	–0.4 dB	(76)_____	0.4 dB	±0.075 dB
–40	–0.4 dB	(77)_____	0.4 dB	±0.081 dB
–44	–0.4 dB	(78)_____	0.4 dB	±0.077 dB
–48	–0.4 dB	(79)_____	0.4 dB	±0.076 dB
–52	–0.4 dB	(80)_____	0.4 dB	±0.080 dB
–56	–0.4 dB	(81)_____	0.4 dB	±0.078 dB
–60	–0.4 dB	(82)_____	0.4 dB	±0.084 dB
–64	–0.4 dB	(83)_____	0.4 dB	±0.081 dB
–68	–0.4 dB	(84)_____	0.4 dB	±0.080 dB
–72	–0.4 dB	(85)_____	0.4 dB	±0.084 dB
–76	–0.4 dB	(86)_____	0.4 dB	±0.083 dB
–80	–0.4 dB	(87)_____	0.4 dB	±0.089 dB
Linear Fidelity, Res BW ≥1 kHz				
dB from Ref Level				
–4	–2.0%	(93)_____	2.0%	±0.064%
–8	–2.0%	(94)_____	2.0%	±0.064%
–12	–2.0%	(95)_____	2.0%	±0.064%
–16	–2.0%	(96)_____	2.0%	±0.064%
–20	–2.0%	(97)_____	2.0%	±0.063%
Linear Fidelity, Res BW ≤300 Hz *(Option 1DR only)*				
dB from Ref Level				
–4	–2.0%	(98)_____	2.0%	±0.064%

ManualsPlus.com

Table 3-4 Agilent E4402B Performance Verification Test Record

Agilent Technologies

Model E4402B **Report No.** _____

Serial No. _____ **Date** _____

Test Description		Minimum	Results Measured	Maximum	Measurement Uncertainty
	–8	–2.0%	(99)_____	2.0%	±0.064%
	–12	–2.0%	(100)_____	2.0%	±0.064%
	–16	–2.0%	(101)_____	2.0%	±0.064%
	–20	–2.0%	(102)_____	2.0%	±0.063%
	Zero Span, Res BW ≤300 Hz *(Option 1DR only)*				
	dB from Ref Level				
	–4	–0.36 dB	(103)_____	0.36 dB	±0.082 dB
	–8	–0.42 dB	(104)_____	0.42 dB	±0.078 dB
	–12	–0.48 dB	(105)_____	0.48 dB	±0.075 dB
	–16	–0.54 dB	(106)_____	0.54 dB	±0.073 dB
	–20	–0.60 dB	(107)_____	0.60 dB	±0.078 dB
	–24	–0.66 dB	(108)_____	0.66 dB	±0.074 dB
	–28	–0.72 dB	(109)_____	0.72 dB	±0.073 dB
	–32	–0.78 dB	(110)_____	0.78 dB	±0.077 dB
	–36	–0.84 dB	(111)_____	0.84 dB	±0.075 dB
	–40	–0.90 dB	(112)_____	0.90 dB	±0.081 dB
	–44	–0.96 dB	(113)_____	0.96 dB	±0.077 dB
	–48	–1.02 dB	(114)_____	1.02 dB	±0.076 dB
	–52	–1.08 dB	(115)_____	1.08 dB	±0.080 dB
	–56	–1.14 dB	(116)_____	1.14 dB	±0.078 dB
	–60	–1.20 dB	(117)_____	1.20 dB	±0.084 dB
	–64	–1.5 dB	(118)_____	1.5 dB	±0.081 dB
	–68	–1.5 dB	(119)_____	1.5 dB	±0.080 dB
	–70	–1.5 dB	(120)_____	1.5 dB	±0.084 dB

ManualsPlus.com

Table 3-4 Agilent E4402B Performance Verification Test Record

Agilent Technologies

Model E4402B **Report No.** _____

Serial No. _____ **Date** _____

Test Description		Minimum	Results Measured	Maximum	Measurement Uncertainty
13.	**Input Attenuation Switching Uncertainty**				
	Input Attenuation Setting				
	0 dB	–0.3 dB	(1)_____	0.3 dB	±0.101 dB
	5 dB	–0.3 dB	(2)_____	0.3 dB	±0.104 dB
	15 dB	–0.3 dB	(3)_____	0.3 dB	±0.102 dB
	20 dB	–0.3 dB	(4)_____	0.3 dB	±0.098 dB
	25 dB	–0.35 dB	(5)_____	0.35 dB	±0.098 dB
	30 dB	–0.40 dB	(6)_____	0.40 dB	±0.096 dB
	35 dB	–0.45 dB	(7)_____	0.45 dB	±0.099 dB
	40 dB	–0.50 dB	(8)_____	0.50 dB	±0.096 dB
	45 dB	–0.55 dB	(9)_____	0.55 dB	±0.099 dB
	50 dB	–0.60 dB	(10)_____	0.60 dB	±0.095 dB
	55 dB	–0.65 dB	(11)_____	0.65 dB	±0.099 dB
	60 dB	–0.70 dB	(12)_____	0.70 dB	±0.100 dB
	65 dB	–0.75 dB	(13)_____	0.75 dB	±0.111 dB
15.	**Reference Level Accuracy**				
	Log, Res BW ≥1 kHz				
	Reference Level				
	–10 dBm	–0.3 dB	(1)_____	0.3 dB	±0.091 dB
	0 dBm	–0.3 dB	(2)_____	0.3 dB	±0.100 dB
	–30 dBm	–0.3 dB	(3)_____	0.3 dB	±0.092 dB
	–40 dBm	–0.3 dB	(4)_____	0.3 dB	±0.094 dB
	–50 dBm	–0.5 dB	(5)_____	0.5 dB	±0.095 dB
	–60 dBm	–0.5 dB	(6)_____	0.5 dB	±0.097 dB

ManualsPlus.com

Table 3-4 Agilent E4402B Performance Verification Test Record

Agilent Technologies

Model E4402B **Report No.** _____

Serial No. _____ **Date** _____

Test Description	Minimum	Results Measured	Maximum	Measurement Uncertainty
–70 dBm	–0.5 dB	(7)_____	0.5 dB	±0.099 dB
–80 dBm	–0.7 dB	(8)_____	0.7 dB	±0.101 dB
Linear, Res BW ≥1 kHz				
Reference Level				
–10 dBm	–0.3 dB	(9)_____	0.3 dB	±0.091 dB
0 dBm	–0.3 dB	(10)_____	0.3 dB	±0.100 dB
–30 dBm	–0.3 dB	(11)_____	0.3 dB	±0.092 dB
–40 dBm	–0.3 dB	(12)_____	0.3 dB	±0.094 dB
–50 dBm	–0.5 dB	(13)_____	0.5 dB	±0.095 dB
–60 dBm	–0.5 dB	(14)_____	0.5 dB	±0.097 dB
–70 dBm	–0.5 dB	(15)_____	0.5 dB	±0.099 dB
–80 dBm	–0.7 dB	(16)_____	0.7 dB	±0.101 dB
Log, Res BW ≤300 Hz *(Option 1DR only)*				
Reference Level				
–10 dBm	–0.3 dB	(17)_____	0.3 dB	±0.091 dB
0 dBm	–0.3 dB	(18)_____	0.3 dB	±0.100 dB
–30 dBm	–0.3 dB	(19)_____	0.3 dB	±0.092 dB
–40 dBm	–0.3 dB	(20)_____	0.3 dB	±0.094 dB
–50 dBm	–0.5 dB	(21)_____	0.5 dB	±0.095 dB
–60 dBm	–0.5 dB	(22)_____	0.5 dB	±0.097 dB
–70 dBm	–0.5 dB	(23)_____	0.5 dB	±0.099 dB
–80 dBm	–0.7 dB	(24)_____	0.7 dB	±0.101 dB
Linear, Res BW ≤300 Hz *(Option 1DR only)*				
Reference Level				

ManualsPlus.com

Table 3-4 Agilent E4402B Performance Verification Test Record

Agilent Technologies

Model E4402B **Report No.** _____

Serial No. _____ **Date** _____

Test Description		Minimum	Results Measured	Maximum	Measurement Uncertainty
	–10 dBm	–0.3 dB	(25)_____	0.3 dB	±0.091 dB
	0 dBm	–0.3 dB	(26)_____	0.3 dB	±0.100 dB
	–30 dBm	–0.3 dB	(27)_____	0.3 dB	±0.092 dB
	–40 dBm	–0.3 dB	(28)_____	0.3 dB	±0.094 dB
	–50 dBm	–0.5 dB	(29)_____	0.5 dB	±0.095 dB
	–60 dBm	–0.5 dB	(30)_____	0.5 dB	±0.097 dB
	–70 dBm	–0.5 dB	(31)_____	0.5 dB	±0.099 dB
	–80 dBm	–0.7 dB	(32)_____	0.7 dB	±0.101 dB
16.	**Resolution Bandwidth Switching Uncertainty**				
	Resolution Bandwidth				
	3 kHz	–0.3 dB	(1)_____	0.3 dB	±0.048 dB
	9 kHz	–0.3 dB	(2)_____	0.3 dB	±0.048 dB
	10 kHz	–0.3 dB	(3)_____	0.3 dB	±0.048 dB
	30 kHz	–0.3 dB	(4)_____	0.3 dB	±0.048 dB
	100 kHz	–0.3 dB	(5)_____	0.3 dB	±0.048 dB
	120 kHz	–0.3 dB	(6)_____	0.3 dB	±0.048 dB
	300 kHz	–0.3 dB	(7)_____	0.3 dB	±0.048 dB
	1 MHz	–0.3 dB	(8)_____	0.3 dB	±0.048 dB
	3 MHz	–0.3 dB	(9)_____	0.3 dB	±0.048 dB
	5 MHz	–0.6 dB	(10)_____	0.6 dB	±0.076 dB
	300 Hz *(Option 1DR only)*	–0.3 dB	(11)_____	0.3 dB	±0.048 dB
	200 Hz *(Option 1DR only)*	–0.3 dB	(12)_____	0.3 dB	±0.048 dB
	100 Hz *(Option 1DR only)*	–0.3 dB	(13)_____	0.3 dB	±0.048 dB
	30 Hz *(Option 1DR only)*	–0.3 dB	(14)_____	0.3 dB	±0.048 dB
	10 Hz *(Option 1DR only)*	–0.3 dB	(15)_____	0.3 dB	±0.048 dB

ManualsPlus.com

Table 3-4 Agilent E4402B Performance Verification Test Record

Agilent Technologies

Model E4402B **Report No.** _____

Serial No. _____ **Date** _____

	Test Description	Minimum	Results Measured	Maximum	Measurement Uncertainty
	3 Hz *(Option 1DR and 1D5 only)* Firmware Revision A.08.00 or later	–0.3 dB	(16)_____	0.3 dB	±0.048 dB
	1Hz *(Option 1DR and 1D5 only)* Firmware Revision A.08.00 or later	–0.3 dB	(17)_____	0.3 dB	±0.048 dB
18.	**Absolute Amplitude Accuracy (Reference Settings)**				
	Log, Preamp Off	–0.34 dB	(1)_____	0.34 dB	±0.09 dB
	Lin, Preamp Off	–0.34 dB	(2)_____	0.34 dB	±0.09 dB
	Log, Preamp On *(Option 1DS only)*	–0.37 dB	(3)_____	0.37 dB	±0.09 dB
	Lin, Preamp On *(Option 1DS only)*	–0.37 dB	(4)_____	0.37 dB	±0.09 dB
20.	**Overall Absolute Amplitude Accuracy**				
	0 dBm Reference Level				
	0 dBm input	–0.54 dB	(1)_____	0.54 dB	±0.234 dB
	–10 dBm input	–0.54 dB	(2)_____	0.54 dB	±0.115 dB
	–20 dBm input	–0.54 dB	(3)_____	0.54 dB	±0.110 dB
	–30 dBm input	–0.54 dB	(4)_____	0.54 dB	±0.109 dB
	–40 dBm input	–0.54 dB	(5)_____	0.54 dB	±0.109 dB
	–50 dBm input	–0.54 dB	(6)_____	0.54 dB	±0.109 dB
	–20 dBm Reference Level				
	–20 dBm input	–0.54 dB	(7)_____	0.54 dB	±0.109 dB
	–30 dBm input	–0.54 dB	(8)_____	0.54 dB	±0.109 dB
	–40 dBm input	–0.54 dB	(9)_____	0.54 dB	±0.109 dB
	–50 dBm input	–0.54 dB	(10)_____	0.54 dB	±0.109 dB

ManualsPlus.com

Table 3-4 Agilent E4402B Performance Verification Test Record

Agilent Technologies					
Model E4402B			**Report No. _____**		
Serial No. _____			**Date _____**		
Test Description		**Minimum**	**Results Measured**	**Maximum**	**Measurement Uncertainty**
	–40 dBm Reference Level				
	–40 dBm input	–0.54 dB	(11)_____	0.54 dB	±0.087 dB
	–50 dBm input	–0.54 dB	(12)_____	0.54 dB	±0.087 dB
	–50 dBm Reference Level				
	–50 dBm input	–0.54 dB	(13)_____	0.54 dB	±0.087 dB
21.	**Resolution Bandwidth Accuracy**				
	Resolution Bandwidth				
	5 MHz	3.5 MHz	(1)_____	6.5 MHz	±110 kHz
	3 MHz	2.55 MHz	(2)_____	3.45 MHz	±66 kHz
	1 MHz	0.85 MHz	(3)_____	1.15 MHz	±22 kHz
	300 kHz	255 kHz	(4)_____	345 kHz	±6.6 kHz
	100 kHz	85 kHz	(5)_____	115 kHz	±2.2 kHz
	30 kHz	25.5 kHz	(6)_____	34.5 kHz	±660 Hz
	10 kHz	8.5 kHz	(7)_____	11.5 kHz	±220 Hz
	3 kHz	2.55 kHz	(8)_____	3.45 kHz	±66 Hz
	1 kHz	850 Hz	(9)_____	1.15 kHz	±22 Hz
	120 kHz	96 kHz	(10)_____	144 kHz	±2.17 kHz
	9 kHz	7.2 kHz	(11)_____	10.8 kHz	±163 Hz
23.	**Frequency Response**	Note: Enter data in the appropriate section below depending upon the ambient temperature at which the test was performed and installed options.			
	20 to 30° C Non-Option UKB Band 0 (9 kHz to 3.0 GHz)				
	Maximum Response		(1)_____	0.46 dB	±0.19 dB

ManualsPlus.com

Table 3-4 Agilent E4402B Performance Verification Test Record

Agilent Technologies

Model E4402B **Report No.** _____

Serial No. _____ **Date** _____

Test Description	Minimum	Results Measured	Maximum	Measurement Uncertainty
Minimum Response	–0.46 dB	(2)_____		±0.19 dB
Peak-to-Peak Response		(3)_____	0.92 dB	±0.19 dB
Option UKB dc Coupled Band 0 (100 Hz to 3.0 GHz)				
Maximum Response		(1)_____	0.50 dB	±0.19 dB
Minimum Response	–0.50 dB	(2)_____		±0.19 dB
Peak-to-Peak Response		(3)_____	1.0 dB	±0.19 dB
Non-Option UKB Band 0A (800 MHz to 1.0 GHz) (serial number US39441006 or greater)				
Maximum Response		(4)_____	0.46 dB	±0.11 dB
Minimum Response	–0.46 dB	(5)_____		±0.11 dB
Peak-to-Peak Response		(6)_____	0.92 dB	±0.11 dB
Non-Option UKB Band 0B (1.7 GHz to 2.0 GHz) (serial number US39441006 or greater)				
Maximum Response		(7)_____	0.46 dB	±0.11 dB
Minimum Response	–0.46 dB	(8)_____		±0.11 dB
Peak-to-Peak Response		(9)_____	0.92 dB	±0.11 dB

ManualsPlus.com

Table 3-4 Agilent E4402B Performance Verification Test Record

Agilent Technologies

Model E4402B **Report No.** _____

Serial No. _____ **Date** _____

Test Description	Minimum	Results Measured	Maximum	Measurement Uncertainty
Option UKB ac Coupled Band 0 (100 kHz to 3.0 GHz)				
Maximum Response		(10)_____	0.50 dB	±0.11 dB
Minimum Response	–0.50 dB	(11)_____		±0.11 dB
Peak-to-Peak Response		(12)_____	1.0 dB	±0.11 dB
Option UKB ac Coupled Band 0A (800 MHz to 1.0 GHz)				
Maximum Response		(13)_____	0.50 dB	±0.11 dB
Minimum Response	–0.50 dB	(14)_____		±0.11 dB
Peak-to-Peak Response		(15)_____	1.0 dB	±0.11 dB
Option UKB ac Coupled Band 0B (1.7 GHz to 2.0 GHz)				
Maximum Response		(16)_____	0.50 dB	±0.11 dB
Minimum Response	–0.50 dB	(17)_____		±0.11 dB
Peak-to-Peak Response		(18)_____	1.0 dB	±0.11 dB
0 to 55° C				
Non-Option UKB Band 0 (9 kHz to 3.0 GHz)				
Maximum Response		(1)_____	0.76 dB	±0.19 dB
Minimum Response	–0.76 dB	(2)_____		±0.19 dB

ManualsPlus.com

Table 3-4 Agilent E4402B Performance Verification Test Record

Agilent Technologies					
Model E4402B			**Report No. _____**		
Serial No. _____			**Date _____**		
Test Description		**Minimum**	**Results Measured**	**Maximum**	**Measurement Uncertainty**
	Peak-to-Peak Response		(3)_____	1.52 dB	±0.19 dB
	Option UKB dc coupled Band 0 (100 Hz to 3.0 GHz)				
	Maximum Response		(1)_____	1.0 dB	±0.19 dB
	Minimum Response	–1.0 dB	(2)_____		±0.19 dB
	Peak-to-Peak Response		(3)_____	2.0 dB	±0.19 dB
	Non-Option UKB Band 0A (800 MHz to 1.0 GHz) (serial number US39441006 or greater)				
	Maximum Response		(4)_____	0.76 dB	±0.11 dB
	Minimum Response	–0.76 dB	(5)_____		±0.11 dB
	Peak-to-Peak Response		(6)_____	1.52 dB	±0.11 dB
	Non-Option UKB Band 0B (1.7 GHz to 2.0 GHz) (serial number US39441006 or greater)				
	Maximum Response		(7)_____	0.76 dB	±0.11 dB
	Minimum Response	–0.76 dB	(8)_____		±0.11 dB
	Peak-to-Peak Response		(9)_____	1.52 dB	±0.11 dB

ManualsPlus.com

Table 3-4 Agilent E4402B Performance Verification Test Record

Agilent Technologies					
Model E4402B			**Report No. _____**		
Serial No. _____			**Date _____**		
Test Description		**Minimum**	**Results Measured**	**Maximum**	**Measurement Uncertainty**
	Option UKB ac Coupled Band 0 (100 kHz to 3.0 GHz)				
	Maximum Response		(10)_____	1.0 dB	±0.11 dB
	Minimum Response	–1.0 dB	(11)_____		±0.11 dB
	Peak-to-Peak Response		(12)_____	2.0 dB	±0.11 dB
	Option UKB ac Coupled Band 0A (800 MHz to 1.0 GHz)				
	Maximum Response		(13)_____	1.0 dB	±0.11 dB
	Minimum Response	–1.0 dB	(14)_____		±0.11 dB
	Peak-to-Peak Response		(15)_____	2.0 dB	±0.11 dB
	Option UKB ac Coupled Band 0B (1.7 GHz to 2.0 GHz)				
	Maximum Response		(16)_____	1.0 dB	±0.11 dB
	Minimum Response	–1.0 dB	(17)_____		±0.11 dB
	Peak-to-Peak Response		(18)_____	2.0 dB	±0.11 dB
26.	**Frequency Response (Preamp On)** *(Option 1DS Only)*	Note: Enter data in the appropriate section below depending upon the ambient temperature at which the test was performed and installed options.			
	20 to 30° C Band 0 (1 MHz to 3.0 GHz)				
	Maximum Response		(1)_____	1.5 dB	±0.28 dB

ManualsPlus.com

Table 3-4 Agilent E4402B Performance Verification Test Record

Agilent Technologies					
Model E4402B			**Report No. _____**		
Serial No. _____			**Date _____**		
Test Description		**Minimum**	**Results Measured**	**Maximum**	**Measurement Uncertainty**
	Minimum Response	–1.5 dB	(2)_____		±0.28 dB
	Peak-to-Peak Response		(3)_____	3.0 dB	±0.28 dB
	Band 0A (800 MHz to 1.0 GHz) (serial number US39441006 or greater)				
	Maximum Response		(4)_____	1.5 dB	±0.28 dB
	Minimum Response	–1.5 dB	(5)_____		±0.28 dB
	Peak-to-Peak Response		(6)_____	3.0 dB	±0.28 dB
	Band 0B (1.7 GHz to 2.0 GHz) (serial number US39441006 or greater)				
	Maximum Response		(7)_____	1.5 dB	±0.28 dB
	Minimum Response	–1.5 dB	(8)_____		±0.28 dB
	Peak-to-Peak Response		(9)_____	3.0 dB	±0.28 dB
	0 to 55° C				
	Band 0 (1 MHz to 3.0 GHz)				
	Maximum Response		(1)_____	2.0 dB	±0.28 dB
	Minimum Response	–2.0 dB	(2)_____		±0.28 dB
	Peak-to-Peak Response		(3)_____	4.0 dB	±0.28 dB

ManualsPlus.com

Table 3-4 Agilent E4402B Performance Verification Test Record

Agilent Technologies

Model E4402B **Report No.** _____

Serial No. _____ **Date** _____

	Test Description	Minimum	Results Measured	Maximum	Measurement Uncertainty
	Band 0A (800 MHz to 1.0 GHz) (serial number US39441006 or greater)				
	Maximum Response		(4)_____	2.0 dB	±0.28 dB
	Minimum Response	–2.0 dB	(5)_____		±0.28 dB
	Peak-to-Peak Response		(6)_____	4.0 dB	±0.28 dB
	Band 0B (1.7 GHz to 2.0 GHz) (serial number US39441006 or greater)				
	Maximum Response		(7)_____	2.0 dB	±0.28 dB
	Minimum Response	–2.0	(8)_____		±0.28 dB
	Peak-to-Peak Response		(9)_____	4.0 dB	±0.28 dB
29.	**Other Input-Related Spurious Responses**				
	Input Frequency				
	2042.8 MHz		(1)_____	–65 dBc	±.891 dB
	2642.8 MHz		(2)_____	–65 dBc	±.891 dB
	1820.8 MHz		(3)_____	–65 dBc	±.891 dB
	278.5 MHz		(4)_____	–65 dBc	±.891 dB
31.	**Spurious Responses**				
	300 MHz TOI, 1 kHz RBW	11 dBm	(1)_____		±0.93 dB
	300 MHz TOI, 30 Hz RBW (*Option 1DR only)*	11 dBm	(2)_____		±0.93 dB
	300 MHz SHI	35 dBm	(3)_____		±0.41 dB
	900 MHz SHI	45 dBm	(4)_____		±0.41 dB

ManualsPlus.com

Table 3-4 Agilent E4402B Performance Verification Test Record

Agilent Technologies

Model E4402B **Report No.** _____

Serial No. _____ **Date** _____

Test Description		Minimum	Results Measured	Maximum	Measurement Uncertainty
33.	**Gain Compression**				
	Test Frequency				
	53 MHz		(1)_____	1.0 dB	±0.123 dB
	50.004 MHz (*Option 1DR only*)		(2)_____	1.0 dB	±0.123 dB
	1403 MHz		(3)_____	1.0 dB	±0.123 dB
	2503 MHz		(4)_____	1.0 dB	±0.123 dB
36.	**Displayed Average Noise Level**	Note: Enter results with preamp on in the appropriate section based upon the ambient temperature when the test was performed.			
	1 kHz RBW, Preamp Off				
	10 MHz to 1 GHz		(1)_____	–117 dBm	±1.23 dB
	1 GHz to 2 GHz		(2)_____	–116 dBm	±1.23 dB
	2 GHz to 3 GHz		(3)_____	–114 dBm	±1.23 dB
	1kHz RBW, Preamp On, 0 to 55° C				
	10 MHz to 1 GHz		(4)_____	–132 dBm	±1.23 dB
	1 GHz to 2 GHz		(5)_____	–132 dBm	±1.23 dB
	2 GHz to 3 GHz		(6)_____	–129 dBm	±1.23 dB
	10 Hz RBW, Preamp Off				
	10 MHz to 1 GHz		(7)_____	–136 dBm	±1.23 dB
	1 GHz to 2 GHz		(8)_____	–135 dBm	±1.23 dB
	2 GHz to 3 GHz		(9)_____	–133 dBm	±1.23 dB
	10 Hz RBW, Preamp On, 0 to 55° C				
	10 MHz to 1 GHz		(10)_____	–151 dBm	±1.23 dB
	1 GHz to 2 GHz		(11)_____	–151 dBm	±1.23 dB
	2 GHz to 3 GHz		(12)_____	–148 dBm	±1.23 dB

ManualsPlus.com

Table 3-4 Agilent E4402B Performance Verification Test Record

Agilent Technologies

Model E4402B **Report No.** _____

Serial No. _____ **Date** _____

	Test Description	Minimum	Results Measured	Maximum	Measurement Uncertainty
	1kHz RBW, Preamp On, 20 to 30° C				
	10 MHz to 1 GHz		(13)_____	–133 dBm	±1.23 dB
	1 GHz to 2 GHz		(14)_____	–134 dBm	±1.23 dB
	2 GHz to 3 GHz		(15)_____	–132 dBm	±1.23 dB
	10 Hz RBW, Preamp On, 20 to 30° C				
	10 MHz to 1 GHz		(16)_____	–152 dBm	±1.23 dB
	1 GHz to 2 GHz		(17)_____	–152 dBm	±1.23 dB
	2 GHz to 3 GHz		(18)_____	–151 dBm	±1.23 dB
39.	**Residual Responses**				
	150 kHz to 3.0 GHz		(1)_____	–90 dBm	±0.87 dB
40.	**Fast Time Domain Amplitude Accuracy** *(Option AYX only)*				
	Amplitude Error	–0.3%	(1)_____	0.3%	±0.029%
42.	**Tracking Generator Absolute Amplitude and Vernier Accuracy** *(Option 1DN only)*				
	Absolute Amplitude Accuracy	–0.75 dB	(1)_____	0.75 dB	±0.096 dB
	Absolute Vernier Accuracy				
	–2 dB	–0.5 dB	(2)_____	0.5 dB	±0.008 dB
	–3 dB	–0.5 dB	(3)_____	0.5 dB	±0.008 dB
	–5 dB	–0.5 dB	(4)_____	0.5 dB	±0.008 dB
	–6 dB	–0.5 dB	(5)_____	0.5 dB	±0.008 dB
	–7 dB	–0.5 dB	(6)_____	0.5 dB	±0.008 dB

ManualsPlus.com

Table 3-4 Agilent E4402B Performance Verification Test Record

Agilent Technologies

Model E4402B **Report No.** _____

Serial No. _____ **Date** _____

Test Description		Minimum	Results Measured	Maximum	Measurement Uncertainty
	–8 dB	–0.5 dB	(7)_____	0.5 dB	±0.008 dB
	–9 dB	–0.5 dB	(8)_____	0.5 dB	±0.008 dB
	–10 dB	–0.5 dB	(9)_____	0.5 dB	±0.008 dB
	Incremental Vernier Accuracy				
	–2 dB	–0.2 dB	(10)_____	0.2 dB	±0.008 dB
	–3 dB	–0.2 dB	(11)_____	0.2 dB	±0.008 dB
	–5 dB	–0.2 dB	(12)_____	0.2 dB	±0.008 dB
	–6 dB	–0.2 dB	(13)_____	0.2 dB	±0.008 dB
	–7 dB	–0.2 dB	(14)_____	0.2 dB	±0.008 dB
	–8 dB	–0.2 dB	(15)_____	0.2 dB	±0.008 dB
	–9 dB	–0.2 dB	(16)_____	0.2 dB	±0.008 dB
	–10 dB	–0.2 dB	(17)_____	0.2 dB	±0.008 dB
44.	**Tracking Generator Level Flatness** *(Option 1DN only)*				
	Positive Level Flatness, <1 MHz		(1)_____	3.0 dB	±0.284 dB
	Negative Level Flatness, <1 MHz	–3.0 dB	(2)_____		±0.284 dB
	Positive Level Flatness, 1 MHz to 10 MHz		(3)_____	3.0 dB	±0.142 dB
	Negative Level Flatness, 1 MHz to 10 MHz	–3.0 dB	(4)_____		±0.142 dB
	Positive Level Flatness, >10 MHz to 1.5 GHz		(5)_____	2.0 dB	±0.142 dB
	Negative Level Flatness, >10 MHz to 1.5 GHz	–2.0 dB	(6)_____		±0.142 dB

ManualsPlus.com

Table 3-4 Agilent E4402B Performance Verification Test Record

Agilent Technologies					
Model E4402B			**Report No. _____**		
Serial No. _____			**Date _____**		
Test Description		**Minimum**	**Results Measured**	**Maximum**	**Measurement Uncertainty**
	Positive Level Flatness, >1.5 GHz		(7)_____	2.0 dB	±0.142 dB
	Negative Level Flatness, >1.5 GHz	–2.0 dB	(8)_____		±0.142 dB
46.	**Tracking Generator Harmonic Spurious Outputs** *(Option 1DN only)*				
	2nd Harmonic, <20 kHz		(1)_____	–15 dBc	±2.6 dB
	2nd Harmonic, ≥20 kHz		(2)_____	–25 dBc	±2.6 dB
	3rd Harmonic, <20 kHz		(3)_____	–15 dBc	±2.6 dB
	3rd Harmonic, ≥20 kHz		(4)_____	–25 dBc	±2.6 dB
48.	**Tracking Generator Non-Harmonic Spurious Outputs** *(Option 1DN only)*				
	Highest Non-Harmonic Spurious Output Amplitude, 9 kHz to 2 GHz		(1)_____	–27 dBc	±2.63 dB
	Highest Non-Harmonic Spurious Output Amplitude, 2 GHz to 3 GHz		(2)_____	–23 dBc	±3.14 dB
49.	**Tracking Generator L.O. Feedthrough** *(Option 1DN only)*				
	9 kHz to 2.9 GHz		(1)_____	–16 dBm	±2.58 dB
	2.9 GHz to 3.0 GHz		(2)_____	–16 dBm	±3.03 dB

ManualsPlus.com

Table 3-4 Agilent E4402B Performance Verification Test Record

Agilent Technologies

Model E4402B **Report No.** _____

Serial No. _____ **Date** _____

Test Description		Minimum	Results Measured	Maximum	Measurement Uncertainty
50.	**Gate Delay Accuracy and Gate Length Accuracy** *(Option 1D6 only)*				
	Minimum Gate Delay	499.9 ns	(1)_____	1.5001 µs	±549 ps
	Maximum Gate Delay	499.9 ns	(2)_____	1.5001 µs	±549 ps
	1 µs Gate Length	499.9 ns	(3)_____	1.5001 µs	±520 ps
	65 ms Gate Length	64.993 ms	(4)_____	65.007 ms	±647 ns
51.	**Gate Mode Additional Amplitude Error** *(Option 1D6 only)*				
	Amplitude Error	–0.2 dB	(1)_____	0.2 dB	±0.023 dB
58.	**GSM Phase and Frequency Error** *(Option BAH and B7E)*				
	Peak Phase Error	–2.1 Deg	(1)_____	2.1 Deg	±0.52 Deg
	RMS Phase Error	–1.1 Deg	(2)_____	1.1 Deg	±0.000063 Deg
	Frequency Error	–10 Hz	(3)_____	10 Hz	±0.006 Hz
59.	**Comms Absolute Power Accuracy** *(Options BAC or BAH)*				
	20 to 30° C				
	cdmaOne Channel Power Accuracy *(Option BAC only)*				
	Cellular Band Input Amplitude				
	15 dBm	–0.90 dB	(1)_____	0.90 dB	±0.173 dB
	–5 dBm	–0.90 dB	(2)_____	0.90 dB	±0.161 dB
	–25 dBm	–0.86 dB	(3)_____	0.86 dB	±0.161 dB

ManualsPlus.com

Table 3-4 Agilent E4402B Performance Verification Test Record

Agilent Technologies

Model E4402B **Report No.** _____

Serial No. _____ **Date** _____

Test Description	Minimum	Results Measured	Maximum	Measurement Uncertainty
–45 dBm	–0.70 dB	(4)_____	0.70 dB	±0.152 dB
–55 dBm	–0.78 dB	(5)_____	0.78 dB	±0.152 dB
–70 dBm	–0.90 dB	(6)_____	0.90 dB	±0.161 dB
PCS Band Input Amplitude				
15 dBm	–0.74 dB[a]	(7)_____	0.74 dB[b]	±0.173 dB
–5 dBm	–0.74 dB[a]	(8)_____	0.74 dB[b]	±0.161 dB
–25 dBm	–0.69 dB[a]	(9)_____	0.69 dB[b]	±0.161 dB
–45 dBm	–0.70 dB[a]	(10)_____	0.70 dB[b]	±0.152 dB
–55 dBm	–0.78 dB[a]	(11)_____	0.78 dB[b]	±0.152 dB
–70 dBm	–0.90 dB[a]	(12)_____	0.90 dB[b]	±0.161 dB
GSM Transmit Power Accuracy *(Option BAH only)*				
GSM Band Input Amplitude				
15 dBm	–0.99 dB	(13)_____	0.99 dB	±0.173 dB
–20 dBm	–0.99 dB	(14)_____	0.99 dB	±0.161 dB
–30 dBm	–0.92 dB	(15)_____	0.92 dB	±0.156 dB
–40 dBm	–0.97 dB	(16)_____	0.97 dB	±0.161 dB
–50 dBm	–1.16 dB	(17)_____	1.16 dB	±0.152 dB
–60 dBm	–1.29 dB	(18)_____	1.29 dB	±0.161 dB
DCS and PCS Bands Input Amplitude				
15 dBm	–0.83 dB[a]	(19)_____	0.83 dB[b]	±0.173 dB
–20 dBm	–0.83 dB[a]	(20)_____	0.83 dB[b]	±0.161 dB

ManualsPlus.com

Table 3-4 Agilent E4402B Performance Verification Test Record

Agilent Technologies

Model E4402B **Report No.** _____

Serial No. _____ **Date** _____

Test Description	Minimum	Results Measured	Maximum	Measurement Uncertainty
–30 dBm	–0.75 dB[a]	(21)_____	0.75 dB[b]	±0.156 dB
–40 dBm	–0.80 dB[a]	(22)_____	0.80 dB[b]	±0.161 dB
–50 dBm	–0.99 dB[a]	(23)_____	0.99 dB[b]	±0.152 dB
–60 dBm	–1.12 dB[a]	(24)_____	1.12 dB[b]	±0.161 dB
cdmaOne Receive Channel Power, Preamp Off *(Option BAC only)*				
Cellular Band Input Amplitude				
–40 dBm	–1.58 dB	(25)_____	1.58 dB	±0.161 dB
–60 dBm	–1.58 dB	(26)_____	1.58 dB	±0.161 dB
–70 dBm	–1.58 dB	(27)_____	1.58 dB	±0.161 dB
–80 dBm	–1.58 dB	(28)_____	1.58 dB	±0.161 dB
–85 dBm	–1.58 dB	(29)_____	1.58 dB	±0.152 dB
PCS Band Input Amplitude				
–40 dBm	–1.52 dB[a]	(30)_____	1.52 dB[b]	±0.161 dB
–60 dBm	–1.52 dB[a]	(31)_____	1.52 dB[b]	±0.161 dB
–70 dBm	–1.52 dB[a]	(32)_____	1.52 dB[b]	±0.161 dB
–80 dBm	–1.52 dB[a]	(33)_____	1.52 dB[b]	±0.161 dB
–85 dBm	–1.52 dB[a]	(34)_____	1.52 dB[b]	±0.152 dB
cdmaOne Receive Channel Power, Preamp On *(Option BAC only)*				
Cellular Band Input Amplitude				

ManualsPlus.com

Table 3-4 Agilent E4402B Performance Verification Test Record

Agilent Technologies					
Model E4402B			**Report No. _____**		
Serial No. _____			**Date _____**		
Test Description		**Minimum**	**Results Measured**	**Maximum**	**Measurement Uncertainty**
	–40 dBm	–1.77 dB	(35)_____	1.77 dB	±0.161 dB
	–60 dBm	–1.77 dB	(36)_____	1.77 dB	±0.161 dB
	–70 dBm	–1.77 dB	(37)_____	1.77 dB	±0.161 dB
	–80 dBm	–1.77 dB	(38)_____	1.77 dB	±0.161 dB
	–90 dBm	–3.00 dB	(39)_____	3.00 dB	±0.161 dB
	–100 dBm	–3.00 dB	(40)_____	3.00 dB	±0.161 dB
	PCS Band Input Amplitude				
	–40 dBm	–1.86 dB	(41)_____	1.86 dB[b]	±0.161 dB
	–60 dBm	–1.86 dB	(42)_____	1.86 dB[b]	±0.161 dB
	–70 dBm	–1.86 dB	(43)_____	1.86 dB[b]	±0.161 dB
	–80 dBm	–1.86 dB	(44)_____	1.86 dB[b]	±0.161 dB
	–90 dBm	–3.09 dB	(45)_____	3.09 dB[b]	±0.161 dB
	–100 dBm	–3.09 dB	(46)_____	3.09 dB[b]	±0.161 dB

a. Subtract 0.10 dB if the analyzer has Option UKB installed.
b. Add 0.10 dB if the analyzer has Option UKB installed.

ManualsPlus.com

Agilent E4403B Performance Verification Test Record

Tests for the Agilent E4403B only are included in this test record, therefore not all test numbers are included.

Table 3-5 Agilent E4403B Performance Verification Test Record

Agilent Technologies

Address: _____ Report No. _____

_____ Date _____

_____

Model E4403B

Serial No. _____ Ambient temperature _____° C

Options _____ Relative humidity _____%

Firmware Revision _____ Power mains line frequency _____ Hz (nominal)

Customer _____ Tested by _____

Test Equipment Used:

Description	Model No.	Trace No.	Cal Due Date
Synthesized Signal Generator	_____	_____	_____
Synthesized Sweeper	_____	_____	_____
Function Generator	_____	_____	_____
Power Meter, Dual-Channel	_____	_____	_____
RF Power Sensor #1	_____	_____	_____
RF Power Sensor #2	_____	_____	_____
Low-Power Power Sensor	_____	_____	_____
Digital Multimeter	_____	_____	_____
Universal Counter	_____	_____	_____
Frequency Standard	_____	_____	_____
Power Splitter	_____	_____	_____
50 Ω Termination	_____	_____	_____
1 dB Step Attenuator	_____	_____	_____
10 dB Step Attenuator	_____	_____	_____

ManualsPlus.com

Table 3-5 Agilent E4403B Performance Verification Test Record

Microwave Spectrum Analyzer *(Option 1DN only)*	_____	_____	_____
Notes/comments:	_____		

Table 3-6 Agilent E4403B Performance Verification Test Record

Agilent Technologies

Model E4403B **Report No.** _____

Serial No. _____ **Date** _____

Test Description		**Minimum**	**Results Measured**	**Maximum**	**Measurement Uncertainty**
1.	**10 MHz Reference Output Accuracy**				
	Settability	–5.0 Hz	(1)_____	5.0 Hz	±293.3 µHz
3.	**Frequency Readout and Marker Frequency Count Accuracy**				
	Frequency Readout Accuracy				
	Center Freq Span				
	1500 MHz 20 MHz	1499.83 MHz	(1)_____	1500.17 MHz	±0 Hz
	1500 MHz 10 MHz	1499.91 MHz	(2)_____	1500.09 MHz	±0 Hz
	1500 MHz 1 MHz	1499.991 MHz	(3)_____	1500.009 MHz	±0 Hz
	4000 MHz 20 MHz	3999.83 MHz	(4)_____	4000.17 MHz	±0 Hz
	4000 MHz 10 MHz	3999.91 MHz	(5)_____	4000.09 MHz	±0 Hz
	4000 MHz 1 MHz	3999.991 MHz	(6)_____	4000.009 MHz	±0 Hz
	Marker Count Accuracy				
	Center Freq Span				
	1500 MHz 10 MHz	1499.999999 MHz	(4)_____	1500.000001 MHz	±0 Hz
	1500 MHz 1 MHz	1499.999999 MHz	(5)_____	1500.000001 MHz	±0 Hz

ManualsPlus.com

Table 3-6 Agilent E4403B Performance Verification Test Record

Agilent Technologies

Model E4403B **Report No.** _____

Serial No. _____ **Date** _____

Test Description		Minimum	Results Measured	Maximum	Measurement Uncertainty
6.	**Frequency Span Accuracy**				
	Span Start Freq				
	3000 MHz 0 Hz	2370 MHz	(1)_____	2430 MHz	±6.12 MHz
	100 MHz 10 MHz	79 MHz	(2)_____	81 MHz	±204 kHz
	100 kHz 10 MHz	79 kHz	(3)_____	81 kHz	±204 Hz
	100 MHz 800 MHz	79 MHz	(4)_____	81 MHz	±204 kHz
	100 kHz 800 MHz	79 kHz	(5)_____	81 kHz	±204 Hz
	100 MHz 1400 MHz	79 MHz	(6)_____	81 MHz	±204 kHz
	100 kHz 1499 MHz	79 kHz	(7)_____	81 kHz	±204 Hz
7.	**Noise Sidebands**				
	Offset from 1 GHz signal				
	10 kHz		(1)_____	–90 dBc/Hz	±2.44 dB
	20 kHz		(2)_____	–100 dBc/Hz	±2.44 dB
	30 kHz		(3)_____	–106 dBc/Hz	±2.44 dB
9.	**System-Related Sidebands**				
	Offset from 500 MHz signal				
	30 kHz to 230 kHz		(1)_____	–65 dBc	±1.30 dB
	–30 kHz to –230 kHz		(2)_____	–65 dBc	±1.30 dB
10.	**Residual FM**				
	1 kHz Res BW		(1)_____	150 Hz	±21 Hz
11.	**Sweep Time Accuracy**				
	Sweep Time				
	5 ms	–1.0%	(1)_____	1.0%	±0.16%

ManualsPlus.com

Table 3-6 Agilent E4403B Performance Verification Test Record

Agilent Technologies					
Model E4403B			**Report No. _____**		
Serial No. _____			**Date _____**		
Test Description		**Minimum**	**Results Measured**	**Maximum**	**Measurement Uncertainty**
	20 ms	–1.0%	(2)_____	1.0%	±0.16%
	100 ms	–1.0%	(3)_____	1.0%	±0.16%
	1 s	–1.0%	(4)_____	1.0%	±0.16%
	10 s	–1.0%	(5)_____	1.0%	±0.16%
12.	**Display Scale Fidelity**				
	Cumulative Log Fidelity, Res BW ≥1 kHz				
	dB from Ref Level				
	–4	–0.34 dB	(1)_____	0.34 dB	±0.082 dB
	–8	–0.38 dB	(2)_____	0.38 dB	±0.078 dB
	–12	–0.42 dB	(3)_____	0.42 dB	±0.075 dB
	–16	–0.46 dB	(4)_____	0.46 dB	±0.073 dB
	–20	–0.50 dB	(5)_____	0.50 dB	±0.078 dB
	–24	–0.54 dB	(6)_____	0.54 dB	±0.074 dB
	–28	–0.58 dB	(7)_____	0.58 dB	±0.073 dB
	–32	–0.62 dB	(8)_____	0.62 dB	±0.077 dB
	–36	–0.66 dB	(9)_____	0.66 dB	±0.075 dB
	–40	–0.70 dB	(10)_____	0.70 dB	±0.081 dB
	–44	–0.74 dB	(11)_____	0.74 dB	±0.077 dB
	–48	–0.78 dB	(12)_____	0.78 dB	±0.076 dB
	–52	–0.82 dB	(13)_____	0.82 dB	±0.080 dB
	–56	–0.86 dB	(14)_____	0.86 dB	±0.078 dB
	–60	–0.90 dB	(15)_____	0.90 dB	±0.084 dB
	–64	–0.94 dB	(16)_____	0.94 dB	±0.081 dB
	–68	–0.98 dB	(17)_____	0.98 dB	±0.080 dB
	–72	–1.02 dB	(18)_____	1.02 dB	±0.084 dB

ManualsPlus.com

Table 3-6 Agilent E4403B Performance Verification Test Record

Agilent Technologies

Model E4403B **Report No.** _____

Serial No. _____ **Date** _____

Test Description	Minimum	Results Measured	Maximum	Measurement Uncertainty
–76	–1.06 dB	(19)_____	1.06 dB	±0.083 dB
–80	–1.10 dB	(20)_____	1.10 dB	±0.089 dB
–84	–1.14 dB	(21)_____	1.14 dB	±0.086 dB
Incremental Log Fidelity, Res BW ≥1 kHz				
dB from Ref Level				
–4	–0.4 dB	(22)_____	0.4 dB	±0.082 dB
–8	–0.4 dB	(23)_____	0.4 dB	±0.078 dB
–12	–0.4 dB	(24)_____	0.4 dB	±0.075 dB
–16	–0.4 dB	(25)_____	0.4 dB	±0.073 dB
–20	–0.4 dB	(26)_____	0.4 dB	±0.078 dB
–24	–0.4 dB	(27)_____	0.4 dB	±0.074 dB
–28	–0.4 dB	(28)_____	0.4 dB	±0.073 dB
–32	–0.4 dB	(29)_____	0.4 dB	±0.077 dB
–36	–0.4 dB	(30)_____	0.4 dB	±0.075 dB
–40	–0.4 dB	(31)_____	0.4 dB	±0.081 dB
–44	–0.4 dB	(32)_____	0.4 dB	±0.077 dB
–48	–0.4 dB	(33)_____	0.4 dB	±0.076 dB
–52	–0.4 dB	(34)_____	0.4 dB	±0.080 dB
–56	–0.4 dB	(35)_____	0.4 dB	±0.078 dB
–60	–0.4 dB	(36)_____	0.4 dB	±0.084 dB
–64	–0.4 dB	(37)_____	0.4 dB	±0.081 dB
–68	–0.4 dB	(38)_____	0.4 dB	±0.080 dB
–72	–0.4 dB	(39)_____	0.4 dB	±0.084 dB
–76	–0.4 dB	(40)_____	0.4 dB	±0.083 dB
–80	–0.4 dB	(41)_____	0.4 dB	±0.089 dB

ManualsPlus.com

Table 3-6 Agilent E4403B Performance Verification Test Record

Agilent Technologies

Model E4403B **Report No.** _____

Serial No. _____ **Date** _____

Test Description		Minimum	Results Measured	Maximum	Measurement Uncertainty
	Cumulative Log Fidelity, Res BW ≤300 Hz *(Option 1DR only)*				
	dB from Ref Level				
	–4	–0.34 dB	(43)_____	0.34 dB	±0.082 dB
	–8	–0.38 dB	(44)_____	0.38 dB	±0.078 dB
	–12	–0.42 dB	(45)_____	0.42 dB	±0.075 dB
	–16	–0.46 dB	(46)_____	0.46 dB	±0.073 dB
	–20	–0.50 dB	(47)_____	0.50 dB	±0.078 dB
	–24	–0.54 dB	(48)_____	0.54 dB	±0.074 dB
	–28	–0.58 dB	(49)_____	0.58 dB	±0.073 dB
	–32	–0.62 dB	(50)_____	0.62 dB	±0.077 dB
	–36	–0.66 dB	(51)_____	0.66 dB	±0.075 dB
	–40	–0.70 dB	(52)_____	0.70 dB	±0.081 dB
	–44	–0.74 dB	(53)_____	0.74 dB	±0.077 dB
	–48	–0.78 dB	(54)_____	0.78 dB	±0.076 dB
	–52	–0.82 dB	(55)_____	0.82 dB	±0.080 dB
	–56	–0.86 dB	(56)_____	0.86 dB	±0.078 dB
	–60	–0.90 dB	(57)_____	0.90 dB	±0.084 dB
	–64	–0.94 dB	(58)_____	0.94 dB	±0.081 dB
	–68	–0.98 dB	(59)_____	0.98 dB	±0.080 dB
	–72	–1.02 dB	(60)_____	1.02 dB	±0.084 dB
	–76	–1.06 dB	(61)_____	1.06 dB	±0.083 dB
	–80	–1.10 dB	(62)_____	1.10 dB	±0.089 dB
	–84	–1.14 dB	(63)_____	1.14 dB	±0.086 dB
	–88	–1.18 dB	(64)_____	1.18 dB	±0.085 dB

ManualsPlus.com

Table 3-6 Agilent E4403B Performance Verification Test Record

Agilent Technologies

Model E4403B **Report No.** _____

Serial No. _____ **Date** _____

Test Description	Minimum	Results Measured	Maximum	Measurement Uncertainty
–92	–1.22 dB	(65)_____	1.22 dB	±0.100 dB
–96	–1.26 dB	(66)_____	1.26 dB	±0.099 dB
–98	–1.28 dB	(67)_____	1.28 dB	±0.098 dB
Incremental Log Fidelity, Res BW ≤300 Hz *(Option 1DR only)*				
dB from Ref Level				
–4	–0.4 dB	(68)_____	0.4 dB	±0.082 dB
–8	–0.4 dB	(69)_____	0.4 dB	±0.078 dB
–12	–0.4 dB	(70)_____	0.4 dB	±0.075 dB
–16	–0.4 dB	(71)_____	0.4 dB	±0.073 dB
–20	–0.4 dB	(72)_____	0.4 dB	±0.078 dB
–24	–0.4 dB	(73)_____	0.4 dB	±0.074 dB
–28	–0.4 dB	(74)_____	0.4 dB	±0.073 dB
–32	–0.4 dB	(75)_____	0.4 dB	±0.077 dB
–36	–0.4 dB	(76)_____	0.4 dB	±0.075 dB
–40	–0.4 dB	(77)_____	0.4 dB	±0.081 dB
–44	–0.4 dB	(78)_____	0.4 dB	±0.077 dB
–48	–0.4 dB	(79)_____	0.4 dB	±0.076 dB
–52	–0.4 dB	(80)_____	0.4 dB	±0.080 dB
–56	–0.4 dB	(81)_____	0.4 dB	±0.078 dB
–60	–0.4 dB	(82)_____	0.4 dB	±0.084 dB
–64	–0.4 dB	(83)_____	0.4 dB	±0.081 dB
–68	–0.4 dB	(84)_____	0.4 dB	±0.080 dB
–72	–0.4 dB	(85)_____	0.4 dB	±0.084 dB
–76	–0.4 dB	(86)_____	0.4 dB	±0.083 dB

ManualsPlus.com

Table 3-6 Agilent E4403B Performance Verification Test Record

Agilent Technologies

Model E4403B **Report No.** _____

Serial No. _____ **Date** _____

Test Description	Minimum	Results Measured	Maximum	Measurement Uncertainty
–80	–0.4 dB	(87)_____	0.4 dB	±0.089 dB
Linear Fidelity, Res BW ≥1 kHz				
dB from Ref Level				
–4	–2.0%	(93)_____	2.0%	±0.064%
–8	–2.0%	(94)_____	2.0%	±0.064%
–12	–2.0%	(95)_____	2.0%	±0.064%
–16	–2.0%	(96)_____	2.0%	±0.064%
–20	–2.0%	(97)_____	2.0%	±0.063%
Linear Fidelity, Res BW ≤300 Hz *(Option 1DR only)*				
dB from Ref Level				
–4	–2.0%	(98)_____	2.0%	±0.064%
–8	–2.0%	(99)_____	2.0%	±0.064%
–12	–2.0%	(100)_____	2.0%	±0.064%
–16	–2.0%	(101)_____	2.0%	±0.064%
–20	–2.0%	(102)_____	2.0%	±0.063%
Zero Span, Res BW ≤300 Hz *(Option 1DR only)*				
dB from Ref Level				
–4	–0.36 dB	(103)_____	0.36 dB	±0.082 dB
–8	–0.42 dB	(104)_____	0.42 dB	±0.078 dB
–12	–0.48 dB	(105)_____	0.48 dB	±0.075 dB
–16	–0.54 dB	(106)_____	0.54 dB	±0.073 dB
–20	–0.60 dB	(107)_____	0.60 dB	±0.078 dB
–24	–0.66 dB	(108)_____	0.66 dB	±0.074 dB

ManualsPlus.com

Table 3-6 Agilent E4403B Performance Verification Test Record

Agilent Technologies

Model E4403B **Report No.** _____

Serial No. _____ **Date** _____

Test Description		Minimum	Results Measured	Maximum	Measurement Uncertainty
	–28	–0.72 dB	(109)_____	0.72 dB	±0.073 dB
	–32	–0.78 dB	(110)_____	0.78 dB	±0.077 dB
	–36	–0.84 dB	(111)_____	0.84 dB	±0.075 dB
	–40	–0.90 dB	(112)_____	0.90 dB	±0.081 dB
	–44	–0.96 dB	(113)_____	0.96 dB	±0.077 dB
	–48	–1.02 dB	(114)_____	1.02 dB	±0.076 dB
	–52	–1.08 dB	(115)_____	1.08 dB	±0.080 dB
	–56	–1.14 dB	(116)_____	1.14 dB	±0.078 dB
	–60	–1.20 dB	(117)_____	1.20 dB	±0.084 dB
	–64	–1.5 dB	(118)_____	1.5 dB	±0.081 dB
	–68	–1.5 dB	(119)_____	1.5 dB	±0.080 dB
	–70	–1.5 dB	(120)_____	1.5 dB	±0.084 dB
13.	**Input Attenuation Switching Uncertainty**				
	Input Attenuation Setting				
	0 dB	–0.3 dB	(1)_____	0.3 dB	±0.101 dB
	5 dB	–0.3 dB	(2)_____	0.3 dB	±0.104 dB
	15 dB	–0.3 dB	(3)_____	0.3 dB	±0.102 dB
	20 dB	–0.3 dB	(4)_____	0.3 dB	±0.098 dB
	25 dB	–0.35 dB	(5)_____	0.35 dB	±0.098 dB
	30 dB	–0.40 dB	(6)_____	0.40 dB	±0.096 dB
	35 dB	–0.45 dB	(7)_____	0.45 dB	±0.099 dB
	40 dB	–0.50 dB	(8)_____	0.50 dB	±0.096 dB
	45 dB	–0.55 dB	(9)_____	0.55 dB	±0.099 dB
	50 dB	–0.60 dB	(10)_____	0.60 dB	±0.095 dB
	55 dB	–0.65 dB	(11)_____	0.65 dB	±0.099 dB

ManualsPlus.com

Table 3-6 Agilent E4403B Performance Verification Test Record

Agilent Technologies

Model E4403B **Report No.** _____

Serial No. _____ **Date** _____

Test Description		Minimum	Results Measured	Maximum	Measurement Uncertainty
	60 dB	–0.70 dB	(12)_____	0.70 dB	±0.100 dB
	65 dB	–0.75 dB	(13)_____	0.75 dB	±0.111 dB
15.	**Reference Level Accuracy**				
	Log				
	Reference Level				
	–10 dBm	–0.3 dB	(1)_____	0.3 dB	±0.091 dB
	0 dBm	–0.3 dB	(2)_____	0.3 dB	±0.100 dB
	–30 dBm	–0.3 dB	(3)_____	0.3 dB	±0.092 dB
	–40 dBm	–0.3 dB	(4)_____	0.3 dB	±0.094 dB
	–50 dBm	–0.5 dB	(5)_____	0.5 dB	±0.095 dB
	–60 dBm	–0.5 dB	(6)_____	0.5 dB	±0.097 dB
	–70 dBm	–0.5 dB	(7)_____	0.5 dB	±0.099 dB
	–80 dBm	–0.7 dB	(8)_____	0.7 dB	±0.101 dB
	Linear				
	Reference Level				
	–10 dBm	–0.3 dB	(9)_____	0.3 dB	±0.091 dB
	0 dBm	–0.3 dB	(10)_____	0.3 dB	±0.100 dB
	–30 dBm	–0.3 dB	(11)_____	0.3 dB	±0.092 dB
	–40 dBm	–0.3 dB	(12)_____	0.3 dB	±0.094 dB
	–50 dBm	–0.5 dB	(13)_____	0.5 dB	±0.095 dB
	–60 dBm	–0.5 dB	(14)_____	0.5 dB	±0.097 dB
	–70 dBm	–0.5 dB	(15)_____	0.5 dB	±0.099 dB
	–80 dBm	–0.7 dB	(16)_____	0.7 dB	±0.101 dB
16.	**Resolution Bandwidth Switching Uncertainty**				

ManualsPlus.com

Table 3-6 Agilent E4403B Performance Verification Test Record

Agilent Technologies

Model E4403B **Report No.** _____

Serial No. _____ **Date** _____

	Test Description	Minimum	Results Measured	Maximum	Measurement Uncertainty
	Resolution Bandwidth				
	3 kHz	–0.3 dB	(1)_____	0.3 dB	±0.048 dB
	9 kHz	–0.3 dB	(2)_____	0.3 dB	±0.048 dB
	10 kHz	–0.3 dB	(3)_____	0.3 dB	±0.048 dB
	30 kHz	–0.3 dB	(4)_____	0.3 dB	±0.048 dB
	100 kHz	–0.3 dB	(5)_____	0.3 dB	±0.048 dB
	120 kHz	–0.3 dB	(6)_____	0.3 dB	±0.048 dB
	300 kHz	–0.3 dB	(7)_____	0.3 dB	±0.048 dB
	1 MHz	–0.3 dB	(8)_____	0.3 dB	±0.048 dB
	3 MHz	–0.3 dB	(9)_____	0.3 dB	±0.048 dB
	5 MHz	–0.6 dB	(10)_____	0.6 dB	±0.076 dB
	300 Hz *(Option 1DR only)*	–3.0 dB	(11)_____	0.3 dB	±0.048 dB
	200 Hz *(Option 1DR only)*	–3.0 dB	(12)_____	0.3 dB	±0.048 dB
	100 Hz *(Option 1DR only)*	–3.0 dB	(13)_____	0.3 dB	±0.048 dB
18.	**Absolute Amplitude Accuracy (Reference Settings)**				
	Log, Preamp Off	–0.4 dB	(1)_____	0.4 dB	±0.09 dB
	Lin, Preamp Off	–0.4 dB	(2)_____	0.4 dB	±0.09 dB
20.	**Overall Absolute Amplitude Accuracy**				
	0 dBm Reference Level				
	0 dBm input	–0.6 dB	(1)_____	0.6 dB	±0.234 dB
	–10 dBm input	–0.6 dB	(2)_____	0.6 dB	±0.115 dB
	–20 dBm input	–0.6 dB	(3)_____	0.6 dB	±0.110 dB
	–30 dBm input	–0.6 dB	(4)_____	0.6 dB	±0.109 dB

ManualsPlus.com

Table 3-6 Agilent E4403B Performance Verification Test Record

Agilent Technologies

Model E4403B **Report No.** _____

Serial No. _____ **Date** _____

Test Description		Minimum	Results Measured	Maximum	Measurement Uncertainty
	–40 dBm input	–0.6 dB	(5)_____	0.6 dB	±0.109 dB
	–50 dBm input	–0.6 dB	(6)_____	0.6 dB	±0.109 dB
	–20 dBm Reference Level				
	–20 dBm input	–0.6 dB	(7)_____	0.6 dB	±0.109 dB
	–30 dBm input	–0.6 dB	(8)_____	0.6 dB	±0.109 dB
	–40 dBm input	–0.6 dB	(9)_____	0.6 dB	±0.109 dB
	–50 dBm input	–0.6 dB	(10)_____	0.6 dB	±0.109 dB
	–40 dBm Reference Level				
	–40 dBm input	–0.6 dB	(11)_____	0.6 dB	±0.087 dB
	–50 dBm input	–0.6 dB	(12)_____	0.6 dB	±0.087 dB
	–50 dBm Reference Level				
	–50 dBm input	–0.6 dB	(13)_____	0.6 dB	±0.087 dB
21.	**Resolution Bandwidth Accuracy**				
	Resolution Bandwidth				
	5 MHz	3.5 MHz	(1)_____	6.5 MHz	±110 kHz
	3 MHz	2.55 MHz	(2)_____	3.45 MHz	±66 kHz
	1 MHz	0.85 MHz	(3)_____	1.15 MHz	±22 kHz
	300 kHz	255 kHz	(4)_____	345 kHz	±6.6 kHz
	100 kHz	85 kHz	(5)_____	115 kHz	±2.2 kHz
	30 kHz	25.5 kHz	(6)_____	34.5 kHz	±660 Hz
	10 kHz	8.5 kHz	(7)_____	11.5 kHz	±220 Hz
	3 kHz	2.55 kHz	(8)_____	3.45 kHz	±66 Hz
	1 kHz	850 Hz	(9)_____	1.15 kHz	±22 Hz
	120 kHz	96 kHz	(10)_____	144 kHz	±2.17 kHz
	9 kHz	7.2 kHz	(11)_____	10.8 kHz	±163 Hz

ManualsPlus.com

Table 3-6 Agilent E4403B Performance Verification Test Record

Agilent Technologies					
Model E4403B			**Report No. _____**		
Serial No. _____			**Date _____**		
Test Description		**Minimum**	**Results Measured**	**Maximum**	**Measurement Uncertainty**
23.	**Frequency Response**	Note: Enter data in the appropriate section below depending upon the ambient temperature at which the test was performed.			
	20 to 30° C				
	Maximum Response		(1)_____	0.5 dB	±0.19 dB
	Minimum Response	–0.5 dB	(2)_____		±0.19 dB
	Peak-to-Peak Response		(3)_____	1.0 dB	±0.19 dB
	0 to 55° C				
	Maximum Response		(1)_____	1.0 dB	±0.19 dB
	Minimum Response	–1.0 dB	(2)_____		±0.19 dB
	Peak-to-Peak Response		(3)_____	2.0 dB	±0.19 dB
29.	**Other Input-Related Spurious Responses**				
	Input Frequency				
	2042.8 MHz		(1)_____	–65 dBc	±0.891 dB
	2642.8 MHz		(2)_____	–65 dBc	±0.891 dB
	1820.8 MHz		(3)_____	–65 dBc	±0.891 dB
	278.5 MHz		(4)_____	–65 dBc	±0.891 dB
31.	**Spurious Responses**	Note: Entry 2 does not apply to the Agilent E4403B.			
	300 MHz TOI	7.5 dBm	(1)_____		±0.93 dB
	300 MHz SHI	30 dBm	(3)_____		±0.41 dB
	900 MHz SHI	40 dBm	(4)_____		±0.41 dB
33.	**Gain Compression**	Note: Entry 2 does not apply to the Agilent E4403B.			
	Test Frequency				
	53 MHz		(1)_____	1.0 dB	±0.123 dB
	1403 MHz		(3)_____	1.0 dB	±0.123 dB
	2503 MHz		(4)_____	1.0 dB	±0.123 dB

ManualsPlus.com

Table 3-6 Agilent E4403B Performance Verification Test Record

Agilent Technologies

Model E4403B **Report No.** _____

Serial No. _____ **Date** _____

Test Description		Minimum	Results Measured	Maximum	Measurement Uncertainty
36.	**Displayed Average Noise Level**				
	1 kHz RBW				
	10 MHz to 1 GHz		(1)_____	–117 dBm	±1.23 dB
	1 GHz to 2 GHz		(2)_____	–116 dBm	±1.23 dB
	2 GHz to 3 GHz		(3)_____	–114 dBm	±1.23 dB
	100 Hz RBW				
	10 MHz to 1 GHz		(7)_____	–125 dBm	±1.23 dB
	1 GHz to 2 GHz		(8)_____	–124 dBm	±1.23 dB
	2 GHz to 3 GHz		(9)_____	–122 dBm	±1.23 dB
39.	**Residual Responses**				
	150 kHz to 3.0 GHz		(1)_____	–90 dBm	±0.87 dB
42.	**Tracking Generator Absolute Amplitude and Vernier Accuracy** *(Option 1DN only)*				
	Absolute Amplitude Accuracy	–0.75 dB	(1)_____	0.75 dB	±0.096 dB
	Absolute Vernier Accuracy				
	–2 dB	–0.5 dB	(2)_____	0.5 dB	±0.008 dB
	–3 dB	–0.5 dB	(3)_____	0.5 dB	±0.008 dB
	–5 dB	–0.5 dB	(4)_____	0.5 dB	±0.008 dB
	–6 dB	–0.5 dB	(5)_____	0.5 dB	±0.008 dB
	–7 dB	–0.5 dB	(6)_____	0.5 dB	±0.008 dB
	–8 dB	–0.5 dB	(7)_____	0.5 dB	±0.008 dB
	–9 dB	–0.5 dB	(8)_____	0.5 dB	±0.008 dB
	–10 dB	–0.5 dB	(9)_____	0.5 dB	±0.008 dB

ManualsPlus.com

Table 3-6 Agilent E4403B Performance Verification Test Record

Agilent Technologies

Model E4403B **Report No.** _____

Serial No. _____ **Date** _____

Test Description		Minimum	Results Measured	Maximum	Measurement Uncertainty
	Incremental Vernier Accuracy				
	–2 dB	–0.2 dB	(10)_____	0.2 dB	±0.008 dB
	–3 dB	–0.2 dB	(11)_____	0.2 dB	±0.008 dB
	–5 dB	–0.2 dB	(12)_____	0.2 dB	±0.008 dB
	–6 dB	–0.2 dB	(13)_____	0.2 dB	±0.008 dB
	–7 dB	–0.2 dB	(14)_____	0.2 dB	±0.008 dB
	–8 dB	–0.2 dB	(15)_____	0.2 dB	±0.008 dB
	–9 dB	–0.2 dB	(16)_____	0.2 dB	±0.008 dB
	–10 dB	–0.2 dB	(17)_____	0.2 dB	±0.008 dB
44.	**Tracking Generator Level Flatness** *(Option 1DN only)*				
	Positive Level Flatness, <1 MHz		(1)_____	3.0 dB	±0.284 dB
	Negative Level Flatness, <1 MHz	–3.0 dB	(2)_____		±0.284 dB
	Positive Level Flatness, 1 MHz to 10 MHz		(3)_____	3.0 dB	±0.142 dB
	Negative Level Flatness, 1 MHz to 10 MHz	–3.0 dB	(4)_____		±0.142 dB
	Positive Level Flatness, >10 MHz to 1.5 GHz		(5)_____	2.0 dB	±0.142 dB
	Negative Level Flatness, >10 MHz to 1.5 GHz	–2.0 dB	(6)_____		±0.142 dB
	Positive Level Flatness, >1.5 GHz		(7)_____	2.0 dB	±0.142 dB
	Negative Level Flatness, >1.5 GHz	–2.0 dB	(8)_____		±0.142 dB

ManualsPlus.com

Table 3-6 Agilent E4403B Performance Verification Test Record

Agilent Technologies					
Model E4403B			**Report No. _____**		
Serial No. _____			**Date _____**		
Test Description		**Minimum**	**Results Measured**	**Maximum**	**Measurement Uncertainty**
46.	**Tracking Generator Harmonic Spurious Outputs** *(Option 1DN only)*				
	2nd Harmonic, <20 kHz		(1)_____	–15 dBc	±2.6 dB
	2nd Harmonic, ≥20 kHz		(2)_____	–25 dBc	±2.6 dB
	3rd Harmonic, <20 kHz		(3)_____	–15 dBc	±2.6 dB
	3rd Harmonic, ≥20 kHz		(4)_____	–25 dBc	±2.6 dB
48.	**Tracking Generator Non-Harmonic Spurious Outputs** *(Option 1DN only)*				
	Highest Non-Harmonic Spurious Output Amplitude, 9 kHz to 2 GHz		(1)_____	–27 dBc	±2.63 dB
	Highest Non-Harmonic Spurious Output Amplitude, 2 GHz to 3 GHz		(2)_____	–23 dBc	±3.14 dB
49.	**Tracking Generator L.O. Feedthrough** *(Option 1DN only)*				
	9 kHz to 2.9 GHz		(1)_____	–16 dBm	±2.58 dB
	2.9 GHz to 3.0 GHz		(2)_____	–16 dBm	±3.08 dB

ManualsPlus.com

Agilent E4404B Performance Verification Test Record

Tests for the Agilent E4404B only are included in this test record, therefore not all test numbers are included.

Table 3-7 Agilent E4404B Performance Verification Test Record

Agilent Technologies

Address: _____ Report No. _____

_____ Date _____

_____

Model E4404B

Serial No. _____ Ambient temperature _____° C

Options _____ Relative humidity _____%

Firmware Revision _____ Power mains line frequency _____ Hz (nominal)

Customer _____ Tested by _____

Test Equipment Used:

Description	Model No.	Trace No.	Cal Due Date
Synthesized Signal Generator	_____	_____	_____
Wide Offset Phase Noise Signal Generator	_____	_____	_____
Synthesized Sweeper #1	_____	_____	_____
Synthesized Sweeper #2	_____	_____	_____
Function Generator	_____	_____	_____
Power Meter, Dual-Channel	_____	_____	_____
RF Power Sensor #1	_____	_____	_____
RF Power Sensor #2	_____	_____	_____
Microwave Power Sensor	_____	_____	_____
Low-Power Power Sensor	_____	_____	_____
Digital Multimeter	_____	_____	_____
Universal Counter	_____	_____	_____
Frequency Standard	_____	_____	_____

ManualsPlus.com

Table 3-7 Agilent E4404B Performance Verification Test Record

Power Splitter	_____	_____	_____
50 Ω Termination	_____	_____	_____
1 dB Step Attenuator	_____	_____	_____
10 dB Step Attenuator	_____	_____	_____
Oscilloscope *(Option 1D6 only)*	_____	_____	_____
Microwave Spectrum Analyzer *(Option 1DN only)*	_____	_____	_____
Notes/comments:	_____		
	_____		

Table 3-8 Agilent E4404B Performance Verification Test Record

Agilent Technologies

Model E4404B **Report No.** _____

Serial No. _____ **Date** _____

Test Description		**Minimum**	**Results Measured**	**Maximum**	**Measurement Uncertainty**
1.	**10 MHz Reference Accuracy** (*Non-Option 1D5 only*)				
	Settability	–5.0 Hz	(1)_____	5.0 Hz	±293.3 µHz
2.	**10 MHz High-Stability Frequency Reference Output Accuracy** (*Option 1D5 only*)				
	5 Minute Warm-Up Error	–0.1 ppm	(1)_____	0.1 ppm	±0.000072 ppm
	15 Minute Warm-Up Error	–0.01 ppm	(2)_____	0.01 ppm	±0.000070 ppm
4.	**Frequency Readout and Marker Frequency Count Accuracy**				
	Frequency Readout Accuracy				
	Center Freq Span				
	1500 MHz 20 MHz	1499.83 MHz	(1)_____	1500.17 MHz	±0 Hz
	1500 MHz 10 MHz	1499.91 MHz	(2)_____	1500.09 MHz	±0 Hz

ManualsPlus.com

Table 3-8 Agilent E4404B Performance Verification Test Record

Agilent Technologies					
Model E4404B			**Report No. _____**		
Serial No. _____			**Date _____**		
Test Description		**Minimum**	**Results Measured**	**Maximum**	**Measurement Uncertainty**
	1500 MHz 1 MHz	1499.991 MHz	(3)_____	1500.009 MHz	±0 Hz
	4000 MHz 20 MHz	3999.83 MHz	(4)_____	4000.17 MHz	±0 Hz
	4000 MHz 10 MHz	3999.91 MHz	(5)_____	4000.09 MHz	±0 Hz
	4000 MHz 1 MHz	3999.991 MHz	(6)_____	4000.009 MHz	±0 Hz
	Marker Count Accuracy				
	Center Freq Span				
	1500 MHz 20 MHz	1499.999999 MHz	(16)_____	1500.000001 MHz	±0 Hz
	1500 MHz 1 MHz	1499.999999 MHz	(17)_____	1500.000001 MHz	±0 Hz
	4000 MHz 20 MHz	3999.999999 MHz	(18)_____	4000.000001 MHz	±0 Hz
	4000 MHz 1 MHz	3999.999999 MHz	(19)_____	4000.000001 MHz	±0 Hz
6.	**Frequency Span Accuracy**				
	Span Start Freq				
	3000 MHz 0 Hz	2370 MHz	(1)_____	2430 MHz	±6.12 MHz
	100 MHz 10 MHz	79 MHz	(2)_____	81 MHz	±204 kHz
	100 kHz 10 MHz	79 kHz	(3)_____	81 kHz	±204 Hz
	100 MHz 800 MHz	79 MHz	(4)_____	81 MHz	±204 kHz
	100 kHz 800 MHz	79 kHz	(5)_____	81 kHz	±204 Hz
	100 MHz 1400 MHz	79 MHz	(6)_____	81 MHz	±204 kHz
	100 kHz 1499 MHz	79 kHz	(7)_____	81 kHz	±204 Hz

ManualsPlus.com

Table 3-8 Agilent E4404B Performance Verification Test Record

Agilent Technologies					
Model E4404B			**Report No. _____**		
Serial No. _____			**Date _____**		
Test Description		**Minimum**	**Results Measured**	**Maximum**	**Measurement Uncertainty**
7.	**Noise Sidebands**				
	Offset from 1 GHz signal				
	(Serial Prefix < US4510, SG4510 or MY4510)				
	10 kHz		(1)_____	–90 dBc/Hz	±2.44 dB
	20 kHz		(2)_____	–100 dBc/Hz	±2.44 dB
	30 kHz		(3)_____	–106 dBc/Hz	±2.44 dB
	(Serial Prefix ≥ US4510, SG4510 or MY4510, Option 1DR)				
	10 kHz		(1)_____	–98 dBc/Hz	±2.44 dB
	20 kHz		(2)_____	–104 dBc/Hz	±2.44 dB
	30 kHz		(3)_____	–110 dBc/Hz	±2.44 dB
	(Serial Prefix ≥ US4510, SG4510 or MY4510, Non-Option 1DR)				
	10 kHz		(1)_____	–90 dBc/Hz	±2.44 dB
	20 kHz		(2)_____	–104 dBc/Hz	±2.44 dB
	30 kHz		(3)_____	–110 dBc/Hz	±2.44 dB
8.	**Noise Sidebands - Wide Offsets**	Note: Enter data in the appropriate section below depending upon whether or not Option 120 (ACPR Dynamic Range Extension) is installed.			
	Non-Option 120				
	Offset from 1 GHz signal				
	100 kHz		(1)_____	–118 dBc/Hz	±2.44 dB
	1 MHz		(2)_____	–125 dBc/Hz	±2.44 dB
	5 MHz		(3)_____	–127 dBc/Hz	±2.44 dB
	10 MHz		(4)_____	–131 dBc/Hz	±2.44 dB

ManualsPlus.com

Table 3-8 Agilent E4404B Performance Verification Test Record

Agilent Technologies					
Model E4404B			**Report No. _____**		
Serial No. _____			**Date _____**		
Test Description		**Minimum**	**Results Measured**	**Maximum**	**Measurement Uncertainty**
	Option 120				
	Offset from 1 GHz signal				
	100 kHz		(1)_____	–118 dBc/Hz	±2.44 dB
	1 MHz		(2)_____	–133 dBc/Hz	±2.44 dB
	5 MHz		(3)_____	–135 dBc/Hz	±2.44 dB
	10 MHz		(4)_____	–137 dBc/Hz	±2.44 dB
9.	**System-Related Sidebands**				
	Offset from 500 MHz signal				
	30 kHz to 230 kHz		(1)_____	–65 dBc	±1.30 dB
	–30 kHz to –230 kHz		(2)_____	–65 dBc	±1.30 dB
10.	**Residual FM**				
	1 kHz Res BW, (*Non-Option 1D5)*		(1)_____	150 Hz	±21 Hz
	1 kHz Res BW, (*Option 1D5)*		(1)_____	100 Hz	±21 Hz
	10 Hz Res BW (*Options 1DR and 1D5 only*)		(2)_____	2 Hz	±0.27 Hz
11.	**Sweep Time Accuracy**				
	Sweep Time				
	5 ms	–1.0%	(1)_____	1.0%	±0.16%
	20 ms	–1.0%	(2)_____	1.0%	±0.16%
	100 ms	–1.0%	(3)_____	1.0%	±0.16%
	1 s	–1.0%	(4)_____	1.0%	±0.16%
	10 s	–1.0%	(5)_____	1.0%	±0.16%

ManualsPlus.com

Table 3-8 Agilent E4404B Performance Verification Test Record

Agilent Technologies

Model E4404B **Report No.** _____

Serial No. _____ **Date** _____

	Test Description	Minimum	Results Measured	Maximum	Measurement Uncertainty
	1 ms (*Option AYX or B7D only)*	–1.0%	(6)_____	1.0%	±0.16%
	500 µs (*Option AYX or B7D only)*	–1.0%	(7)_____	1.0%	±0.16%
	100 µs (*Option AYX or B7D only)*	–1.0%	(8)_____	1.0%	±0.16%
12.	**Display Scale Fidelity**				
	Cumulative Log Fidelity, Res BW ≥1 kHz				
	dB from Ref Level				
	–4	–0.30 dB	(1)_____	0.30 dB	±0.082 dB
	–8	–0.30 dB	(2)_____	0.30 dB	±0.078 dB
	–12	–0.40 dB	(3)_____	0.40 dB	±0.075 dB
	–16	–0.40 dB	(4)_____	0.40 dB	±0.073 dB
	–20	–0.40 dB	(5)_____	0.40 dB	±0.078 dB
	–24	–0.50 dB	(6)_____	0.50 dB	±0.074 dB
	–28	–0.50 dB	(7)_____	0.50 dB	±0.073 dB
	–32	–0.60 dB	(8)_____	0.60 dB	±0.077 dB
	–36	–0.60 dB	(9)_____	0.60 dB	±0.075 dB
	–40	–0.60 dB	(10)_____	0.60 dB	±0.081 dB
	–44	–0.70 dB	(11)_____	0.70 dB	±0.077 dB
	–48	–0.70 dB	(12)_____	0.70 dB	±0.076 dB
	–52	–0.70dB	(13)_____	0.70 dB	±0.080 dB
	–56	–0.70 dB	(14)_____	0.70 dB	±0.078 dB
	–60	–0.70 dB	(15)_____	0.70 dB	±0.084 dB
	–64	–0.80 dB	(16)_____	0.80 dB	±0.081 dB
	–68	–0.80 dB	(17)_____	0.80 dB	±0.080 dB

ManualsPlus.com

Table 3-8 Agilent E4404B Performance Verification Test Record

Agilent Technologies

Model E4404B **Report No.** _____

Serial No. _____ **Date** _____

Test Description	Minimum	Results Measured	Maximum	Measurement Uncertainty
–72	–0.80 dB	(18)_____	0.80 dB	±0.084 dB
–76	–0.80 dB	(19)_____	0.80 dB	±0.083 dB
–80	–0.80 dB	(20)_____	0.80 dB	±0.089 dB
–84	–1.15 dB	(21)_____	1.15 dB	±0.086 dB
Incremental Log Fidelity, Res BW ≥1 kHz				
dB from Ref Level				
–4	–0.4 dB	(22)_____	0.4 dB	±0.082 dB
–8	–0.4 dB	(23)_____	0.4 dB	±0.078 dB
–12	–0.4 dB	(24)_____	0.4 dB	±0.075 dB
–16	–0.4 dB	(25)_____	0.4 dB	±0.073 dB
–20	–0.4 dB	(26)_____	0.4 dB	±0.078 dB
–24	–0.4 dB	(27)_____	0.4 dB	±0.074 dB
–28	–0.4 dB	(28)_____	0.4 dB	±0.073 dB
–32	–0.4 dB	(29)_____	0.4 dB	±0.077 dB
–36	–0.4 dB	(30)_____	0.4 dB	±0.075 dB
–40	–0.4 dB	(31)_____	0.4 dB	±0.081 dB
–44	–0.4 dB	(32)_____	0.4 dB	±0.077 dB
–48	–0.4 dB	(33)_____	0.4 dB	±0.076 dB
–52	–0.4 dB	(34)_____	0.4 dB	±0.080 dB
–56	–0.4 dB	(35)_____	0.4 dB	±0.078 dB
–60	–0.4 dB	(36)_____	0.4 dB	±0.084 dB
–64	–0.4 dB	(37)_____	0.4 dB	±0.081 dB
–68	–0.4 dB	(38)_____	0.4 dB	±0.080 dB
–72	–0.4 dB	(39)_____	0.4 dB	±0.084 dB
–76	–0.4 dB	(40)_____	0.4 dB	±0.083 dB

ManualsPlus.com

Table 3-8 Agilent E4404B Performance Verification Test Record

Agilent Technologies					
Model E4404B			**Report No. _____**		
Serial No. _____			**Date _____**		
Test Description		**Minimum**	**Results Measured**	**Maximum**	**Measurement Uncertainty**
	–80	–0.4 dB	(41)_____	0.4 dB	±0.089 dB
	Cumulative Log Fidelity, Res BW ≤300 Hz *(Option 1DR only)*				
	dB from Ref Level				
	–4	–0.34 dB	(43)_____	0.34 dB	±0.082 dB
	–8	–0.38 dB	(44)_____	0.38 dB	±0.078 dB
	–12	–0.42 dB	(45)_____	0.42 dB	±0.075 dB
	–16	–0.46 dB	(46)_____	0.46 dB	±0.073 dB
	–20	–0.50 dB	(47)_____	0.50 dB	±0.078 dB
	–24	–0.54 dB	(48)_____	0.54 dB	±0.074 dB
	–28	–0.58 dB	(49)_____	0.58 dB	±0.073 dB
	–32	–0.62 dB	(50)_____	0.62 dB	±0.077 dB
	–36	–0.66 dB	(51)_____	0.66 dB	±0.075 dB
	–40	–0.70 dB	(52)_____	0.70 dB	±0.081 dB
	–44	–0.74 dB	(53)_____	0.74 dB	±0.077 dB
	–48	–0.78 dB	(54)_____	0.78 dB	±0.076 dB
	–52	–0.82 dB	(55)_____	0.82 dB	±0.080 dB
	–56	–0.86 dB	(56)_____	0.86 dB	±0.078 dB
	–60	–0.90 dB	(57)_____	0.90 dB	±0.084 dB
	–64	–0.94 dB	(58)_____	0.94 dB	±0.081 dB
	–68	–0.98 dB	(59)_____	0.98 dB	±0.080 dB
	–72	–1.02 dB	(60)_____	1.02 dB	±0.084 dB
	–76	–1.06 dB	(61)_____	1.06 dB	±0.083 dB
	–80	–1.10 dB	(62)_____	1.10 dB	±0.089 dB
	–84	–1.14 dB	(63)_____	1.14 dB	±0.086 dB

ManualsPlus.com

Table 3-8 Agilent E4404B Performance Verification Test Record

Agilent Technologies

Model E4404B **Report No.** _____

Serial No. _____ **Date** _____

Test Description	Minimum	Results Measured	Maximum	Measurement Uncertainty
–88	–1.18 dB	(64)_____	1.18 dB	±0.085 dB
–92	–1.22 dB	(65)_____	1.22 dB	±0.100 dB
–96	–1.26 dB	(66)_____	1.26 dB	±0.099 dB
–98	–1.28 dB	(67)_____	1.28 dB	±0.098 dB
Incremental Log Fidelity, Res BW ≤300 Hz *(Option 1DR only)*				
dB from Ref Level				
–4	–0.4 dB	(68)_____	0.4 dB	±0.082 dB
–8	–0.4 dB	(69)_____	0.4 dB	±0.078 dB
–12	–0.4 dB	(70)_____	0.4 dB	±0.075 dB
–16	–0.4 dB	(71)_____	0.4 dB	±0.073 dB
–20	–0.4 dB	(72)_____	0.4 dB	±0.078 dB
–24	–0.4 dB	(73)_____	0.4 dB	±0.074 dB
–28	–0.4 dB	(74)_____	0.4 dB	±0.073 dB
–32	–0.4 dB	(75)_____	0.4 dB	±0.077 dB
–36	–0.4 dB	(76)_____	0.4 dB	±0.075 dB
–40	–0.4 dB	(77)_____	0.4 dB	±0.081 dB
–44	–0.4 dB	(78)_____	0.4 dB	±0.077 dB
–48	–0.4 dB	(79)_____	0.4 dB	±0.076 dB
–52	–0.4 dB	(80)_____	0.4 dB	±0.080 dB
–56	–0.4 dB	(81)_____	0.4 dB	±0.078 dB
–60	–0.4 dB	(82)_____	0.4 dB	±0.084 dB
–64	–0.4 dB	(83)_____	0.4 dB	±0.081 dB
–68	–0.4 dB	(84)_____	0.4 dB	±0.080 dB
–72	–0.4 dB	(85)_____	0.4 dB	±0.084 dB

ManualsPlus.com

Table 3-8 Agilent E4404B Performance Verification Test Record

Agilent Technologies

Model E4404B **Report No.** _____

Serial No. _____ **Date** _____

Test Description	Minimum	Results Measured	Maximum	Measurement Uncertainty
–76	–0.4 dB	(86)_____	0.4 dB	±0.083 dB
–80	–0.4 dB	(87)_____	0.4 dB	±0.089 dB
Linear Fidelity, Res BW ≥1 kHz				
dB from Ref Level				
–4	–2.0%	(93)_____	2.0%	±0.064%
–8	–2.0%	(94)_____	2.0%	±0.064%
–12	–2.0%	(95)_____	2.0%	±0.064%
–16	–2.0%	(96)_____	2.0%	±0.064%
–20	–2.0%	(97)_____	2.0%	±0.063%
Linear Fidelity, Res BW ≤300 Hz *(Option 1DR only)*				
dB from Ref Level				
–4	–2.0%	(98)_____	2.0%	±0.064%
–8	–2.0%	(99)_____	2.0%	±0.064%
–12	–2.0%	(100)_____	2.0%	±0.064%
–16	–2.0%	(101)_____	2.0%	±0.064%
–20	–2.0%	(102)_____	2.0%	±0.063%
Zero Span, Res BW ≤300 Hz *(Option 1DR only)*				
dB from Ref Level				
–4	–0.36 dB	(103)_____	0.36 dB	±0.082 dB
–8	–0.42 dB	(104)_____	0.42 dB	±0.078 dB
–12	–0.48 dB	(105)_____	0.48 dB	±0.075 dB
–16	–0.54 dB	(106)_____	0.54 dB	±0.073 dB
–20	–0.60 dB	(107)_____	0.60 dB	±0.078 dB

ManualsPlus.com

Table 3-8 Agilent E4404B Performance Verification Test Record

Agilent Technologies

Model E4404B **Report No.** _____

Serial No. _____ **Date** _____

Test Description		Minimum	Results Measured	Maximum	Measurement Uncertainty
	–24	–0.66 dB	(108)_____	0.66 dB	±0.074 dB
	–28	–0.72 dB	(109)_____	0.72 dB	±0.073 dB
	–32	–0.78 dB	(110)_____	0.78 dB	±0.077 dB
	–36	–0.84 dB	(111)_____	0.84 dB	±0.075 dB
	–40	–0.90 dB	(112)_____	0.90 dB	±0.081 dB
	–44	–0.96 dB	(113)_____	0.96 dB	±0.077 dB
	–48	–1.02 dB	(114)_____	1.02 dB	±0.076 dB
	–52	–1.08 dB	(115)_____	1.08 dB	±0.080 dB
	–56	–1.14 dB	(116)_____	1.14 dB	±0.078 dB
	–60	–1.20 dB	(117)_____	1.20 dB	±0.084 dB
	–64	–1.5 dB	(118)_____	1.5 dB	±0.081 dB
	–68	–1.5 dB	(119)_____	1.5 dB	±0.080 dB
	–70	–1.5 dB	(120)_____	1.5 dB	±0.084 dB
13.	**Input Attenuation Switching Uncertainty**				
	Input Attenuation Setting				
	0 dB	–0.3 dB	(1)_____	0.3 dB	±0.101 dB
	5 dB	–0.3 dB	(2)_____	0.3 dB	±0.104 dB
	15 dB	–0.3 dB	(3)_____	0.3 dB	±0.102 dB
	20 dB	–0.3 dB	(4)_____	0.3 dB	±0.098 dB
	25 dB	–0.35 dB	(5)_____	0.35 dB	±0.098 dB
	30 dB	–0.40 dB	(6)_____	0.40 dB	±0.096 dB
	35 dB	–0.45 dB	(7)_____	0.45 dB	±0.099 dB
	40 dB	–0.50 dB	(8)_____	0.50 dB	±0.096 dB
	45 dB	–0.55 dB	(9)_____	0.55 dB	±0.099 dB
	50 dB	–0.60 dB	(10)_____	0.60 dB	±0.095 dB

ManualsPlus.com

Table 3-8 Agilent E4404B Performance Verification Test Record

Agilent Technologies

Model E4404B **Report No.** _____

Serial No. _____ **Date** _____

Test Description		Minimum	Results Measured	Maximum	Measurement Uncertainty
	55 dB	–0.65 dB	(11)_____	0.65 dB	±0.099 dB
	60 dB	–0.70 dB	(12)_____	0.70 dB	±0.100 dB
	65 dB	–0.75 dB	(13)_____	0.75 dB	±0.111 dB
15.	**Reference Level Accuracy**				
	Log, Res BW ≥1 kHz				
	Reference Level				
	–10 dBm	–0.3 dB	(1)_____	0.3 dB	±0.091 dB
	0 dBm	–0.3 dB	(2)_____	0.3 dB	±0.100 dB
	–30 dBm	–0.3 dB	(3)_____	0.3 dB	±0.092 dB
	–40 dBm	–0.3 dB	(4)_____	0.3 dB	±0.094 dB
	–50 dBm	–0.5 dB	(5)_____	0.5 dB	±0.095 dB
	–60 dBm	–0.5 dB	(6)_____	0.5 dB	±0.097 dB
	–70 dBm	–0.5 dB	(7)_____	0.5 dB	±0.099 dB
	–80 dBm	–0.7 dB	(8)_____	0.7 dB	±0.101 dB
	Linear, Res BW ≥1 kHz				
	Reference Level				
	–10 dBm	–0.3 dB	(9)_____	0.3 dB	±0.091 dB
	0 dBm	–0.3 dB	(10)_____	0.3 dB	±0.100 dB
	–30 dBm	–0.3 dB	(11)_____	0.3 dB	±0.092 dB
	–40 dBm	–0.3 dB	(12)_____	0.3 dB	±0.094 dB
	–50 dBm	–0.5 dB	(13)_____	0.5 dB	±0.095 dB
	–60 dBm	–0.5 dB	(14)_____	0.5 dB	±0.097 dB
	–70 dBm	–0.5 dB	(15)_____	0.5 dB	±0.099 dB
	–80 dBm	–0.7 dB	(16)_____	0.7 dB	±0.101 dB

ManualsPlus.com

Table 3-8 Agilent E4404B Performance Verification Test Record

Agilent Technologies

Model E4404B **Report No.** _____

Serial No. _____ **Date** _____

	Test Description	Minimum	Results Measured	Maximum	Measurement Uncertainty
	Log, Res BW ≤300 Hz *(Option 1DR only)*				
	Reference Level				
	–10 dBm	–0.3 dB	(17)_____	0.3 dB	±0.091 dB
	0 dBm	–0.3 dB	(18)_____	0.3 dB	±0.100 dB
	–30 dBm	–0.3 dB	(19)_____	0.3 dB	±0.092 dB
	–40 dBm	–0.3 dB	(20)_____	0.3 dB	±0.094 dB
	–50 dBm	–0.5 dB	(21)_____	0.5 dB	±0.095 dB
	–60 dBm	–0.5 dB	(22)_____	0.5 dB	±0.097 dB
	–70 dBm	–0.5 dB	(23)_____	0.5 dB	±0.099 dB
	–80 dBm	–0.7 dB	(24)_____	0.7 dB	±0.101 dB
	Linear, Res BW ≤300 Hz *(Option 1DR only)*				
	Reference Level				
	–10 dBm	–0.3 dB	(25)_____	0.3 dB	±0.091 dB
	0 dBm	–0.3 dB	(26)_____	0.3 dB	±0.100 dB
	–30 dBm	–0.3 dB	(27)_____	0.3 dB	±0.092 dB
	–40 dBm	–0.3 dB	(28)_____	0.3 dB	±0.094 dB
	–50 dBm	–0.5 dB	(29)_____	0.5 dB	±0.095 dB
	–60 dBm	–0.5 dB	(30)_____	0.5 dB	±0.097 dB
	–70 dBm	–0.5 dB	(31)_____	0.5 dB	±0.099 dB
	–80 dBm	–0.7 dB	(32)_____	0.7 dB	±0.101 dB
16.	**Resolution Bandwidth Switching Uncertainty**				
	Resolution Bandwidth				
	3 kHz	–0.3 dB	(1)_____	0.3 dB	±0.048 dB
	9 kHz	–0.3 dB	(2)_____	0.3 dB	±0.048 dB

ManualsPlus.com

Table 3-8 Agilent E4404B Performance Verification Test Record

Agilent Technologies					
Model E4404B			**Report No. _____**		
Serial No. _____			**Date _____**		
Test Description		**Minimum**	**Results Measured**	**Maximum**	**Measurement Uncertainty**
	10 kHz	–0.3 dB	(3)_____	0.3 dB	±0.048 dB
	30 kHz	–0.3 dB	(4)_____	0.3 dB	±0.048 dB
	100 kHz	–0.3 dB	(5)_____	0.3 dB	±0.048 dB
	120 kHz	–0.3 dB	(6)_____	0.3 dB	±0.048 dB
	300 kHz	–0.3 dB	(7)_____	0.3 dB	±0.048 dB
	1 MHz	–0.3 dB	(8)_____	0.3 dB	±0.048 dB
	3 MHz	–0.3 dB	(9)_____	0.3 dB	±0.048 dB
	5 MHz	–0.6 dB	(10)_____	0.6 dB	±0.076 dB
	300 Hz *(Option 1DR only)*	–0.3 dB	(11)_____	0.3 dB	±0.048 dB
	200 Hz *(Option 1DR only)*	–0.3 dB	(12)_____	0.3 dB	±0.048 dB
	100 Hz *(Option 1DR only)*	–0.3 dB	(13)_____	0.3 dB	±0.048 dB
	30 Hz *(Option 1DR only)*	–0.3 dB	(14)_____	0.3 dB	±0.048 dB
	10 Hz *(Option 1DR only)*	–0.3 dB	(15)_____	0.3 dB	±0.048 dB
	3 Hz *(Option 1DR and 1D5 only)* Firmware Revision A.08.00 or later	–0.3 dB	(16)_____	0.3 dB	±0.048 dB
	1Hz *(Option 1DR and 1D5 only)* Firmware Revision A.08.00 or later	–0.3 dB	(17)_____	0.3 dB	±0.048 dB
18.	**Absolute Amplitude Accuracy (Reference Settings)**				
	Log, Preamp Off	–0.34 dB	(1)_____	0.34 dB	±0.09 dB
	Lin, Preamp Off	–0.34 dB	(2)_____	0.34 dB	±0.09 dB
	Log, Preamp On *(Option 1DS only)*	–0.37 dB	(3)_____	0.37 dB	±0.09 dB
	Lin, Preamp On *(Option 1DS only)*	–0.37 dB	(4)_____	0.37 dB	±0.09 dB
20.	**Overall Absolute Amplitude Accuracy**				

ManualsPlus.com

Table 3-8 Agilent E4404B Performance Verification Test Record

Agilent Technologies

Model E4404B **Report No.** _____

Serial No. _____ **Date** _____

	Test Description	Minimum	Results Measured	Maximum	Measurement Uncertainty
	0 dBm Reference Level				
	0 dBm input	–0.54 dB	(1)_____	0.54 dB	±0.234 dB
	–10 dBm input	–0.54 dB	(2)_____	0.54 dB	±0.115 dB
	–20 dBm input	–0.54 dB	(3)_____	0.54 dB	±0.110 dB
	–30 dBm input	–0.54 dB	(4)_____	0.54 dB	±0.109 dB
	–40 dBm input	–0.54 dB	(5)_____	0.54 dB	±0.109 dB
	–50 dBm input	–0.54 dB	(6)_____	0.54 dB	±0.109 dB
	–20 dBm Reference Level				
	–20 dBm input	–0.54 dB	(7)_____	0.54 dB	±0.109 dB
	–30 dBm input	–0.54 dB	(8)_____	0.54 dB	±0.109 dB
	–40 dBm input	–0.54 dB	(9)_____	0.54 dB	±0.109 dB
	–50 dBm input	–0.54 dB	(10)_____	0.54 dB	±0.109 dB
	–40 dBm Reference Level				
	–40 dBm input	–0.54 dB	(11)_____	0.54 dB	±0.087 dB
	–50 dBm input	–0.54 dB	(12)_____	0.54 dB	±0.087 dB
	–50 dBm Reference Level				
	–50 dBm input	–0.54 dB	(13)_____	0.54 dB	±0.087 dB
21.	**Resolution Bandwidth Accuracy**				
	Resolution Bandwidth				
	5 MHz	3.5 MHz	(1)_____	6.5 MHz	±110 kHz
	3 MHz	2.55 MHz	(2)_____	3.45 MHz	±66 kHz
	1 MHz	0.85 MHz	(3)_____	1.15 MHz	±22 kHz
	300 kHz	255 kHz	(4)_____	345 kHz	±6.6 kHz
	100 kHz	85 kHz	(5)_____	115 kHz	±2.2 kHz
	30 kHz	25.5 kHz	(6)_____	34.5 kHz	±660 Hz

ManualsPlus.com

Table 3-8 Agilent E4404B Performance Verification Test Record

Agilent Technologies					
Model E4404B			**Report No. _____**		
Serial No. _____			**Date _____**		
Test Description		**Minimum**	**Results Measured**	**Maximum**	**Measurement Uncertainty**
	10 kHz	8.5 kHz	(7)_____	11.5 kHz	±220 Hz
	3 kHz	2.55 kHz	(8)_____	3.45 kHz	±66 Hz
	1 kHz	850 Hz	(9)_____	1.15 kHz	±22 Hz
	120 kHz	96 kHz	(10)_____	144 kHz	±2.17 kHz
	9 kHz	7.2 kHz	(11)_____	10.8 kHz	±163 Hz
24.	**Frequency Response**	Note: Enter data in the appropriate section below depending upon the ambient temperature at which the test was performed and installed options.			
	20 to 30° C				
	Non-Option UKB dc Coupled Band 0 (9 kHz to 3.0 GHz)				
	Maximum Response		(1)_____	0.46 dB	±0.19 dB
	Minimum Response	–0.46 dB	(2)_____		±0.19 dB
	Peak-to-Peak Response		(3)_____	0.92 dB	±0.19 dB
	Option UKB dc Coupled Band 0 (100 Hz to 3.0 GHz)				
	Maximum Response		(1)_____	0.50 dB	±0.19 dB
	Minimum Response	–0.50 dB	(2)_____		±0.19 dB
	Peak-to-Peak Response		(3)_____	1.0 dB	±0.19 dB
	dc Coupled Band 1 (3.0 GHz to 6.7 GHz)				
	Maximum Response		(4)_____	1.5 dB	±0.39 dB
	Minimum Response	–1.5 dB	(5)_____		±0.39 dB

ManualsPlus.com

Table 3-8 Agilent E4404B Performance Verification Test Record

Agilent Technologies

Model E4404B **Report No.** _____

Serial No. _____ **Date** _____

Test Description	Minimum	Results Measured	Maximum	Measurement Uncertainty
Peak-to-Peak Response		(6)_____	2.6 dB	±0.39 dB
ac Coupled Band 0 (100 kHz to 3.0 GHz)				
Maximum Response		(10)_____	0.5 dB	±0.11 dB
Minimum Response	–0.5 dB	(11)_____		±0.11 dB
Peak-to-Peak Response		(12)_____	1.0 dB	±0.11 dB
ac Coupled Band 0A (800 MHz to 1.0 GHz) (serial number US39440498 or greater)				
Maximum Response		(13)_____	0.5 dB	±0.11 dB
Minimum Response	–0.5 dB	(14)_____		±0.11 dB
Peak-to-Peak Response		(15)_____	1.0 dB	±0.11 dB
ac Coupled Band 0B (1.7 GHz to 2.0 GHz) (serial number US39440498 or greater)				
Maximum Response		(16)_____	0.5 dB	±0.11 dB
Minimum Response	–0.5 dB	(17)_____		±0.11 dB
Peak-to-Peak Response		(18)_____	1.0 dB	±0.11 dB
ac Coupled Band 1 (3.0 GHz to 6.7 GHz)				

ManualsPlus.com

Table 3-8 Agilent E4404B Performance Verification Test Record

Agilent Technologies

Model E4404B **Report No.** _____

Serial No. _____ **Date** _____

Test Description	Minimum	Results Measured	Maximum	Measurement Uncertainty
Maximum Response		(19)_____	1.5 dB	±0.39 dB
Minimum Response	–1.5 dB	(20)_____		±0.39 dB
Peak-to-Peak Response		(21)_____	2.6 dB	±0.39 dB
0 to 55° C				
Non-Option UKB dc Coupled Band 0 (9 kHz to 3.0 GHz)				
Maximum Response		(1)_____	0.76 dB	±0.19 dB
Minimum Response	–0.76 dB	(2)_____		±0.19 dB
Peak-to-Peak Response		(3)_____	1.52 dB	±0.19 dB
Option UKB dc Coupled Band 0 (100 Hz to 3.0 GHz)				
Maximum Response		(1)_____	1.0 dB	±0.19 dB
Minimum Response	–1.0 dB	(2)_____		±0.19 dB
Peak-to-Peak Response		(3)_____	2.0 dB	±0.19 dB
dc Coupled Band 1 (3.0 GHz to 6.7 GHz)				
Maximum Response		(4)_____	2.5 dB	±0.39 dB
Minimum Response	–2.5 dB	(5)_____		±0.39 dB
Peak-to-Peak Response		(6)_____	3.0 dB	±0.39 dB

ManualsPlus.com

Table 3-8 Agilent E4404B Performance Verification Test Record

Agilent Technologies

Model E4404B **Report No.** _____

Serial No. _____ **Date** _____

Test Description	Minimum	Results Measured	Maximum	Measurement Uncertainty
ac Coupled Band 0 (100 kHz to 3.0 GHz)				
Maximum Response		(10)_____	1.0 dB	±0.11 dB
Minimum Response	–1.0 dB	(11)_____		±0.11 dB
Peak-to-Peak Response		(12)_____	2.0 dB	±0.11 dB
ac Coupled Band 0A (800 MHz to 1.0 GHz) (serial number US39440498 or greater)				
Maximum Response		(13)_____	1.0 dB	±0.11 dB
Minimum Response	–1.0 dB	(14)_____		±0.11 dB
Peak-to-Peak Response		(15)_____	2.0 dB	±0.11 dB
ac Coupled Band 0B (1.7 GHz to 2.0 GHz) (serial number US39440498 or greater)				
Maximum Response		(16)_____	1.0 dB	±0.11 dB
Minimum Response	–1.0 dB	(17)_____		±0.11 dB
Peak-to-Peak Response		(18)_____	2.0 dB	±0.11 dB
ac Coupled Band 1 (3.0 GHz to 6.7 GHz)				
Maximum Response		(19)_____	2.5 dB	±0.39 dB
Minimum Response	–2.5 dB	(20)_____		±0.39 dB

ManualsPlus.com

Table 3-8 Agilent E4404B Performance Verification Test Record

Agilent Technologies					
Model E4404B			**Report No. _____**		
Serial No. _____			**Date _____**		
Test Description		**Minimum**	**Results Measured**	**Maximum**	**Measurement Uncertainty**
	Peak-to-Peak Response		(21)_____	3.0 dB	±0.39 dB
27.	**Frequency Response (Preamp On)** *(Option 1DS Only)*	Note: Enter data in the appropriate section below depending upon the ambient temperature at which the test was performed and installed options.			
	20 to 30° C				
	Band 0 (1 MHz to 3.0 GHz)				
	Maximum Response		(1)_____	1.5 dB	±0.28 dB
	Minimum Response	–1.5 dB	(2)_____		±0.28 dB
	Peak-to-Peak Response		(3)_____	3.0 dB	±0.28 dB
	Band 0A (800 MHz to 1.0 GHz) (serial number US39440498 or greater)				
	Maximum Response		(4)_____	1.5 dB	±0.28 dB
	Minimum Response	–1.5 dB	(5)_____		±0.28 dB
	Peak-to-Peak Response		(6)_____	3.0 dB	±0.28 dB
	Band 0B (1.7 GHz to 2.0 GHz) (serial number US39440498 or greater)				
	Maximum Response		(7)_____	1.5 dB	±0.28 dB
	Minimum Response	–1.5 dB	(8)_____		±0.28 dB
	Peak-to-Peak Response		(9)_____	3.0 dB	±0.28 dB

ManualsPlus.com

Table 3-8 Agilent E4404B Performance Verification Test Record

Agilent Technologies					
Model E4404B			**Report No. _____**		
Serial No. _____			**Date _____**		
Test Description		**Minimum**	**Results Measured**	**Maximum**	**Measurement Uncertainty**
	0 to 55° C				
	Band 0 (1 MHz to 3.0 GHz)				
	Maximum Response		(1)_____	2.0 dB	±0.28 dB
	Minimum Response	–2.0 dB	(2)_____		±0.28 dB
	Peak-to-Peak Response		(3)_____	4.0 dB	±0.28 dB
	Band 0A (800 MHz to 1.0 GHz) (serial number US39440498 or greater)				
	Maximum Response		(4)_____	2.0 dB	±0.28 dB
	Minimum Response	–2.0 dB	(5)_____		±0.28 dB
	Peak-to-Peak Response		(6)_____	4.0 dB	±0.28 dB
	Band 0B (1.7 GHz to 2.0 GHz) (serial number US39440498 or greater)				
	Maximum Response		(7)_____	2.0 dB	±0.28 dB
	Minimum Response	–2.0 dB	(8)_____		±0.28 dB
	Peak-to-Peak Response		(9)_____	4.0 dB	±0.28 dB
29.	**Other Input-Related Spurious Responses**				
	Center Freq Input Freq				
	2.0 GHz 2042.8 MHz		(1)_____	–65 dBc	±.891 dB
	2.0 GHz 2642.8 MHz		(2)_____	–65 dBc	±.891 dB
	2.0 GHz 1820.8 MHz		(3)_____	–65 dBc	±.891 dB
	2.0 GHz 278.5 MHz		(4)_____	–65 dBc	±.891 dB

ManualsPlus.com

Table 3-8 Agilent E4404B Performance Verification Test Record

Agilent Technologies

Model E4404B **Report No.** _____

Serial No. _____ **Date** _____

	Test Description	Minimum	Results Measured	Maximum	Measurement Uncertainty
	2.0 GHz 5600.0 MHz		(5)_____	–80 dBc	±.891 dB
	2.0 GHz 6242.8 MHz		(6)_____	–80 dBc	±.891 dB
	4.0 GHz 4042.8 MHz		(7)_____	–65 dBc	±.891 dB
	4.0 GHz 4642.8 MHz		(8)_____	–65 dBc	±.891 dB
	4.0 GHz 3742.9 MHz		(9)_____	–65 dBc	±.891 dB
	4.0 GHz 2242.8 MHz		(10)_____	–80 dBc	±.891 dB
32.	**Spurious Responses**				
	300 MHz TOI, 1 kHz RBW	12.5 dBm	(1)_____		±0.93 dB
	300 MHz TOI, 30 Hz RBW (*Option 1DR only*)	12.5 dBm	(2)_____		±0.93 dB
	5 GHz TOI	11 dBm	(3)_____		±0.93 dB
	300 MHz SHI	35 dBm	(5)_____		±0.41 dB
	900 MHz SHI	45 dBm	(6)_____		±0.41 dB
	1.55 GHz SHI	75 dBm	(7)_____		±0.41 dB
	3.1 GHz SHI	90 dBm	(8)_____		±0.41 dB
34.	**Gain Compression**				
	Test Frequency				
	53 MHz		(1)_____	1.0 dB	±0.123 dB
	50.004 MHz (*Option 1DR only*)		(2)_____	1.0 dB	±0.123 dB
	1403 MHz		(3)_____	1.0 dB	±0.123 dB
	2503 MHz		(4)_____	1.0 dB	±0.123 dB
	4403 MHz		(5)_____	1.0 dB	±0.123 dB
37.	**Displayed Average Noise Level**	Note: Enter results with preamp on in the appropriate section based upon the ambient temperature when the test was performed.			
	1 kHz RBW, Preamp Off				

ManualsPlus.com

Table 3-8 Agilent E4404B Performance Verification Test Record

Agilent Technologies					
Model E4404B			**Report No. _____**		
Serial No. _____			**Date _____**		
Test Description		**Minimum**	**Results Measured**	**Maximum**	**Measurement Uncertainty**
	10 MHz to 1 GHz		(1)_____	–116 dBm	±1.23 dB
	1 GHz to 2 GHz		(2)_____	–116 dBm	±1.23 dB
	2 GHz to 3 GHz		(3)_____	–112 dBm	±1.23 dB
	3 GHz to 6 GHz		(4)_____	–112 dBm	±1.23 dB
	6 GHz to 6.7 GHz		(5)_____	–111 dBm	±1.23 dB
	1kHz RBW, Preamp On, 0 to 55° C				
	10 MHz to 1 GHz		(6)_____	–131 dBm	±1.23 dB
	1 GHz to 2 GHz		(7)_____	–131 dBm	±1.23 dB
	2 GHz to 3 GHz		(8)_____	–127 dBm	±1.23 dB
	10 Hz RBW, Preamp Off				
	10 MHz to 1 GHz		(9)_____	–135 dBm	±1.23 dB
	1 GHz to 2 GHz		(10)_____	–135 dBm	±1.23 dB
	2 GHz to 3 GHz		(11)_____	–131 dBm	±1.23 dB
	3 GHz to 6 GHz		(12)_____	–131 dBm	±1.23 dB
	6 GHz to 6.7 GHz		(13)_____	–130 dBm	±1.23 dB
	10 Hz RBW, Preamp On, 0 to 55° C				
	10 MHz to 1 GHz		(14)_____	–150 dBm	±1.23 dB
	1 GHz to 2 GHz		(15)_____	–150 dBm	±1.23 dB
	2 GHz to 3 GHz		(16)_____	–146 dBm	±1.23 dB
	1 kHz RBW, Preamp On, 20 to 30° C				
	10 MHz to 1 GHz		(17)_____	–132 dBm	±1.23 dB
	1 GHz to 2 GHz		(18)_____	–132 dBm	±1.23 dB
	2 GHz to 3 GHz		(19)_____	–130 dBm	±1.23 dB

ManualsPlus.com

Table 3-8 Agilent E4404B Performance Verification Test Record

Agilent Technologies					
Model E4404B			**Report No. _____**		
Serial No. _____			**Date _____**		
Test Description		**Minimum**	**Results Measured**	**Maximum**	**Measurement Uncertainty**
	10 Hz RBW, Preamp On, 20 to 30° C				
	10 MHz to 1 GHz		(20)_____	–151 dBm	±1.23 dB
	1 GHz to 2 GHz		(21)_____	–151 dBm	±1.23 dB
	2 GHz to 3 GHz		(22)_____	–149 dBm	±1.23 dB
39.	**Residual Responses**				
	150 kHz to 6.7 GHz		(1)_____	–90 dBm	±0.87 dB
40.	**Fast Time Domain Amplitude Accuracy** *(Option AYX only)*				
	Amplitude Error	–0.3%	(1)_____	0.3%	±0.029%
42.	**Tracking Generator Absolute Amplitude and Vernier Accuracy** *Option 1DN only)*				
	Absolute Amplitude Accuracy	–0.75 dB	(1)_____	0.75 dB	±0.096 dB
	Absolute Vernier Accuracy				
	–2 dB	–0.5 dB	(2)_____	0.5 dB	±0.008 dB
	–3 dB	–0.5 dB	(3)_____	0.5 dB	±0.008 dB
	–5 dB	–0.5 dB	(4)_____	0.5 dB	±0.008 dB
	–6 dB	–0.5 dB	(5)_____	0.5 dB	±0.008 dB
	–7 dB	–0.5 dB	(6)_____	0.5 dB	±0.008 dB
	–8 dB	–0.5 dB	(7)_____	0.5 dB	±0.008 dB
	–9 dB	–0.5 dB	(8)_____	0.5 dB	±0.008 dB
	–10 dB	–0.5 dB	(9)_____	0.5 dB	±0.008 dB
	Incremental Vernier Accuracy				

ManualsPlus.com

Table 3-8 Agilent E4404B Performance Verification Test Record

Agilent Technologies

Model E4404B **Report No.** _____

Serial No. _____ **Date** _____

Test Description		Minimum	Results Measured	Maximum	Measurement Uncertainty
	–2 dB	–0.2 dB	(10)_____	0.2 dB	±0.008 dB
	–3 dB	–0.2 dB	(11)_____	0.2 dB	±0.008 dB
	–5 dB	–0.2 dB	(12)_____	0.2 dB	±0.008 dB
	–6 dB	–0.2 dB	(13)_____	0.2 dB	±0.008 dB
	–7 dB	–0.2 dB	(14)_____	0.2 dB	±0.008 dB
	–8 dB	–0.2 dB	(15)_____	0.2 dB	±0.008 dB
	–9 dB	–0.2 dB	(16)_____	0.2 dB	±0.008 dB
	–10 dB	–0.2 dB	(17)_____	0.2 dB	±0.008 dB
44.	**Tracking Generator Level Flatness** *Option 1DN only)*				
	Positive Level Flatness, <1 MHz		(1)_____	3.0 dB	±0.284 dB
	Negative Level Flatness, <1 MHz	–3.0 dB	(2)_____		±0.284 dB
	Positive Level Flatness, 1 MHz to 10 MHz		(3)_____	3.0 dB	±0.142 dB
	Negative Level Flatness, 1 MHz to 10 MHz	–3.0 dB	(4)_____		±0.142 dB
	Positive Level Flatness, >10 MHz to 1.5 GHz		(5)_____	2.0 dB	±0.142 dB
	Negative Level Flatness, >10 MHz to 1.5 GHz	–2.0 dB	(6)_____		±0.142 dB
	Positive Level Flatness, >1.5 GHz		(7)_____	2.0 dB	±0.142 dB
	Negative Level Flatness, >1.5 GHz	–2.0 dB	(8)_____		±0.142 dB

ManualsPlus.com

Table 3-8 Agilent E4404B Performance Verification Test Record

Agilent Technologies

Model E4404B **Report No.** _____

Serial No. _____ **Date** _____

Test Description		Minimum	Results Measured	Maximum	Measurement Uncertainty
46.	**Tracking Generator Harmonic Spurious Outputs** *(Option 1DN only)*				
	2nd Harmonic, <20 kHz		(1)_____	–15 dBc	±2.6 dB
	2nd Harmonic, ≥ 20 kHz		(2)_____	–25 dBc	±2.6 dB
	3rd Harmonic, <20 kHz		(3)_____	–15 dBc	±2.6 dB
	3rd Harmonic, ≥ 20 kHz		(4)_____	–25 dBc	±2.6 dB
48.	**Tracking Generator Non-Harmonic Spurious Outputs** *(Option 1DN only)*				
	Highest Non-Harmonic Spurious Output Amplitude, 9 kHz to 2 GHz		(1)_____	–27 dBc	±2.63 dB
	Highest Non-Harmonic Spurious Output Amplitude, 2 GHz to 3 GHz		(2)_____	–23 dBc	±3.14 dB
49.	**Tracking Generator L.O. Feedthrough** *(Option 1DN only)*				
	9 kHz to 2.9 GHz		(1)_____	–16 dBm	±2.58 dB
	2.9 GHz to 3.0 GHz		(2)_____	–16 dBm	±3.03 dB
50.	**Gate Delay Accuracy and Gate Length Accuracy** *(Option 1D6 only)*				
	Minimum Gate Delay	499.9 ns	(1)_____	1.5001 µs	±549 ps
	Maximum Gate Delay	499.9 ns	(2)_____	1.5001 µs	±549 ps
	1 µs Gate Length	499.9 ns	(3)_____	1.5001 µs	±520 ps

ManualsPlus.com

Table 3-8 Agilent E4404B Performance Verification Test Record

Agilent Technologies					
Model E4404B			**Report No. _____**		
Serial No. _____			**Date _____**		
Test Description		**Minimum**	**Results Measured**	**Maximum**	**Measurement Uncertainty**
	65 ms Gate Length	64.993 ms	(4)_____	65.007 ms	±647 ns
51.	**Gate Mode Additional Amplitude Error** *(Option 1D6 only)*				
	Amplitude Error	–0.2 dB	(1)_____	0.2 dB	±0.023 dB
58.	**GSM Phase and Frequency Error** *(Option BAH and B7E)*				
	Peak Phase Error	–2.1 Deg	(1)_____	2.1 Deg	0.52 Deg
	RMS Phase Error	–1.1 Deg	(2)_____	1.1 Deg	0.000063 Deg
	Frequency Error	–10 Hz	(3)_____	10 Hz	±0.006 Hz
59.	**Comms Absolute Power Accuracy** *(Options BAC or BAH)*				
	20 to 30° C				
	cdmaOne Channel Power Accuracy *(Option BAC only)*				
	Cellular Band Input Amplitude				
	15 dBm	–0.82 dB	(1)_____	0.82 dB	±0.173 dB
	–5 dBm	–0.82 dB	(2)_____	0.82 dB	±0.161 dB
	–25 dBm	–0.78 dB	(3)_____	0.78 dB	±0.161 dB
	–45 dBm	–0.69 dB	(4)_____	0.69 dB	±0.152 dB
	–55 dBm	–0.77 dB	(5)_____	0.77 dB	±0.152 dB
	–70 dBm	–0.89 dB	(6)_____	0.89 dB	±0.161 dB
	PCS Band Input Amplitude				
	15 dBm	–0.78 dB	(7)_____	0.78 dB	±0.173 dB
	–5 dBm	–0.78 dB	(8)_____	0.78 dB	±0.161 dB

ManualsPlus.com

Table 3-8 Agilent E4404B Performance Verification Test Record

Agilent Technologies

Model E4404B **Report No.** _____

Serial No. _____ **Date** _____

Test Description	Minimum	Results Measured	Maximum	Measurement Uncertainty
–25 dBm	–0.74 dB	(9)_____	0.74 dB	±0.161 dB
–45 dBm	–0.71 dB	(10)_____	0.71 dB	±0.152 dB
–55 dBm	–0.79 dB	(11)_____	0.79 dB	±0.152 dB
–70 dBm	–0.91 dB	(12)_____	0.91 dB	±0.161 dB
GSM Transmit Power Accuracy *(Option BAH only)*				
GSM Band Input Amplitude				
15 dBm	–0.81 dB	(13)_____	0.81 dB	±0.173 dB
–20 dBm	–0.81 dB	(14)_____	0.81 dB	±0.161 dB
–30 dBm	–0.74 dB	(15)_____	0.74 dB	±0.156 dB
–40 dBm	–0.79 dB	(16)_____	0.79 dB	±0.161 dB
–50 dBm	–0.95 dB	(17)_____	0.95 dB	±0.152 dB
–60 dBm	–1.09 dB	(18)_____	1.09 dB	±0.161 dB
DCS and PCS Bands Input Amplitude				
15 dBm	–0.77 dB	(19)_____	0.77 dB	±0.173 dB
–20 dBm	–0.77 dB	(20)_____	0.77 dB	±0.161 dB
–30 dBm	–0.70 dB	(21)_____	0.70 dB	±0.156 dB
–40 dBm	–0.75 dB	(22)_____	0.75 dB	±0.161 dB
–50 dBm	–0.91 dB	(23)_____	0.91 dB	±0.152 dB
–60 dBm	–1.05 dB	(24)_____	1.05 dB	±0.161 dB
cdmaOne Receive Channel Power, Preamp Off *(Option BAC only)*				
Cellular Band Input Amplitude				

ManualsPlus.com

Table 3-8 Agilent E4404B Performance Verification Test Record

Agilent Technologies

Model E4404B **Report No.** _____

Serial No. _____ **Date** _____

Test Description	Minimum	Results Measured	Maximum	Measurement Uncertainty
–40 dBm	–1.46 dB	(25)_____	1.46 dB	±0.161 dB
–60 dBm	–1.46 dB	(26)_____	1.46 dB	±0.161 dB
–70 dBm	–1.46 dB	(27)_____	1.46 dB	±0.161 dB
–80 dBm	–1.46 dB	(28)_____	1.46 dB	±0.161 dB
–85 dBm	–1.46 dB	(29)_____	1.46 dB	±0.152 dB
PCS Band Input Amplitude				
–40 dBm	–1.35 dB	(30)_____	1.35 dB	±0.161 dB
–60 dBm	–1.35 dB	(31)_____	1.35 dB	±0.161 dB
–70 dBm	–1.35 dB	(32)_____	1.35 dB	±0.161 dB
–80 dBm	–1.35 dB	(33)_____	1.35 dB	±0.161 dB
–85 dBm	–1.35 dB	(34)_____	1.35 dB	±0.152 dB
cdmaOne Receive Channel Power, Preamp On *(Option BAC only)*				
Cellular Band Input Amplitude				
–40 dBm	–1.88 dB	(35)_____	1.88 dB	±0.161 dB
–60 dBm	–1.88 dB	(36)_____	1.88 dB	±0.161 dB
–70 dBm	–1.88 dB	(37)_____	1.88 dB	±0.161 dB
–80 dBm	–1.88 dB	(38)_____	1.88 dB	±0.161 dB
–90 dBm	–2.95 dB	(39)_____	2.95 dB	±0.161 dB
–100 dBm	–2.95 dB	(40)_____	2.95 dB	±0.161 dB
PCS Band Input Amplitude				
–40 dBm	–1.88 dB	(41)_____	1.88 dB	±0.161 dB
–60 dBm	–1.88 dB	(42)_____	1.88 dB	±0.161 dB

ManualsPlus.com

Table 3-8 Agilent E4404B Performance Verification Test Record

Agilent Technologies					
Model E4404B			**Report No. _____**		
Serial No. _____			**Date _____**		
Test Description		**Minimum**	**Results Measured**	**Maximum**	**Measurement Uncertainty**
	–70 dBm	–1.88 dB	(43)_____	1.88 dB	±0.161 dB
	–80 dBm	–1.88 dB	(44)_____	1.88 dB	±0.161 dB
	–90 dBm	–2.95 dB	(45)_____	2.95 dB	±0.161 dB
	–100 dBm	–2.95 dB	(46)_____	2.95 dB	±0.161 dB

ManualsPlus.com

Agilent E4405B Performance Verification Test Record

Tests for the Agilent E4405B only are included in this test record, therefore not all test numbers are included.

Table 3-9 Agilent E4405B Performance Verification Test Record

Agilent Technologies

Address: _____ Report No. _____

_____ Date _____

_____

Model E4405B

Serial No. _____ Ambient temperature _____° C

Options _____ Relative humidity_____%

Firmware Revision _____ Power mains line frequency _____ Hz (nominal)

Customer _____ Tested by _____

Test Equipment Used:

Description	Model No.	Trace No.	Cal Due Date
Synthesized Signal Generator	_____	_____	_____
Wide Offset Phase Noise Signal Generator	_____	_____	_____
Synthesized Sweeper #1	_____	_____	_____
Synthesized Sweeper #2	_____	_____	_____
Function Generator	_____	_____	_____
Power Meter, Dual-Channel	_____	_____	_____
RF Power Sensor #1	_____	_____	_____
RF Power Sensor #2	_____	_____	_____
Microwave Power Sensor	_____	_____	_____
Low-Power Power Sensor	_____	_____	_____
Digital Multimeter	_____	_____	_____
Universal Counter	_____	_____	_____
Frequency Standard	_____	_____	_____

ManualsPlus.com

Table 3-9 Agilent E4405B Performance Verification Test Record

Power Splitter	_____	_____	_____
50 Ω Termination	_____	_____	_____
1 dB Step Attenuator	_____	_____	_____
10 dB Step Attenuator	_____	_____	_____
Oscilloscope *(Option 1D6 only)*	_____	_____	_____
Microwave Spectrum Analyzer *(Option 1DN only)*	_____	_____	_____
Notes/comments:	_____		
	_____		

Table 3-10 Agilent E4405B Performance Verification Test Record

Agilent Technologies

Model E4405B **Report No.** _____

Serial No. _____ **Date** _____

Test Description		**Minimum**	**Results Measured**	**Maximum**	**Measurement Uncertainty**
1.	**10 MHz Reference Output Accuracy** (*Non-Option 1D5 only*)				
	Settability	–5.0 Hz	(1)_____	5.0 Hz	±293.3 µHz
2.	**10 MHz High-Stability Frequency Reference Accuracy** (*Option 1D5 only*)				
	5 Minute Warm-Up Error	–0.1 ppm	(1)_____	0.1 ppm	±0.000072 ppm
	15 Minute Warm-Up Error	–0.01 ppm	(2)_____	0.01 ppm	±0.000070 ppm
4.	**Frequency Readout and Marker Frequency Count Accuracy**	Note: Test Record Entries 10 through 15 do not apply to the Agilent E4405B.			
	Frequency Readout Accuracy				
	Center Freq / Span				
	1500 MHz / 20 MHz	1499.83 MHz	(1)_____	1500.17 MHz	±0 Hz
	1500 MHz / 10 MHz	1499.91 MHz	(2)_____	1500.09 MHz	±0 Hz

ManualsPlus.com

Table 3-10 Agilent E4405B Performance Verification Test Record

Agilent Technologies

Model E4405B **Report No.** _____

Serial No. _____ **Date** _____

Test Description		Minimum	Results Measured	Maximum	Measurement Uncertainty
1500 MHz	1 MHz	1499.991 MHz	(3)_____	1500.009 MHz	±0 Hz
4000 MHz	20 MHz	3999.83 MHz	(4)_____	4000.17 MHz	±0 Hz
4000 MHz	10 MHz	3999.91 MHz	(5)_____	4000.09 MHz	±0 Hz
4000 MHz	1 MHz	3999.991 MHz	(6)_____	4000.009 MHz	±0 Hz
9000 MHz	20 MHz	8999.83 MHz	(7)_____	9000.17 MHz	±0 Hz
9000 MHz	10 MHz	8999.91 MHz	(8)_____	9000.09 MHz	±0 Hz
9000 MHz	1 MHz	8999.991 MHz	(9)_____	9000.009 MHz	±0 Hz
Marker Count Accuracy		Note: Enter results in the appropriate section below based upon the firmware revision of the analyzer.			
Firmware Revision Prior to A.03.00					
Center Freq	Span				
1500 MHz	20 MHz	1499.999998 MHz	(16)_____	1500.000002 MHz	±0 Hz
1500 MHz	1 MHz	1499.999998 MHz	(17)_____	1500.000002 MHz	±0 Hz
4000 MHz	20 MHz	3999.999998 MHz	(18)_____	4000.000002 MHz	±0 Hz
4000 MHz	1 MHz	3999.999998 MHz	(19)_____	4000.000002 MHz	±0 Hz
9000 MHz	20 MHz	8999.999997 MHz	(20)_____	9000.000003 MHz	±0 Hz
9000 MHz	1 MHz	8999.999997 MHz	(21)_____	9000.000003 MHz	±0 Hz
Marker Count Accuracy					
Firmware Revision A.03.00 or later					

ManualsPlus.com

Table 3-10 Agilent E4405B Performance Verification Test Record

Agilent Technologies

Model E4405B **Report No.** _____

Serial No. _____ **Date** _____

Test Description		Minimum	Results Measured	Maximum	Measurement Uncertainty
	Center Freq Span				
	1500 MHz 20 MHz	1499.999999 MHz	(16)_____	1500.000001 MHz	±0 Hz
	1500 MHz 1 MHz	1499.999999 MHz	(17)_____	1500.000001 MHz	±0 Hz
	4000 MHz 20 MHz	3999.999999 MHz	(18)_____	4000.000001 MHz	±0 Hz
	4000 MHz 1 MHz	3999.999999 MHz	(19)_____	4000.000001 MHz	±0 Hz
	9000 MHz 20 MHz	8999.999999 MHz	(20)_____	9000.000001 MHz	±0 Hz
	9000 MHz 1 MHz	8999.999999 MHz	(21)_____	9000.000001 MHz	±0 Hz
6.	**Frequency Span Accuracy**				
	Span Start Freq				
	3000 MHz 0 Hz	2370 MHz	(1)_____	2430 MHz	±6.12 MHz
	100 MHz 10 MHz	79 MHz	(2)_____	81 MHz	±204 kHz
	100 kHz 10 MHz	79 kHz	(3)_____	81 kHz	±204 Hz
	100 MHz 800 MHz	79 MHz	(4)_____	81 MHz	±204 kHz
	100 kHz 800 MHz	79 kHz	(5)_____	81 kHz	±204 Hz
	100 MHz 1400 MHz	79 MHz	(6)_____	81 MHz	±204 kHz
	100 kHz 1499 MHz	79 kHz	(7)_____	81 kHz	±204 Hz
7.	**Noise Sidebands**				
	Offset from 1 GHz signal				
	(Serial Prefix < US4510, SG4510 or MY4510)				
	10 kHz		(1)_____	–90 dBc/Hz	±2.44 dB

ManualsPlus.com

Table 3-10 Agilent E4405B Performance Verification Test Record

Agilent Technologies					
Model E4405B			**Report No. _____**		
Serial No. _____			**Date _____**		
Test Description		**Minimum**	**Results Measured**	**Maximum**	**Measurement Uncertainty**
	20 kHz		(2)_____	–100 dBc/Hz	±2.44 dB
	30 kHz		(3)_____	–106 dBc/Hz	±2.44 dB
	(Serial Prefix ≥ US4510, SG4510 or MY4510, Option 1DR)				
	10 kHz		(1)_____	–98 dBc/Hz	±2.44 dB
	20 kHz		(2)_____	–104 dBc/Hz	±2.44 dB
	30 kHz		(3)_____	–110 dBc/Hz	±2.44 dB
	(Serial Prefix ≥ US4510, SG4510 or MY4510, Non-Option 1DR)				
	10 kHz		(1)_____	–90 dBc/Hz	±2.44 dB
	20 kHz		(2)_____	–104 dBc/Hz	±2.44 dB
	30 kHz		(3)_____	–110 dBc/Hz	±2.44 dB
8.	**Noise Sidebands - Wide Offsets**	Note: Enter data in the appropriate section below depending upon whether or not Option 120 (ACPR Dynamic Range Extension) is installed.			
	Non-Option 120				
	Offset from 1 GHz signal				
	100 kHz		(1)_____	–118 dBc/Hz	±2.44 dB
	1 MHz		(2)_____	–125 dBc/Hz	±2.44 dB
	5 MHz		(3)_____	–127 dBc/Hz	±2.44 dB
	10 MHz		(4)_____	–131 dBc/Hz	±2.44 dB
	Option 120				
	Offset from 1 GHz signal				
	100 kHz		(1)_____	–118 dBc/Hz	±2.44 dB
	1 MHz		(2)_____	–133 dBc/Hz	±2.44 dB
	5 MHz		(3)_____	–135 dBc/Hz	±2.44 dB

ManualsPlus.com

Table 3-10 Agilent E4405B Performance Verification Test Record

Agilent Technologies					
Model E4405B			**Report No. _____**		
Serial No. _____			**Date _____**		
Test Description		**Minimum**	**Results Measured**	**Maximum**	**Measurement Uncertainty**
	10 MHz		(4)_____	–137 dBc/Hz	±2.44 dB
9.	**System-Related Sidebands**				
	Offset from 500 MHz signal				
	30 kHz to 230 kHz		(1)_____	–65 dBc	±1.30 dB
	–30 kHz to –230 kHz		(2)_____	–65 dBc	±1.30 dB
10.	**Residual FM**				
	1 kHz Res BW (*Non-Option 1D5)*		(1)_____	150 Hz	±21 Hz
	1 kHz Res BW (*Option 1D5)*		(1)_____	100 Hz	±21 Hz
	10 Hz Res BW (*Options 1DR and 1D5 only*)		(2)_____	2 Hz	±0.27 Hz
11.	**Sweep Time Accuracy**				
	Sweep Time				
	5 ms	–1.0%	(1)_____	1.0%	±0.16%
	20 ms	–1.0%	(2)_____	1.0%	±0.16%
	100 ms	–1.0%	(3)_____	1.0%	±0.16%
	1 s	–1.0%	(4)_____	1.0%	±0.16%
	10 s	–1.0%	(5)_____	1.0%	±0.16%
	1 ms (*Option AYX or B7D only)*	–1.0%	(6)_____	1.0%	±0.16%
	500 µs (*Option AYX or B7D only)*	–1.0%	(7)_____	1.0%	±0.16%
	100 µs (*Option AYX or B7D only)*	–1.0%	(8)_____	1.0%	±0.16%
12.	**Display Scale Fidelity**				

ManualsPlus.com

Table 3-10 Agilent E4405B Performance Verification Test Record

Agilent Technologies

Model E4405B **Report No.** _____

Serial No. _____ **Date** _____

Test Description		Minimum	Results Measured	Maximum	Measurement Uncertainty
	Cumulative Log Fidelity, Res BW ≥1 kHz				
	dB from Ref Level				
	–4	–0.30 dB	(1)_____	0.30 dB	±0.082 dB
	–8	–0.30 dB	(2)_____	0.30 dB	±0.078 dB
	–12	–0.40 dB	(3)_____	0.40 dB	±0.075 dB
	–16	–0.40 dB	(4)_____	0.40 dB	±0.073 dB
	–20	–0.40 dB	(5)_____	0.40 dB	±0.078 dB
	–24	–0.50 dB	(6)_____	0.50 dB	±0.074 dB
	–28	–0.50 dB	(7)_____	0.50 dB	±0.073 dB
	–32	–0.60 dB	(8)_____	0.60 dB	±0.077 dB
	–36	–0.60 dB	(9)_____	0.60 dB	±0.075 dB
	–40	–0.60 dB	(10)_____	0.60 dB	±0.081 dB
	–44	–0.70 dB	(11)_____	0.70 dB	±0.077 dB
	–48	–0.70 dB	(12)_____	0.70 dB	±0.076 dB
	–52	–0.70dB	(13)_____	0.70 dB	±0.080 dB
	–56	–0.70 dB	(14)_____	0.70 dB	±0.078 dB
	–60	–0.70 dB	(15)_____	0.70 dB	±0.084 dB
	–64	–0.80 dB	(16)_____	0.80 dB	±0.081 dB
	–68	–0.80 dB	(17)_____	0.80 dB	±0.080 dB
	–72	–0.80 dB	(18)_____	0.80 dB	±0.084 dB
	–76	–0.80 dB	(19)_____	0.80 dB	±0.083 dB
	–80	–0.80 dB	(20)_____	0.80 dB	±0.089 dB
	–84	–1.15 dB	(21)_____	1.15 dB	±0.086 dB

ManualsPlus.com

Table 3-10 Agilent E4405B Performance Verification Test Record

Agilent Technologies

Model E4405B **Report No.** _____

Serial No. _____ **Date** _____

Test Description	Minimum	Results Measured	Maximum	Measurement Uncertainty
Incremental Log Fidelity, Res BW ≥1 kHz				
dB from Ref Level				
–4	–0.4 dB	(22)_____	0.4 dB	±0.082 dB
–8	–0.4 dB	(23)_____	0.4 dB	±0.078 dB
–12	–0.4 dB	(24)_____	0.4 dB	±0.075 dB
–16	–0.4 dB	(25)_____	0.4 dB	±0.073 dB
–20	–0.4 dB	(26)_____	0.4 dB	±0.078 dB
–24	–0.4 dB	(27)_____	0.4 dB	±0.074 dB
–28	–0.4 dB	(28)_____	0.4 dB	±0.073 dB
–32	–0.4 dB	(29)_____	0.4 dB	±0.077 dB
–36	–0.4 dB	(30)_____	0.4 dB	±0.075 dB
–40	–0.4 dB	(31)_____	0.4 dB	±0.081 dB
–44	–0.4 dB	(32)_____	0.4 dB	±0.077 dB
–48	–0.4 dB	(33)_____	0.4 dB	±0.076 dB
–52	–0.4 dB	(34)_____	0.4 dB	±0.080 dB
–56	–0.4 dB	(35)_____	0.4 dB	±0.078 dB
–60	–0.4 dB	(36)_____	0.4 dB	±0.084 dB
–64	–0.4 dB	(37)_____	0.4 dB	±0.081 dB
–68	–0.4 dB	(38)_____	0.4 dB	±0.080 dB
–72	–0.4 dB	(39)_____	0.4 dB	±0.084 dB
–76	–0.4 dB	(40)_____	0.4 dB	±0.083 dB
–80	–0.4 dB	(41)_____	0.4 dB	±0.089 dB
Cumulative Log Fidelity, Res BW ≤300 Hz *(Option 1DR only)*				
dB from Ref Level				

ManualsPlus.com

Table 3-10 Agilent E4405B Performance Verification Test Record

Agilent Technologies

Model E4405B **Report No.** _____

Serial No. _____ **Date** _____

Test Description		Minimum	Results Measured	Maximum	Measurement Uncertainty
	–4	–0.34 dB	(43)_____	0.34 dB	±0.082 dB
	–8	–0.38 dB	(44)_____	0.38 dB	±0.078 dB
	–12	–0.42 dB	(45)_____	0.42 dB	±0.075 dB
	–16	–0.46 dB	(46)_____	0.46 dB	±0.073 dB
	–20	–0.50 dB	(47)_____	0.50 dB	±0.078 dB
	–24	–0.54 dB	(48)_____	0.54 dB	±0.074 dB
	–28	–0.58 dB	(49)_____	0.58 dB	±0.073 dB
	–32	–0.62 dB	(50)_____	0.62 dB	±0.077 dB
	–36	–0.66 dB	(51)_____	0.66 dB	±0.075 dB
	–40	–0.70 dB	(52)_____	0.70 dB	±0.081 dB
	–44	–0.74 dB	(53)_____	0.74 dB	±0.077 dB
	–48	–0.78 dB	(54)_____	0.78 dB	±0.076 dB
	–52	–0.82 dB	(55)_____	0.82 dB	±0.080 dB
	–56	–0.86 dB	(56)_____	0.86 dB	±0.078 dB
	–60	–0.90 dB	(57)_____	0.90 dB	±0.084 dB
	–64	–0.94 dB	(58)_____	0.94 dB	±0.081 dB
	–68	–0.98 dB	(59)_____	0.98 dB	±0.080 dB
	–72	–1.02 dB	(60)_____	1.02 dB	±0.084 dB
	–76	–1.06 dB	(61)_____	1.06 dB	±0.083 dB
	–80	–1.10 dB	(62)_____	1.10 dB	±0.089 dB
	–84	–1.14 dB	(63)_____	1.14 dB	±0.086 dB
	–88	–1.18 dB	(64)_____	1.18 dB	±0.085 dB
	–92	–1.22 dB	(65)_____	1.22 dB	±0.100 dB
	–96	–1.26 dB	(66)_____	1.26 dB	±0.099 dB
	–98	–1.28 dB	(67)_____	1.28 dB	±0.098 dB

ManualsPlus.com

Table 3-10 Agilent E4405B Performance Verification Test Record

Agilent Technologies

Model E4405B **Report No.** _____

Serial No. _____ **Date** _____

Test Description	Minimum	Results Measured	Maximum	Measurement Uncertainty
Incremental Log Fidelity, Res BW ≤300 Hz *(Option 1DR only)*				
dB from Ref Level				
–4	–0.4 dB	(68)_____	0.4 dB	±0.082 dB
–8	–0.4 dB	(69)_____	0.4 dB	±0.078 dB
–12	–0.4 dB	(70)_____	0.4 dB	±0.075 dB
–16	–0.4 dB	(71)_____	0.4 dB	±0.073 dB
–20	–0.4 dB	(72)_____	0.4 dB	±0.078 dB
–24	–0.4 dB	(73)_____	0.4 dB	±0.074 dB
–28	–0.4 dB	(74)_____	0.4 dB	±0.073 dB
–32	–0.4 dB	(75)_____	0.4 dB	±0.077 dB
–36	–0.4 dB	(76)_____	0.4 dB	±0.075 dB
–40	–0.4 dB	(77)_____	0.4 dB	±0.081 dB
–44	–0.4 dB	(78)_____	0.4 dB	±0.077 dB
–48	–0.4 dB	(79)_____	0.4 dB	±0.076 dB
–52	–0.4 dB	(80)_____	0.4 dB	±0.080 dB
–56	–0.4 dB	(81)_____	0.4 dB	±0.078 dB
–60	–0.4 dB	(82)_____	0.4 dB	±0.084 dB
–64	–0.4 dB	(83)_____	0.4 dB	±0.081 dB
–68	–0.4 dB	(84)_____	0.4 dB	±0.080 dB
–72	–0.4 dB	(85)_____	0.4 dB	±0.084 dB
–76	–0.4 dB	(86)_____	0.4 dB	±0.083 dB
–80	–0.4 dB	(87)_____	0.4 dB	±0.089 dB
Linear Fidelity, Res BW ≥1 kHz				
dB from Ref Level				

ManualsPlus.com

Table 3-10 Agilent E4405B Performance Verification Test Record

Agilent Technologies					
Model E4405B			**Report No. _____**		
Serial No. _____			**Date _____**		
Test Description		**Minimum**	**Results Measured**	**Maximum**	**Measurement Uncertainty**
	–4	–2.0%	(93)_____	2.0%	±0.064%
	–8	–2.0%	(94)_____	2.0%	±0.064%
	–12	–2.0%	(95)_____	2.0%	±0.064%
	–16	–2.0%	(96)_____	2.0%	±0.064%
	–20	–2.0%	(97)_____	2.0%	±0.063%
	Linear Fidelity, Res BW ≤300 Hz *(Option 1DR only)*				
	dB from Ref Level				
	–4	–2.0%	(98)_____	2.0%	±0.064%
	–8	–2.0%	(99)_____	2.0%	±0.064%
	–12	–2.0%	(100)_____	2.0%	±0.064%
	–16	–2.0%	(101)_____	2.0%	±0.064%
	–20	–2.0%	(102)_____	2.0%	±0.063%
	Zero Span, Res BW ≤300 Hz *(Option 1DR only)*				
	dB from Ref Level				
	–4	–0.36 dB	(103)_____	0.36 dB	±0.082 dB
	–8	–0.42 dB	(104)_____	0.42 dB	±0.078 dB
	–12	–0.48 dB	(105)_____	0.48 dB	±0.075 dB
	–16	–0.54 dB	(106)_____	0.54 dB	±0.073 dB
	–20	–0.60 dB	(107)_____	0.60 dB	±0.078 dB
	–24	–0.66 dB	(108)_____	0.66 dB	±0.074 dB
	–28	–0.72 dB	(109)_____	0.72 dB	±0.073 dB
	–32	–0.78 dB	(110)_____	0.78 dB	±0.077 dB
	–36	–0.84 dB	(111)_____	0.84 dB	±0.075 dB

ManualsPlus.com

Table 3-10 Agilent E4405B Performance Verification Test Record

Agilent Technologies

Model E4405B **Report No.** _____

Serial No. _____ **Date** _____

Test Description		Minimum	Results Measured	Maximum	Measurement Uncertainty
	–40	–0.90 dB	(112)_____	0.90 dB	±0.081 dB
	–44	–0.96 dB	(113)_____	0.96 dB	±0.077 dB
	–48	–1.02 dB	(114)_____	1.02 dB	±0.076 dB
	–52	–1.08 dB	(115)_____	1.08 dB	±0.080 dB
	–56	–1.14 dB	(116)_____	1.14 dB	±0.078 dB
	–60	–1.20 dB	(117)_____	1.20 dB	±0.084 dB
	–64	–1.5 dB	(118)_____	1.5 dB	±0.081 dB
	–68	–1.5 dB	(119)_____	1.5 dB	±0.080 dB
	–70	–1.5 dB	(120)_____	1.5 dB	±0.084 dB
13.	**Input Attenuation Switching Uncertainty**				
	Input Attenuation Setting				
	0 dB	–0.3 dB	(1)_____	0.3 dB	±0.101 dB
	5 dB	–0.3 dB	(2)_____	0.3 dB	±0.104 dB
	15 dB	–0.3 dB	(3)_____	0.3 dB	±0.102 dB
	20 dB	–0.3 dB	(4)_____	0.3 dB	±0.098 dB
	25 dB	–0.35 dB	(5)_____	0.35 dB	±0.098 dB
	30 dB	–0.40 dB	(6)_____	0.40 dB	±0.096 dB
	35 dB	–0.45 dB	(7)_____	0.45 dB	±0.099 dB
	40 dB	–0.50 dB	(8)_____	0.50 dB	±0.096 dB
	45 dB	–0.55 dB	(9)_____	0.55 dB	±0.099 dB
	50 dB	–0.60 dB	(10)_____	0.60 dB	±0.095 dB
	55 dB	–0.65 dB	(11)_____	0.65 dB	±0.099 dB
	60 dB	–0.70 dB	(12)_____	0.70 dB	±0.100 dB
	65 dB	–0.75 dB	(13)_____	0.75 dB	±0.111 dB

ManualsPlus.com

Table 3-10 Agilent E4405B Performance Verification Test Record

Agilent Technologies					
Model E4405B			**Report No. _____**		
Serial No. _____			**Date _____**		
Test Description		**Minimum**	**Results Measured**	**Maximum**	**Measurement Uncertainty**
15.	**Reference Level Accuracy**				
	Log, Res BW ≥1 kHz				
	Reference Level				
	–10 dBm	–0.3 dB	(1)_____	0.3 dB	±0.091 dB
	0 dBm	–0.3 dB	(2)_____	0.3 dB	±0.100 dB
	–30 dBm	–0.3 dB	(3)_____	0.3 dB	±0.092 dB
	–40 dBm	–0.3 dB	(4)_____	0.3 dB	±0.094 dB
	–50 dBm	–0.5 dB	(5)_____	0.5 dB	±0.095 dB
	–60 dBm	–0.5 dB	(6)_____	0.5 dB	±0.097 dB
	–70 dBm	–0.5 dB	(7)_____	0.5 dB	±0.099 dB
	–80 dBm	–0.7 dB	(8)_____	0.7 dB	±0.101 dB
	Linear, Res BW ≥1 kHz				
	Reference Level				
	–10 dBm	–0.3 dB	(9)_____	0.3 dB	±0.091 dB
	0 dBm	–0.3 dB	(10)_____	0.3 dB	±0.100 dB
	–30 dBm	–0.3 dB	(11)_____	0.3 dB	±0.092 dB
	–40 dBm	–0.3 dB	(12)_____	0.3 dB	±0.094 dB
	–50 dBm	–0.5 dB	(13)_____	0.5 dB	±0.095 dB
	–60 dBm	–0.5 dB	(14)_____	0.5 dB	±0.097 dB
	–70 dBm	–0.5 dB	(15)_____	0.5 dB	±0.099 dB
	–80 dBm	–0.7 dB	(16)_____	0.7 dB	±0.101 dB
	Log, Res BW ≤300 Hz *(Option 1DR only)*				
	Reference Level				
	–10 dBm	–0.3 dB	(17)_____	0.3 dB	±0.091 dB

ManualsPlus.com

Table 3-10 Agilent E4405B Performance Verification Test Record

Agilent Technologies

Model E4405B **Report No.** _____

Serial No. _____ **Date** _____

Test Description		Minimum	Results Measured	Maximum	Measurement Uncertainty
	0 dBm	–0.3 dB	(18)_____	0.3 dB	±0.100 dB
	–30 dBm	–0.3 dB	(19)_____	0.3 dB	±0.092 dB
	–40 dBm	–0.3 dB	(20)_____	0.3 dB	±0.094 dB
	–50 dBm	–0.5 dB	(21)_____	0.5 dB	±0.095 dB
	–60 dBm	–0.5 dB	(22)_____	0.5 dB	±0.097 dB
	–70 dBm	–0.5 dB	(23)_____	0.5 dB	±0.099 dB
	–80 dBm	–0.7 dB	(24)_____	0.7 dB	±0.101 dB
	Linear, Res BW ≤300 Hz *(Option 1DR only)*				
	Reference Level				
	–10 dBm	–0.3 dB	(25)_____	0.3 dB	±0.091 dB
	0 dBm	–0.3 dB	(26)_____	0.3 dB	±0.100 dB
	–30 dBm	–0.3 dB	(27)_____	0.3 dB	±0.092 dB
	–40 dBm	–0.3 dB	(28)_____	0.3 dB	±0.094 dB
	–50 dBm	–0.5 dB	(29)_____	0.5 dB	±0.095 dB
	–60 dBm	–0.5 dB	(30)_____	0.5 dB	±0.097 dB
	–70 dBm	–0.5 dB	(31)_____	0.5 dB	±0.099 dB
	–80 dBm	–0.7 dB	(32)_____	0.7 dB	±0.101 dB
16.	**Resolution Bandwidth Switching Uncertainty**				
	Resolution Bandwidth				
	3 kHz	–0.3 dB	(1)_____	0.3 dB	±0.048 dB
	9 kHz	–0.3 dB	(2)_____	0.3 dB	±0.048 dB
	10 kHz	–0.3 dB	(3)_____	0.3 dB	±0.048 dB
	30 kHz	–0.3 dB	(4)_____	0.3 dB	±0.048 dB
	100 kHz	–0.3 dB	(5)_____	0.3 dB	±0.048 dB

ManualsPlus.com

Table 3-10 Agilent E4405B Performance Verification Test Record

Agilent Technologies					
Model E4405B			**Report No. _____**		
Serial No. _____			**Date _____**		
Test Description		**Minimum**	**Results Measured**	**Maximum**	**Measurement Uncertainty**
	120 kHz	–0.3 dB	(6)_____	0.3 dB	±0.048 dB
	300 kHz	–0.3 dB	(7)_____	0.3 dB	±0.048 dB
	1 MHz	–0.3 dB	(8)_____	0.3 dB	±0.048 dB
	3 MHz	–0.3 dB	(9)_____	0.3 dB	±0.048 dB
	5 MHz	–0.6 dB	(10)_____	0.6 dB	±0.076 dB
	300 Hz *(Option 1DR only)*	–0.3 dB	(11)_____	0.3 dB	±0.048 dB
	200 Hz *(Option 1DR only)*	–0.3 dB	(12)_____	0.3 dB	±0.048 dB
	100 Hz *(Option 1DR only)*	–0.3 dB	(13)_____	0.3 dB	±0.048 dB
	30 Hz *(Option 1DR only)*	–0.3 dB	(14)_____	0.3 dB	±0.048 dB
	10 Hz *(Option 1DR only)*	–0.3 dB	(15)_____	0.3 dB	±0.048 dB
	3 Hz *(Option 1DR and 1D5 only)* Firmware Revision A.08.00 or later	–0.3 dB	(16)_____	0.3 dB	±0.048 dB
	1Hz *(Option 1DR and 1D5 only)* Firmware Revision A.08.00 or later	–0.3 dB	(17)_____	0.3 dB	±0.048 dB
18.	**Absolute Amplitude Accuracy (Reference Settings)**				
	Log, Preamp Off	–0.34 dB	(1)_____	0.34 dB	±0.09 dB
	Lin, Preamp Off	–0.34 dB	(2)_____	0.34 dB	±0.09 dB
	Log, Preamp On *(Option 1DS only)*	–0.37 dB	(3)_____	0.37 dB	±0.09 dB
	Lin, Preamp On *(Option 1DS only)*	–0.37 dB	(4)_____	0.37 dB	±0.09 dB
20.	**Overall Absolute Amplitude Accuracy**				
	0 dBm Reference Level				
	0 dBm input	–0.54 dB	(1)_____	0.54 dB	±0.234 dB

ManualsPlus.com

Table 3-10 Agilent E4405B Performance Verification Test Record

Agilent Technologies

Model E4405B **Report No.** _____

Serial No. _____ **Date** _____

Test Description		Minimum	Results Measured	Maximum	Measurement Uncertainty
	–10 dBm input	–0.54 dB	(2)_____	0.54 dB	±0.115 dB
	–20 dBm input	–0.54 dB	(3)_____	0.54 dB	±0.110 dB
	–30 dBm input	–0.54 dB	(4)_____	0.54 dB	±0.109 dB
	–40 dBm input	–0.54 dB	(5)_____	0.54 dB	±0.109 dB
	–50 dBm input	–0.54 dB	(6)_____	0.54 dB	±0.109 dB
	–20 dBm Reference Level				
	–20 dBm input	–0.54 dB	(7)_____	0.54 dB	±0.109 dB
	–30 dBm input	–0.54 dB	(8)_____	0.54 dB	±0.109 dB
	–40 dBm input	–0.54 dB	(9)_____	0.54 dB	±0.109 dB
	–50 dBm input	–0.54 dB	(10)_____	0.54 dB	±0.109 dB
	–40 dBm Reference Level				
	–40 dBm input	–0.54 dB	(11)_____	0.54 dB	±0.087 dB
	–50 dBm input	–0.54 dB	(12)_____	0.54 dB	±0.087 dB
	–50 dBm Reference Level				
	–50 dBm input	–0.54 dB	(13)_____	0.54 dB	±0.087 dB
21.	**Resolution Bandwidth Accuracy**				
	Resolution Bandwidth				
	5 MHz	3.5 MHz	(1)_____	6.5 MHz	±110 kHz
	3 MHz	2.55 MHz	(2)_____	3.45 MHz	±66 kHz
	1 MHz	0.85 MHz	(3)_____	1.15 MHz	±22 kHz
	300 kHz	255 kHz	(4)_____	345 kHz	±6.6 kHz
	100 kHz	85 kHz	(5)_____	115 kHz	±2.2 kHz
	30 kHz	25.5 kHz	(6)_____	34.5 kHz	±660 Hz
	10 kHz	8.5 kHz	(7)_____	11.5 kHz	±220 Hz
	3 kHz	2.55 kHz	(8)_____	3.45 kHz	±66 Hz

ManualsPlus.com

Table 3-10 Agilent E4405B Performance Verification Test Record

Agilent Technologies					
Model E4405B			**Report No. _____**		
Serial No. _____			**Date _____**		
Test Description		**Minimum**	**Results Measured**	**Maximum**	**Measurement Uncertainty**
	1 kHz	850 Hz	(9)_____	1.15 kHz	±22 Hz
	120 kHz	96 kHz	(10)_____	144 kHz	±2.17 kHz
	9 kHz	7.2 kHz	(11)_____	10.8 kHz	±163 Hz
24.	**Frequency Response**	Note: Enter data in the appropriate section below depending upon the ambient temperature at which the test was performed and installed options.			
	20 to 30° C				
	Non-Option UKB dc Coupled Band 0 (9 kHz to 3.0 GHz)				
	Maximum Response		(1)_____	0.46 dB	±0.19 dB
	Minimum Response	–0.46 dB	(2)_____		±0.19 dB
	Peak-to-Peak Response		(3)_____	0.92 dB	±0.19 dB
	Option UKB dc Coupled Band 0 (100 Hz to 3.0 GHz)				
	Maximum Response		(1)_____	0.50 dB	±0.19 dB
	Minimum Response	–0.50 dB	(2)_____		±0.19 dB
	Peak-to-Peak Response		(3)_____	1.0 dB	±0.19 dB
	dc Coupled Band 1 (3.0 GHz to 6.7 GHz)				
	Maximum Response		(4)_____	1.5 dB	±0.39 dB
	Minimum Response	–1.5 dB	(5)_____		±0.39 dB
	Peak-to-Peak Response		(6)_____	2.6 dB	±0.39 dB

ManualsPlus.com

Table 3-10 Agilent E4405B Performance Verification Test Record

Agilent Technologies

Model E4405B **Report No.** _____

Serial No. _____ **Date** _____

Test Description	Minimum	Results Measured	Maximum	Measurement Uncertainty
dc Coupled Band 2 (6.7 GHz to 13.2 GHz)				
Maximum Response		(7)_____	2.0 dB	±0.40 dB
Minimum Response	–2.0 dB	(8)_____		±0.40 dB
Peak-to-Peak Response		(9)_____	3.6 dB	±0.40 dB
ac Coupled Band 0 (100 kHz to 3.0 GHz)				
Maximum Response		(10)_____	0.5 dB	±0.11 dB
Minimum Response	–0.5 dB	(11)_____		±0.11 dB
Peak-to-Peak Response		(12)_____	1.0 dB	±0.11 dB
ac Coupled Band 0A (800 MHz to 1.0 GHz) (serial number US39440327 or greater)				
Maximum Response		(13)_____	0.5 dB	±0.11 dB
Minimum Response	–0.5 dB	(14)_____		±0.11 dB
Peak-to-Peak Response		(15)_____	1.0 dB	±0.11 dB
ac Coupled Band 0B (1.7 GHz to 2.0 GHz) (serial number US39440327 or greater)				
Maximum Response		(16)_____	0.5 dB	±0.11 dB

ManualsPlus.com

Table 3-10 Agilent E4405B Performance Verification Test Record

Agilent Technologies					
Model E4405B			**Report No. _____**		
Serial No. _____			**Date _____**		
Test Description		**Minimum**	**Results Measured**	**Maximum**	**Measurement Uncertainty**
	Minimum Response	–0.5 dB	(17)_____		±0.11 dB
	Peak-to-Peak Response		(18)_____	1.0 dB	±0.11 dB
	ac Coupled Band 1 (3.0 GHz to 6.7 GHz)				
	Maximum Response		(19)_____	1.5 dB	±0.39 dB
	Minimum Response	–1.5 dB	(20)_____		±0.39 dB
	Peak-to-Peak Response		(21)_____	2.6 dB	±0.39 dB
	ac Coupled Band 2 (6.7 GHz to 13.2 GHz)				
	Maximum Response		(22)_____	2.0 dB	±0.40 dB
	Minimum Response	–2.0 dB	(23)_____		±0.40 dB
	Peak-to-Peak Response		(24)_____	3.6 dB	±0.40 dB
	0 to 55° C Non-Option UKB dc Coupled Band 0 (9 kHz to 3.0 GHz)				
	Maximum Response		(1)_____	0.76 dB	±0.19 dB
	Minimum Response	–0.76 dB	(2)_____		±0.19 dB
	Peak-to-Peak Response		(3)_____	1.52 dB	±0.19 dB

ManualsPlus.com

Table 3-10 Agilent E4405B Performance Verification Test Record

Agilent Technologies

Model E4405B **Report No.** _____

Serial No. _____ **Date** _____

Test Description	Minimum	Results Measured	Maximum	Measurement Uncertainty
Option UKB dc Coupled Band 0 (100 Hz to 3.0 GHz)				
Maximum Response		(1)_____	1.0 dB	±0.19 dB
Minimum Response	–1.0 dB	(2)_____		±0.19 dB
Peak-to-Peak Response		(3)_____	2.0 dB	±0.19 dB
dc Coupled Band 1 (3.0 GHz to 6.7 GHz)				
Maximum Response		(4)_____	2.5 dB	±0.39 dB
Minimum Response	–2.5 dB	(5)_____		±0.39 dB
Peak-to-Peak Response		(6)_____	3.0 dB	±0.39 dB
dc Coupled Band 2 (6.7 GHz to 13.2 GHz)				
Maximum Response		(7)_____	3.0 dB	±0.40 dB
Minimum Response	–3.0 dB	(8)_____		±0.40 dB
Peak-to-Peak Response		(9)_____	4.0 dB	±0.40 dB
ac Coupled Band 0 (100 kHz to 3.0 GHz)				
Maximum Response		(10)_____	1.0 dB	±0.11 dB
Minimum Response	–1.0 dB	(11)_____		±0.11 dB
Peak-to-Peak Response		(12)_____	2.0 dB	±0.11 dB

ManualsPlus.com

Table 3-10 Agilent E4405B Performance Verification Test Record

Agilent Technologies

Model E4405B **Report No.** _____

Serial No. _____ **Date** _____

Test Description	Minimum	Results Measured	Maximum	Measurement Uncertainty
ac Coupled Band 0A (800 MHz to 1.0 GHz) (serial number US39440327 or greater)				
Maximum Response		(13)_____	1.0 dB	±0.11 dB
Minimum Response	–1.0 dB	(14)_____		±0.11 dB
Peak-to-Peak Response		(15)_____	2.0 dB	±0.11 dB
ac Coupled Band 0B (1.7 GHz to 2.0 GHz) (serial number US39440327 or greater)				
Maximum Response		(16)_____	1.0 dB	±0.11 dB
Minimum Response	–1.0 dB	(17)_____		±0.11 dB
Peak-to-Peak Response		(18)_____	2.0 dB	±0.11 dB
ac Coupled Band 1 (3.0 GHz to 6.7 GHz)				
Maximum Response		(19)_____	2.5 dB	±0.39 dB
Minimum Response	–2.5 dB	(20)_____		±0.39 dB
Peak-to-Peak Response		(21)_____	3.0 dB	±0.39 dB
ac Coupled Band 2 (6.7 GHz to 13.2 GHz)				
Maximum Response		(22)_____	3.0 dB	±0.40 dB
Minimum Response	–3.0 dB	(23)_____		±0.40 dB

ManualsPlus.com

Table 3-10 Agilent E4405B Performance Verification Test Record

Agilent Technologies					
Model E4405B			**Report No. _____**		
Serial No. _____			**Date _____**		
Test Description		**Minimum**	**Results Measured**	**Maximum**	**Measurement Uncertainty**
	Peak-to-Peak Response		(24)_____	4.0 dB	±0.40 dB
27.	**Frequency Response (Preamp On)** *(Option 1DS Only)*	Note: Enter data in the appropriate section below depending upon the ambient temperature at which the test was performed and installed options.			
	20 to 30° C				
	Band 0 (1 MHz to 3.0 GHz)				
	Maximum Response		(1)_____	1.5 dB	±0.28 dB
	Minimum Response	–1.5 dB	(2)_____		±0.28 dB
	Peak-to-Peak Response		(3)_____	3.0 dB	±0.28 dB
	Band 0A (800 MHz to 1.0 GHz) (serial number US39440327 or greater)				
	Maximum Response		(4)_____	1.5 dB	±0.28 dB
	Minimum Response	–1.5 dB	(5)_____		±0.28 dB
	Peak-to-Peak Response		(6)_____	3.0 dB	±0.28 dB
	Band 0B (1.7 GHz to 2.0 GHz) (serial number US39440327 or greater)				
	Maximum Response		(7)_____	1.5 dB	±0.28 dB
	Minimum Response	–1.5 dB	(8)_____		±0.28 dB
	Peak-to-Peak Response		(9)_____	3.0 dB	±0.28 dB

ManualsPlus.com

Table 3-10 Agilent E4405B Performance Verification Test Record

Agilent Technologies					
Model E4405B			**Report No. _____**		
Serial No. _____			**Date _____**		
Test Description		**Minimum**	**Results Measured**	**Maximum**	**Measurement Uncertainty**
	0 to 55° C				
	Band 0 (1 MHz to 3.0 GHz)				
	Maximum Response		(1)_____	2.0 dB	±0.28 dB
	Minimum Response	–2.0 dB	(2)_____		±0.28 dB
	Peak-to-Peak Response		(3)_____	4.0 dB	±0.28 dB
	Band 0A (800 MHz to 1.0 GHz) (serial number US39440327 or greater)				
	Maximum Response		(4)_____	2.0 dB	±0.28 dB
	Minimum Response	–2.0 dB	(5)_____		±0.28 dB
	Peak-to-Peak Response		(6)_____	4.0 dB	±0.28 dB
	Band 0B (1.7 GHz to 2.0 GHz) (serial number US39440327 or greater)				
	Maximum Response		(7)_____	2.0 dB	±0.28 dB
	Minimum Response	–2.0 dB	(8)_____		±0.28 dB
	Peak-to-Peak Response		(9)_____	4.0 dB	±0.28 dB
29.	**Other Input-Related Spurious Responses**				
	Center Freq Input Freq				
	2.0 GHz 2042.8 MHz		(1)_____	–65 dBc	±.891 dB
	2.0 GHz 2642.8 MHz		(2)_____	–65 dBc	±.891 dB
	2.0 GHz 1820.8 MHz		(3)_____	–65 dBc	±.891 dB
	2.0 GHz 278.5 MHz		(4)_____	–65 dBc	±.891 dB

ManualsPlus.com

Table 3-10 Agilent E4405B Performance Verification Test Record

Agilent Technologies

Model E4405B **Report No.** _____

Serial No. _____ **Date** _____

	Test Description	Minimum	Results Measured	Maximum	Measurement Uncertainty
	2.0 GHz 5600.0 MHz		(5)_____	–80 dBc	±.891 dB
	2.0 GHz 6242.8 MHz		(6)_____	–80 dBc	±.891 dB
	4.0 GHz 4042.8 MHz		(7)_____	–65 dBc	±.891 dB
	4.0 GHz 4642.8 MHz		(8)_____	–65 dBc	±.891 dB
	4.0 GHz 3742.9 MHz		(9)_____	–65 dBc	±.891 dB
	4.0 GHz 2242.8 MHz		(10)_____	–80 dBc	±.891 dB
	9.0 GHz 9042.8 MHz		(11)_____	–65 dBc	±.891 dB
	9.0 GHz 9642.8 MHz		(12)_____	–65 dBc	±.891 dB
	9.0 GHz 9342.8 MHz		(13)_____	–65 dBc	±.891 dB
	9.0 GHz 4982.1 MHz		(14)_____	–80 dBc	±.891 dB
32.	**Spurious Responses**				
	300 MHz TOI, 1 kHz RBW	12.5 dBm	(1)_____		±0.93 dB
	300 MHz TOI, 30 Hz RBW (*Option 1DR only)*	12.5 dBm	(2)_____		±0.93 dB
	5 GHz TOI	11 dBm	(3)_____		±0.93 dB
	8 GHz TOI	7.5 dBm	(4)_____		±0.93 dB
	300 MHz SHI	35 dBm	(5)_____		±0.41 dB
	900 MHz SHI	45 dBm	(6)_____		±0.41 dB
	1.55 GHz SHI	75 dBm	(7)_____		±0.41 dB
	3.1 GHz SHI	90 dBm	(8)_____		±0.41 dB
34.	**Gain Compression**				
	Test Frequency				
	53 MHz		(1)_____	1.0 dB	±0.123 dB
	50.004 MHz (*Option 1DR only)*		(2)_____	1.0 dB	±0.123 dB

ManualsPlus.com

Table 3-10 Agilent E4405B Performance Verification Test Record

Agilent Technologies					
Model E4405B			**Report No. _____**		
Serial No. _____			**Date _____**		
Test Description		**Minimum**	**Results Measured**	**Maximum**	**Measurement Uncertainty**
	1403 MHz		(3)_____	1.0 dB	±0.123 dB
	2503 MHz		(4)_____	1.0 dB	±0.123 dB
	4403 MHz		(5)_____	1.0 dB	±0.123 dB
	7603 MHz		(6)_____	1.0 dB	±0.123 dB
37.	**Displayed Average Noise Level**	Note: Enter results with preamp on in the appropriate section based upon the ambient temperature when the test was performed.			
	1 kHz RBW, Preamp Off				
	10 MHz to 1 GHz		(1)_____	–116 dBm	±1.23 dB
	1 GHz to 2 GHz		(2)_____	–116 dBm	±1.23 dB
	2 GHz to 3 GHz		(3)_____	–112 dBm	±1.23 dB
	3 GHz to 6 GHz		(4)_____	–112 dBm	±1.23 dB
	6 GHz to 12 GHz		(5)_____	–111 dBm	±1.23 dB
	12 GHz to 13.2 GHz		(6)_____	–107 dBm	±1.23 dB
	1 kHz RBW, Preamp On, 0 to 55° C				
	10 MHz to 1 GHz		(7)_____	–131 dBm	±1.23 dB
	1 GHz to 2 GHz		(8)_____	–131 dBm	±1.23 dB
	2 GHz to 3 GHz		(9)_____	–127 dBm	±1.23 dB
	10 Hz RBW, Preamp Off				
	10 MHz to 1 GHz		(10)_____	–135 dBm	±1.23 dB
	1 GHz to 2 GHz		(11)_____	–135 dBm	±1.23 dB
	2 GHz to 3 GHz		(12)_____	–131 dBm	±1.23 dB
	3 GHz to 6 GHz		(13)_____	–131 dBm	±1.23 dB
	6 GHz to 12 GHz		(14)_____	–130 dBm	±1.23 dB
	12 GHz to 13.2 GHz		(15)_____	–120 dBm	±1.23 dB

ManualsPlus.com

Table 3-10 Agilent E4405B Performance Verification Test Record

Agilent Technologies					
Model E4405B			**Report No. _____**		
Serial No. _____			**Date _____**		
Test Description		**Minimum**	**Results Measured**	**Maximum**	**Measurement Uncertainty**
	10 Hz RBW, Preamp On, 0 to 55° C				
	10 MHz to 1 GHz		(16)_____	–150 dBm	±1.23 dB
	1 GHz to 2 GHz		(17)_____	–150 dBm	±1.23 dB
	2 GHz to 3 GHz		(18)_____	–146 dBm	±1.23 dB
	1 kHz RBW, Preamp On, 20 to 30° C				
	10 MHz to 1 GHz		(19)_____	–132 dBm	±1.23 dB
	1 GHz to 2 GHz		(20)_____	–132 dBm	±1.23 dB
	2 GHz to 3 GHz		(21)_____	–130 dBm	±1.23 dB
	10 Hz RBW, Preamp On, 20 to 30° C				
	10 MHz to 1 GHz		(22)_____	–151 dBm	±1.23 dB
	1 GHz to 2 GHz		(23)_____	–151 dBm	±1.23 dB
	2 GHz to 3 GHz		(24)_____	–149 dBm	±1.23 dB
39.	**Residual Responses**				
	150 kHz to 6.7 GHz		(1)_____	–90 dBm	±0.87 dB
40.	**Fast Time Domain Amplitude Accuracy** *(Option AYX only)*				
	Amplitude Error	–0.3%	(1)_____	0.3%	±0.029%
42.	**Tracking Generator Absolute Amplitude and Vernier Accuracy** *(Option 1DN only)*				
	Absolute Amplitude Accuracy	–0.75 dB	(1)_____	0.75 dB	±0.096 dB
	Absolute Vernier Accuracy				

ManualsPlus.com

Table 3-10 Agilent E4405B Performance Verification Test Record

Agilent Technologies					
Model E4405B			**Report No. _____**		
Serial No. _____			**Date _____**		
Test Description		**Minimum**	**Results Measured**	**Maximum**	**Measurement Uncertainty**
	–2 dB	–0.5 dB	(2)_____	0.5 dB	±0.008 dB
	–3 dB	–0.5 dB	(3)_____	0.5 dB	±0.008 dB
	–5 dB	–0.5 dB	(4)_____	0.5 dB	±0.008 dB
	–6 dB	–0.5 dB	(5)_____	0.5 dB	±0.008 dB
	–7 dB	–0.5 dB	(6)_____	0.5 dB	±0.008 dB
	–8 dB	–0.5 dB	(7)_____	0.5 dB	±0.008 dB
	–9 dB	–0.5 dB	(8)_____	0.5 dB	±0.008 dB
	–10 dB	–0.5 dB	(9)_____	0.5 dB	±0.008 dB
	Incremental Vernier Accuracy				
	–2 dB	–0.2 dB	(10)_____	0.2 dB	±0.008 dB
	–3 dB	–0.2 dB	(11)_____	0.2 dB	±0.008 dB
	–5 dB	–0.2 dB	(12)_____	0.2 dB	±0.008 dB
	–6 dB	–0.2 dB	(13)_____	0.2 dB	±0.008 dB
	–7 dB	–0.2 dB	(14)_____	0.2 dB	±0.008 dB
	–8 dB	–0.2 dB	(15)_____	0.2 dB	±0.008 dB
	–9 dB	–0.2 dB	(16)_____	0.2 dB	±0.008 dB
	–10 dB	–0.2 dB	(17)_____	0.2 dB	±0.008 dB
44.	**Tracking Generator Level Flatness** *(Option 1DN only)*				
	Positive Level Flatness, <1 MHz		(1)_____	3.0 dB	±0.284 dB
	Negative Level Flatness, <1 MHz	–3.0 dB	(2)_____		±0.284 dB
	Positive Level Flatness, 1 MHz to 10 MHz		(3)_____	3.0 dB	±0.142 dB

ManualsPlus.com

Table 3-10 Agilent E4405B Performance Verification Test Record

Agilent Technologies

Model E4405B **Report No.** _____

Serial No. _____ **Date** _____

	Test Description	Minimum	Results Measured	Maximum	Measurement Uncertainty
	Negative Level Flatness, 1 MHz to 10 MHz	–3.0 dB	(4)_____		±0.142 dB
	Positive Level Flatness, >10 MHz to 1.5 GHz		(5)_____	2.0 dB	±0.142 dB
	Negative Level Flatness, >10 MHz to 1.5 GHz	–2.0 dB	(6)_____		±0.142 dB
	Positive Level Flatness, >1.5 GHz		(7)_____	2.0 dB	±0.142 dB
	Negative Level Flatness, >1.5 GHz	–2.0 dB	(8)_____		±0.142 dB
46.	**Tracking Generator Harmonic Spurious Outputs** *(Option 1DN only)*				
	2nd Harmonic, <20 kHz		(1)_____	–15 dBc	±2.6 dB
	2nd Harmonic, ≥ 20 kHz		(2)_____	–25 dBc	±2.6 dB
	3rd Harmonic, <20 kHz		(3)_____	–15 dBc	±2.6 dB
	3rd Harmonic, ≥ 20 kHz		(4)_____	–25 dBc	±2.6 dB
48.	**Tracking Generator Non-Harmonic Spurious Outputs** *(Option 1DN only)*				
	Highest Non-Harmonic Spurious Output Amplitude, 9 kHz to 2 GHz		(1)_____	–27 dBc	±2.63 dB
	Highest Non-Harmonic Spurious Output Amplitude, 2 GHz to 3 GHz		(2)_____	–23 dBc	±3.14 dB
49.	**Tracking Generator L.O. Feedthrough** *(Option 1DN only)*				

ManualsPlus.com

Table 3-10 Agilent E4405B Performance Verification Test Record

Agilent Technologies					
Model E4405B			**Report No. _____**		
Serial No. _____			**Date _____**		
Test Description		**Minimum**	**Results Measured**	**Maximum**	**Measurement Uncertainty**
	9 kHz to 2.9 GHz		(1)_____	–16 dBm	±2.58 dB
	2.9 GHz to 3.0 GHz		(2)_____	–16 dBm	±3.03 dB
50.	**Gate Delay Accuracy and Gate Length Accuracy** *(Option 1D6 only)*				
	Minimum Gate Delay	499.9 ns	(1)_____	1.5001µs	±549 ps
	Maximum Gate Delay	499.9 ns	(2)_____	1.5001µs	±549 ps
	1 µs Gate Length	499.9 ns	(3)_____	1.5001µs	±520 ps
	65 ms Gate Length	64.993 ms	(4)_____	65.007 ms	±647 ns
51.	**Gate Mode Additional Amplitude Error** *(Option 1D6 only)*				
	Amplitude Error	–0.2 dB	(1)_____	0.2 dB	±0.023 dB
58.	**GSM Phase and Frequency Error** *(Option BAH and B7E)*				
	Peak Phase Error	–2.1 Deg	(1)_____	2.1 Deg	0.52 Deg
	RMS Phase Error	–1.1 Deg	(2)_____	1.1 Deg	0.000063 Deg
	Frequency Error	–10 Hz	(3)_____	10 Hz	±0.006 Hz
59.	**Comms Absolute Power Accuracy** *(Options BAC or BAH)*				
	20 to 30° C				
	cdmaOne Channel Power Accuracy *(Option BAC only)*				
	Cellular Band Input Amplitude				
	15 dBm	–0.82 dB	(1)_____	0.82 dB	±0.173 dB

ManualsPlus.com

Table 3-10 Agilent E4405B Performance Verification Test Record

Agilent Technologies

Model E4405B **Report No.** _____

Serial No. _____ **Date** _____

Test Description	Minimum	Results Measured	Maximum	Measurement Uncertainty
–5 dBm	–0.82 dB	(2)_____	0.82 dB	±0.161 dB
–25 dBm	–0.78 dB	(3)_____	0.78 dB	±0.161 dB
–45 dBm	–0.69 dB	(4)_____	0.69 dB	±0.152 dB
–55 dBm	–0.77 dB	(5)_____	0.77 dB	±0.152 dB
–70 dBm	–0.89 dB	(6)_____	0.89 dB	±0.161 dB
PCS Band Input Amplitude				
15 dBm	–0.78 dB	(7)_____	0.78 dB	±0.173 dB
–5 dBm	–0.78 dB	(8)_____	0.78 dB	±0.161 dB
–25 dBm	–0.74 dB	(9)_____	0.74 dB	±0.161 dB
–45 dBm	–0.71 dB	(10)_____	0.71 dB	±0.152 dB
–55 dBm	–0.79 dB	(11)_____	0.79 dB	±0.152 dB
–70 dBm	–0.91 dB	(12)_____	0.91 dB	±0.161 dB
GSM Transmit Power Accuracy *(Option BAH only)*				
GSM Band Input Amplitude				
15 dBm	–0.81 dB	(13)_____	0.81 dB	±0.173 dB
–20 dBm	–0.81 dB	(14)_____	0.81 dB	±0.161 dB
–30 dBm	–0.74 dB	(15)_____	0.74 dB	±0.156 dB
–40 dBm	–0.79 dB	(16)_____	0.79 dB	±0.161 dB
–50 dBm	–0.95 dB	(17)_____	0.95 dB	±0.152 dB
–60 dBm	–1.09 dB	(18)_____	1.09 dB	±0.161 dB
DCS and PCS Bands Input Amplitude				
15 dBm	–0.77 dB	(19)_____	0.77 dB	±0.173 dB

ManualsPlus.com

Table 3-10 Agilent E4405B Performance Verification Test Record

Agilent Technologies

Model E4405B **Report No.** _____

Serial No. _____ **Date** _____

Test Description	Minimum	Results Measured	Maximum	Measurement Uncertainty
–20 dBm	–0.77 dB	(20)_____	0.77 dB	±0.161 dB
–30 dBm	–0.70 dB	(21)_____	0.70 dB	±0.156 dB
–40 dBm	–0.75 dB	(22)_____	0.75 dB	±0.161 dB
–50 dBm	–0.91 dB	(23)_____	0.91 dB	±0.152 dB
–60 dBm	–1.05 dB	(24)_____	1.05 dB	±0.161 dB
cdmaOne Receive Channel Power, Preamp Off *(Option BAC only)*				
Cellular Band Input Amplitude				
–40 dBm	–1.46 dB	(25)_____	1.46 dB	±0.161 dB
–60 dBm	–1.46 dB	(26)_____	1.46 dB	±0.161 dB
–70 dBm	–1.46 dB	(27)_____	1.46 dB	±0.161 dB
–80 dBm	–1.46 dB	(28)_____	1.46 dB	±0.161 dB
–85 dBm	–1.46 dB	(29)_____	1.46 dB	±0.152 dB
PCS Band Input Amplitude				
–40 dBm	–1.35 dB	(30)_____	1.35 dB	±0.161 dB
–60 dBm	–1.35 dB	(31)_____	1.35 dB	±0.161 dB
–70 dBm	–1.35 dB	(32)_____	1.35 dB	±0.161 dB
–80 dBm	–1.35 dB	(33)_____	1.35 dB	±0.161 dB
–85 dBm	–1.35 dB	(34)_____	1.35 dB	±0.152 dB
cdmaOne Receive Channel Power, Preamp On *(Option BAC only)*				
Cellular Band Input Amplitude				

ManualsPlus.com

Table 3-10 Agilent E4405B Performance Verification Test Record

Agilent Technologies					
Model E4405B			**Report No. _____**		
Serial No. _____			**Date _____**		
Test Description		**Minimum**	**Results Measured**	**Maximum**	**Measurement Uncertainty**
	–40 dBm	–1.88 dB	(35)_____	1.88 dB	±0.161 dB
	–60 dBm	–1.88 dB	(36)_____	1.88 dB	±0.161 dB
	–70 dBm	–1.88 dB	(37)_____	1.88 dB	±0.161 dB
	–80 dBm	–1.88 dB	(38)_____	1.88 dB	±0.161 dB
	–90 dBm	–2.95 dB	(39)_____	2.95 dB	±0.161 dB
	–100 dBm	–2.95 dB	(40)_____	2.95 dB	±0.161 dB
	PCS Band Input Amplitude				
	–40 dBm	–1.88 dB	(41)_____	1.88 dB	±0.161 dB
	–60 dBm	–1.88 dB	(42)_____	1.88 dB	±0.161 dB
	–70 dBm	–1.88 dB	(43)_____	1.88 dB	±0.161 dB
	–80 dBm	–1.88 dB	(44)_____	1.88 dB	±0.161 dB
	–90 dBm	–2.95 dB	(45)_____	2.95 dB	±0.161 dB
	–100 dBm	–2.95 dB	(46)_____	2.95 dB	±0.161 dB

ManualsPlus.com

Agilent E4407B Performance Verification Test Record

Tests for the Agilent E4407B only are included in this test record, therefore not all test numbers are included.

Table 3-11 E4407B Performance Verification Test Record

Agilent Technologies

Address: _____ Report No. _____

_____ Date _____

_____

Model E4407B

Serial No. _____ Ambient temperature _____° C

Options _____ Relative humidity_____%

Firmware Revision _____ Power mains line frequency _____ Hz (nominal)

Customer _____ Tested by _____

Test Equipment Used:

Description	Model No.	Trace No.	Cal Due Date
Synthesized Signal Generator	_____	_____	_____
Wide Offset Phase Noise Generator	_____	_____	_____
Synthesized Sweeper #1	_____	_____	_____
Synthesized Sweeper #2	_____	_____	_____
Function Generator	_____	_____	_____
Power Meter, Dual-Channel	_____	_____	_____
RF Power Sensor #1	_____	_____	_____
RF Power Sensor #2	_____	_____	_____
Microwave Power Sensor	_____	_____	_____
Low-Power Power Sensor	_____	_____	_____
Digital Multimeter	_____	_____	_____
Universal Counter	_____	_____	_____
Frequency Standard	_____	_____	_____

ManualsPlus.com

Table 3-11 E4407B Performance Verification Test Record

Power Splitter	_____	_____	_____
50 Ω Termination	_____	_____	_____
1 dB Step Attenuator	_____	_____	_____
10 dB Step Attenuator	_____	_____	_____
Oscilloscope *(Option 1D6 only)*	_____	_____	_____
Microwave Spectrum Analyzer *(Option 1DN only)*	_____	_____	_____
Notes/comments:	_____		
	_____		

Table 3-12 Agilent E4407B Performance Verification Test Record

Agilent Technologies

Model E4407B **Report No.** _____

Serial No. _____ **Date** _____

Test Description		**Minimum**	**Results Measured**	**Maximum**	**Measurement Uncertainty**
1.	**10 MHz Reference Output Accuracy** (*Non-Option 1D5 only*)				
	Settability	–5.0 Hz	(1)_____	5.0 Hz	±293.3 µHz
2.	**10 MHz High-Stability Frequency Reference Output Accuracy** (*Option 1D5 only*)				
	5 Minute Warm-Up Error	–0.1 ppm	(1)_____	0.1 ppm	±0.000072 ppm
	15 Minute Warm-Up Error	–0.01 ppm	(2)_____	0.01 ppm	±0.000070 ppm
4.	**Frequency Readout and Marker Frequency Count Accuracy**				
	Frequency Readout Accuracy				
	Center Freq Span				
	1500 MHz 20 MHz	1499.83 MHz	(1)_____	1500.17 MHz	±0 Hz
	1500 MHz 10 MHz	1499.91 MHz	(2)_____	1500.09 MHz	±0 Hz

ManualsPlus.com

Table 3-12 Agilent E4407B Performance Verification Test Record

Agilent Technologies

Model E4407B **Report No.** _____

Serial No. _____ **Date** _____

Test Description		Minimum	Results Measured	Maximum	Measurement Uncertainty
1500 MHz	1 MHz	1499.991 MHz	(3)_____	1500.009 MHz	±0 Hz
4000 MHz	20 MHz	3999.83 MHz	(4)_____	4000.17 MHz	±0 Hz
4000 MHz	10 MHz	3999.91 MHz	(5)_____	4000.09 MHz	±0 Hz
4000 MHz	1 MHz	3999.991 MHz	(6)_____	4000.009 MHz	±0 Hz
9000 MHz	20 MHz	8999.83 MHz	(7)_____	9000.17 MHz	±0 Hz
9000 MHz	10 MHz	8999.91 MHz	(8)_____	9000.09 MHz	±0 Hz
9000 MHz	1 MHz	8999.991 MHz	(9)_____	9000.009 MHz	±0 Hz
16000 MHz	20 MHz	15999.83 MHz	(10)_____	16000.17 MHz	±0 Hz
16000 MHz	10 MHz	15999.91 MHz	(11)_____	16000.09 MHz	±0 Hz
16000 MHz	1 MHz	15999.991 MHz	(12)_____	16000.009 MHz	±0 Hz
21000 MHz	20 MHz	20999.83 MHz	(13)_____	21000.17 MHz	±0 Hz
21000 MHz	10 MHz	20999.91 MHz	(14)_____	21000.09 MHz	±0 Hz
21000 MHz	1 MHz	20999.991 MHz	(15)_____	21000.009 MHz	±0 Hz
Marker Count Accuracy		Note: Enter results in the appropriate section below based upon the firmware revision of the analyzer.			
Firmware Revision Prior to A.03.00					
Center Freq	Span				
1500 MHz	20 MHz	1499.999998 MHz	(16)_____	1500.000002 MHz	±0 Hz

ManualsPlus.com

Table 3-12 Agilent E4407B Performance Verification Test Record

Agilent Technologies

Model E4407B **Report No.** _____

Serial No. _____ **Date** _____

Test Description		Minimum	Results Measured	Maximum	Measurement Uncertainty
	1500 MHz 1 MHz	1499.999998 MHz	(17)_____	1500.000002 MHz	±0 Hz
	4000 MHz 20 MHz	3999.999998 MHz	(18)_____	4000.000002 MHz	±0 Hz
	4000 MHz 1 MHz	3999.999998 MHz	(19)_____	4000.000002 MHz	±0 Hz
	9000 MHz 20 MHz	8999.999997 MHz	(20)_____	9000.000003 MHz	±0 Hz
	9000 MHz 1 MHz	8999.999997 MHz	(21)_____	9000.000003 MHz	±0 Hz
	16000 MHz 20 MHz	15999.999995 MHz	(22)_____	16000.000005 MHz	±0 Hz
	16000 MHz 1 MHz	20999.999995 MHz	(23)_____	21000.000005 MHz	±0 Hz
	21000 MHz 20 MHz	20999.999995 MHz	(24)_____	21000.000005 MHz	±0 Hz
	21000 MHz 1 MHz	20999.999995 MHz	(25)_____	21000.000005 MHz	±0 Hz
	Firmware Revision A.03.00 or later				
	Center Freq Span				
	1500 MHz 20 MHz	1499.999999 MHz	(16)_____	1500.000001 MHz	±0 Hz
	1500 MHz 1 MHz	1499.999999 MHz	(17)_____	1500.000001 MHz	±0 Hz
	4000 MHz 20 MHz	3999.999999 MHz	(18)_____	4000.000001 MHz	±0 Hz
	4000 MHz 1 MHz	3999.999999 MHz	(19)_____	4000.000001 MHz	±0 Hz
	9000 MHz 20 MHz	8999.999999 MHz	(20)_____	9000.000001 MHz	±0 Hz

ManualsPlus.com

Table 3-12 Agilent E4407B Performance Verification Test Record

Agilent Technologies

Model E4407B **Report No.** _____

Serial No. _____ **Date** _____

	Test Description		Minimum	Results Measured	Maximum	Measurement Uncertainty
	9000 MHz	1 MHz	8999.999999 MHz	(21)_____	9000.000001 MHz	±0 Hz
	16000 MHz	20 MHz	15999.999999 MHz	(22)_____	16000.000001 MHz	±0 Hz
	16000 MHz	1 MHz	20999.999999 MHz	(23)_____	21000.000001 MHz	±0 Hz
	21000 MHz	20 MHz	20999.999999 MHz	(24)_____	21000.000001 MHz	±0 Hz
	21000 MHz	1 MHz	20999.999999 MHz	(25)_____	21000.000001 MHz	±0 Hz
6.	**Frequency Span Accuracy**					
	Span	Start Freq				
	3000 MHz	0 Hz	2370 MHz	(1)_____	2430 MHz	±6.12 MHz
	100 MHz	10 MHz	79 MHz	(2)_____	81 MHz	±204 kHz
	100 kHz	10 MHz	79 kHz	(3)_____	81 kHz	±204 Hz
	100 MHz	800 MHz	79 MHz	(4)_____	81 MHz	±204 kHz
	100 kHz	800 MHz	79 kHz	(5)_____	81 kHz	±204 Hz
	100 MHz	1400 MHz	79 MHz	(6)_____	81 MHz	±204 kHz
	100 kHz	1499 MHz	79 kHz	(7)_____	81 kHz	±204 Hz
7.	**Noise Sidebands**					
	Offset from 1 GHz signal					
	(Serial Prefix < US4510, SG4510 or MY4510)					
	10 kHz			(1)_____	–90 dBc/Hz	±2.44 dB
	20 kHz			(2)_____	–100 dBc/Hz	±2.44 dB
	30 kHz			(3)_____	–106 dBc/Hz	±2.44 dB

ManualsPlus.com

Table 3-12 Agilent E4407B Performance Verification Test Record

Agilent Technologies					
Model E4407B			**Report No. _____**		
Serial No. _____			**Date _____**		
Test Description		**Minimum**	**Results Measured**	**Maximum**	**Measurement Uncertainty**
	(Serial Prefix ≥ US4510, SG4510 or MY4510, Option 1DR)				
	10 kHz		(1)_____	–98 dBc/Hz	±2.44 dB
	20 kHz		(2)_____	–104 dBc/Hz	±2.44 dB
	30 kHz		(3)_____	–110 dBc/Hz	±2.44 dB
	(Serial Prefix ≥ US4510, SG4510 or MY4510, Non-Option 1DR)				
	10 kHz		(1)_____	–90 dBc/Hz	±2.44 dB
	20 kHz		(2)_____	–104 dBc/Hz	±2.44 dB
	30 kHz		(3)_____	–110 dBc/Hz	±2.44 dB
8.	**Noise Sidebands - Wide Offsets**	Note: Enter data in the appropriate section below depending upon whether or not Option 120 (ACPR Dynamic Range Extension) is installed.			
	Non-Option 120				
	Offset from 1 GHz signal				
	100 kHz		(1)_____	–118 dBc/Hz	±2.44 dB
	1 MHz		(2)_____	–125 dBc/Hz	±2.44 dB
	5 MHz		(3)_____	–127 dBc/Hz	±2.44 dB
	10 MHz		(4)_____	–131 dBc/Hz	±2.44 dB
	Option 120				
	Offset from 1 GHz signal				
	100 kHz		(1)_____	–118 dBc/Hz	±2.44 dB
	1 MHz		(2)_____	–133 dBc/Hz	±2.44 dB
	5 MHz		(3)_____	–135 dBc/Hz	±2.44 dB
	10 MHz		(4)_____	–137 dBc/Hz	±2.44 dB

ManualsPlus.com

Table 3-12 Agilent E4407B Performance Verification Test Record

Agilent Technologies					
Model E4407B			**Report No. _____**		
Serial No. _____			**Date _____**		
Test Description		**Minimum**	**Results Measured**	**Maximum**	**Measurement Uncertainty**
9.	**System-Related Sidebands**				
	Offset from 500 MHz signal				
	30 kHz to 230 kHz		(1)_____	–65 dBc	±1.30 dB
	–30 kHz to –230 kHz		(2)_____	–65 dBc	±1.30 dB
10.	**Residual FM**				
	1 kHz Res BW, (*Non-Option 1D5)*		(1)_____	150 Hz	±21 Hz
	1 kHz Res BW, (*Option 1D5)*		(1)_____	100 Hz	±21 Hz
	10 Hz Res BW (*Options 1DR and 1D5 only*)		(2)_____	2 Hz	±0.27 Hz
11.	**Sweep Time Accuracy**				
	Sweep Time				
	5 ms	–1.0%	(1)_____	±1.0%	±0.16%
	20 ms	–1.0%	(2)_____	±1.0%	±0.16%
	100 ms	–1.0%	(3)_____	±1.0%	±0.16%
	1 s	–1.0%	(4)_____	±1.0%	±0.16%
	10 s	–1.0%	(5)_____	±1.0%	±0.16%
	1 ms (*Option AYX or B7D only)*	–1.0%	(6)_____	±1.0%	±0.16%
	500 µs (*Option AYX or B7D only)*	–1.0%	(7)_____	±1.0%	±0.16%
	100 µs (*Option AYX or B7D only)*	–1.0%	(8)_____	±1.0%	±0.16%
12.	**Display Scale Fidelity**				

ManualsPlus.com

Table 3-12 Agilent E4407B Performance Verification Test Record

Agilent Technologies

Model E4407B **Report No.** _____

Serial No. _____ **Date** _____

Test Description		Minimum	Results Measured	Maximum	Measurement Uncertainty
	Cumulative Log Fidelity, Res BW ≥1 kHz				
	dB from Ref Level				
	–4	–0.30 dB	(1)_____	0.30 dB	±0.082 dB
	–8	–0.30 dB	(2)_____	0.30 dB	±0.078 dB
	–12	–0.40 dB	(3)_____	0.40 dB	±0.075 dB
	–16	–0.40 dB	(4)_____	0.40 dB	±0.073 dB
	–20	–0.40 dB	(5)_____	0.40 dB	±0.078 dB
	–24	–0.50 dB	(6)_____	0.50 dB	±0.074 dB
	–28	–0.50 dB	(7)_____	0.50 dB	±0.073 dB
	–32	–0.60 dB	(8)_____	0.60 dB	±0.077 dB
	–36	–0.60 dB	(9)_____	0.60 dB	±0.075 dB
	–40	–0.60 dB	(10)_____	0.60 dB	±0.081 dB
	–44	–0.70 dB	(11)_____	0.70 dB	±0.077 dB
	–48	–0.70 dB	(12)_____	0.70 dB	±0.076 dB
	–52	–0.70dB	(13)_____	0.70 dB	±0.080 dB
	–56	–0.70 dB	(14)_____	0.70 dB	±0.078 dB
	–60	–0.70 dB	(15)_____	0.70 dB	±0.084 dB
	–64	–0.80 dB	(16)_____	0.80 dB	±0.081 dB
	–68	–0.80 dB	(17)_____	0.80 dB	±0.080 dB
	–72	–0.80 dB	(18)_____	0.80 dB	±0.084 dB
	–76	–0.80 dB	(19)_____	0.80 dB	±0.083 dB
	–80	–0.80 dB	(20)_____	0.80 dB	±0.089 dB
	–84	–1.15 dB	(21)_____	1.15 dB	±0.086 dB

ManualsPlus.com

Table 3-12 Agilent E4407B Performance Verification Test Record

Agilent Technologies

Model E4407B **Report No.** _____

Serial No. _____ **Date** _____

Test Description	Minimum	Results Measured	Maximum	Measurement Uncertainty
Incremental Log Fidelity, Res BW ≥1 kHz				
dB from Ref Level				
–4	–0.4 dB	(22)_____	0.4 dB	±0.082 dB
–8	–0.4 dB	(23)_____	0.4 dB	±0.078 dB
–12	–0.4 dB	(24)_____	0.4 dB	±0.075 dB
–16	–0.4 dB	(25)_____	0.4 dB	±0.073 dB
–20	–0.4 dB	(26)_____	0.4 dB	±0.078 dB
–24	–0.4 dB	(27)_____	0.4 dB	±0.074 dB
–28	–0.4 dB	(28)_____	0.4 dB	±0.073 dB
–32	–0.4 dB	(29)_____	0.4 dB	±0.077 dB
–36	–0.4 dB	(30)_____	0.4 dB	±0.075 dB
–40	–0.4 dB	(31)_____	0.4 dB	±0.081 dB
–44	–0.4 dB	(32)_____	0.4 dB	±0.077 dB
–48	–0.4 dB	(33)_____	0.4 dB	±0.076 dB
–52	–0.4 dB	(34)_____	0.4 dB	±0.080 dB
–56	–0.4 dB	(35)_____	0.4 dB	±0.078 dB
–60	–0.4 dB	(36)_____	0.4 dB	±0.084 dB
–64	–0.4 dB	(37)_____	0.4 dB	±0.081 dB
–68	–0.4 dB	(38)_____	0.4 dB	±0.080 dB
–72	–0.4 dB	(39)_____	0.4 dB	±0.084 dB
–76	–0.4 dB	(40)_____	0.4 dB	±0.083 dB
–80	–0.4 dB	(41)_____	0.4 dB	±0.089 dB
Cumulative Log Fidelity, Res BW ≤300 Hz *(Option 1DR only)*				
dB from Ref Level				

ManualsPlus.com

Table 3-12 Agilent E4407B Performance Verification Test Record

Agilent Technologies					
Model E4407B			**Report No. _____**		
Serial No. _____			**Date _____**		
Test Description		**Minimum**	**Results Measured**	**Maximum**	**Measurement Uncertainty**
	–4	–0.34 dB	(43)_____	0.34 dB	±0.082 dB
	–8	–0.38 dB	(44)_____	0.38 dB	±0.078 dB
	–12	–0.42 dB	(45)_____	0.42 dB	±0.075 dB
	–16	–0.46 dB	(46)_____	0.46 dB	±0.073 dB
	–20	–0.50 dB	(47)_____	0.50 dB	±0.078 dB
	–24	–0.54 dB	(48)_____	0.54 dB	±0.074 dB
	–28	–0.58 dB	(49)_____	0.58 dB	±0.073 dB
	–32	–0.62 dB	(50)_____	0.62 dB	±0.077 dB
	–36	–0.66 dB	(51)_____	0.66 dB	±0.075 dB
	–40	–0.70 dB	(52)_____	0.70 dB	±0.081 dB
	–44	–0.74 dB	(53)_____	0.74 dB	±0.077 dB
	–48	–0.78 dB	(54)_____	0.78 dB	±0.076 dB
	–52	–0.82 dB	(55)_____	0.82 dB	±0.080 dB
	–56	–0.86 dB	(56)_____	0.86 dB	±0.078 dB
	–60	–0.90 dB	(57)_____	0.90 dB	±0.084 dB
	–64	–0.94 dB	(58)_____	0.94 dB	±0.081 dB
	–68	–0.98 dB	(59)_____	0.98 dB	±0.080 dB
	–72	–1.02 dB	(60)_____	1.02 dB	±0.084 dB
	–76	–1.06 dB	(61)_____	1.06 dB	±0.083 dB
	–80	–1.10 dB	(62)_____	1.10 dB	±0.089 dB
	–84	–1.14 dB	(63)_____	1.14 dB	±0.086 dB
	–88	–1.18 dB	(64)_____	1.18 dB	±0.085 dB
	–92	–1.22 dB	(65)_____	1.22 dB	±0.100 dB
	–96	–1.26 dB	(66)_____	1.26 dB	±0.099 dB
	–98	–1.28 dB	(67)_____	1.28 dB	±0.098 dB

ManualsPlus.com

Table 3-12 Agilent E4407B Performance Verification Test Record

Agilent Technologies					
Model E4407B			**Report No. _____**		
Serial No. _____			**Date _____**		
Test Description		**Minimum**	**Results Measured**	**Maximum**	**Measurement Uncertainty**
	Incremental Log Fidelity, Res BW ≤300 Hz *(Option 1DR only)*				
	dB from Ref Level				
	–4	–0.4 dB	(68)_____	0.4 dB	±0.082 dB
	–8	–0.4 dB	(69)_____	0.4 dB	±0.078 dB
	–12	–0.4 dB	(70)_____	0.4 dB	±0.075 dB
	–16	–0.4 dB	(71)_____	0.4 dB	±0.073 dB
	–20	–0.4 dB	(72)_____	0.4 dB	±0.078 dB
	–24	–0.4 dB	(73)_____	0.4 dB	±0.074 dB
	–28	–0.4 dB	(74)_____	0.4 dB	±0.073 dB
	–32	–0.4 dB	(75)_____	0.4 dB	±0.077 dB
	–36	–0.4 dB	(76)_____	0.4 dB	±0.075 dB
	–40	–0.4 dB	(77)_____	0.4 dB	±0.081 dB
	–44	–0.4 dB	(78)_____	0.4 dB	±0.077 dB
	–48	–0.4 dB	(79)_____	0.4 dB	±0.076 dB
	–52	–0.4 dB	(80)_____	0.4 dB	±0.080 dB
	–56	–0.4 dB	(81)_____	0.4 dB	±0.078 dB
	–60	–0.4 dB	(82)_____	0.4 dB	±0.084 dB
	–64	–0.4 dB	(83)_____	0.4 dB	±0.081 dB
	–68	–0.4 dB	(84)_____	0.4 dB	±0.080 dB
	–72	–0.4 dB	(85)_____	0.4 dB	±0.084 dB
	–76	–0.4 dB	(86)_____	0.4 dB	±0.083 dB
	–80	–0.4 dB	(87)_____	0.4 dB	±0.089 dB
	Linear Fidelity, Res BW ≥1 kHz				
	dB from Ref Level				

ManualsPlus.com

Table 3-12 Agilent E4407B Performance Verification Test Record

Agilent Technologies

Model E4407B **Report No.** _____

Serial No. _____ **Date** _____

Test Description	Minimum	Results Measured	Maximum	Measurement Uncertainty
–4	–2.0%	(93)_____	2.0%	±0.064%
–8	–2.0%	(94)_____	2.0%	±0.064%
–12	–2.0%	(95)_____	2.0%	±0.064%
–16	–2.0%	(96)_____	2.0%	±0.064%
–20	–2.0%	(97)_____	2.0%	±0.063%
Linear Fidelity, Res BW ≤300 Hz *(Option 1DR only)*				
dB from Ref Level				
–4	–2.0%	(98)_____	2.0%	±0.064%
–8	–2.0%	(99)_____	2.0%	±0.064%
–12	–2.0%	(100)_____	2.0%	±0.064%
–16	–2.0%	(101)_____	2.0%	±0.064%
–20	–2.0%	(102)_____	2.0%	±0.063%
Zero Span, Res BW ≤300 Hz *(Option 1DR only)*				
dB from Ref Level				
–4	–0.36 dB	(103)_____	0.36 dB	±0.082 dB
–8	–0.42 dB	(104)_____	0.42 dB	±0.078 dB
–12	–0.48 dB	(105)_____	0.48 dB	±0.075 dB
–16	–0.54 dB	(106)_____	0.54 dB	±0.073 dB
–20	–0.60 dB	(107)_____	0.60 dB	±0.078 dB
–24	–0.66 dB	(108)_____	0.66 dB	±0.074 dB
–28	–0.72 dB	(109)_____	0.72 dB	±0.073 dB
–32	–0.78 dB	(110)_____	0.78 dB	±0.077 dB
–36	–0.84 dB	(111)_____	0.84 dB	±0.075 dB

ManualsPlus.com

Table 3-12 Agilent E4407B Performance Verification Test Record

Agilent Technologies					
Model E4407B			**Report No. _____**		
Serial No. _____			**Date _____**		
Test Description		**Minimum**	**Results Measured**	**Maximum**	**Measurement Uncertainty**
	–40	–0.90 dB	(112)_____	0.90 dB	±0.081 dB
	–44	–0.96 dB	(113)_____	0.96 dB	±0.077 dB
	–48	–1.02 dB	(114)_____	1.02 dB	±0.076 dB
	–52	–1.08 dB	(115)_____	1.08 dB	±0.080 dB
	–56	–1.14 dB	(116)_____	1.14 dB	±0.078 dB
	–60	–1.20 dB	(117)_____	1.20 dB	±0.084 dB
	–64	–1.5 dB	(118)_____	1.5 dB	±0.081 dB
	–68	–1.5 dB	(119)_____	1.5 dB	±0.080 dB
	–70	–1.5 dB	(120)_____	1.5 dB	±0.084 dB
13.	**Input Attenuation Switching Uncertainty**				
	Input Attenuation Setting				
	0 dB	–0.3 dB	(1)_____	0.3 dB	±0.101 dB
	5 dB	–0.3 dB	(2)_____	0.3 dB	±0.104 dB
	15 dB	–0.3 dB	(3)_____	0.3 dB	±0.102 dB
	20 dB	–0.3 dB	(4)_____	0.3 dB	±0.098 dB
	25 dB	–0.35 dB	(5)_____	0.35 dB	±0.098 dB
	30 dB	–0.40 dB	(6)_____	0.40 dB	±0.096 dB
	35 dB	–0.45 dB	(7)_____	0.45 dB	±0.099 dB
	40 dB	–0.50 dB	(8)_____	0.50 dB	±0.096 dB
	45 dB	–0.55 dB	(9)_____	0.55 dB	±0.099 dB
	50 dB	–0.60 dB	(10)_____	0.60 dB	±0.095 dB
	55 dB	–0.65 dB	(11)_____	0.65 dB	±0.099 dB
	60 dB	–0.70 dB	(12)_____	0.70 dB	±0.100 dB
	65 dB	–0.75 dB	(13)_____	0.75 dB	±0.111 dB

ManualsPlus.com

Table 3-12 Agilent E4407B Performance Verification Test Record

Agilent Technologies					
Model E4407B			**Report No. _____**		
Serial No. _____			**Date _____**		
Test Description		**Minimum**	**Results Measured**	**Maximum**	**Measurement Uncertainty**
15.	**Reference Level Accuracy**				
	Log, Res BW ≥1 kHz				
	Reference Level				
	–10 dBm	–0.3 dB	(1)_____	0.3 dB	±0.091 dB
	0 dBm	–0.3 dB	(2)_____	0.3 dB	±0.100 dB
	–30 dBm	–0.3 dB	(3)_____	0.3 dB	±0.092 dB
	–40 dBm	–0.3 dB	(4)_____	0.3 dB	±0.094 dB
	–50 dBm	–0.5 dB	(5)_____	0.5 dB	±0.095 dB
	–60 dBm	–0.5 dB	(6)_____	0.5 dB	±0.097 dB
	–70 dBm	–0.5 dB	(7)_____	0.5 dB	±0.099 dB
	–80 dBm	–0.7 dB	(8)_____	0.7 dB	±0.101 dB
	Linear, Res BW ≥1 kHz				
	Reference Level				
	–10 dBm	–0.3 dB	(9)_____	0.3 dB	±0.091 dB
	0 dBm	–0.3 dB	(10)_____	0.3 dB	±0.100 dB
	–30 dBm	–0.3 dB	(11)_____	0.3 dB	±0.092 dB
	–40 dBm	–0.3 dB	(12)_____	0.3 dB	±0.094 dB
	–50 dBm	–0.5 dB	(13)_____	0.5 dB	±0.095 dB
	–60 dBm	–0.5 dB	(14)_____	0.5 dB	±0.097 dB
	–70 dBm	–0.5 dB	(15)_____	0.5 dB	±0.099 dB
	–80 dBm	–0.7 dB	(16)_____	0.7 dB	±0.101 dB
	Log, Res BW ≤300 Hz *(Option 1DR only)*				
	Reference Level				
	–10 dBm	–0.3 dB	(17)_____	0.3 dB	±0.091 dB

ManualsPlus.com

Table 3-12 Agilent E4407B Performance Verification Test Record

Agilent Technologies					
Model E4407B			**Report No. _____**		
Serial No. _____			**Date _____**		
Test Description		**Minimum**	**Results Measured**	**Maximum**	**Measurement Uncertainty**
	0 dBm	–0.3 dB	(18)_____	0.3 dB	±0.100 dB
	–30 dBm	–0.3 dB	(19)_____	0.3 dB	±0.092 dB
	–40 dBm	–0.3 dB	(20)_____	0.3 dB	±0.094 dB
	–50 dBm	–0.5 dB	(21)_____	0.5 dB	±0.095 dB
	–60 dBm	–0.5 dB	(22)_____	0.5 dB	±0.097 dB
	–70 dBm	–0.5 dB	(23)_____	0.5 dB	±0.099 dB
	–80 dBm	–0.7 dB	(24)_____	0.7 dB	±0.101 dB
	Linear, Res BW ≤300 Hz *(Option 1DR only)*				
	Reference Level				
	–10 dBm	–0.3 dB	(25)_____	0.3 dB	±0.091 dB
	0 dBm	–0.3 dB	(26)_____	0.3 dB	±0.100 dB
	–30 dBm	–0.3 dB	(27)_____	0.3 dB	±0.092 dB
	–40 dBm	–0.3 dB	(28)_____	0.3 dB	±0.094 dB
	–50 dBm	–0.5 dB	(29)_____	0.5 dB	±0.095 dB
	–60 dBm	–0.5 dB	(30)_____	0.5 dB	±0.097 dB
	–70 dBm	–0.5 dB	(31)_____	0.5 dB	±0.099 dB
	–80 dBm	–0.7 dB	(32)_____	0.7 dB	±0.101 dB
16.	**Resolution Bandwidth Switching Uncertainty**				
	Resolution Bandwidth				
	3 kHz	–0.3 dB	(1)_____	0.3 dB	±0.048 dB
	9 kHz	–0.3 dB	(2)_____	0.3 dB	±0.048 dB
	10 kHz	–0.3 dB	(3)_____	0.3 dB	±0.048 dB
	30 kHz	–0.3 dB	(4)_____	0.3 dB	±0.048 dB
	100 kHz	–0.3 dB	(5)_____	0.3 dB	±0.048 dB

ManualsPlus.com

Table 3-12 Agilent E4407B Performance Verification Test Record

Agilent Technologies

Model E4407B **Report No.** _____

Serial No. _____ **Date** _____

Test Description		Minimum	Results Measured	Maximum	Measurement Uncertainty
	120 kHz	–0.3 dB	(6)_____	0.3 dB	±0.048 dB
	300 kHz	–0.3 dB	(7)_____	0.3 dB	±0.048 dB
	1 MHz	–0.3 dB	(8)_____	0.3 dB	±0.048 dB
	3 MHz	–0.3 dB	(9)_____	0.3 dB	±0.048 dB
	5 MHz	–0.6 dB	(10)_____	0.6 dB	±0.076 dB
	300 Hz *(Option 1DR only)*	–0.3 dB	(11)_____	0.3 dB	±0.048 dB
	200 Hz *(Option 1DR only)*	–0.3 dB	(12)_____	0.3 dB	±0.048 dB
	100 Hz *(Option 1DR only)*	–0.3 dB	(13)_____	0.3 dB	±0.048 dB
	30 Hz *(Option 1DR only)*	–0.3 dB	(14)_____	0.3 dB	±0.048 dB
	10 Hz *(Option 1DR only)*	–0.3 dB	(15)_____	0.3 dB	±0.048 dB
	3 Hz *(Option 1DR and 1D5 only)* Firmware Revision A.08.00 or later	–0.3 dB	(16)_____	0.3 dB	±0.048 dB
	1Hz *(Option 1DR and 1D5 only)* Firmware Revision A.08.00 or later	–0.3 dB	(17)_____	0.3 dB	±0.048 dB
18.	**Absolute Amplitude Accuracy (Reference Settings)**				
	Log, Preamp Off	–0.34 dB	(1)_____	0.34 dB	±0.09 dB
	Lin, Preamp Off	–0.34 dB	(2)_____	0.34 dB	±0.09 dB
	Log, Preamp On *(Option 1DS only)*	–0.37 dB	(3)_____	0.37 dB	±0.09 dB
	Lin, Preamp On *(Option 1DS only)*	–0.37 dB	(4)_____	0.37 dB	±0.09 dB
20.	**Overall Absolute Amplitude Accuracy**				
	0 dBm Reference Level				
	0 dBm input	–0.54 dB	(1)_____	0.54 dB	±0.234 dB

ManualsPlus.com

Table 3-12 Agilent E4407B Performance Verification Test Record

Agilent Technologies

Model E4407B **Report No.** _____

Serial No. _____ **Date** _____

Test Description		Minimum	Results Measured	Maximum	Measurement Uncertainty
	–10 dBm input	–0.54 dB	(2)_____	0.54 dB	±0.115 dB
	–20 dBm input	–0.54 dB	(3)_____	0.54 dB	±0.110 dB
	–30 dBm input	–0.54 dB	(4)_____	0.54 dB	±0.109 dB
	–40 dBm input	–0.54 dB	(5)_____	0.54 dB	±0.109 dB
	–50 dBm input	–0.54 dB	(6)_____	0.54 dB	±0.109 dB
	–20 dBm Reference Level				
	–20 dBm input	–0.54 dB	(7)_____	0.54 dB	±0.109 dB
	–30 dBm input	–0.54 dB	(8)_____	0.54 dB	±0.109 dB
	–40 dBm input	–0.54 dB	(9)_____	0.54 dB	±0.109 dB
	–50 dBm input	–0.54 dB	(10)_____	0.54 dB	±0.109 dB
	–40 dBm Reference Level				
	–40 dBm input	–0.54 dB	(11)_____	0.54 dB	±0.087 dB
	–50 dBm input	–0.54 dB	(12)_____	0.54 dB	±0.087 dB
	–50 dBm Reference Level				
	–50 dBm input	–0.54 dB	(13)_____	0.54 dB	±0.087 dB
21.	**Resolution Bandwidth Accuracy**				
	Resolution Bandwidth				
	5 MHz	3.5 MHz	(1)_____	6.5 MHz	±110 kHz
	3 MHz	2.55 MHz	(2)_____	3.45 MHz	±66 kHz
	1 MHz	0.85 MHz	(3)_____	1.15 MHz	±22 kHz
	300 kHz	255 kHz	(4)_____	345 kHz	±6.6 kHz
	100 kHz	85 kHz	(5)_____	115 kHz	±2.2 kHz
	30 kHz	25.5 kHz	(6)_____	34.5 kHz	±660 Hz
	10 kHz	8.5 kHz	(7)_____	11.5 kHz	±220 Hz
	3 kHz	2.55 kHz	(8)_____	3.45 kHz	±66 Hz

ManualsPlus.com

Table 3-12 Agilent E4407B Performance Verification Test Record

Agilent Technologies					
Model E4407B			**Report No. _____**		
Serial No. _____			**Date _____**		
Test Description		**Minimum**	**Results Measured**	**Maximum**	**Measurement Uncertainty**
	1 kHz	850 Hz	(9)_____	1.15 kHz	±22 Hz
	120 kHz	96 kHz	(10)_____	144 kHz	±2.17 kHz
	9 kHz	7.2 kHz	(11)_____	10.8 kHz	±163 Hz
24.	**Frequency Response**	Note: Enter data in the appropriate section below depending upon the ambient temperature at which the test was performed and installed options.			
	20 to 30° C				
	Non-Option UKB dc Coupled Band 0 (9 kHz to 3.0 GHz)				
	Maximum Response		(1)_____	0.46 dB	±0.19 dB
	Minimum Response	–0.46 dB	(2)_____		±0.19 dB
	Peak-to-Peak Response		(3)_____	0.92 dB	±0.19 dB
	Option UKB dc Coupled Band 0 (100 Hz to 3.0 GHz				
	Maximum Response		(1)_____	0.5 dB	±0.19 dB
	Minimum Response	–0.5 dB	(2)_____		±0.19 dB
	Peak-to-Peak Response		(3)_____	1.0 dB	±0.19 dB
	Non-Option UKB dc Coupled Band 0A (800 MHz to 1.0 GHz) (serial number US39440871 or greater)				
	Maximum Response		(4)_____	0.46 dB	±0.11 dB
	Minimum Response	–0.46 dB	(5)_____		±0.11 dB

ManualsPlus.com

Table 3-12 Agilent E4407B Performance Verification Test Record

Agilent Technologies

Model E4407B **Report No.** _____

Serial No. _____ **Date** _____

Test Description	Minimum	Results Measured	Maximum	Measurement Uncertainty
Peak-to-Peak Response		(6)_____	0.92 dB	±0.11 dB
Non-Option UKB dc Coupled Band 0B (1.7 GHz to 2.0 GHz) (serial number US39440871 or greater)				
Maximum Response		(7)_____	0.46 dB	±0.11 dB
Minimum Response	–0.46 dB	(8)_____		±0.11 dB
Peak-to-Peak Response		(9)_____	0.92 dB	±0.11 dB
dc Coupled Band 1 (3.0 GHz to 6.7 GHz)				
Maximum Response		(10)_____	1.5 dB	±0.39 dB
Minimum Response	–1.5 dB	(11)_____		±0.39 dB
Peak-to-Peak Response		(12)_____	2.6 dB	±0.39 dB
dc Coupled Band 2 (6.7 GHz to 13.2 GHz)				
Maximum Response		(13)_____	2.0 dB	±0.40 dB
Minimum Response	–2.0 dB	(14)_____		±0.40 dB
Peak-to-Peak Response		(15)_____	3.6 dB	±0.40 dB
dc Coupled Band 3 (13.2 GHz to 26.5 GHz)				
Maximum Response		(16)_____	2.0 dB	±0.59 dB

ManualsPlus.com

Table 3-12 Agilent E4407B Performance Verification Test Record

Agilent Technologies

Model E4407B **Report No.** _____

Serial No. _____ **Date** _____

Test Description	Minimum	Results Measured	Maximum	Measurement Uncertainty
Minimum Response	–2.0 dB	(17)_____		±0.59 dB
Peak-to-Peak Response		(18)_____	3.6 dB	±0.59 dB
Option UKB ac Coupled Band 0 (10 MHz to 3.0 GHz)				
Maximum Response		(19)_____	0.5 dB	±0.11 dB
Minimum Response	–0.5 dB	(20)_____		±0.11 dB
Peak-to-Peak Response		(21)_____	1.0 dB	±0.11 dB
Option UKB ac Coupled Band 0A (800 MHz to 1.0 GHz) (serial number US39440871 or greater)				
Maximum Response		(22)_____	0.5 dB	±0.11 dB
Minimum Response	–0.5 dB	(23)_____		±0.11 dB
Peak-to-Peak Response		(24)_____	1.0 dB	±0.11 dB
Option UKB ac Coupled Band 0B (1.7 GHz to 2.0 GHz) (serial number US39440871 or greater)				
Maximum Response		(25)_____	0.5 dB	±0.11 dB
Minimum Response	–0.5 dB	(26)_____		±0.11 dB
Peak-to-Peak Response		(27)_____	1.0 dB	±0.11 dB

ManualsPlus.com

Table 3-12 Agilent E4407B Performance Verification Test Record

Agilent Technologies

Model E4407B **Report No.** _____

Serial No. _____ **Date** _____

Test Description	Minimum	Results Measured	Maximum	Measurement Uncertainty
ac Coupled Band 1 (3.0 GHz to 6.7 GHz)				
Maximum Response		(28)_____	1.5 dB	±0.39 dB
Minimum Response	–1.5 dB	(29)_____		±0.39 dB
Peak-to-Peak Response		(30)_____	2.6 dB	±0.39 dB
ac Coupled Band 2 (6.7 GHz to 13.2 GHz)				
Maximum Response		(31)_____	2.0 dB	±0.40 dB
Minimum Response	–2.0 dB	(32)_____		±0.40 dB
Peak-to-Peak Response		(33)_____	3.6 dB	±0.40 dB
ac Coupled Band 3 (13.2 GHz to 26.5 GHz)				
Maximum Response		(34)_____	2.0 dB	±0.59 dB
Minimum Response	–2.0 dB	(35)_____		±0.59 dB
Peak-to-Peak Response		(36)_____	3.6 dB	±0.59 dB
0 to 55° C				
Non-Option UKB dc Coupled Band 0 (9 kHz to 3.0 GHz)				
Maximum Response		(1)_____	0.76 dB	±0.19 dB
Minimum Response	–0.76 dB	(2)_____		±0.19 dB
Peak-to-Peak Response		(3)_____	1.52 dB	±0.19 dB

ManualsPlus.com

Table 3-12 Agilent E4407B Performance Verification Test Record

Agilent Technologies

Model E4407B **Report No.** _____

Serial No. _____ **Date** _____

Test Description	Minimum	Results Measured	Maximum	Measurement Uncertainty
Option UKB dc Coupled Band 0 (100 Hz to 3.0 GHz)				
Maximum Response		(1)_____	1.0 dB	±0.19 dB
Minimum Response	–1.0 dB	(2)_____		±0.19 dB
Peak-to-Peak Response		(3)_____	2.0 dB	±0.19 dB
Non-Option UKB dc Coupled Band 0A (800 MHz to 1.0 GHz) (serial number US39440871 or greater)				
Maximum Response		(4)_____	0.76 dB	±0.11 dB
Minimum Response	–0.76 dB	(5)_____		±0.11 dB
Peak-to-Peak Response		(6)_____	1.52 dB	±0.11 dB
Non-Option UKB dc Coupled Band 0B (1.7 GHz to 2.0 GHz) (serial number US39440871 or greater)				
Maximum Response		(7)_____	0.76 dB	±0.11 dB
Minimum Response	–0.76 dB	(8)_____		±0.11 dB
Peak-to-Peak Response		(9)_____	1.52 dB	±0.11 dB
dc Coupled Band 1 (3.0 GHz to 6.7 GHz)				

ManualsPlus.com

Table 3-12 Agilent E4407B Performance Verification Test Record

Agilent Technologies

Model E4407B **Report No.** _____

Serial No. _____ **Date** _____

Test Description	Minimum	Results Measured	Maximum	Measurement Uncertainty
Maximum Response		(10)_____	2.5 dB	±0.39 dB
Minimum Response	–2.5 dB	(11)_____		±0.39 dB
Peak-to-Peak Response		(12)_____	3.0 dB	±0.39 dB
dc Coupled Band 2 (6.7 GHz to 13.2 GHz)				
Maximum Response		(13)_____	3.0 dB	±0.40 dB
Minimum Response	–3.0 dB	(14)_____		±0.40 dB
Peak-to-Peak Response		(15)_____	4.0 dB	±0.40 dB
dc Coupled Band 3 (13.2 GHz to 26.5 GHz)				
Maximum Response		(16)_____	3.0 dB	±0.59 dB
Minimum Response	–3.0 dB	(17)_____		±0.59 dB
Peak-to-Peak Response		(18)_____	4.0 dB	±0.59 dB
Option UKB ac Coupled Band 0 (10 MHz to 3.0 GHz)				
Maximum Response		(19)_____	1.0 dB	±0.11 dB
Minimum Response	–1.0 dB	(20)_____		±0.11 dB
Peak-to-Peak Response		(21)_____	2.0 dB	±0.11 dB

ManualsPlus.com

Table 3-12 Agilent E4407B Performance Verification Test Record

Agilent Technologies					
Model E4407B			**Report No. _____**		
Serial No. _____			**Date _____**		
Test Description		**Minimum**	**Results Measured**	**Maximum**	**Measurement Uncertainty**
	Option UKB ac Coupled Band 0A (800 MHz to 1.0 GHz) (serial number US39440871 or greater)				
	Maximum Response		(22)_____	1.0 dB	±0.11 dB
	Minimum Response	–1.0 dB	(23)_____		±0.11 dB
	Peak-to-Peak Response		(24)_____	2.0 dB	±0.11 dB
	Option UKB ac Coupled Band 0B (1.7 GHz to 2.0 GHz) (serial number US39440871 or greater)				
	Maximum Response		(25)_____	1.0 dB	±0.11 dB
	Minimum Response	–1.0 dB	(26)_____		±0.11 dB
	Peak-to-Peak Response		(27)_____	2.0 dB	±0.11 dB
	ac Coupled Band 1 (3.0 GHz to 6.7 GHz)				
	Maximum Response		(28)_____	2.5 dB	±0.39 dB
	Minimum Response	–2.5 dB	(29)_____		±0.39 dB
	Peak-to-Peak Response		(30)_____	3.0 dB	±0.39 dB
	ac Coupled Band 2 (6.7 GHz to 13.2 GHz)				
	Maximum Response		(31)_____	3.0 dB	±0.40 dB

ManualsPlus.com

Table 3-12 Agilent E4407B Performance Verification Test Record

Agilent Technologies					
Model E4407B			**Report No. _____**		
Serial No. _____			**Date _____**		
Test Description		**Minimum**	**Results Measured**	**Maximum**	**Measurement Uncertainty**
	Minimum Response	–3.0 dB	(32)_____		±0.40 dB
	Peak-to-Peak Response		(33)_____	4.0 dB	±0.40 dB
	ac Coupled Band 3 (13.2 GHz to 26.5 GHz)				
	Maximum Response		(34)_____	3.0 dB	±0.59 dB
	Minimum Response	–3.0 dB	(35)_____		±0.59 dB
	Peak-to-Peak Response		(36)_____	4.0 dB	±0.59 dB
27.	**Frequency Response (Preamp On)** *(Option 1DS Only)*	Note: Enter data in the appropriate section below depending upon the ambient temperature at which the test was performed and installed options.			
	20 to 30° C				
	Non-Option UKB dc Coupled Band 0 (1 MHz to 3.0 GHz)				
	Maximum Response		(1)_____	1.5 dB	±0.28 dB
	Minimum Response	–1.5 dB	(2)_____		±0.28 dB
	Peak-to-Peak Response		(3)_____	3.0 dB	±0.28 dB
	Non-Option UKB dc Coupled Band 0A (800 MHz to 1.0 GHz) (serial number US39440871 or greater)				
	Maximum Response		(4)_____	1.5 dB	±0.28 dB
	Minimum Response	–1.5 dB	(5)_____		±0.28 dB
	Peak-to-Peak Response		(6)_____	3.0 dB	±0.28 dB

ManualsPlus.com

Table 3-12 Agilent E4407B Performance Verification Test Record

Agilent Technologies					
Model E4407B			**Report No. _____**		
Serial No. _____			**Date _____**		
Test Description		**Minimum**	**Results Measured**	**Maximum**	**Measurement Uncertainty**
	Non-Option UKB dc Coupled Band 0B (1.7 GHz to 2.0 GHz) (serial number US39440871 or greater)				
	Maximum Response		(7)_____	1.5 dB	±0.28 dB
	Minimum Response	–1.5 dB	(8)_____		±0.28 dB
	Peak-to-Peak Response		(9)_____	3.0 dB	±0.28 dB
	Option UKB ac Coupled Band 0 (10 MHz to 3.0 GHz)				
	Maximum Response		(10)_____	1.5 dB	±0.28 dB
	Minimum Response	–1.5 dB	(11)_____		±0.28 dB
	Peak-to-Peak Response		(12)_____	3.0 dB	±0.28 dB
	Option UKB ac Coupled Band 0A (800 MHz to 1.0 GHz) (serial number US39440871 or greater)				
	Maximum Response		(13)_____	1.5 dB	±0.28 dB
	Minimum Response	–1.5 dB	(14)_____		±0.28 dB
	Peak-to-Peak Response		(15)_____	3.0 dB	±0.28 dB

ManualsPlus.com

Table 3-12 Agilent E4407B Performance Verification Test Record

Agilent Technologies

Model E4407B **Report No.** _____

Serial No. _____ **Date** _____

Test Description	Minimum	Results Measured	Maximum	Measurement Uncertainty
Option UKB ac Coupled Band 0B (1.7 GHz to 2.0 GHz) (serial number US39440871 or greater)				
Maximum Response		(16)_____	1.5 dB	±0.28 dB
Minimum Response	–1.5 dB	(17)_____		±0.28 dB
Peak-to-Peak Response		(18)_____	3.0 dB	±0.28 dB
0 to 55° C				
Non-Option UKB dc Coupled Band 0 (1 MHz to 3.0 GHz)				
Maximum Response		(1)_____	2.0 dB	±0.28 dB
Minimum Response	–2.0 dB	(2)_____		±0.28 dB
Peak-to-Peak Response		(3)_____	4.0 dB	±0.28 dB
Non-Option UKB dc Coupled Band 0A (800 MHz to 1.0 GHz) (serial number US39440871 or greater)				
Maximum Response		(4)_____	2.0 dB	±0.28 dB
Minimum Response	–2.0 dB	(5)_____		±0.28 dB
Peak-to-Peak Response		(6)_____	4.0 dB	±0.28 dB

ManualsPlus.com

Table 3-12 Agilent E4407B Performance Verification Test Record

Agilent Technologies

Model E4407B **Report No.** _____

Serial No. _____ **Date** _____

Test Description	Minimum	Results Measured	Maximum	Measurement Uncertainty
Non-Option UKB dc Coupled Band 0B (1.7 GHz to 2.0 GHz) (serial number US39440871 or greater)				
Maximum Response		(7)_____	2.0 dB	±0.28 dB
Minimum Response	–2.0 dB	(8)_____		±0.28 dB
Peak-to-Peak Response		(9)_____	4.0 dB	±0.28 dB
Option UKB ac Coupled Band 0 (10 MHz to 3.0 GHz)				
Maximum Response		(10)_____	2.0 dB	±0.28 dB
Minimum Response	–2.0 dB	(11)_____		±0.28 dB
Peak-to-Peak Response		(12)_____	4.0 dB	±0.28 dB
Option UKB ac Coupled Band 0A (800 MHz to 1.0 GHz) (serial number US39440871 or greater)				
Maximum Response		(13)_____	2.0 dB	±0.28 dB
Minimum Response	–2.0 dB	(14)_____		±0.28 dB
Peak-to-Peak Response		(15)_____	4.0 dB	±0.28 dB

ManualsPlus.com

Table 3-12 Agilent E4407B Performance Verification Test Record

Agilent Technologies

Model E4407B **Report No.** _____

Serial No. _____ **Date** _____

	Test Description	Minimum	Results Measured	Maximum	Measurement Uncertainty
	Option UKB ac Coupled Band 0B (1.7 GHz to 2.0 GHz) (serial number US39440871 or greater)				
	Maximum Response		(16)_____	2.0 dB	±0.28 dB
	Minimum Response	–2.0 dB	(17)_____		±0.28 dB
	Peak-to-Peak Response		(18)_____	4.0 dB	±0.28 dB
29.	**Other Input-Related Spurious Responses**				
	Center Freq Input Freq				
	2.0 GHz 2042.8 MHz		(1)_____	–65 dBc	±.891 dB
	2.0 GHz 2642.8 MHz		(2)_____	–65 dBc	±.891 dB
	2.0 GHz 1820.8 MHz		(3)_____	–65 dBc	±.891 dB
	2.0 GHz 278.5 MHz		(4)_____	–65 dBc	±.891 dB
	2.0 GHz 5600.0 MHz		(5)_____	–80 dBc	±.891 dB
	2.0 GHz 6242.8 MHz		(6)_____	–80 dBc	±.891 dB
	4.0 GHz 4042.8 MHz		(7)_____	–65 dBc	±.891 dB
	4.0 GHz 4642.8 MHz		(8)_____	–65 dBc	±.891 dB
	4.0 GHz 3742.9 MHz		(9)_____	–65 dBc	±.891 dB
	4.0 GHz 2242.8 MHz		(10)_____	–80 dBc	±.891 dB
	9.0 GHz 9042.8 MHz		(11)_____	–65 dBc	±.891 dB
	9.0 GHz 9642.8 MHz		(12)_____	–65 dBc	±.891 dB
	9.0 GHz 9342.8 MHz		(13)_____	–65 dBc	±.891 dB
	9.0 GHz 4982.1 MHz		(14)_____	–80 dBc	±.891 dB
	15.0 GHz 15042.8 MHz		(15)_____	–65 dBc	±.891 dB
	15.0 GHz 15642.8 MHz		(16)_____	–65 dBc	±.891 dB

ManualsPlus.com

Table 3-12 Agilent E4407B Performance Verification Test Record

Agilent Technologies					
Model E4407B			**Report No. _____**		
Serial No. _____			**Date _____**		
Test Description		**Minimum**	**Results Measured**	**Maximum**	**Measurement Uncertainty**
	15.0 GHz 18830.35 MHz		(17)_____	–65 dBc	±.891 dB
	15.0 GHz 4151.75 MHz		(18)_____	–80 dBc	±.891 dB
	21.0 GHz 21042.8 MHz		(19)_____	–65 dBc	±.971 dB
	21.0 GHz 21642.8 MHz		(20)_____	–65 dBc	±.971 dB
	21.0 GHz 21342.8 MHz		(21)_____	–65 dBc	±.971 dB
	21.0 GHz 5008.95 MHz		(22)_____	–80 dBc	±.971 dB
32.	**Spurious Responses**				
	300 MHz TOI, 1 kHz RBW	12.5 dBm	(1)_____		±0.93 dB
	300 MHz TOI, 30 Hz RBW (*Option 1DR only)*	12.5 dBm	(2)_____		±0.93 dB
	5 GHz TOI	11 dBm	(3)_____		±0.93 dB
	8 GHz TOI	7.5 dBm	(4)_____		±0.93 dB
	300 MHz SHI	35 dBm	(5)_____		±0.41 dB
	900 MHz SHI	45 dBm	(6)_____		±0.41 dB
	1.55 GHz SHI	75 dBm	(7)_____		±0.41 dB
	3.1 GHz SHI	90 dBm	(8)_____		±0.41 dB
34.	**Gain Compression**				
	Test Frequency				
	53 MHz		(1)_____	1.0 dB	±0.123 dB
	50.004 MHz (*Option 1DR only)*		(2)_____	1.0 dB	±0.123 dB
	1403 MHz		(3)_____	1.0 dB	±0.123 dB
	2503 MHz		(4)_____	1.0 dB	±0.123 dB
	4403 MHz		(5)_____	1.0 dB	±0.123 dB
	7603 MHz		(6)_____	1.0 dB	±0.123 dB

ManualsPlus.com

Table 3-12 Agilent E4407B Performance Verification Test Record

Agilent Technologies					
Model E4407B			**Report No. _____**		
Serial No. _____			**Date _____**		
Test Description		**Minimum**	**Results Measured**	**Maximum**	**Measurement Uncertainty**
	14003 MHz		(7)_____	1.0 dB	±0.123 dB
38.	**Displayed Average Noise Level**	Note: Enter results with preamp on in the appropriate section based upon the ambient temperature when the test was performed.			
	1 kHz RBW, Preamp Off				
	10 MHz to 1 GHz		(1)_____	–116 dBm	±1.23 dB
	1 GHz to 2 GHz		(2)_____	–116 dBm	±1.23 dB
	2 GHz to 3 GHz		(3)_____	–112 dBm	±1.23 dB
	3 GHz to 6 GHz		(4)_____	–112 dBm	±1.23 dB
	6 GHz to 12 GHz		(5)_____	–111 dBm	±1.23 dB
	12 GHz to 22 GHz		(6)_____	–107 dBm	±1.23 dB
	22 GHz to 26.5 GHz		(7)_____	–106 dBm	±1.23 dB
	1kHz RBW, Preamp On, 0 to 55° C				
	10 MHz to 1 GHz		(8)_____	–131 dBm	±1.23 dB
	1 GHz to 2 GHz		(9)_____	–131 dBm	±1.23 dB
	2 GHz to 3 GHz		(10)_____	–133 dBm	±1.23 dB
	10 Hz RBW, Preamp Off				
	10 MHz to 1 GHz		(11)_____	–135 dBm	±1.23 dB
	1 GHz to 2 GHz		(12)_____	–135 dBm	±1.23 dB
	2 GHz to 3 GHz		(13)_____	–131 dBm	±1.23 dB
	3 GHz to 6 GHz		(14)_____	–131 dBm	±1.23 dB
	6 GHz to 12 GHz		(15)_____	–130 dBm	±1.23 dB
	12 GHz to 22 GHz		(16)_____	–126 dBm	±1.23 dB
	22 GHz to 26.5 GHz		(17)_____	–125 dBm	±1.23 dB
	10 Hz RBW, Preamp On, 0 to 55° C				

ManualsPlus.com

Table 3-12 Agilent E4407B Performance Verification Test Record

Agilent Technologies					
Model E4407B			**Report No. _____**		
Serial No. _____			**Date _____**		
Test Description		**Minimum**	**Results Measured**	**Maximum**	**Measurement Uncertainty**
	10 MHz to 1 GHz		(18)_____	–150 dBm	±1.23 dB
	1 GHz to 2 GHz		(19)_____	–150 dBm	±1.23 dB
	2 GHz to 3 GHz		(20)_____	–146 dBm	±1.23 dB
	1kHz RBW, Preamp On, 20 to 30° C				
	10 MHz to 1 GHz		(21)_____	–132 dBm	±1.23 dB
	1 GHz to 2 GHz		(22)_____	–132 dBm	±1.23 dB
	2 GHz to 3 GHz		(23)_____	–130 dBm	±1.23 dB
	10 Hz RBW, Preamp On, 20 to 30° C				
	10 MHz to 1 GHz		(24)_____	–151 dBm	±1.23 dB
	1 GHz to 2 GHz		(25)_____	–151 dBm	±1.23 dB
	2 GHz to 3 GHz		(26)_____	–149 dBm	±1.23 dB
39.	**Residual Responses**				
	150 kHz to 6.7 GHz		(1)_____	–90 dBm	±0.87 dB
40.	**Fast Time Domain Amplitude Accuracy** *(Option AYX only)*				
	Amplitude Error	–0.3%	(1)_____	0.3%	±0.029%
42.	**Tracking Generator Absolute Amplitude and Vernier Accuracy** (*Option 1DN only)*				
	Absolute Amplitude Accuracy	–0.75 dB	(1)_____	0.75 dB	±0.096 dB
	Absolute Vernier Accuracy				
	–2 dB	–0.5 dB	(2)_____	0.5 dB	±0.008 dB
	–3 dB	–0.5 dB	(3)_____	0.5 dB	±0.008 dB

ManualsPlus.com

Table 3-12 Agilent E4407B Performance Verification Test Record

Agilent Technologies

Model E4407B **Report No.** _____

Serial No. _____ **Date** _____

Test Description		Minimum	Results Measured	Maximum	Measurement Uncertainty
	–5 dB	–0.5 dB	(4)_____	0.5 dB	±0.008 dB
	–6 dB	–0.5 dB	(5)_____	0.5 dB	±0.008 dB
	–7 dB	–0.5 dB	(6)_____	0.5 dB	±0.008 dB
	–8 dB	–0.5 dB	(7)_____	0.5 dB	±0.008 dB
	–9 dB	–0.5 dB	(8)_____	0.5 dB	±0.008 dB
	–10 dB	–0.5 dB	(9)_____	0.5 dB	±0.008 dB
	Incremental Vernier Accuracy				
	–2 dB	–0.2 dB	(10)_____	0.2 dB	±0.008 dB
	–3 dB	–0.2 dB	(11)_____	0.2 dB	±0.008 dB
	–5 dB	–0.2 dB	(12)_____	0.2 dB	±0.008 dB
	–6 dB	–0.2 dB	(13)_____	0.2 dB	±0.008 dB
	–7 dB	–0.2 dB	(14)_____	0.2 dB	±0.008 dB
	–8 dB	–0.2 dB	(15)_____	0.2 dB	±0.008 dB
	–9 dB	–0.2 dB	(16)_____	0.2 dB	±0.008 dB
	–10 dB	–0.2 dB	(17)_____	0.2 dB	±0.008 dB
43.	**Tracking Generator Output Level Flatness** (*Option 1DN only*)				
	Positive Level Flatness, <1 MHz		(1)_____	3.0 dB	±0.284 dB
	Negative Level Flatness, <1 MHz	–3.0 dB	(2)_____		±0.284 dB
	Positive Level Flatness, 1 MHz to 10 MHz		(3)_____	3.0 dB	±0.142 dB
	Negative Level Flatness, 1 MHz to 10 MHz	–3.0 dB	(4)_____		±0.142 dB

ManualsPlus.com

Table 3-12 Agilent E4407B Performance Verification Test Record

Agilent Technologies					
Model E4407B			**Report No. _____**		
Serial No. _____			**Date _____**		
Test Description		**Minimum**	**Results Measured**	**Maximum**	**Measurement Uncertainty**
	Positive Level Flatness, >10 MHz to 1.5 GHz		(5)_____	2.0 dB	±0.142 dB
	Negative Level Flatness, >10 MHz to 1.5 GHz	–2.0 dB	(6)_____		±0.142 dB
	Positive Level Flatness, >1.5 GHz		(7)_____	2.0 dB	±0.142 dB
	Negative Level Flatness, >1.5 GHz	–2.0 dB	(8)_____		±0.142 dB
46.	**Tracking Generator Harmonic Spurious Outputs** *(Option 1DN only)*				
	2nd Harmonic, <20 kHz		(1)_____	–15 dBc	±2.6 dB
	2nd Harmonic, ≥20 kHz		(2)_____	–25 dBc	±2.6 dB
	3rd Harmonic, <20 kHz		(3)_____	–15 dBc	±2.6 dB
	3rd Harmonic, ≥20 kHz		(4)_____	–25 dBc	±2.6 dB
48.	**Tracking Generator Non-Harmonic Spurious Outputs** *(Option 1DN only)*				
	Highest Non-Harmonic Spurious Output Amplitude, 9 kHz to 2 GHz		(1)_____	–27 dBc	±2.63 dB
	Highest Non-Harmonic Spurious Output Amplitude, 2 GHz to 3 GHz		(2)_____	–23 dBc	±3.14 dB
49.	**Tracking Generator L.O. Feedthrough** *(Option 1DN only)*				
	9 kHz to 2.9 GHz		(1)_____	–16 dBm	±2.58 dB
	2.9 GHz to 3.0 GHz		(2)_____	–16 dBm	±3.03 dB

ManualsPlus.com

Table 3-12 Agilent E4407B Performance Verification Test Record

Agilent Technologies					
Model E4407B			**Report No. _____**		
Serial No. _____			**Date _____**		
Test Description		**Minimum**	**Results Measured**	**Maximum**	**Measurement Uncertainty**
50.	**Gate Delay and Gate Length Accuracy** *(Option 1D6 only)*				
	Minimum Gate Delay	499.9 ns	(1)_____	1.5001µs	±549 ps
	Maximum Gate Delay	499.9 ns	(2)_____	1.5001µs	±549 ps
	1 µs Gate Length	499.9 ns	(3)_____	1.5001µs	±520 ps
	65 ms Gate Length	64.993ms	(4)_____	65.007ms	±647 ns
51.	**Gate Mode Additional Amplitude Error** *(Option 1D6 only)*				
	Amplitude Error	–0.2 dB	(1)_____	0.2 dB	±0.023 dB
52.	**First LO Output Power Accuracy** *(Option AYZ only)* 20 to 30° C	Note: Enter data in the appropriate section based upon the ambient temperature at which the test was performed.			
	First LO Frequency				
	2.9 GHz	15.5 dBm	(1)_____	17.0 dBm	±0.16 dB
	3.3 GHz	15.5 dBm	(2)_____	17.0 dBm	±0.16 dB
	3.7 GHz	15.5 dBm	(3)_____	17.0 dBm	±0.16 dB
	3.9 GHz	15.5 dBm	(4)_____	17.0 dBm	±0.16 dB
	4.1 GHz	15.5 dBm	(5)_____	17.0 dBm	±0.16 dB
	4.5 GHz	15.5 dBm	(6)_____	17.0 dBm	±0.16 dB
	4.9 GHz	15.5 dBm	(7)_____	17.0 dBm	±0.16 dB
	5.3 GHz	15.5 dBm	(8)_____	17.0 dBm	±0.16 dB
	5.7 GHz	15.5 dBm	(9)_____	17.0 dBm	±0.16 dB
	5.9 GHz	15.5 dBm	(10)_____	17.0 dBm	±0.16 dB
	6.1 GHz	15.5 dBm	(11)_____	17.0 dBm	±0.16 dB
	6.5 GHz	13.0 dBm	(12)_____	17.5 dBm	±0.16 dB

ManualsPlus.com

Table 3-12 Agilent E4407B Performance Verification Test Record

Agilent Technologies					
Model E4407B			**Report No. _____**		
Serial No. _____			**Date _____**		
Test Description		**Minimum**	**Results Measured**	**Maximum**	**Measurement Uncertainty**
	6.9 GHz	13.0 dBm	(13)_____	17.5 dBm	±0.16 dB
	7.1 GHz	13.0 dBm	(14)_____	17.5 dBm	±0.16 dB
	0 to 55° C First LO Frequency				
	2.9 GHz	15.0 dBm	(1)_____	17.5 dBm	±0.16 dB
	3.3 GHz	15.0 dBm	(2)_____	17.5 dBm	±0.16 dB
	3.7 GHz	15.0 dBm	(3)_____	17.5 dBm	±0.16 dB
	3.9 GHz	15.0 dBm	(4)_____	17.5 dBm	±0.16 dB
	4.1 GHz	15.0 dBm	(5)_____	17.5 dBm	±0.16 dB
	4.5 GHz	15.0 dBm	(6)_____	17.5 dBm	±0.16 dB
	4.9 GHz	15.0 dBm	(7)_____	17.5 dBm	±0.16 dB
	5.3 GHz	15.0 dBm	(8)_____	17.5 dBm	±0.16 dB
	5.7 GHz	15.0 dBm	(9)_____	17.5 dBm	±0.16 dB
	5.9 GHz	15.0 dBm	(10)_____	17.5 dBm	±0.16 dB
	6.1 GHz	15.0 dBm	(11)_____	17.5 dBm	±0.16 dB
	6.5 GHz	13.0 dBm	(12)_____	17.5 dBm	±0.16 dB
	6.9 GHz	13.0 dBm	(13)_____	17.5 dBm	±0.16 dB
	7.1 GHz	13.0 dBm	(14)_____	17.5 dBm	±0.16 dB
53.	**IF Input Accuracy** *(Option AYZ only)*	Note: Enter data in the appropriate section below depending upon the ambient temperature at which the test was performed.			
	20 to 30° C				
	IF Input Accuracy	–1.0 dB	(1)_____	1.0 dBm	±0.102 dB
	0 to 50° C				
	IF Input Accuracy	–1.5 dB	(1)_____	1.5 dBm	±0.102 dB

ManualsPlus.com

Table 3-12 Agilent E4407B Performance Verification Test Record

Agilent Technologies					
Model E4407B			**Report No. _____**		
Serial No. _____			**Date _____**		
Test Description		**Minimum**	**Results Measured**	**Maximum**	**Measurement Uncertainty**
58.	**GSM Phase and Frequency Error** *(Option BAH and B7E)*				
	Peak Phase Error	–2.1 Deg	(1)_____	2.1 Deg	0.52 Deg
	RMS Phase Error	–1.1 Deg	(2)_____	1.1 Deg	0.000063 Deg
	Frequency Error	–10 Hz	(3)_____	10 Hz	±0.006 Hz
59.	**Comms Absolute Power Accuracy** *(Options BAC or BAH)*				
	20 to 30° C				
	cdmaOne Channel Power Accuracy *(Option BAC only)*				
	Cellular Band Input Amplitude				
	15 dBm	–0.95 dB	(1)_____	0.95 dB	±0.173 dB
	–5 dBm	–0.95 dB	(2)_____	0.95 dB	±0.161 dB
	–25 dBm	–0.84 dB	(3)_____	0.84 dB	±0.161 dB
	–45 dBm	–0.87 dB	(4)_____	0.87 dB	±0.152 dB
	–55 dBm	–0.95 dB	(5)_____	0.95 dB	±0.152 dB
	–70 dBm	–1.07 dB	(6)_____	1.07 dB	±0.161 dB
	PCS Band Input Amplitude				
	15 dBm	–0.93 dB	(7)_____	0.93 dB	±0.173 dB
	–5 dBm	–0.93 dB	(8)_____	0.93 dB	±0.161 dB
	–25 dBm	–0.78 dB	(9)_____	0.78 dB	±0.161 dB
	–45 dBm	–0.77 dB	(10)_____	0.77 dB	±0.152 dB
	–55 dBm	–0.85 dB	(11)_____	0.85 dB	±0.152 dB
	–70 dBm	–0.97 dB	(12)_____	0.97 dB	±0.161 dB

ManualsPlus.com

Table 3-12 Agilent E4407B Performance Verification Test Record

Agilent Technologies					
Model E4407B			**Report No. _____**		
Serial No. _____			**Date _____**		
Test Description		**Minimum**	**Results Measured**	**Maximum**	**Measurement Uncertainty**
	GSM Transmit Power Accuracy *(Option BAH only)*				
	GSM Band Input Amplitude				
	15 dBm	–0.94 dB	(13)_____	0.94 dB	±0.173 dB
	–20 dBm	–0.94 dB	(14)_____	0.94 dB	±0.161 dB
	–30 dBm	–0.80 dB	(15)_____	0.80 dB	±0.156 dB
	–40 dBm	–0.83 dB	(16)_____	0.83 dB	±0.161 dB
	–50 dBm	–0.99 dB	(17)_____	0.99 dB	±0.152 dB
	–60 dBm	–1.13 dB	(18)_____	1.13 dB	±0.161 dB
	DCS and PCS Bands Input Amplitude				
	15 dBm	–0.92 dB	(19)_____	0.92 dB	±0.173 dB
	–20 dBm	–0.92 dB	(20)_____	0.92 dB	±0.161 dB
	–30 dBm	–0.74 dB	(21)_____	0.74 dB	±0.156 dB
	–40 dBm	–0.79 dB	(22)_____	0.79 dB	±0.161 dB
	–50 dBm	–0.95 dB	(23)_____	0.95 dB	±0.152 dB
	–60 dBm	–1.09 dB	(24)_____	1.09 dB	±0.161 dB
	cdmaOne Receive Channel Power, Preamp Off *(Option BAC only)*				
	Cellular Band Input Amplitude				
	–40 dBm	–1.56 dB	(25)_____	1.56 dB	±0.161 dB
	–60 dBm	–1.56 dB	(26)_____	1.56 dB	±0.161 dB
	–70 dBm	–1.56 dB	(27)_____	1.56 dB	±0.161 dB
	–80 dBm	–1.56 dB	(28)_____	1.56 dB	±0.161 dB

ManualsPlus.com

Table 3-12 Agilent E4407B Performance Verification Test Record

Agilent Technologies

Model E4407B **Report No.** _____

Serial No. _____ **Date** _____

Test Description	Minimum	Results Measured	Maximum	Measurement Uncertainty
–85 dBm	–1.56 dB	(29)_____	1.56 dB	±0.152 dB
PCS Band Input Amplitude				
–40 dBm	–1.45 dB	(30)_____	1.45 dB	±0.161 dB
–60 dBm	–1.45 dB	(31)_____	1.45 dB	±0.161 dB
–70 dBm	–1.45 dB	(32)_____	1.45 dB	±0.161 dB
–80 dBm	–1.45 dB	(33)_____	1.45 dB	±0.161 dB
–85 dBm	–1.45 dB	(34)_____	1.45 dB	±0.152 dB
cdmaOne Receive Channel Power, Preamp On *(Option BAC only)*				
Cellular Band Input Amplitude				
–40 dBm	–2.15 dB	(35)_____	2.15 dB	±0.161 dB
–60 dBm	–2.15 dB	(36)_____	2.15 dB	±0.161 dB
–70 dBm	–2.15 dB	(37)_____	2.15 dB	±0.161 dB
–80 dBm	–2.15 dB	(38)_____	2.15 dB	±0.161 dB
–90 dBm	–2.95 dB	(39)_____	2.95 dB	±0.161 dB
–100 dBm	–2.95 dB	(40)_____	2.95 dB	±0.161 dB
PCS Band Input Amplitude				
–40 dBm	–2.15 dB	(41)_____	2.15 dB	±0.161 dB
–60 dBm	–2.15 dB	(42)_____	2.15 dB	±0.161 dB
–70 dBm	–2.15 dB	(43)_____	2.15 dB	±0.161 dB
–80 dBm	–2.15 dB	(44)_____	2.15 dB	±0.161 dB
–90 dBm	–2.95 dB	(45)_____	2.95 dB	±0.161 dB
–100 dBm	–2.95 dB	(46)_____	2.95 dB	±0.161 dB

ManualsPlus.com

Agilent E4408B Performance Verification Test Record

Tests for the Agilent E4408B only are included in this test record, therefore not all test numbers are included.

Table 3-13 Agilent E4408B Performance Verification Test Record

Agilent Technologies

Address: _____ Report No. _____

_____ Date _____

_____

Model E4408B

Serial No. _____ Ambient temperature _____° C

Options _____ Relative humidity_____%

Firmware Revision _____ Power mains line frequency _____ Hz (nominal)

Customer _____ Tested by _____

Test Equipment Used:

Description	Model No.	Trace No.	Cal Due Date
Synthesized Signal Generator	_____	_____	_____
Synthesized Sweeper #1	_____	_____	_____
Synthesized Sweeper #2	_____	_____	_____
Function Generator	_____	_____	_____
Power Meter, Dual-Channel	_____	_____	_____
RF Power Sensor #1	_____	_____	_____
RF Power Sensor #2	_____	_____	_____
Microwave Power Sensor	_____	_____	_____
Low-Power Power Sensor	_____	_____	_____
Digital Multimeter	_____	_____	_____
Universal Counter	_____	_____	_____
Frequency Standard	_____	_____	_____
Power Splitter	_____	_____	_____
50 Ω Termination	_____	_____	_____

ManualsPlus.com

Table 3-13 Agilent E4408B Performance Verification Test Record

1 dB Step Attenuator	_____	_____	_____
10 dB Step Attenuator	_____	_____	_____
Microwave Spectrum Analyzer *(Option 1DN only)*	_____	_____	_____
Notes/comments:	_____		

Table 3-14 Agilent E4408B Performance Verification Test Record

Agilent Technologies

Model E4408B **Report No.** _____

Serial No. _____ **Date** _____

Test Description			**Minimum**	**Results Measured**	**Maximum**	**Measurement Uncertainty**
1.	**10 MHz Reference Output Accuracy**					
	Settability		–5.0 Hz	(1)_____	5.0 Hz	±293.3 µHz
4.	**Frequency Readout and Marker Frequency Count Accuracy**					
	Frequency Readout Accuracy					
	Center Freq	Span				
	1500 MHz	20 MHz	1499.83 MHz	(1)_____	1500.17 MHz	±0 Hz
	1500 MHz	10 MHz	1499.91 MHz	(2)_____	1500.09 MHz	±0 Hz
	1500 MHz	1 MHz	1499.991 MHz	(3)_____	1500.009 MHz	±0 Hz
	4000 MHz	20 MHz	3999.83 MHz	(4)_____	4000.17 MHz	±0 Hz
	4000 MHz	10 MHz	3999.91 MHz	(5)_____	4000.09 MHz	±0 Hz
	4000 MHz	1 MHz	3999.991 MHz	(6)_____	4000.009 MHz	±0 Hz
	9000 MHz	20 MHz	8999.83 MHz	(7)_____	9000.17 MHz	±0 Hz
	9000 MHz	10 MHz	8999.91 MHz	(8)_____	9000.09 MHz	±0 Hz
	9000 MHz	1 MHz	8999.991 MHz	(9)_____	9000.009 MHz	±0 Hz

ManualsPlus.com

Table 3-14 Agilent E4408B Performance Verification Test Record

Agilent Technologies

Model E4408B **Report No.** _____

Serial No. _____ **Date** _____

Test Description		Minimum	Results Measured	Maximum	Measurement Uncertainty
16000 MHz	20 MHz	15999.83 MHz	(10)_____	16000.17 MHz	±0 Hz
16000 MHz	10 MHz	15999.91 MHz	(11)_____	16000.09 MHz	±0 Hz
16000 MHz	1 MHz	15999.991 MHz	(12)_____	16000.009 MHz	±0 Hz
21000 MHz	20 MHz	20999.83 MHz	(13)_____	21000.17 MHz	±0 Hz
21000 MHz	10 MHz	20999.91 MHz	(14)_____	21000.09 MHz	±0 Hz
21000 MHz	1 MHz	20999.991 MHz	(15)_____	21000.009 MHz	±0 Hz
Marker Count Accuracy		Note: Enter results in the appropriate section below based upon the firmware revision of the analyzer.			
Firmware Revision Prior to A.03.00					
Center Freq	Span				
1500 MHz	20 MHz	1499.999998 MHz	(16)_____	1500.000002 MHz	±0 Hz
1500 MHz	1 MHz	1499.999998 MHz	(17)_____	1500.000002 MHz	±0 Hz
4000 MHz	20 MHz	3999.999998 MHz	(18)_____	4000.000002 MHz	±0 Hz
4000 MHz	1 MHz	3999.999998 MHz	(19)_____	4000.000002 MHz	±0 Hz
9000 MHz	20 MHz	8999.999997 MHz	(20)_____	9000.000003 MHz	±0 Hz
9000 MHz	1 MHz	8999.999997 MHz	(21)_____	9000.000003 MHz	±0 Hz
16000 MHz	20 MHz	15999.999995 MHz	(22)_____	16000.000005 MHz	±0 Hz

ManualsPlus.com

Table 3-14 Agilent E4408B Performance Verification Test Record

Agilent Technologies

Model E4408B **Report No.** _____

Serial No. _____ **Date** _____

Test Description		Minimum	Results Measured	Maximum	Measurement Uncertainty
	16000 MHz 1 MHz	20999.999995 MHz	(23)_____	21000.000005 MHz	±0 Hz
	21000 MHz 20 MHz	20999.999995 MHz	(24)_____	21000.000005 MHz	±0 Hz
	21000 MHz 1 MHz	20999.999995 MHz	(25)_____	21000.000005 MHz	±0 Hz
	Firmware Revision A.03.00 or later				
	Center Freq Span				
	1500 MHz 20 MHz	1499.999999 MHz	(16)_____	1500.000001 MHz	±0 Hz
	1500 MHz 1 MHz	1499.999999 MHz	(17)_____	1500.000001 MHz	±0 Hz
	4000 MHz 20 MHz	3999.999999 MHz	(18)_____	4000.000001 MHz	±0 Hz
	4000 MHz 1 MHz	3999.999999 MHz	(19)_____	4000.000001 MHz	±0 Hz
	9000 MHz 20 MHz	8999.999999 MHz	(20)_____	9000.000001 MHz	±0 Hz
	9000 MHz 1 MHz	8999.999999 MHz	(21)_____	9000.000001 MHz	±0 Hz
	16000 MHz 20 MHz	15999.999999 MHz	(22)_____	16000.000001 MHz	±0 Hz
	16000 MHz 1 MHz	20999.999999 MHz	(23)_____	21000.000001 MHz	±0 Hz
	21000 MHz 20 MHz	20999.999999 MHz	(24)_____	21000.000001 MHz	±0 Hz
	21000 MHz 1 MHz	20999.999999 MHz	(25)_____	21000.000001 MHz	±0 Hz
6.	**Frequency Span Accuracy**				

ManualsPlus.com

Table 3-14 Agilent E4408B Performance Verification Test Record

Agilent Technologies					
Model E4408B			**Report No. _____**		
Serial No. _____			**Date _____**		
Test Description		**Minimum**	**Results Measured**	**Maximum**	**Measurement Uncertainty**
	Span Start Freq				
	3000 MHz 0 Hz	2370 MHz	(1)_____	2430 MHz	±6.12 MHz
	100 MHz 10 MHz	79 MHz	(2)_____	81 MHz	±204 kHz
	100 kHz 10 MHz	79 kHz	(3)_____	81 kHz	±204 Hz
	100 MHz 800 MHz	79 MHz	(4)_____	81 MHz	±204 kHz
	100 kHz 800 MHz	79 kHz	(5)_____	81 kHz	±204 Hz
	100 MHz 1400 MHz	79 MHz	(6)_____	81 MHz	±204 kHz
	100 kHz 1499 MHz	79 kHz	(7)_____	81 kHz	±204 Hz
7.	**Noise Sidebands**				
	Offset from 1 GHz signal				
	10 kHz		(1)_____	–90 dBc/Hz	±2.44 dB
	20 kHz		(2)_____	–100 dBc/Hz	±2.44 dB
	30 kHz		(3)_____	–106 dBc/Hz	±2.44 dB
9.	**System-Related Sidebands**				
	Offset from 500 MHz signal				
	30 kHz to 230 kHz		(1)_____	–65 dBc	±1.30 dB
	–30 kHz to –230 kHz		(2)_____	–65 dBc	±1.30 dB
10.	**Residual FM**				
	1 kHz Res BW		(1)_____	150 Hz	±21 Hz
11.	**Sweep Time Accuracy**				
	Sweep Time				
	5 ms	–1.0%	(1)_____	±1.0%	±0.16%
	20 ms	–1.0%	(2)_____	±1.0%	±0.16%
	100 ms	–1.0%	(3)_____	±1.0%	±0.16%

ManualsPlus.com

Table 3-14 Agilent E4408B Performance Verification Test Record

Agilent Technologies					
Model E4408B			**Report No. _____**		
Serial No. _____			**Date _____**		
Test Description		**Minimum**	**Results Measured**	**Maximum**	**Measurement Uncertainty**
	1 s	–1.0%	(4)_____	±1.0%	±0.16%
	10 s	–1.0%	(5)_____	±1.0%	±0.16%
12.	**Display Scale Fidelity**				
	Cumulative Log Fidelity, Res BW ≥1 kHz				
	dB from Ref Level				
	–4	–0.34 dB	(1)_____	0.34 dB	±0.082 dB
	–8	–0.38 dB	(2)_____	0.38 dB	±0.078 dB
	–12	–0.42 dB	(3)_____	0.42 dB	±0.075 dB
	–16	–0.46 dB	(4)_____	0.46 dB	±0.073 dB
	–20	–0.50 dB	(5)_____	0.50 dB	±0.078 dB
	–24	–0.54 dB	(6)_____	0.54 dB	±0.074 dB
	–28	–0.58 dB	(7)_____	0.58 dB	±0.073 dB
	–32	–0.62 dB	(8)_____	0.62 dB	±0.077 dB
	–36	–0.66 dB	(9)_____	0.66 dB	±0.075 dB
	–40	–0.70 dB	(10)_____	0.70 dB	±0.081 dB
	–44	–0.74 dB	(11)_____	0.74 dB	±0.077 dB
	–48	–0.78 dB	(12)_____	0.78 dB	±0.076 dB
	–52	–0.82 dB	(13)_____	0.82 dB	±0.080 dB
	–56	–0.86 dB	(14)_____	0.86 dB	±0.078 dB
	–60	–0.90 dB	(15)_____	0.90 dB	±0.084 dB
	–64	–0.94 dB	(16)_____	0.94 dB	±0.081 dB
	–68	–0.98 dB	(17)_____	0.98 dB	±0.080 dB
	–72	–1.02 dB	(18)_____	1.02 dB	±0.084 dB
	–76	–1.06 dB	(19)_____	1.06 dB	±0.083 dB
	–80	–1.10 dB	(20)_____	1.10 dB	±0.089 dB

ManualsPlus.com

Table 3-14 Agilent E4408B Performance Verification Test Record

Agilent Technologies					
Model E4408B			**Report No. _____**		
Serial No. _____			**Date _____**		
Test Description		**Minimum**	**Results Measured**	**Maximum**	**Measurement Uncertainty**
	–84	–1.14 dB	(21)_____	1.14 dB	±0.086 dB
	Incremental Log Fidelity, Res BW ≥1 kHz				
	dB from Ref Level				
	–4	–0.4 dB	(22)_____	0.4 dB	±0.082 dB
	–8	–0.4 dB	(23)_____	0.4 dB	±0.078 dB
	–12	–0.4 dB	(24)_____	0.4 dB	±0.075 dB
	–16	–0.4 dB	(25)_____	0.4 dB	±0.073 dB
	–20	–0.4 dB	(26)_____	0.4 dB	±0.078 dB
	–24	–0.4 dB	(27)_____	0.4 dB	±0.074 dB
	–28	–0.4 dB	(28)_____	0.4 dB	±0.073 dB
	–32	–0.4 dB	(29)_____	0.4 dB	±0.077 dB
	–36	–0.4 dB	(30)_____	0.4 dB	±0.075 dB
	–40	–0.4 dB	(31)_____	0.4 dB	±0.081 dB
	–44	–0.4 dB	(32)_____	0.4 dB	±0.077 dB
	–48	–0.4 dB	(33)_____	0.4 dB	±0.076 dB
	–52	–0.4 dB	(34)_____	0.4 dB	±0.080 dB
	–56	–0.4 dB	(35)_____	0.4 dB	±0.078 dB
	–60	–0.4 dB	(36)_____	0.4 dB	±0.084 dB
	–64	–0.4 dB	(37)_____	0.4 dB	±0.081 dB
	–68	–0.4 dB	(38)_____	0.4 dB	±0.080 dB
	–72	–0.4 dB	(39)_____	0.4 dB	±0.084 dB
	–76	–0.4 dB	(40)_____	0.4 dB	±0.083 dB
	–80	–0.4 dB	(41)_____	0.4 dB	±0.089 dB

ManualsPlus.com

Table 3-14 Agilent E4408B Performance Verification Test Record

Agilent Technologies

Model E4408B **Report No.** _____

Serial No. _____ **Date** _____

Test Description		Minimum	Results Measured	Maximum	Measurement Uncertainty
	Cumulative Log Fidelity, Res BW ≤300 Hz *(Option 1DR only)*				
	dB from Ref Level				
	–4	–0.34 dB	(43)_____	0.34 dB	±0.082 dB
	–8	–0.38 dB	(44)_____	0.38 dB	±0.078 dB
	–12	–0.42 dB	(45)_____	0.42 dB	±0.075 dB
	–16	–0.46 dB	(46)_____	0.46 dB	±0.073 dB
	–20	–0.50 dB	(47)_____	0.50 dB	±0.078 dB
	–24	–0.54 dB	(48)_____	0.54 dB	±0.074 dB
	–28	–0.58 dB	(49)_____	0.58 dB	±0.073 dB
	–32	–0.62 dB	(50)_____	0.62 dB	±0.077 dB
	–36	–0.66 dB	(51)_____	0.66 dB	±0.075 dB
	–40	–0.70 dB	(52)_____	0.70 dB	±0.081 dB
	–44	–0.74 dB	(53)_____	0.74 dB	±0.077 dB
	–48	–0.78 dB	(54)_____	0.78 dB	±0.076 dB
	–52	–0.82 dB	(55)_____	0.82 dB	±0.080 dB
	–56	–0.86 dB	(56)_____	0.86 dB	±0.078 dB
	–60	–0.90 dB	(57)_____	0.90 dB	±0.084 dB
	–64	–0.94 dB	(58)_____	0.94 dB	±0.081 dB
	–68	–0.98 dB	(59)_____	0.98 dB	±0.080 dB
	–72	–1.02 dB	(60)_____	1.02 dB	±0.084 dB
	–76	–1.06 dB	(61)_____	1.06 dB	±0.083 dB
	–80	–1.10 dB	(62)_____	1.10 dB	±0.089 dB
	–84	–1.14 dB	(63)_____	1.14 dB	±0.086 dB
	–88	–1.18 dB	(64)_____	1.18 dB	±0.085 dB

ManualsPlus.com

Table 3-14 Agilent E4408B Performance Verification Test Record

Agilent Technologies				
Model E4408B		**Report No.** _____		
Serial No. _____		**Date** _____		
Test Description	**Minimum**	**Results Measured**	**Maximum**	**Measurement Uncertainty**
–92	–1.22 dB	(65)_____	1.22 dB	±0.100 dB
–96	–1.26 dB	(66)_____	1.26 dB	±0.099 dB
–98	–1.28 dB	(67)_____	1.28 dB	±0.098 dB
Incremental Log Fidelity, Res BW ≤300 Hz *(Option 1DR only)*				
dB from Ref Level				
–4	–0.4 dB	(68)_____	0.4 dB	±0.082 dB
–8	–0.4 dB	(69)_____	0.4 dB	±0.078 dB
–12	–0.4 dB	(70)_____	0.4 dB	±0.075 dB
–16	–0.4 dB	(71)_____	0.4 dB	±0.073 dB
–20	–0.4 dB	(72)_____	0.4 dB	±0.078 dB
–24	–0.4 dB	(73)_____	0.4 dB	±0.074 dB
–28	–0.4 dB	(74)_____	0.4 dB	±0.073 dB
–32	–0.4 dB	(75)_____	0.4 dB	±0.077 dB
–36	–0.4 dB	(76)_____	0.4 dB	±0.075 dB
–40	–0.4 dB	(77)_____	0.4 dB	±0.081 dB
–44	–0.4 dB	(78)_____	0.4 dB	±0.077 dB
–48	–0.4 dB	(79)_____	0.4 dB	±0.076 dB
–52	–0.4 dB	(80)_____	0.4 dB	±0.080 dB
–56	–0.4 dB	(81)_____	0.4 dB	±0.078 dB
–60	–0.4 dB	(82)_____	0.4 dB	±0.084 dB
–64	–0.4 dB	(83)_____	0.4 dB	±0.081 dB
–68	–0.4 dB	(84)_____	0.4 dB	±0.080 dB
–72	–0.4 dB	(85)_____	0.4 dB	±0.084 dB
–76	–0.4 dB	(86)_____	0.4 dB	±0.083 dB

ManualsPlus.com

Table 3-14 Agilent E4408B Performance Verification Test Record

Agilent Technologies

Model E4408B **Report No.** _____

Serial No. _____ **Date** _____

Test Description	Minimum	Results Measured	Maximum	Measurement Uncertainty
–80	–0.4 dB	(87)_____	0.4 dB	±0.089 dB
Linear Fidelity, Res BW ≥1 kHz				
dB from Ref Level				
–4	–2.0%	(93)_____	2.0%	±0.064%
–8	–2.0%	(94)_____	2.0%	±0.064%
–12	–2.0%	(95)_____	2.0%	±0.064%
–16	–2.0%	(96)_____	2.0%	±0.064%
–20	–2.0%	(97)_____	2.0%	±0.063%
Linear Fidelity, Res BW ≤300 Hz *(Option 1DR only)*				
dB from Ref Level				
–4	–2.0%	(98)_____	2.0%	±0.064%
–8	–2.0%	(99)_____	2.0%	±0.064%
–12	–2.0%	(100)_____	2.0%	±0.064%
–16	–2.0%	(101)_____	2.0%	±0.064%
–20	–2.0%	(102)_____	2.0%	±0.063%
Zero Span, Res BW ≤300 Hz *(Option 1DR only)*				
dB from Ref Level				
–4	–0.36 dB	(103)_____	0.36 dB	±0.082 dB
–8	–0.42 dB	(104)_____	0.42 dB	±0.078 dB
–12	–0.48 dB	(105)_____	0.48 dB	±0.075 dB
–16	–0.54 dB	(106)_____	0.54 dB	±0.073 dB
–20	–0.60 dB	(107)_____	0.60 dB	±0.078 dB
–24	–0.66 dB	(108)_____	0.66 dB	±0.074 dB

ManualsPlus.com

Table 3-14 Agilent E4408B Performance Verification Test Record

Agilent Technologies					
Model E4408B			**Report No. _____**		
Serial No. _____			**Date _____**		
Test Description		**Minimum**	**Results Measured**	**Maximum**	**Measurement Uncertainty**
	–28	–0.72 dB	(109)_____	0.72 dB	±0.073 dB
	–32	–0.78 dB	(110)_____	0.78 dB	±0.077 dB
	–36	–0.84 dB	(111)_____	0.84 dB	±0.075 dB
	–40	–0.90 dB	(112)_____	0.90 dB	±0.081 dB
	–44	–0.96 dB	(113)_____	0.96 dB	±0.077 dB
	–48	–1.02 dB	(114)_____	1.02 dB	±0.076 dB
	–52	–1.08 dB	(115)_____	1.08 dB	±0.080 dB
	–56	–1.14 dB	(116)_____	1.14 dB	±0.078 dB
	–60	–1.20 dB	(117)_____	1.20 dB	±0.084 dB
	–64	–1.5 dB	(118)_____	1.5 dB	±0.081 dB
	–68	–1.5 dB	(119)_____	1.5 dB	±0.080 dB
	–70	–1.5 dB	(120)_____	1.5 dB	±0.084 dB
13.	**Input Attenuation Switching Uncertainty**				
	Input Attenuation Setting				
	0 dB	–0.3 dB	(1)_____	0.3 dB	±0.101 dB
	5 dB	–0.3 dB	(2)_____	0.3 dB	±0.104 dB
	15 dB	–0.3 dB	(3)_____	0.3 dB	±0.102 dB
	20 dB	–0.3 dB	(4)_____	0.3 dB	±0.098 dB
	25 dB	–0.35 dB	(5)_____	0.35 dB	±0.098 dB
	30 dB	–0.40 dB	(6)_____	0.40 dB	±0.096 dB
	35 dB	–0.45 dB	(7)_____	0.45 dB	±0.099 dB
	40 dB	–0.50 dB	(8)_____	0.50 dB	±0.096 dB
	45 dB	–0.55 dB	(9)_____	0.55 dB	±0.099 dB
	50 dB	–0.60 dB	(10)_____	0.60 dB	±0.095 dB
	55 dB	–0.65 dB	(11)_____	0.65 dB	±0.099 dB

ManualsPlus.com

Table 3-14 Agilent E4408B Performance Verification Test Record

Agilent Technologies					
Model E4408B			**Report No. _____**		
Serial No. _____			**Date _____**		
Test Description		**Minimum**	**Results Measured**	**Maximum**	**Measurement Uncertainty**
	60 dB	–0.70 dB	(12)_____	0.70 dB	±0.100 dB
	65 dB	–0.75 dB	(13)_____	0.75 dB	±0.111 dB
15.	**Reference Level Accuracy**				
	Log				
	Reference Level				
	–10 dBm	–0.3 dB	(1)_____	0.3 dB	±0.091 dB
	0 dBm	–0.3 dB	(2)_____	0.3 dB	±0.100 dB
	–30 dBm	–0.3 dB	(3)_____	0.3 dB	±0.092 dB
	–40 dBm	–0.3 dB	(4)_____	0.3 dB	±0.094 dB
	–50 dBm	–0.5 dB	(5)_____	0.5 dB	±0.095 dB
	–60 dBm	–0.5 dB	(6)_____	0.5 dB	±0.097 dB
	–70 dBm	–0.5 dB	(7)_____	0.5 dB	±0.099 dB
	–80 dBm	–0.7 dB	(8)_____	0.7 dB	±0.101 dB
	Linear				
	Reference Level				
	–10 dBm	–0.3 dB	(9)_____	0.3 dB	±0.091 dB
	0 dBm	–0.3 dB	(10)_____	0.3 dB	±0.100 dB
	–30 dBm	–0.3 dB	(11)_____	0.3 dB	±0.092 dB
	–40 dBm	–0.3 dB	(12)_____	0.3 dB	±0.094 dB
	–50 dBm	–0.5 dB	(13)_____	0.5 dB	±0.095 dB
	–60 dBm	–0.5 dB	(14)_____	0.5 dB	±0.097 dB
	–70 dBm	–0.5 dB	(15)_____	0.5 dB	±0.099 dB
	–80 dBm	–0.7 dB	(16)_____	0.7 dB	±0.101 dB
16.	**Resolution Bandwidth Switching Uncertainty**				

ManualsPlus.com

Table 3-14 Agilent E4408B Performance Verification Test Record

Agilent Technologies

Model E4408B **Report No.** _____

Serial No. _____ **Date** _____

	Test Description	Minimum	Results Measured	Maximum	Measurement Uncertainty
	Resolution Bandwidth				
	3 kHz	–0.3 dB	(1)_____	0.3 dB	±0.048 dB
	9 kHz	–0.3 dB	(2)_____	0.3 dB	±0.048 dB
	10 kHz	–0.3 dB	(3)_____	0.3 dB	±0.048 dB
	30 kHz	–0.3 dB	(4)_____	0.3 dB	±0.048 dB
	100 kHz	–0.3 dB	(5)_____	0.3 dB	±0.048 dB
	120 kHz	–0.3 dB	(6)_____	0.3 dB	±0.048 dB
	300 kHz	–0.3 dB	(7)_____	0.3 dB	±0.048 dB
	1 MHz	–0.3 dB	(8)_____	0.3 dB	±0.048 dB
	3 MHz	–0.3 dB	(9)_____	0.3 dB	±0.048 dB
	5 MHz	–0.6 dB	(10)_____	0.6 dB	±0.076 dB
	300 Hz *(Option 1DR only)*	–3.0 dB	(11)_____	0.3 dB	±0.048 dB
	200 Hz *(Option 1DR only)*	–3.0 dB	(12)_____	0.3 dB	±0.048 dB
	100 Hz *(Option 1DR only)*	–3.0 dB	(13)_____	0.3 dB	±0.048 dB
18.	**Absolute Amplitude Accuracy (Reference Settings)**				
	Log, Preamp Off	–0.4 dB	(1)_____	0.4 dB	±0.09 dB
	Lin, Preamp Off	–0.4 dB	(2)_____	0.4 dB	±0.09 dB
20.	**Overall Absolute Amplitude Accuracy**				
	0 dBm Reference Level				
	0 dBm input	–0.6 dB	(1)_____	0.6 dB	±0.234 dB
	–10 dBm input	–0.6 dB	(2)_____	0.6 dB	±0.115 dB
	–20 dBm input	–0.6 dB	(3)_____	0.6 dB	±0.110 dB
	–30 dBm input	–0.6 dB	(4)_____	0.6 dB	±0.109 dB

ManualsPlus.com

Table 3-14 Agilent E4408B Performance Verification Test Record

Agilent Technologies

Model E4408B **Report No.** _____

Serial No. _____ **Date** _____

Test Description		Minimum	Results Measured	Maximum	Measurement Uncertainty
	–40 dBm input	–0.6 dB	(5)_____	0.6 dB	±0.109 dB
	–50 dBm input	–0.6 dB	(6)_____	0.6 dB	±0.109 dB
	–20 dBm Reference Level				
	–20 dBm input	–0.6 dB	(7)_____	0.6 dB	±0.109 dB
	–30 dBm input	–0.6 dB	(8)_____	0.6 dB	±0.109 dB
	–40 dBm input	–0.6 dB	(9)_____	0.6 dB	±0.109 dB
	–50 dBm input	–0.6 dB	(10)_____	0.6 dB	±0.109 dB
	–40 dBm Reference Level				
	–40 dBm input	–0.6 dB	(11)_____	0.6 dB	±0.087 dB
	–50 dBm input	–0.6 dB	(12)_____	0.6 dB	±0.087 dB
	–50 dBm Reference Level				
	–50 dBm input	–0.6 dB	(13)_____	0.6 dB	±0.087 dB
21.	**Resolution Bandwidth Accuracy**				
	Resolution Bandwidth				
	5 MHz	3.5 MHz	(1)_____	6.5 MHz	±110 kHz
	3 MHz	2.55 MHz	(2)_____	3.45 MHz	±66 kHz
	1 MHz	0.85 MHz	(3)_____	1.15 MHz	±22 kHz
	300 kHz	255 kHz	(4)_____	345 kHz	±6.6 kHz
	100 kHz	85 kHz	(5)_____	115 kHz	±2.2 kHz
	30 kHz	25.5 kHz	(6)_____	34.5 kHz	±660 Hz
	10 kHz	8.5 kHz	(7)_____	11.5 kHz	±220 Hz
	3 kHz	2.55 kHz	(8)_____	3.45 kHz	±66 Hz
	1 kHz	850 Hz	(9)_____	1.15 kHz	±22 Hz
	120 kHz	96 kHz	(10)_____	144 kHz	±2.17 kHz
	9 kHz	7.2 kHz	(11)_____	10.8 kHz	±163 Hz

ManualsPlus.com

Table 3-14 Agilent E4408B Performance Verification Test Record

Agilent Technologies					
Model E4408B			**Report No. _____**		
Serial No. _____			**Date _____**		
Test Description		**Minimum**	**Results Measured**	**Maximum**	**Measurement Uncertainty**
24.	**Frequency Response**	Note: Enter data in the appropriate section below depending upon the ambient temperature at which the test was performed and installed options.			
	20 to 30° C				
	Band 0 (9 kHz to 3.0 GHz)				
	Maximum Response		(1)_____	0.50 dB	±0.19 dB
	Minimum Response	–0.50 dB	(2)_____		±0.19 dB
	Peak-to-Peak Response		(3)_____	1.0 dB	±0.19 dB
	Band 1 (3.0 GHz to 6.7 GHz)				
	Maximum Response		(10)_____	1.5 dB	±0.39 dB
	Minimum Response	–1.5 dB	(11)_____		±0.39 dB
	Peak-to-Peak Response		(12)_____	2.6 dB	±0.39 dB
	Band 2 (6.7 GHz to 13.2 GHz)				
	Maximum Response		(13)_____	2.0 dB	±0.40 dB
	Minimum Response	–2.0 dB	(14)_____		±0.40 dB
	Peak-to-Peak Response		(15)_____	3.6 dB	±0.40 dB
	Band 3 (13.2 GHz to 26.5 GHz)				
	Maximum Response		(16)_____	2.0 dB	±0.59 dB
	Minimum Response	–2.0 dB	(17)_____		±0.59 dB
	Peak-to-Peak Response		(18)_____	3.6 dB	±0.59 dB

ManualsPlus.com

Table 3-14 Agilent E4408B Performance Verification Test Record

Agilent Technologies					
Model E4408B			**Report No. _____**		
Serial No. _____			**Date _____**		
Test Description		**Minimum**	**Results Measured**	**Maximum**	**Measurement Uncertainty**
	0 to 55° C				
	Band 0 (9 kHz to 3.0 GHz				
	Maximum Response		(1)_____	1.0 dB	±0.19 dB
	Minimum Response	–1.0 dB	(2)_____		±0.19 dB
	Peak-to-Peak Response		(3)_____	2.0 dB	±0.19 dB
	Band 1 (3.0 GHz to 6.7 GHz)				
	Maximum Response		(10)_____	2.5 dB	±0.39 dB
	Minimum Response	–2.5 dB	(11)_____		±0.39 dB
	Peak-to-Peak Response		(12)_____	3.0 dB	±0.39 dB
	Band 2 (6.7 GHz to 13.2 GHz)				
	Maximum Response		(13)_____	3.0 dB	±0.40 dB
	Minimum Response	–3.0 dB	(14)_____		±0.40 dB
	Peak-to-Peak Response		(15)_____	4.0 dB	±0.40 dB
	Band 3 (13.2 GHz to 26.5 GHz)				
	Maximum Response		(16)_____	3.0 dB	±0.59 dB
	Minimum Response	–3.0 dB	(17)_____		±0.59 dB
	Peak-to-Peak Response		(18)_____	4.0 dB	±0.59 dB
29.	**Other Input-Related Spurious Responses** Center Freq Input Freq				

ManualsPlus.com

Table 3-14 Agilent E4408B Performance Verification Test Record

Agilent Technologies					
Model E4408B			**Report No. _____**		
Serial No. _____			**Date _____**		
Test Description		**Minimum**	**Results Measured**	**Maximum**	**Measurement Uncertainty**
	2.0 GHz 2042.8 MHz		(1)_____	–65 dBc	±.891 dB
	2.0 GHz 2642.8 MHz		(2)_____	–65 dBc	±.891 dB
	2.0 GHz 1820.8 MHz		(3)_____	–65 dBc	±.891 dB
	2.0 GHz 278.5 MHz		(4)_____	–65 dBc	±.891 dB
	2.0 GHz 5600.0 MHz		(5)_____	–80 dBc	±.891 dB
	2.0 GHz 6242.8 MHz		(6)_____	–80 dBc	±.891 dB
	4.0 GHz 4042.8 MHz		(7)_____	–65 dBc	±.891 dB
	4.0 GHz 4642.8 MHz		(8)_____	–65 dBc	±.891 dB
	4.0 GHz 3742.9 MHz		(9)_____	–65 dBc	±.891 dB
	4.0 GHz 2242.8 MHz		(10)_____	–80 dBc	±.891 dB
	9.0 GHz 9042.8 MHz		(11)_____	–65 dBc	±.891 dB
	9.0 GHz 9642.8 MHz		(12)_____	–65 dBc	±.891 dB
	9.0 GHz 9342.8 MHz		(13)_____	–65 dBc	±.891 dB
	9.0 GHz 4982.1 MHz		(14)_____	–80 dBc	±.891 dB
	15.0 GHz 15042.8 MHz		(15)_____	–65 dBc	±.891 dB
	15.0 GHz 15642.8 MHz		(16)_____	–65 dBc	±.891 dB
	15.0 GHz 18830.35 MHz		(17)_____	–65 dBc	±.891 dB
	15.0 GHz 4151.75 MHz		(18)_____	–80 dBc	±.891 dB
	21.0 GHz 21042.8 MHz		(19)_____	–65 dBc	±.971 dB
	21.0 GHz 21642.8 MHz		(20)_____	–65 dBc	±.971 dB
	21.0 GHz 21342.8 MHz		(21)_____	–65 dBc	±.971 dB
	21.0 GHz 5008.95 MHz		(22)_____	–80 dBc	±.971 dB
32.	**Spurious Responses**	Note: Test Record Entry 2 does not apply to the Agilent E4408B.			
	300 MHz TOI	7.5 dBm	(1)_____		±0.93 dB
	5 GHz TOI	7.5 dBm	(3)_____		±0.93 dB

ManualsPlus.com

Table 3-14 Agilent E4408B Performance Verification Test Record

Agilent Technologies					
Model E4408B			**Report No. _____**		
Serial No. _____			**Date _____**		
Test Description		**Minimum**	**Results Measured**	**Maximum**	**Measurement Uncertainty**
	8 GHz TOI	5 dBm	(4)_____		±0.93 dB
	300 MHz SHI	30 dBm	(5)_____		±0.41 dB
	900 MHz SHI	40 dBm	(6)_____		±0.41 dB
	1.55 GHz SHI	70 dBm	(7)_____		±0.41 dB
	3.1 GHz SHI	85 dBm	(8)_____		±0.41 dB
34.	**Gain Compression**	Note: Test Record Entry 2 does not apply to the Agilent E4408B.			
	Test Frequency				
	53 MHz		(1)_____	1.0 dB	±0.123 dB
	1403 MHz		(3)_____	1.0 dB	±0.123 dB
	2503 MHz		(4)_____	1.0 dB	±0.123 dB
	4403 MHz		(5)_____	1.0 dB	±0.123 dB
	7603 MHz		(6)_____	1.0 dB	±0.123 dB
	14003 MHz		(7)_____	1.0 dB	±0.123 dB
38.	**Displayed Average Noise Level**				
	1 kHz RBW				
	10 MHz to 1 GHz		(1)_____	–116 dBm	±1.23 dB
	1 GHz to 2 GHz		(2)_____	–115 dBm	±1.23 dB
	2 GHz to 3 GHz		(3)_____	–112 dBm	±1.23 dB
	3 GHz to 6 GHz		(4)_____	–112 dBm	±1.23 dB
	6 GHz to 12 GHz		(5)_____	–110 dBm	±1.23 dB
	12 GHz to 22 GHz		(6)_____	–107 dBm	±1.23 dB
	22 GHz to 26.5 GHz		(7)_____	–101 dBm	±1.23 dB
	100 Hz RBW				
	10 MHz to 1 GHz		(11)_____	–124 dBm	±1.23 dB
	1 GHz to 2 GHz		(12)_____	–123 dBm	±1.23 dB

ManualsPlus.com

Table 3-14 Agilent E4408B Performance Verification Test Record

Agilent Technologies					
Model E4408B			**Report No.** _____		
Serial No. _____			**Date** _____		
Test Description		**Minimum**	**Results Measured**	**Maximum**	**Measurement Uncertainty**
	2 GHz to 3 GHz		(13)_____	–120 dBm	±1.23 dB
	3 GHz to 6 GHz		(14)_____	–120 dBm	±1.23 dB
	6 GHz to 12 GHz		(15)_____	–118 dBm	±1.23 dB
	12 GHz to 22 GHz		(16)_____	–115 dBm	±1.23 dB
	22 GHz to 26.5 GHz		(17)_____	–109 dBm	±1.23 dB
39.	**Residual Responses**				
	150 kHz to 6.7 GHz		(1)_____	–90 dBm	±0.87 dB
42.	**Tracking Generator Absolute Amplitude and Vernier Accuracy** *(Option 1DN only)*				
	Absolute Amplitude Accuracy	–0.75 dB	(1)_____	0.75 dB	±0.096 dB
	Absolute Vernier Accuracy				
	–2 dB	–0.5 dB	(2)_____	0.5 dB	±0.008 dB
	–3 dB	–0.5 dB	(3)_____	0.5 dB	±0.008 dB
	–5 dB	–0.5 dB	(4)_____	0.5 dB	±0.008 dB
	–6 dB	–0.5 dB	(5)_____	0.5 dB	±0.008 dB
	–7 dB	–0.5 dB	(6)_____	0.5 dB	±0.008 dB
	–8 dB	–0.5 dB	(7)_____	0.5 dB	±0.008 dB
	–9 dB	–0.5 dB	(8)_____	0.5 dB	±0.008 dB
	–10 dB	–0.5 dB	(9)_____	0.5 dB	±0.008 dB
	Incremental Vernier Accuracy				
	–2 dB	–0.2 dB	(10)_____	0.2 dB	±0.008 dB
	–3 dB	–0.2 dB	(11)_____	0.2 dB	±0.008 dB
	–5 dB	–0.2 dB	(12)_____	0.2 dB	±0.008 dB

ManualsPlus.com

Table 3-14 Agilent E4408B Performance Verification Test Record

Agilent Technologies

Model E4408B **Report No.** _____

Serial No. _____ **Date** _____

Test Description		Minimum	Results Measured	Maximum	Measurement Uncertainty
	–6 dB	–0.2 dB	(13)_____	0.2 dB	±0.008 dB
	–7 dB	–0.2 dB	(14)_____	0.2 dB	±0.008 dB
	–8 dB	–0.2 dB	(15)_____	0.2 dB	±0.008 dB
	–9 dB	–0.2 dB	(16)_____	0.2 dB	±0.008 dB
	–10 dB	–0.2 dB	(17)_____	0.2 dB	±0.008 dB
44.	**Tracking Generator Level Flatness** *(Option 1DN only)*				
	Positive Level Flatness, <1 MHz		(1)_____	3.0 dB	±0.284 dB
	Negative Level Flatness, <1 MHz	–3.0 dB	(2)_____		±0.284 dB
	Positive Level Flatness, 1 MHz to 10 MHz		(3)_____	3.0 dB	±0.142 dB
	Negative Level Flatness, 1 MHz to 10 MHz	–3.0 dB	(4)_____		±0.142 dB
	Positive Level Flatness, >10 MHz to 1.5 GHz		(5)_____	2.0 dB	±0.142 dB
	Negative Level Flatness, >10 MHz to 1.5 GHz	–2.0 dB	(6)_____		±0.142 dB
	Positive Level Flatness, >1.5 GHz		(7)_____	2.0 dB	±0.142 dB
	Negative Level Flatness, >1.5 GHz	–2.0 dB	(8)_____		±0.142 dB
46.	**Tracking Generator Harmonic Spurious Outputs** *(Option 1DN only)*				
	2nd Harmonic, <20 kHz		(1)_____	–15 dBc	±2.6 dB
	2nd Harmonic, ≥20 kHz		(2)_____	–25 dBc	±2.6 dB

ManualsPlus.com

Table 3-14 Agilent E4408B Performance Verification Test Record

Agilent Technologies					
Model E4408B			**Report No. _____**		
Serial No. _____			**Date _____**		
Test Description		**Minimum**	**Results Measured**	**Maximum**	**Measurement Uncertainty**
	3rd Harmonic, <20 kHz		(3)_____	–15 dBc	±2.6 dB
	3rd Harmonic, ≥20 kHz		(4)_____	–25 dBc	±2.6 dB
48.	**Tracking Generator Non-Harmonic Spurious Outputs** *(Option 1DN only)*				
	Highest Non-Harmonic Spurious Output Amplitude, 9 kHz to 2 GHz		(1)_____	–27 dBc	±2.63 dB
	Highest Non-Harmonic Spurious Output Amplitude, 2 GHz to 3 GHz		(2)_____	–23 dBc	±3.14 dB
49.	**Tracking Generator L.O. Feedthrough** *(Option 1DN only)*				
	9 kHz to 2.9 GHz		(1)_____	–16 dBm	±2.58 dB
	2.9 GHz to 3.0 GHz		(2)_____	–16 dBm	±3.03 dB

ManualsPlus.com

Agilent E4411B Performance Verification Test Record

Tests for the Agilent E4411B only are included in this test record, therefore not all test numbers are included.

Table 3-15 Agilent E4411B Performance Verification Test Record

Agilent Technologies

Address: _____ Report No. _____

_____ Date _____

_____

Model E4411B

Serial No. _____ Ambient temperature _____° C

Options _____ Relative humidity_____%

Firmware Revision _____ Power mains line frequency _____ Hz (nominal)

Customer _____ Tested by _____

Test Equipment Used:

Description	Model No.	Trace No.	Cal Due Date
Synthesized Signal Generator	_____	_____	_____
Synthesized Sweeper	_____	_____	_____
Function Generator	_____	_____	_____
Power Meter, Dual-Channel	_____	_____	_____
RF Power Sensor #1	_____	_____	_____
RF Power Sensor #2 *50 Ω Input (No Option 1DP)*	_____	_____	_____
Low-Power Power Sensor	_____	_____	_____
75Ω Power Sensor *(Option 1DP only)*	_____	_____	_____
Digital Multimeter	_____	_____	_____
Universal Counter	_____	_____	_____
Frequency Standard	_____	_____	_____
Power Splitter	_____	_____	_____

ManualsPlus.com

Table 3-15 Agilent E4411B Performance Verification Test Record

50Ω Termination	_____	_____	_____
Minimum Loss Pad *(Option 1DP only)*	_____	_____	_____
1 dB Step Attenuator	_____	_____	_____
10 dB Step Attenuator	_____	_____	_____
Microwave Spectrum Analyzer *(Option 1DN or 1DQ only)*	_____	_____	_____
Notes/comments:	_____		

Table 3-16 Agilent E4411B Performance Verification Test Record

Agilent Technologies

Model E4411B **Report No.** _____

Serial No. _____ **Date** _____

Test Description		Minimum	Results Measured	Maximum	Measurement Uncertainty
1.	**10 MHz Reference Output Accuracy**				
	Settability	–5.0 Hz	(1)_____	5.0 Hz	±293.3 µHz
3.	**Frequency Readout and Marker Frequency Count Accuracy**				
	Frequency Readout Accuracy				
	Center Freq Span				
	1490 MHz 20 MHz	1489.83 MHz	(1)_____	1490.17 MHz	±0 Hz
	1490 MHz 10 MHz	1489.91 MHz	(2)_____	1490.09 MHz	±0 Hz
	1490 MHz 1 MHz	1489.991 MHz	(3)_____	1490.009 MHz	±0 Hz
	Marker Count Accuracy				
	Center Freq Span				
	1490 MHz 10 MHz	1489.999998 MHz	(4)_____	1490.000002 MHz	±0 Hz

ManualsPlus.com

Table 3-16 Agilent E4411B Performance Verification Test Record

Agilent Technologies					
Model E4411B			**Report No. _____**		
Serial No. _____			**Date _____**		
Test Description		**Minimum**	**Results Measured**	**Maximum**	**Measurement Uncertainty**
	1490 MHz 1 MHz	1489.999998 MHz	(5)_____	1490.000002 MHz	±0 Hz
5.	**Frequency Span Accuracy**				
	Span Start Freq				
	1500 MHz 0 Hz	1185 MHz	(1)_____	1215 MHz	±3.06 MHz
	100 MHz 10 MHz	79 MHz	(2)_____	81 MHz	±204 kHz
	100 kHz 10 MHz	79 kHz	(3)_____	81 kHz	±204 Hz
	100 MHz 800 MHz	79 MHz	(4)_____	81 MHz	±204 kHz
	100 kHz 800 MHz	79 kHz	(5)_____	81 kHz	±204 Hz
	100 MHz 1400 MHz	79 MHz	(6)_____	81 MHz	±204 kHz
	100 kHz 1499 MHz	79 kHz	(7)_____	81 kHz	±204 Hz
7.	**Noise Sidebands**				
	Offset from 1 GHz signal				
	10 kHz		(1)_____	–93 dBc/Hz	±2.44 dB
	20 kHz		(2)_____	–100 dBc/Hz	±2.44 dB
	30 kHz		(3)_____	–104 dBc/Hz	±2.44 dB
	100 kHz		(4)_____	–113 dBc/Hz	±2.44 dB
9.	**System-Related Sidebands**				
	Offset from 500 MHz signal				
	30 kHz to 230 kHz		(1)_____	–65 dBc	±1.30 dB
	–30 kHz to –230 kHz		(2)_____	–65 dBc	±1.30 dB
10.	**Residual FM**				
	1 kHz Res BW		(1)_____	150 Hz	±21 Hz
11.	**Sweep Time Accuracy**				

ManualsPlus.com

Table 3-16 Agilent E4411B Performance Verification Test Record

Agilent Technologies					
Model E4411B			**Report No. _____**		
Serial No. _____			**Date _____**		
Test Description		**Minimum**	**Results Measured**	**Maximum**	**Measurement Uncertainty**
	Sweep Time				
	5 ms	–1.0%	(1)_____	1.0%	±0.16%
	20 ms	–1.0%	(2)_____	1.0%	±0.16%
	100 ms	–1.0%	(3)_____	1.0%	±0.16%
	1 s	–1.0%	(4)_____	1.0%	±0.16%
	10 s	–1.0%	(5)_____	1.0%	±0.16%
12.	**Display Scale Fidelity**				
	Cumulative Log Fidelity, Res BW ≥1 kHz				
	dB from Ref Level				
	–4	–0.34 dB	(1)_____	0.34 dB	±0.082 dB
	–8	–0.38 dB	(2)_____	0.38 dB	±0.078 dB
	–12	–0.42 dB	(3)_____	0.42 dB	±0.075 dB
	–16	–0.46 dB	(4)_____	0.46 dB	±0.073 dB
	–20	–0.50 dB	(5)_____	0.50 dB	±0.078 dB
	–24	–0.54 dB	(6)_____	0.54 dB	±0.074 dB
	–28	–0.58 dB	(7)_____	0.58 dB	±0.073 dB
	–32	–0.62 dB	(8)_____	0.62 dB	±0.077 dB
	–36	–0.66 dB	(9)_____	0.66 dB	±0.075 dB
	–40	–0.70 dB	(10)_____	0.70 dB	±0.081 dB
	–44	–0.74 dB	(11)_____	0.74 dB	±0.077 dB
	–48	–0.78 dB	(12)_____	0.78 dB	±0.076 dB
	–52	–0.82 dB	(13)_____	0.82 dB	±0.080 dB
	–56	–0.86 dB	(14)_____	0.86 dB	±0.078 dB
	–60	–0.90 dB	(15)_____	0.90 dB	±0.084 dB
	–64	–0.94 dB	(16)_____	0.94 dB	±0.081 dB

ManualsPlus.com

Table 3-16 Agilent E4411B Performance Verification Test Record

Agilent Technologies

Model E4411B **Report No.** _____

Serial No. _____ **Date** _____

Test Description	Minimum	Results Measured	Maximum	Measurement Uncertainty
–68	–0.98 dB	(17)_____	0.98 dB	±0.080 dB
–72	–1.02 dB	(18)_____	1.02 dB	±0.084 dB
–76	–1.06 dB	(19)_____	1.06 dB	±0.083 dB
–80	–1.10 dB	(20)_____	1.10 dB	±0.089 dB
–84	–1.14 dB	(21)_____	1.14 dB	±0.086 dB
Incremental Log Fidelity, Res BW ≥1 kHz				
dB from Ref Level				
–4	–0.4 dB	(22)_____	0.4 dB	±0.082 dB
–8	–0.4 dB	(23)_____	0.4 dB	±0.078 dB
–12	–0.4 dB	(24)_____	0.4 dB	±0.075 dB
–16	–0.4 dB	(25)_____	0.4 dB	±0.073 dB
–20	–0.4 dB	(26)_____	0.4 dB	±0.078 dB
–24	–0.4 dB	(27)_____	0.4 dB	±0.074 dB
–28	–0.4 dB	(28)_____	0.4 dB	±0.073 dB
–32	–0.4 dB	(29)_____	0.4 dB	±0.077 dB
–36	–0.4 dB	(30)_____	0.4 dB	±0.075 dB
–40	–0.4 dB	(31)_____	0.4 dB	±0.081 dB
–44	–0.4 dB	(32)_____	0.4 dB	±0.077 dB
–48	–0.4 dB	(33)_____	0.4 dB	±0.076 dB
–52	–0.4 dB	(34)_____	0.4 dB	±0.080 dB
–56	–0.4 dB	(35)_____	0.4 dB	±0.078 dB
–60	–0.4 dB	(36)_____	0.4 dB	±0.084 dB
–64	–0.4 dB	(37)_____	0.4 dB	±0.081 dB
–68	–0.4 dB	(38)_____	0.4 dB	±0.080 dB
–72	–0.4 dB	(39)_____	0.4 dB	±0.084 dB

ManualsPlus.com

Table 3-16 Agilent E4411B Performance Verification Test Record

Agilent Technologies

Model E4411B **Report No.** _____

Serial No. _____ **Date** _____

Test Description	Minimum	Results Measured	Maximum	Measurement Uncertainty
–76	–0.4 dB	(40)_____	0.4 dB	±0.083 dB
–80	–0.4 dB	(41)_____	0.4 dB	±0.089 dB
Cumulative Log Fidelity, Res BW ≤300 Hz *(Option 1DR only)*				
dB from Ref Level				
–4	–0.34 dB	(43)_____	0.34 dB	±0.082 dB
–8	–0.38 dB	(44)_____	0.38 dB	±0.078 dB
–12	–0.42 dB	(45)_____	0.42 dB	±0.075 dB
–16	–0.46 dB	(46)_____	0.46 dB	±0.073 dB
–20	–0.50 dB	(47)_____	0.50 dB	±0.078 dB
–24	–0.54 dB	(48)_____	0.54 dB	±0.074 dB
–28	–0.58 dB	(49)_____	0.58 dB	±0.073 dB
–32	–0.62 dB	(50)_____	0.62 dB	±0.077 dB
–36	–0.66 dB	(51)_____	0.66 dB	±0.075 dB
–40	–0.70 dB	(52)_____	0.70 dB	±0.081 dB
–44	–0.74 dB	(53)_____	0.74 dB	±0.077 dB
–48	–0.78 dB	(54)_____	0.78 dB	±0.076 dB
–52	–0.82 dB	(55)_____	0.82 dB	±0.080 dB
–56	–0.86 dB	(56)_____	0.86 dB	±0.078 dB
–60	–0.90 dB	(57)_____	0.90 dB	±0.084 dB
–64	–0.94 dB	(58)_____	0.94 dB	±0.081 dB
–68	–0.98 dB	(59)_____	0.98 dB	±0.080 dB
–72	–1.02 dB	(60)_____	1.02 dB	±0.084 dB
–76	–1.06 dB	(61)_____	1.06 dB	±0.083 dB
–80	–1.10 dB	(62)_____	1.10 dB	±0.089 dB

ManualsPlus.com

Table 3-16 Agilent E4411B Performance Verification Test Record

Agilent Technologies

Model E4411B **Report No.** _____

Serial No. _____ **Date** _____

Test Description	Minimum	Results Measured	Maximum	Measurement Uncertainty
–84	–1.14 dB	(63)_____	1.14 dB	±0.086 dB
–88	–1.18 dB	(64)_____	1.18 dB	±0.085 dB
–92	–1.22 dB	(65)_____	1.22 dB	±0.100 dB
–96	–1.26 dB	(66)_____	1.26 dB	±0.099 dB
–98	–1.28 dB	(67)_____	1.28 dB	±0.098 dB
Incremental Log Fidelity, Res BW ≤300 Hz *(Option 1DR only)*				
dB from Ref Level				
–4	–0.4 dB	(68)_____	0.4 dB	±0.082 dB
–8	–0.4 dB	(69)_____	0.4 dB	±0.078 dB
–12	–0.4 dB	(70)_____	0.4 dB	±0.075 dB
–16	–0.4 dB	(71)_____	0.4 dB	±0.073 dB
–20	–0.4 dB	(72)_____	0.4 dB	±0.078 dB
–24	–0.4 dB	(73)_____	0.4 dB	±0.074 dB
–28	–0.4 dB	(74)_____	0.4 dB	±0.073 dB
–32	–0.4 dB	(75)_____	0.4 dB	±0.077 dB
–36	–0.4 dB	(76)_____	0.4 dB	±0.075 dB
–40	–0.4 dB	(77)_____	0.4 dB	±0.081 dB
–44	–0.4 dB	(78)_____	0.4 dB	±0.077 dB
–48	–0.4 dB	(79)_____	0.4 dB	±0.076 dB
–52	–0.4 dB	(80)_____	0.4 dB	±0.080 dB
–56	–0.4 dB	(81)_____	0.4 dB	±0.078 dB
–60	–0.4 dB	(82)_____	0.4 dB	±0.084 dB
–64	–0.4 dB	(83)_____	0.4 dB	±0.081 dB
–68	–0.4 dB	(84)_____	0.4 dB	±0.080 dB

ManualsPlus.com

Table 3-16 Agilent E4411B Performance Verification Test Record

Agilent Technologies

Model E4411B **Report No.** _____

Serial No. _____ **Date** _____

Test Description	Minimum	Results Measured	Maximum	Measurement Uncertainty
–72	–0.4 dB	(85)_____	0.4 dB	±0.084 dB
–76	–0.4 dB	(86)_____	0.4 dB	±0.083 dB
–80	–0.4 dB	(87)_____	0.4 dB	±0.089 dB
Linear Fidelity, Res BW ≥1 kHz				
dB from Ref Level				
–4	–2.0%	(93)_____	2.0%	±0.064%
–8	–2.0%	(94)_____	2.0%	±0.064%
–12	–2.0%	(95)_____	2.0%	±0.064%
–16	–2.0%	(96)_____	2.0%	±0.064%
–20	–2.0%	(97)_____	2.0%	±0.063%
Linear Fidelity, Res BW ≤300 Hz *(Option 1DR only)*				
dB from Ref Level				
–4	–2.0%	(98)_____	2.0%	±0.064%
–8	–2.0%	(99)_____	2.0%	±0.064%
–12	–2.0%	(100)_____	2.0%	±0.064%
–16	–2.0%	(101)_____	2.0%	±0.064%
–20	–2.0%	(102)_____	2.0%	±0.063%
Zero Span, Res BW ≤300 Hz *(Option 1DR only)*				
dB from Ref Level				
–4	–0.36 dB	(103)_____	0.36 dB	±0.082 dB
–8	–0.42 dB	(104)_____	0.42 dB	±0.078 dB
–12	–0.48 dB	(105)_____	0.48 dB	±0.075 dB
–16	–0.54 dB	(106)_____	0.54 dB	±0.073 dB

ManualsPlus.com

Table 3-16 Agilent E4411B Performance Verification Test Record

Agilent Technologies					
Model E4411B			**Report No. _____**		
Serial No. _____			**Date _____**		
Test Description		**Minimum**	**Results Measured**	**Maximum**	**Measurement Uncertainty**
	–20	–0.60 dB	(107)_____	0.60 dB	±0.078 dB
	–24	–0.66 dB	(108)_____	0.66 dB	±0.074 dB
	–28	–0.72 dB	(109)_____	0.72 dB	±0.073 dB
	–32	–0.78 dB	(110)_____	0.78 dB	±0.077 dB
	–36	–0.84 dB	(111)_____	0.84 dB	±0.075 dB
	–40	–0.90 dB	(112)_____	0.90 dB	±0.081 dB
	–44	–0.96 dB	(113)_____	0.96 dB	±0.077 dB
	–48	–1.02 dB	(114)_____	1.02 dB	±0.076 dB
	–52	–1.08 dB	(115)_____	1.08 dB	±0.080 dB
	–56	–1.14 dB	(116)_____	1.14 dB	±0.078 dB
	–60	–1.20 dB	(117)_____	1.20 dB	±0.084 dB
	–64	–1.5 dB	(118)_____	1.5 dB	±0.081 dB
	–68	–1.5 dB	(119)_____	1.5 dB	±0.080 dB
	–70	–1.5 dB	(120)_____	1.5 dB	±0.084 dB
13.	**Input Attenuation Switching Uncertainty**				
	Input Attenuation Setting				
	0 dB	–0.3 dB	(1)_____	0.3 dB	±0.101 dB
	5 dB	–0.3 dB	(2)_____	0.3 dB	±0.104 dB
	15 dB	–0.3 dB	(3)_____	0.3 dB	±0.102 dB
	20 dB	–0.3 dB	(4)_____	0.3 dB	±0.098 dB
	25 dB	–0.35 dB	(5)_____	0.35 dB	±0.098 dB
	30 dB	–0.40 dB	(6)_____	0.40 dB	±0.096 dB
	35 dB	–0.45 dB	(7)_____	0.45 dB	±0.099 dB
	40 dB	–0.50 dB	(8)_____	0.50 dB	±0.096 dB
	45 dB	–0.55 dB	(9)_____	0.55 dB	±0.099 dB

ManualsPlus.com

Table 3-16 Agilent E4411B Performance Verification Test Record

Agilent Technologies

Model E4411B **Report No.** _____

Serial No. _____ **Date** _____

Test Description		Minimum	Results Measured	Maximum	Measurement Uncertainty
	50 dB	–0.60 dB	(10)_____	0.60 dB	±0.095 dB
	55 dB	–0.65 dB	(11)_____	0.65 dB	±0.099 dB
	60 dB	–0.70 dB	(12)_____	0.70 dB	±0.100 dB
14.	**Reference Level Accuracy**				
	Log				
	Reference Level				
	50 Ω (dBm) 75 Ω (dBmV)				
	–15 33.75	–0.3 dB	(1)_____	0.3 dB	±0.091 dB
	–5 43.75	–0.3 dB	(2)_____	0.3 dB	±0.100 dB
	–35 13.75	–0.3 dB	(3)_____	0.3 dB	±0.092 dB
	–45 3.75	–0.3 dB	(4)_____	0.3 dB	±0.094 dB
	–55 –6.25	–0.5 dB	(5)_____	0.5 dB	±0.095 dB
	–65 –16.25	–0.5 dB	(6)_____	0.5 dB	±0.097 dB
	–75 –26.25	–0.7 dB	(7)_____	0.7 dB	±0.099 dB
	Linear				
	Reference Level				
	50Ω (dBm) 75Ω (dBmV)				
	–15 33.75	–0.3 dB	(8)_____	0.3 dB	±0.091 dB
	–5 43.75	–0.3 dB	(9)_____	0.3 dB	±0.100 dB
	–35 13.75	–0.3 dB	(10)_____	0.3 dB	±0.092 dB
	–45 3.75	–0.3 dB	(11)_____	0.3 dB	±0.094 dB
	–55 –6.25	–0.5 dB	(12)_____	0.5 dB	±0.095 dB
	–65 –16.25	–0.5 dB	(13)_____	0.5 dB	±0.097 dB
	–75 –26.25	–0.7 dB	(14)_____	0.7 dB	±0.099 dB

ManualsPlus.com

Table 3-16 Agilent E4411B Performance Verification Test Record

Agilent Technologies

Model E4411B **Report No.** _____

Serial No. _____ **Date** _____

Test Description		Minimum	Results Measured	Maximum	Measurement Uncertainty
16.	**Resolution Bandwidth Switching Uncertainty**				
	Resolution Bandwidth				
	3 kHz	–0.3 dB	(1)_____	0.3 dB	±0.048 dB
	9 kHz	–0.3 dB	(2)_____	0.3 dB	±0.048 dB
	10 kHz	–0.3 dB	(3)_____	0.3 dB	±0.048 dB
	30 kHz	–0.3 dB	(4)_____	0.3 dB	±0.048 dB
	100 kHz	–0.3 dB	(5)_____	0.3 dB	±0.048 dB
	120 kHz	–0.3 dB	(6)_____	0.3 dB	±0.048 dB
	300 kHz	–0.3 dB	(7)_____	0.3 dB	±0.048 dB
	1 MHz	–0.3 dB	(8)_____	0.3 dB	±0.048 dB
	3 MHz	–0.3 dB	(9)_____	0.3 dB	±0.048 dB
	5 MHz	–0.6 dB	(10)_____	0.6 dB	±0.076 dB
	300 Hz *(Option 1DR only)*	–3.0 dB	(11)_____	0.3 dB	±0.048 dB
	200 Hz *(Option 1DR only)*	–3.0 dB	(12)_____	0.3 dB	±0.048 dB
	100 Hz *(Option 1DR only)*	–3.0 dB	(13)_____	0.3 dB	±0.048 dB
17.	**Absolute Amplitude Accuracy (Reference Settings)**				
	Log, Preamp Off	–0.4 dB	(1)_____	0.4 dB	±0.09 dB
	Lin, Preamp Off	–0.4 dB	(2)_____	0.4 dB	±0.09 dB
19.	**Overall Absolute Amplitude Accuracy**				
	0 dBm Reference Level				
	0 dBm input	–0.6 dB	(1)_____	0.6 dB	±0.234 dB
	–10 dBm input	–0.6 dB	(2)_____	0.6 dB	±0.115 dB
	–20 dBm input	–0.6 dB	(3)_____	0.6 dB	±0.110 dB

ManualsPlus.com

Table 3-16 Agilent E4411B Performance Verification Test Record

Agilent Technologies

Model E4411B **Report No.** _____

Serial No. _____ **Date** _____

Test Description		Minimum	Results Measured	Maximum	Measurement Uncertainty
	–30 dBm input	–0.6 dB	(4)_____	0.6 dB	±0.109 dB
	–40 dBm input	–0.6 dB	(5)_____	0.6 dB	±0.109 dB
	–50 dBm input	–0.6 dB	(6)_____	0.6 dB	±0.109 dB
	–20 dBm Reference Level				
	–20 dBm input	–0.6 dB	(7)_____	0.6 dB	±0.109 dB
	–30 dBm input	–0.6 dB	(8)_____	0.6 dB	±0.109 dB
	–40 dBm input	–0.6 dB	(9)_____	0.6 dB	±0.109 dB
	–50 dBm input	–0.6 dB	(10)_____	0.6 dB	±0.109 dB
	–40 dBm Reference Level				
	–40 dBm input	–0.6 dB	(11)_____	0.6 dB	±0.087 dB
	–50 dBm input	–0.6 dB	(12)_____	0.6 dB	±0.087 dB
	–50 dBm Reference Level				
	–50 dBm input	–0.6 dB	(13)_____	0.6 dB	±0.087 dB
21.	**Resolution Bandwidth Accuracy**				
	Resolution Bandwidth				
	5 MHz	3.5 MHz	(1)_____	6.5 MHz	±110 kHz
	3 MHz	2.55 MHz	(2)_____	3.45 MHz	±66 kHz
	1 MHz	0.85 MHz	(3)_____	1.15 MHz	±22 kHz
	300 kHz	255 kHz	(4)_____	345 kHz	±6.6 kHz
	100 kHz	85 kHz	(5)_____	115 kHz	±2.2 kHz
	30 kHz	25.5 kHz	(6)_____	34.5 kHz	±660 Hz
	10 kHz	8.5 kHz	(7)_____	11.5 kHz	±220 Hz
	3 kHz	2.55 kHz	(8)_____	3.45 kHz	±66 Hz
	1 kHz	850 Hz	(9)_____	1.15 kHz	±22 Hz
	120 kHz	96 kHz	(10)_____	144 kHz	±2.17 kHz

ManualsPlus.com

Table 3-16 Agilent E4411B Performance Verification Test Record

Agilent Technologies					
Model E4411B			**Report No. _____**		
Serial No. _____			**Date _____**		
Test Description		**Minimum**	**Results Measured**	**Maximum**	**Measurement Uncertainty**
	9 kHz	7.2 kHz	(11)_____	10.8 kHz	±163 Hz
22.	**Frequency Response**	Note: Enter data in the appropriate section below depending upon the ambient temperature at which the test was performed and installed options.			
	20 to 30° C				
	50 Ω Input (No Option 1DP) (9 kHz to 1.5 GHz)				
	Maximum Response		(1)_____	0.50 dB	±0.19 dB
	Minimum Response	–0.50 dB	(2)_____		±0.19 dB
	Peak-to-Peak Response		(3)_____	1.0 dB	±0.19 dB
	Option 1DP (75 Ω) (1 MHz to 1.5 GHz)				
	Maximum Response		(1)_____	0.50 dB	±0.11 dB
	Minimum Response	–0.50 dB	(2)_____		±0.11 dB
	Peak-to-Peak Response		(3)_____	1.0 dB	±0.11 dB
	0 to 55° C				
	50 Ω Input (No Option 1DP) (9 kHz to 1.5 GHz)				
	Maximum Response		(1)_____	1.0 dB	±0.19 dB
	Minimum Response	–1.0 dB	(2)_____		±0.19 dB
	Peak-to-Peak Response		(3)_____	2.0 dB	±0.19 dB
	Option 1DP (75 Ω) (1 MHz to 1.5 GHz)				
	Maximum Response		(1)_____	1.0 dB	±0.11 dB

ManualsPlus.com

Table 3-16 Agilent E4411B Performance Verification Test Record

Agilent Technologies					
Model E4411B			**Report No. _____**		
Serial No. _____			**Date _____**		
Test Description		**Minimum**	**Results Measured**	**Maximum**	**Measurement Uncertainty**
	Minimum Response	–1.0 dB	(2)_____		±0.11 dB
	Peak-to-Peak Response		(3)_____	2.0 dB	±0.11 dB
28.	**Other Input-Related Spurious Responses**				
	Input Frequency				
	542.8 MHz		(1)_____	–65 dBc	±.889 dB
	510.7 MHz		(2)_____	–65 dBc	±.889 dB
	1310.7 MHz		(3)_____	–45 dBc	±.889 dB
30.	**Spurious Responses**	Note: Enter the results in the appropriate lines below based upon the input impedance of the analyzer. Test Record Entry 2 does not apply to Agilent E4411B.			
	50 MHz TOI, 50 Ω	7.5 dBm	(1)_____		±0.93 dB
	50 MHz TOI, 75 Ω	56.25 dBmV	(1)_____		±0.93 dB
	40 MHz SHI, 50 Ω	35 dBm	(3)_____		±.050 dB
	40 MHz SHI, 75 Ω	83.75 dBmV	(3)_____		±.050 dB
33.	**Gain Compression**	Note: Test Record Entry 2 does not apply to Agilent E4411B.			
	Test Frequency				
	53 MHz		(1)_____	1.0 dB	±0.123 dB
	1403 MHz		(3)_____	1.0 dB	±0.123 dB
35.	**Displayed Average Noise Level**	Note: Enter data in the appropriate section below depending upon the input impedance and serial number of the analyzer.			
	50 Ω, 1 kHz RBW				
	400 kHz		(1)_____	–115 dBm	±1.23 dB
	1 MHz to 10 MHz		(2)_____	–115 dBm	±1.23 dB
	10 MHz to 500 MHz		(3)_____	–119 dBm	±1.23 dB
	500 MHz to 1 GHz		(4)_____	–117 dBm	±1.23 dB
	1 GHz to 1.5 GHz		(5)_____	–113 dBm	±1.23 dB

ManualsPlus.com

Table 3-16 Agilent E4411B Performance Verification Test Record

Agilent Technologies					
Model E4411B			**Report No. _____**		
Serial No. _____			**Date _____**		
Test Description		**Minimum**	**Results Measured**	**Maximum**	**Measurement Uncertainty**
	50 Ω, 100 Hz RBW				
	400 kHz		(11)_____	–123 dBm	±1.23 dB
	1 MHz to 10 MHz		(12)_____	–123 dBm	±1.23 dB
	10 MHz to 500 MHz		(13)_____	–127 dBm	±1.23 dB
	500 MHz to 1 GHz		(14)_____	–125 dBm	±1.23 dB
	1 GHz to 1.5 GHz		(15)_____	–121 dBm	±1.23 dB
	75 Ω, 1 kHz RBW				
	1 MHz to 10 MHz		(21)_____	–63 dBmV	±1.23 dB
	10 MHz to 500 MHz		(22)_____	–65 dBmV	±1.23 dB
	500 MHz to 1 GHz		(23)_____	–60 dBmV	±1.23 dB
	1 GHz to 1.5 GHz		(24)_____	–53 dBmV	±1.23 dB
	75 Ω, 100 Hz RBW				
	1 MHz to 10 MHz		(29)_____	–72 dBmV	±1.23 dB
	10 MHz to 500 MHz		(30)_____	–74 dBmV	±1.23 dB
	500 MHz to 1 GHz		(31)_____	–68 dBmV	±1.23 dB
	1 GHz to 1.5 GHz		(32)_____	–61 dBmV	±1.23 dB
39.	**Residual Responses**	Note: Enter data in the appropriate section below depending upon the input impedance and serial number of the analyzer.			
	50 Ω, 150 kHz to 1.5 GHz		(1)_____	–90 dBm	±0.87 dB
	75 Ω, 1 MHz to 1.5 GHz		(1)_____	–36 dBmV	±0.87 dB
41.	**Tracking Generator Absolute Amplitude and Vernier Accuracy**	Note: Enter data in the appropriate section below depending upon the input impedance and serial number of the analyzer.			
	50 Ω *(Option 1DN)*				
	Absolute Amplitude Accuracy	–0.5 dB	(1)_____	0.5 dB	±0.096 dB
	Positive Vernier Accuracy		(2)_____	0.75 dB	±0.008 dB

ManualsPlus.com

Table 3-16 Agilent E4411B Performance Verification Test Record

Agilent Technologies					
Model E4411B			**Report No. _____**		
Serial No. _____			**Date _____**		
Test Description		**Minimum**	**Results Measured**	**Maximum**	**Measurement Uncertainty**
	Negative Vernier Accuracy	–0.75 dB	(3)_____		±0.008 dB
	Power Sweep Accuracy		(4)_____	1.5 dB	±0.008 dB
	75 Ω *(Option 1DQ)*				
	Absolute Amplitude Accuracy	–1.5 dB	(1)_____	1.5 dB	±0.096 dB
	Positive Vernier Accuracy		(2)_____	0.9 dB	±0.008 dB
	Negative Vernier Accuracy	–0.9 dB	(3)_____		±0.008 dB
	Power Sweep Accuracy		(4)_____	1.8 dB	±0.008 dB
43.	**Tracking Generator Level Flatness**	Note: Enter data in the appropriate section below depending upon the input impedance and serial number of the analyzer.			
	50Ω *(Option 1DN)*				
	Positive Level Flatness, <1 MHz		(1)_____	2.0 dB	±0.73 dB
	Negative Level Flatness, <1 MHz	–2.0 dB	(2)_____		±0.73 dB
	Positive Level Flatness, 1 MHz to 10 MHz		(3)_____	2.0 dB	±0.19 dB
	Negative Level Flatness, 1 MHz to 10 MHz	–2.0 dB	(4)_____		±0.19 dB
	Positive Level Flatness, >10 MHz		(5)_____	1.5 dB	±0.19 dB
	Negative Level Flatness, >10 MHz	–1.5 dB	(6)_____		±0.19 dB
	75 Ω *(Option 1DQ)*				
	Positive Level Flatness, 1 MHz to 10 MHz		(3)_____	2.5 dB	±0.19 dB
	Negative Level Flatness, 1 MHz to 10 MHz	–2.5 dB	(4)_____		±0.19 dB

ManualsPlus.com

Table 3-16 Agilent E4411B Performance Verification Test Record

Agilent Technologies					
Model E4411B			**Report No. _____**		
Serial No. _____			**Date _____**		
Test Description		**Minimum**	**Results Measured**	**Maximum**	**Measurement Uncertainty**
	Positive Level Flatness, >10 MHz		(5)_____	2.0 dB	±0.19 dB
	Negative Level Flatness, >10 MHz	–2.0 dB	(6)_____		±0.19 dB
45.	**Tracking Generator Harmonic Spurious Outputs** *(Option 1DN or Option 1DQ only)*				
	2nd Harmonic, <20 MHz		(1)_____	–20 dBc	±2.6 dB
	2nd Harmonic, ≥20 MHz		(2)_____	–25 dBc	±2.6 dB
	3rd Harmonic, <20 MHz		(3)_____	–20 dBc	±2.6 dB
	3rd Harmonic, ≥20 MHz		(4)_____	–25 dBc	±2.6 dB
47.	**Tracking Generator Non-Harmonic Spurious Outputs** *(Option 1DN or Option 1DQ only)*				
	Highest Non-Harmonic Spurious Output Amplitude		(1)_____	–35 dBc	±2.64 dB

ManualsPlus.com

ManualsPlus.com

4 If You Have a Problem

This chapter includes information on how to check for a problem with your Agilent ESA Series Spectrum Analyzer, and how to return it for service. It also includes descriptions of the types of built-in messages.

ManualsPlus.com

What You'll Find in This Chapter

This chapter includes information on how to check for a problem with your Agilent ESA Series Spectrum Analyzer, and how to return it for service. It also includes descriptions of all of the analyzer built-in messages.

Your analyzer is built to provide dependable service. However, if you experience a problem, desire additional information, or wish to order parts, options, or accessories, Agilent Technologies' worldwide sales and service organization is ready to provide the support you need.

In general, a problem can be caused by a hardware failure, a software error, or a user error. Follow these general steps to determine the cause and to resolve the problem.

1. Perform the quick checks listed in "Check the Basics" in this chapter. It is possible that a quick check may eliminate your problem altogether.
2. If the problem is a hardware problem, you have several options:
   - Repair it yourself; see the "Service Options" section in this chapter.
   - Return the analyzer to Agilent Technologies for repair; if the analyzer is still under warranty or is covered by an Agilent Technologies maintenance contract, it will be repaired under the terms of the warranty or plan (the warranty is at the front of this manual).
   - If the analyzer is no longer under warranty or is not covered by an Agilent Technologies maintenance plan, Agilent Technologies will notify you of the cost of the repair after examining the instrument. See "How to Call Agilent Technologies" and "How to Return Your Analyzer for Service" for more information.

WARNING **No operator serviceable parts inside the analyzer. Refer servicing to qualified personnel. To prevent electrical shock do not remove covers.**

ManualsPlus.com

Before You Call Agilent Technologies

Check the Basics

A problem can often be resolved by repeating the procedure you were following when the problem occurred. Before calling Agilent Technologies or returning the analyzer for service, please make the following checks:

- ❑ Check the line fuse.
- ❑ Is there power at the receptacle?
- ❑ Is the analyzer turned on? Make sure the fan is running, which indicates that the power supply is on.
- ❑ If the display is dark or dim, press the upper **Viewing Angle** key in the upper-left corner of the front panel. If the display is too bright, adjust the lower **Viewing Angle** key in the upper-left corner of the front panel.
- ❑ If other equipment, cables, and connectors are being used with your Agilent ESA Series Spectrum Analyzer, make sure they are connected properly and operating correctly.
- ❑ Review the procedure for the measurement being performed when the problem appeared. Are all the settings correct?
- ❑ If the analyzer is not functioning as expected, return the analyzer to a known state by pressing the **Preset** key.

  Some analyzer settings are not affected by a Preset. If you wish to reset the analyzer configuration to the state it was in when it was originally sent from the factory, press **System**, **Power On/Preset**, **Factory Preset** (if it is displayed).
- ❑ Is the measurement being performed, and the results that are expected, within the specifications and capabilities of the analyzer? Refer to the “Specifications and Characteristics” chapters in the Specifications Guide.
- ❑ In order to meet specifications, the analyzer must be aligned. Either Auto Align All must be selected (press **System**, **Alignments**, **Auto Align**, **All**), or the analyzer must be manually aligned at least once per hour, or whenever the temperature changes more than 3° C. When **Auto Align**, **All** is selected, AA appears on the left edge of the display.
- ❑ If the necessary test equipment is available, perform the tests listed in Chapter 1, “Calibrating,” for your instrument. Record all results on the appropriate form in Chapter 3 , “Performance Verification Test Records,” which follows the performance verification tests

ManualsPlus.com

chapter.

- ❑ If the equipment to perform the performance verification tests is not available, you may still be able to perform the functional checks in the ***Agilent ESA Series Spectrum Analyzers User's Guide***.

Read the Warranty

The warranty for your analyzer is at the front of this manual. Please read it and become familiar with its terms.

If your analyzer is covered by a separate maintenance agreement, please be familiar with its terms.

Service Options

Agilent Technologies offers several optional maintenance plans to service your analyzer after the warranty has expired. Call your Agilent Technologies sales and service office for full details.

If you want to service the analyzer yourself after the warranty expires, you can purchase the service documentation that provides all of the necessary test and maintenance information.

You can order the service documentation, Option 0BV (component level information including parts lists, component location diagrams and schematic diagrams) and Option 0BW (assembly level troubleshooting and adjustment procedures), through your Agilent Technologies sales and service office. Service documentation is described under "Component Level Service Documentation (Option 0BV)" and "Service Documentation and Adjustment Software (Option 0BW)" in Chapter 6 of the user's guide.

How to Call Agilent Technologies

Agilent Technologies has sales and service offices around the world to provide you with complete support for your analyzer. To obtain servicing information or to order replacement parts, contact the nearest Agilent Technologies sales and service office listed in Table 4-1. In any correspondence or telephone conversations, refer to your analyzer by its product number, full serial number, and firmware revision. (Press **System**, **More 1 of 3**, **Show System**, and the product number, serial number, and firmware revision information will be displayed on your analyzer screen.) A serial number label is also attached to the rear panel of the analyzer.

ManualsPlus.com

Table 4-1 Agilent Technologies Sales and Service Offices

UNITED STATES		
Instrument Support Center Agilent Technologies, Inc. (800) 403-0801		
EUROPEAN FIELD OPERATIONS		
Headquarters Agilent Technologies S.A. 150, Route du Nant-d'Avril 1217 Meyrin 2/ Geneva Switzerland (41 22) 780.8111	France Agilent Technologies France 1 Avenue Du Canada Zone D'Activite De Courtaboeuf F-91947 Les Ulis Cedex France (33 1) 69 82 60 60	Germany Agilent Technologies GmbH Agilent Technologies Strasse 61352 Bad Homburg v.d.H Germany (49 6172) 16-0
Great Britain Agilent Technologies Ltd. Eskdale Road, Winnersh Triangle Wokingham, Berkshire RG41 5DZ England (44 118) 9696622		
INTERCON FIELD OPERATIONS		
Headquarters Agilent Technologies, Inc. 3495 Deer Creek Rd. Palo Alto, CA 94304-1316 USA (415) 857-5027	Australia Agilent Technologies Australia Ltd. 31-41 Joseph Street Blackburn, Victoria 3130 (61 3) 895-2895	Canada Agilent Technologies (Canada) Ltd. 17500 South Service Road Trans-Canada Highway Kirkland, Quebec H9J 2X8 Canada (514) 697-4232
Japan Agilent Technologies Japan, Ltd. Measurement Assistance Center 9-1, Takakura-Cho, Hachioji-Shi, Tokyo 192-8510, Japan TEL (81) -426-56-7832 FAX (81) -426-56-7840	Singapore Agilent Technologies Singapore (Pte.) Ltd. 150 Beach Road #29-00 Gateway West Singapore 0718 (65) 291-9088	Taiwan Agilent Technologies Taiwan 8th Floor, H-P Building 337 Fu Hsing North Road Taipei, Taiwan (886 2) 712-0404
China China Agilent Technologies, Inc. 38 Bei San Huan X1 Road Shuang Yu Shu Hai Dian District Beijing, China (86 1) 256-6888		

ManualsPlus.com

How to Return Your Analyzer for Service

Service Tag

If you are returning your analyzer to Agilent Technologies for servicing, fill in and attach a blue service tag. Several service tags are supplied at the rear of this chapter. Please be as specific as possible about the nature of the problem. If you have recorded any error messages that appeared on the display, or have completed a Performance Test Record, or have any other specific data on the performance of your analyzer, please send a copy of this information with your return.

Original Packaging

Before shipping, pack the unit in the original factory packaging materials if they are available. If the original materials were not retained, see “Other Packaging”.

NOTE Ensure that the instrument handle is in the rear-facing position in order to reduce the possibility of damage during shipping. Refer to Figure 4-1.

NOTE Install the transportation disk into the floppy drive to reduce the possibility of damage during shipping. If the original transportation disk is not available, a blank floppy may be substituted.

ManualsPlus.com

Figure 4-1

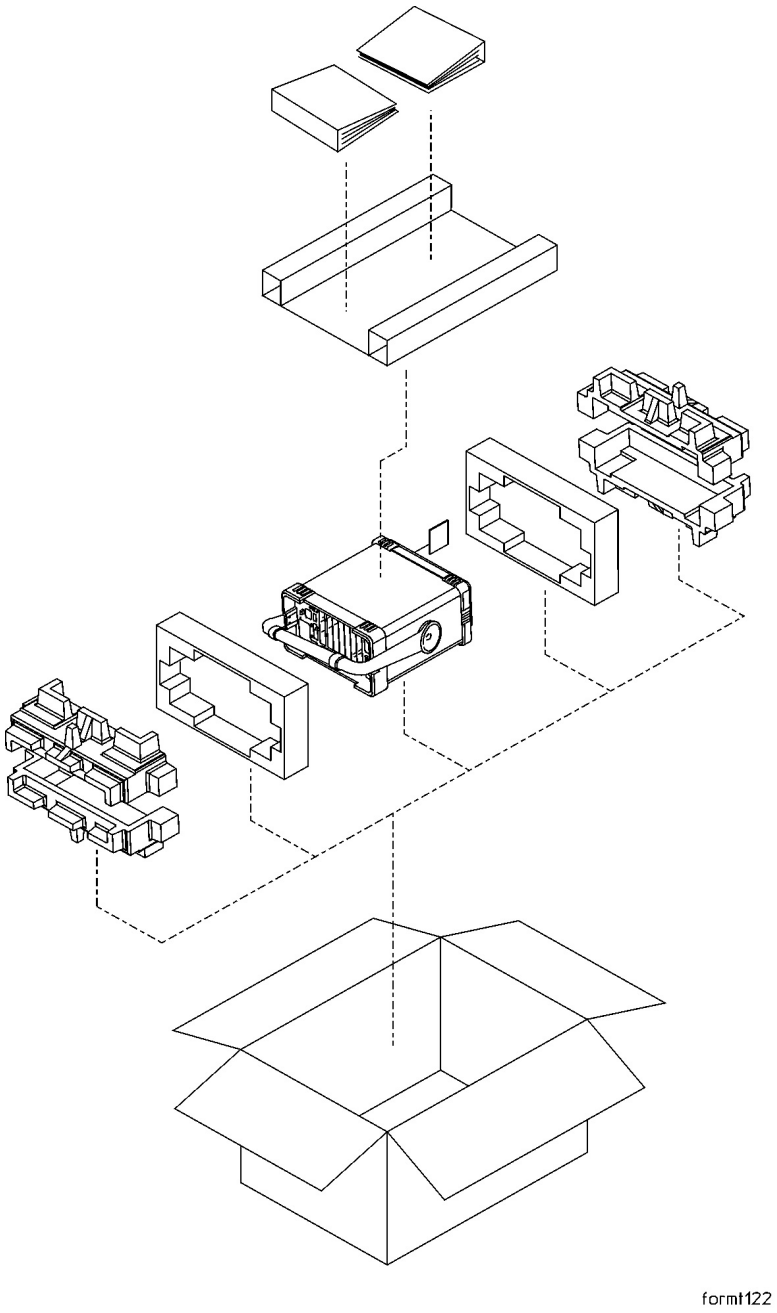

ManualsPlus.com

Other Packaging

CAUTION Analyzer damage can result from using packaging materials other than those specified. Never use styrene pellets in any shape as packaging materials. They do not adequately cushion the equipment or prevent it from shifting in the carton. They cause equipment damage by generating static electricity and by lodging in the analyzer louvers, blocking airflow.

You can repackage the instrument with commercially available materials, as follows:

1. Attach a completed service tag to the instrument.
2. Install the transportation disk or a blank floppy disk into the disk drive.
3. If you have a front-panel cover, install it on the instrument. If you do not have a front panel cover, make sure the instrument handle is in the forward-facing position to protect the control panel.
4. Wrap the instrument in antistatic plastic to reduce the possibility of damage caused by electrostatic discharge.
5. Use a strong shipping container. A double-walled, corrugated cardboard carton with 159 kg (350 lb) bursting strength is adequate. The carton must be both large enough and strong enough to accommodate the analyzer. Allow at least 3 to 4 inches on all sides of the analyzer for packing material.
6. Surround the equipment with three to four inches of packing material and prevent the equipment from moving in the carton. If packing foam is not available, the best alternative is S.D.-240 Air Cap™ from Sealed Air Corporation (Hayward, California, 94545). Air Cap looks like a plastic sheet filled with 1-1/4 inch air bubbles. Use the pink-colored Air Cap to reduce static electricity. Wrapping the equipment several times in this material should both protect the equipment and prevent it from moving in the carton.
7. Seal the shipping container securely with strong nylon adhesive tape.
8. Mark the shipping container “FRAGILE, HANDLE WITH CARE” to assure careful handling.
9. Retain copies of all shipping papers.