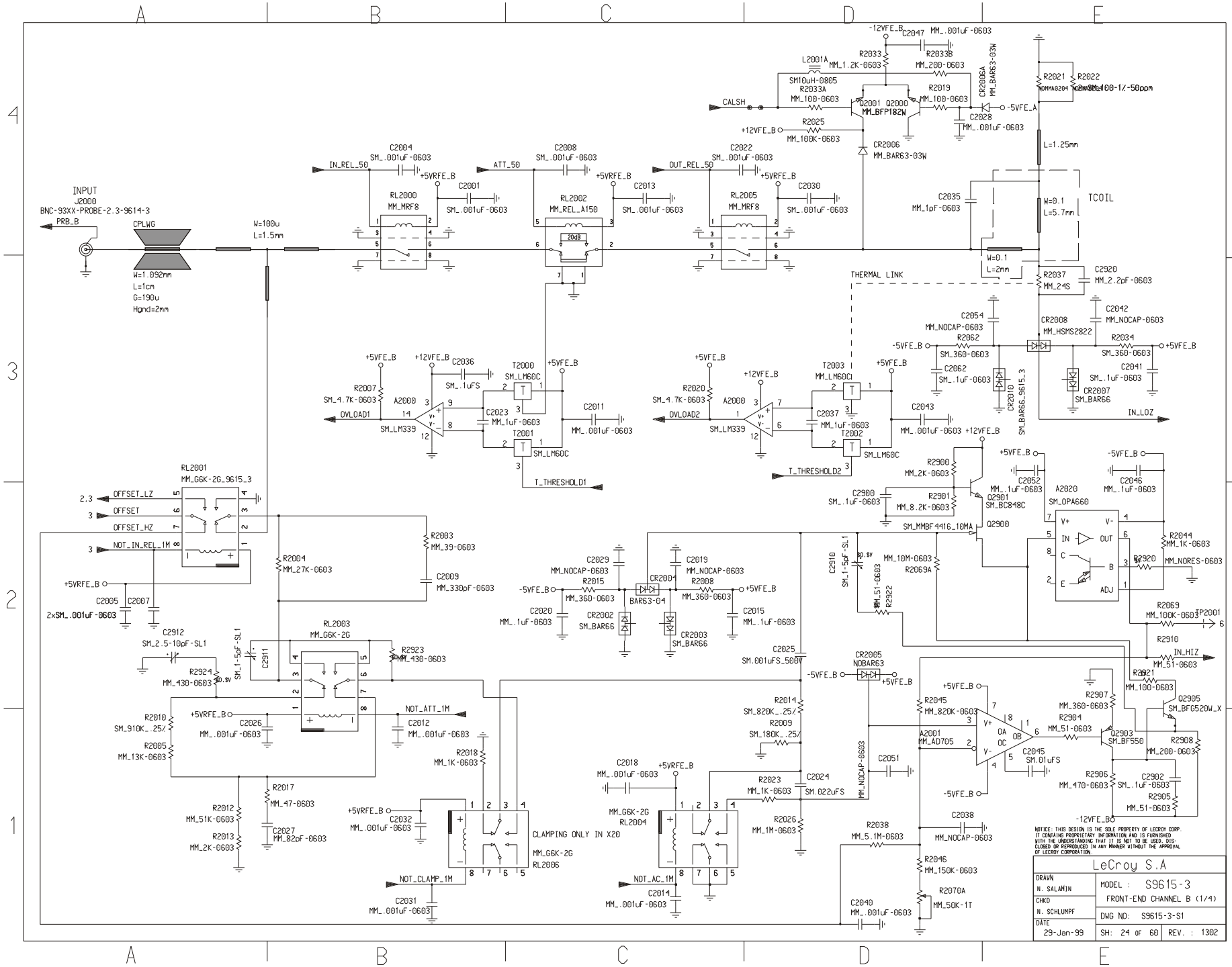
INPUT
J2000
BNC-93XX-PROBE-2.3-9614-3
PRB_B
CPLWG
W=1.092mm
L=1cm
G=190u
Hgnd=2mm
W=100u
L=1.5mm
IN_REL_50
ATT_50
OUT_REL_50
RL2000
MM_MRF8
RL2002
MM_REL_A150
RL2005
MM_MRF8
20dB
CALSH
MM_BFP182W
TCOIL
W=0.1
L=5.7mm
L=1.25mm
THERMAL LINK
IN_LOZ
OVLOAD1
OVLOAD2
T_THRESHOLD1
T_THRESHOLD2
SM_LM339
SM_LM60C
SM_OPA660
SM_BC848C
SM_MMBF4416_10MA
RL2001
MM_G6K-2G_9615_3
OFFSET_LZ
OFFSET
OFFSET_HZ
NOT_IN_REL_1M
RL2003
MM_G6K-2G
NOT_ATT_1M
CLAMPING ONLY IN X20
MM_G6K-2G
RL2006
NOT_CLAMP_1M
RL2004
MM_G6K-2G
NOT_AC_1M
IN_HIZ
SM_BFG520W_X
SM_BF550
SM_AD705
NOTICE: THIS DESIGN IS THE SOLE PROPERTY OF LECROY CORP. IT CONTAINS PROPRIETARY INFORMATION AND IS FURNISHED WITH THE UNDERSTANDING THAT IT IS NOT TO BE USED, DISCLOSED OR REPRODUCED IN ANY MANNER WITHOUT THE APPROVAL OF LECROY CORPORATION.
LeCroy S.A
DRAWN
N. SALAMIN
CHKD
N. SCHLUMPF
DATE
29-Jan-99
MODEL : S9615-3
FRONT-END CHANNEL B (1/4)
DWG NO: S9615-3-S1
SH: 24 OF 60
REV. : 1302