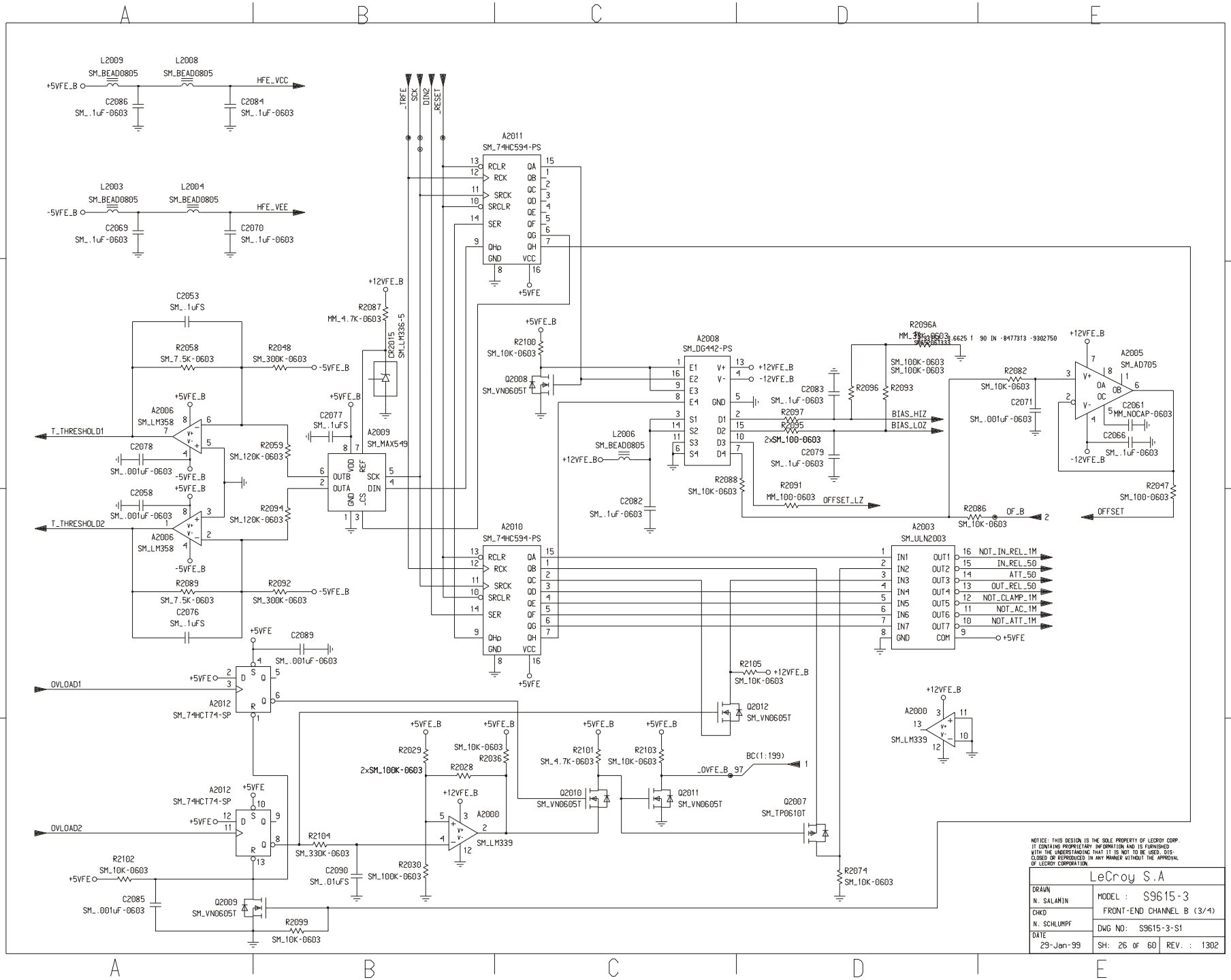

NOTICE: THIS DESIGN IS THE SOLE PROPERTY OF LECROY CORP. IT CONTAINS PROPRIETARY INFORMATION AND IS FURNISHED WITH THE UNDERSTANDING THAT IT IS NOT TO BE USED, DISCLOSED OR REPRODUCED IN ANY MANNER WITHOUT THE APPROVAL OF LECROY CORPORATION.

LeCroy S.A		
DRAWN N. SALAMIN	MODEL : S9615-3	
CHKD N. SCHLUMPF	FRONT-END CHANNEL B (3/4)	
	DWG NO: S9615-3-S1	
DATE 29-Jan-99	SH: 26 OF 60	REV. : 1302