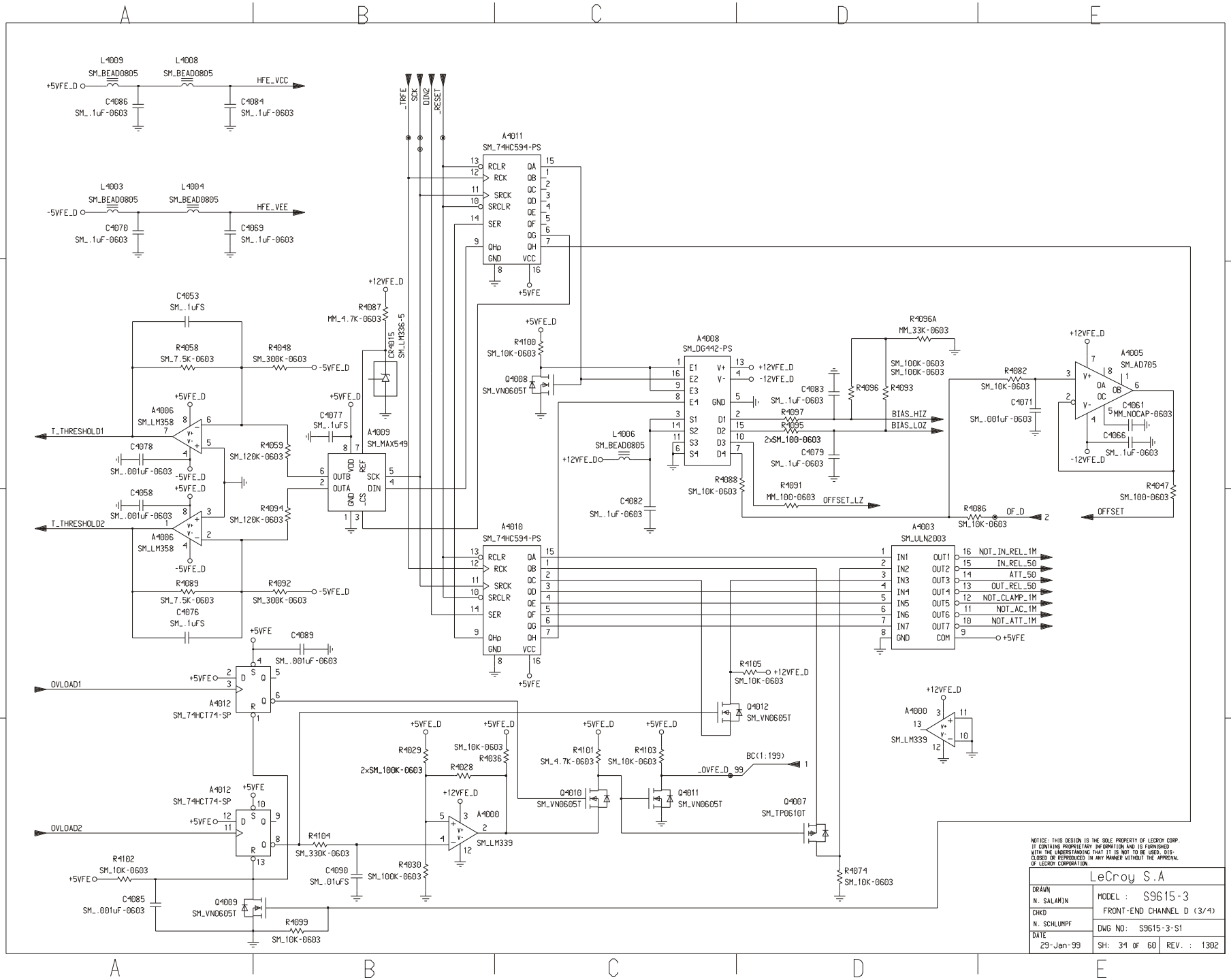

NOTICE: THIS DESIGN IS THE SOLE PROPERTY OF LECROY CORP. IT CONTAINS PROPRIETARY INFORMATION AND IS FURNISHED WITH THE UNDERSTANDING THAT IT IS NOT TO BE USED, DISCLOSED OR REPRODUCED IN ANY MANNER WITHOUT THE APPROVAL OF LECROY CORPORATION.

DRAWN N. SALAMIN	LeCroy S.A	
CHKD N. SCHLUMPF	MODEL : S9615-3 FRONT-END CHANNEL D (3/4)	
DATE 29-Jan-99	DWG NO: S9615-3-S1	
	SH: 34 OF 60	REV. : 1302