ManualsPlus.com
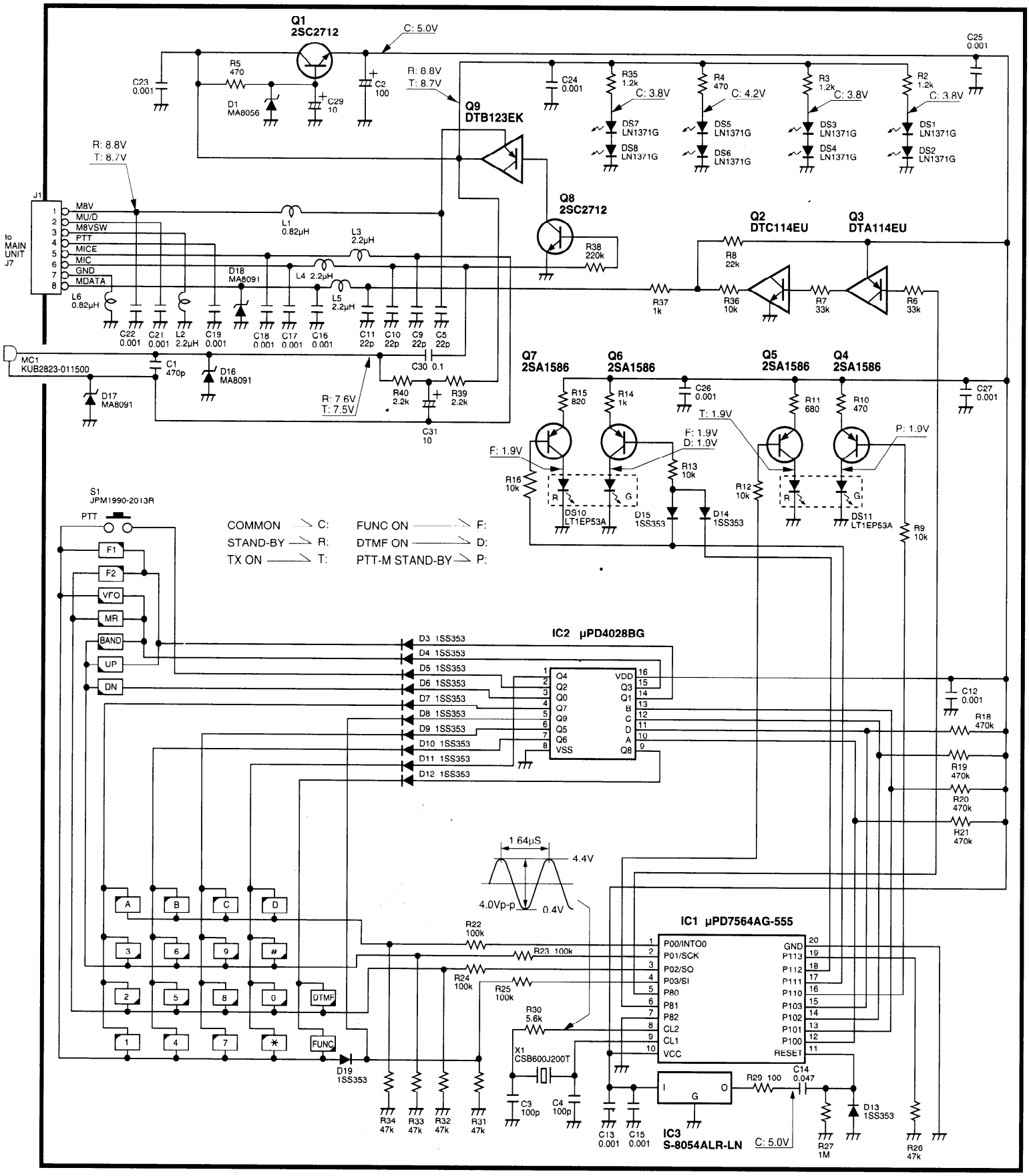
10-1 HM-98 REMOTE CONTROL MICROPHONE