ManualsPlus.com

ICOM

SERVICE MANUAL

144MHz FM TRANSCEIVER

IC-2SAT
IC-2SET

Icom Inc.

ManualsPlus.com

INTRODUCTION

This service manual describes the latest service information for the **IC-2SAT/SET** 144 MHz FM TRANSCEIVER at the time of going to press.
5 versions of the **IC-2SAT/SET** have been designed. This service manual covers each version.

VERSION NUMBER	VERSION	MODEL
#02	Europe	IC-2SET
#04	Italy	
#05	U.S.A.	IC-2SAT
#07	Australia	
#09	Asia	

To upgrade quality, any electric or mechanical part and internal circuits are subject to change without notice or obligation.

DANGER

NEVER connect the transceiver to an AC outlet or to a DC power supply that uses more than 16 V. This will ruin the transceiver.
DO NOT expose the transceiver to rain, snow or any liquids.
DO NOT reverse the polarities of the power supply when connecting the transceiver.
DO NOT apply an RF signal of more than 20 dBm (100 mW) to the antenna connector. This could damage the transceiver's front end.

ORDERING PARTS

Be sure to include the following four points when ordering replacement parts:

1. 10-digit order numbers
2. Component part number and name
3. Equipment model name and unit name
4. Quantity required

<SAMPLE ORDER>

1150000730	IC	SC1096	IC-2SAT	MAIN UNIT	5 pieces
8810005720	Screw	PH B0 M2 × 20 ZK	IC-2SAT	Rear panel	10 pieces

Addresses are provided on the inside back cover for your convenience.

REPAIR NOTE

1. Make sure a problem is internal before disassembling the transceiver.
2. **DO NOT** open the transceiver until the transceiver is disconnected from a power source.
3. **DO NOT** force any of the variable components. Turn them slowly and smoothly.
4. **DO NOT** short any circuits or electronic parts. An insulated tuning tool **MUST** be used for all adjustments.
5. **DO NOT** keep power ON for a long time when the transceiver is defective.
6. **DO NOT** transmit power into a signal generator or a sweep generator.
7. **ALWAYS** connect a 30 dB ~ 40 dB attenuator between the transceiver and a deviation meter or spectrum analyzer when using such test equipment.
8. **READ** the instructions of test equipment thoroughly before connecting equipment to the transceiver.

ManualsPlus.com

TABLE OF CONTENTS

SECTION 1 SPECIFICATIONS ..... **1 — 1**

SECTION 2 INSIDE VIEWS ..... **2 — 1**

SECTION 3 BLOCK DIAGRAM ..... **3 — 1**

SECTION 4 CIRCUIT DESCRIPTION ..... **4 — 1 ~ 6**

4 - 1 RECEIVER CIRCUITS ..... 4 — 1
4 - 2 TRANSMITTER CIRCUITS ..... 4 — 2
4 - 3 PLL CIRCUITS ..... 4 — 3
4 - 4 POWER SUPPLY CIRCUITS ..... 4 — 4
4 - 5 OTHER CIRCUITS ..... 4 — 4
4 - 6 CPU PORT ALLOCATIONS (LOGIC UNIT) ..... 4 — 5

SECTION 5 MECHANICAL PARTS AND DISASSEMBLY ..... **5 — 1 ~ 2**

5 - 1 FRONT PARTS ..... 5 — 1
5 - 2 CHASSIS PARTS ..... 5 — 2

SECTION 6 ADJUSTMENT PROCEDURES ..... **6 — 1 ~ 5**

6 - 1 PREPARATION BEFORE SERVICING ..... 6 — 1
6 - 2 PLL ADJUSTMENT ..... 6 — 2
6 - 3 RECEIVER ADJUSTMENT ..... 6 — 3
6 - 4 TRANSMITTER ADJUSTMENT ..... 6 — 4

SECTION 7 BOARD LAYOUTS ..... **7 — 1 ~ 10**

7 - 1 LOGIC (LGC) UNIT ..... 7 — 1
7 - 2 MAIN (MIN) UNIT ..... 7 — 4
7 - 3 MBD AND AF UNITS ..... 7 — 6
7 - 4 IO AND MIC UNITS ..... 7 — 7
7 - 5 DET AND REG UNITS ..... 7 — 8
7 - 6 RF AND APC UNITS ..... 7 — 9
7 - 7 PLL AND PRT UNITS ..... 7 — 10

SECTION 8 PARTS LIST ..... **8 — 1 ~ 7**

SECTION 9 OPTIONAL UNITS ..... **9 — 1 ~ 3**

9 - 1 UT-50 TONE SQUELCH UNIT ..... 9 — 1
9 - 2 UT-51 TONE ENCODER UNIT ..... 9 — 2
9 - 3 UT-49 DTMF DECODER UNIT ..... 9 — 3

SECTION 10 VOLTAGE DIAGRAM ..... **10 — 1**

ManualsPlus.com

SECTION 1 SPECIFICATIONS

GENERAL

- Frequency coverage :

MODEL	VERSION	FREQUENCY COVERAGE
IC-2SAT	U.S.A.	140.00～150.00 MHz*
	Asia	
IC-2SET	Italy	
IC-2SAT	Australia	144.00～148.00 MHz
IC-2SET	Europe	144.00～146.00 MHz

*Specifications apply to only 144.00～148.00 MHz.

- Mode : F3 (FM)
- Selectable tuning step : 5, 10, 12.5, 15, 20, 25 and 50 kHz
- Memory channels : 48 plus a call channel
- Antenna impedance : 50 Ω
- Power supply requirement : 6～16 V DC negative ground or battery packs BP-81～BP-85 or battery case BP-90
- Current drain (at 13.8 V DC) : Receive 16 mA (power saved)
  250 mA (max. audio output)
  Transmit 650 mA (LOW 1)
  1500 mA (HIGH)
- Usable temperature range : −10 °C～+60 °C (+14 °F～+140 °F)
- Frequency stability : ±15 ppm (−10 °C～+60 °C) (+14 °F～+140 °F)
- Dimensions : 49 (W) × 102.5 (H) × 35 (D) mm
  1.9 (W) × 4.0 (H) × 1.4 (D) in
  (Projections not included)
- Weight : 280 g (9.9 oz)

TRANSMITTER

- Output power (at 13.8 V DC) : High 5.0 W
  Low 3.5/1.5/0.5 W (selectable)
- Modulation system : Variable reactance frequency modulation
- Max. frequency deviation : ±5 kHz
- Spurious emissions : Less than −60 dB
- Microphone impedance : 2 kΩ

RECEIVER

- Receive system : Double-conversion superheterodyne
- Intermediate frequencies : 1st 30.875 MHz
  2nd 455 kHz
- Sensitivity : 0.18 µV for 12 dB SINAD
- Selectivity : More than 15 kHz/−6 dB
  Less than 30 kHz/−60 dB
- Spurious rejection ratio : More than 60 dB
- Audio output power : More than 200 mW at 10 % distortion with an 8 Ω load
- Audio output impedance : 8 Ω

All stated specifications are subject to change without notice or obligation.

ManualsPlus.com

SECTION 2 INSIDE VIEWS

• MAIN UNIT

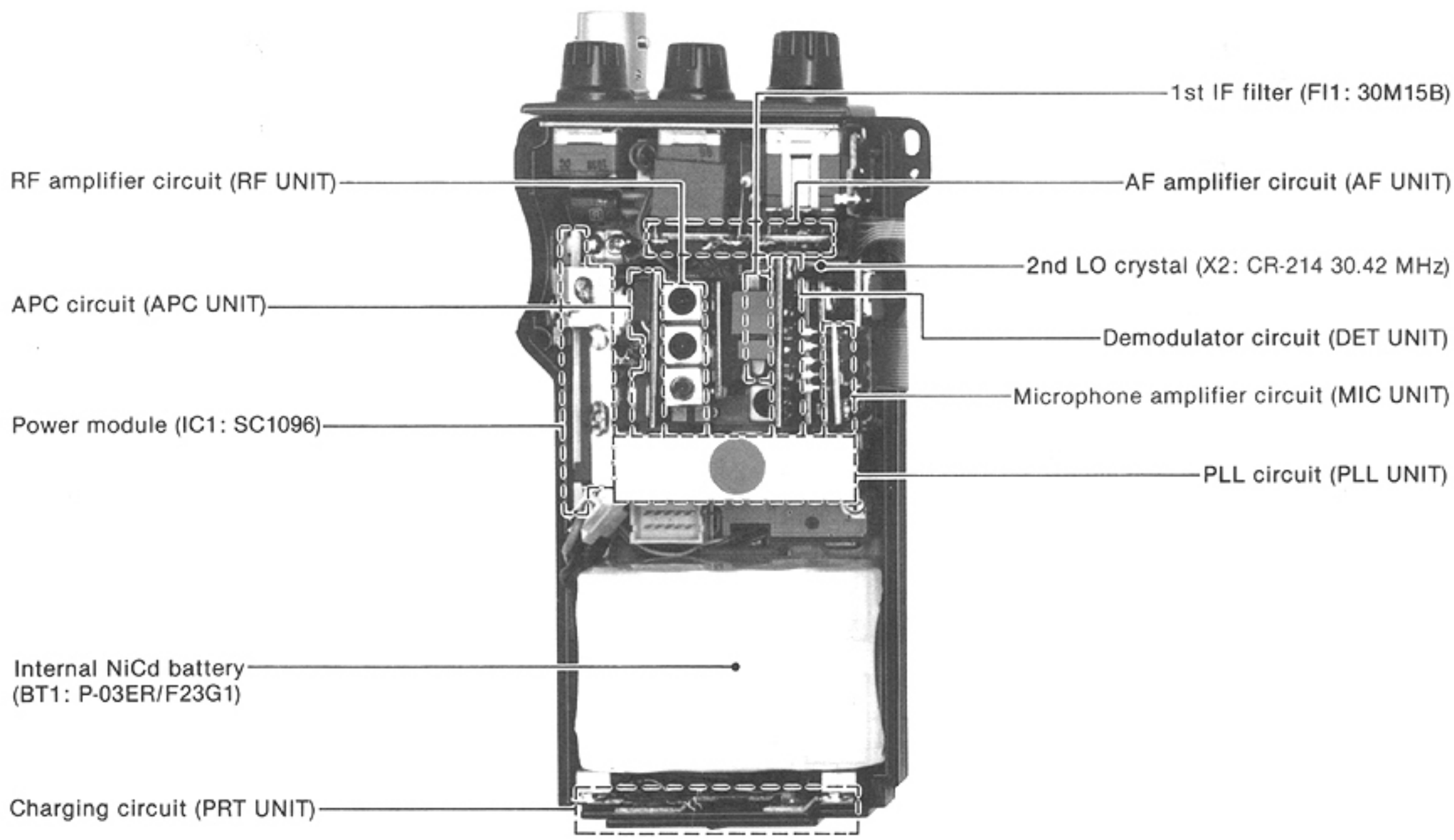

• LOGIC UNIT

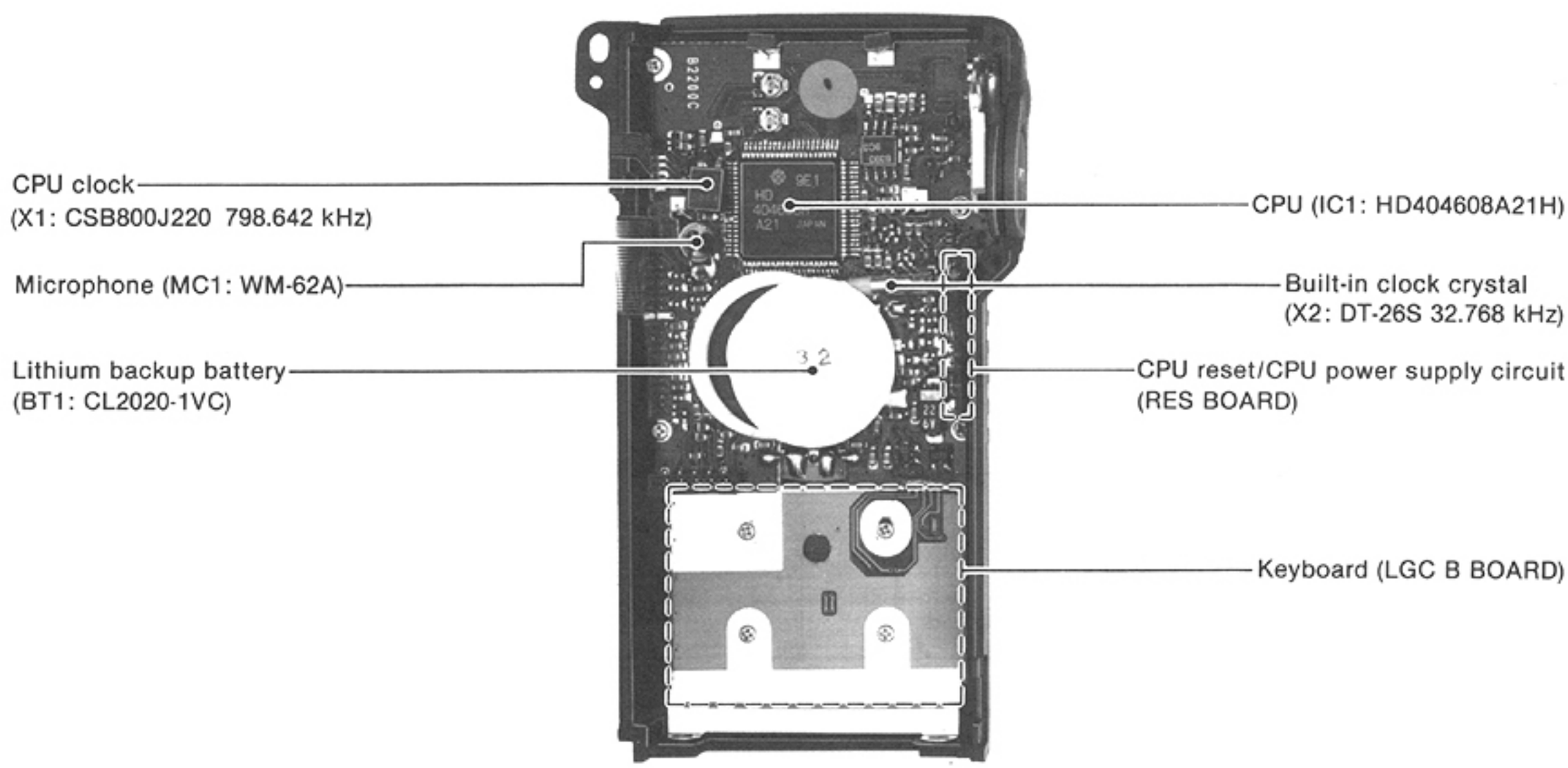

ManualsPlus.com

SECTION 3 BLOCK DIAGRAM

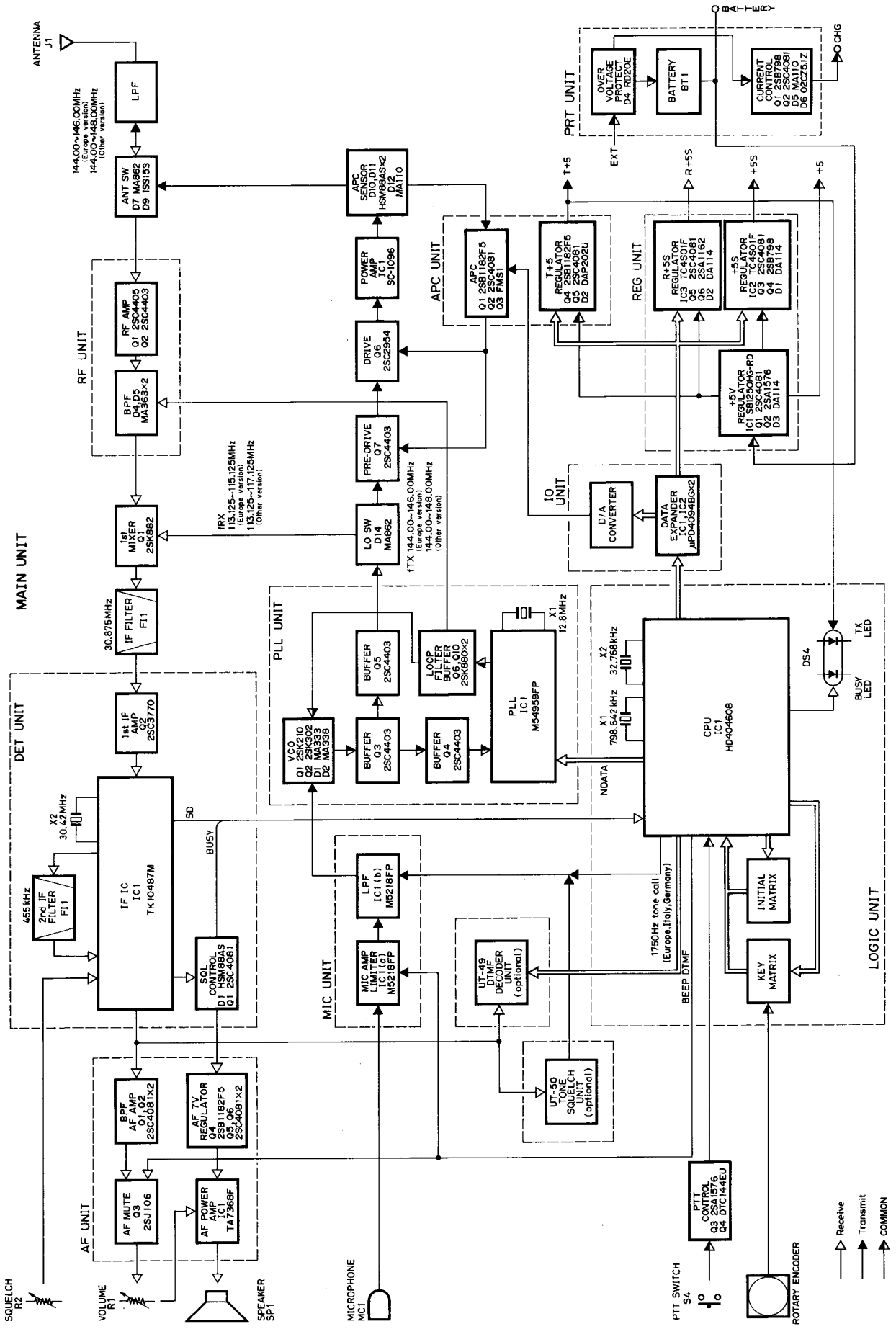

ManualsPlus.com

SECTION 4 CIRCUIT DESCRIPTION

4-1 RECEIVER CIRCUITS

4-1-1 ANTENNA SWITCHING CIRCUIT (MAIN AND APC UNITS)

Received signals enter the antenna connector and pass through a low-pass filter (L2~L4, C21~C25). The signals are applied to the antenna switching circuit (D7, D9, L5, L6, and C26~C28) and then to the RF UNIT via the RFIN signal line. The antenna switching circuit employs a two-stage λ/4-type diode switching system.

The antenna switching circuit functions as a low-pass filter while in receiving and becomes very high impedance while in transmitting.

4-1-2 RF CIRCUIT (RF UNIT)

The signals from the antenna switching circuit pass through a bandpass filter (L1, D2), and are applied to the RF amplifier (Q1, Q2).

Amplified signals are reapplied to the other bandpass filter (L2, L3, D4, D5) to suppress unwanted signals. The signals are applied to the 1st mixer circuit (MAIN UNIT Q1).

D2, D4 and D5 are varactor diodes that track the bandpass filters and are controlled by the PLL lock voltage. These diodes tune the center frequency of the bandpass filters for wide bandwidth reception and good image response rejection.

4-1-3 1ST MIXER CIRCUIT (MAIN UNIT)

The signals from the RF circuit are mixed with the 1st LO signal from the PLL UNIT to produce a 30.875 MHz 1st IF signal.

4-1-4 1ST IF CIRCUIT (MAIN AND DET UNITS)

After passing through the matching circuit (L1), the 1st IF signal is applied to a pair of crystal filters (FI1) to suppress out-of-band signals. The 1st IF signal enters the DET UNIT and is amplified at the IF amplifier (Q2) and then applied to the 2nd mixer circuit.

4-1-5 2ND IF AND DEMODULATOR CIRCUITS (DET UNIT)

The 1st IF signal from Q2 is applied to the 2nd mixer section of IC1, and is mixed with the 2nd LO signal to be converted to a 455 kHz 2nd IF signal.

IC1 contains the 2nd mixer, local oscillator, limiter amplifier and quadrature detector circuits. The local oscillator section and X2 generate 30.42 MHz for the 2nd LO signal.

The 2nd IF signal from the 2nd mixer (IC1, pin 4) passes through the ceramic filter, FI1, where unwanted signals are suppressed. It is then amplified at the limiter amplifier section (IC1, pin 6) and applied to the quadrature detector section (IC1, pin 10 and ceramic discriminator X1) to demodulate the 2nd IF signal into an AF signal.

AF signal output from IC1 pin 11 is applied to the squelch circuit and de-emphasis circuit (R7, C24, C25). This de-emphasis circuit is an integrated circuit with frequency characteristics of −6 dB/octave. The resulting signal is applied to the AF amp, optional tone squelch and optional DTMF decoder circuits.

RECEIVER CIRCUIT BLOCK DIAGRAM

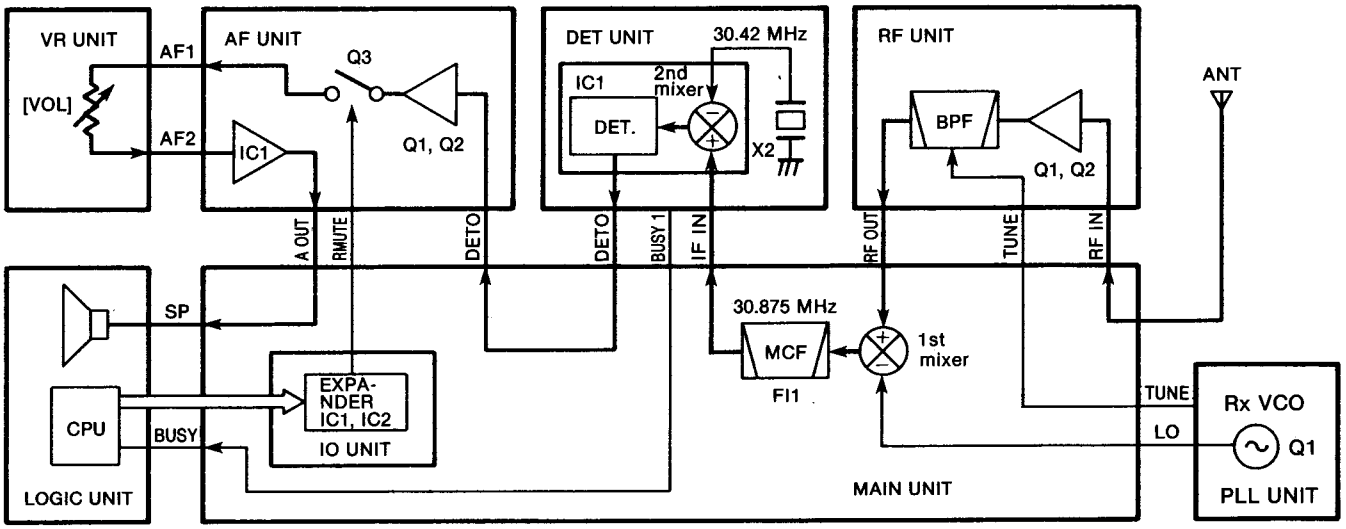

Fig. 1

ManualsPlus.com

4-1-6 AF AMP CIRCUIT (AF AND VR UNITS)

The AF signal is applied to Q1 and Q2 on the AF UNIT. Q1 is an active filter that functions as a high-pass filter to suppress tone signals for the tone squelch operation. Q2 is also an active filter that functions as a low-pass filter to suppress higher noise signals.

The filtered signal is applied to the [VOL] control (R1) on the VR UNIT via the AF mute circuit (Q3). When the squelch is closed, Q3 cuts the AF signal as the AF mute switch. The AF signal is power-amplified at the AF power amplifier (IC1) to drive the speaker.

The AF voltage regulator (Q4~Q6) supplies power to the AF power amplifier. The AFS signal from the MAIN UNIT controls Q6 and mutes AF output while receiving no signal or no specified tone/DTMF signal.

4-1-7 SQUELCH CIRCUIT (DET UNIT)

Some of the noise components in the AF signal from IC1 pin 11 are applied to IC1 pin 13 via C11, R8, C13 and C14. The [SQL] control (R2) on the VR UNIT adjusts the pin 13 input level.

The active filter section in IC1 amplifies noise components of frequencies of 20 kHz and above, and outputs the resulting signals from pin 14. Output signals are rectified by D1 and are converted to DC voltage.

The rectified voltage triggers the squelch switch (Q1). The collector of Q1 outputs the squelch signal. The signal is applied to the CPU (IC1, pin 27) on the LOGIC UNIT through the BUSY signal line. The CPU outputs the RMUTE and BUSY LED signals.

The RMUTE signal, decoded at the output expander (IC1) on the IO UNIT, activates the AF mute circuit (Q3) on the AF UNIT to cut the AF signal. The BUSY LED signal is applied to Q1 on the LOGIC UNIT, turning OFF the receive indicator.

4-2 TRANSMITTER CIRCUITS

4-2-1 MICROPHONE AMPLIFIER (MIC UNIT)

AF signals from the built-in condenser microphone or from the [MIC] jack are applied to IC1 pin 3, and are pre-emphasized to +6 dB/octave through C6 and R4 connected to pin 2. IC1 functions as the microphone amplifier and the limiter.

The output signals from IC1 pin 1 pass through the splatter filter circuit (IC1 pins 5 and 6) where signals of 3 kHz and above are attenuated. IC1 pin 7 then outputs the signals. The signals are applied to the modulation circuit (PLL UNIT, D2) in the VCO to produce an FM signal.

The VCO circuit (Q2, L2, D2) on the PLL UNIT oscillates the transmit frequency with AF signal modulation.

4-2-2 DRIVE AMPLIFIER (MAIN UNIT)

The VCO output, buffer-amplified at Q5 on the PLL UNIT, is applied to the the transmit/receive switching circuit (D14) on the MAIN UNIT. The VCO output is then amplified at the predrive amplifier (Q7) and the drive amplifier (Q6).

The voltage controlled by the APC circuit is applied to the collector of Q6 and Q7 to protect the RF power module from damage by an antenna mismatch.

4-2-3 RF POWER AMPLIFIER (MAIN UNIT)

IC1 is a power module which provides stable 5 W output power.

An RF signal from the drive amplifier (Q6) is applied to IC1 pin 1. The amplified signal is output from pin 4, and applied to the antenna connector through the diode switching and low-pass filter circuits.

TRANSMITTER CIRCUIT BLOCK DIAGRAM

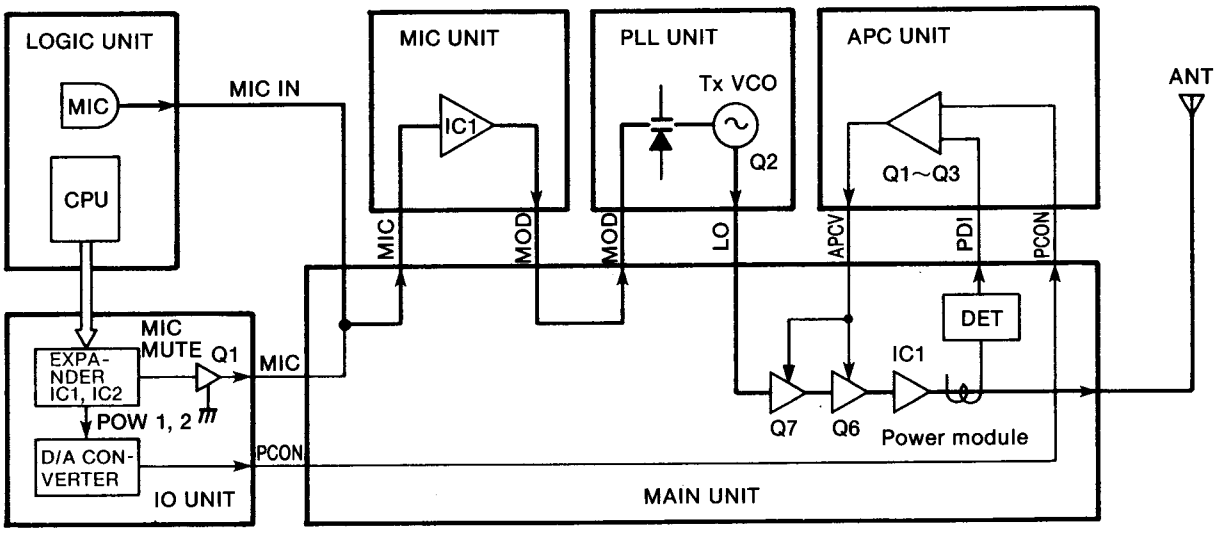

Fig. 2

ManualsPlus.com

4-2-4 APC CIRCUIT (MAIN AND APC UNITS)

The APC circuit protects the power module (IC1) from a mismatched output load and selects HIGH and LOW output power.

The output power level from the power module (IC1) is detected at the APC detector (D10~D12). When antenna impedance is matched at 50 Ω, the detected level is at a minimum. However, when antenna impedance is mismatched, the detected voltage is higher than when matched.

When the antenna impedance is mismatched, the base voltage of Q3b (APC UNIT) is higher than the other base voltage of Q3a (reference voltage). Q3b decreases the collector current of Q1 using Q2. Collector current of Q1 is used at the drive amplifiers (Q6, Q7) on the MAIN UNIT. Hence, when the antenna impedance is mismatched, the output power is decreased.

The output power selecting circuit uses the APC circuit. The PCON voltage from the IO UNIT shifts the reference voltage, changing the output power to HIGH or LOW 1~3.

4-2-5 ANTENNA SWITCHING CIRCUIT (MAIN UNIT)

When transmitting, D7 and D9 are turned ON. The RF output signal is not applied to the receiver circuit, passing through D9 and C60, the low-pass filter (L2~L4, C21 ~C25) and then to the antenna. The low-pass filter suppresses high harmonic components.

4-3 PLL CIRCUITS

4-3-1 GENERAL (PLL UNIT)

The PLL circuit, using a one chip modulus prescaler (IC1), directly generates the transmit frequency with the Tx VCO (Q2) and the 1st LO frequency with the Rx VCO (Q1). The modulus prescaler (IC1) sets the dividing ratio based on serial data from the CPU, and compares the phases of a VCO signal and the reference oscillator frequency. It detects the out-of-step phase and outputs it. The reference frequency is oscillated at X1.

4-3-2 REFERENCE OSCILLATOR CIRCUIT (PLL UNIT)

A reference frequency is produced by the local oscillator section of IC1 and X1. C22 provides frequency control.

4-3-3 LOOP FILTER CIRCUIT (PLL UNIT)

Phase-detected signals from IC1 pin 13 are converted to DC voltage by a lag-lead loop filter (R17, R18, C28, C29).

The frequency at which the VCO oscillates is controlled by varactor diodes (D1, D2). DC voltage (PLL lock voltage) is provided through the buffer amplifier (Q6). Q10 provides Rx bandpass filter tuning.

PLL CIRCUIT

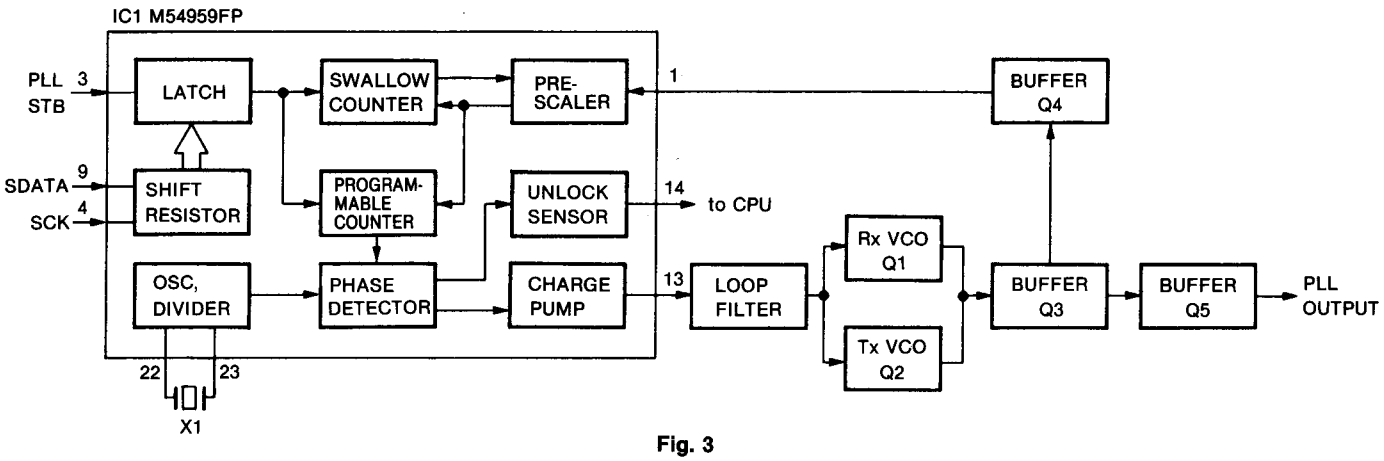

Fig. 3

4-3-4 VCO CIRCUIT (PLL UNIT)

IC-2SAT/SET has 2 VCO circuits for transmitting and receiving. IC1 pins 10 and 11 output control signals for selecting the receive VCO circuit (Q1, L1, D1) or transmit VCO circuit (Q2, L2, D2). Varactor diodes (D1, D2) provide frequency control. The buffer amplifiers (Q3~Q5) do not affect the PLL output signal from VCO oscillation. Q7 selects the transmit or receive VCO circuit.

4-3-5 UNLOCK SENSOR CIRCUIT (PLL UNIT)

When the PLL circuit is unlocked, IC1 pin 14 is "HIGH" and the "HIGH" signal is applied to the CPU pin 7 as an unlock signal.

ManualsPlus.com

4-4 POWER SUPPLY CIRCUITS

4-4-1 VOLTAGE LINES

LINE	DESCRIPTION
Vcc	The internal or attached battery pack voltage or external DC power passed through the power switch.
+5	Common 5 V converted from the Vcc line at Q1 and Q2 on the REG UNIT using IC1 as the reference voltage.
+5S	5 V controlled by the power saver function. This voltage is converted from Vcc at Q3 and Q4 on the REG UNIT using IC2 output as the reference voltage.
R+5S	Receive 5 V controlled by the power saver function and SEND signal line. This voltage is converted from Vcc at Q5 and Q6 on the REG UNIT using IC3 output as the reference voltage.
T+5	Transmit 5 V controlled by the TMUTE signal line. This voltage is converted from Vcc at Q4 and Q5 on the APC UNIT.
AF 7 V	AF amp power source controlled by the AFS signal line. R14/R15 provides reference voltage.

4-4-2 CPU POWER SUPPLY CIRCUIT (LOGIC UNIT)

When the power switch is turned OFF and the internal/external battery pack is discharged, a voltage is applied to the CPU (IC1) pin 73 via R29 from the lithium backup battery (BT1) installed in the transceiver to provide backup for the memory contents.

When the internal or attached battery pack voltage or external DC power is applied to the transceiver, BT1 is charged using the current regulator (Q3).

4-4-3 +5S AND R+5S SWITCHING CIRCUITS (REG UNIT)

The IC-2SAT/SET has a power saver to reduce current consumption to approx. 1/4.

The PSC (Power Saver Control) signal is applied to IC2. IC2 controls +5S regulator (Q3, Q4, D1) to turn ON and OFF +5S voltage.

PSC and SEND signals are applied to IC3. IC3 controls R+5S regulator (Q5, Q6, D2). R+5S turns OFF during power saved period or transmitting.

4-4-4 CHARGING CIRCUIT (PRT UNIT)

Voltage from the [DC 13.8V] jack is applied to current control circuit (Q1, Q2, D5, D6) to charge an internal or attached battery pack (except the BP-85).

When the external battery pack is attached, the current from D2 charges the attached battery pack. When the external battery pack is removed, the current from D2 charges the internal battery pack.

The mechanical switch (MP7) selects the battery packs. This circuit charges one of the battery packs in approx. 15 hours.

Over voltage protector (D4) decreases the transceiver circuit damage from over voltage and reverse polarity connections of the power supply.

4-5 OTHER CIRCUITS

4-5-1 S/RF INDICATOR CIRCUIT (DET, MAIN AND LOGIC UNITS)

A portion of the 2nd IF signal is output from IC1 pin 12 on the DET UNIT via the SD signal line. The signal is rectified at D1 on the MAIN UNIT to obtain an S-indicator signal. The S-indicator signal is applied to IC2b pin 5 on the LOGIC UNIT.

IC2b pin 6 receives an S-indicator reference signal from the CPU KEYS0~3 terminals via the D/A converter (R11, R37~R40). The CPU terminals increase the reference signal level.

When the D/A converted level becomes greater than the S-indicator level, IC2b pin 7 becomes "LOW." The CPU detects the signal strength level using the KEYS0~3 terminal outputs and indicates the signal strength level on the function display when receiving the "LOW" signal.

While transmitting, the S/RF indicator indicates the selected output power.

S INDICATOR CIRCUIT

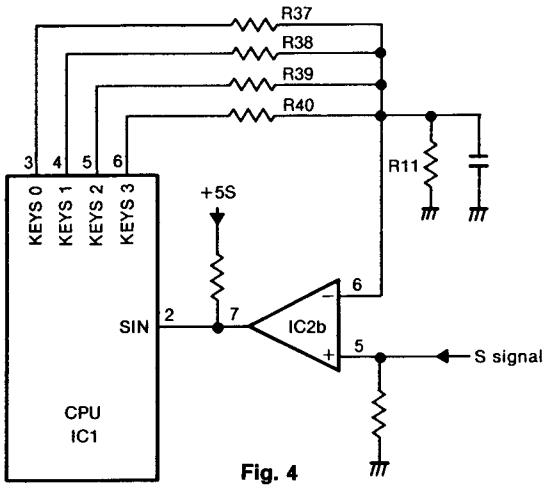

Fig. 4

4-5-2 DISPLAY BACKLIGHT CIRCUIT (LOGIC UNIT)

When the [LIGHT] switch is pushed, pin 77 of the CPU outputs "HIGH." The signal is applied to Q1 to light up the backlight LEDs (DS2, DS3).

ManualsPlus.com

• OUTPUT PORT

PORT NUMBER	PIN NUMBER	DESCRIPTION
D0 [LAMP0]	77	Becomes "HIGH" when the backlight LEDs light up.
D1 [BUSY LED]	78	Outputs a signal for lighting up in green the transmit/receive indicator. This port becomes "LOW" while receiving. (squelch opens)
D2 [TONE OUT]	79	Outputs a 1750 Hz tone signal. (IC-2SET only)
D3 [TOE]	80	Outputs an enable signal for the UT-49.
D6~D9 [KEYS0~ KEYS3]	3~6	Outputs a strobe signal for the keyboard, initial and key matrices and D/A converter counting signal alternately in an interval.
R00 [SCK]	15	Outputs clock signals for serial data.
R01 [IO STB]	16	Outputs a strobe signal for serial data to the expander ICs.
R02 [SDATA]	17	Outputs serial data synchronized with the SCK signal.
R03 [PLL STB]	18	Outputs a strobe signal for serial data to the PLL IC.

• OUTPUT EXPANDER (IO UNIT, IC1)

PORT NUMBER	PIN NUMBER	DESCRIPTION
Q1 [AF ON]	4	Outputs an AF mute signal for AF power amplifier.
Q2 [MIC MUTE]	5	Outputs a microphone mute signal. When transmitting a tone signal, the MIC signal line goes to ground.
Q3 [RMUTE]	6	Outputs a receive mute signal for the AF mute circuit. When emitting a beep tone, this port outputs the mute signal and the AF ON port does not output it.
Q4 [TMUTE]	7	Outputs a control signal for T+5 V regulator.
Q5 [SEND]	14	Outputs transmit/receive switching signals. This port becomes "LOW" while transmitting.
Q6 [PSC]	13	This port becomes "HIGH" while the power saver function is activated.
Q7 [CPC]	12	Outputs a control signal to cut off the loop filter while the power saver function is activated.
Q8 [MODE]	11	Outputs a mode signal.

• OUTPUT EXPANDER (IO UNIT, IC2)

PORT NUMBER	PIN NUMBER	DESCRIPTION
Q2, Q3 [BA2, BA3]	5, 6	Outputs a control signal for the RF bandpass filter.
Q5, Q6 [POW 1, POW 2]	13, 14	Outputs a control signal for the output power selecting circuit. This signal is converted into PCON voltage (APC reference voltage) using the D/A converter (R2~R6).

ManualsPlus.com

4-5-3 1750 Hz TONE CALL CIRCUITS (LOGIC UNIT)

Only the IC-2SET is equipped with this function.

When the [PTT] switch is quickly pushed 2 times or when the [PTT] switch is pushed with the [LIGHT] switch, pin 79 of the CPU (TONE OUT) outputs a 1750 Hz tone signal. R15 adjusts the 1750 Hz tone deviation. The signal is also output to the AF UNIT via R12.

4-5-4 SUBAUDIBLE TONE ENCODER CIRCUIT

This function can be activated only when an optional UT-50 TONE SQUELCH UNIT or UT-51 PROGRAMMABLE TONE ENCODER UNIT is installed.

A tone signal is applied to the splatter filter circuit on the MIC UNIT via the TONE signal line. R10 on the UT-50 and R5 on the UT-51 adjust the subaudible tone deviation.

4-5-5 DTMF ENCODER CIRCUIT (LOGIC UNIT)

This function can be activated only when the matrix KEYS1 → KEYI1 is OPEN. (an optional UT-49 DTMF DECODER UNIT is installed.)

Pins 70 and 71 of the CPU (TONEC/TONER) output a DTMF code signal. R16 adjusts the DTMF code signal deviation. The signal is also output to the AF UNIT via R17.

4-5-6 CPU RESET CIRCUIT (LOGIC UNIT)

IC3 detects +5 voltage. When the +5 voltage line becomes 5 V, IC3 turns INT0 "HIGH" and the CPU (IC1) restarts operation.

The CPU is reset when IC1 pin 76 becomes "HIGH." The AND gate IC (IC4) outputs a reset signal when both input terminals are "HIGH." One terminal is "HIGH" when the [MONI] switch is pushed and the other (INT0 line) is "HIGH" when the power is turned ON.

RESET CIRCUIT

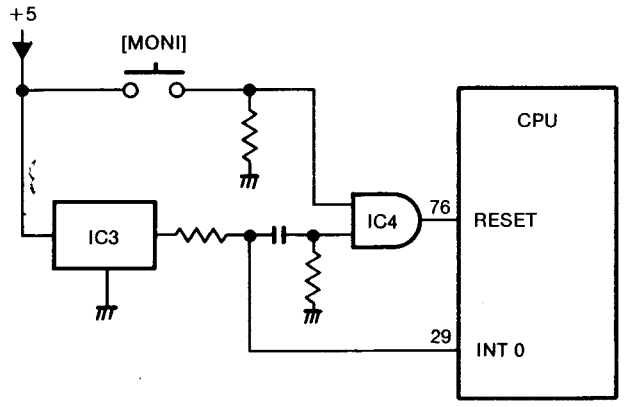

Fig. 5

4-5-7 TRANSMIT/RECEIVE INDICATOR CIRCUIT (LOGIC UNIT)

The transmit/receive indicator (DS4) uses a 2-input LED and lights up in red or green.

The indicator lights up in red as the transmit indicator while transmitting using the T+5 voltage.

The indicator lights up in green as the busy indicator while the squelch opens using CPU pin 78 output via the inverter (Q2).

4-5-8 CLOCK OSCILLATOR CIRCUIT (LOGIC UNIT)

IC1 oscillates the 798.642 kHz CPU system clock signal using X1. IC1 oscillates the 32.768 kHz clock signal for the built-in clock using X2.

4-6 CPU PORT ALLOCATIONS (LOGIC UNIT)

• INPUT PORT

PORT NUMBER	PIN NUMBER	DESCRIPTION
D4 [PTT]	1	Inputs a signal on the PTT line. This port becomes "LOW" when the PTT switch is pushed.
D5 [SIN]	2	Inputs S-meter-compared signal from IC2b to indicate the CPU counting level to the S-indicator in the function display.
D10 [UL]	7	Detects a PLL unlock signal. When the signal is "HIGH," the PLL is unlocked.
D12, D13 [DIAL UP/DN]	9, 10	Input port for the up/down signal of the tuning control.
R10~R13 [KEYI0~ KEYI3]	19~22	These are input ports for the initial and key matrices.
R20~R23 [KEYR0~ KEYR3]	23~26	These are input ports for the keyboard and DTMF code from the UT-49.
R30 [BUSY]	27	Detects a squelch signal. The signal is "HIGH" when the squelch opens.
R31 [OPT]	28	Input port for an optional unit. This port becomes "HIGH" when the tone squelch opens. (UT-50) This port becomes "LOW" when the UT-51 is installed.
R32 [INT0]	29	Detects a signal for the standby mode of the CPU. The CPU enters the standby mode when the port becomes "LOW."
R33 [INT1]	30	The CPU decodes received DTMF code when this port becomes "LOW."

ManualsPlus.com

SECTION 5 MECHANICAL PARTS AND DISASSEMBLY

5-1 FRONT PARTS

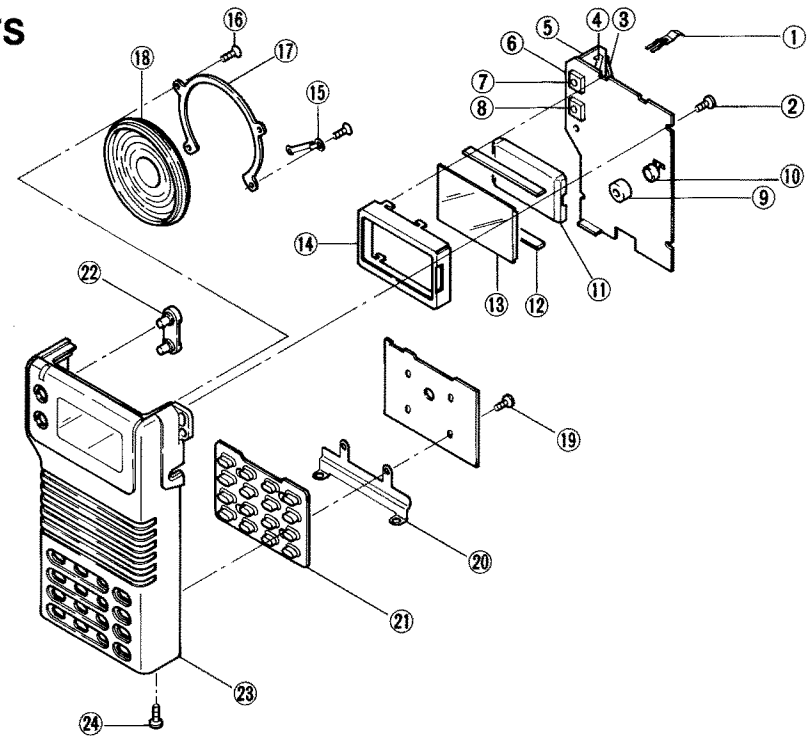

LABEL NUMBER	ORDER NO.	DESCRIPTION	QTY.	LABEL NUMBER	ORDER NO.	DESCRIPTION	QTY.
①	8930016400	756 LOGIC Ground spring plate	2	⑮	8930016410	756 Speaker ground lag	1
②	8810001700	Screw PH B0 No. 0-3 M1.4×3	4	⑯	8810005740	Screw FH B0 No. 0 M2×3	4
③	8930015790	PTT Ground spring plate	1	⑰	8930014810	752 Speaker plate	1
④	8930014880	752 P.C. Board holder	1	⑱	2510000450	Speaker EAS-3P123D	1
⑤	2230000770	Switch [F] SW-104 (SKHUPE004B)	1	⑲	8810001700	Screw PH B0 No. 0-3 M1.4×3	4
⑥	2230000770	Switch [PTT] SW-104 (SKHUPE004B)	1	⑳	8510006050	Key shield	1
⑦	2260001150	Switch [H/L/DTMF] SW-103 (SKHUPC007B)	1	㉑	8010009080	756 Keyboard	1
⑧	2260001150	Switch [MONI] SW-103 (SKHUPC007B)	1	㉒	8610005970	Knob K138 [H/L/DTMF], [MONI]	2
⑨	8930014940	752 MIC holder	1	㉓	8210005090	756 Front panel (A) IC-2SAT (incl. Front plate and 756 lens)	1
⑩	7700000860	Microphone WM-62A	1				
⑪	8010009070	756 Reflector plate	1		8210005100	756 Front panel (B) IC-2SET (incl. Front plate and 756 lens)	1
⑫	8930015920	LCD contact strip SRCN-756	2				
⑬	6910003910	LCD LCD2439 (incl. shield)	1	㉔	8810000530	Screw PH No. 0 M2×5 ZK	2
⑭	8930015960	756 LCD holder	1				

Screw abbreviations PH: Pan head B0: Self-tapping screw ZK: Black

• ACCESSORIES

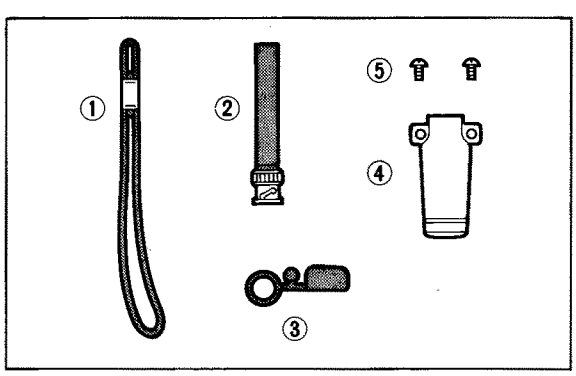

LABEL NUMBER	ORDER NO.	DESCRIPTION	QTY.
①	8010008970	Handstrap HK-002	1
②	Optional product	FA-140BB FLEXIBLE ANTENNA	1
③	8930014960	752 Rainproof cap	1
④	8010008620	752 Belt clip	1
⑤	8810005730	Screw BuH M3×3 ZK BS	2

Screw abbreviations BuH: Button head
BS: Brass ZK: Black

ManualsPlus.com

5-2 CHASSIS PARTS

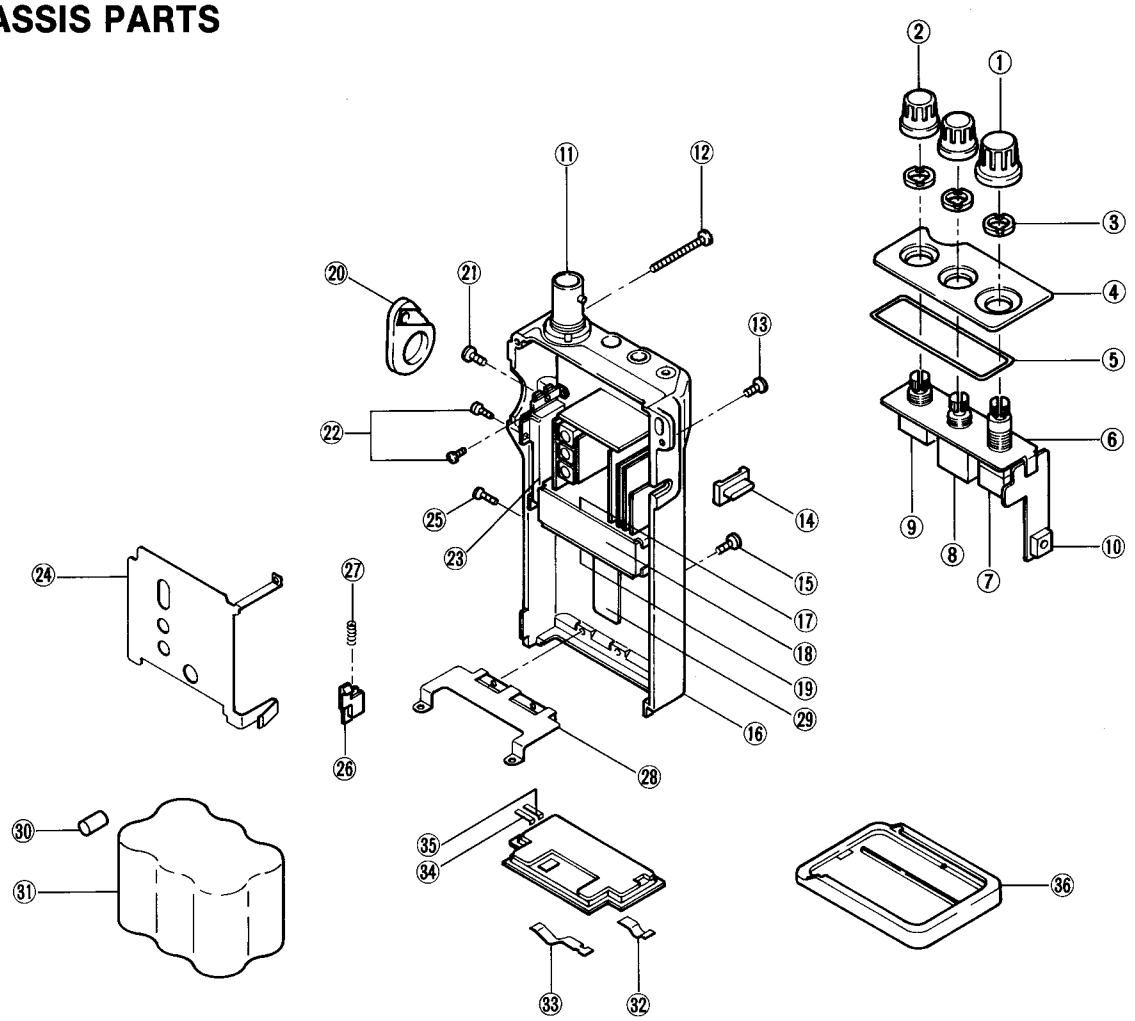

LABEL NUMBER	ORDER NO.	DESCRIPTION	QTY.	LABEL NUMBER	ORDER NO.	DESCRIPTION	QTY.
①	8610005790	Knob N147 [TUNING]	1	⑱	8510005850	752 PLL case	1
②	8610005780	Knob N146 [SQUELCH], [PWR/VOL]	2	⑲	8510005820	751 PLL cover	1
③	8830000550	VR nut (E)	3	⑳	8930015940	756 PTT switch rubber	1
④	8210005070	756 TOP panel	1	㉑	8810000120	Screw PH M2.6×3	1
⑤	8930014950	752 TOP seal	1	㉒	8810005860	Screw PH No. 0 M2×3 Ni	5
⑥	8930014801	752 VR plate-1	1	㉓	8930014840	752 Module shield plate	1
⑦	2260000890	Rotary switch [TUNING] SRBM1L040A	1	㉔	8510005860	751 MAIN shield plate	1
⑧	7210001440	Variable resistor [PWR/VOL] RK097111101NA (10KA)	1	㉕	8810005700	Screw PH No. 0 M2×4 ZK	1
				㉖	8930014922	752 Release button-2	1
⑨	7210001450	Variable resistor [SQUELCH] RK0971110051A (10KB)	1	㉗	8930014820	Release spring (M)	1
				㉘	8930015980	Joint plate	1
⑩	2260001150	Switch [LIGHT] SW-103 (SKHUPC007B)	1	㉙	8930016570	756 BP holder plate	1
⑪	6510008620	Antenna connector BNC-RM-F	1	㉚	8930016590	BP rubber	1
⑫	8810005720	Screw PH B0 M2×20 ZK	2	㉛	3030000270	NiCd battery P-03ER/F23G1	1
⑬	8810000100	Screw PH M2×4 ZK	1	㉜	8930014852	752 Battery terminal-2	3
⑭	8930014911	Light switch-1 rubber	1	㉝	8930016583	756C terminal-3	1
⑮	8810005890	Screw FH M2×4 ZK	2	㉞	8930016970	756A Contact	1
⑯	8010009064	756 Rear panel-4	1	㉟	8930016980	756B Contact	1
⑰	8510005830	CO-PLL cover	1	㊱	Optional product	BA-11 BOTTOM CAP	1

Screw abbreviations PH: Pan head FH: Flat head B0: Self-tapping screw ZK: Black Ni: Nickel

ManualsPlus.com

SECTION 6 ADJUSTMENT PROCEDURES

6-1 PREPARATION BEFORE SERVICING

■ REQUIRED TEST EQUIPMENT

EQUIPMENT	GRADE AND RANGE
AC power supply	Output voltage : 13.8 V DC Current capacity : 2 A or more
RF power meter (terminated type)	Measuring range : 1~10 W Frequency range : 120~160 MHz Impedance : 50 Ω SWR : Less than 1.2 : 1
Frequency counter	Frequency range : 0.1~160 MHz Frequency accuracy : ±1 ppm or better Sensitivity : 100 mV or better
Oscilloscope	Frequency range : DC~20 MHz Measuring range : 0.01~10 V
Standard signal generator (SSG)	Frequency range : 0.1~160 MHz Output level : −127~−17 dBm (0.1 μV~32 mV)
DC voltmeter	Input impedance : 50 kΩ/DC or better
AC milli-voltmeter	Measuring range : 10 mV~10 V
External speaker	Impedance : 8 Ω
Audio generator	Frequency range : 300~3000 Hz Output level : 1~500 mV
Attenuator	Power attenuation : 30 or 40 dB Capacity : 10 W or more
Distortion meter	Measuring range : 0.1~20 %
FM deviation meter	Frequency minimum : 160 MHz Measuring range : 0~±10 kHz

■ CONNECTION

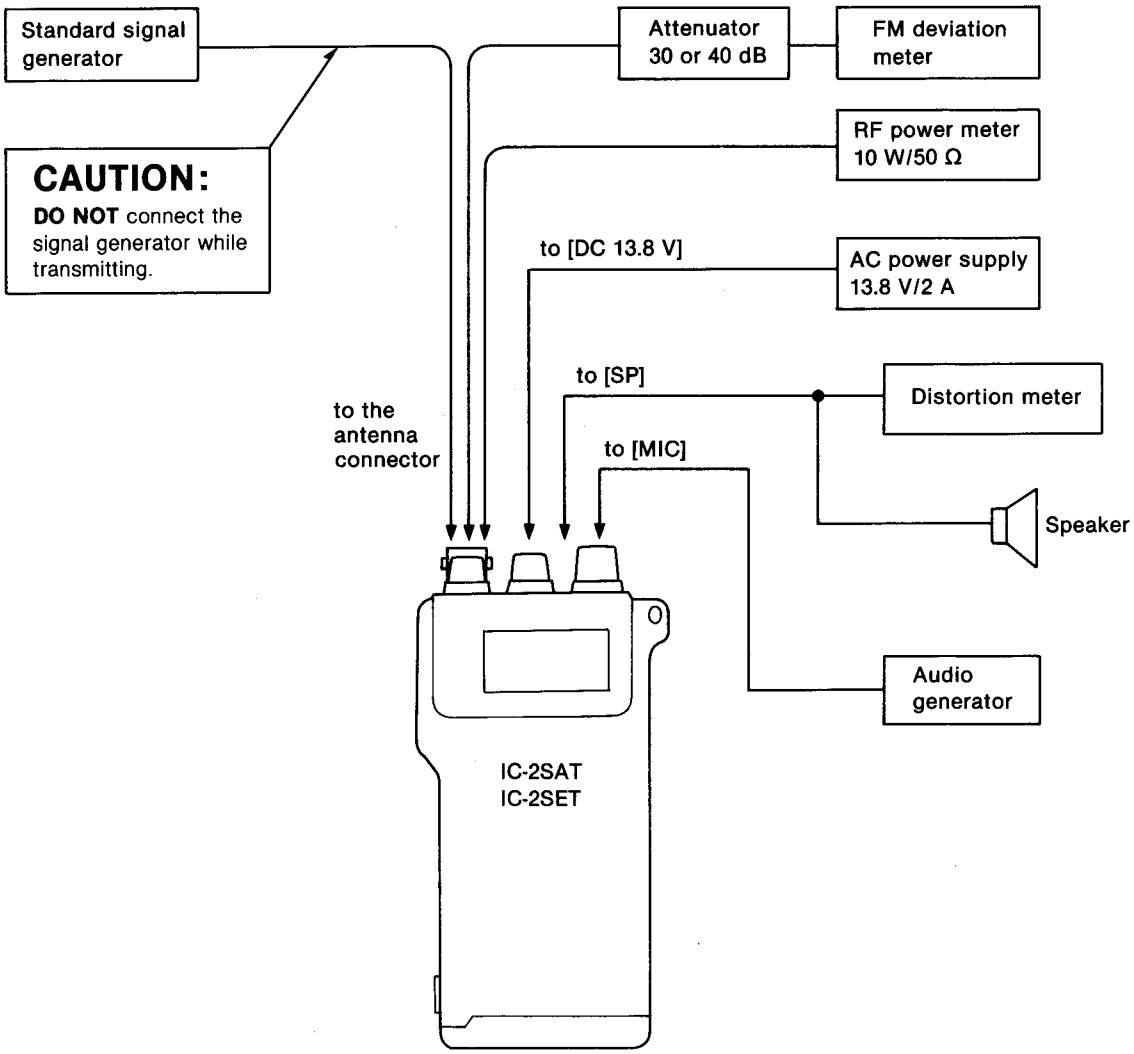

ManualsPlus.com

6-2 PLL ADJUSTMENT

ADJUSTMENT		ADJUSTMENT CONDITIONS	MEASUREMENT		VALUE	ADJUSTMENT POINT	
			UNIT	LOCATION		UNIT	ADJUST
LOCK VOLTAGE	1	• Displayed frequency: 145.00 MHz • Simplex • Transmitting	PLL	Connect the oscilloscope to C6. (L2 side)	1.6 V DC	PLL	L2
	2	• Receiving			1.6 V DC		L1
	3	Install the shielding plate. Readjust L2 and L1 when the lock voltage is changed.					
REFERENCE FREQUENCY	1	• Displayed frequency: 146.00 MHz • Connect the RF power meter or a 50 Ω dummy load. • Transmitting	Top panel	Loose couple the frequency counter to the antenna connector.	146.0000 MHz	PLL	C22

PLL UNIT

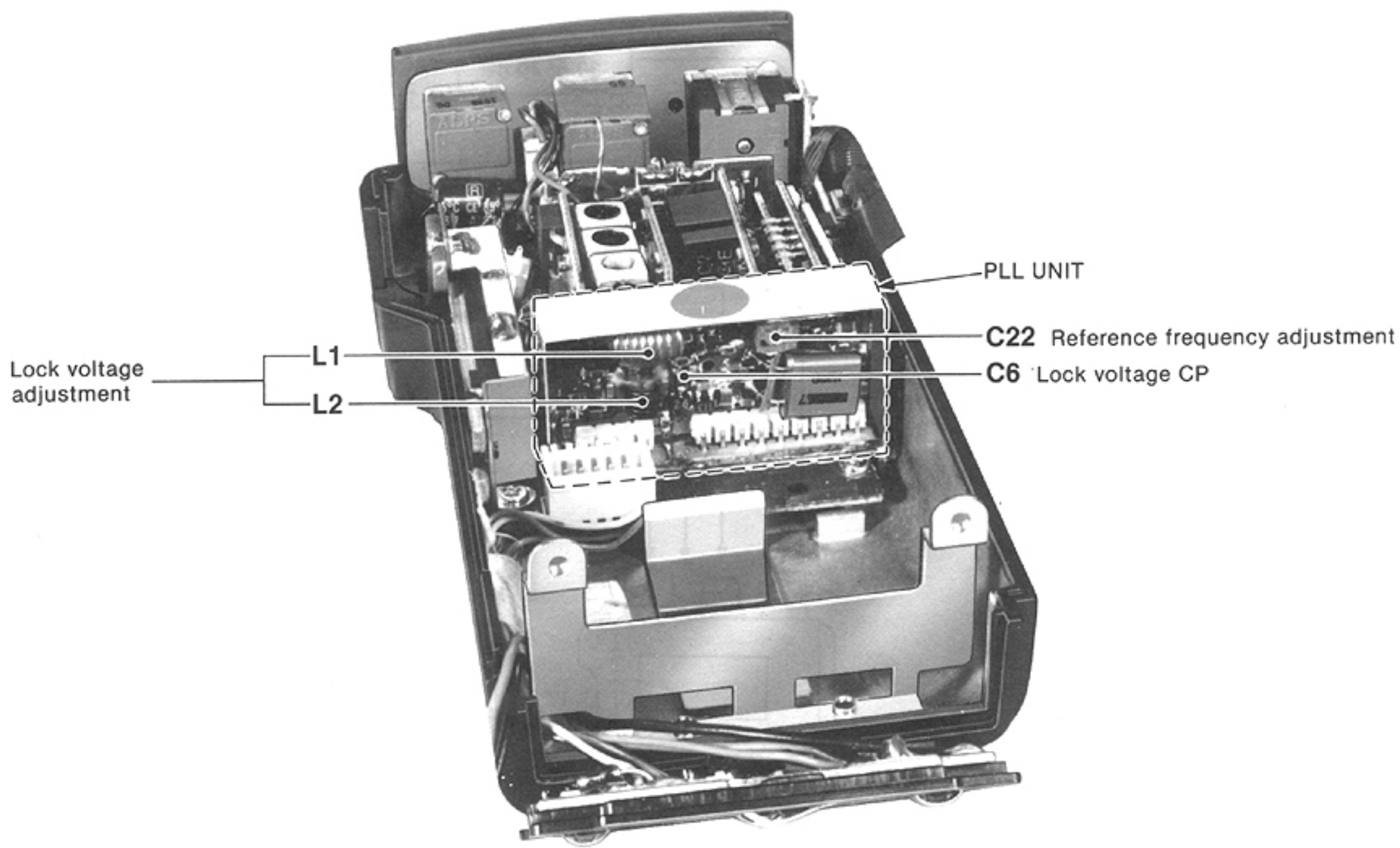

ManualsPlus.com

6-3 RECEIVER ADJUSTMENT

ADJUSTMENT		ADJUSTMENT CONDITIONS	MEASUREMENT		VALUE	ADJUSTMENT POINT	
			UNIT	LOCATION		UNIT	ADJUST
SENSITIVITY	1	• Displayed frequency: 145.00 MHz • [SQL] control : Max. CCW • Set the signal generator; Level : 0.32 µV (−117 dBm) Modulation: 1 kHz Deviation : ±3.5 kHz • Receiving	LOGIC	Connect the DC voltmeter to the land of the S line.	Maximum	RF	L1, L2, L3
						MAIN	L1
	2		Top panel	Connect the distortion meter with an 8 Ω load to the [SP] jack.	Minimum	RF	L2
S-METER	1	• Displayed frequency: 145.00 MHz • Set the signal generator; Level : 0.32 µV (−117 dBm) Modulation: 1 kHz Deviation : ±3.5 kHz • Receiving	Function display	S/RF indicator	2 bars (S2)	DET	R5

LOGIC, RF, MAIN AND DET UNITS

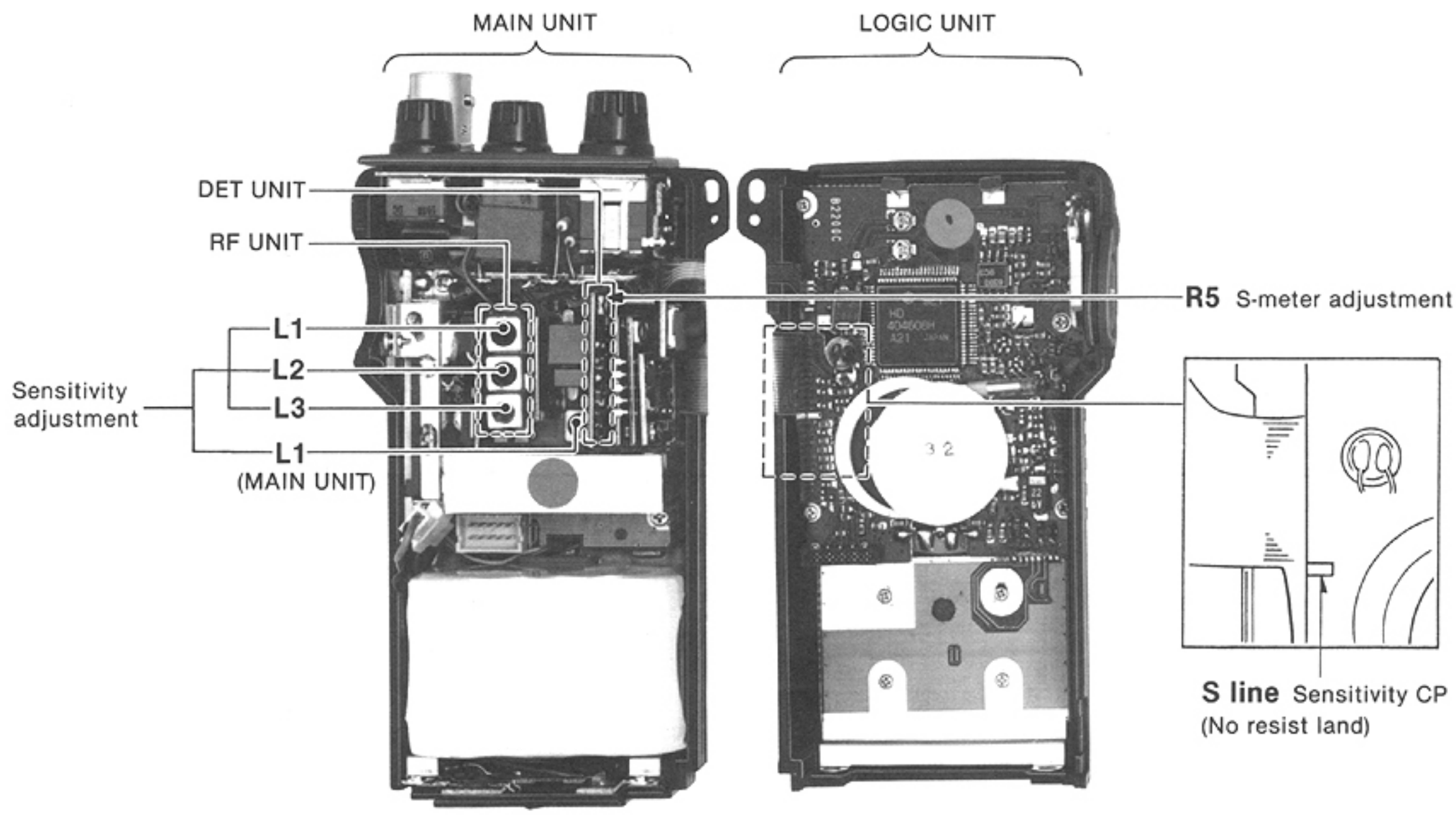

ManualsPlus.com

6-4 TRANSMITTER ADJUSTMENT

ADJUSTMENT		ADJUSTMENT CONDITIONS	MEASUREMENT		VALUE	ADJUSTMENT POINT	
			UNIT	LOCATION		UNIT	ADJUST
OUTPUT POWER	1	• Displayed frequency: 145.00 MHz • Output power : HIGH • Simplex • Transmitting	Top panel	Connect the RF power meter to the antenna connector.	5.0 W	IO	R5
	2	• Output power : LOW 1			0.25~1.0 W		Verify
	3	• Output power : LOW 2			Approx. 1.5 W		Verify
	4	• Output power : LOW 3			Approx. 3.5 W		Verify
FREQUENCY DEVIATION	1	• Displayed frequency: 145.00 MHz • Output power : HIGH • Apply an AF signal to the [MIC] jack. 75 mV/1 kHz (except U.S.A.) 170 mV/1 kHz (U.S.A.) • Set the FM deviation meter. HPF : 50 Hz LPF : 20 kHz De-emphasis: OFF Detector : (P-P)/2 • Transmitting	Top panel	Connect the FM deviation meter to the antenna connector via the attenuator.	±4.8 kHz	MIC	R13
DTMF TONE FREQUENCY DEVIATION	1	• Displayed frequency: 145.00 MHz • Push and hold the [PTT] switch and then push the [D] key.	Top panel	Connect the deviation meter to the antenna connector via the attenuator.	±3.5 kHz	LOGIC	R16
TONE CALL FREQUENCY DEVIATION (IC-2SET only)	1	• Displayed frequency: 145.00 MHz • Push and hold the [LIGHT] switch and then push the [PTT] switch.	Top panel	Connect the deviation meter to the antenna connector via the attenuator.	±3.5 kHz	LOGIC	R15

ManualsPlus.com

IO AND MIC UNITS

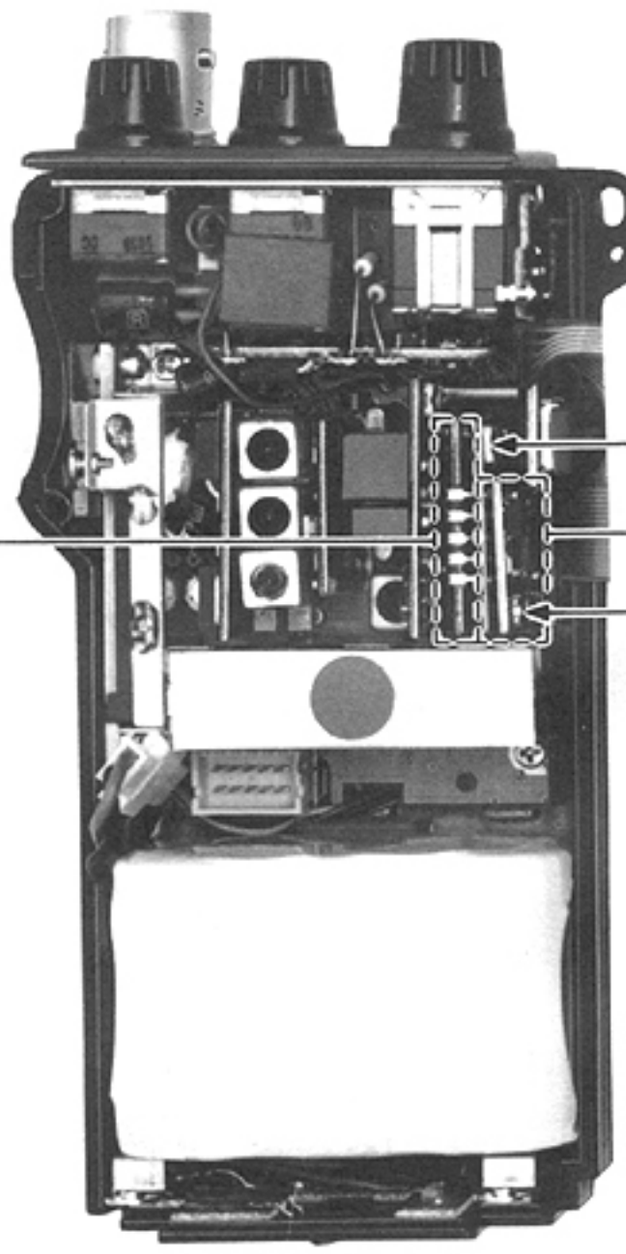

LOGIC UNIT

ManualsPlus.com

SECTION 7 BOARD LAYOUTS

7-1 LOGIC (LGC) UNIT

• TUNING BOARD

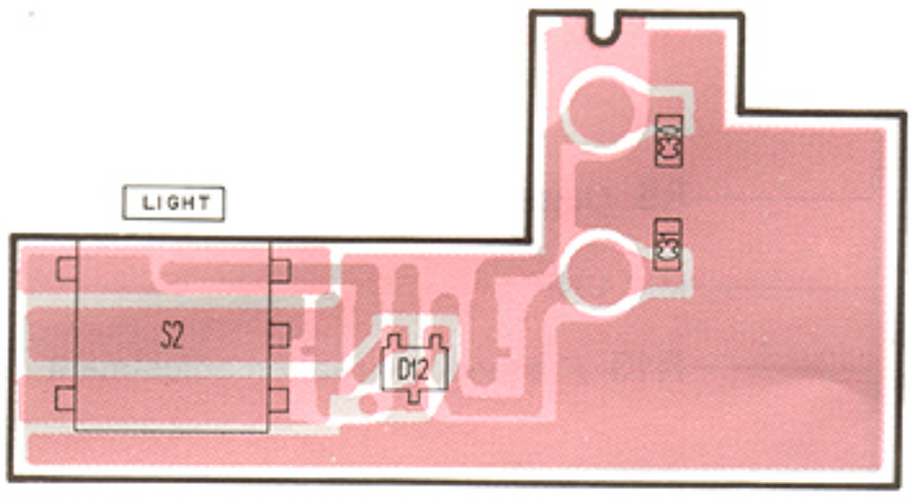

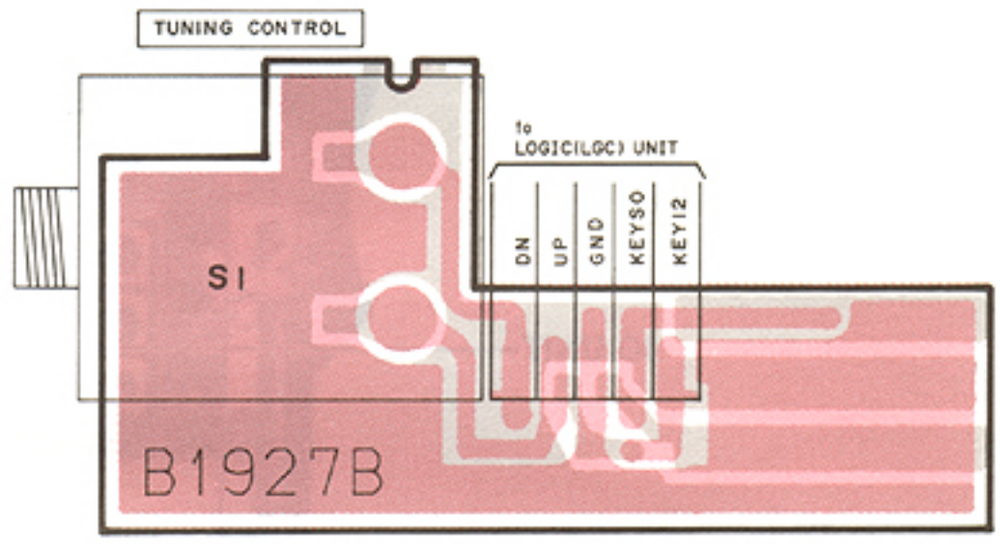

• VR UNIT

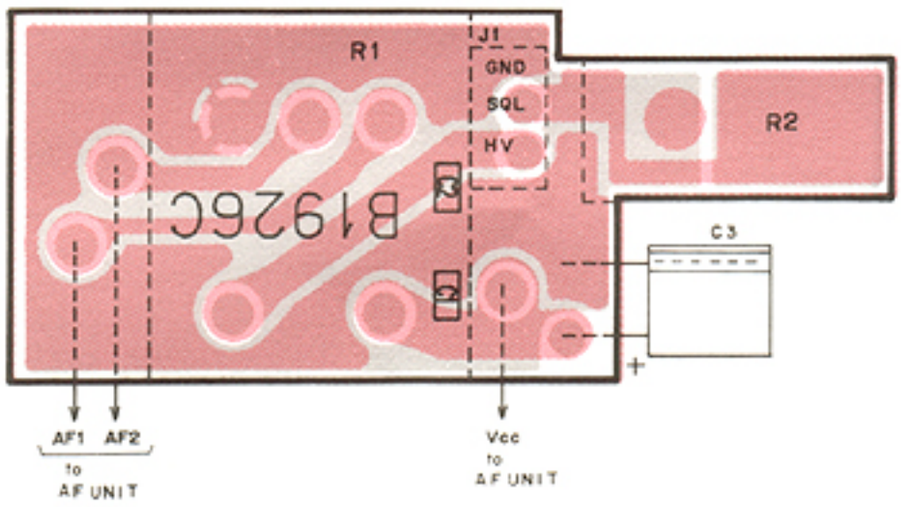

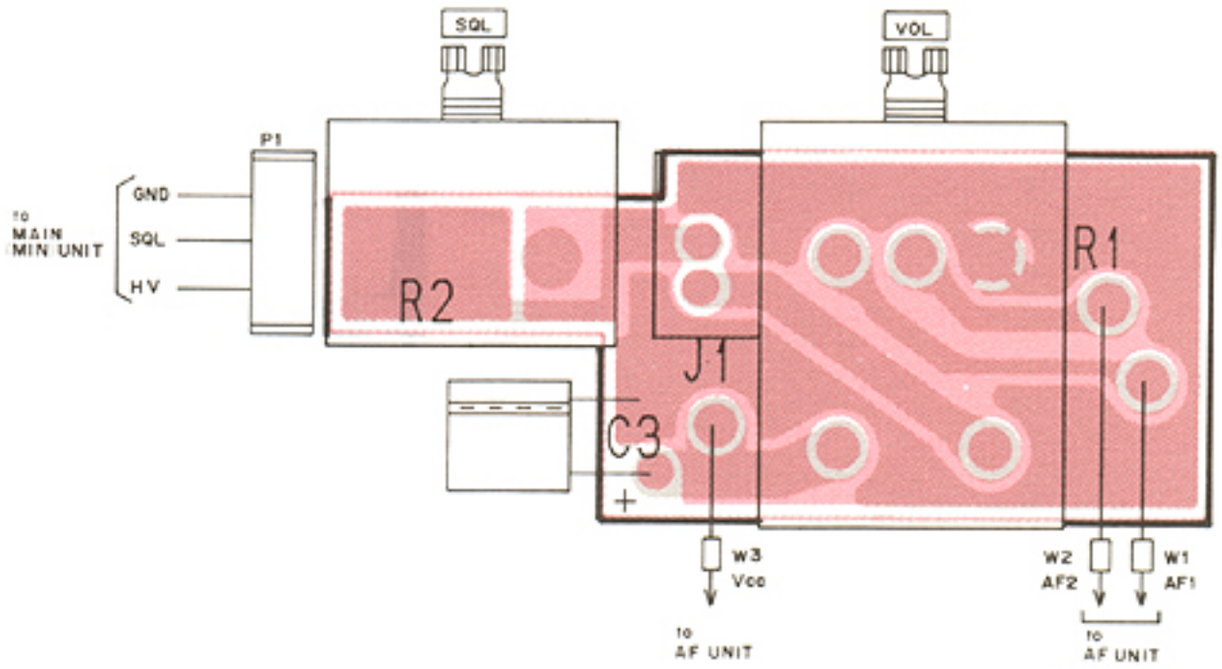

• RES BOARD

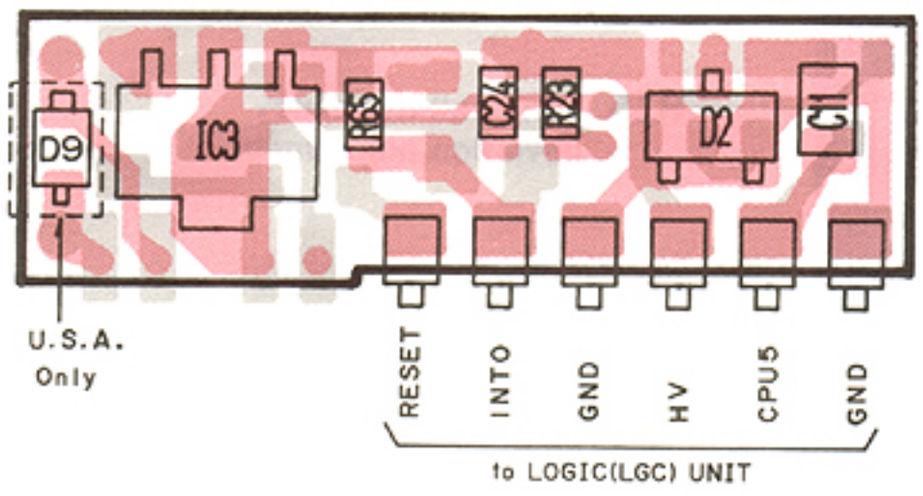

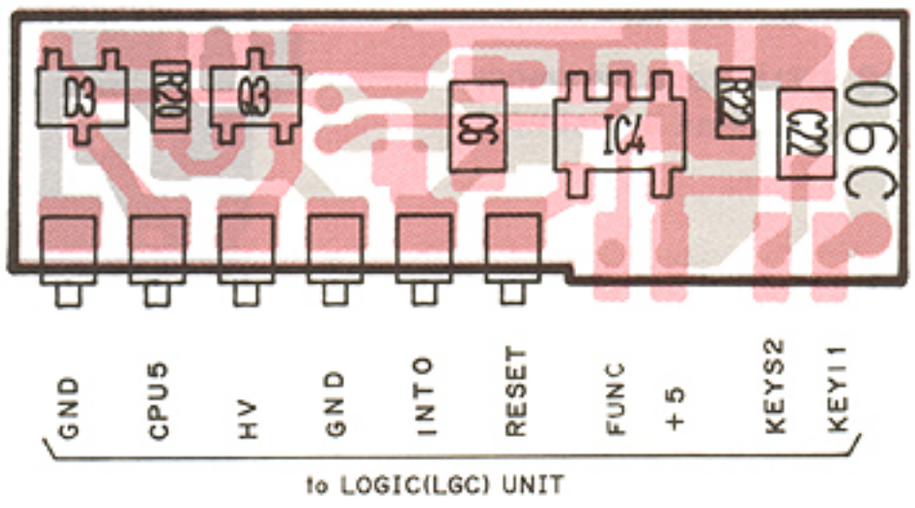

• PTT BOARD

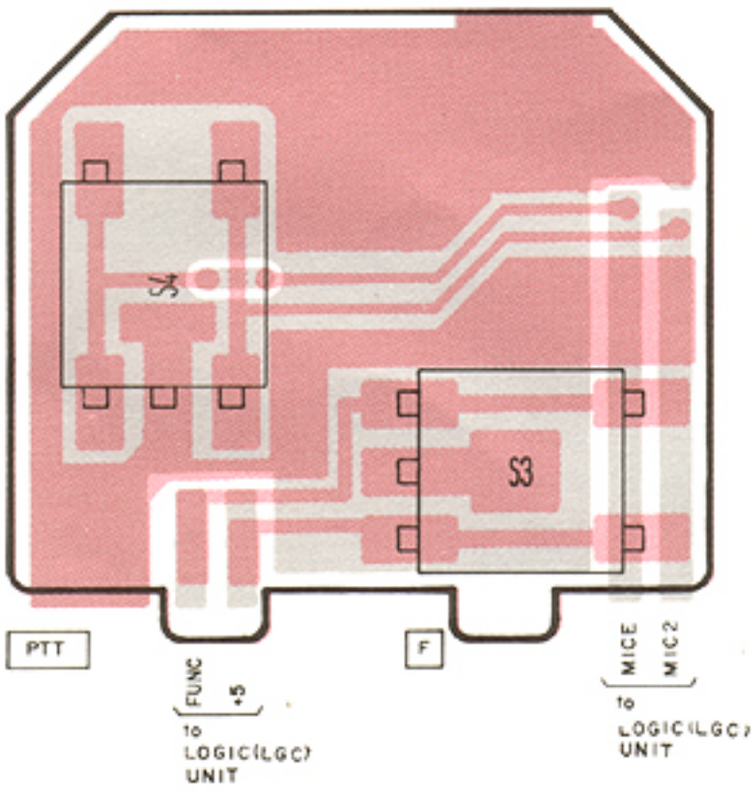

• LGC B BOARD

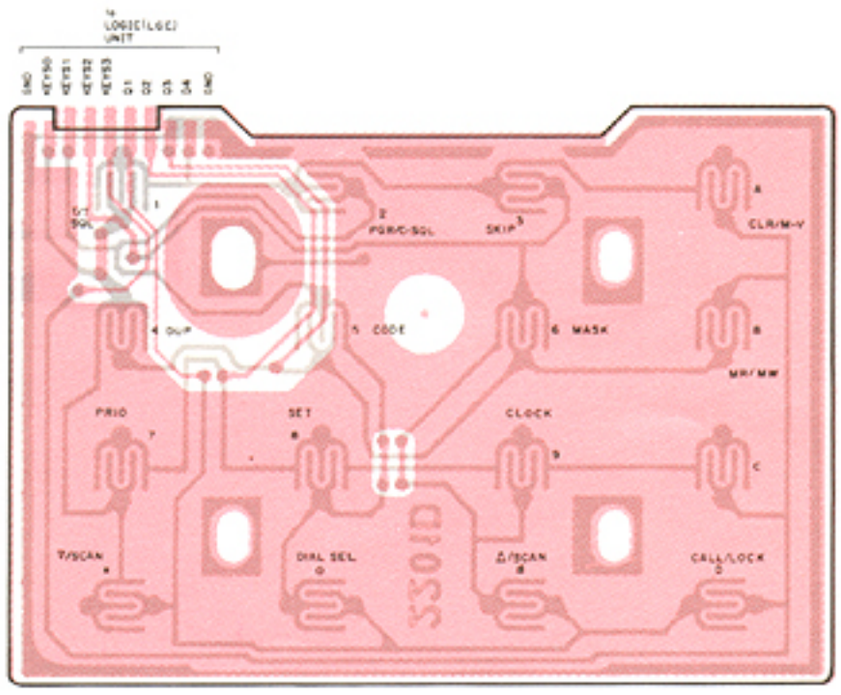

ManualsPlus.com

- **LOGIC (LGC) UNIT**

(TOP VIEW)

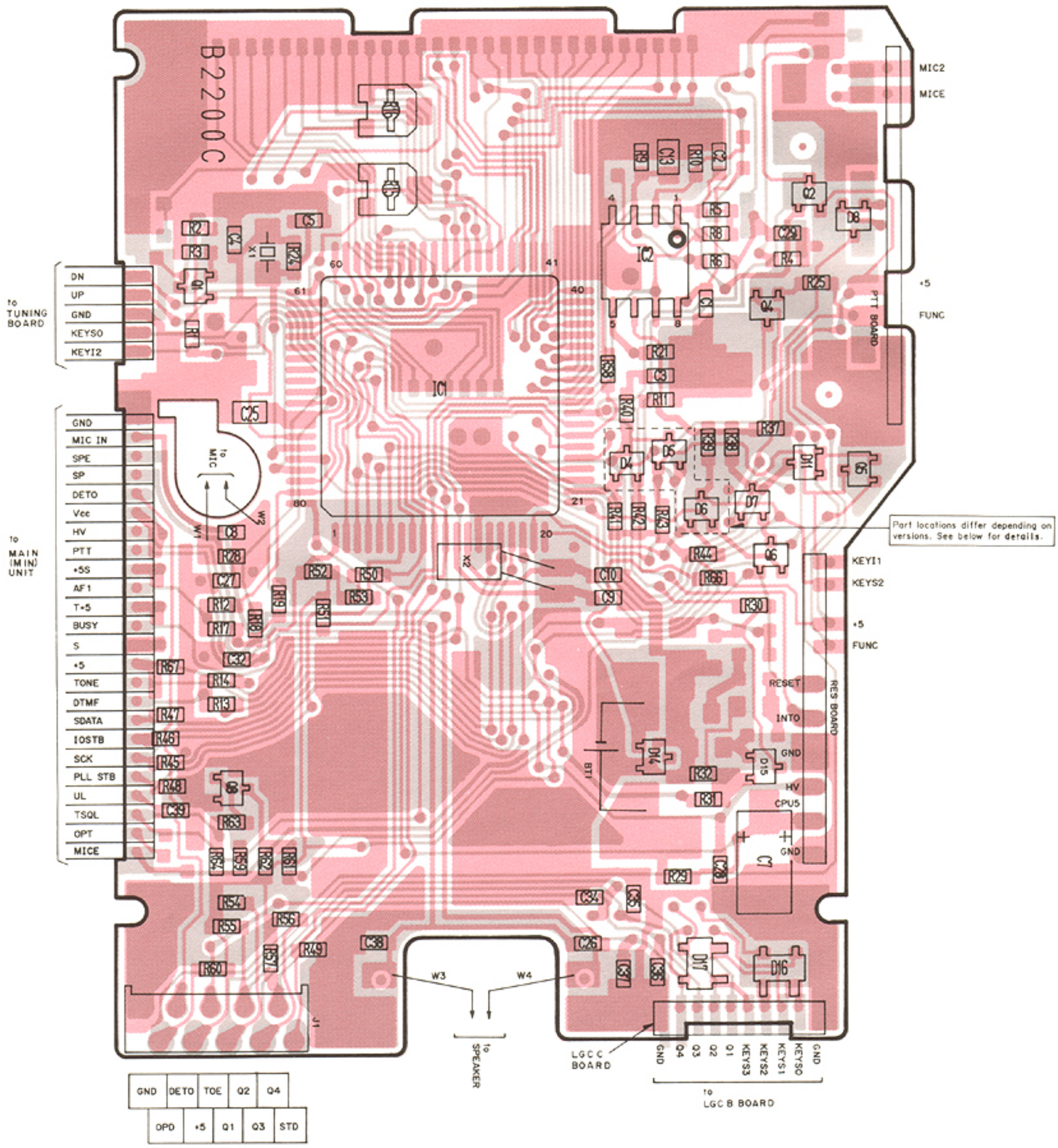

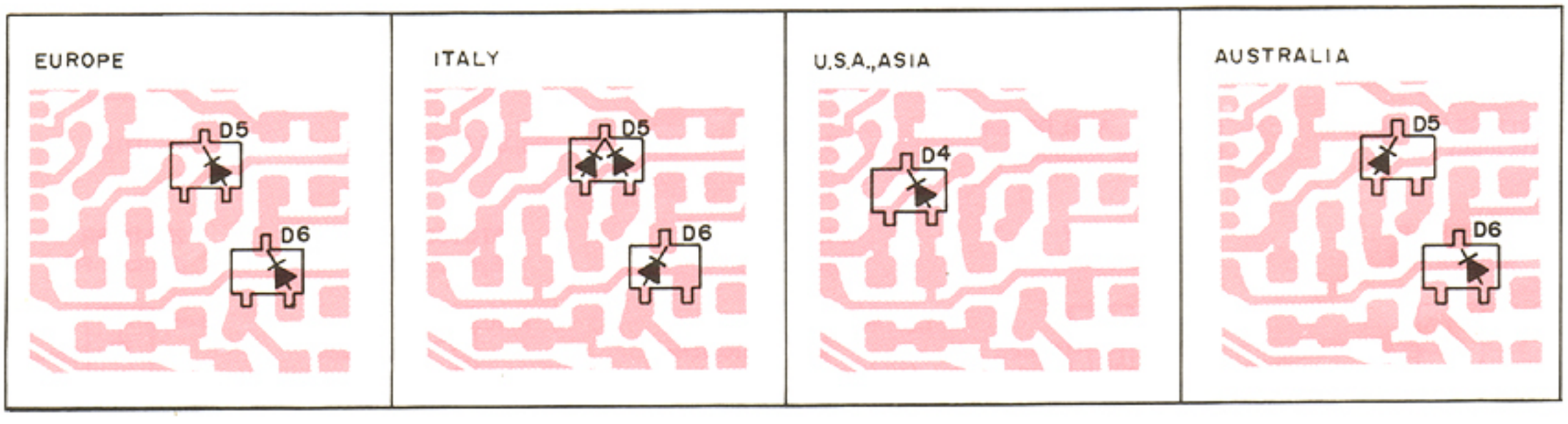

ManualsPlus.com

• LOGIC (LGC) UNIT

(BOTTOM VIEW)

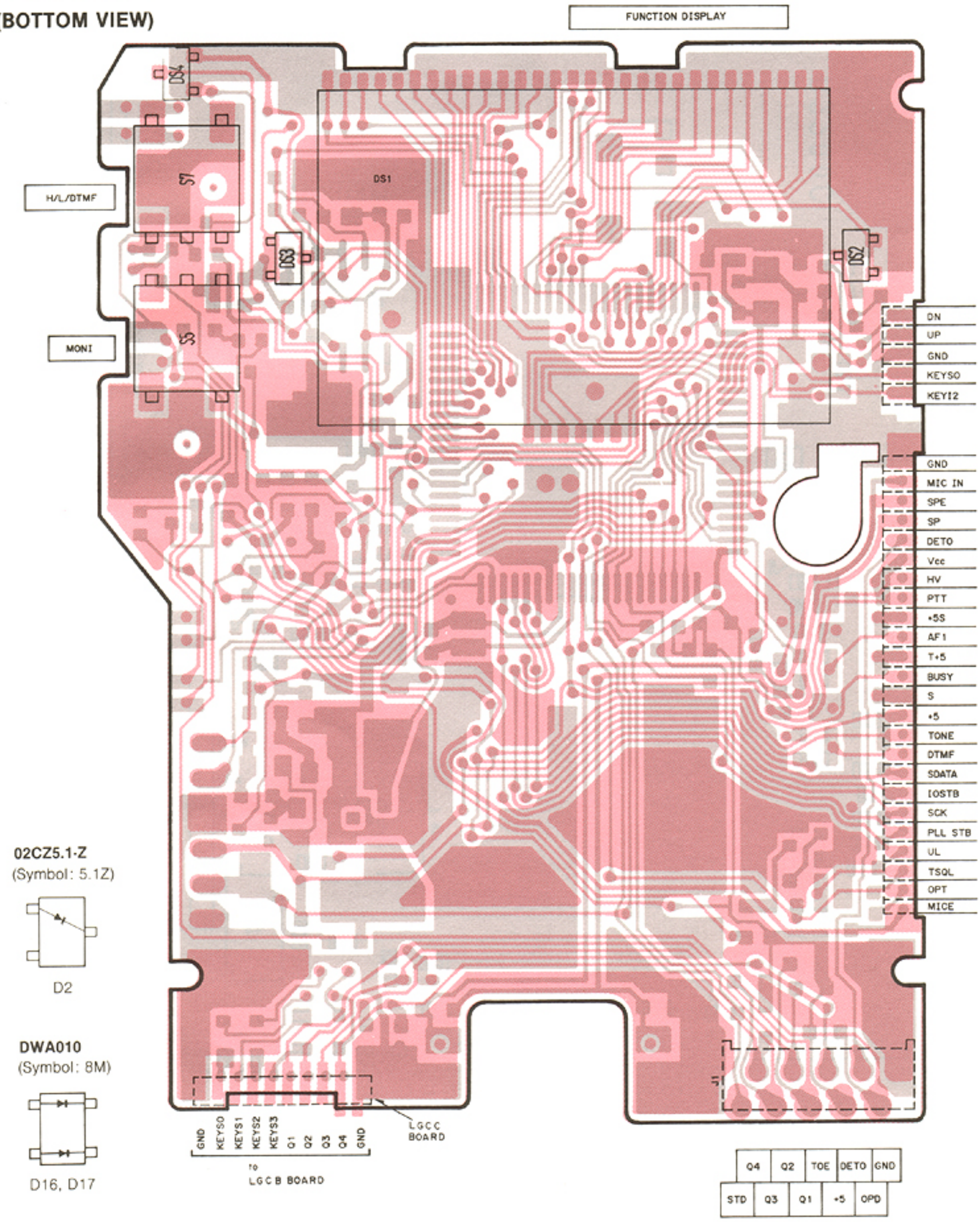

02CZ5.1-Z
(Symbol: 5.1Z)

D2

DWA010
(Symbol: 8M)

D16, D17

DA114
(Symbol: AV)

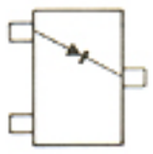

D11, D5 (Australia)
D6 (Italy)

DA115
(Symbol: AU)

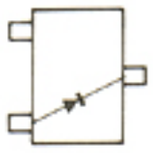

D4 (U.S.A., Asia), D5 (Europe)
D6 (Europe, Australia)

DA204U
(Symbol: K)

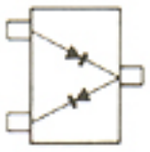

D14, D15

DAN202U
(Symbol: N)

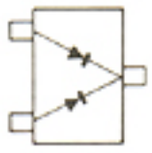

D3, D5 (Italy), D7, D8

DAP202U
(Symbol: P)

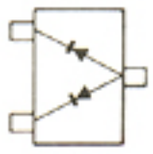

D12

2SC4081 R
(Symbol: BR)

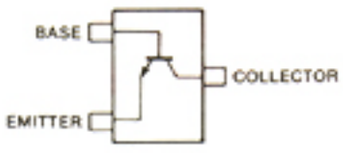

Q1, Q4, Q8

2SK880 Y
(Symbol: XY)

Q3

DTA144EU
(Symbol: 16)

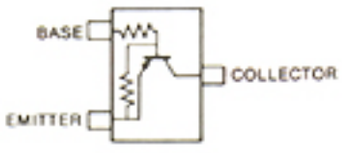

Q2

DTC144TU
(Symbol: 06)

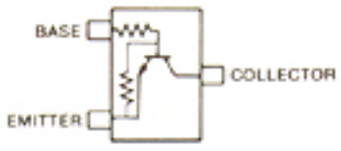

Q5

2SA1576R
(Symbol: FR)

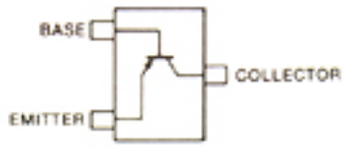

Q6

ManualsPlus.com

7-2 MAIN (MIN) UNIT

- **MAIN (MIN) UNIT**

(TOP VIEW)

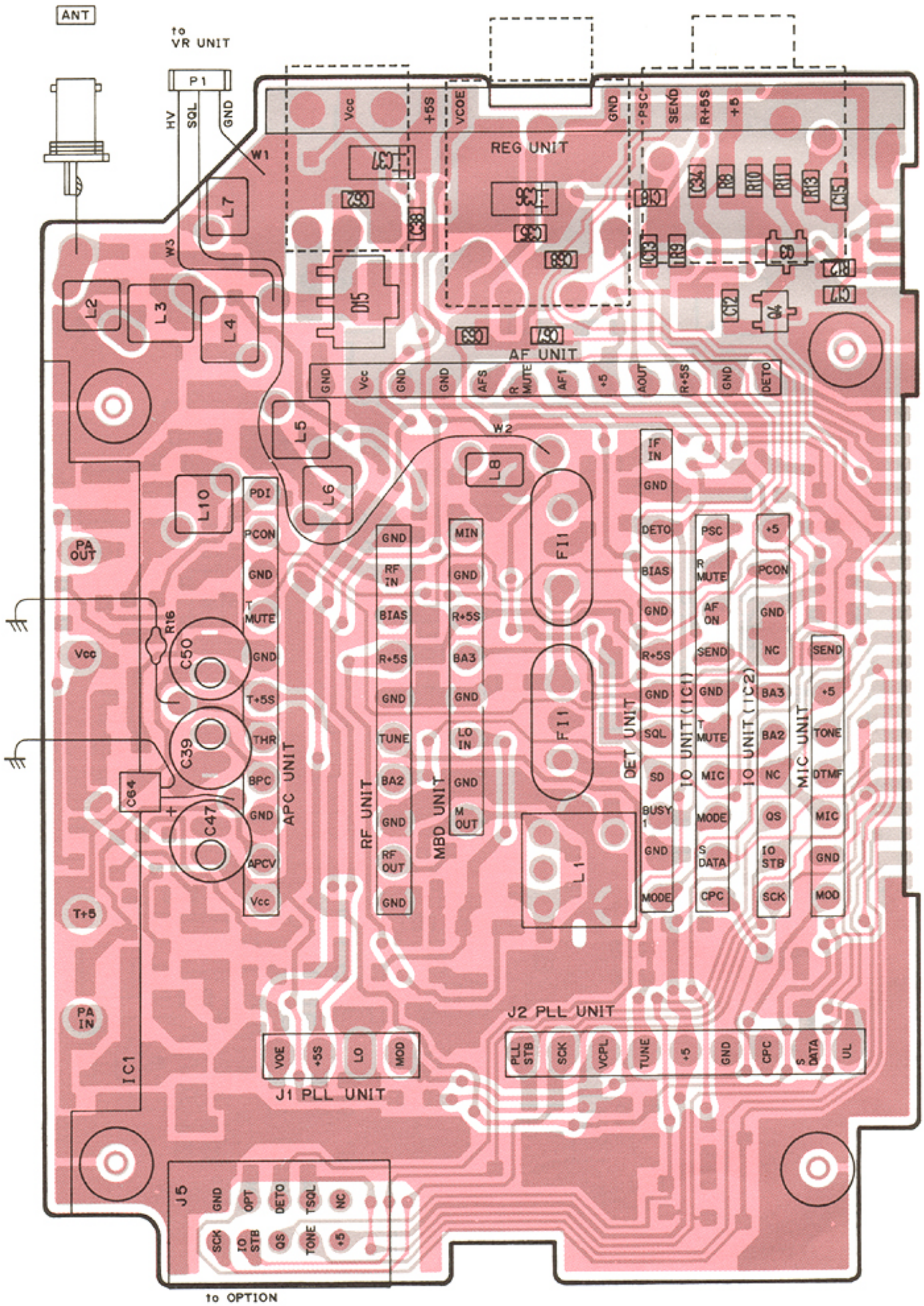

1SS153
(Symbol: A9)

D9

DAN202U
(Symbol: N)

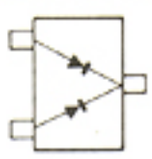

D8

HSM88AS
(Symbol: C1)
DA204U
(Symbol: K)

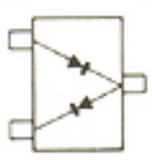

HSM88AS: D10, D11
DA204U: D13, D2

MA862
(Symbol: M1I)

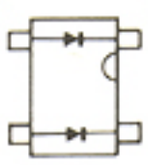

D14, D7

SB20-03P-TD
(Symbol: SC)

D15

ManualsPlus.com

- **MAIN (MIN) UNIT**

(BOTTOM VIEW)

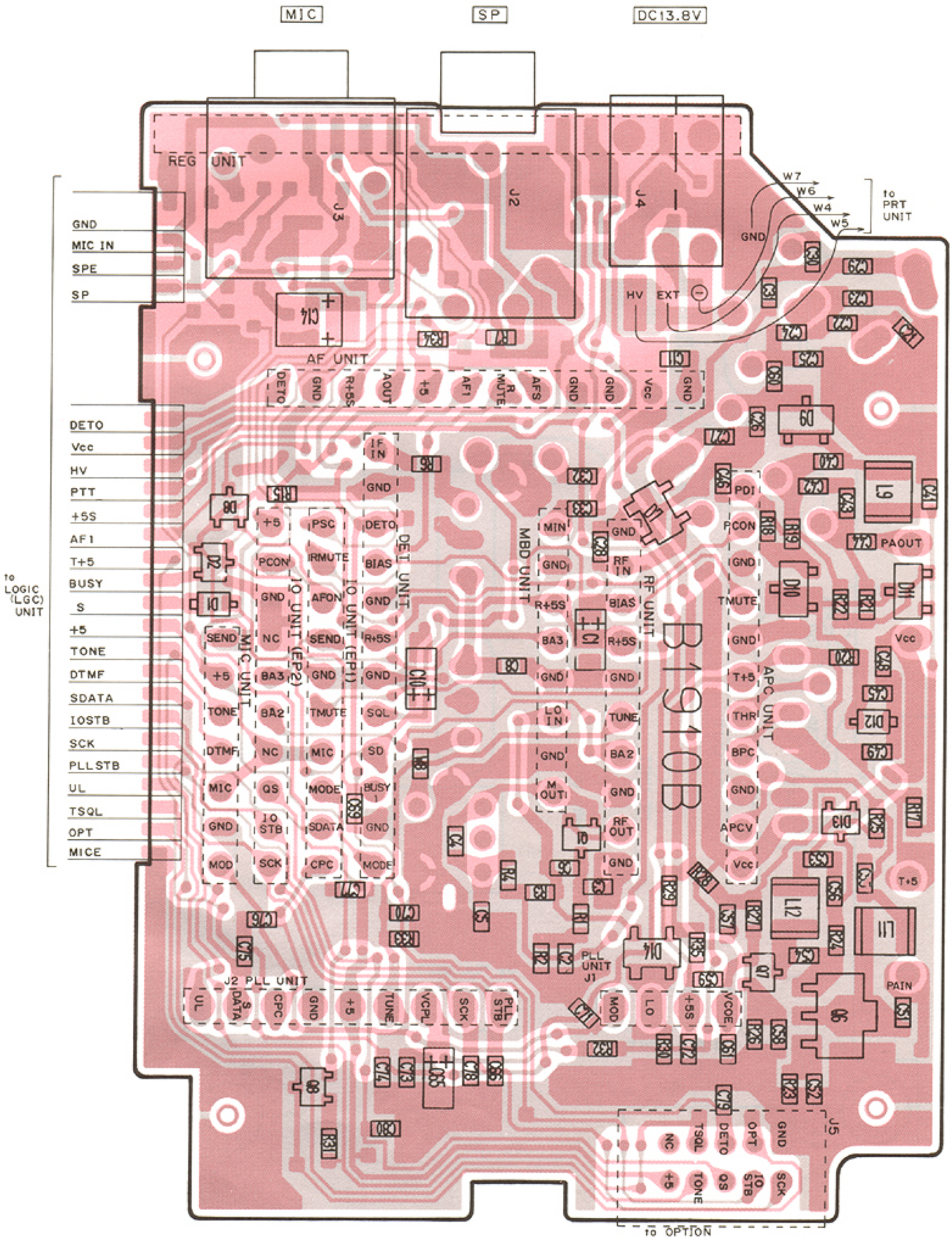

2SA1576 R
(Symbol: FR)

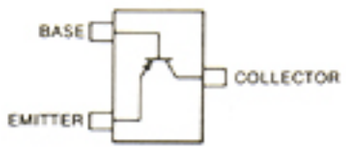

Q3, Q8

2SC2954
(Symbol: QK)

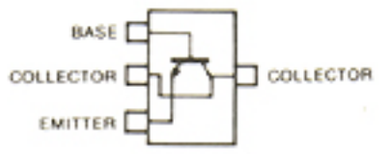

Q6

2SC4403 3
(Symbol: LY3)

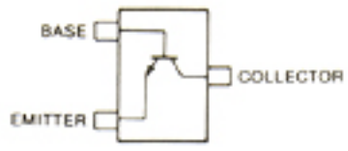

Q7

2SK882 Y
(Symbol: TY)

Q1

DTC144EU
(Symbol: 26)

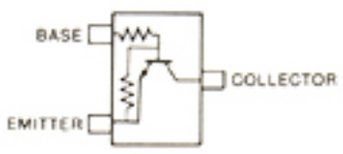

Q4

ManualsPlus.com

7-3 MBD AND AF UNITS

• MBD UNIT

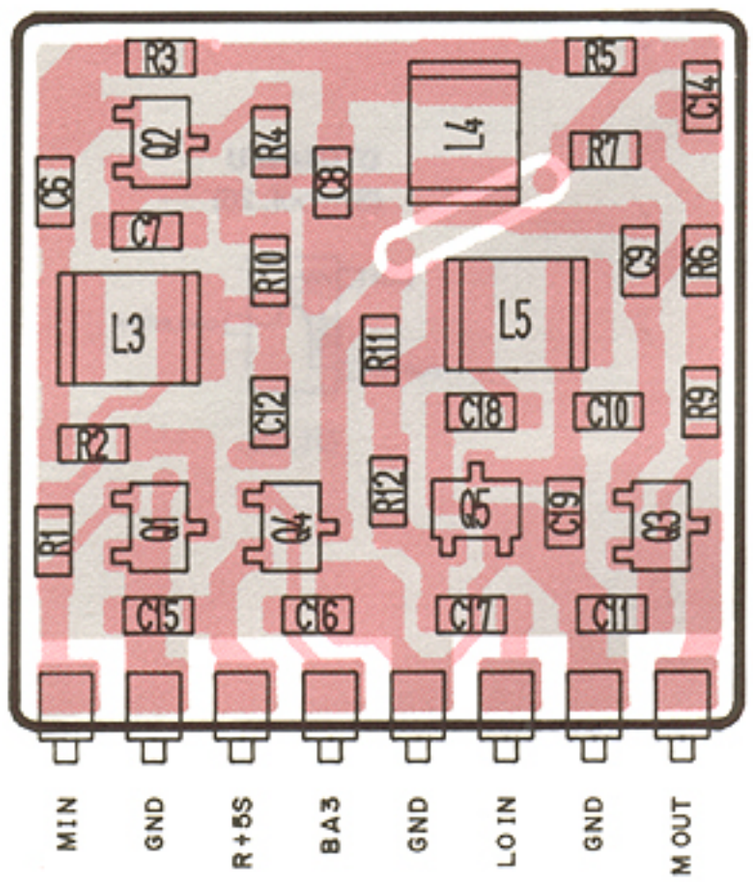

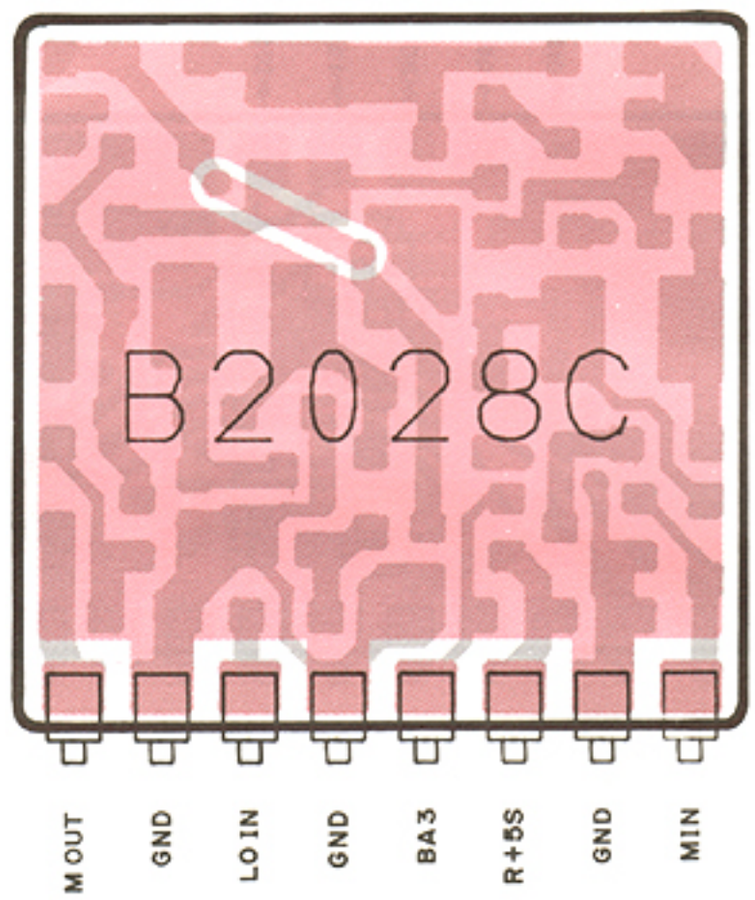

2SC4403 3
(Symbol: LY3)

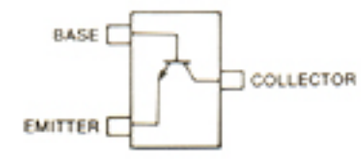

Q1, Q2, Q3, Q5

DTA144TU
(Symbol: 16)

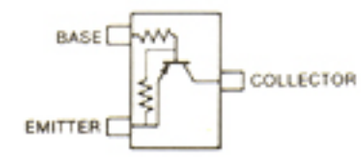

Q4

• AF UNIT

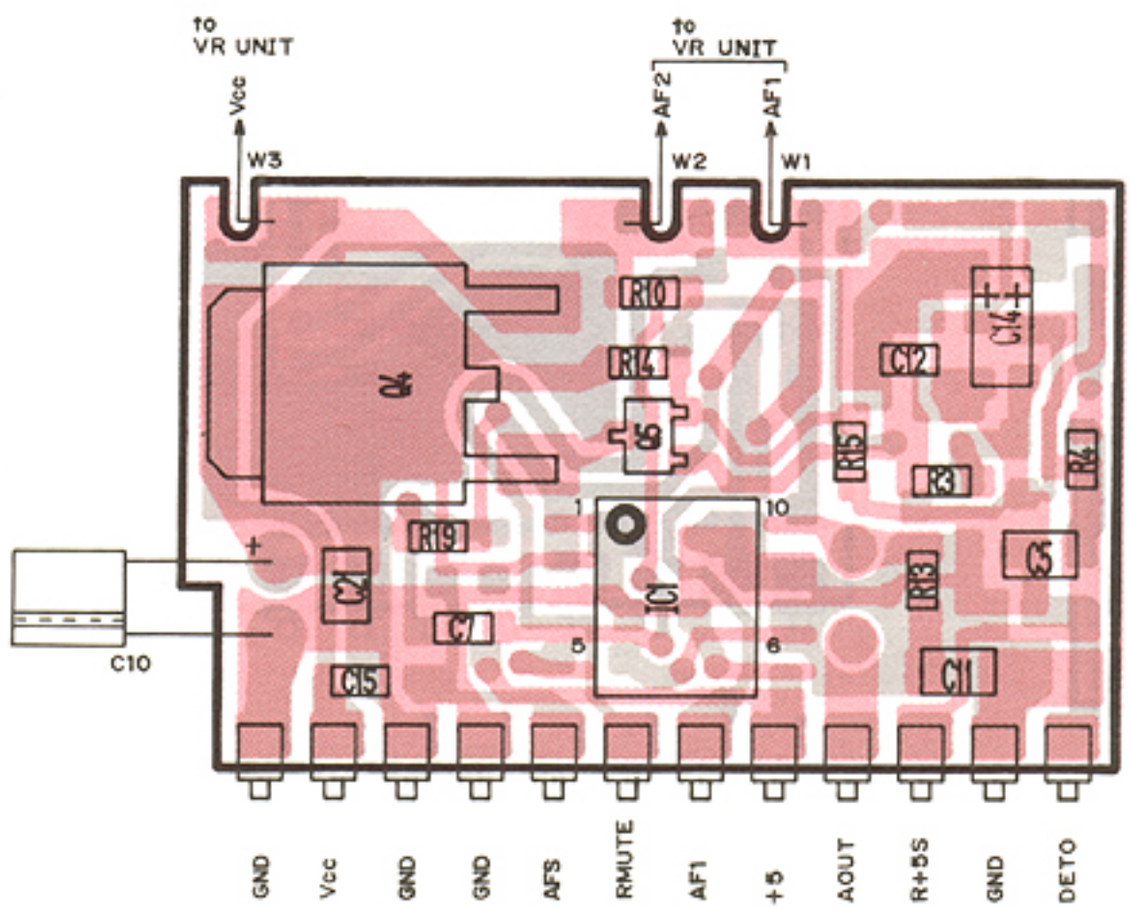

DAP202U
(Symbol: P)

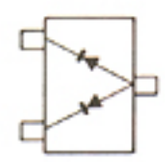

D1

2SB1182 Q
(Symbol: B1182)

Q4

2SC4081 R
(Symbol: BR)

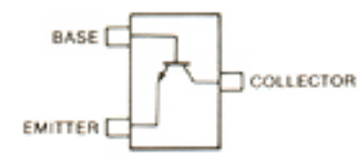

Q1, Q2, Q5, Q6

2SJ106-GR
(Symbol: VG)

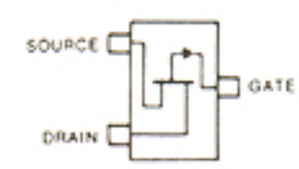

Q3

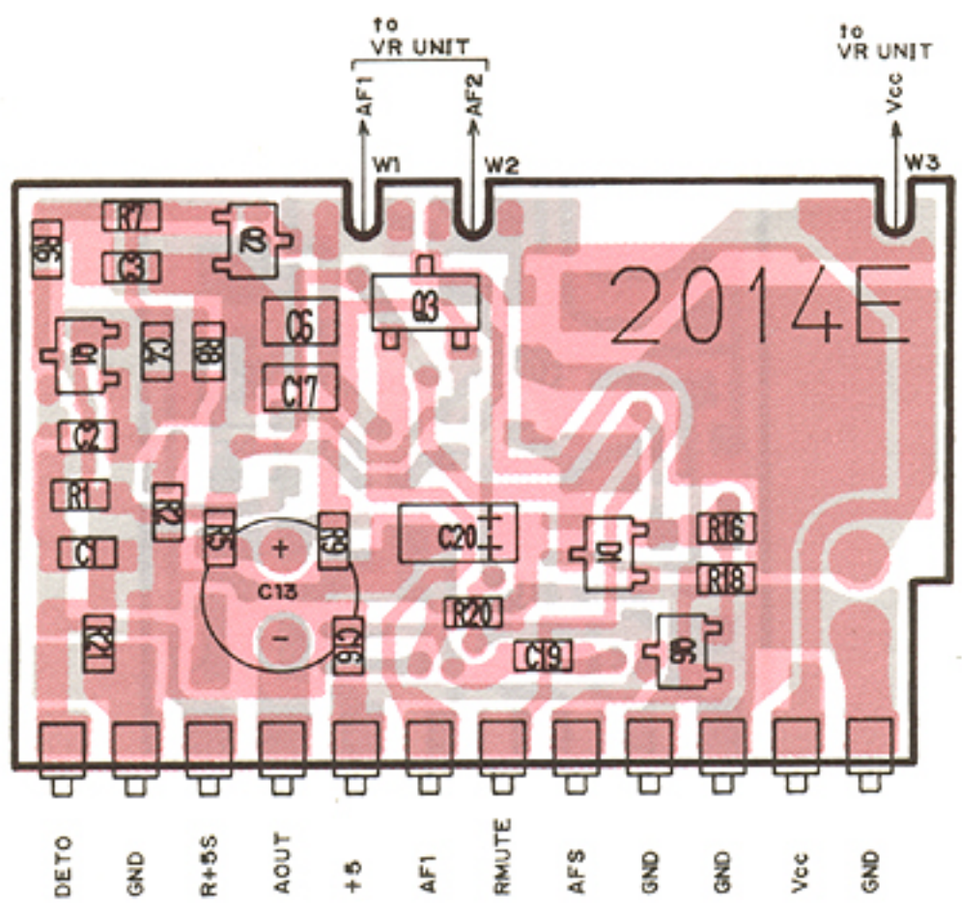

ManualsPlus.com

7-4 IO AND MIC UNITS

• IO UNIT (IC1)

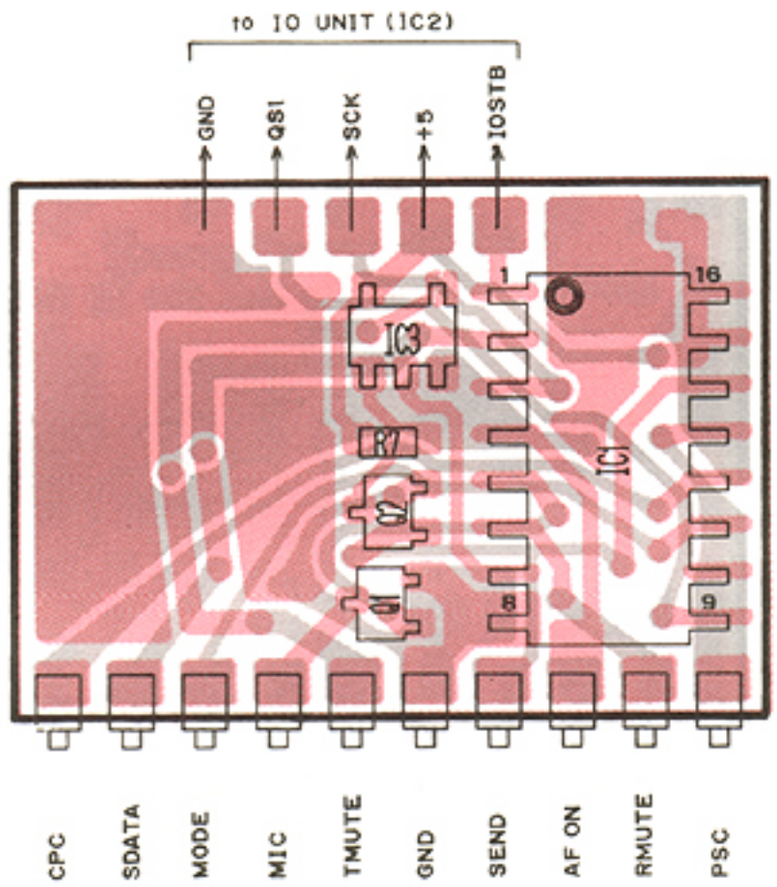

DTC144EU
(Symbol: 26)

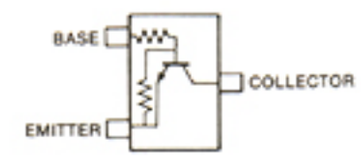

Q1, Q2

• IO UNIT (IC2)

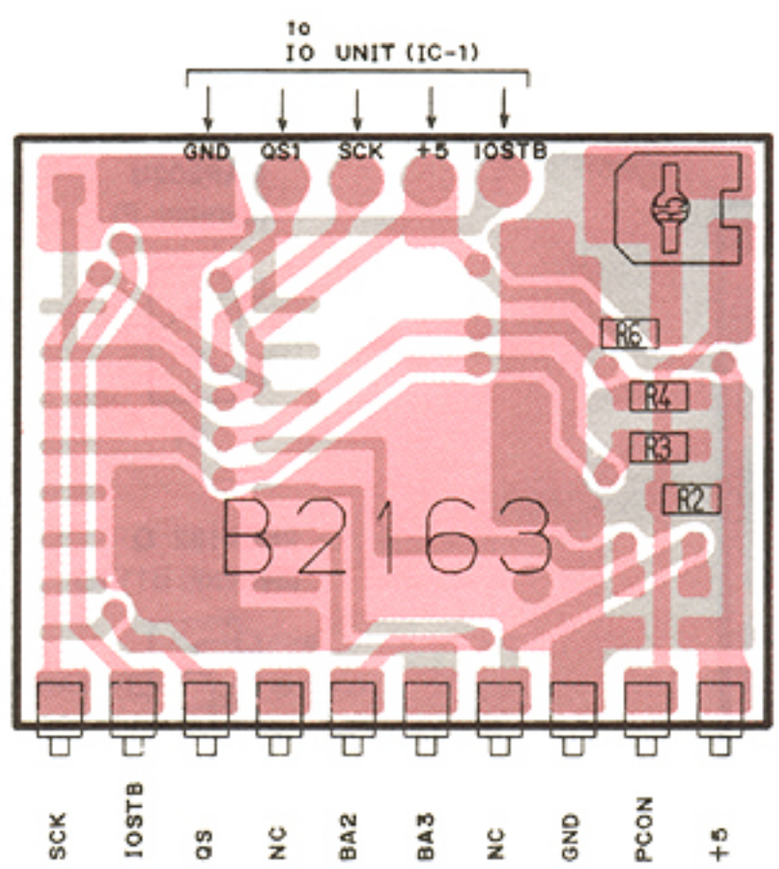

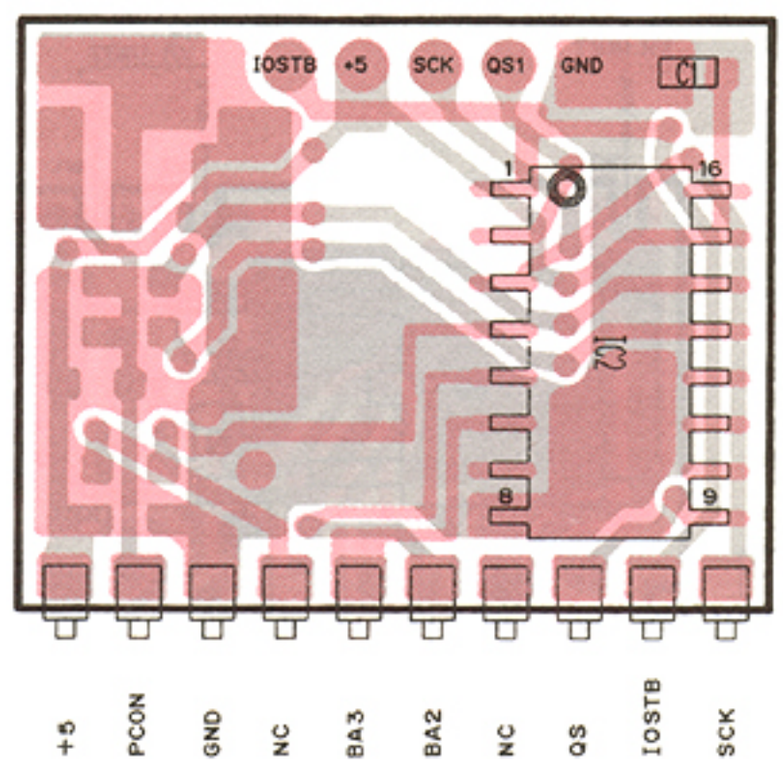

• MIC UNIT

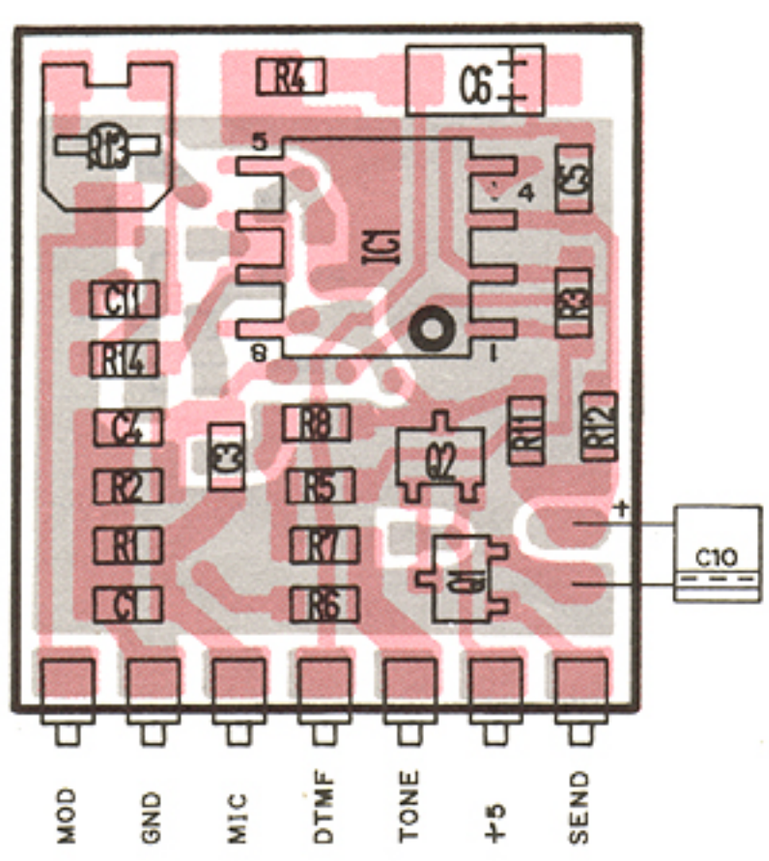

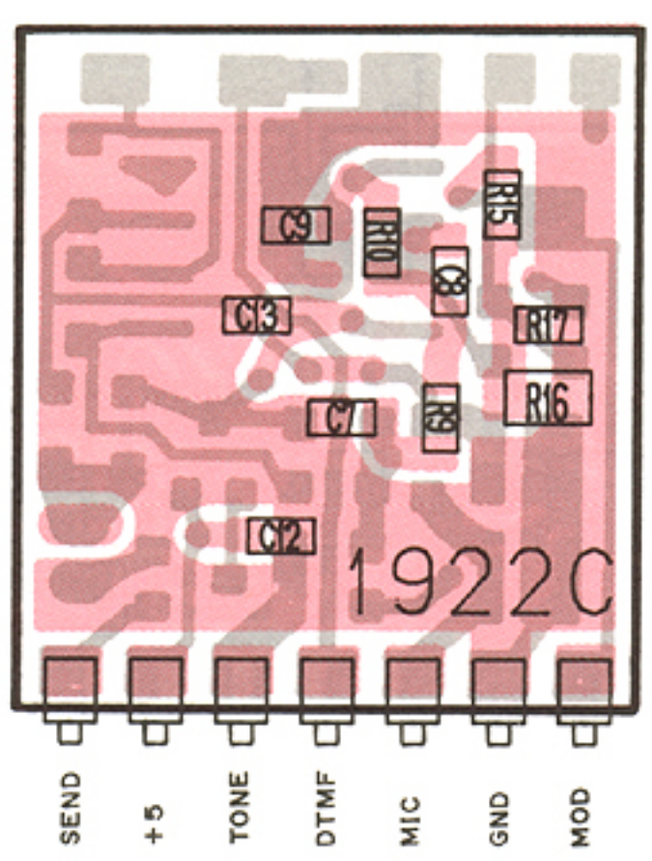

DTA144EU
(Symbol: 16)

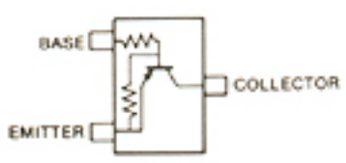

Q2

DTC144EU
(Symbol: 26)

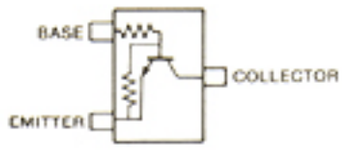

Q1

ManualsPlus.com

7-5 DET AND REG UNITS

• DET UNIT

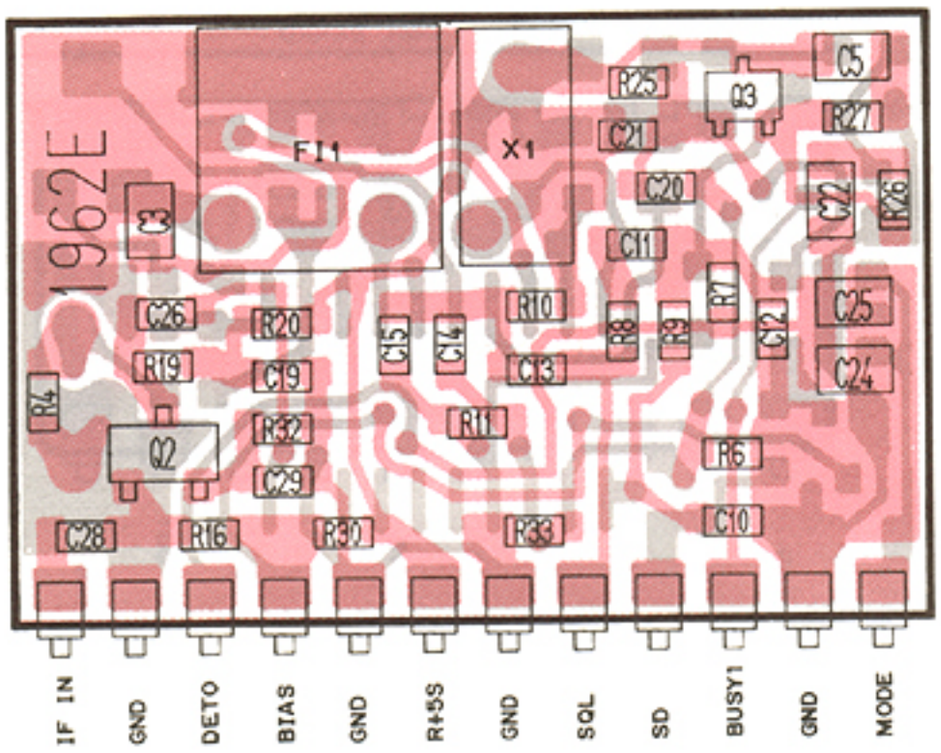

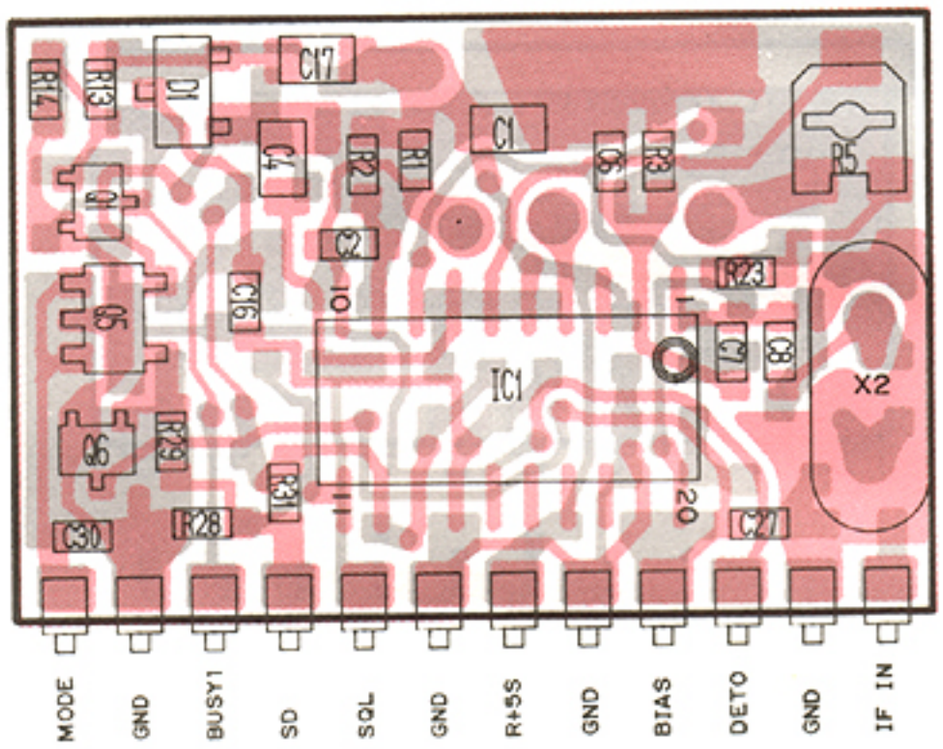

HSM88AS
(Symbol: C1)

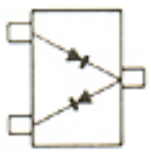

D1

2SC3770 3
(Symbol: JY3)
2SC4081 S
(Symbol: BS)

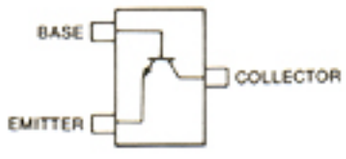

2SC3770 3 : Q2
2SC4081 S : Q1, Q3, Q6

FMG2
(Symbol: G2)

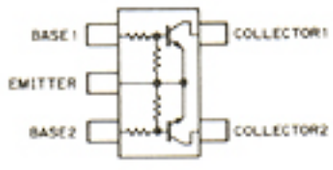

Q5

• REG UNIT

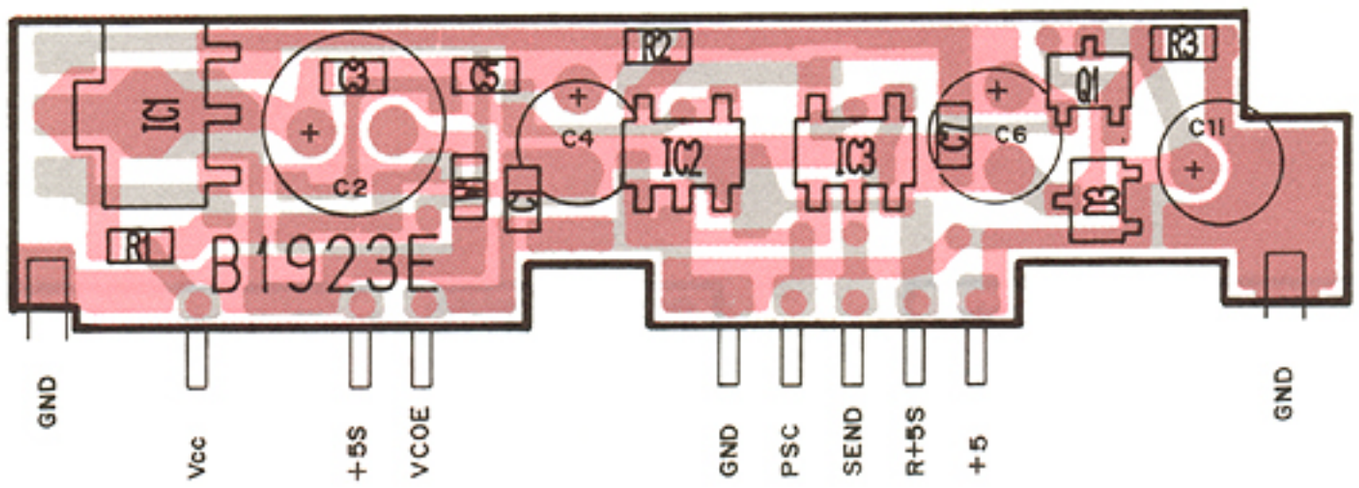

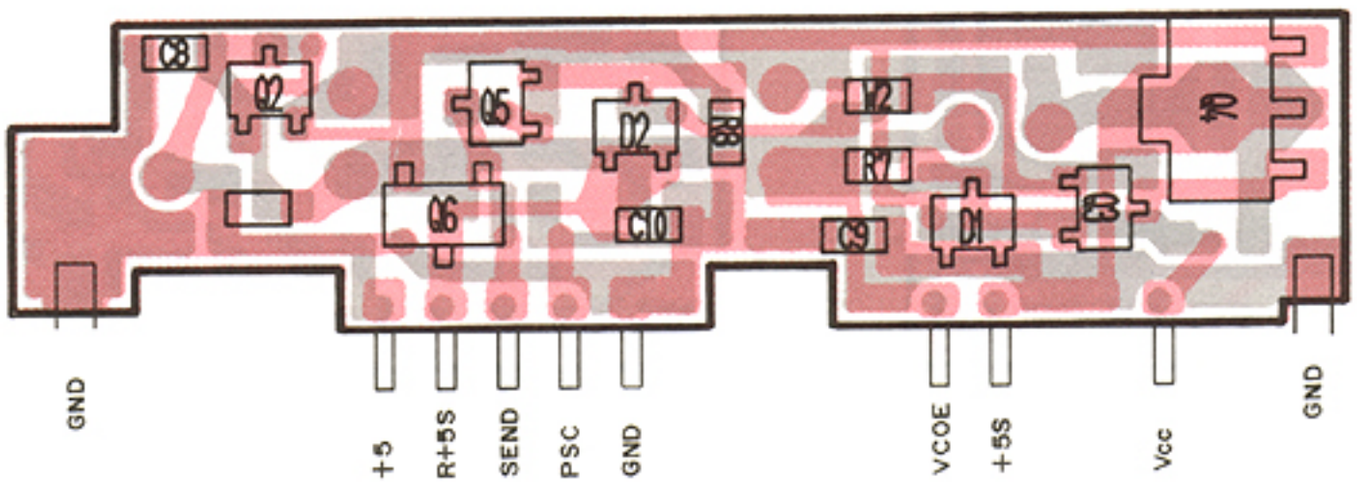

DA114
(Symbol: AV)

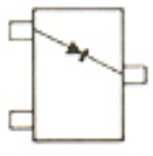

D1, D2, D3

2SA1162 GR
(Symbol: SG)
2SA1576 R
(Symbol: FR)

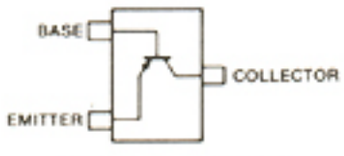

2SA1162 GR : Q6
2SA1576 R: Q2

2SB798
(Symbol: DK)

Q4

2SC4081 S
(Symbol: BS)

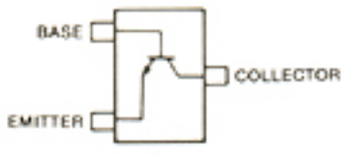

Q1, Q3, Q5

ManualsPlus.com

7-6 RF AND APC UNITS

• RF UNIT

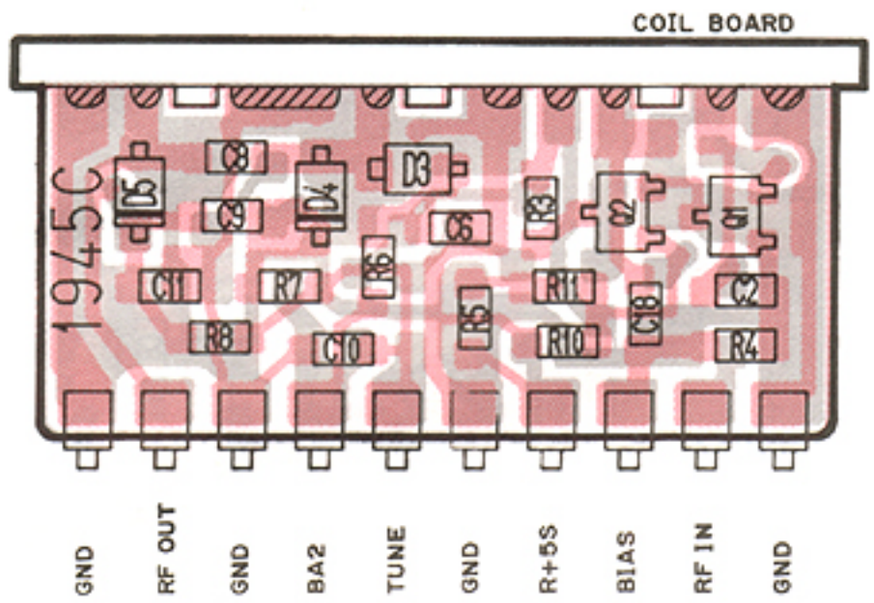

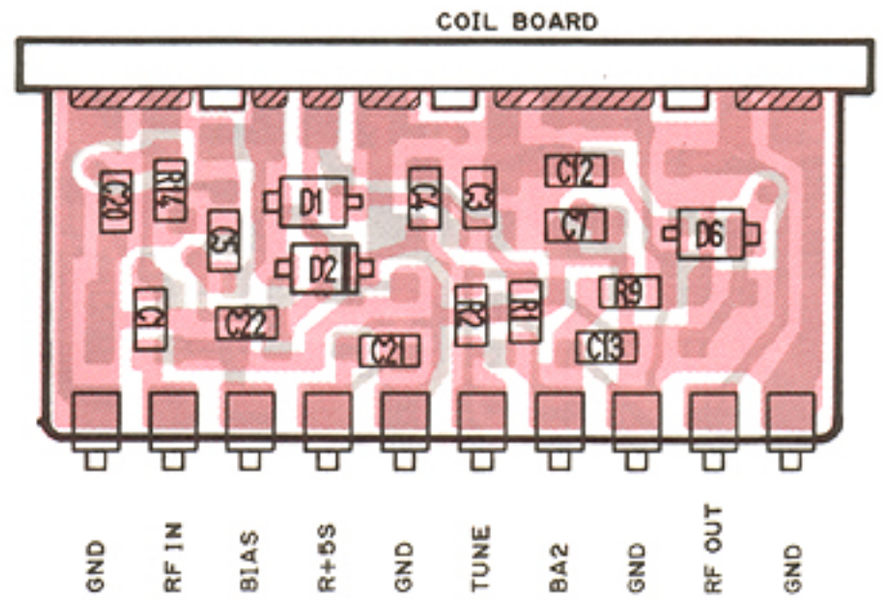

COIL BOARD

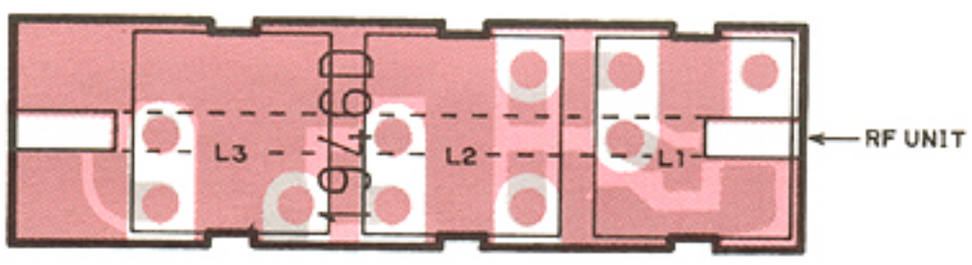

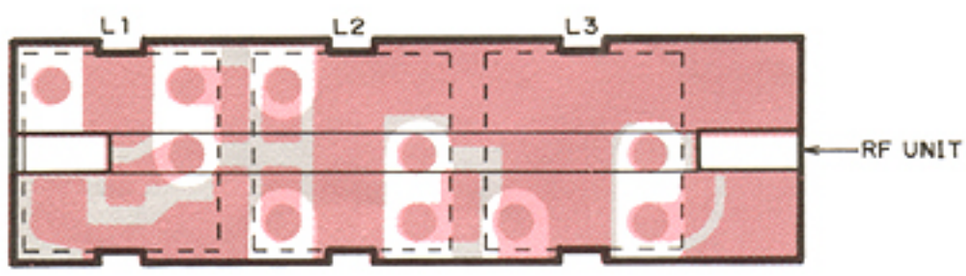

2SC4403 3
(Symbol: LY3)
2SC4405 3
(Symbol: OY3)

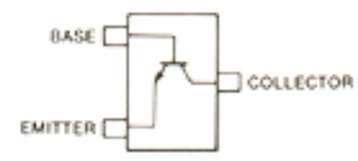

2SC4403 3 : Q2
2SC4405 3 : Q1

• APC UNIT

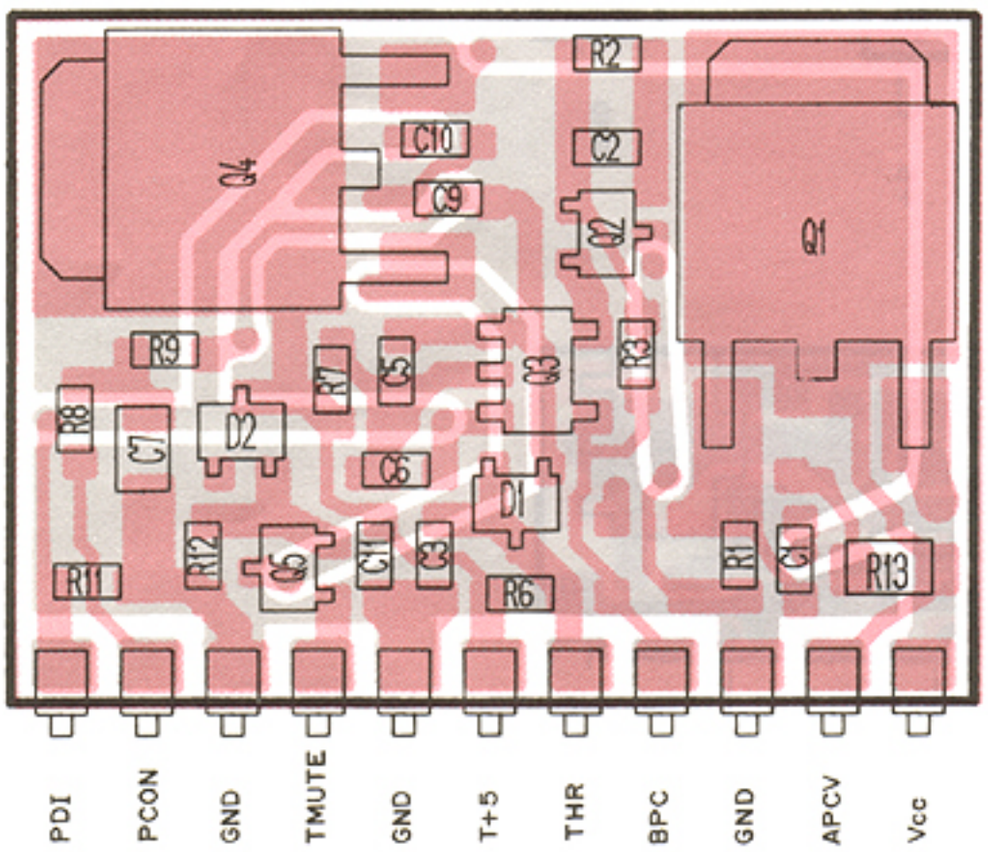

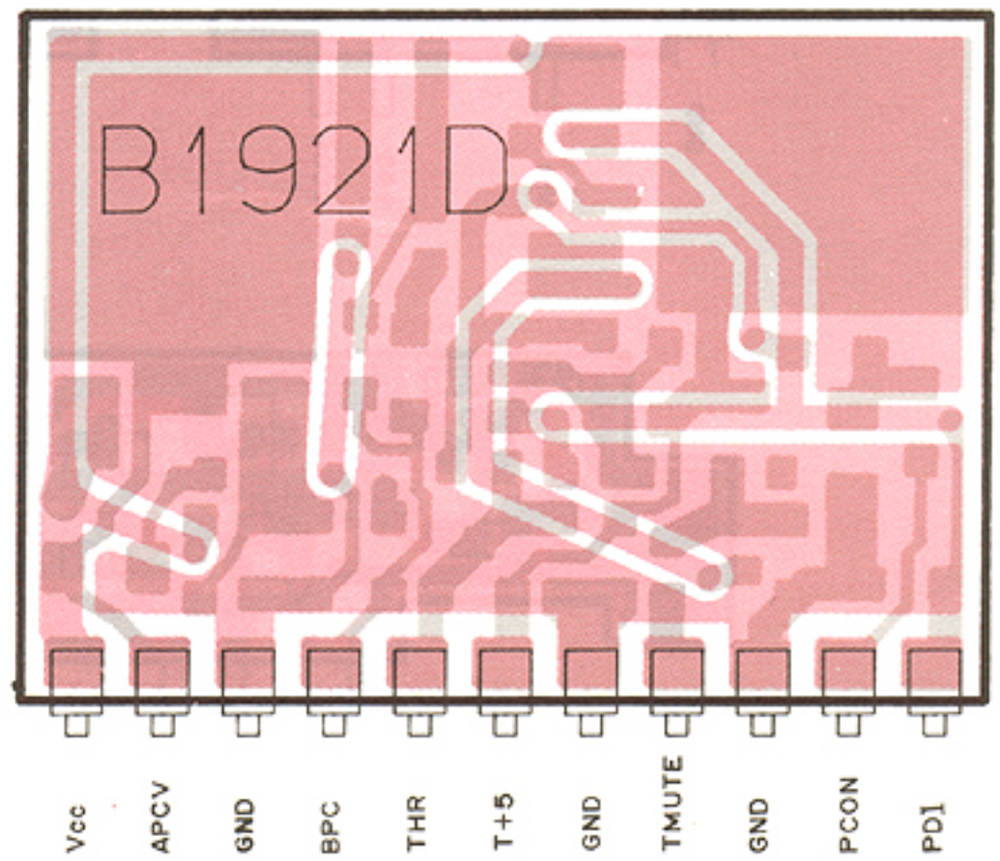

DA204U
(Symbol: K)

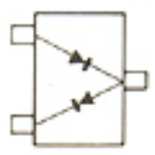

D1

DAP202U
(Symbol: P)

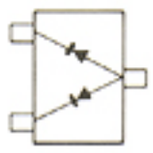

D2

2SB1182 Q
(Symbol:B1182)

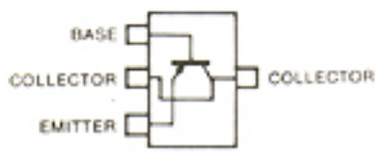

Q1, Q4

2SC4081 S
(Symbol: BS)

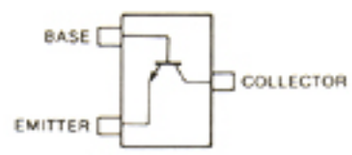

Q2, Q5

FMS1
(Symbol: SI)

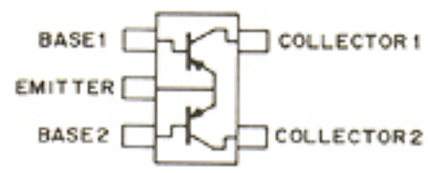

Q3

ManualsPlus.com

7-7 PLL AND PRT UNITS

• PLL UNIT

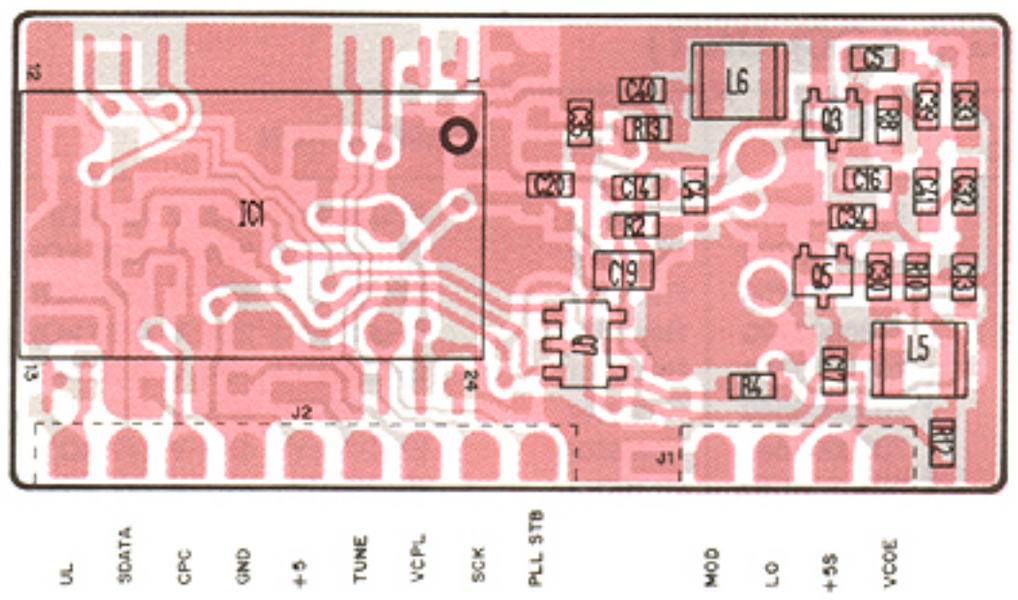

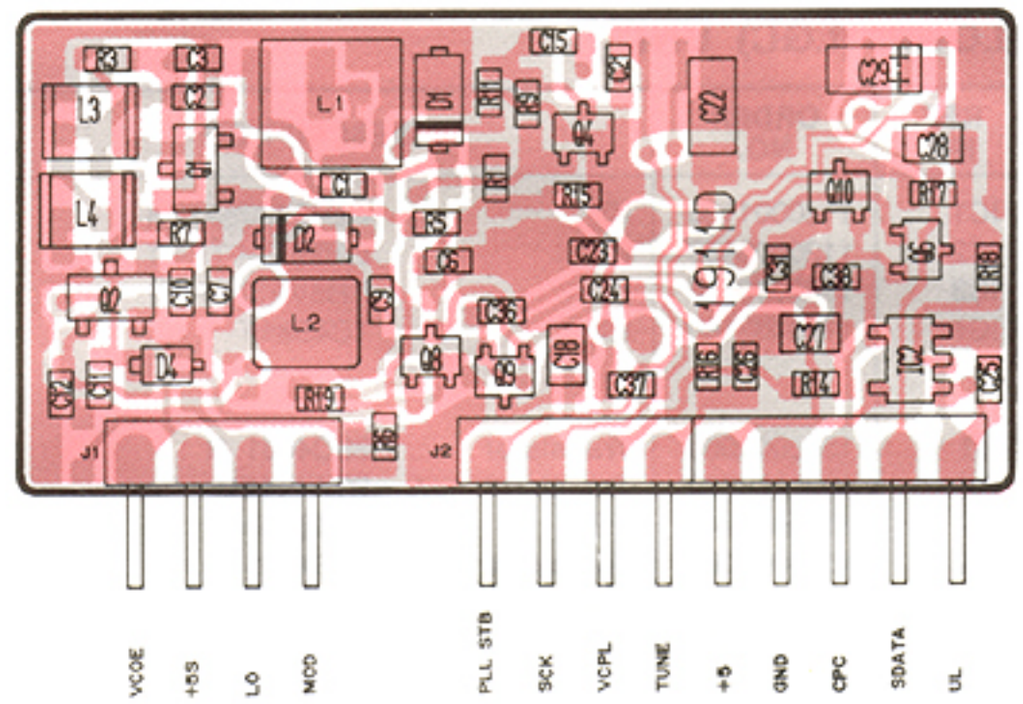

2SC4403 3
(Symbol: LY3)

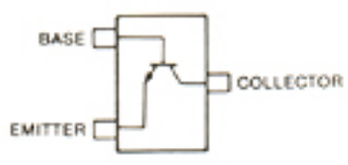

Q3, Q4, Q5

2SK210 Y
(Symbol: YY)
2SK302 GR
(Symbol: TG)

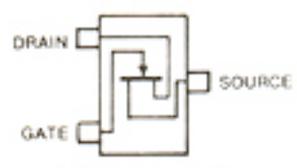

2SK210 Y: Q1
2SK302 GR: Q2

2SK880 Y
(Symbol: XY)

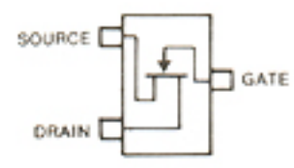

Q10,Q6

DTA143ZU
(Symbol: 113)

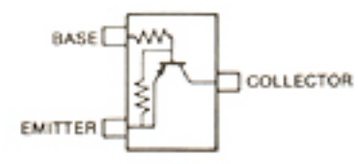

Q9

DTC144EU
(Symbol: 26)

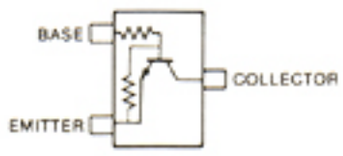

Q8

FMA2
(Symbol: A2)

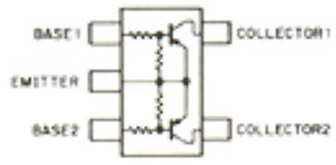

Q7

• PRT UNIT

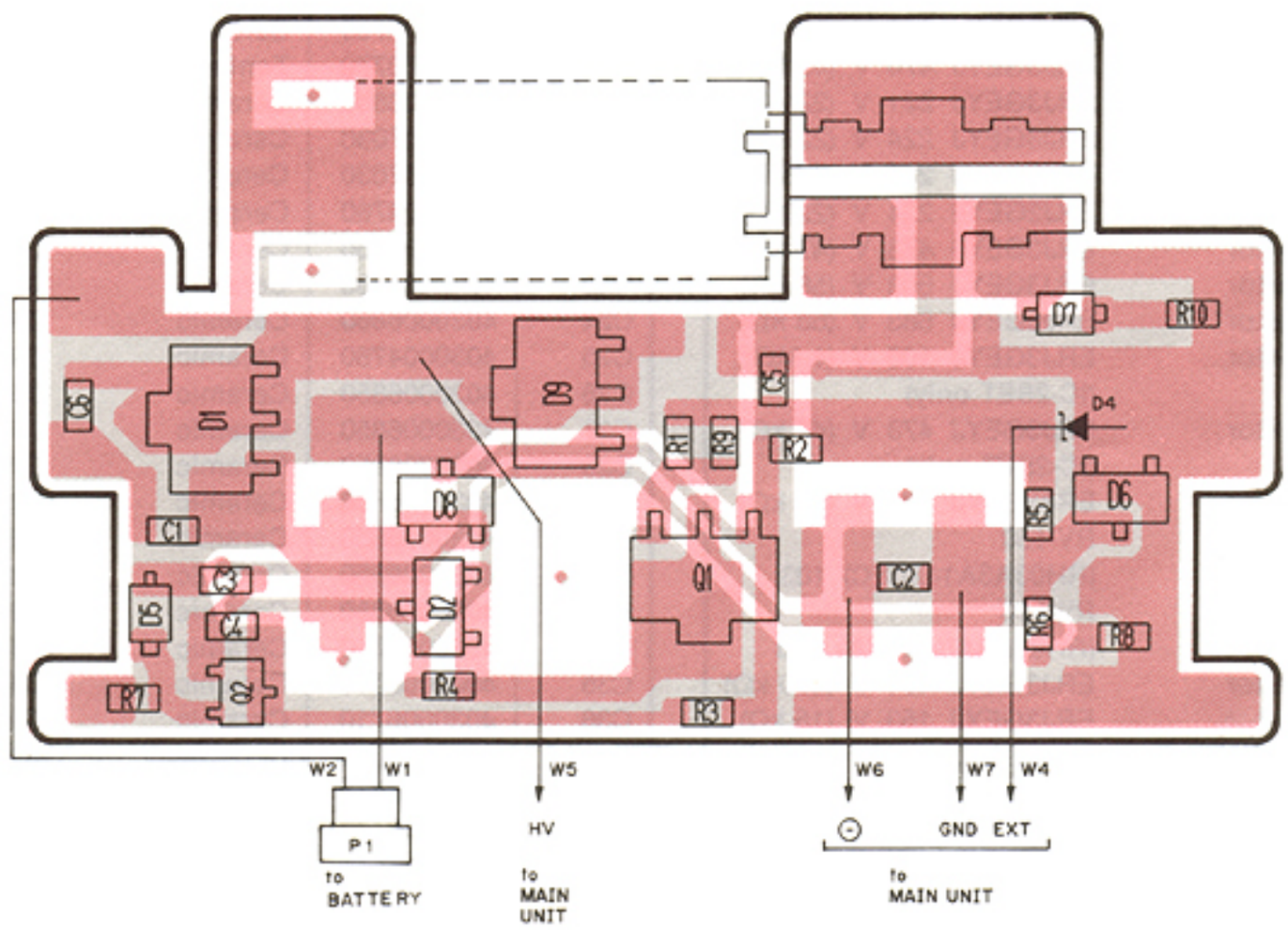

02CZ5.1-Z
(Symbol: 5.1Z)

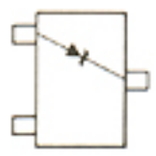

D6

SB07-03C-TA
(Symbol: J)

D2, D8

SB20-03P-TD
(Symbol: SC)

D1, D9

2SB798
(Symbol: DK)

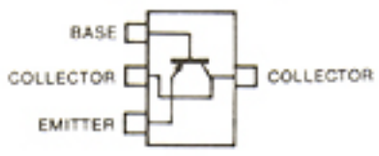

Q1

2SC4081 S
(Symbol: BS)

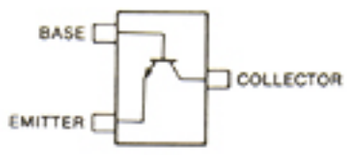

Q2

ManualsPlus.com

SECTION 8 PARTS LIST

[LOGIC (LGC) UNIT]

REF. NO.	ORDER NO.	DESCRIPTION	
IC1	1140001130	IC	HD404608A21H
IC2	1120000430	IC	LA6393M-TP-T1
IC3	1180000550	IC	RH5VA37CA-T1
IC4	1130003760	IC	TC4S81F
Q1	1530002060	Transistor	2SC4081 R
Q2	1590000720	Transistor	DTA144EU
Q3	1560000540	FET	2SK880-Y
Q4	1530002060	Transistor	2SC4081 R
Q5	1590000660	Transistor	DTC144TU
Q6	1510000510	Transistor	2SA1576R
Q8	1530002060	Transistor	2SC4081R
D2	1730002160	Zener	02CZ5.1-Z
D3	1160000060	Diode	DAN202U
D4	1750000170	Diode	DA115 (U.S.A., Asia)
D5	1750000170	Diode	DA115 (Europe)
	1160000060	Diode	DAN202U (Italy)
	1750000160	Diode	DA114 (Australia)
D6	1750000170	Diode	DA115 (Europe, Australia)
	1750000160	Diode	DA114 (Italy)
D7	1160000060	Diode	DAN202U
D8	1160000060	Diode	DAN202U
D9	1710000600	Diode	1SS254 (U.S.A.)
D11	1750000160	Diode	DA114
D12	1160000050	Diode	DAP202U
D14	1750000130	Diode	DA204U
D15	1750000130	Diode	DA204U
D16	1750000120	Diode	DWA010-TE
D17	1750000120	Diode	DWA010-TE
X1	6060000260	Crystal	CSB800J220
X2	6050005800	Crystal	DT-26S 32.768KHZ
R1	7030003520	Resistor	ERJ3GEYJ 472 V (4.7 kΩ)
R2	7030003480	Resistor	ERJ3GEYJ 222 V (2.2 kΩ)
R3	7030003280	Resistor	ERJ3GEYJ 470 V (47 Ω)
R4	7030003360	Resistor	ERJ3GEYJ 221 V (220 Ω)
R5	7030003720	Resistor	ERJ3GEYJ 224 V (220 kΩ)
R6	7030003880	Resistor	ERJ3GEYJ 244 V (240 kΩ)
R8	7030003720	Resistor	ERJ3GEYJ 224 V (220 kΩ)
R9	7030003640	Resistor	ERJ3GEYJ 473 V (47 kΩ)
R10	7030003650	Resistor	ERJ3GEYJ 563 V (56 kΩ)
R11	7030003660	Resistor	ERJ3GEYJ 683 V (68 kΩ)
R12	7030003800	Resistor	ERJ3GEYJ 105 V (1 MΩ) (IC-2SET only)
R13	7030003640	Resistor	ERJ3GEYJ 473 V (47 kΩ) (IC-2SET only)
R14	7030003560	Resistor	ERJ3GEYJ 103 V (10 kΩ)
R15	7310002740	Trimmer	RV-150 (RH03A3A14X0FC) 103
R16	7310002600	Trimmer	RV-110 (RH03A3AS4X0AA) 473
R17	7030003760	Resistor	ERJ3GEYJ 474 V (470 kΩ)
R18	7030003580	Resistor	ERJ3GEYJ 153 V (15 kΩ)
R19	7030003580	Resistor	ERJ3GEYJ 153 V (15 kΩ)
R20	7030003500	Resistor	ERJ3GEYJ 332 V (3.3 kΩ)
R21	7030003760	Resistor	ERJ3GEYJ 474 V (470 kΩ)
R22	7030003760	Resistor	ERJ3GEYJ 474 V (470 kΩ)
R23	7030003800	Resistor	ERJ3GEYJ 105 V (1 MΩ)
R24	7030003800	Resistor	ERJ3GEYJ 105 V (1 MΩ)
R25	7030003760	Resistor	ERJ3GEYJ 474 V (470 kΩ)
R28	7030003620	Resistor	ERJ3GEYJ 333 V (33 kΩ)
R29	7030003380	Resistor	ERJ3GEYJ 331 V (330 Ω)
R30	7030003600	Resistor	ERJ3GEYJ 223 V (22 kΩ)
R31	7030003580	Resistor	ERJ3GEYJ 153 V (15 kΩ)

[LOGIC (LGC) UNIT]

REF. NO.	ORDER NO.	DESCRIPTION	
R32	7030003610	Resistor	ERJ3GEYJ 273 V (27 kΩ)
R37	7030003790	Resistor	ERJ3GEYJ 824 V (820 kΩ)
R38	7030003750	Resistor	ERJ3GEYJ 394 V (390 kΩ)
R39	7030003720	Resistor	ERJ3GEYJ 224 V (220 kΩ)
R40	7030003680	Resistor	ERJ3GEYJ 104 V (100 kΩ)
R41	7030003640	Resistor	ERJ3GEYJ 473 V (47 kΩ)
R42	7030003640	Resistor	ERJ3GEYJ 473 V (47 kΩ)
R43	7030003640	Resistor	ERJ3GEYJ 473 V (47 kΩ)
R44	7030003640	Resistor	ERJ3GEYJ 473 V (47 kΩ)
R45	7030003800	Resistor	ERJ3GEYJ 105 V (1 MΩ)
R46	7030003800	Resistor	ERJ3GEYJ 105 V (1 MΩ)
R47	7030003800	Resistor	ERJ3GEYJ 105 V (1 MΩ)
R48	7030003800	Resistor	ERJ3GEYJ 105 V (1 MΩ)
R49	7030003800	Resistor	ERJ3GEYJ 105 V (1 MΩ)
R50	7030003720	Resistor	ERJ3GEYJ 224 V (220 kΩ)
R51	7030003720	Resistor	ERJ3GEYJ 224 V (220 kΩ)
R52	7030003720	Resistor	ERJ3GEYJ 224 V (220 kΩ)
R53	7030003800	Resistor	ERJ3GEYJ 105 V (1 MΩ)
R54	7030003720	Resistor	ERJ3GEYJ 224 V (220 kΩ)
R55	7030003720	Resistor	ERJ3GEYJ 224 V (220 kΩ)
R56	7030003720	Resistor	ERJ3GEYJ 224 V (220 kΩ)
R57	7030003720	Resistor	ERJ3GEYJ 224 V (220 kΩ)
R58	7030003800	Resistor	ERJ3GEYJ 105 V (1 MΩ)
R59	7030003720	Resistor	ERJ3GEYJ 224 V (220 kΩ)
R60	7030003800	Resistor	ERJ3GEYJ 105 V (1 MΩ)
R61	7030003800	Resistor	ERJ3GEYJ 105 V (1 MΩ)
R62	7030003640	Resistor	ERJ3GEYJ 473 V (47 kΩ)
R63	7030003800	Resistor	ERJ3GEYJ 105 V (1 MΩ)
R64	7030003640	Resistor	ERJ3GEYJ 473 V (47 kΩ)
R65	7030003200	Resistor	ERJ3GEYJ 100 V (10 Ω)
R66	7030003560	Resistor	ERJ3GEYJ 103 V (10 kΩ)
R67	7030003560	Resistor	ERJ3GEYJ 103 V (10 kΩ)
C1	4030006860	Ceramic	C1608 JB 1H 102K-T
C2	4030006850	Ceramic	C1608 JB 1H 471K-T
C3	4030006710	Ceramic	C1608 SL 1H 470J-T
C4	4030006800	Ceramic	C1608 SL 1H 221J-T
C5	4030006800	Ceramic	C1608 SL 1H 221J-T
C6	4030004760	Ceramic	C2012 JF 1E 104Z-T
C7	4550000770	Tantalum	TESVC 0J 226M-12L
C8	4030006850	Ceramic	C1608 JB 1H 471K-T
C9	4030007030	Ceramic	C1608 CH 1H 150J-T
C10	4030007030	Ceramic	C1608 CH 1H 150J-T
C11	4030004760	Ceramic	C2012 JF 1E 104Z-T
C13	4030004760	Ceramic	C2012 JF 1E 104Z-T
C22	4030004760	Ceramic	C2012 JF 1E 104Z-T
C24	4030006860	Ceramic	C1608 JB 1H 102K-T
C25	4030004760	Ceramic	C2012 JF 1E 104Z-T
C26	4030006850	Ceramic	C1608 JB 1H 471K-T
C27	4030006850	Ceramic	C1608 JB 1H 471K-T
C28	4030006850	Ceramic	C1608 JB 1H 471K-T
C29	4030006850	Ceramic	C1608 JB 1H 471K-T
C30	4030006850	Ceramic	C1608 JB 1H 471K-T
C31	4030006850	Ceramic	C1608 JB 1H 471K-T
C32	4030006850	Ceramic	C1608 JB 1H 471K-T
C34	4030006710	Ceramic	C1608 SL 1H 470J-T
C35	4030006710	Ceramic	C1608 SL 1H 470J-T
C36	4030006710	Ceramic	C1608 SL 1H 470J-T-A
C37	4030006710	Ceramic	C1608 SL 1H 470J-T-A
C38	4030006850	Ceramic	C1608 JB 1H 471K-T-A
C39	4030008430	Ceramic	C1608 JF 1H 223Z-T-A
DS1	6910003910	LCD	LCD2439
DS2	5040000950	LED	SLM-13DW
DS3	5040000950	LED	SLM-13DW
DS4	5040001110	LED	SLM-23VMWS

ManualsPlus.com

[LOGIC (LGC) UNIT]

REF. NO.	ORDER NO.	DESCRIPTION	
MC1	7700000860	Microphone	WM-62A
BT1	3020000120	Lithium Battery	CL2020-1VC
S1	2260000890	Encoder	SRBM1L040A [TUNING CONTROL]
S2	2260001150	Switch	SW-103 (SKHUPC007B) [LIGHT]
S3	2230000770	Switch	SW-104 (SKHUPE004B) [F]
S4	2230000770	Switch	SW-104 (SKHUPE004B) [PTT]
S5	2260001150	Switch	SW-103 (SKHUPC007B) [MONI]
S7	2260001150	Switch	SW-103 (SKHUPC007B) [H/L/DTMF]
SP1	2510000450	Speaker	EAS-3P123D
EP1	0910022773	P.C. Board	B 2200C (LOGIC)
EP2	0910021422	P.C. Board	B 1927B (TUNING)
EP3	0910021413	P.C. Board	B 2106C (RES)
EP4	0910023222	P.C. Board	B 2276B (PTT)
EP5	0910021322	F.P.C. Board	B 2108B
EP6	0910021912	F.P.C. Board	B 2111B
EP7	0910022754	P.C. Board	B 2201D (LGC B)
EP8	0910023513	P.C. Board	B 2291C (LGC C)
EP9	6910003110	Lead Frame	HFB2.0-0.7-8
EP10	8930015920	LCD Contact Strip	SRCN-756

[VR UNIT]

REF. NO.	ORDER NO.	DESCRIPTION	
R1	7210001440	Variable Resistor	RK097111101NA (10KA) [VOL]
R2	7210001450	Variable Resistor	RK0971110051A (10KB) [SQL]
C1	4030006860	Ceramic	C1608 JB 1H 102K-T
C2	4030006860	Ceramic	C1608 JB 1H 102K-T
C3	4510002650	Electrolytic	16 MS7 100 µF
EP1	0910021483	P.C. Board	B 1926C

[MAIN (MIN) UNIT]

REF. NO.	ORDER NO.	DESCRIPTION	
IC1	1150000730	IC	SC1096
Q1	1560000550	FET	2SK882-Y
Q3	1510000510	Transistor	2SA1576 R
Q4	1590000430	Transistor	DTC144EU
Q6	1530002340	Transistor	2SC2954

[MAIN (MIN) UNIT]

REF. NO.	ORDER NO.	DESCRIPTION	
Q7	1530002560	Transistor	2SC4403-3
Q8	1510000510	Transistor	2SA1576 R
D1	1790000590	Diode	MA110
D2	1750000130	Diode	DA204U
D7	1790000450	Diode	MA862
D8	1160000060	Diode	DAN202U
D9	1750000080	Diode	1SS153
D10	1790000490	Diode	HSM88AS
D11	1790000490	Diode	HSM88AS
D12	1790000590	Diode	MA110
D13	1750000130	Diode	DA204U
D14	1790000450	Diode	MA862
D15	1790000680	Diode	SB20-03P
FI1	2010000230	Filter	30M15B
L1	6150003210	Coil	LS-319
L2	6110002000	Coil	LA-226
L3	6110002120	Coil	LA-228
L4	6110002120	Coil	LA-228
L5	6110002070	Coil	LA-227
L6	6110002000	Coil	LA-226
L7	6110002070	Coil	LA-227
L8	6110002010	Coil	LA-224
L9	6200000750	Coil	LQH 3N 4R7M
L10	6110002070	Coil	LA-227
L11	6200000760	Coil	LQN 2A 56NM
L12	6200000260	Coil	LQN 2A R10K
R1	7030003290	Resistor	ERJ3GEYJ 560 V (56 Ω)
R2	7030003480	Resistor	ERJ3GEYJ 222 V (2.2 kΩ)
R3	7030003520	Resistor	ERJ3GEYJ 472 V (4.7 kΩ)
R4	7030003400	Resistor	ERJ3GEYJ 471 V (470 Ω)
R6	7030003410	Resistor	ERJ3GEYJ 561 V (560 Ω)
R7	7030003760	Resistor	ERJ3GEYJ 474 V (470 kΩ)
R8	7030003400	Resistor	ERJ3GEYJ 471 V (470 Ω)
R9	7030003400	Resistor	ERJ3GEYJ 471 V (470 Ω)
R10	7030003560	Resistor	ERJ3GEYJ 103 V (10 kΩ)
R11	7030003450	Resistor	ERJ3GEYJ 122 V (1.2 kΩ)
R12	7030003440	Resistor	ERJ3GEYJ 102 V (1 kΩ)
R13	7030003440	Resistor	ERJ3GEYJ 102 V (1 kΩ)
R15	7030003600	Resistor	ERJ3GEYJ 223 V (22 kΩ)
R16	7510000070	Thermistor	ERT-D2FHL503S
R17	7030003340	Resistor	ERJ3GEYJ 151 V (150 Ω)
R18	7030003380	Resistor	ERJ3GEYJ 331 V (330 Ω)
R19	7030003480	Resistor	ERJ3GEYJ 222 V (2.2 kΩ)
R20	7030003550	Resistor	ERJ3GEYJ 822 V (8.2 kΩ)
R21	7030003490	Resistor	ERJ3GEYJ 272 V (2.7 kΩ)
R22	7030003380	Resistor	ERJ3GEYJ 331 V (330 Ω)
R23	7030003200	Resistor	ERJ3GEYJ 100 V (10 Ω)
R24	7030003280	Resistor	ERJ3GEYJ 470 V (47 Ω)
R25	7030003200	Resistor	ERJ3GEYJ 100 V (10 Ω)
R26	7030003310	Resistor	ERJ3GEYJ 820 V (82 Ω)
R27	7030003320	Resistor	ERJ3GEYJ 101 V (100 Ω)
R28	7030003410	Resistor	ERJ3GEYJ 561 V (560 Ω)
R29	7030003520	Resistor	ERJ3GEYJ 472 V (4.7 kΩ)
R30	7030003520	Resistor	ERJ3GEYJ 472 V (4.7 kΩ)
R31	7030003800	Resistor	ERJ3GEYJ 105 V (1 MΩ)
R32	7030003560	Resistor	ERJ3GEYJ 103 V (10 kΩ)
R33	7030003720	Resistor	ERJ3GEYJ 224 V (220 kΩ)
R34	7030003680	Resistor	ERJ3GEYJ 104 V (100 kΩ)
R35	7030003280	Resistor	ERJ3GEYJ 470 V (47 Ω)
C1	4550002890	Tantalum	TESVA 1A 225M1-8L
C2	4030006860	Ceramic	C1608 JB 1H 102K-T
C3	4030006710	Ceramic	C1608 SL 1H 470J-T
C4	4030006660	Ceramic	C1608 SL 1H 220J-T
C5	4030006860	Ceramic	C1608 JB 1H 102K-T
C6	4030006860	Ceramic	C1608 JB 1H 102K-T

ManualsPlus.com

[MAIN (MIN) UNIT]

REF. NO.	ORDER NO.	DESCRIPTION	
C8	4030006620	Ceramic	C1608 SL 1H 120J-T
C10	4550000460	Tantalum	TESVA 1C 105M1-8L
C11	4030006860	Ceramic	C1608 JB 1H 102K-T
C12	4030006860	Ceramic	C1608 JB 1H 102K-T
C13	4030006860	Ceramic	C1608 JB 1H 102K-T
C14	4550003040	Tantalum	TEMSVB2 0J 106M1-8L
C15	4030006860	Ceramic	C1608 JB 1H 102K-T
C16	4030006860	Ceramic	C1608 JB 1H 102K-T
C17	4030006900	Ceramic	C1608 JB 1E 103K-T
C21	4030006660	Ceramic	C1608 SL 1H 220J-T
C22	4030006570	Ceramic	C1608 SL 1H 060D-T
C23	4030006670	Ceramic	C1608 SL 1H 270J-T
C24	4030006540	Ceramic	C1608 SL 1H 030C-T
C25	4030006640	Ceramic	C1608 SL 1H 180J-T
C26	4030006660	Ceramic	C1608 SL 1H 220J-T
C27	4030006690	Ceramic	C1608 SL 1H 330J-T
C28	4030006640	Ceramic	C1608 SL 1H 180J-T
C29	4030006580	Ceramic	C1608 SL 1H 070D-T
C30	4030006580	Ceramic	C1608 SL 1H 070D-T
C31	4030006550	Ceramic	C1608 SL 1H 040C-T
C32	4030006710	Ceramic	C1608 SL 1H 470J-T
C33	4030006580	Ceramic	C1608 SL 1H 070D-T
C34	4030006860	Ceramic	C1608 JB 1H 102K-T
C35	4030006860	Ceramic	C1608 JB 1H 102K-T
C36	4550002890	Tantalum	TESVA 1A 225M1-8L
C37	4550002890	Tantalum	TESVA 1A 225M1-8L
C38	4030006860	Ceramic	C1608 JB 1H 102K-T
C39	4510001380	Electrolytic	25 MS5 4R7 µF
C40	4030006860	Ceramic	C1608 JB 1H 102K-T
C41	4030006860	Ceramic	C1608 JB 1H 102K-T
C42	4030006660	Ceramic	C1608 SL 1H 220J-T
C43	4030006660	Ceramic	C1608 SL 1H 220J-T
C44	4030006860	Ceramic	C1608 JB 1H 102K-T
C45	4030006860	Ceramic	C1608 JB 1H 102K-T
C46	4030006860	Ceramic	C1608 JB 1H 102K-T
C47	4510003160	Electrolytic	16 RC2 22 µF
C48	4030006860	Ceramic	C1608 JB 1H 102K-T
C49	4030006860	Ceramic	C1608 JB 1H 102K-T
C50	4510001350	Electrolytic	16 MS5 10 µF
C51	4030006660	Ceramic	C1608 SL 1H 220J-T
C52	4030006890	Ceramic	C1608 JF 1H 103Z-T
C53	4030006860	Ceramic	C1608 JB 1H 102K-T
C54	4030006610	Ceramic	C1608 SL 1H 100D-T
C55	4030006860	Ceramic	C1608 JB 1H 102K-T
C56	4030006860	Ceramic	C1608 JB 1H 102K-T
C57	4030006860	Ceramic	C1608 JB 1H 102K-T
C58	4030006890	Ceramic	C1608 JF 1H 103Z-T
C59	4030006850	Ceramic	C1608 JB 1H 471K-T
C60	4030006860	Ceramic	C1608 JB 1H 102K-T
C61	4030006860	Ceramic	C1608 JB 1H 102K-T
C62	4030006860	Ceramic	C1608 JB 1H 102K-T
C63	4030006860	Ceramic	C1608 JB 1H 102K-T
C64	4510001350	Electrolytic	16 MS5 10 µF
C65	4550000460	Tantalum	TESVA 1C 105M1-8L
C66	4030006760	Ceramic	C1608 SL 1H 121J-T
C67	4030006860	Ceramic	C1608 JB 1H 102K-T
C68	4030006860	Ceramic	C1608 JB 1H 102K-T
C69	4030006860	Ceramic	C1608 JB 1H 102K-T
C70	4030006860	Ceramic	C1608 JB 1H 102K-T
C71	4030006750	Ceramic	C1608 SL 1H 101J-T
C72	4030006860	Ceramic	C1608 JB 1H 102K-T
C73	4030006860	Ceramic	C1608 JB 1H 102K-T
C74	4030006860	Ceramic	C1608 JB 1H 102K-T
C75	4030006750	Ceramic	C1608 SL 1H 101J-T
C76	4030006860	Ceramic	C1608 JB 1H 102K-T
C77	4030006750	Ceramic	C1608 SL 1H 101J-T
C78	4030006750	Ceramic	C1608 SL 1H 101J-T
C79	4030006860	Ceramic	C1608 JB 1H 102K-T
C80	4030006750	Ceramic	C1608 SL 1H 101J-T
EP1	0910021645	P.C. Board	B 1910E

[MBD UNIT]

REF. NO.	ORDER NO.	DESCRIPTION	
Q1	1530002560	Transistor	2SC4403-3
Q2	1530002560	Transistor	2SC4403-3
Q3	1530002560	Transistor	2SC4403-3
Q4	1590000650	Transistor	DTA144TU
Q5	1530002560	Transistor	2SC4403-3
L3	6200000100	Coil	LQN 2A 22NM
L4	6200000100	Coil	LQN 2A 22NM
L5	6200000100	Coil	LQN 2A 22NM
R1	7030003630	Resistor	ERJ3GEYJ 393 V (39 kΩ)
R2	7030003290	Resistor	ERJ3GEYJ 560 V (56 Ω)
R3	7030003630	Resistor	ERJ3GEYJ 393 V (39 kΩ)
R4	7030003290	Resistor	ERJ3GEYJ 560 V (56 Ω)
R5	7030003340	Resistor	ERJ3GEYJ 151 V (150 Ω)
R6	7030003610	Resistor	ERJ3GEYJ 273 V (27 kΩ)
R7	7030003640	Resistor	ERJ3GEYJ 473 V (47 kΩ)
R9	7030003440	Resistor	ERJ3GEYJ 102 V (1 kΩ)
R10	7030003280	Resistor	ERJ3GEYJ 470 V (47 Ω)
R11	7030003390	Resistor	ERJ3GEYJ 391 V (390 Ω)
R12	7030003650	Resistor	ERJ3GEYJ 563 V (56 kΩ)
C6	4030006630	Ceramic	C1608 SL 1H 150J-T
C7	4030006850	Ceramic	C1608 JB 1H 471K-T
C8	4030006850	Ceramic	C1608 JB 1H 471K-T
C9	4030006630	Ceramic	C1608 SL 1H 150J-T
C11	4030006510	Ceramic	C1608 SL 1H 0R5C-T
C11	4030006850	Ceramic	C1608 JB 1H 471K-T
C12	4030006850	Ceramic	C1608 JB 1H 471K-T
C14	4030006860	Ceramic	C1608 JB 1H 102K-T
C15	4030006860	Ceramic	C1608 JB 1H 102K-T
C16	4030006860	Ceramic	C1608 JB 1H 102K-T
C17	4030006540	Ceramic	C1608 SL 1H 030C-T
C18	4030006860	Ceramic	C1608 JB 1H 102K-T
C19	4030006610	Ceramic	C1608 SL 1H 100D-T
EP1	0910020763	P.C. Board	B 2028C
EP2	6910003110	Lead Frame	HFB2.0-0.7-8

[AF UNIT]

REF. NO.	ORDER NO.	DESCRIPTION	
IC1	1110001810	IC	TA7368F
Q1	1530002060	Transistor	2SC4081 R
Q2	1530002060	Transistor	2SC4081 R
Q3	1590000520	FET	2SJ106-GR
Q4	1520000270	Transistor	2SB1182 Q
Q5	1530002060	Transistor	2SC4081 R
Q6	1530002060	Transistor	2SC4081 R
D1	1160000050	Diode	DAP202U
R1	7030003580	Resistor	ERJ3GEYJ 153 V (15 kΩ)
R2	7030003700	Resistor	ERJ3GEYJ 154 V (150 kΩ)
R3	7030003760	Resistor	ERJ3GEYJ 474 V (470 kΩ)
R4	7030003560	Resistor	ERJ3GEYJ 103 V (10 kΩ)
R5	7030003480	Resistor	ERJ3GEYJ 222 V (2.2 kΩ)
R6	7030003630	Resistor	ERJ3GEYJ 393 V (39 kΩ)
R7	7030003630	Resistor	ERJ3GEYJ 393 V (39 kΩ)

ManualsPlus.com

[AF UNIT]

REF. NO.	ORDER NO.	DESCRIPTION	
R8	7030003480	Resistor	ERJ3GEYJ 222 V (2.2 kΩ)
R9	7030003800	Resistor	ERJ3GEYJ 105 V (1 MΩ)
R10	7030003320	Resistor	ERJ3GEYJ 101 V (100 Ω)
R13	7030003200	Resistor	ERJ3GEYJ 100 V (10 Ω)
R14	7030003420	Resistor	ERJ3GEYJ 681 V (680 Ω)
R15	7030003420	Resistor	ERJ3GEYJ 681 V (680 Ω)
R16	7030003600	Resistor	ERJ3GEYJ 223 V (22 kΩ)
R18	7030003760	Resistor	ERJ3GEYJ 474 V (470 kΩ)
R19	7030003560	Resistor	ERJ3GEYJ 103 V (10 kΩ)
R20	7030003340	Resistor	ERJ3GEYJ 151 V (150 Ω)
R21	7030003520	Resistor	ERJ3GEYJ 472 V (4.7 kΩ)
C1	4030006900	Ceramic	C1608 JB 1E 103K-T
C2	4030006900	Ceramic	C1608 JB 1E 103K-T
C3	4030006870	Ceramic	C1608 JB 1H 222K-T
C4	4030006860	Ceramic	C1608 JB 1H 102K-T
C5	4030004760	Ceramic	C2012 F 1E 104Z-T
C6	4030005110	Ceramic	C2012 B 1E 473K-T
C7	4030006860	Ceramic	C1608 JB 1H 102K-T
C10	4510001340	Electrolytic	10 MS5 33 µF
C11	4030005110	Ceramic	C2012 B 1E 473K-T
C12	4030006850	Ceramic	C1608 JB 1H 471K-T
C13	4510003180	Electrolytic	6.3 RC2 100 µF
C14	4550003290	Tantalum	TESVA 0G 475M1-8L
C15	4030006860	Ceramic	C1608 JB 1H 102K-T
C16	4030006860	Ceramic	C1608 JB 1H 102K-T
C17	4030005110	Ceramic	C2012 B 1E 473K-T
C19	4030006710	Ceramic	C1608 SL 1H 470J-T
C20	4550002950	Tantalum	TESVA 0J 335M1-8L
C21	4030004760	Ceramic	C2012 F 1E 104Z-T
EP1	0910021395	P.C. Board	B 2014E
EP2	6910003110	Lead Frame	HFB2.0-0.7-8

[IO UNIT]

REF. NO.	ORDER NO.	DESCRIPTION	
IC1	1130000830	IC	µPD4094BG
IC2	1130000830	IC	µPD4094BG
IC3	1130004170	IC	TC4S01F
Q1	1590000430	Transistor	DTC144EU
Q2	1590000430	Transistor	DTC144EU
R2	7030003700	Resistor	ERJ3GEYJ 154 V (150 kΩ)
R3	7030003680	Resistor	ERJ3GEYJ 104 V (100 kΩ)
R4	7030003720	Resistor	ERJ3GEYJ 224 V (220 kΩ)
R5	7310002580	Trimmer	RV-108 (RH03A3A15X05A) 104
R6	7030003620	Resistor	ERJ3GEYJ 333 V (33 kΩ)
R7	7030003720	Resistor	ERJ3GEYJ 224 V (220 kΩ)
C1	4030006860	Ceramic	C1608 JB 1H 102K-T
EP1	0910021443	P.C. Board	B 2070C (IC1)
EP2	0910022130	P.C. Board	B 2163 (IC2)
EP3	6910003110	Lead Frame	HFB2.0-0.7-8
EP4	6510008580	Lead Frame	PT2.0-0.7-16.5

[MIC UNIT]

REF. NO.	ORDER NO.	DESCRIPTION	
IC1	1110001540	IC	M5218FP-71A
Q1	1590000430	Transistor	DTC144EU
Q2	1590000720	Transistor	DTA144EU
R1	7030003640	Resistor	ERJ3GEYJ 473 V (47 kΩ)
R2	7030003880	Resistor	ERJ3GEYJ 244 V (240 kΩ)
R3	7030003710	Resistor	ERJ3GEYJ 184 V (180 kΩ)
R4	7030003330	Resistor	ERJ3GEYJ 121 V (120 Ω) (Europe, Italy, Australia, Asia)
	7030003370	Resistor	ERJ3GEYJ 271 V (270 Ω) (U.S.A.)
R5	7030003670	Resistor	ERJ3GEYJ 823 V (82 kΩ)
R6	7030003720	Resistor	ERJ3GEYJ 224 V (220 kΩ)
R7	7030003680	Resistor	ERJ3GEYJ 104 V (100 kΩ)
R8	7030003740	Resistor	ERJ3GEYJ 334 V (330 kΩ)
R9	7030003630	Resistor	ERJ3GEYJ 393 V (39 kΩ)
R10	7030003630	Resistor	ERJ3GEYJ 393 V (39 kΩ)
R11	7030003440	Resistor	ERJ3GEYJ 102 V (1 kΩ)
R12	7030003710	Resistor	ERJ3GEYJ 184 V (180 kΩ)
R13	7310002600	Trimmer	RV-110 (RH03A3AS4X0AA) 473
R14	7030003590	Resistor	ERJ3GEYJ 183 V (18 kΩ)
R15	7030003600	Resistor	ERJ3GEYJ 223 V (22 kΩ)
R16	7510000180	Thermistor	DTN-T203S223L (T)
R17	7030003570	Resistor	ERJ3GEYJ 123 V (12 kΩ)
C1	4030006860	Ceramic	C1608 JB 1H 102K-T
C3	4030006880	Ceramic	C1608 JB 1H 472K-T
C4	4030006850	Ceramic	C1608 JB 1H 471K-T
C5	4030006850	Ceramic	C1608 JB 1H 471K-T
C6	4550000550	Tantalum	TESVA 1V 224M1-8L (Europe, Italy, Australia, Asia)
	4550000530	Tantalum	TESVA 1V 104M1-8L (U.S.A.)
C7	4030008470	Ceramic	C1608 JB 1H 272K-T
C8	4030006900	Ceramic	C1608 JB 1E 103K-T
C9	4030006760	Ceramic	C1608 SL 1H 121J-T
C10	4510001850	Electrolytic	16 MS5 4R7 µF
C11	4030006880	Ceramic	C1608 JB 1H 472K-T
C12	4030006850	Ceramic	C1608 JB 1H 471K-T
C13	4030006850	Ceramic	C1608 JB 1H 471K-T
EP1	0910020243	P.C. Board	B 1922C
EP2	6910003110	Lead Frame	HFB2.0-0.7-8

[DET UNIT]

REF. NO.	ORDER NO.	DESCRIPTION	
IC1	1120001650	IC	TK10487MT1
Q1	1530002280	Transistor	2SC4081 S
Q2	1530002020	Transistor	2SC3770-3
Q3	1530002280	Transistor	2SC4081 S
Q5	1590000830	Transistor	FMG2
Q6	1530002280	Transistor	2SC4081 S
D1	1790000490	Diode	HSM88AS-TR

ManualsPlus.com

[DET UNIT]

REF. NO.	ORDER NO.	DESCRIPTION	
FI1	2020000550	Ceramic	CFUM455E
X1	6070000060	Discriminator	CDBM455C7
X2	6050005010	Crystal	CR-214
R1	7030003480	Resistor	ERJ3GEYJ 222 V (2.2 kΩ)
R2	7030003440	Resistor	ERJ3GEYJ 102 V (1 kΩ)
R3	7030003520	Resistor	ERJ3GEYJ 472 V (4.7 kΩ)
R4	7030003460	Resistor	ERJ3GEYJ 152 V (1.5 kΩ)
R5	7310002590	Trimmer	RV-109 (RH03A3AJ3X0BA) 222
R6	7030003550	Resistor	ERJ3GEYJ 822 V (8.2 kΩ)
R7	7030003560	Resistor	ERJ3GEYJ 103 V (10 kΩ)
R8	7030003480	Resistor	ERJ3GEYJ 222 V (2.2 kΩ)
R9	7030003400	Resistor	ERJ3GEYJ 471 V (470 Ω)
R10	7030003520	Resistor	ERJ3GEYJ 472 V (4.7 kΩ)
R11	7030003730	Resistor	ERJ3GEYJ 274 V (270 kΩ)
R13	7030003680	Resistor	ERJ3GEYJ 104 V (100 kΩ)
R14	7030003800	Resistor	ERJ3GEYJ 105 V (1 MΩ)
R16	7030003630	Resistor	ERJ3GEYJ 393 V (39 kΩ)
R19	7030003400	Resistor	ERJ3GEYJ 471 V (470 Ω)
R20	7030003400	Resistor	ERJ3GEYJ 471 V (470 Ω)
R23	7030003440	Resistor	ERJ3GEYJ 102 V (1 kΩ)
R25	7030003840	Resistor	ERJ3GEYJ 225 V (2.2 MΩ)
R26	7030003490	Resistor	ERJ3GEYJ 272 V (2.7 kΩ)
R27	7030003520	Resistor	ERJ3GEYJ 472 V (4.7 kΩ)
R28	7030003680	Resistor	ERJ3GEYJ 104 V (100 kΩ)
R29	7030003760	Resistor	ERJ3GEYJ 474 V (470 kΩ)
R30	7030003630	Resistor	ERJ3GEYJ 393 V (39 kΩ)
R31	7030003640	Resistor	ERJ3GEYJ 473 V (47 kΩ)
R32	7030003430	Resistor	ERJ3GEYJ 821 V (820 Ω)
R33	7030003730	Resistor	ERJ3GEYJ 274 V (270 kΩ)
C1	4030004760	Ceramic	C2012 F 1E 104Z-T
C2	4030006740	Ceramic	C1608 SL 1H 820J-T
C3	4030004760	Ceramic	C2012 F 1E 104Z-T
C4	4030004760	Ceramic	C2012 F 1E 104Z-T
C5	4030004760	Ceramic	C2012 F 1E 104Z-T
C6	4030006640	Ceramic	C1608 SL 1H 180J-T
C7	4030006720	Ceramic	C1608 SL 1H 560J-T
C8	4030006860	Ceramic	C1608 JB 1H 102K-T
C10	4030006860	Ceramic	C1608 JB 1H 102K-T
C11	4030006850	Ceramic	C1608 JB 1H 471K-T
C12	4030006860	Ceramic	C1608 JB 1H 102K-T
C13	4030006860	Ceramic	C1608 JB 1H 102K-T
C14	4030006860	Ceramic	C1608 JB 1H 102K-T
C15	4030006690	Ceramic	C1608 SL 1H 330J-T
C16	4030006860	Ceramic	C1608 JB 1H 102K-T
C17	4030004760	Ceramic	C2012 F 1E 104Z-T
C19	4030006890	Ceramic	C1608 JF 1H 103Z-T
C20	4030006900	Ceramic	C1608 JB 1E 103K-T
C21	4030006860	Ceramic	C1608 JB 1H 102K-T
C22	4030005110	Ceramic	C2012 B 1E 473K-T
C24	4030005110	Ceramic	C2012 B 1E 473K-T
C25	4030005110	Ceramic	C2012 B 1E 473K-T
C26	4030006860	Ceramic	C1608 JB 1H 102K-T
C27	4030006890	Ceramic	C1608 JF 1H 103Z-T
C28	4030006850	Ceramic	C1608 JB 1H 471K-T
C29	4030006890	Ceramic	C1608 JF 1H 103Z-T
C30	4030006890	Ceramic	C1608 JF 1H 103Z-T
EP1	0910020415	P.C. Board	B 1962E
EP2	6910003110	Lead Frame	HFB2.0-0.7-8

[REG UNIT]

REF. NO.	ORDER NO.	DESCRIPTION	
IC1	1180000530	IC	S-81250HG-RD
IC2	1130004170	IC	TC4S01F
IC3	1130004170	IC	TC4S01F
Q1	1530002280	Transistor	2SC4081 S
Q2	1510000510	Transistor	2SA1576 R
Q3	1530002280	Transistor	2SC4081 S
Q4	1520000200	Transistor	2SB798 DK
Q5	1530002280	Transistor	2SC4081 S
Q6	1510000500	Transistor	2SA1162-GR
D1	1750000160	Diode	DA114
D2	1750000160	Diode	DA114
D3	1750000160	Diode	DA114
R1	7030003400	Resistor	ERJ3GEYJ 471 V (470 Ω)
R2	7030003520	Resistor	ERJ3GEYJ 472 V (4.7 kΩ)
R3	7030003560	Resistor	ERJ3GEYJ 103 V (10 kΩ)
R7	7030003560	Resistor	ERJ3GEYJ 103 V (10 kΩ)
R8	7030003560	Resistor	ERJ3GEYJ 103 V (10 kΩ)
C1	4030006850	Ceramic	C1608 JB 1H 471K-T
C2	4510003160	Electrolytic	16 RC2 22 µF
C3	4030006850	Ceramic	C1608 JB 1H 471K-T
C4	4510001320	Electrolytic	6R3 MS5 47 µF
C5	4030006850	Ceramic	C1608 JB 1H 471K-T
C6	4510003190	Electrolytic	6.3 RC2 47 µF
C7	4030006850	Ceramic	C1608 JB 1H 471K-T
C8	4030006850	Ceramic	C1608 JB 1H 471K-T
C9	4030006850	Ceramic	C1608 JB 1H 471K-T
C10	4030006850	Ceramic	C1608 JB 1H 471K-T
C11	4510003190	Electrolytic	6.3 RC2 47 µF
EP1	0910020125	P.C. Board	B 1923E
EP2	6910003110	Lead Frame	HFB2.0-0.7-8

[RF UNIT]

REF. NO.	ORDER NO.	DESCRIPTION	
Q1	1530002570	Transistor	2SC4405-3
Q2	1530002560	Transistor	2SC4403-3
D1	1790000620	Diode	MA77
D2	1790000640	Diode	MA363B
D3	1790000620	Diode	MA77
D4	1790000640	Diode	MA363B
D5	1790000640	Diode	MA363B
D6	1790000620	Diode	MA77
L1	6150003120	Coil	LS-321
L2	6150003120	Coil	LS-321
L3	6150003430	Coil	LS-378
R1	7030003560	Resistor	ERJ3GEYJ 103 V (10 kΩ)
R2	7030003680	Resistor	ERJ3GEYJ 104 V (100 kΩ)
R3	7030003240	Resistor	ERJ3GEYJ 220 V (22 Ω)
R4	7030003560	Resistor	ERJ3GEYJ 103 V (10 kΩ)
R5	7030003280	Resistor	ERJ3GEYJ 470 V (47 Ω)
R6	7030003560	Resistor	ERJ3GEYJ 103 V (10 kΩ)

ManualsPlus.com

[RF UNIT]

REF. NO.	ORDER NO.	DESCRIPTION	
R7	7030003680	Resistor	ERJ3GEYJ 104 V (100 kΩ)
R8	7030003680	Resistor	ERJ3GEYJ 104 V (100 kΩ)
R9	7030003560	Resistor	ERJ3GEYJ 103 V (10 kΩ)
R10	7030003580	Resistor	ERJ3GEYJ 153 V (15 kΩ)
R11	7030003520	Resistor	ERJ3GEYJ 472 V (4.7 kΩ)
R14	7030003330	Resistor	ERJ3GEYJ 121 V (120 Ω)
C1	4030006640	Ceramic	C1608 SL 1H 180J-T
C2	4030006690	Ceramic	C1608 SL 1H 330J-T
C3	4030006580	Ceramic	C1608 SL 1H 070D-T
C4	4030006620	Ceramic	C1608 SL 1H 120J-T
C5	4030006850	Ceramic	C1608 JB 1H 471K-T
C6	4030006580	Ceramic	C1608 SL 1H 070D-T
C7	4030006720	Ceramic	C1608 SL 1H 560J-T
C8	4030006520	Ceramic	C1608 SL 1H 010C-T
C9	4030006580	Ceramic	C1608 SL 1H 070D-T
C10	4030006860	Ceramic	C1608 JB 1H 102K-T
C11	4030006720	Ceramic	C1608 SL 1H 560J-T
C12	4030006580	Ceramic	C1608 SL 1H 070D-T
C13	4030006860	Ceramic	C1608 JB 1H 102K-T
C18	4030006860	Ceramic	C1608 JB 1H 102K-T
C20	4030006860	Ceramic	C1608 JB 1H 102K-T
C21	4030006860	Ceramic	C1608 JB 1H 102K-T
C22	4030006860	Ceramic	C1608 JB 1H 102K-T
EP1	0910020173	P.C. Board	B 1945C
EP2	0910020185	P.C. Board	B 1946E
EP3	6910003110	Lead Frame	HFB2.0-0.7-8

[APC UNIT]

REF. NO.	ORDER NO.	DESCRIPTION	
Q1	1520000270	Transistor	2SB1182 Q
Q2	1530002280	Transistor	2SC4081 S
Q3	1590000620	Transistor	FMS1
Q4	1520000270	Transistor	2SB1182 Q
Q5	1530002280	Transistor	2SC4081 S
D1	1750000130	Diode	DA204U
D2	1160000050	Diode	DAP202U
R1	7030003520	Resistor	ERJ3GEYJ 472 V (4.7 kΩ)
R2	7030003770	Resistor	ERJ3GEYJ 564 V (560 kΩ)
R3	7030003720	Resistor	ERJ3GEYJ 224 V (220 kΩ)
R6	7030003600	Resistor	ERJ3GEYJ 223 V (22 kΩ)
R7	7030003670	Resistor	ERJ3GEYJ 823 V (82 kΩ)
R8	7030003440	Resistor	ERJ3GEYJ 102 V (1 kΩ)
R9	7030003440	Resistor	ERJ3GEYJ 102 V (1 kΩ)
R11	7030003600	Resistor	ERJ3GEYJ 223 V (22 kΩ)
R12	7030003480	Resistor	ERJ3GEYJ 222 V (2.2 kΩ)
R13	7030000440	Resistor	MCR10EZHJ 3.3 kΩ (332)
C1	4030006850	Ceramic	C1608 JB 1H 471K-T
C2	4030006850	Ceramic	C1608 JB 1H 471K-T
C2	4510003160	Electrolytic	16 RC2 22 µF
C3	4030006850	Ceramic	C1608 JB 1H 471K-T
C4	4510001320	Electrolytic	6R3 MS5 47 µF
C5	4030006850	Ceramic	C1608 JB 1H 471K-T
C6	4030006850	Ceramic	C1608 JB 1H 471K-T
C6	4510003190	Electrolytic	6.3 RC2 47 µF
C7	4030004760	Ceramic	C2012 F 1E 104Z-T
C9	4030006850	Ceramic	C1608 JB 1H 471K-T

[APC UNIT]

REF. NO.	ORDER NO.	DESCRIPTION	
C10	4030006850	Ceramic	C1608 JB 1H 471K-T
C11	4030006850	Ceramic	C1608 JB 1H 471K-T
C11	4510003190	Electrolytic	6.3 RC2 47 µF
EP1	0910020114	P.C. Board	B 1921D
EP2	6910003110	Lead Frame	HFB2.0-0.7-8

[PLL UNIT]

REF. NO.	ORDER NO.	DESCRIPTION	
IC1	1120001550	IC	M54959FP
IC2	1130004200	IC	TC4S66F
Q1	1560000340	FET	2SK210-Y
Q2	1560000430	FET	2SK302-GR
Q3	1530002560	Transistor	2SC4403-3
Q4	1530002560	Transistor	2SC4403-3
Q5	1530002560	Transistor	2SC4403-3
Q6	1560000540	FET	2SK880-Y
Q7	1590000970	Transistor	FMA2
Q8	1590000430	Transistor	DTC144EU
Q9	1590000440	Transistor	DTA143ZU
Q10	1560000540	FET	2SK880-Y
D1	1790000530	Diode	MA333
D2	1790000540	Diode	MA338
D4	1790000660	Diode	MA728
X1	6050005790	Crystal	CR-257
L1	6110001580	Coil	LA-238
L2	6110002150	Coil	LA-385
L3	6200000860	Coil	LQH 3N 1R8M
L4	6200000820	Coil	LQH 3N R82M
L5	6200000260	Coil	LQN 2A R10K
L6	6200000260	Coil	LQN 2A R10K
R1	7030003450	Resistor	ERJ3GEYJ 122 V (1.2 kΩ)
R2	7030003320	Resistor	ERJ3GEYJ 101 V (100 Ω)
R3	7030003200	Resistor	ERJ3GEYJ 100 V (10 Ω)
R4	7030003280	Resistor	ERJ3GEYJ 470 V (47 Ω)
R5	7030003450	Resistor	ERJ3GEYJ 122 V (1.2 kΩ)
R6	7030003610	Resistor	ERJ3GEYJ 273 V (27 kΩ)
R7	7030003200	Resistor	ERJ3GEYJ 100 V (10 Ω)
R8	7030003660	Resistor	ERJ3GEYJ 683 V (68 kΩ)
R9	7030003660	Resistor	ERJ3GEYJ 683 V (68 kΩ)
R10	7030003650	Resistor	ERJ3GEYJ 563 V (56 kΩ)
R11	7030003420	Resistor	ERJ3GEYJ 681 V (680 Ω)
R12	7030003390	Resistor	ERJ3GEYJ 391 V (390 Ω)
R13	7030003420	Resistor	ERJ3GEYJ 681 V (680 Ω)
R14	7030003560	Resistor	ERJ3GEYJ 103 V (10 kΩ)
R15	7030003720	Resistor	ERJ3GEYJ 224 V (220 kΩ)
R16	7030003400	Resistor	ERJ3GEYJ 471 V (470 Ω)
R17	7030003500	Resistor	ERJ3GEYJ 332 V (3.3 kΩ)
R18	7030003550	Resistor	ERJ3GEYJ 822 V (8.2 kΩ)
R19	7030003320	Resistor	ERJ3GEYJ 101 V (100 Ω)
C1	4030006750	Ceramic	C1608 SL 1H 101J-T
C2	4030006540	Ceramic	C1608 SL 1H 030C-T
C3	4030006570	Ceramic	C1608 SL 1H 060D-T

ManualsPlus.com

[PLL UNIT]

REF. NO.	ORDER NO.	DESCRIPTION	
C4	4030006860	Ceramic	C1608 JB 1H 102K-T
C5	4030006510	Ceramic	C1608 SL 1H 0R5C-T
C6	4030006900	Ceramic	C1608 JB 1E 103K-T
C7	4030006760	Ceramic	C1608 SL 1H 121J-T
C9	4030006860	Ceramic	C1608 JB 1H 102K-T
C10	4030006560	Ceramic	C1608 SL 1H 050C-T
C11	4030006560	Ceramic	C1608 SL 1H 050C-T
C12	4030006860	Ceramic	C1608 JB 1H 102K-T
C13	4030006510	Ceramic	C1608 SL 1H 0R5C-T
C14	4030006550	Ceramic	C1608 SL 1H 040C-T
C15	4030006580	Ceramic	C1608 SL 1H 070D-T
C16	4030006580	Ceramic	C1608 SL 1H 070D-T
C17	4030006630	Ceramic	C1608 SL 1H 150J-T
C18	4030004760	Ceramic	C2012 F 1E 104Z-T
C19	4030004760	Ceramic	C2012 F 1E 104Z-T
C20	4030006850	Ceramic	C1608 JB 1H 471K-T
C21	4030006860	Ceramic	C1608 JB 1H 102K-T
C22	4610001260	Trimmer	ECRJA020E12W
C23	4030007030	Ceramic	C1608 CH 1H 150J-T
C24	4030007080	Ceramic	C1608 CH 1H 390J-T
C25	4030006850	Ceramic	C1608 JB 1H 471K-T
C26	4030006850	Ceramic	C1608 JB 1H 471K-T
C27	4030004760	Ceramic	C2012 F 1E 104Z-T
C28	4030004760	Ceramic	C2012 F 1E 104Z-T
C29	4550000460	Tantalum	TESVA 1C 105M1-8L
C30	4030006850	Ceramic	C1608 JB 1H 471K-T
C31	4030006850	Ceramic	C1608 JB 1H 471K-T
C32	4030006510	Ceramic	C1608 SL 1H 0R5C-T
C33	4030006560	Ceramic	C1608 SL 1H 050C-T
C34	4030006560	Ceramic	C1608 SL 1H 050C-T
C35	4030006710	Ceramic	C1608 SL 1H 470J-T
C36	4030006710	Ceramic	C1608 SL 1H 470J-T
C37	4030006710	Ceramic	C1608 SL 1H 470J-T
C38	4030006710	Ceramic	C1608 SL 1H 470J-T
C39	4030006510	Ceramic	C1608 SL 1H 0R5C-T
C40	4030006850	Ceramic	C1608 JB 1H 471K-T
C41	4030006510	Ceramic	C1608 SL 1H 0R5C-T
EP1	0910020007	P.C. Board	B 1911G

[PRT UNIT]

REF. NO.	ORDER NO.	DESCRIPTION	
Q1	1520000200	Transistor	2SB798 DK
Q2	1530002280	Transistor	2SC4081 S
D1	1790000680	Diode	SB20-03P
D2	1790000670	Diode	SB07-03C
D4	1730000520	Zener	RD 20E B2
D5	1790000590	Diode	MA110
D6	1730002160	Zener	02CZ5.1-Z
D7	1790000590	Diode	MA110
D8	1790000670	Diode	SB07-03C-TA
D9	1790000680	Diode	SB20-03P-TD
R1	7030003250	Resistor	ERJ3GEYJ 270 V (27 Ω)
R2	7030003380	Resistor	ERJ3GEYJ 331 V (330 Ω)
R3	7030003440	Resistor	ERJ3GEYJ 102 V (1 kΩ)
R4	7030003600	Resistor	ERJ3GEYJ 223 V (22 kΩ)
R5	7030003470	Resistor	ERJ3GEYJ 182 V (1.8 kΩ)
R6	7030003520	Resistor	ERJ3GEYJ 472 V (4.7 kΩ)
R7	7030003320	Resistor	ERJ3GEYJ 101 V (100 Ω)
R8	7030003440	Resistor	ERJ3GEYJ 102 V (1 kΩ)
R9	7030003250	Resistor	ERJ3GEYJ 270 V (27 Ω)

[PRT UNIT]

REF. NO.	ORDER NO.	DESCRIPTION	
R10	7030003230	Resistor	ERJ3GEYJ 180 V (18 Ω)
C1	4030006860	Ceramic	C1608 JB 1H 102K-T
C2	4030006860	Ceramic	C1608 JB 1H 102K-T
C3	4030006710	Ceramic	C1608 SL 1H 470J-T
C4	4030006860	Ceramic	C1608 JB 1H 102K-T
C5	4030006860	Ceramic	C1608 JB 1H 102K-T
C6	4030006860	Ceramic	C1608 JB 1H 102K-T
BT1	3030000270	NiCd Battery	P-03ER/F23G1
EP1	0910021454	P.C. Board	B 2278B

ManualsPlus.com

SECTION 9 OPTIONAL UNITS

9-1 UT-50 TONE SQUELCH UNIT

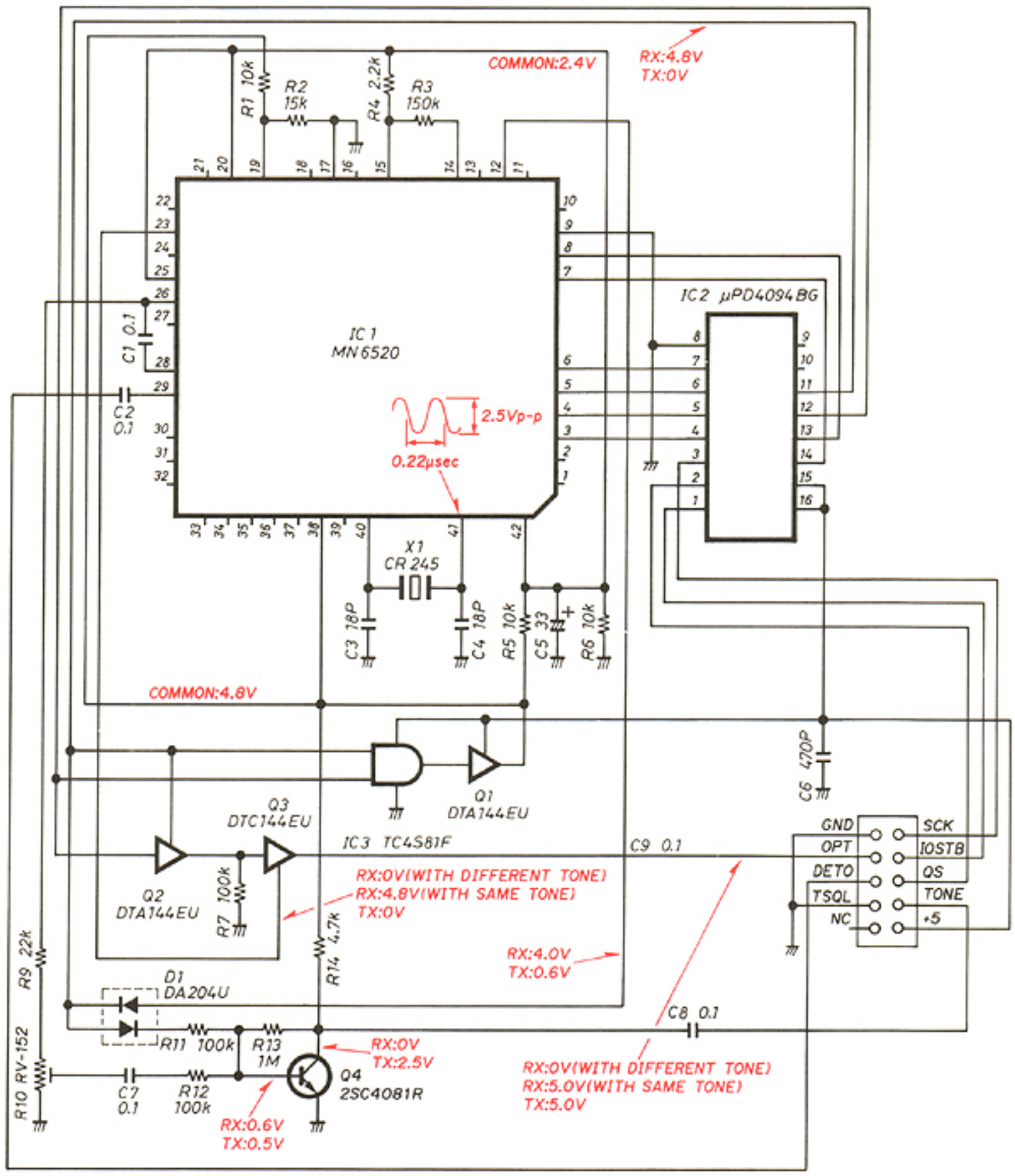

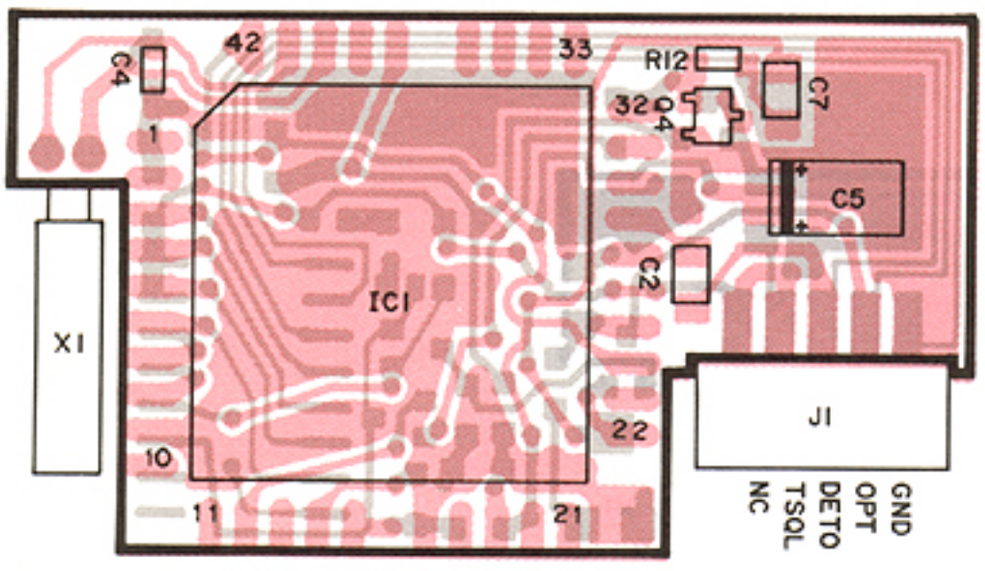

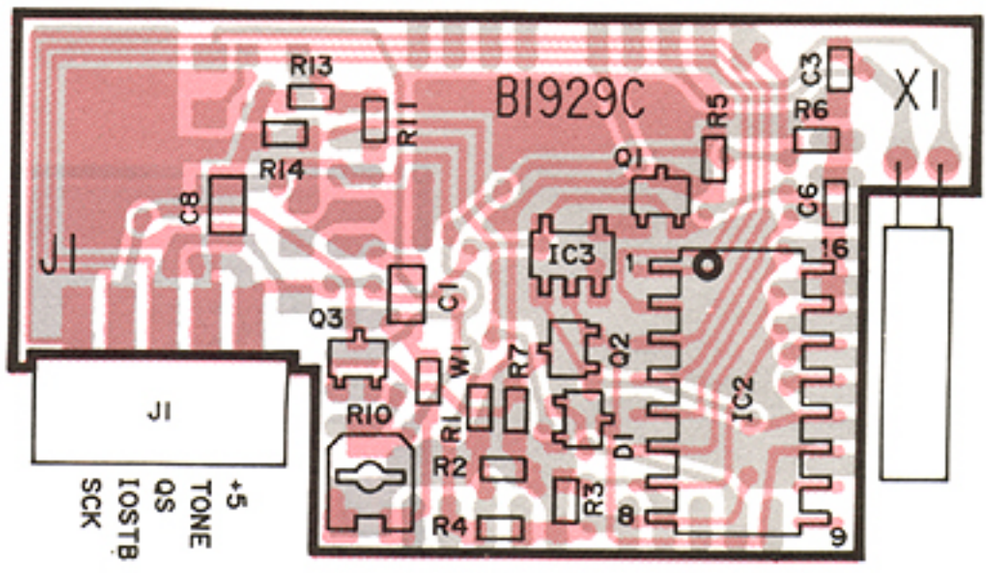

ManualsPlus.com

9-2 UT-51 TONE ENCODER UNIT

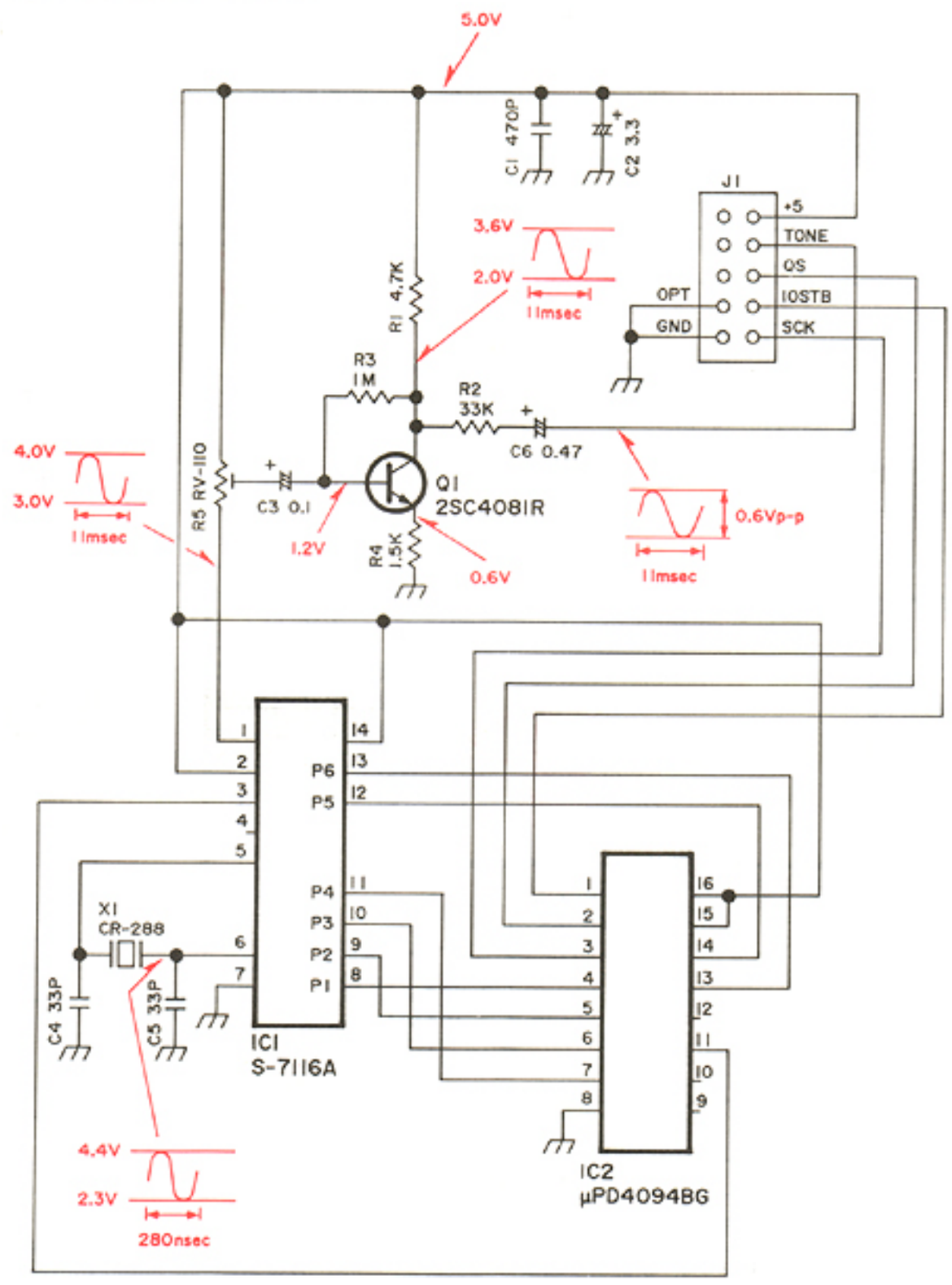

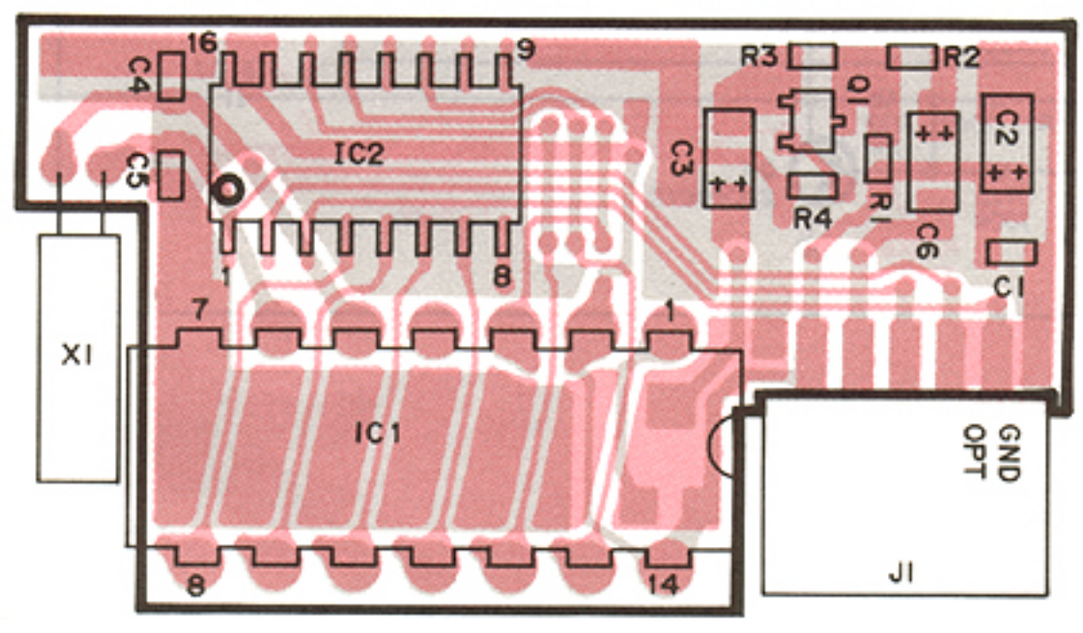

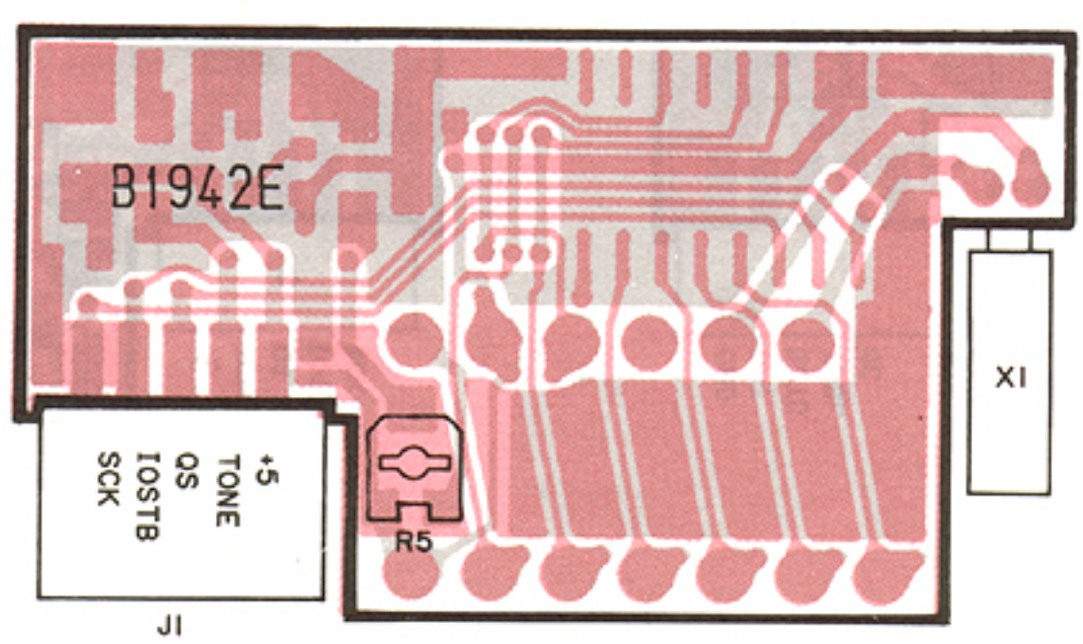

ManualsPlus.com

9-3 UT-49 DTMF DECODER UNIT

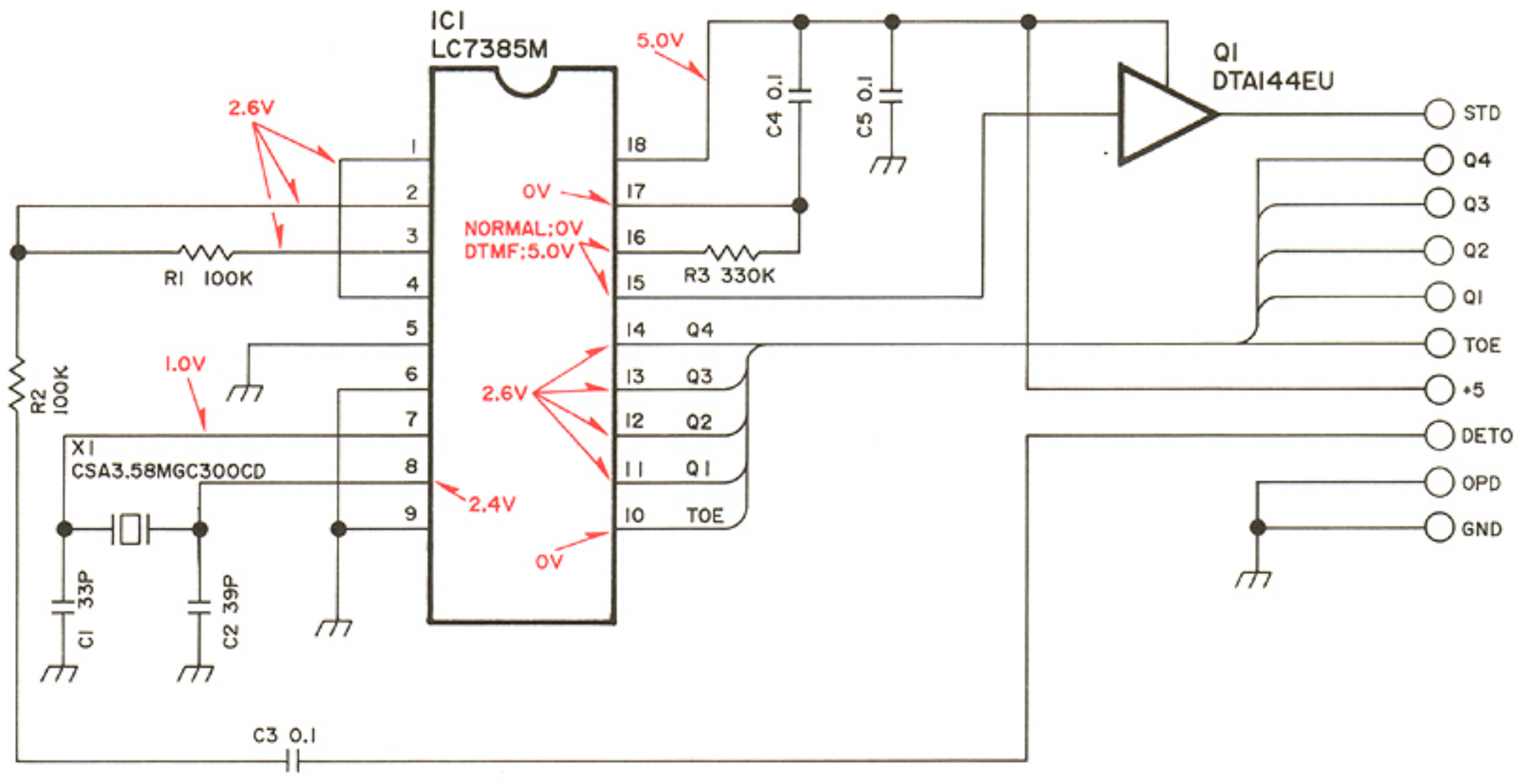

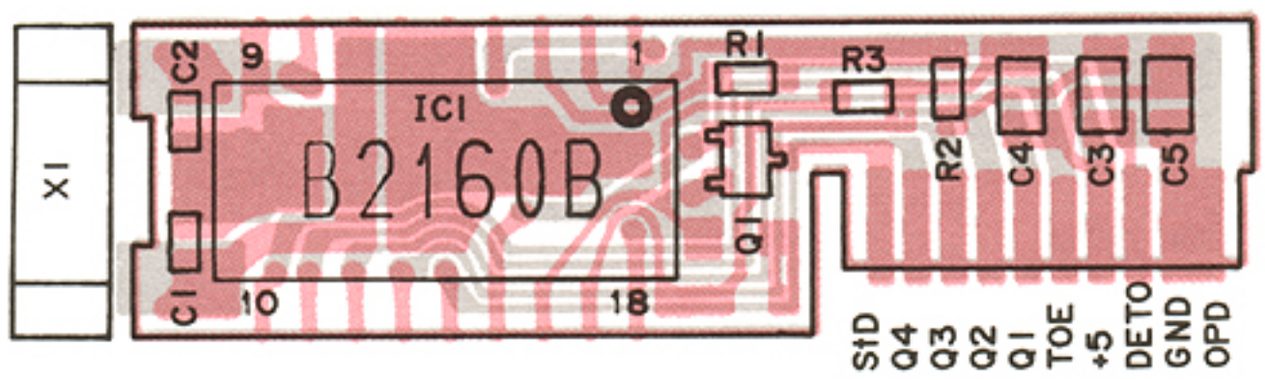

ManualsPlus.com

SECTION 10 VOLTAGE DIAGRAM

LOGIC UNIT

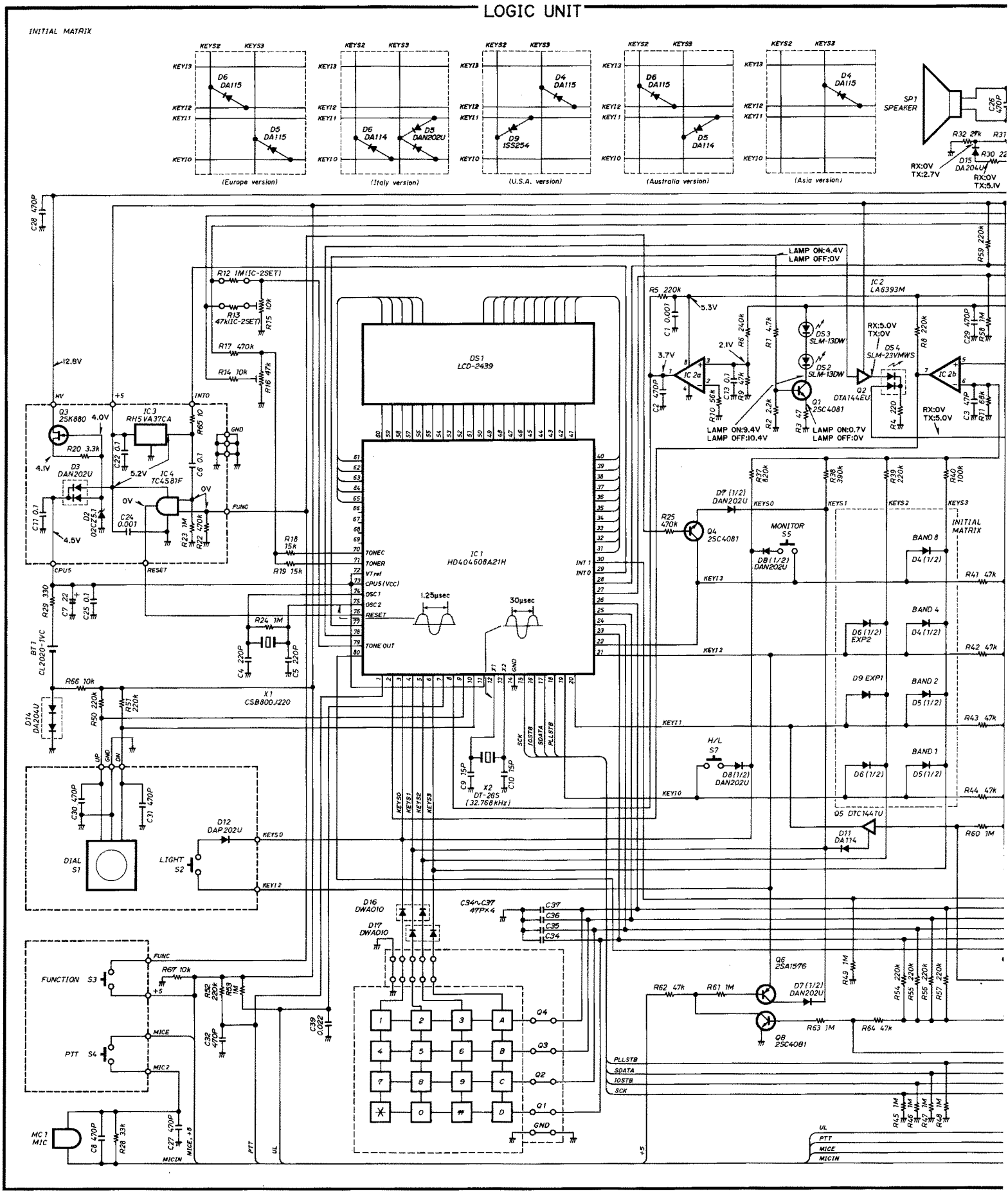

ManualsPlus.com

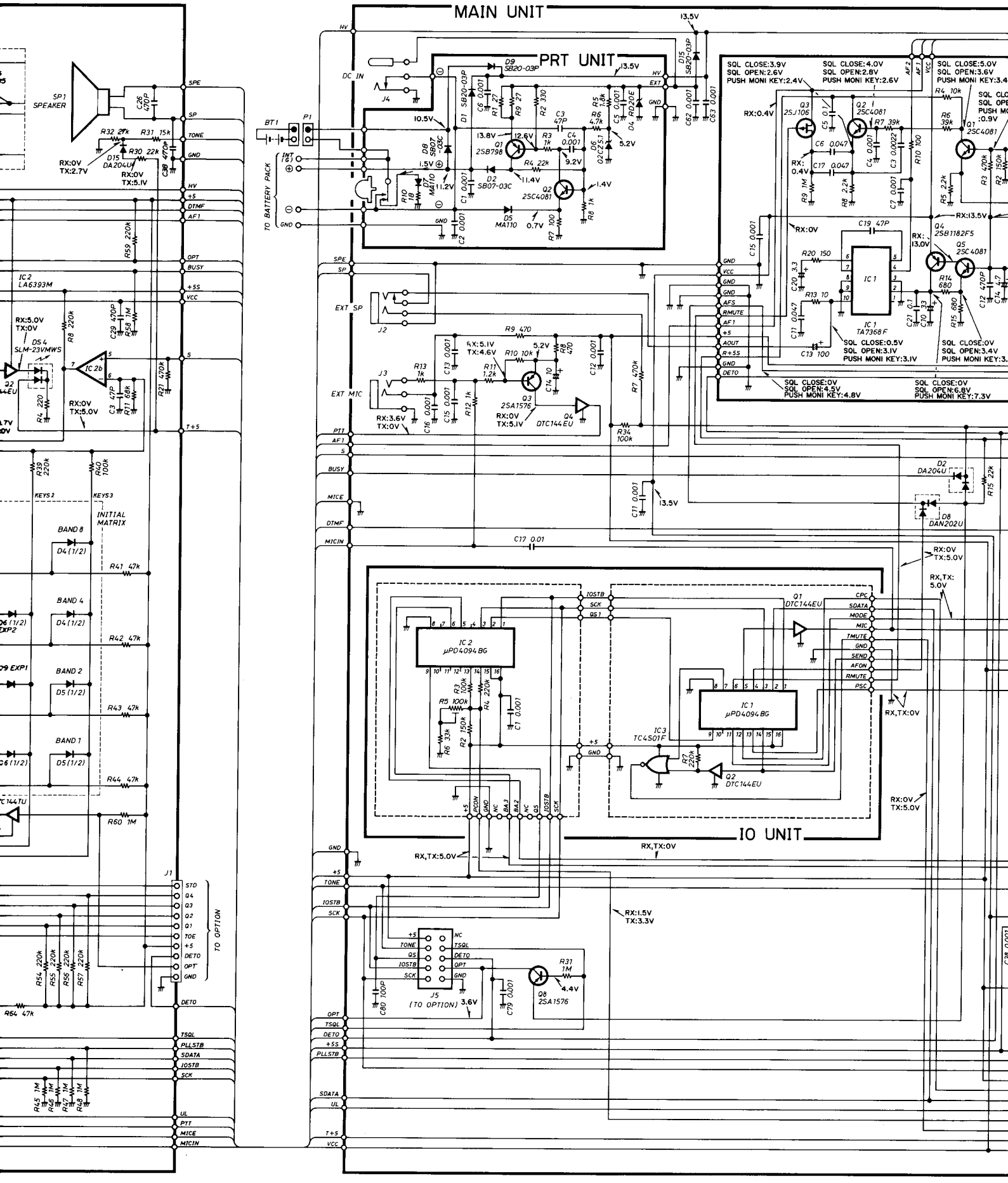

ManualsPlus.com

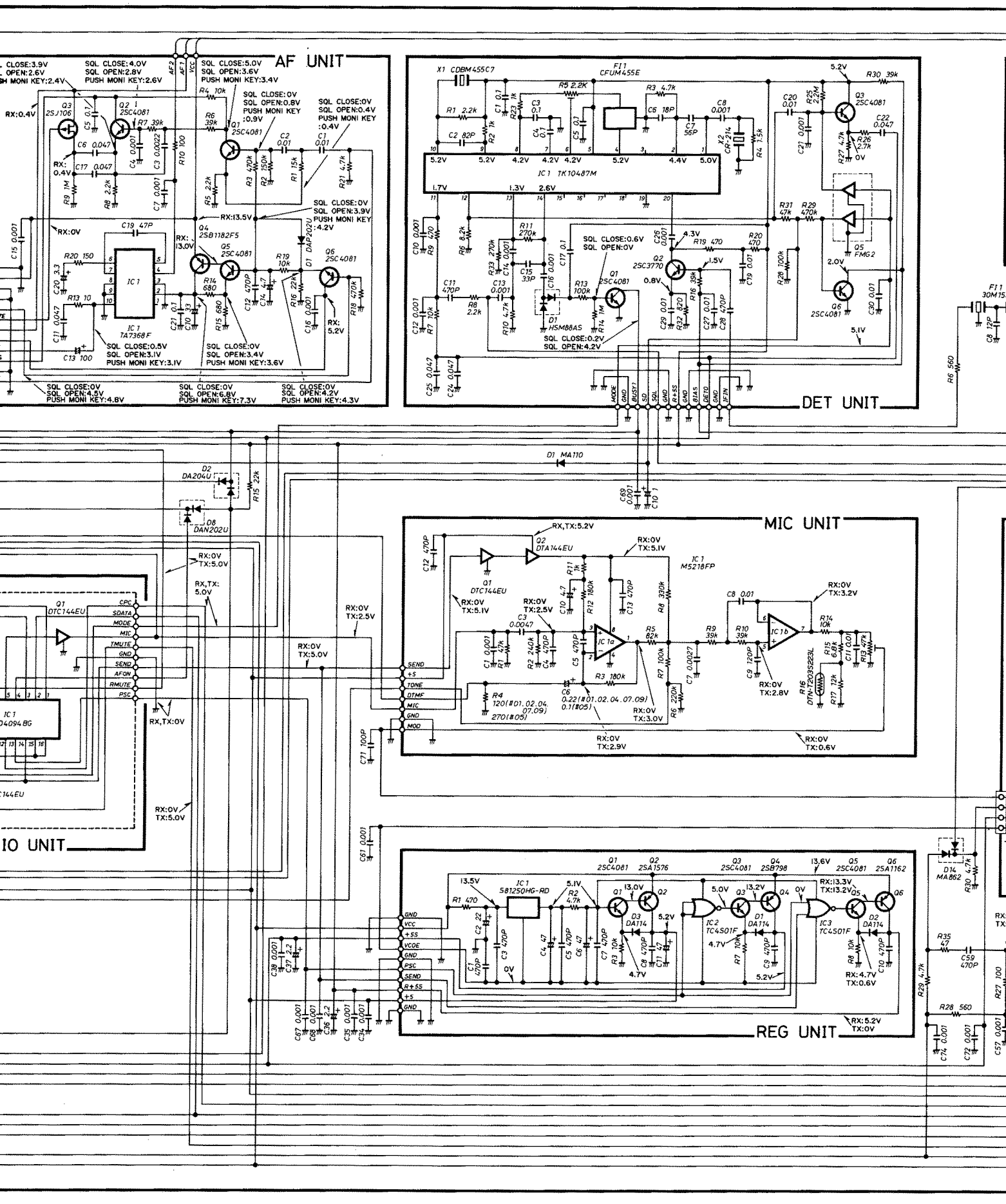

ManualsPlus.com

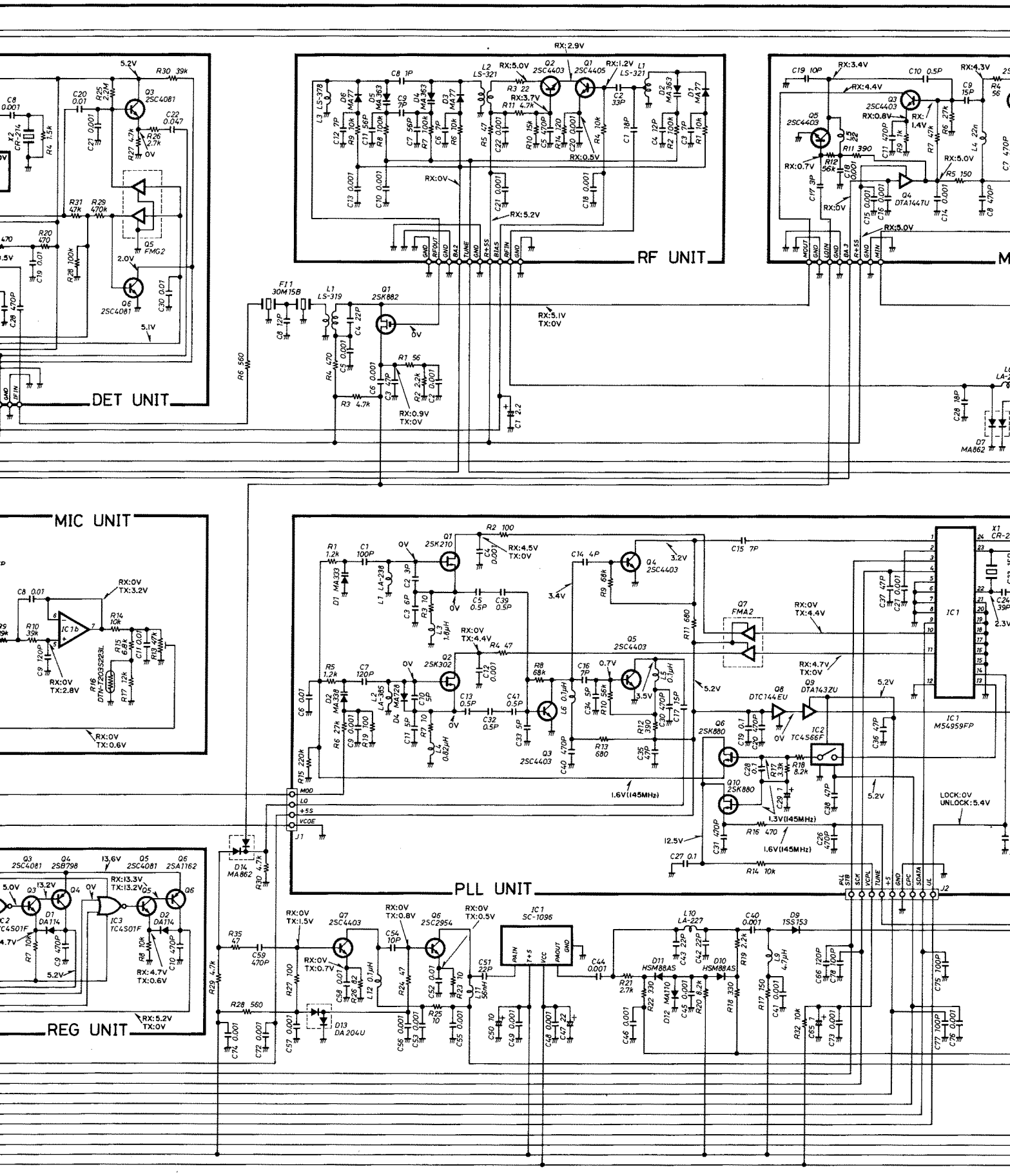

ManualsPlus.com

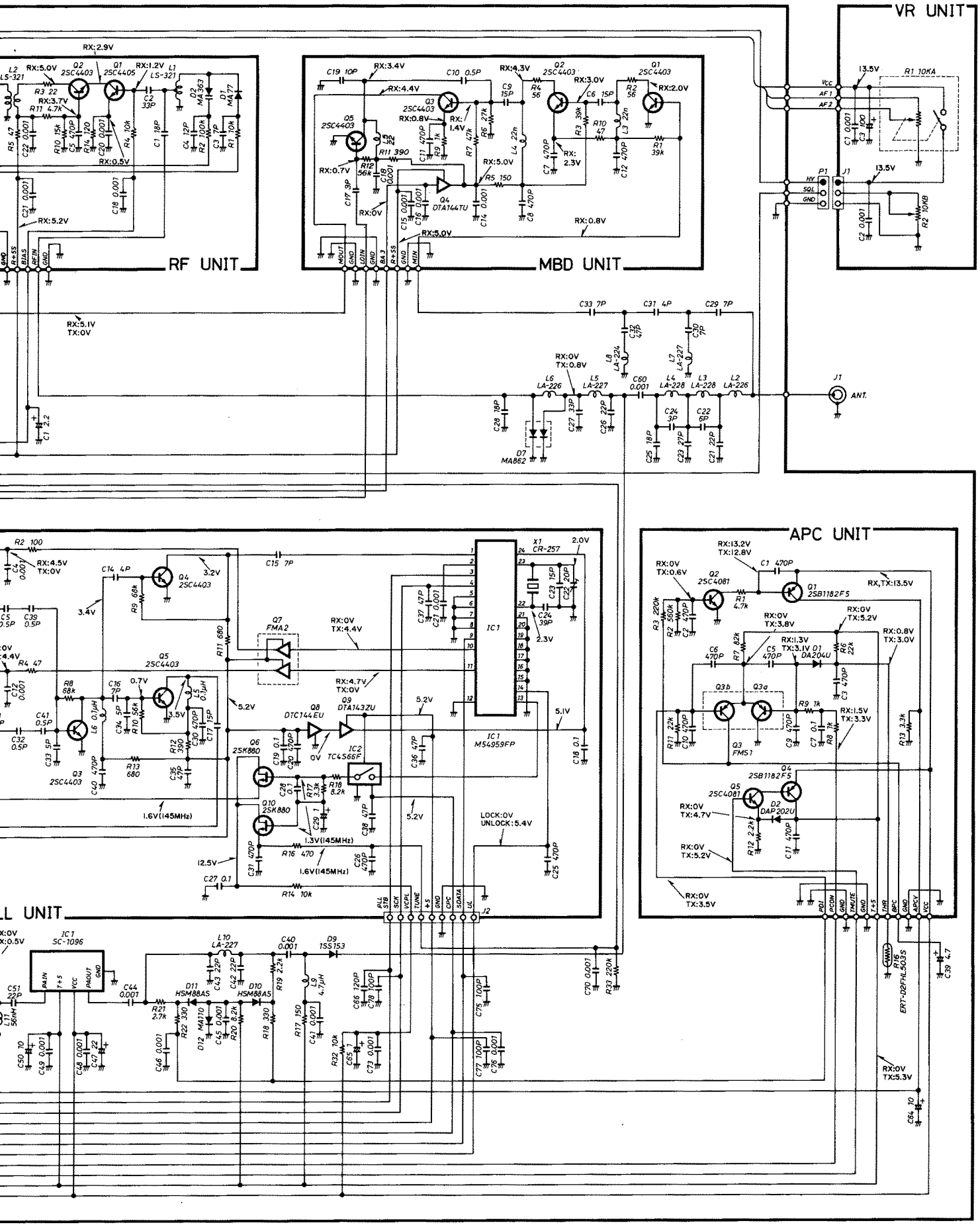

ManualsPlus.com

Icom Inc.

6-9-16, Kamihigashi, Hirano-ku, Osaka 547, Japan
Phone: 06 793 5301
Fax : 06 793 0013
Telex : 05277822 ICOMTR J

Icom America Inc.

<Corporate Headquarters>
2380 116th Avenue N.E., Bellevue, WA 98004, U.S.A.
Phone : (206) 454-8155
Fax : (206) 454-1509
Telex : 152210 ICOM AMER BVUE

<Customer Service>
Phone : (206) 454-7619

<Regional Customer Service Centers>
3150 Premier Drive, Suite 126, Irving, TX 75063, U.S.A.
Phone : (214) 550-7525
Fax : (214) 550-7423

1777 Phoenix Parkway, Suite 201, Atlanta, GA 30349, U.S.A.
Phone : (404) 991-6166
Fax : (404) 991-6327

Icom Canada

A Division of Icom America Inc.
3071 #5 Road, Unit 9, Richmond, B.C., V6X 2T4, Canada
Phone : (604) 273-7400
Fax : (604) 273-1900

Icom (Europe) GmbH

Communication Equipment
Himmelgeister Str. 100, 4000 Düsseldorf 1, W. Germany
Phone : 0211 346047
Fax : 0211 333639
Telex : 8588082 ICOM D

Icom (Australia) Pty. Ltd.

Incorporated In Victoria
7 Duke Street, Windsor, Victoria, 3181, Australia
Phone : 03 529 7582
Fax : 03 529 8485
Telex : AA 35521 ICOM AS

Icom (UK) Ltd.

Unit 9, Sea St., Herne Bay, Kent, CT6 8LD, U.K.
Phone : 0227 363859
Fax : 0227 360155
Telex : 965179 ICOM G

Icom France S.a

120 Route de Revel, BP4063, 31029 Toulouse Cedex, France
Phone : 61. 20. 31. 49
Fax : 61. 34. 05. 91
Telex : 521515 ICOM FRA

Count on us!

ManualsPlus.com

Icom Inc.
6-9-16, Kamihigashi, Hirano-ku, Osaka 547, Japan

A-5070H-S
Printed in Japan
Copyright © 1989 by Icom Inc.