ManualsPlus.com

ICOM

SERVICE MANUAL

1 kW HF LINEAR AMPLIFIER

IC-4KL

Icom Inc.

ManualsPlus.com

INTRODUCTION

This service manual describes the latest service information for the **IC-4KL** 1kW HF LINEAR AMPLIFIER and covers the following versions.

VERSION NUMBER	VERSION	MODEL
#02	U.S.A.	IC-4KL
#03	Europe	IC-4KL
#04	U.S.A.-1	IC-4KL
#05	France	IC-4KLF

To upgrade quality, any electric or mechanical part and internal circuits are subject to change without notice or obligation.

DANGER

HIGH VOLTAGE! NEVER touch the antenna connector or the power supply section in the linear amplifier while connecting the IC-4KL to an AC outlet.

NEVER carry the linear amplifier by yourself. At least two persons must carry the linear amplifier since it weighs approx. 36 kg (79.4 lb).

NEVER expose the IC-4KL to rain or moisture since fire or shock hazard could occur.

NEVER touch the IC-4KL with metal strips, wires, etc. These materials may cause fires and electric shocks.

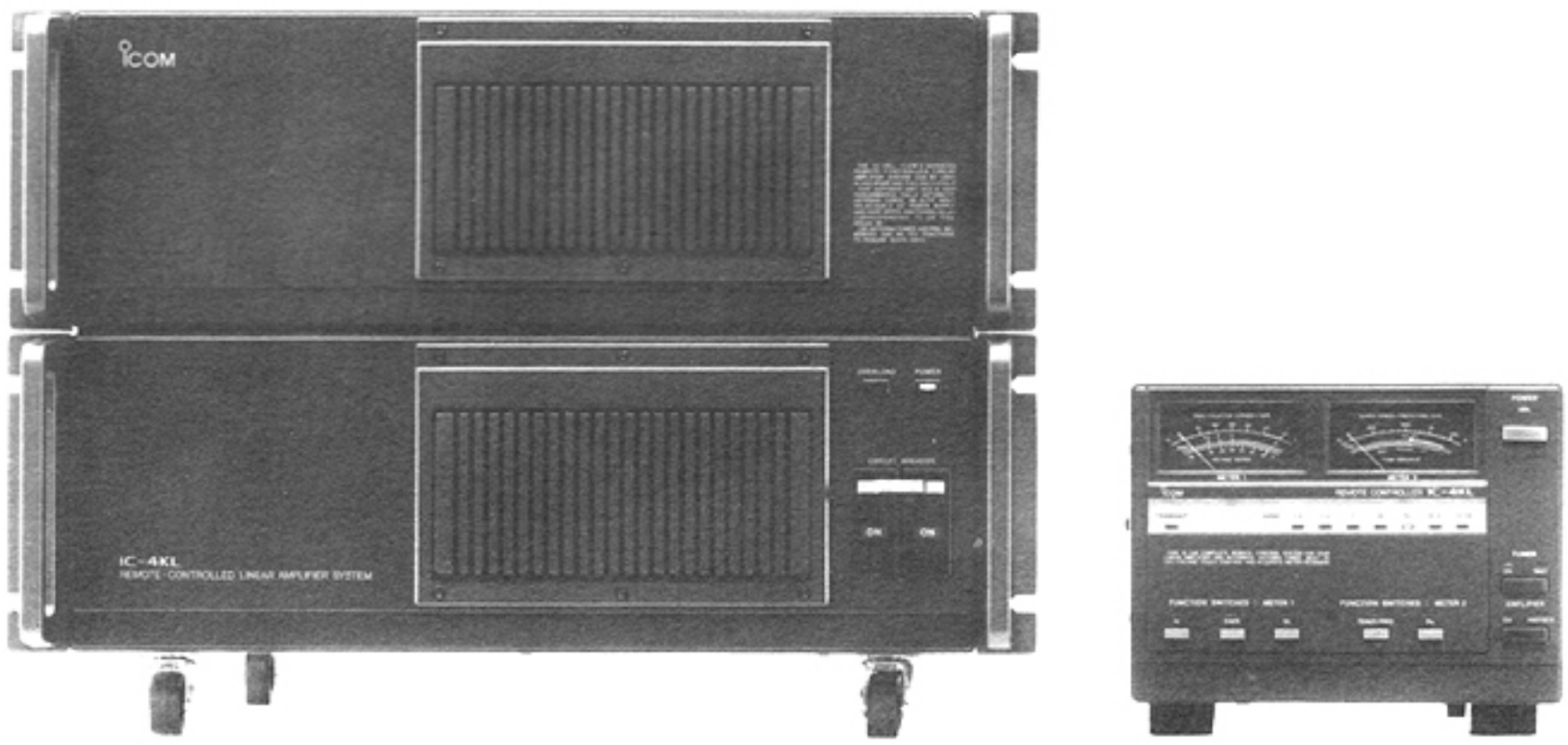

ORDERING PARTS

Be sure to include the following four points when ordering replacement parts:

1. 10-digit order numbers
2. Component part number and name
3. Equipment model name and unit name
4. Quantity required

< SAMPLE ORDER >

1140000980	IC	μPD7533C-077	IC-4KL	MAIN UNIT	5 pieces
5040001360	LED	TLG205	IC-4KL	CONTROL UNIT	10 pieces

∗ Addresses are provided on the inside back cover for your convenience.

REPAIR NOTE

1. Make sure a problem is internal before disassembling the linear amplifier or the remote controller.
2. **DO NOT** open the linear amplifier or the remote controller until the linear amplifier is disconnected from its power source.
3. **DO NOT** force any of the variable components. Turn them slowly and smoothly.
4. **DO NOT** short any circuits or electronic parts. An insulated tuning tool MUST be used for all adjustments.
5. **DO NOT** keep power ON for a long time when the linear amplifier is defective.
6. **READ** the instructions of test equipment thoroughly before connecting equipment to the linear amplifier.

ManualsPlus.com

TABLE OF CONTENTS

SECTION 1 SPECIFICATIONS ..... **1–1~2**

SECTION 2 INSIDE VIEWS ..... **2–1~2**

SECTION 3 BLOCK DIAGRAM **3–1**

SECTION 4 CIRCUIT DESCRIPTION ..... **4–1~4**

4–1 LINEAR AMPLIFIER CIRCUITS 4–1
4–2 PROTECTION CIRCUITS 4–2
4–3 POWER SUPPLY CIRCUITS 4–4
4–4 OTHER CIRCUITS 4–4

SECTION 5 ADJUSTMENT PROCEDURES ..... **5–1~11**

5–1 PREPARATION BEFORE SERVICING 5–1
5–2 ADJUSTMENT PROCEDURES 1~5 5–2

SECTION 6 PARTS LIST ..... **6–1~8**

SECTION 7 MECHANICAL PARTS AND DISASSEMBLY ..... **7–1~8**

7–1 LINEAR AMPLIFIER UNIT 7–1
7–2 POWER SUPPLY UNIT 7–3
7–3 TUNER UNIT 7–5
7–4 CONTROLLER UNIT 7–7
7–5 ACCESSORIES 7–8

SECTION 8 BOARD LAYOUTS ..... **8–1~7**

8–1 TUNER UNIT 8–1
8–2 DET UNIT 8–1
8–3 REG UNIT 8–2
8–4 PA UNIT 8–2
8–5 CONTROL UNIT 8–3
8–6 DC–DC UNIT 8–3
8–7 ACC UNIT 8–4
8–8 CONTROL (D–SUB) UNIT 8–4
8–9 ACC (D–SUB) UNIT 8–4
8–10 COMBINR UNIT 8–5
8–11 SPLITR UNIT 8–5
8–12 FILTER UNIT 8–6
8–13 MAIN UNIT 8–7
8–14 SWR UNIT 8–7

SECTION 9 VOLTAGE DIAGRAMS ..... **9–1~2**

ManualsPlus.com

SECTION 1 SPECIFICATIONS

■ GENERAL

- Frequency coverage : 1.800 ~ 1.999 MHz ＊1
  3.500 ~ 3.999 MHz
  7.000 ~ 7.300 MHz
  10.100 ~ 10.150 MHz
  14.000 ~ 14.350 MHz
  18.068 ~ 18.168 MHz
  21.000 ~ 21.450 MHz
  24.890 ~ 24.990 MHz ＊2
  28.000 ~ 29.700 MHz ＊2
  ＊1 Matching guaranteed from 1.85 to 1.95 MHz.
  ＊2 The U.S.A. and U.S.A.–1 version do not cover the 24~28 MHz band range.

- Input impedance : 50 Ω (unbalanced)

- Duty cycle : 100% continuously one hour
  (at 200 ~ 240 V AC, +25 ℃ ; +77 °F)

- Power supply voltage : 100 ~ 120 V AC or 200 ~ 240 V AC ± 10%
  (Automatically switched)

- Usable temperature range : − 10 ℃ ~ +40 ℃ (+14 °F ~ +104 °F)

- Dimensions : Remote controller 200(W) × 149(H) × 341(D) mm
  7.9(W) × 5.9(H) × 13.4(D) in
  Linear amplifier 425(W) × 297(H) × 458.5(D) mm
  16.7(W) × 11.7(H) × 18.1(D) in
  (projections not included)

- Weight : Remote controller 2.7 kg (6.0 lb)
  Linear amplifier 36.0 kg (79.4 lb)

■ LINEAR AMPLIFIER

- Output power :

MODE	INPUT AC VOLTAGE	
	200 ~ 240 V AC	100 ~ 120 V AC
CW, RTTY	1 kW ＊	500 W
SSB	1 kW PEP ＊	500 W PEP

＊ 24.5 and 28 MHz bands : 800W

- Driving power : Max. 100 W

- Final transistor efficiency : More than 50% (at 1 kW output power)

- Spurious emissions : Less than − 60 dB

ManualsPlus.com

■ ANTENNA TUNER

• Output matching range	:	16.7 Ω ~ 150 Ω (when the TUNER switch is ON)
• Auto tuning accuracy	:	VSWR less than 1.2 : 1
• Insertion loss	:	Less than 0.5 dB (after tuning)

All stated specifications are subject to change without notice or obligation.

ManualsPlus.com

SECTION 2 INSIDE VIEWS

■ LINEAR AMPLIFIER UNIT

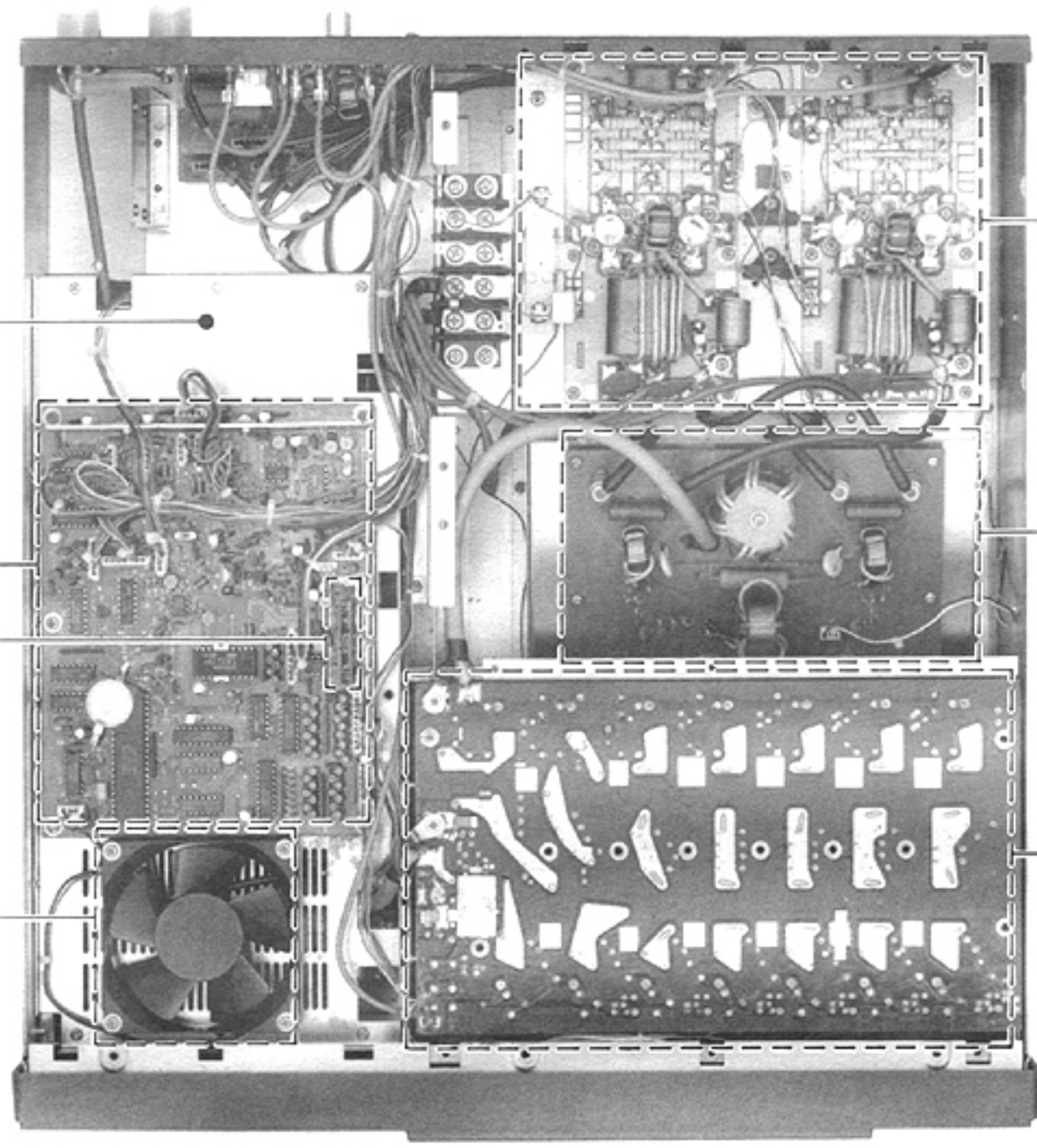

ManualsPlus.com

POWER SUPPLY UNIT

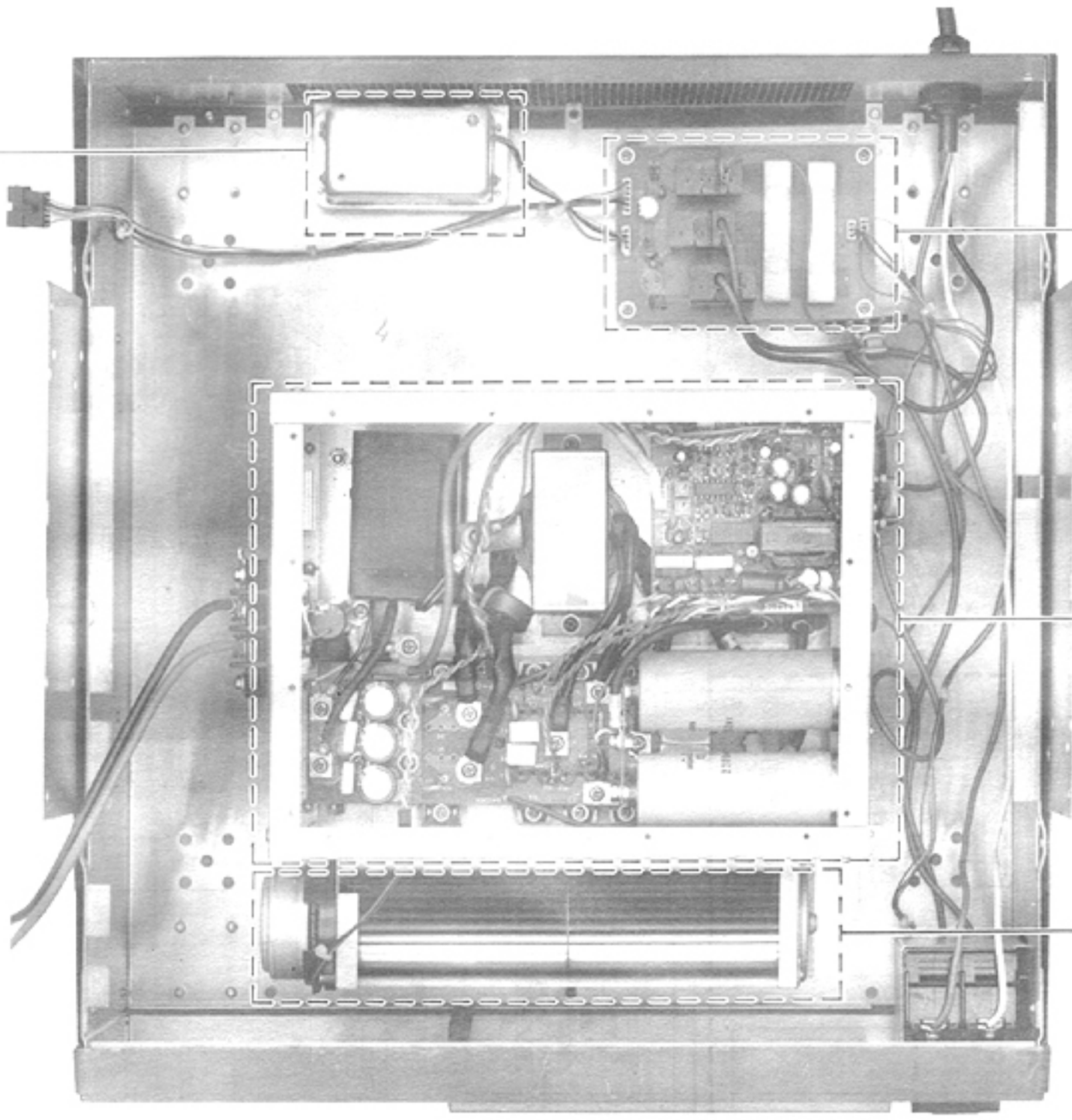

CONTROLLER UNIT

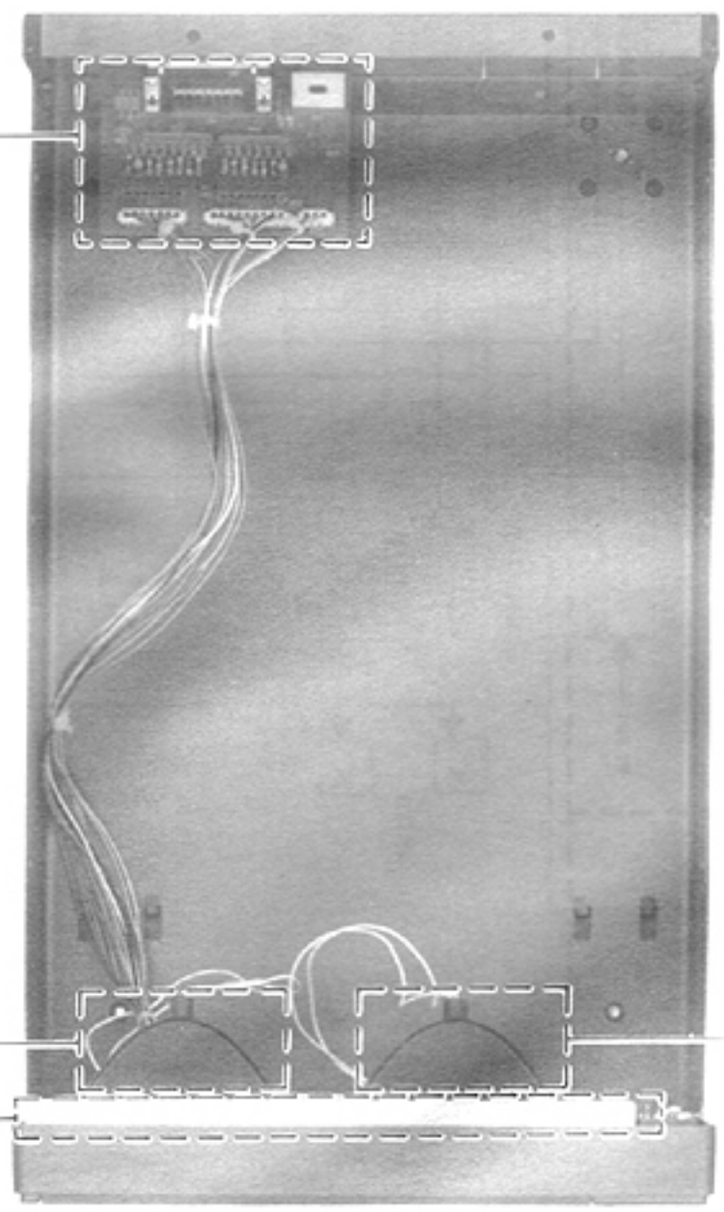

ManualsPlus.com

SECTION 3 BLOCK DIAGRAM

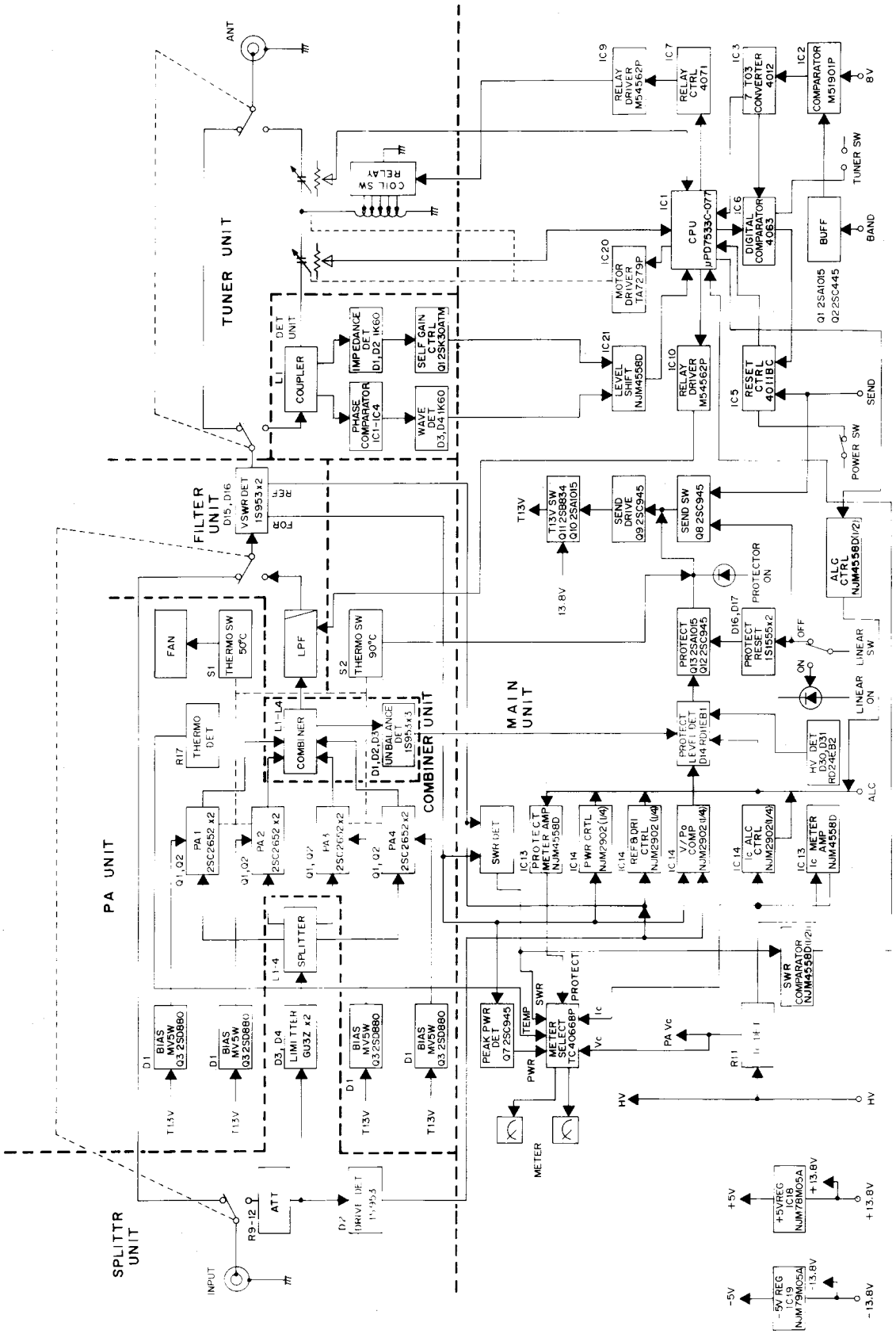

ManualsPlus.com

SECTION 4 CIRCUIT DESCRIPTION

4-1 LINEAR AMPLIFIER CIRCUITS

4-1-1 POWER SPLITTER CIRCUIT (SPLITR UNIT)

Output power from an exciter enters the SPLITTER UNIT via J1. The power passes through the bypass/amplifier relay (RL1) and is then applied to an attenuator (R9 ~ R12).

The attenuator has a 3 dB attenuation ratio and functions as an impedance converter. L1 converts the input impedance of 50 Ω to a 12.5 Ω output impedance.

The attenuated power then passes through the input limiter (D3, D4). The input limiter is activated when the input power voltage exceeds 40 V such as during momentary overdriving. The power is divided into four equal wattages (L2 ~ L4) which are applied to the PA UNIT.

Power splitter circuit

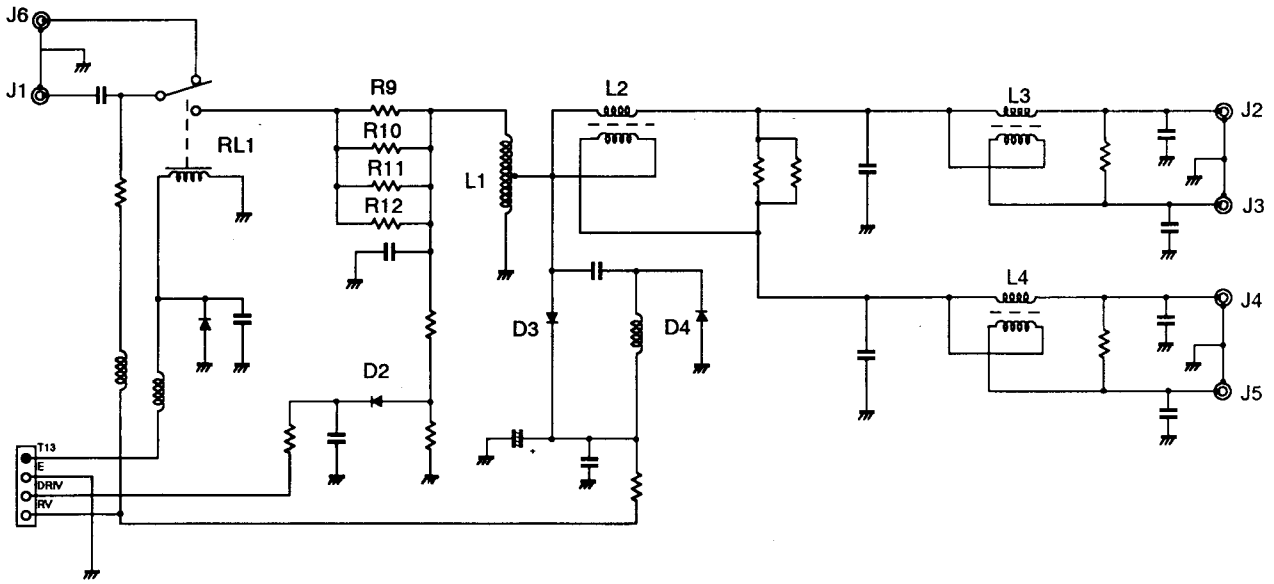

4-1-2 POWER AMPLIFIER CIRCUIT (PA UNITS)

One of these four wattages is applied to the wideband transformer (L1) where the input impedance is converted into nine equal parts. Impedance-converted power is power-amplified at the PA UNIT to up to 300 W. The power transistors (Q1, Q2) form a push-pull amplifier.

The power amplifier circuit has a negative feedback circuit (R1 ~ R4, R7, R8, C7) to keep response gain within 3 dB of all bands.

The bias circuit consists of Q3 and D1. D1 detects the temperature and controls bias voltage. Q3 amplifies the current to steady the idling current. The idling current is adjusted with R9.

The amplified power is then applied to the impedance conversion transformer (L4, L5) to convert the output impedance to 50 Ω. The output power is then applied to the COMBINER UNIT with a 50 Ω load.

4-1-3 POWER COMBINER CIRCUIT (COMBINR UNIT)

The output power from the PA UNIT is combined at L1 ~ L3 to obtain 1 kW of output power. When the output power from the PA UNIT is unbalanced, the detector (D1 ~ D3) outputs the negative voltage to the protector circuit via the "BAL" line.

The combined output power is impedance-converted at L4 to 50 Ω and then applied to the FILTER UNIT.

ManualsPlus.com

4-1-4 LOW-PASS FILTER CIRCUIT (FILTER UNIT)

The output power passes through the Chebyschev low-pass filter (one of 7 low-pass filters); this filter attenuates out-of-band signals to - 45 dB and is selected by band selecting relays (RL1 ~ RL14). The filtered output power is applied to a TUNER UNIT via a VSWR detector circuit.

Before passing through the low-pass filter

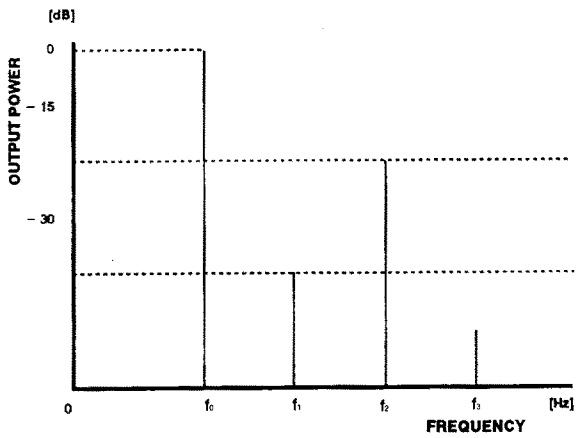

After passing through the low-pass filter

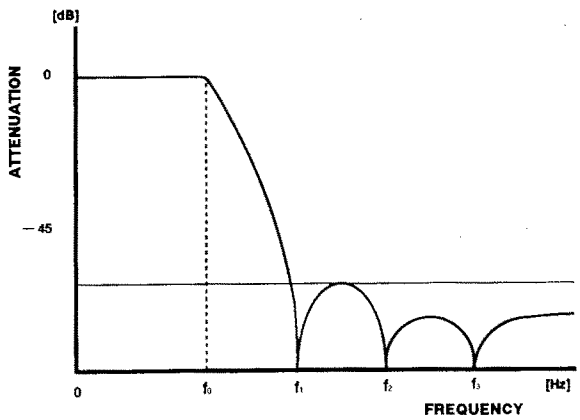

4-1-5 DETECTOR CIRCUIT (DET UNIT)

The antenna tuner has two detector circuits: an impedance component detector and a phase component detector.

Impedance components are picked up by L1 and detected by D1 and D2. D2 outputs negative voltage, D1 outputs positive voltage. Output voltage of the impedance detector is added to the voltage output from D1 and D2. When antenna impedance is higher than 50 Ω, output voltage is positive; when lower than 50 Ω, output voltage is negative.

Phase components are picked up by comparing the phases of the RF current and RF voltage. The RF current is detected by L1, R3 and R4. RF voltage is detected by C22 ~ C24. Both detector voltages are buffer amplified at IC1A and IC1B and are then applied to the wave detector circuit consisting of IC2 ~ IC3.

After passing through the detector circuit, the output power is applied to the tuner circuit.

Detector circuit block diagram

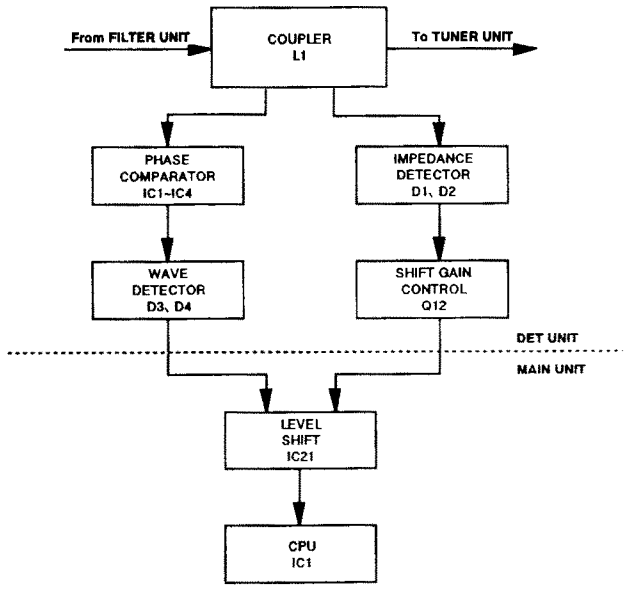

4-1-6 MATCHING CIRCUIT (TUNER UNIT)

Variable capacitors C7 and C8 are connected to motors MF1 and MF2 respectively. Additional capacitors (C1 ~ C4) are connected to C7 and C8 in parallel (C1 and C2 are connected to C7; C3 and C4 are connected to C8) when the linear amplifier operates in the 1.8 MHz band. C5 and C6 are connected to C7 and C8 in parallel when the linear amplifier operates in the 3.5 MHz band. A tap of L10 is automatically grounded by the band-designed relays (RL5 ~ RL16). By using two separate motors, the IC-4KL obtains higher overall tuning speed. Then, tuned power is applied to the antenna connector.

4-2 PROTECTION CIRCUITS

4-2-1 GENERAL

The IC-4KL has two protection systems. One system decreases an exciter's (transceiver's) driving power through the ALC line, and the other system bypasses the power amplifier.

- Output power of the linear amplifier decreases when :
  - the SWR is more than 2 : 1.
  - the driving power exceeds 70 W.
  - the output power exceeds 1 kW.
  - the collector current exceeds 23 A.

- The linear amplifier is bypassed when :
  - the power amplifier gain is less than 1 : 3.
  - the power amplifier balance in the PA unit is broken.
  - the heatsink temperature exceeds +90 ℃ (194° F).

4-2-2 SWR CONTROL CIRCUIT

Forward waves and reflected waves are detected at D15, D16 and L22 on the FILTER UNIT. The detected "REF" signal is applied to the drive power control circuit (IC14B) on the MAIN UNIT. When "REF" signal voltage increases, IC14B outputs signals of negative voltages to the exciter to control the drive power.

ManualsPlus.com

4-2-3 DRIVING POWER CONTROL CIRCUIT

A portion of the attenuated input power from the input attenuator circuit is detected at D2 on the SPLITTER UNIT as the input power reference signal. The input power reference signal is applied to the MAIN UNIT via the "DRIV" line. The signal on the "DRIV" line is applied to the drive power control circuit (IC14B). When the drive power increases, IC14B outputs signals of negative voltage to the exciter to control the drive power.

4-2-4 OUTPUT POWER CONTROL CIRCUIT

The "FOR" signal, consisting of forward waves, is detected at D15 on the FILTER UNIT and is applied to the drive power control circuit (IC14A) on the MAIN UNIT. When the voltage of the "FOR" signal increases and exceeds the power set at R51 on the MAIN UNIT, IC14A outputs signals of negative voltage to control the drive power.

4-2-5 COLLECTOR CURRENT CONTROL CIRCUIT

The "HV" line (40 V) passes through the current detector resistor (R11) on the PA UNIT. Voltage from the "HV" line and voltage from R11 are applied to the "IC+" and "IC–" lines of the MAIN UNIT, respectively. Signals from the "IC+" and "IC - " lines of the MAIN UNIT are applied to the current control circuit (IC13A). When the voltage on the "HV" line drops approximately 2.5 V at R11, IC13A outputs signals of negative voltages to the exciter to control the drive power.

4-2-6 POWER AMPLIFIER GAIN PROTECTION CIRCUIT

The forward wave detected at D15 on the FILTER UNIT is applied to the power amplifier gain comparator (IC14C). The attenuated and rectified driving power signal on the SPLITTER UNIT is also applied to IC14C. When the ratio of driving power to output power is more than approximately 3, IC14C outputs signals of negative voltages. The negative voltages turn OFF the bypass/amplifier relay (RL1, RL15) on the SPLITTER UNIT and FILTER UNIT through Q8 ~ Q13.

4-2-7 POWER AMPLIFIER UNBALANCED PROTECTION CIRCUIT

The power balance is detected at D1 ~ D3 on the COMBINER UNIT. When the power unbalance is broken, the "BAL" line is at a negative voltage level and is applied to D14 on the MAIN UNIT. Then, the "BAL" line turns OFF the bypass/amplifier relays (RL1, RL15) on the SPLITTER UNIT and FILTER UNIT through Q8 ~ Q13.

4-2-8 HEATSINK TEMPERATURE PROTECTION CIRCUIT

Two kinds of thermal sensors; +50 ℃ (+122 ℉) and +90 ℃ (+194 ℉) are installed in the heatsink. If the heatsink temperature rises to +50 ℃ (+122 ℉) or above, the cooling fan is activated. If the temperature rises to +90 ℃ (+194 ℉), the "TH" line becomes "LOW," turning OFF the bypass/amplifier relays (RL1, RL15) on the SPLITTER UNIT through Q9 ~ Q11.

Protection circuit block diagram

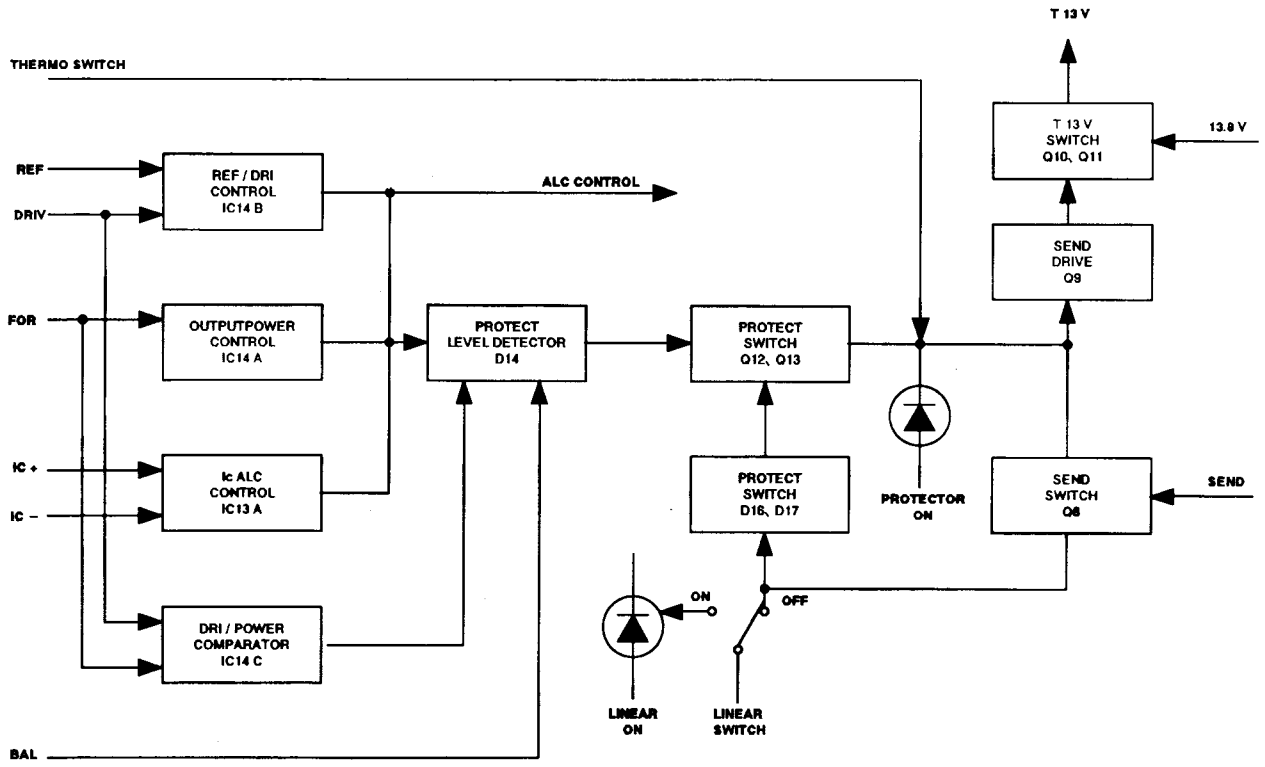

ManualsPlus.com

4-3 POWER SUPPLY CIRCUITS

4-3-1 REGULATOR CIRCUIT (REG UNIT)

The regulator circuit produces 40 V DC. When pushing the [POWER] switch, the RL1 turns ON; after 0.3 sec., RL2 and RL3 turn ON. Then, the AC line is applied to the EP102 (switching regulator circuit) to obtain 40 V DC .

4-3-2 DC-DC CONVERTER (DC-DC UNIT)

The 40 V DC is applied to the DC-DC converter circuit (Q1, Q2) to produce ± 13.8 V DC.

4-3-3 VOLTAGE LINES

HV	40 V DC converted from the AC line at EP102 on the REG UNIT circuits.
13.8 V	13.8 V DC converted from a 40 V DC line at Q1 on the DC-DC UNIT.
– 13.8 V	– 13.8 V DC converted from a 40 V DC line at Q2 on the DC-DC UNIT.
8 V	8 V DC from an exciter through the ACC UNIT.
T13	Transmit 13 V DC converted from a 13.8 V line at Q10 and Q11 on the MAIN UNIT.
5 V	5 V DC converted from a 13.8 V line at IC18 on the MAIN UNIT. This voltage is used for the tuner and SWR module.
– 5 V	– 5 V DC converted from a 13.8 V line at IC19 on the MAIN UNIT.
5 V	5 V DC converted from a 13.8 V line at IC3 on the CONTROL UNIT. This voltage is used for the controller circuit.

4-4 OTHER CIRCUITS

4-4-1 METER CIRCUITS

(1) Po METER
The "FOR" voltage from the FILTER UNIT is applied to the peak power detector (Q7) and is then applied to the "M2" line through the meter switch (IC17).

(2) Ic METER
The "IC+"and "IC-" voltages, generated at the PA UNIT, are applied to the deferential amplifier (IC13A, pins 2, 3). The resulting signal is applied to the "M1" line through the meter switch (IC16).

(3) ALC METER
The "ALC" voltage from the exciter is applied to IC13B (pin 6) and the resulting signal is applied to the "M2" line through the meter switch (IC17).

(4) TEMP METER
The "TEMP" voltage from the PA UNIT is applied to the "M2" line through the meter switch (IC17).

(5) Vc METER
The "+IC" voltage from the PA UNIT is applied to the "M1" line through the meter switch (IC16).

(6) SWR METER
The "FOR" and "REF" voltages, generated at the FILTER UNIT, are applied to the SWR module. The resulting signal is applied to the "M1" line through the meter switch (IC16).

4-4-2 CPU PORT ALLOCATIONS

INPUT PORT

PORT NAME	PIN NUMBER	DESCRIPTION
ϕ PV	16	Input port for the detection of C7's position.
RPV	17	Input port for the detection of C8's position.
ϕ	18	Input port for the reactance detection voltage. This voltage becomes Vref/2 when an antenna is matched.
R	19	Input port the for the resistance voltage. This voltage becomes Vref/2 when an antenna is matched.
Vref	20	Inputs reference voltage for an internal converter.
SET	23	Input port for the SET mode signal.
WR	24	Input port for the WRITE signal.
PWRS	26	Detects the power.When the signal is "LOW," the CPU is backed up.
B1~B3	29~27	These are input ports for the 3-bit band signal.
SEND	30	Inputs transmit/receive switching signals. This port becomes "LOW" while transmitting.
SWR	31	Detects an SWR signal.When the SWR exceeds 3, this port becomes "HIGH."
TUNR	32	Detects a tuner switch signal. The signal becomes "HIGH" when the [TUNER] switch is turned ON.
RESET	34	Inputs a reset signal. This port becomes "HIGH" while transmitting or when the operating band is changed.

OUTPUT PORT

PORT NAME	PIN NUMBER	DESCRIPTION
WAIT	6	Outputs a control signal for the [WAIT] indicator. This port becomes "HIGH" while tuning. This port becomes "HIGH" and "LOW" alternately when the antenna tuner cannot utilize the re-try function for tuning.
b, c, d	8 ~ 10	These are output ports for the 3-bit band signal of the antenna tuner.
ϕ C1, ϕ C2	12, 11	Output a control signal for MF2.
RC1, RC2	14, 13	Output a control signal for MF1.
WAKE	25	Outputs a control signal for the reset circuit. This port is "HIGH" while the CPU clock is being oscillated.
TUN	39	Outputs a tuner switch signal. The signal is "HIGH" when the TUNER port is "HIGH."

ManualsPlus.com

SECTION 5 ADJUSTMENT PROCEDURES

5-1 PREPARATION BEFORE SERVICING

■ REQUIRED TEST EQUIPMENT

EQUIPMENT	GRADE AND RANGE	EQUIPMENT	GRADE AND RANGE
Exciter (Transceiver)	Frequency range : 1.8 ~ 30 MHz Output power : 50 ~ 100 W Mode : RTTY or FM	Ammeter	Capability : 100 mA ~ 100 A
		SWR meter	Frequency range : 1.8 ~ 30 MHz
RF power meter (Terminated type)	Measuring range : 10 ~ 1500 W Frequency range : 1.8 ~ 30 MHz Impedance : 50 Ω SWR : Less than 1.2 : 1	RF dummy load	Impedance : 16.7 , 50 and 150 Ω Capability : 1500 W or more
		Digital DC voltmeter	Input impedance : 10 M Ω / V DC or better
		DC voltmeter	Input impedance : 50 k Ω / V DC or better

■ CONNECTION

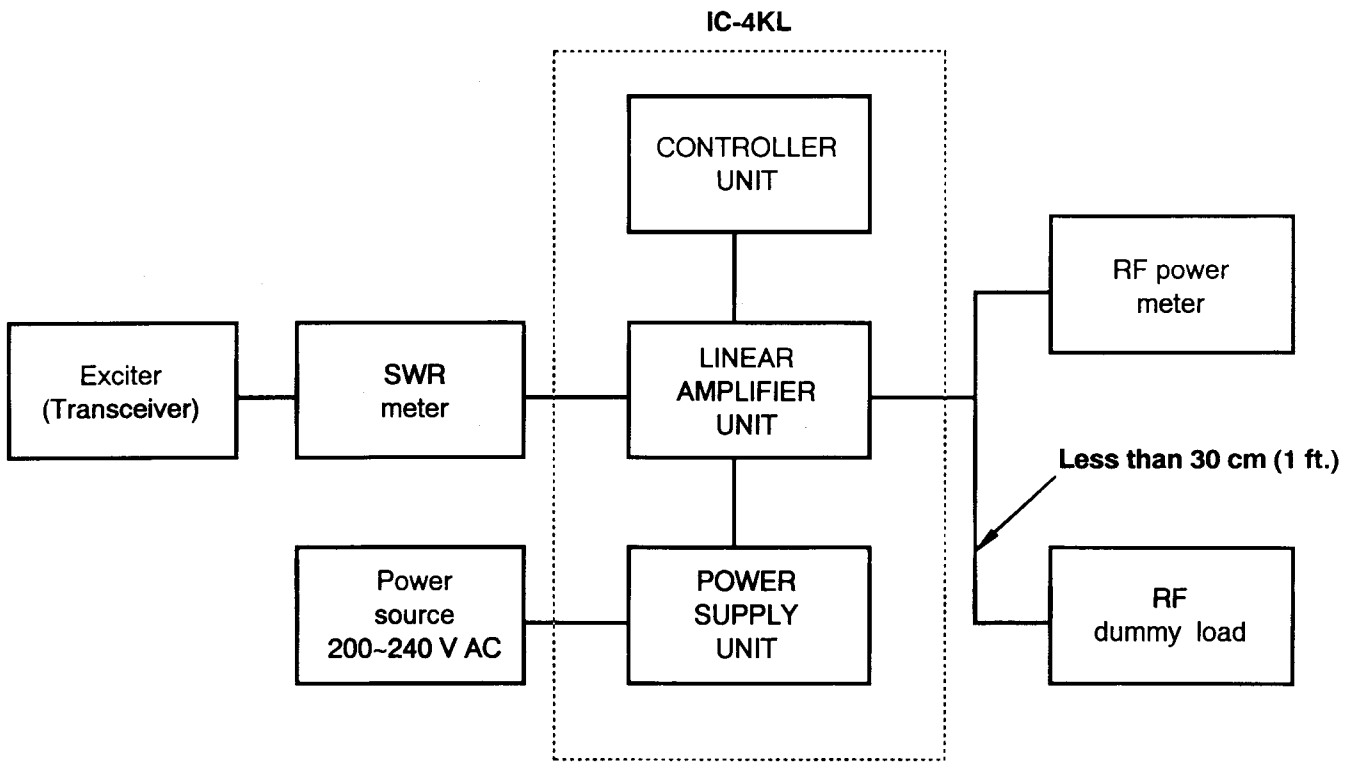

ManualsPlus.com

5-2 ADJUSTMENT PROCEDURES - 1

ADJUSTMENT		ADJUSTMENT CONDITIONS	MEASUREMENT		VALUE	ADJUSTMENT POINT	
			UNIT	LOCATION		UNIT	ADJUST
IDLING CURRENT	1	• [POWER] switch : OFF	EF TERMINAL	Remove W101 and connect the ammeter (3 A range) at that line. See page 5-3.	Measure this current. This is the total amount of idling current in PA 2, PA 3 and PA 4.		Verify
	2	• Exciter frequency : 14.1000 MHz • Mode : USB • [POWER] switch : ON • [AMPLIFIER] switch : ON • DO NOT apply any audio signals to the microphone connector. • Connect the center tap of R9 (PA1) to the ground. • Transmitting					
	3	• Remove the center tap of R9 (PA1) from the ground.			The current measured above in mA plus 200 mA.	PA1	R9
	4	Adjust the idling current of PA2, PA3 and PA4.					
		After adjustment, set as follows: • Receiving • [POWER] switch : OFF • Reconnect W101.					

IC-4KL has 4 PA units. The PA 1 and PA 2 units can be adjusted at the top of the LINEAR AMPLIFIER UNIT. The others, PA 3 and PA 4, can be adjusted after removing the shield plate attached to the bottom of the LINEAR AMPLIFIER UNIT.

Adjusting the PA UNITS.

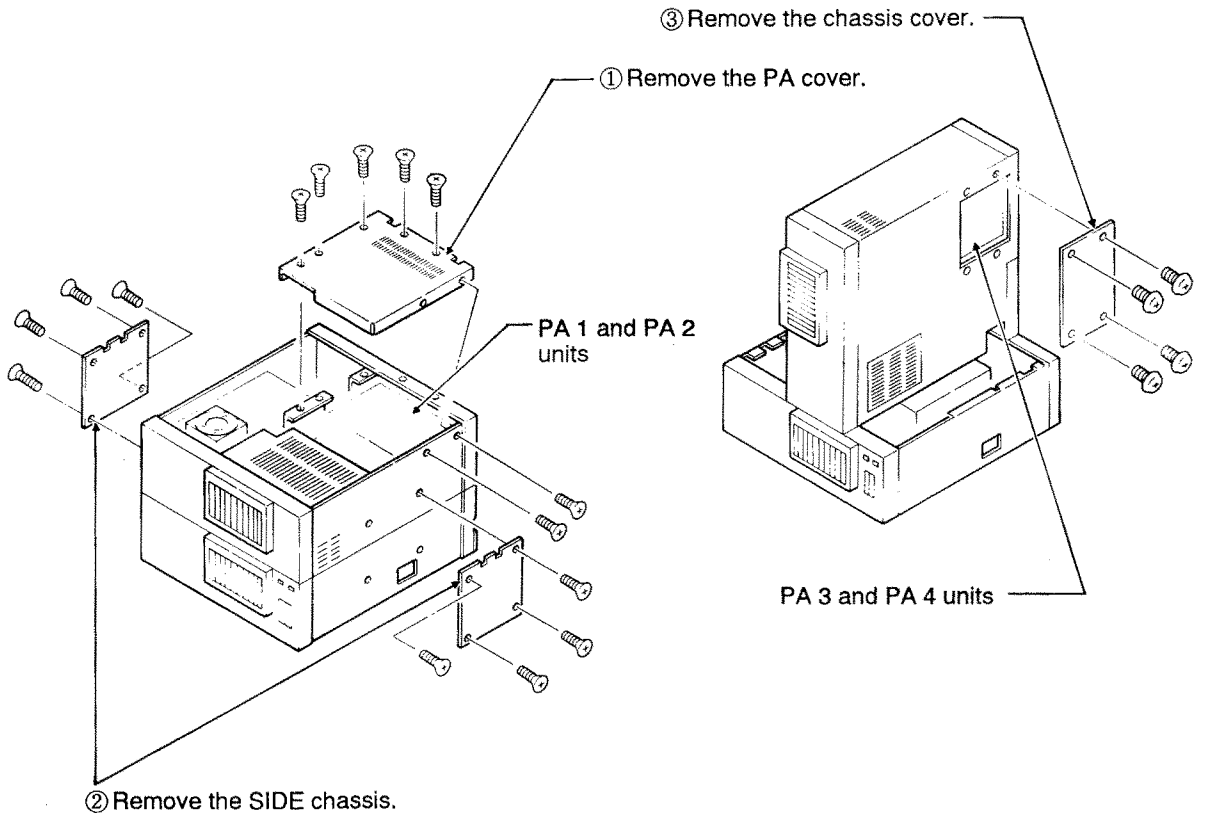

ManualsPlus.com

■ PA 1 AND PA 2 UNITS

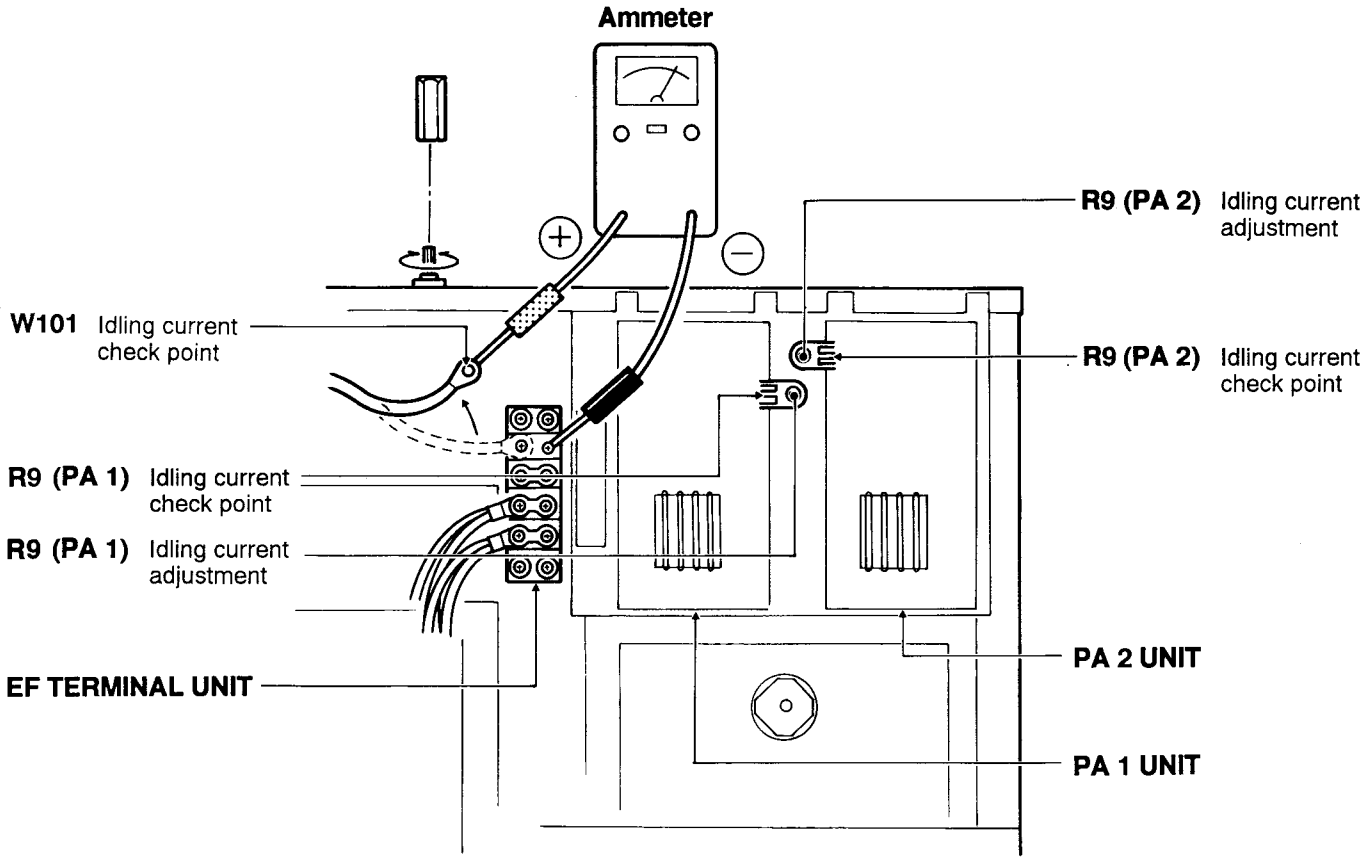

ManualsPlus.com

ADJUSTMENT PROCEDURES - 2

ADJUSTMENT		ADJUSTMENT CONDITIONS	MEASUREMENT		VALUE	ADJUSTMENT POINT	
			UNIT	LOCATION		UNIT	ADJUST
PRESETTING		Before making the following adjustments, preset the volume control and switches as follows: LINEAR AMPLIFIER UNIT On the MAIN UNIT R15, R85, R130 : Max. CCW R50, R51 : Max. CW — 45 degrees S1 : Side A On the REAR PANEL [ALC ADJ] control : Max. CCW R68 : Max. CW POWER SUPPLY UNIT On the FRONT PANEL [CIRCUIT BREAKER] switch : ON REMOTE CONTROLLER UNIT On the FRONT PANEL [POWER] switch : OFF [TUNER] switch : OFF [AMPLIFIER] switch : OFF On the REAR PANEL [PRO TEMP] switch : PRO					
VC METER	1	• [POWER] switch : ON • [Vc] switch : ON • Connect the DC voltmeter to CP1. • Receiving	METER 1	[Vc] scale	Same voltage as the DC voltmeter.	MAIN	R75
PROTECTOR	1	• Exciter frequency : 1.9000 MHz • Mode : RTTY • Exciter RF output power : 100 W • [TEMP/PRO] switch : ON • [AMPLIFIER] switch : OFF • Transmitting	REAR PANEL	Connect the RF power meter to the [ANT] connector.	100 W		Verify
	2	• [AMPLIFIER] switch : ON	METER 2	[PRO] scale	Set as below:	REAR PANEL	[ALC ADJ] control (Turn CW slowly.)
	3				Until the protector function is activated: • The [PROTECT] LED will be ON. • The [TRANSMIT] LED will be OFF.	MAIN	R85 (Turn CW slowly.)
	4	• Receiving • [AMPLIFIER] switch : Turn OFF then ON again.	FRONT PANEL	[PROTECT] LED	[PROTECT] LED remains ON.		Verify

ManualsPlus.com

■ MAIN UNIT AND EF TERMINAL

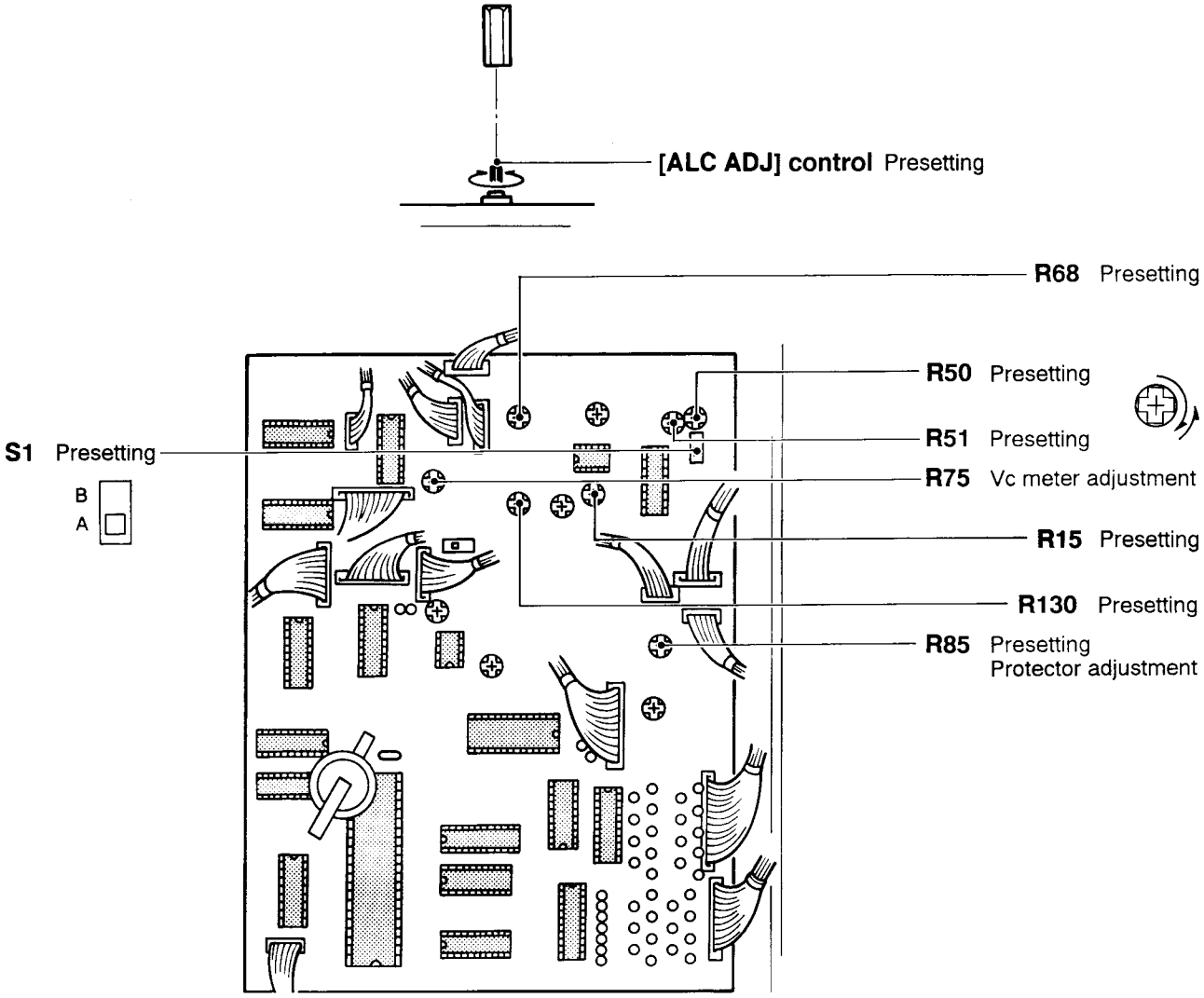

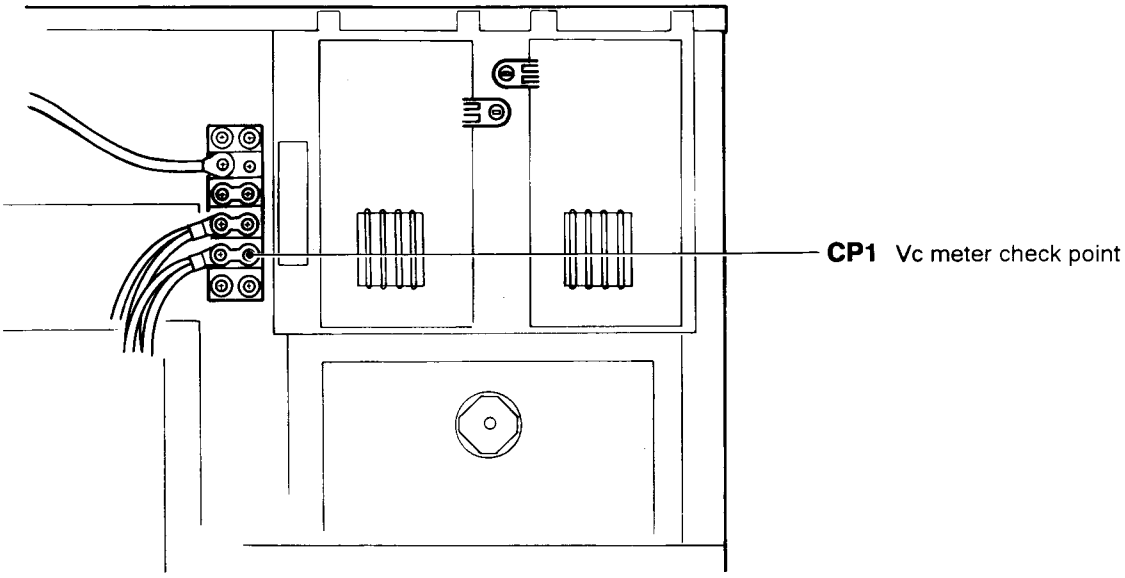

ManualsPlus.com

ADJUSTMENT PROCEDURES - 3

ADJUSTMENT		ADJUSTMENT CONDITIONS	MEASUREMENT		VALUE	ADJUSTMENT POINT	
			UNIT	LOCATION		UNIT	ADJUST
PROTECTOR	5	• [ALC ADJ] control : Max. CCW • Transmitting	METER 2	[PRO] scale	The protector function is activated when the meter needle reaches the following position.	REAR PANEL	[ALC ADJ] control (Turn CW slowly)
	After adjustment, set as follows: • Receiving • [AMPLIFIER] switch : OFF • [ALC ADJ] control : Max. CCW						
VSWR	1	• Exciter frequency : 14.1000 MHz • Mode : RTTY • [AMPLIFIER] switch : ON • Transmitting	MAIN	Connect the DC voltmeter to J4, pin 3.	0 V	FILTER	C73
	After adjustment, set as follows: • Receiving						
OUTPUT POWER	1	• Exciter frequency : 1.9000 MHz • Mode : RTTY • [TEMP/PRO] switch : ON • S1 : Side A • Connect the RF power meter to the [ANT] connector. • Transmitting	METER 2	[PRO] scale	Set as below:	REAR PANEL	[ALC ADJ] control (Turn CW slowly)
	2		REAR PANEL	RF power meter	1000 W	MAIN	R51
	Adjust 1~2 several times for precision.						
	3	• [ALC ADJ] control : Max. CCW • S1 : Side B	METER 2	[PRO] scale	Set as below:	REAR PANEL	[ALC ADJ] control (Turn CW slowly)
	4		REAR PANEL	RF power meter	500 W	MAIN	R50
	Adjust 3~4 several times.						
	After adjustment, set as follows: • Receiving • [ALC ADJ] control : Max. CCW						

ManualsPlus.com

■ MAIN AND FILTER UNITS

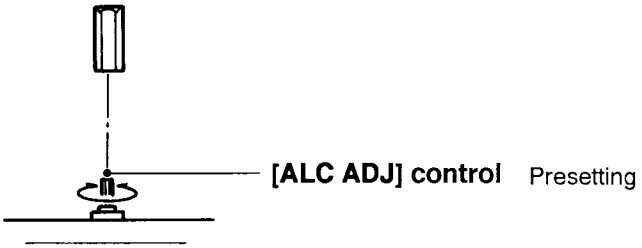

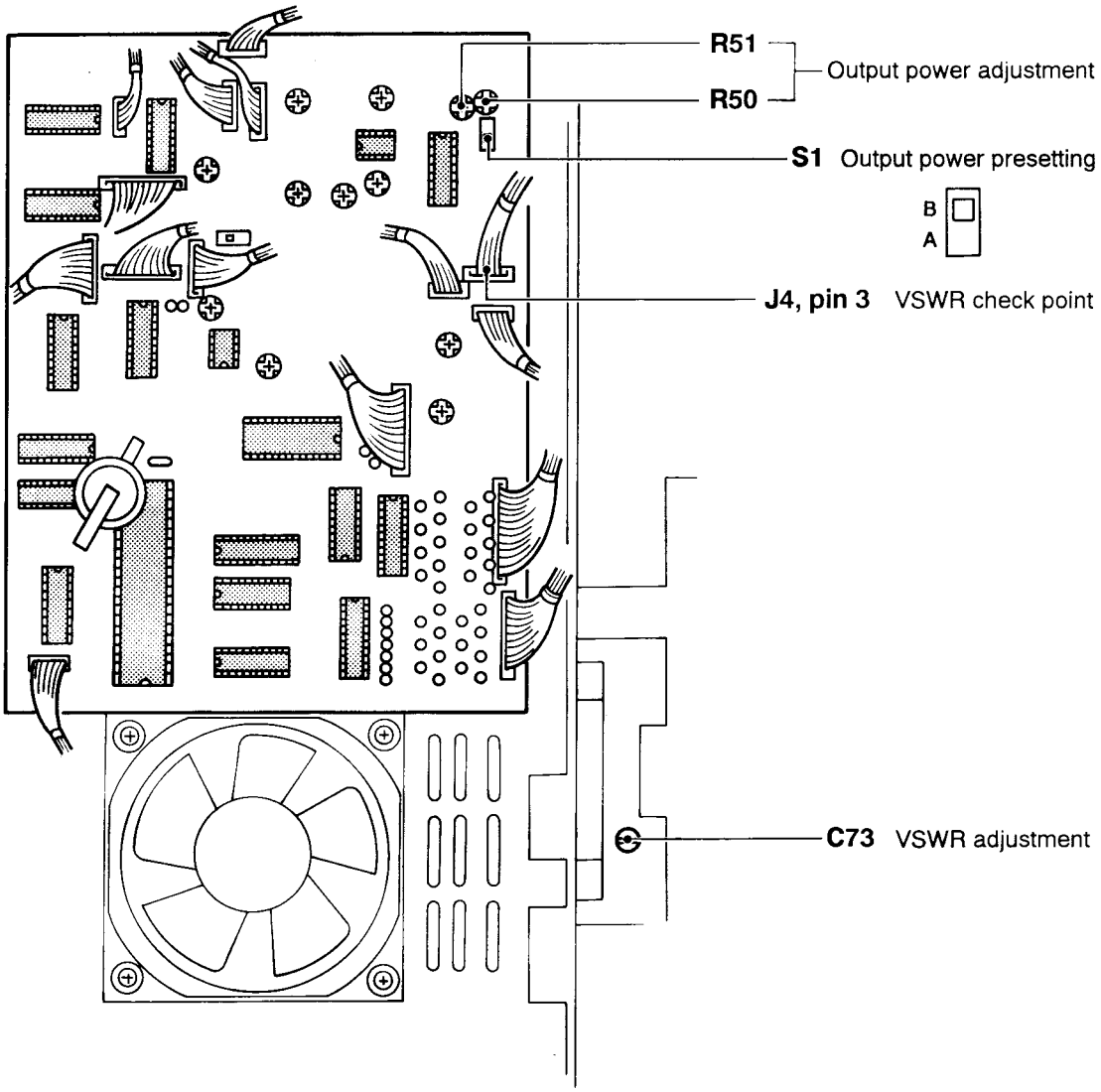

ManualsPlus.com

ADJUSTMENT PROCEDURES - 4

ADJUSTMENT		ADJUSTMENT CONDITIONS	MEASUREMENT		VALUE	ADJUSTMENT POINT	
			UNIT	LOCATION		UNIT	ADJUST
Po METER	1	• [TEMP/PRO] switch : ON • S1 : Side A • Connect the RF power meter to the [ANT] connector. • Transmitting	METER 2	[PRO] scale	Set as below.	REAR PANEL	[ALC ADJ] control (Turn CW slowly)
	2	• [Po] switch : ON		[Po] scale	Same power as the power meter.	MAIN	R43
	After adjustment, set as follows: • Receiving						
Ic METER	1	• [POWER] switch : OFF • Remove W101 and connect the ammeter (100 A range) to the line of W101. See page 5–9.					
	2	• [POWER] switch : ON • [Ic] switch : ON • Receiving	METER 1	[Ic] scale	0 A	MAIN	R68
	3	• Transmitting			Same current as the ammeter.		R69
	Adjust 1~2 several times for precision.						
	After adjustment, set as follows: • Receiving • [POWER] switch : OFF • Reconnect W101.						
Ic ALC METER	1	• Connect the load to CP2. • S1 : Side B • [POWER] switch : ON • [Ic] switch : ON • Transmitting	METER 1	[Ic] scale	34 A	MAIN	R15
	2	• S1 : Side A			50 A		R130
	After adjustment, set as follows: • Receiving						

ManualsPlus.com

■ MAIN UNIT AND EF TERMINAL

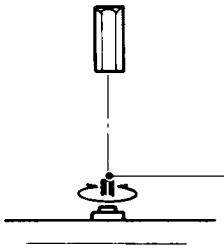

[ALC ADJ] control Po meter adjustment

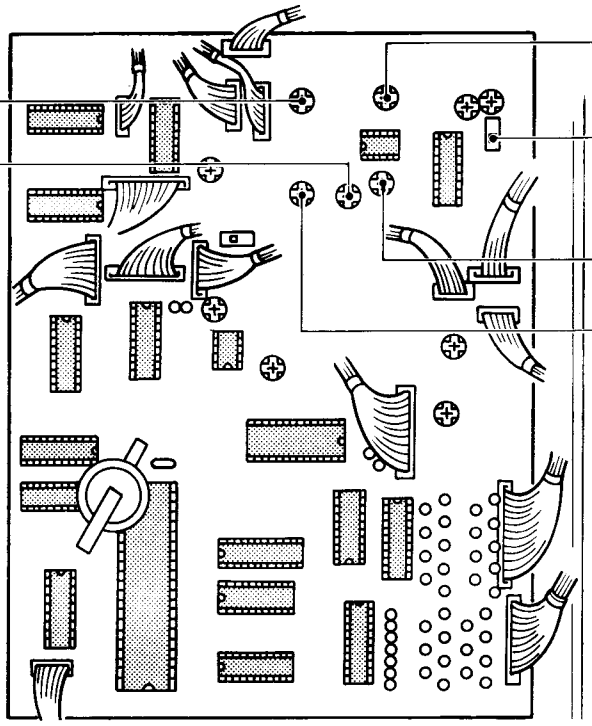

R43 Po meter adjustment

Ic meter adjustment — **R68**, **R69**

S1 Ic ALC meter presetting

B
A

R15, **R130** — Ic ALC meter adjustment

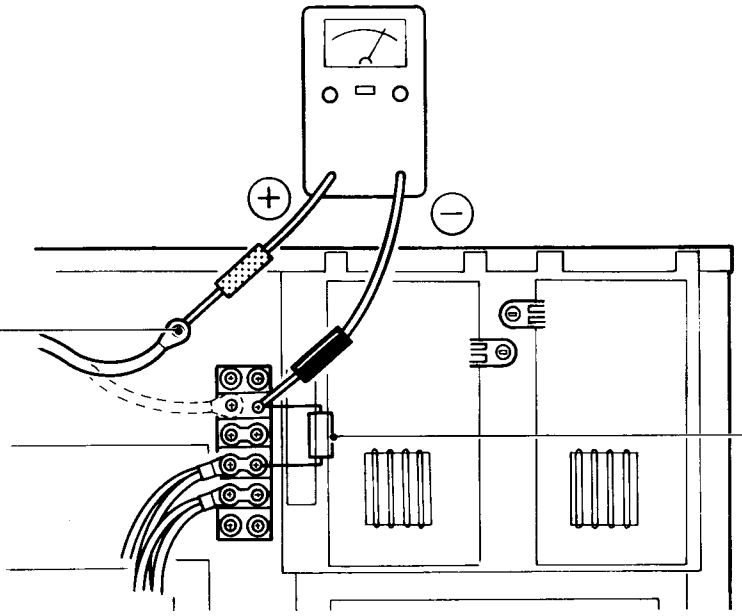

W101 Ic meter presetting

CP2 Ic ALC meter adjustment (Load 40V, 10A)

ManualsPlus.com

ADJUSTMENT PROCEDURES - 5

ADJUSTMENT		ADJUSTMENT CONDITIONS	MEASUREMENT		VALUE	ADJUSTMENT POINT	
			UNIT	LOCATION		UNIT	ADJUST
SWR METER	1	• Exciter frequency : 14.1000 MHz • Mode : RTTY • [SWR] switch : ON • S1 : Side A • Connect the 16.7 or 150 Ω dummy load to the [ANT] connector. • Transmitting	METER 1	[SWR] scale	SWR 3 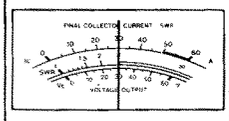	MAIN	R98
	After adjustment, set as follows: • Receiving						
TUNER	1	• [POWER] switch : OFF • Remove 10 screws from the shield cover. • Disconnect W27 and connect the 50 Ω dummy load . See page 5–11.					
	2	• Exciter frequency : 7.1000 MHz • Mode : LSB • [POWER] switch : ON • DO NOT apply any audio signals to the microphone connector. • Transmitting	MAIN	Connect the digital DC voltmeter to IC1, pin 20. (Vref)	4.6~5 V	MAIN	Verify
	3			Connect the digital DC voltmeter to IC21, pin 1. (Oo)	One-half of the value of IC1, pin 20. (Oo = Vref / 2)		R19
	4			Connect the digital DC voltmeter to IC21, pin 7. (Ro)	One-half of the value of IC1, pin 20. (Ro = Vref / 2)		R25
	After adjustment, set as follows: • Receiving						
	5	• Mode : RTTY • Exciter RF output power : 100 W • Transmitting	MAIN	Connect the digital DC voltmeter to IC21, pins 1 and 7.	One-half of the value of IC1, pin 20. (Oo = Ro = Vref / 2)	DET	C6
	After adjustment, set as follows: • Receiving • Remove the 50 Ω dummy load and reconnect W27.						

After all adjustments, attach the shield cover and set as follows:
• [ALC ADJ] control : Max. CCW
• Attach the shaft cover for the [ALC ADJ] control.

ManualsPlus.com

■ MAIN AND DET UNITS

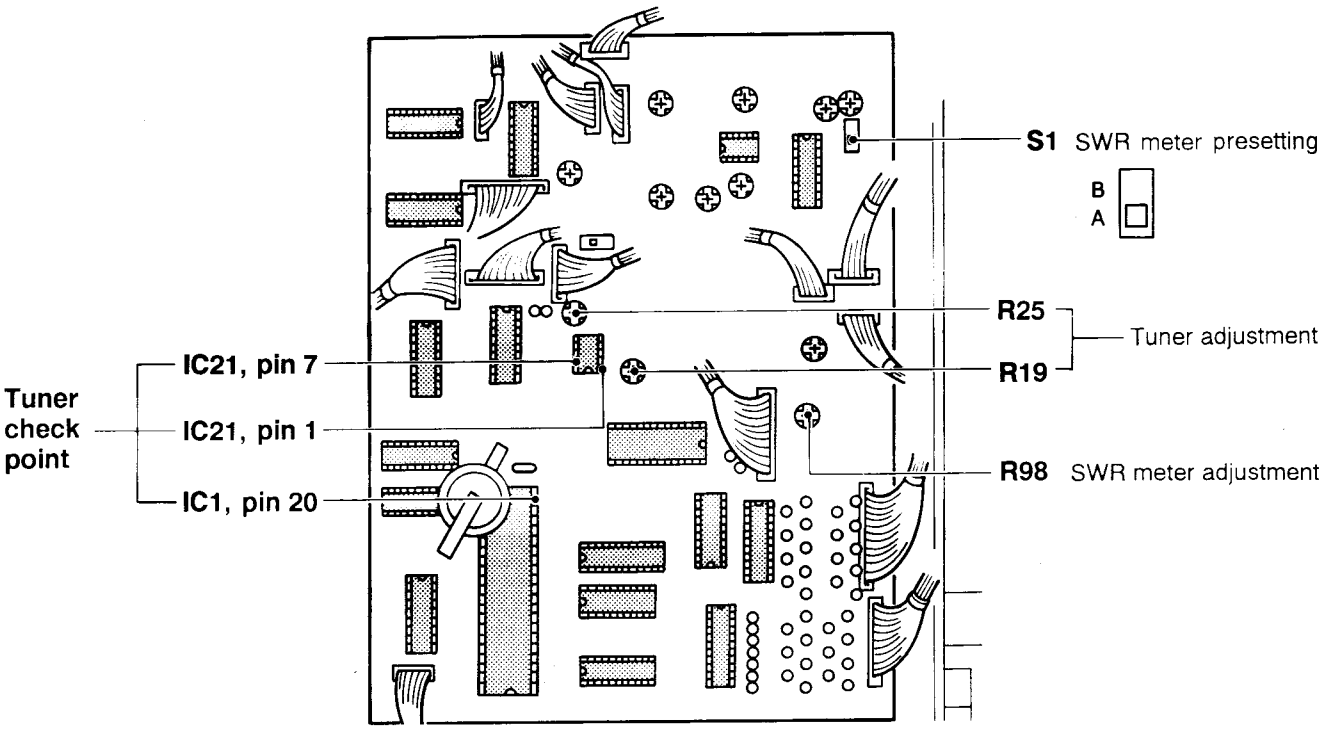

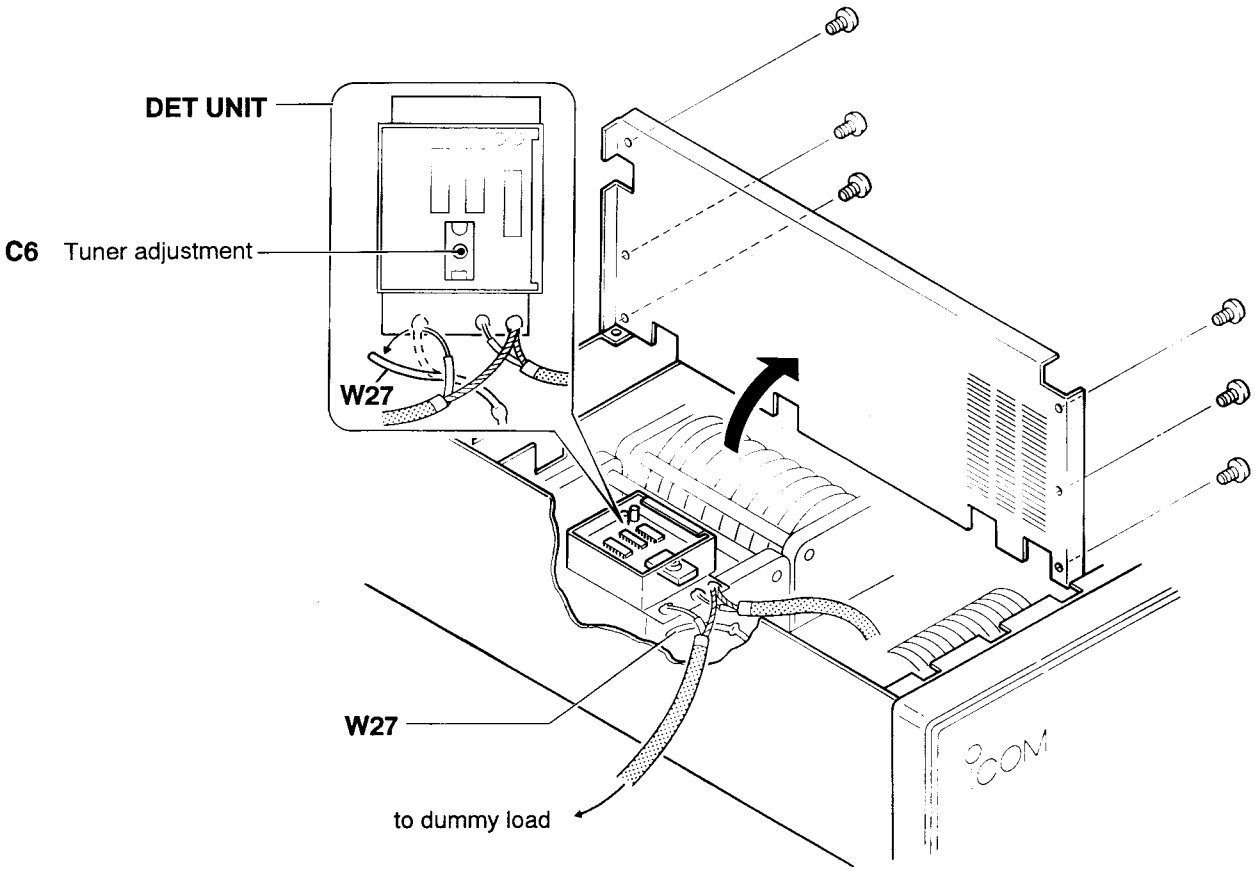

ManualsPlus.com

SECTION 6 PARTS LIST

[EF UNIT]

REF. NO.	ORDER NO.	DESCRIPTION	
C1	4010000520	Ceramic	DD108 B 472K 50V
MF1	2710000260	Motor	CF24DC420-908A
MF2	2710000250	Motor	ASF80171-A
EP2	6510008350	Lead Frame	ML-1750A 4P
EP3	6510000500	Lead Frame	L-3552-1L3P R
EP4	6510009170	Lead Frame	D-13

[MAIN UNIT]

REF. NO.	ORDER NO.	DESCRIPTION	
IC1	1140000980	IC	μPD7533C-077
IC2	1110000300	IC	M51901P
IC3	1130000630	IC	μPD4012BC
IC4	1130000630	IC	μPD4012BC
IC5	1130000620	IC	μPD4011BC
IC6	1130001100	IC	μPD4063BC
IC7	1130000670	IC	μPD4071BC
IC8	1120000970	IC	M54562P
IC9	1120000970	IC	M54562P
IC10	1120000970	IC	M54562P
IC11	1130004410	IC	TC74HC174AP
IC12	1130004410	IC	TC74HC174AP
IC13	1110000540	IC	NJM4558D
IC14	1110001870	IC	NJM2902N
IC15	1110001870	IC	NJM2902N
IC16	1130000120	IC	TC4066BP
IC17	1130000120	IC	TC4066BP
IC18	1180000270	IC	NJM78M05A
IC19	1180000560	IC	NJM79M05A
IC20	1110001791	IC	TA7279P
IC21	1110000540	IC	NJM4558D
IC22	1110000540	IC	NJM4558D
Q1	1510000050	Transistor	2SA1015-Y
Q2	1530000440	Transistor	2SC945 P
Q3	1530000110	Transistor	2SC2458-GR
Q4	1590000350	Transistor	RN1204
Q5	1510000050	Transistor	2SA1015-Y
Q6	1590000340	Transistor	RN1202
Q7	1530000440	Transistor	2SC945 P
Q8	1530000440	Transistor	2SC945 P
Q9	1530000440	Transistor	2SC945 P
Q10	1510000050	Transistor	2SA1015-Y
Q11	1520000320	Transistor	2SB834-Y
Q12	1530000440	Transistor	2SC945 P
Q13	1510000050	Transistor	2SA1015-Y
Q14	1590000350	Transistor	RN1204
Q15	1530000440	Transistor	2SC945 P
Q16	1530000440	Transistor	2SC945 P
Q17	1590000340	Transistor	RN1202
Q19	1590000370	Transistor	RN2204
Q20	1530000180	Transistor	2SC2878-B
D1	1710000030	Diode	1S1555
D2	1710000030	Diode	1S1555
D3	1710000030	Diode	1S1555
D4	1710000030	Diode	1S1555
D5	1710000030	Diode	1S1555
D6	1710000030	Diode	1S1555
D7	1710000030	Diode	1S1555
D8	1710000030	Diode	1S1555
D9	1710000030	Diode	1S1555

[MAIN UNIT]

REF. NO.	ORDER NO.	DESCRIPTION	
D10	1710000030	Diode	1S1555
D11	1710000030	Diode	1S1555
D12	1710000030	Diode	1S1555
D13	1710000030	Diode	1S1555
D14	1730000230	Zener	RD11E B1
D15	1710000030	Diode	1S1555
D16	1710000030	Diode	1S1555
D17	1710000030	Diode	1S1555
D18	1710000030	Diode	1S1555
D19	1710000030	Diode	1S1555
D20	1710000030	Diode	1S1555
D21	1710000030	Diode	1S1555
D22	1710000030	Diode	1S1555
D23	1790000240	Diode	1SS99
D24	1710000030	Diode	1S1555
D25	1710000030	Diode	1S1555
D26	1710000030	Diode	1S1555
D27	1710000030	Diode	1S1555
D28	1710000030	Diode	1S1555
D29	1730000160	Zener	RD7.5E B2
D30	1730000280	Zener	RD24E B2
D31	1730000280	Zener	RD24E B2
D32	1710000030	Diode	1S1555
D33	1730000160	Zener	RD7.5E B2
D34	1730000100	Zener	RD5.1E B2
D35	1710000030	Diode	1S1555
D36	1730000250	Zener	RD12E B2
D37	1710000050	Diode	1SS53
D38	1710000050	Diode	1SS53
D39	1710000050	Diode	1SS53
D40	1730000190	Zener	RD8.2E B3
D41	1710000350	Diode	1N4002
D42	1710000350	Diode	1N4002
D43	1710000350	Diode	1N4002
D44	1710000350	Diode	1N4002
D45	1710000350	Diode	1N4002
D46	1710000350	Diode	1N4002
D47	1710000350	Diode	1N4002
D48	1710000050	Diode	1SS53
X1	6060000160	Ceramic resonator	CSB500E
L1	6180000990	Coil	LAL 04NA 101K
L3	6180000990	Coil	LAL 04NA 101K
L4	6180000990	Coil	LAL 04NA 101K
L5	6180000990	Coil	LAL 04NA 101K
L6	6180000990	Coil	LAL 04NA 101K
L7	6180000990	Coil	LAL 04NA 101K
L8	6180000990	Coil	LAL 04NA 101K
L9	6180000990	Coil	LAL 04NA 101K
L10	6180000990	Coil	LAL 04NA 101K
L11	6180000990	Coil	LAL 04NA 101K
L12	6180000990	Coil	LAL 04NA 101K
L13	6180000990	Coil	LAL 04NA 101K
L14	6180000990	Coil	LAL 04NA 101K
L15	6180000990	Coil	LAL 04NA 101K
L16	6180000990	Coil	LAL 04NA 101K
L17	6180000990	Coil	LAL 04NA 101K
L18	6180000990	Coil	LAL 04NA 101K
L19	6910000670	Coil	BT01RN1-A61-001
L20	6910000670	Coil	BT01RN1-A61-001
L21	6910000670	Coil	BT01RN1-A61-001
L22	6910000670	Coil	BT01RN1-A61-001
L23	6910000670	Coil	BT01RN1-A61-001
L24	6910000670	Coil	BT01RN1-A61-001
L25	6910000670	Coil	BT01RN1-A61-001
L26	6910000670	Coil	BT01RN1-A61-001
L27	6910000670	Coil	BT01RN1-A61-001
L28	6910000670	Coil	BT01RN1-A61-001

ManualsPlus.com

[MAIN UNIT]

REF. NO.	ORDER NO.	DESCRIPTION	
L30	6180000900	Coil	LAL 03NA 101K
L31	6180000900	Coil	LAL 03NA 101K
L32	6180001220	Coil	LAL 04NA 100K
L33	6180001220	Coil	LAL 04NA 100K
L35	6180000900	Coil	LAL 03NA 101K
L38	6180000990	Coil	LAL 04NA 101K
L39	6180000990	Coil	LAL 04NA 101K
L40	6180000990	Coil	LAL 04NA 101K
L41	6910000670	Coil	BT01RN1-A61-001
L42	6910000670	Coil	BT01RN1-A61-001
L43	6910000670	Coil	BT01RN1-A61-001
L44	6910000670	Coil	BT01RN1-A61-001
L45	6910000670	Coil	BT01RN1-A61-001
L46	6910000670	Coil	BT01RN1-A61-001
L48	6180000990	Coil	LAL 04NA 101K
L49	6180000990	Coil	LAL 04NA 101K
L50	6180000990	Coil	LAL 04NA 101K
L51	6180000990	Coil	LAL 04NA 101K
L52	6180000990	Coil	LAL 04NA 101K
L53	6180000990	Coil	LAL 04NA 101K
L54	6180000990	Coil	LAL 04NA 101K
L55	6180000990	Coil	LAL 04NA 101K
L56	6180000990	Coil	LAL 04NA 101K
L57	6180000990	Coil	LAL 04NA 101K
L58	6180000990	Coil	LAL 04NA 101K
L59	6180000990	Coil	LAL 04NA 101K
L60	6180000990	Coil	LAL 04NA 101K
L61	6180000990	Coil	LAL 04NA 101K
L62	6180000990	Coil	LAL 04NA 101K
L63	6180000990	Coil	LAL 04NA 101K
L64	6180000990	Coil	LAL 04NA 101K
R1	7010004150	Resistor	R20J 470 Ω
R2	7010004610	Resistor	R20J 3.3 M Ω
R3	7010003780	Resistor	ELR20J 1 M Ω
R4	7010004450	Resistor	R20J 100 k Ω
R5	7410000160	Resistor Array	RMX-7 473K
R6	7010004450	Resistor	R20J 100 k Ω
R7	7010003620	Resistor	ELR20J 47 k Ω
R8	7010004450	Resistor	R20J 100 k Ω
R9	7010003760	Resistor	ELR20J 680 k Ω
R10	7010003760	Resistor	ELR20J 680 k Ω
R11	7010003620	Resistor	ELR20J 47 k Ω
R12	7410000160	Resistor Array	RMX-7 473K
R13	7010004450	Resistor	R20J 100 k Ω
R14	7010003660	Resistor	ELR20J 100 k Ω
R15	7310000660	Trimmer	RH0621C14J19A (103)
R16	7080000420	Resistor	CRB25FX 100 k Ω
R17	7080000630	Resistor	CRB25FX 1 M Ω
R18	7080000420	Resistor	CRB25FX 100 k Ω
R19	7310000660	Trimmer	RH0621C14J19A (103)
R20	7010003530	Resistor	ELR20J 10 k Ω
R21	7010004320	Resistor	R20J 10 k Ω
R22	7080000420	Resistor	CRB25FX 100 k Ω
R23	7080000630	Resistor	CRB25FX 1 M Ω
R24	7080000420	Resistor	CRB25FX 100 k Ω
R25	7310000660	Trimmer	RH0621C14J19A (103)
R26	7010004150	Resistor	R20J 470 Ω
R27	7010003580	Resistor	ELR20J 22 k Ω
R28	7010004190	Resistor	R20J 1 k Ω
R29	7010004190	Resistor	R20J 1 k Ω
R30	7010004190	Resistor	R20J 1 k Ω
R31	7010004270	Resistor	R20J 4.7 k Ω
R32	7010004390	Resistor	R20J 33 k Ω
R33	7010004450	Resistor	R20J 100 k Ω
R34	7010004450	Resistor	R20J 100 k Ω
R35	7010003530	Resistor	ELR20J 10 k Ω
R36	7010003630	Resistor	ELR20J 56 k Ω
R37	7010004440	Resistor	R20J 82 k Ω
R38	7010004390	Resistor	R20J 33 k Ω
R39	7010003620	Resistor	ELR20J 47 k Ω
R40	7010003620	Resistor	ELR20J 47 k Ω
R41	7010003620	Resistor	ELR20J 47 k Ω
R42	7010004370	Resistor	R20J 22 k Ω
R43	7310000780	Trimmer	RH0651CS4J25A (473)
R44	7010003580	Resistor	ELR20J 22 k Ω

[MAIN UNIT]

REF. NO.	ORDER NO.	DESCRIPTION	
R45	7010004320	Resistor	R20J 10 k Ω
R46	7010003360	Resistor	ELR20J 470 Ω
R47	7010003740	Resistor	ELR20J 470 k Ω
R48	7010003780	Resistor	ELR20J 1 M Ω
R49	7010003700	Resistor	ELR20J 220 k Ω
R50	7310000790	Trimmer	RH0651C15J1UA (104)
R51	7310000790	Trimmer	RH0651C15J1UA (104)
R52	7010003740	Resistor	ELR20J 470 k Ω
R53	7010003820	Resistor	ELR20J 3.3 M Ω
R54	7010004540	Resistor	R20J 560 k Ω
R55	7010004450	Resistor	R20J 100 k Ω
R56	7010004450	Resistor	R20J 100 k Ω
R57	7010004390	Resistor	R20J 33 k Ω
R58	7010004340	Resistor	R20J 15 k Ω
R59	7010004430	Resistor	R20J 68 k Ω
R60	7010003760	Resistor	ELR20J 680 k Ω
R61	7010004430	Resistor	R20J 68 k Ω
R62	7010001390	Resistor	R25XJ 82 k Ω
R63	7080001120	Resistor	CRB25FX 82 k Ω
R64	7080000630	Resistor	CRB25FX 1 M Ω
R65	7080001120	Resistor	CRB25FX 82 k Ω
R66	7080000830	Resistor	CRB25FX 22.4 k Ω
R67	7080000310	Resistor	CRB25FX 22 k Ω
R68	7310001240	Trimmer	RH0621CS2J1KA (471)
R69	7310000660	Trimmer	RH0621C14J19A (103)
R70	7010003400	Resistor	ELR20J 1 k Ω
R71	7010001380	Resistor	R25XJ 68 k Ω
R72	7010003640	Resistor	ELR20J 68 k Ω
R73	7010004390	Resistor	R20J 33 k Ω
R74	7010001450	Resistor	R25XJ 220 k Ω
R75	7310000800	Trimmer	RH0651CJ5J01A (224)
R76	7010000930	Resistor	R25XJ 15 Ω
R77	7010004340	Resistor	R20J 15 k Ω
R78	7010003550	Resistor	ELR20J 15 k Ω
R79	7010004300	Resistor	R20J 6.8 k Ω
R80	7010003440	Resistor	ELR20J 2.2 k Ω
R81	7010004190	Resistor	R20J 1 k Ω
R82	7010003530	Resistor	ELR20J 10 k Ω
R83	7010004160	Resistor	R20J 560 Ω
R84	7010003530	Resistor	ELR20J 10 k Ω
R85	7310000760	Trimmer	RH0651CJ4J01A (223)
R86	7010003530	Resistor	ELR20J 10 k Ω
R87	7010004190	Resistor	R20J 1 k Ω
R88	7010003400	Resistor	ELR20J 1 k Ω
R89	7010003440	Resistor	ELR20J 2.2 k Ω
R90	7010003530	Resistor	ELR20J 10 k Ω
R91	7010004110	Resistor	R20J 220 Ω
R92	7010004390	Resistor	R20J 33 k Ω
R93	7010004400	Resistor	R20J 39 k Ω
R94	7010004450	Resistor	R20J 100 k Ω
R95	7010003610	Resistor	ELR20J 39 k Ω
R96	7010004370	Resistor	R20J 22 k Ω
R97	7010004410	Resistor	R20J 47 k Ω
R98	7310000730	Trimmer	RH0651CN3J01A (332)
R99	7010004250	Resistor	R20J 3.3 k Ω
R100	7010004450	Resistor	R20J 100 k Ω
R101	7010004450	Resistor	R20J 100 k Ω
R102	7010003660	Resistor	ELR20J 100 k Ω
R103	7010003660	Resistor	ELR20J 100 k Ω
R104	7010004110	Resistor	R20J 220 Ω
R105	7010004450	Resistor	R20J 100 k Ω
R106	7010001190	Resistor	R25XJ 2.2 k Ω
R107	7010003630	Resistor	ELR20J 56 k Ω
R108	7010004440	Resistor	R20J 82 k Ω
R109	7010003600	Resistor	ELR20J 33 k Ω
R110	7010003650	Resistor	ELR20J 82 k Ω
R111	7010004440	Resistor	R20J 82 k Ω
R112	7010004390	Resistor	R20J 33 k Ω
R113	7010005260	Resistor	R25XJ 1.2 M Ω
R114	7010004410	Resistor	R20J 47 k Ω
R115	7010004530	Resistor	R20J 470 k Ω
R116	7010003400	Resistor	ELR20J 1 k Ω
R117	7010003630	Resistor	ELR20J 56 k Ω
R120	7010003620	Resistor	ELR20J 47 k Ω
R121	7010004410	Resistor	R20J 47 k Ω
R122	7010003620	Resistor	ELR20J 47 k Ω
R123	7010004450	Resistor	R20J 100 k Ω

ManualsPlus.com

[MAIN UNIT]

REF. NO.	ORDER NO.	DESCRIPTION	
R124	7010003660	Resistor	ELR20J 100 kΩ
R125	7010003660	Resistor	ELR20J 100 kΩ
R126	7010003580	Resistor	ELR20J 22 kΩ
R127	7010003530	Resistor	ELR20J 10 kΩ
R128	7010003440	Resistor	ELR20J 2.2 kΩ
R129	7010004280	Resistor	R20J 5.6 kΩ
R130	7310000660	Trimmer	RH0621C14J19A (103)
R131	7010004410	Resistor	R20J 47 kΩ
R132	7010004410	Resistor	R20J 47 kΩ
R133	7010003530	Resistor	ELR20J 10 kΩ
C1	4010000520	Ceramic	DD108 B 472K 50V
C2	4010000520	Ceramic	DD108 B 472K 50V
C3	4510002810	Electrolytic	16 SS 47 μF
C4	4040000250	Barrier Layer	UAT 08X 473M
C5	4010000520	Ceramic	DD108 B 472K 50V
C6	4010000380	Ceramic	DD107 SL 221J 50V
C7	4010000380	Ceramic	DD107 SL 221J 50V
C8	4010000520	Ceramic	DD108 B 472K 50V
C9	4040000260	Barrier Layer	UZE 08X 104M
C10	4040000260	Barrier Layer	UZE 08X 104M
C11	4510002810	Electrolytic	16 SS 47 μF
C12	4510002810	Electrolytic	16 SS 47 μF
C13	4510002810	Electrolytic	16 SS 47 μF
C14	4010000520	Ceramic	DD108 B 472K 50V
C15	4510003040	Electrolytic	16 SS 100 μF
C16	4010000460	Ceramic	DD104 B 471K 50V
C17	4010000510	Ceramic	DD106 B 222K 50V
C18	4010000520	Ceramic	DD108 B 472K 50V
C19	4010000460	Ceramic	DD104 B 471K 50V
C20	4010000510	Ceramic	DD106 B 222K 50V
C21	4010000520	Ceramic	DD108 B 472K 50V
C22	4510002780	Electrolytic	16 SS 10 μF
C23	4010000520	Ceramic	DD108 B 472K 50V
C24	4040000250	Barrier Layer	UAT 08X 473M
C25	4010000500	Ceramic	DD104 B 102K 50V
C26	4010000520	Ceramic	DD108 B 472K 50V
C27	4010000520	Ceramic	DD108 B 472K 50V
C28	4010000520	Ceramic	DD108 B 472K 50V
C29	4010000520	Ceramic	DD108 B 472K 50V
C30	4010000520	Ceramic	DD108 B 472K 50V
C31	4010000520	Ceramic	DD108 B 472K 50V
C32	4510002940	Electrolytic	50 SS 1 μF
C33	4010000520	Ceramic	DD108 B 472K 50V
C34	4010000520	Ceramic	DD108 B 472K 50V
C35	4010000520	Ceramic	DD108 B 472K 50V
C36	4010000330	Ceramic	DD105 SL 101J 50V
C37	4010000520	Ceramic	DD108 B 472K 50V
C38	4010000520	Ceramic	DD108 B 472K 50V
C39	4010000520	Ceramic	DD108 B 472K 50V
C40	4010000420	Ceramic	DD108 SL 391J 50V
C41	4010000510	Ceramic	DD106 B 222K 50V
C42	4510002780	Electrolytic	16 SS 10 μF
C43	4040000250	Barrier Layer	UAT 08X 473M
C44	4040000250	Barrier Layer	UAT 08X 473M
C45	4010000520	Ceramic	DD108 B 472K 50V
C46	4510002830	Electrolytic	25 SS 4R7 μF
C47	4040000250	Barrier Layer	UAT 08X 473M
C48	4010000520	Ceramic	DD108 B 472K 50V
C49	4010000520	Ceramic	DD108 B 472K 50V
C50	4510002780	Electrolytic	16 SS 10 μF
C51	4510002780	Electrolytic	16 SS 10 μF
C52	4010000520	Ceramic	DD108 B 472K 50V
C53	4040000250	Barrier Layer	UAT 08X 473M
C54	4010000520	Ceramic	DD108 B 472K 50V
C55	4040000250	Barrier Layer	UAT 08X 473M
C56	4010000520	Ceramic	DD108 B 472K 50V
C57	4010000520	Ceramic	DD108 B 472K 50V
C58	4510002780	Electrolytic	16 SS 10 μF
C59	4010000520	Ceramic	DD108 B 472K 50V
C60	4510002780	Electrolytic	16 SS 10 μF
C61	4010000520	Ceramic	DD108 B 472K 50V
C62	4510002780	Electrolytic	16 SS 10 μF
C63	4010000520	Ceramic	DD108 B 472K 50V
C64	4510002780	Electrolytic	16 SS 10 μF
C65	4010000520	Ceramic	DD108 B 472K 50V

[MAIN UNIT]

REF. NO.	ORDER NO.	DESCRIPTION	
C66	4010000520	Ceramic	DD108 B 472K 50V
C67	4530000250	Capacitor Array	B8XC0112-32N
C68	4010000520	Ceramic	DD108 B 472K 50V
C69	4010000520	Ceramic	DD108 B 472K 50V
C70	4530000250	Capacitor Array	B8XC0112-32N
C71	4010000520	Ceramic	DD108 B 472K 50V
C72	4010000520	Ceramic	DD108 B 472K 50V
C73	4010000520	Ceramic	DD108 B 472K 50V
C74	4010000520	Ceramic	DD108 B 472K 50V
C75	4040000250	Barrier Layer	UAT 08X 473M
C76	4010000460	Ceramic	DD104 B 471K 50V
C77	4010000460	Ceramic	DD104 B 471K 50V
C78	4010000520	Ceramic	DD108 B 472K 50V
C79	4010000520	Ceramic	DD108 B 472K 50V
C80	4010000520	Ceramic	DD108 B 472K 50V
C81	4010000520	Ceramic	DD108 B 472K 50V
C82	4010000520	Ceramic	DD108 B 472K 50V
C83	4010000520	Ceramic	DD108 B 472K 50V
C84	4010000520	Ceramic	DD108 B 472K 50V
C85	4530000250	Capacitor Array	B8XC0112-32N
C86	4010000520	Ceramic	DD108 B 472K 50V
C87	4010000520	Ceramic	DD108 B 472K 50V
C88	4010000520	Ceramic	DD108 B 472K 50V
C89	4550000010	Tantalum	DN 1C 4R7M
C90	4530000250	Capacitor Array	B8XC0112-32N
C91	4530000250	Capacitor Array	B8XC0112-32N
C92	4010000520	Ceramic	DD108 B 472K 50V
C93	4530000350	Capacitor Array	B8ZC0111-32N
C94	4010000520	Ceramic	DD108 B 472K 50V
C95	4510001770	Electrolytic	16 RBP 10 μF
C96	4010000520	Ceramic	DD108 B 472K 50V
C97	4010000520	Ceramic	DD108 B 472K 50V
C98	4510001730	Electrolytic	50 RBP 0.47 μF
C100	4010000520	Ceramic	DD108 B 472K 50V
C101	4010000520	Ceramic	DD108 B 472K 50V
S1	2220000360	Switch	ESD-1111212
S2	2220000360	Switch	ESD-1111212
BT1	3020000020	Lithium Battery	BR2032-1T2
EP1	0910021577	P.C. Board	B 1735G (MAIN)

[SWR UNIT]

REF. NO.	ORDER NO.	DESCRIPTION	
IC1	1110000960	IC	NJM4558M(T1)
IC2	1110000960	IC	NJM4558M(T1)
Q1	1560000360	FET	2SK209-Y (TE85R)
Q2	1560000360	FET	2SK209-Y (TE85R)
D1	1750000030	Diode	1SS187(TE85R)
R1	7030000620	Resistor	MCR10EZHJ 100 kΩ (104)
R2	7030000500	Resistor	MCR10EZHJ 10 kΩ (103)
R3	7030000500	Resistor	MCR10EZHJ 10 kΩ (103)
R4	7030000500	Resistor	MCR10EZHJ 10 kΩ (103)
R5	7030000600	Resistor	MCR10EZHJ 68 kΩ (683)
R6	7030000570	Resistor	MCR10EZHJ 39 kΩ (393)
R7	7030000580	Resistor	MCR10EZHJ 47 kΩ (473)
R8	7030000580	Resistor	MCR10EZHJ 47 kΩ (473)
R9	7030000540	Resistor	MCR10EZHJ 22 kΩ (223)
R10	7030000620	Resistor	MCR10EZHJ 100 kΩ (104)
R11	7030000500	Resistor	MCR10EZHJ 10 kΩ (103)
R12	7030000500	Resistor	MCR10EZHJ 10 kΩ (103)
R13	7030000630	Resistor	MCR10EZHJ 120 kΩ (124)

ManualsPlus.com

[SWR UNIT]

REF. NO.	ORDER NO.	DESCRIPTION	
R14	7030000500	Resistor	MCR10EZHJ 10 k Ω (103)
R15	7030000480	Resistor	MCR10EZHJ 6.8 k Ω (682)
R16	7030000500	Resistor	MCR10EZHJ 10 k Ω (103)
R17	7030000570	Resistor	MCR10EZHJ 39 k Ω (393)
R18	7030000740	Resistor	MCR10EZHJ 1 M Ω (105)
R19	7030000570	Resistor	MCR10EZHJ 39 k Ω (393)
C1	4030003360	Ceramic	GRM40 F 473Z 50PT
C2	4030001140	Ceramic	GRM40 F 103Z 50PT
C3	4030003360	Ceramic	GRM40 F 473Z 50PT
C4	4030003360	Ceramic	GRM40 F 473Z 50PT
C5	4030003360	Ceramic	GRM40 F 473Z 50PT
C6	4030001090	Ceramic	GRM40 B 471K 50PT
C7	4030003460	Ceramic	GRM40 B 562K 50PT
EP1	0910014861	P.C. Board	B 1332A (SWR)

[FILTER UNIT]

REF. NO.	ORDER NO.	DESCRIPTION	
D2	1710000350	Diode	1N4002
D4	1710000350	Diode	1N4002
D6	1710000350	Diode	1N4002
D8	1710000350	Diode	1N4002
D10	1710000350	Diode	1N4002
D12	1710000350	Diode	1N4002
D14	1710000350	Diode	1N4002
D15	1710000040	Diode	1S953
D16	1710000040	Diode	1S953
D17	1710000350	Diode	1N4002
L1	6110002270	Coil	LA-404
L2	6110002280	Coil	LA-405
L3	6110002250	Coil	LA-402
L4	6110002260	Coil	LA-403
L5	6140001920	Coil	LR-202
L6	6140001930	Coil	LR-203
L7	6140001900	Coil	LR-200
L8	6140001910	Coil	LR-201
L9	6140001890	Coil	LR-198
L10	6140001940	Coil	LR-199
L11	6140001870	Coil	LR-196
L12	6140001880	Coil	LR-197
L13	6140001850	Coil	LR-194
L14	6140001860	Coil	LR-195
L15	6180001220	Coil	LAL 04NA 100K
L16	6180001220	Coil	LAL 04NA 100K
L17	6180001220	Coil	LAL 04NA 100K
L18	6180000990	Coil	LAL 04NA 101K
L19	6180000990	Coil	LAL 04NA 101K
L20	6180000990	Coil	LAL 04NA 101K
L21	6180000990	Coil	LAL 04NA 101K
L22	6140000100	Coil	LR-22A
L23	6180000900	Coil	LAL 03NA 101K
L24	6180000450	Coil	RFC L6 222K
L25	6110001270	Coil	LA-167
R1	7010004720	Resistor	R50XJ 100 Ω
R2	7010004370	Resistor	R20J 22 k Ω
R3	7010004370	Resistor	R20J 22 k Ω
R4	7010004410	Resistor	R20J 47 k Ω
R5	7010004410	Resistor	R20J 47 k Ω
R7	7010004720	Resistor	R50XJ 100 Ω
R8	7010004720	Resistor	R50XJ 100 Ω
R9	7070000600	Resistor	CRH200 R-02J 47 Ω (470)
C1	4010004780	Ceramic	DE1010 SL 560J 6K V
C2	4010004760	Ceramic	DE0910 SL 330J 6K V
C3	4010004770	Ceramic	DE0910 SL 390J 6K V
C4	4010005130	Ceramic	DE0910 SL 470J 6K V
C5	4010005130	Ceramic	DE0910 SL 470J 6K V

[FILTER UNIT]

REF. NO.	ORDER NO.	DESCRIPTION	
C6	4010004770	Ceramic	DE0910 SL 390J 6K V
C7	4010004760	Ceramic	DE0910 SL 330J 6K V
C8	4010004770	Ceramic	DE0910 SL 390J 6K V
C9	4010004800	Ceramic	DE1210 SL 820J 6K V
C10	4010004810	Ceramic	DE1310 SL 101J 6K V
C11	4010004780	Ceramic	DE1010 SL 560J 6K V
C12	4010004780	Ceramic	DE1010 SL 560J 6K V
C13	4010004780	Ceramic	DE1010 SL 560J 6K V
C14	4010004790	Ceramic	DE1210 SL 680J 6K V
C15	4010004780	Ceramic	DE1010 SL 560J 6K V
C16	4010004780	Ceramic	DE1010 SL 560J 6K V
C17	4010004790	Ceramic	DE1210 SL 680J 6K V
C18	4010004780	Ceramic	DE1010 SL 560J 6K V
C19	4010004810	Ceramic	DE1310 SL 101J 6K V
C20	4010004810	Ceramic	DE1310 SL 101J 6K V
C21	4010004800	Ceramic	DE1210 SL 820J 6K V
C22	4010004800	Ceramic	DE1210 SL 820J 6K V
C23	4010004800	Ceramic	DE1210 SL 820J 6K V
C24	4010004810	Ceramic	DE1310 SL 101J 6K V
C25	4010004820	Ceramic	DE1410 SL 121J 6K V
C26	4010004830	Ceramic	DE1510 SL 151J 6K V
C27	4010004830	Ceramic	DE1510 SL 151J 6K V
C28	4010004830	Ceramic	DE1510 SL 151J 6K V
C29	4010004820	Ceramic	DE1410 SL 121J 6K V
C30	4010004820	Ceramic	DE1410 SL 121J 6K V
C31	4010004810	Ceramic	DE1310 SL 101J 6K V
C32	4010004800	Ceramic	DE1210 SL 820J 6K V
C33	4010004820	Ceramic	DE1410 SL 121J 6K V
C34	4010004820	Ceramic	DE1410 SL 121J 6K V
C35	4010004290	Ceramic	DE1310 SL 181J 3K V
C36	4010004830	Ceramic	DE1510 SL 151J 6K V
C37	4010004830	Ceramic	DE1510 SL 151J 6K V
C38	4010004830	Ceramic	DE1510 SL 151J 6K V
C39	4010004290	Ceramic	DE1310 SL 181J 3K V
C40	4010004290	Ceramic	DE1310 SL 181J 3K V
C41	4010004740	Ceramic	DE1207 SL 271J 2K V
C42	4010004740	Ceramic	DE1207 SL 271J 2K V
C43	4010004740	Ceramic	DE1207 SL 271J 2K V
C44	4010004750	Ceramic	DE1510 SL 331J 2K V
C45	4010004740	Ceramic	DE1207 SL 271J 2K V
C46	4010004740	Ceramic	DE1207 SL 271J 2K V
C47	4010004750	Ceramic	DE1510 SL 331J 2K V
C48	4010004750	Ceramic	DE1510 SL 331J 2K V
C49	4320000250	Dip Mica	DM20C 561J5
C50	4320000250	Dip Mica	DM20C 561J5
C51	4320000250	Dip Mica	DM20C 561J5
C52	4320000250	Dip Mica	DM20C 561J5
C53	4320000250	Dip Mica	DM20C 561J5
C54	4320000250	Dip Mica	DM20C 561J5
C55	4320000260	Dip Mica	DM20C 681J5
C56	4320000260	Dip Mica	DM20C 681J5
C58	4010000520	Ceramic	DD108 B 472K 50V
C60	4010000520	Ceramic	DD108 B 472K 50V
C62	4010000520	Ceramic	DD108 B 472K 50V
C64	4040000250	Barrier Layer	UAT 08X 473M
C66	4040000250	Barrier Layer	UAT 08X 473M
C68	4040000250	Barrier Layer	UAT 08X 473M
C70	4040000250	Barrier Layer	UAT 08X 473M
C71	4010000420	Ceramic	DD108 SL 391J 50V
C72	4010000420	Ceramic	DD108 SL 391J 50V
C73	4610001220	Trimmer	CVE101-56 (100P)
C74	4010000390	Ceramic	DD107 SL 271J 50V
C75	4010000520	Ceramic	DD108 B 472K 50V
C76	4010004940	Ceramic	DE0705 SL 470J 1K V
C77	4010004320	Ceramic	DE0705 SL 180J 1K V
C78	4010004940	Ceramic	DE0705 SL 470J 1K V
C79	4010004320	Ceramic	DE0705 SL 180J 1K V
C80	4010004310	Ceramic	DE0705 SL 100D 1K V
C81	4010004310	Ceramic	DE0705 SL 100D 1K V
C82	4010003850	Ceramic	DD06 SL 080D 500V
RL1	6330000740	Relay	AJW 2511 (J W1AFHN-DC12V)

ManualsPlus.com

[FILTER UNIT]

REF. NO.	ORDER NO.	DESCRIPTION	
RL2	6330000751	Relay	AJW 4511
RL3	6330000751	Relay	AJW 4511
RL4	6330000751	Relay	AJW 4511
RL5	6330000751	Relay	AJW 4511
RL6	6330000751	Relay	AJW 4511
RL7	6330000751	Relay	AJW 4511
RL8	6330000751	Relay	AJW 4511
RL9	6330000751	Relay	AJW 4511
RL10	6330000751	Relay	AJW 4511
RL11	6330000751	Relay	AJW 4511
RL12	6330000751	Relay	AJW 4511
RL13	6330000751	Relay	AJW 4511
RL14	6330000751	Relay	AJW 4511
RL15	6330000780	Relay	AGP 2013 (DSP1-DC12V)
EP1	0910018519	P.C. Board	B 1737I (FILTER)
EP2	6510006060	Lead Frame	P-422
EP3	6510006060	Lead Frame	P-422

[COMBAINR UNIT]

REF. NO.	ORDER NO.	DESCRIPTION	
D1	1710000040	Diode	1S953
D2	1710000040	Diode	1S953
D3	1710000040	Diode	1S953
L1	6140000970	Coil	LR-119
L2	6140000970	Coil	LR-119
L3	6140001950	Coil	LR-211
L4	6140001960	Coil	LR-213
R1	7080000710	Resistor	RS3B 100 Ω
R2	7080000710	Resistor	RS3B 100 Ω
R3	7010001030	Resistor	R25XJ 100 Ω
R4	7010000130	Resistor	ELR25J 10 Ω
R5	7010000130	Resistor	ELR25J 10 Ω
R6	7100000580	Resistor	SRW7P-M 50 Ω J (500)
R7	7010000090	Resistor	ELR25J 4.7 Ω
R8	7010000150	Resistor	ELR25J 15 Ω
R9	7010000130	Resistor	ELR25J 10 Ω
R10	7010000130	Resistor	ELR25J 10 Ω
R11	7010001030	Resistor	R25XJ 100 Ω
C1	4040000250	Barrier Layer	UAT 08X 473M
C2	4040000250	Barrier Layer	UAT 08X 473M
C3	4010004810	Ceramic	DE1310 SL 101J 6K V
C4	4010004810	Ceramic	DE1310 SL 101J 6K V
EP1	0910018503	P.C. Board	B 1739C (COMBINR)
EP4	0910020780	P.C. Board	B 2047

[SPLITR UNIT]

REF. NO.	ORDER NO.	DESCRIPTION	
D1	1710000350	Diode	1N4002
D2	1710000040	Diode	1S953
D3	1710000210	Diode	GU-3Z
D4	1710000210	Diode	GU-3Z
L1	6140000970	Coil	LR-119
L2	6140000970	Coil	LR-119
L3	6140000100	Coil	LR-22A

[SPLITR UNIT]

REF. NO.	ORDER NO.	DESCRIPTION	
L4	6140000100	Coil	LR-22A
L5	6180000900	Coil	LAL 03NA 101K
L6	6180000900	Coil	LAL 03NA 101K
L7	6180000900	Coil	LAL 03NA 101K
R1	7010004720	Resistor	R50XJ 100 Ω
R2	7010004720	Resistor	R50XJ 100 Ω
R3	7010004720	Resistor	R50XJ 100 Ω
R4	7010004720	Resistor	R50XJ 100 Ω
R5	7010005000	Resistor	R50XJ 4.7 kΩ
R6	7010000330	Resistor	ELR25J 470 Ω
R7	7010001320	Resistor	R25XJ 22 kΩ
R8	7010000370	Resistor	ELR25J 1 kΩ
R9	7100000580	Resistor	SRW7P-M 50 Ω J (500)
R10	7100000580	Resistor	SRW7P-M 50 Ω J (500)
R11	7100000580	Resistor	SRW7P-M 50 Ω J (500)
R12	7100000580	Resistor	SRW7P-M 50 Ω J (500)
R13	7070000590	Resistor	CRH100X R-02J 33 kΩ (333)
C1	4010000520	Ceramic	DD108 B 472K 50V
C2	4010000520	Ceramic	DD108 B 472K 50V
C3	4510002980	Electrolytic	50 SS 10 μF
C4	4010000590	Ceramic	DD110 F 473Z 50V
C5	4010000590	Ceramic	DD110 F 473Z 50V
C6	4010003890	Ceramic	DD06 SL 180K 500V
C7	4010003890	Ceramic	DD06 SL 180K 500V
C8	4010003890	Ceramic	DD06 SL 180K 500V
C9	4010003890	Ceramic	DD06 SL 180K 500V
C10	4010004000	Ceramic	DD09 SL 820K 500V
C11	4010004000	Ceramic	DD09 SL 820K 500V
C12	4010003930	Ceramic	DD06 SL 270K 500V
C13	4010004210	Ceramic	DD63 YZ 203Z 500V
C14	4010004100	Ceramic	DD14 SL 331K 500V
C15	4010000650	Ceramic	DD104 CH 050C 50V
C16	4510001730	Electrolytic	50 RBP 0.47 μF
RL1	6330000720	Relay	DS1-M-DC12V (AG2 013)
EP1	0910018494	P.C. Board	B 1738D (SPLITR)

[ACC UNIT]

REF. NO.	ORDER NO.	DESCRIPTION	
D1	1710000040	Diode	1S953
D2	1710000040	Diode	1S953
L1	6910000670	Coil	BT01RN1-A61-001
L2	6180000900	Coil	LAL 03NA 101K
L3	6180000900	Coil	LAL 03NA 101K
L4	6180000900	Coil	LAL 03NA 101K
L5	6180000900	Coil	LAL 03NA 101K
L101	6180000990	Coil	LAL 04NA 101K
L102	6180000900	Coil	LAL 03NA 101K
L103	6180000900	Coil	LAL 03NA 101K
L104	6180000900	Coil	LAL 03NA 101K
L105	6180000900	Coil	LAL 03NA 101K
L106	6180000900	Coil	LAL 03NA 101K
L107	6180000900	Coil	LAL 03NA 101K
L108	6180000900	Coil	LAL 03NA 101K
L109	6180000900	Coil	LAL 03NA 101K
L110	6180000900	Coil	LAL 03NA 101K
L111	6180000900	Coil	LAL 03NA 101K
L112	6180000900	Coil	LAL 03NA 101K
L113	6180000900	Coil	LAL 03NA 101K
L114	6180000990	Coil	LAL 04NA 101K
L115	6180000900	Coil	LAL 03NA 101K

ManualsPlus.com

[ACC UNIT]

REF. NO.	ORDER NO.	DESCRIPTION	
R1	7210001720	Variable Resistor	EVH-GHAS15B14 (10KB)
C1	4010000520	Ceramic	DD108 B 472K 50V
C2	4010000520	Ceramic	DD108 B 472K 50V
C3	4010000520	Ceramic	DD108 B 472K 50V
C4	4010000520	Ceramic	DD108 B 472K 50V
C5	4010000520	Ceramic	DD108 B 472K 50V
C6	4010000590	Ceramic	DD110 F 473Z 50V
C7	4010000590	Ceramic	DD110 F 473Z 50V
C101	4530000250	Capacitor Array	B8XC0112-32N
C102	4530000250	Capacitor Array	B8XC0112-32N
C103	4010000520	Ceramic	DD108 B 472K 50V
EP1	0910020722	P.C. Board	B 1742B (ACC)
EP101	0910020731	P.C. Board	B 1801A

[PA UNIT]

REF. NO.	ORDER NO.	DESCRIPTION	
Q1	1530000140	Transistor	2SC2652
Q2	1530000140	Transistor	2SC2652
Q3	1540000060	Transistor	2SD880-Y
D1	1790000020	Diode	MV5W
L1	6140000220	Coil	LR-38A
L2	6140000590	Coil	LR-81
L3	6140000590	Coil	LR-81
L4	6140000710	Coil	LR-94
L5	6140000720	Coil	LR-95
L6	6170000200	Coil	LW-21
L7	6910000670	Coil	BT01RN1-A61-001
R1	7070000520	Resistor	CRH300 R-02J 2.7 Ω (2R7)
R2	7070000520	Resistor	CRH300 R-02J 2.7 Ω (2R7)
R3	7070000520	Resistor	CRH300 R-02J 2.7 Ω (2R7)
R4	7070000520	Resistor	CRH300 R-02J 2.7 Ω (2R7)
R5	7010004660	Resistor	R50XJ 15 Ω
R6	7010004660	Resistor	R50XJ 15 Ω
R7	7070000520	Resistor	CRH300 R-02J 2.7 Ω (2R7)
R8	7070000520	Resistor	CRH300 R-02J 2.7 Ω (2R7)
R9	7310000230	Trimmer	FR10B 500 Ω
R10	7010000280	Resistor	ELR25J 180 Ω
R11	7100000600	Resistor	20SH0.005-KA-1
R17	7510000140	Thermistor	ERT-D2FHL802S
R18	7080000220	Resistor	CRB25FX 1 kΩ
R19	7100000590	Resistor	BWR5N 51 Ω J
C2	4030003310	Ceramic	GR111 CH 102K 50P B
C5	4510002730	Electrolytic	10 SS 100 μF
C6	4040000250	Barrier Layer	UAT 08X 473M
C7	4030003310	Ceramic	GR111 CH 102K 50P B
C8	4010004210	Ceramic	DD63 YZ 203Z 500V
C9	4010004210	Ceramic	DD63 YZ 203Z 500V
C10	4040000250	Barrier Layer	UAT 08X 473M
C11	4510002780	Electrolytic	16 SS 10 μF
C12	4010004210	Ceramic	DD63 YZ 203Z 500V
C13	4510002980	Electrolytic	50 SS 10 μF
C14	4010000520	Ceramic	DD108 B 472K 50V
S1	6910000050	Thermostat	OHD-3 50M
S2	6910000060	Thermostat	OHD-3 90M
EP1	0910020701	P.C. Board	B 2049A (PA)
EP4	6510006060	Lead Frame	P-422

[TUNER UNIT]

REF. NO.	ORDER NO.	DESCRIPTION	
D1	1710000350	Diode	1N4002
D2	1710000350	Diode	1N4002
D3	1710000350	Diode	1N4002
D4	1710000350	Diode	1N4002
D5	1710000350	Diode	1N4002
D6	1710000350	Diode	1N4002
D7	1710000350	Diode	1N4002
D8	1710000350	Diode	1N4002
D9	1710000350	Diode	1N4002
L1	6180000990	Coil	LAL 04NA 101K
L2	6180000990	Coil	LAL 04NA 101K
L3	6180000990	Coil	LAL 04NA 101K
L4	6180000990	Coil	LAL 04NA 101K
L5	6180000990	Coil	LAL 04NA 101K
L6	6180000990	Coil	LAL 04NA 101K
L7	6180000990	Coil	LAL 04NA 101K
L8	6180000990	Coil	LAL 04NA 101K
L9	6180000990	Coil	LAL 04NA 101K
L10	6130002330	Coil	LB-255
R1	7310001050	Trimmer	EVH60AF15B14 (10KB)
R2	7310001050	Trimmer	EVH60AF15B14 (10KB)
R3	7080001170	Resistor	MFC 1P K 4703 F (470 kΩ)
R4	7080001170	Resistor	MFC 1P K 4703 F (470 kΩ)
R5	7540000050	Absorber	DSA-701MA
C1	4010004810	Ceramic	DE1310 SL 101J 6K V
C2	4010004810	Ceramic	DE1310 SL 101J 6K V
C3	4010004830	Ceramic	DE1510 SL 151J 6K V
C4	4010004820	Ceramic	DE1410 SL 121J 6K V
C5	4010004820	Ceramic	DE1410 SL 121J 6K V
C6	4010004820	Ceramic	DE1410 SL 121J 6K V
C9	4010000520	Ceramic	DD108 B 472K 50V
C10	4010000520	Ceramic	DD108 B 472K 50V
C11	4010000520	Ceramic	DD108 B 472K 50V
C12	4010000520	Ceramic	DD108 B 472K 50V
C13	4010000520	Ceramic	DD108 B 472K 50V
C14	4010000520	Ceramic	DD108 B 472K 50V
C15	4010000520	Ceramic	DD108 B 472K 50V
C16	4010000520	Ceramic	DD108 B 472K 50V
C17	4010000520	Ceramic	DD108 B 472K 50V
C18	4040000250	Barrier Layer	UAT 08X 473M
C19	4040000250	Barrier Layer	UAT 08X 473M
C20	4010005040	Ceramic	DE0707 SL 180J 3K V
C21	4010000520	Ceramic	DD108 B 472K 50V
C22	4010000520	Ceramic	DD108 B 472K 50V
C23	4010000520	Ceramic	DD108 B 472K 50V
C24	4010000520	Ceramic	DD108 B 472K 50V
C25	4530000250	Capacitor Array	B8XC0112-32N
C26	4010000520	Ceramic	DD108 B 472K 50V
C27	4010000520	Ceramic	DD108 B 472K 50V
C28	4010000520	Ceramic	DD108 B 472K 50V
C29	4010005040	Ceramic	DE0707 SL 180J 3K V
RL1	6330000770	Relay	AJR 3231 (JR2A-DC12V)
RL2	6330000770	Relay	AJR 3231 (JR2A-DC12V)
RL3	6330000770	Relay	AJR 3231 (JR2A-DC12V)
RL4	6330000770	Relay	AJR 3231 (JR2A-DC12V)
RL5	6330000751	Relay	AJW 4511
RL6	6330000751	Relay	AJW 4511
RL7	6330000570	Relay	AR-39251
RL8	6330000570	Relay	AR-39251
RL9	6330000570	Relay	AR-39251
RL10	6330000570	Relay	AR-39251
RL11	6330000570	Relay	AR-39251
RL12	6330000570	Relay	AR-39251
RL13	6330000570	Relay	AR-39251
RL14	6330000570	Relay	AR-39251
RL15	6330000570	Relay	AR-39251
RL16	6330000570	Relay	AR-39251

ManualsPlus.com

[TUNER UNIT]

REF. NO.	ORDER NO.	DESCRIPTION	
EP1	0910018487	P.C. Board	B 1740G (TUNER)
EP2	6510006060	Lead Frame	P-422
EP3	6510006060	Lead Frame	P-422
EP4	6510009830	Lead Frame	P-424
EP5	6510009830	Lead Frame	P-424
EP6	6510006060	Lead Frame	P-422
EP7	6510006060	Lead Frame	P-422
EP8	6510006060	Lead Frame	P-422
EP9	6510006060	Lead Frame	P-422
EP10	6510006060	Lead Frame	P-422
EP11	6510006060	Lead Frame	P-422
EP12	6510006060	Lead Frame	P-422

[DET UNIT]

REF. NO.	ORDER NO.	DESCRIPTION	
IC1	1110001850	IC	MC10116L
IC2	1110001860	IC	MC10125L
IC3	1120000500	IC	SN74S112N
IC4	1120001640	IC	SN74S32N
Q1	1560000040	FET	2SK30ATM-Y
D1	1710000330	Diode	1K60
D2	1710000330	Diode	1K60
D3	1710000330	Diode	1K60
D4	1710000330	Diode	1K60
D5	1710000580	Diode	1SS265
D6	1710000580	Diode	1SS265
D7	1710000580	Diode	1SS265
D8	1710000580	Diode	1SS265
L1	6140001030	Coil	LR-127A
L2	6180000450	Coil	RFC L6 222K
L3	6180001220	Coil	LAL 04NA 100K
L4	6180001220	Coil	LAL 04NA 100K
L5	6180000960	Coil	LAL 03NA 102K
L6	6180000960	Coil	LAL 03NA 102K
R1	7010004840	Resistor	R50XJ 39 Ω
R2	7010004840	Resistor	R50XJ 39 Ω
R3	7010004690	Resistor	R50XJ 47 Ω
R4	7010004690	Resistor	R50XJ 47 Ω
R5	7010003530	Resistor	ELR20J 10 k Ω
R6	7010003530	Resistor	ELR20J 10 k Ω
R7	7010003780	Resistor	ELR20J 1 M Ω
R8	7010003530	Resistor	ELR20J 10 k Ω
R9	7010003480	Resistor	ELR20J 4.7 k Ω
R10	7010004190	Resistor	R20J 1 k Ω
R11	7010003360	Resistor	ELR20J 470 Ω
R12	7010004150	Resistor	R20J 470 Ω
R13	7010004150	Resistor	R20J 470 Ω
R14	7010004150	Resistor	R20J 470 Ω
R15	7010003440	Resistor	ELR20J 2.2 k Ω
R16	7010003440	Resistor	ELR20J 2.2 k Ω
R17	7010004190	Resistor	R20J 1 k Ω
C1	4010004310	Ceramic	DE0705 SL 100D 1K V
C2	4010000520	Ceramic	DD108 B 472K 50V
C3	4010000520	Ceramic	DD108 B 472K 50V
C4	4010003800	Ceramic	DD06 SL 030C 500V
C5	4010000420	Ceramic	DD108 SL 391J 50V
C6	4610000480	Trimmer	BW 3P 210P
C7	4010000520	Ceramic	DD108 B 472K 50V
C8	4010000500	Ceramic	DD104 B 102K 50V
C9	4010000520	Ceramic	DD108 B 472K 50V
C10	4010000520	Ceramic	DD108 B 472K 50V

[DET UNIT]

REF. NO.	ORDER NO.	DESCRIPTION	
C11	4010000520	Ceramic	DD108 B 472K 50V
C12	4010000520	Ceramic	DD108 B 472K 50V
C13	4010000520	Ceramic	DD108 B 472K 50V
C14	4010000520	Ceramic	DD108 B 472K 50V
C15	4510002780	Electrolytic	16 SS 10 μF
C16	4010000520	Ceramic	DD108 B 472K 50V
C17	4510002780	Electrolytic	16 SS 10 μF
C18	4010000520	Ceramic	DD108 B 472K 50V
C19	4040000250	Barrier Layer	UAT 08X 473M
C20	4040000250	Barrier Layer	UAT 08X 473M
C22	4010003830	Ceramic	DD06 SL 060D 500V
C23	4010000410	Ceramic	DD107 SL 331J 50V
C24	4010000410	Ceramic	DD107 SL 331J 50V
EP1	0910021492	P.C. Board	B 2023B (DET)

[CONTROL UNIT]

REF. NO.	ORDER NO.	DESCRIPTION	
IC1	1120000970	IC	M54562P
IC2	1130000770	IC	μPD4028BC
IC3	1180000010	IC	TA78L005AP
D1	1710000030	Diode	1S1555
D2	1710000030	Diode	1S1555
L1	6180000990	Coil	LAL 04NA 101K
L2	6180000900	Coil	LAL 03NA 101K
L3	6180000900	Coil	LAL 03NA 101K
L101	6180000990	Coil	LAL 04NA 101K
L102	6180000900	Coil	LAL 03NA 101K
L103	6180000900	Coil	LAL 03NA 101K
L104	6180000900	Coil	LAL 03NA 101K
L105	6180000900	Coil	LAL 03NA 101K
L106	6180000900	Coil	LAL 03NA 101K
L107	6180000900	Coil	LAL 03NA 101K
L108	6180000900	Coil	LAL 03NA 101K
L109	6180000900	Coil	LAL 03NA 101K
L110	6180000900	Coil	LAL 03NA 101K
L111	6180000900	Coil	LAL 03NA 101K
L112	6180000900	Coil	LAL 03NA 101K
L113	6180000900	Coil	LAL 03NA 101K
L114	6180000990	Coil	LAL 04NA 101K
L115	6180000900	Coil	LAL 03NA 101K
R1	7010003440	Resistor	ELR20J 2.2 k Ω
R2	7010004180	Resistor	R20J 820 Ω
R3	7010003390	Resistor	ELR20J 820 Ω
R4	7010004230	Resistor	R20J 2.2 k Ω
R5	7010004180	Resistor	R20J 820 Ω
R6	7010004250	Resistor	R20J 3.3 k Ω
R7	7010003400	Resistor	ELR20J 1 k Ω
R8	7010004230	Resistor	R20J 2.2 k Ω
R9	7010003660	Resistor	ELR20J 100 k Ω
R10	7010004450	Resistor	R20J 100 k Ω
R11	7010004450	Resistor	R20J 100 k Ω
R12	7010004450	Resistor	R20J 100 k Ω
R13	7010004450	Resistor	R20J 100 k Ω
R14	7010004450	Resistor	R20J 100 k Ω
R15	7010003660	Resistor	ELR20J 100 k Ω
R16	7010004230	Resistor	R20J 2.2 k Ω
C1	4510002780	Electrolytic	16 SS 10 μF
C2	4010000520	Ceramic	DD108 B 472K 50V
C3	4510002780	Electrolytic	16 SS 10 μF

ManualsPlus.com

[CONTROL UNIT]

REF. NO.	ORDER NO.	DESCRIPTION	
C4	4510000304C	Electrolytic	16 SS 100 μF
C5	4510003040	Electrolytic	16 SS 100 μF
C6	4010000520	Ceramic	DD108 B 472K 50V
C104	4530000250	Capacitor Array	B8XC0112-32N
C105	4530000250	Capacitor Array	B8XC0112-32N
C106	4010000520	Ceramic	DD108 B 472K 50V
DS1	5040001360	LED	TLG205
DS2	5040001360	LED	TLG205
DS3	5040001360	LED	TLG205
DS4	5040000640	LED	TLR205
DS5	5040000640	LED	TLR205
DS6	5040000640	LED	TLR205
DS8	5040001360	LED	TLG205
DS9	5040001360	LED	TLG205
DS10	5040001360	LED	TLG205
DS11	5040001360	LED	TLG205
DS12	5040001360	LED	TLG205
DS13	5040001360	LED	TLG205
DS14	5040001360	LED	[illegible]
DS15	5040000650	LED	TLY205
DS16	5040000650	LED	TLY205
DS17	5040000650	LED	TLY205
DS18	5040000650	LED	TLY205
DS19	5040000650	LED	TLY205
DS20	5080000060	LED	BQ044-32582A
DS21	5080000060	LED	BQ044-32582A
ME1	5510000310	Meter	KL-294G-4B (ME-23)
ME2	5510000320	Meter	KL-294G-3B (ME-24)
S1	2230000280	Switch	SPPH11089A
S2	2230000280	Switch	SPPH11089A
S3	2230000280	Switch	SPPH11089A
S4	2230000730	Switch	SPEC31034A
S5	2230000720	Switch	SPEC21028A
S101	2220000160	Switch	HSW0474-01-050
EP1	0910020833	P.C. Board	B 1736C
EP101	0910020731	P.C. Board	B 1801A

[DC-DC UNIT]

REF. NO.	ORDER NO.	DESCRIPTION	
Q1	1530002160	Transistor	2SC3162
Q2	1530002160	Transistor	2SC3162
D1	1710000120	Diode	V19B
D2	1710000120	Diode	V19B
D3	1710000120	Diode	V19B
D4	1710000120	Diode	V19B
D5	1710000120	Diode	V19B
D6	1710000120	Diode	V19B
D7	1790000120	Diode	S5KC20
L1	6170000150	Coil	LW-16
L3	6170000150	Coil	LW-16
L4	6180000270	Coil	LB4-101J
R1	7010000450	Resistor	ELR25J 4.7 kΩ
R2	7010000450	Resistor	ELR25J 4.7 kΩ
R3	7070000320	Resistor	CRH100X R-02J 3.3 Ω (3R3)
R4	7070000320	Resistor	CRH100X R-02J 3.3 Ω (3R3)
C1	4510002980	Electrolytic	50 SS 10 μF

[DC-DC UNIT]

REF. NO.	ORDER NO.	DESCRIPTION	
C2	4510002870	Electrolytic	25 SS 100 μF
C3	4510002870	Electrolytic	25 SS 100 μF
C4	4560000050	Ceramic	D67X5T 1E 684M
C5	4510002870	Electrolytic	25 SS 100 μF
C6	4560000050	Ceramic	D67X5T 1E 684M
C7	4510002870	Electrolytic	25 SS 100 μF
C8	4510003040	Electrolytic	16 SS 100 μF
C9	4510002800	Electrolytic	16 SS 33 μF
C10	4510002810	Electrolytic	16 SS 47 μF
C11	4510002780	Electrolytic	16 SS 10 μF
C12	4510002870	Electrolytic	25 SS 100 μF
C13	4510002870	Electrolytic	25 SS 100 μF
T1	5920000050	Transformer	TO-[illegible]
EP1	0910004452	P.C. Board	B443B (DC-DC)

[REG UNIT]

REF. NO.	ORDER NO.	DESCRIPTION	
Q1	1520000060	Transistor	2SB562C
D1	1730000050	Zener	RD3.0E B2
D2	1710000350	Diode	1N4002
D3	1710000350	Diode	1N4002
L1	6180000990	Coil	LAL 04NA 101K
L2	6180000990	Coil	LAL 04NA 101K
L3	6140000700	Coil	LR-92
R1	7010004250	Resistor	R20J 3.3 kΩ
R2	7100000520	Resistor	CP-20LJ 30 Ω
R3	7100000520	Resistor	CP-20LJ 30 Ω
C1	4510002380	Electrolytic	16 SS 470 μF (10X1 2.5)
C2	4010000520	Ceramic	DD108 B 472K 50V
C3	4010000520	Ceramic	DD108 B 472K 50V
C4	4010000520	Ceramic	DD108 B 472K 50V
RL1	6330000760	Relay	AR 8211 (JN 1A-TMP-DC12V)
RL2	6330000760	Relay	AR 8211 (JN 1A-TMP-DC12V)
RL3	6330000760	Relay	AR 8211 (JN 1A-TMP-DC12V)
DS101	5040001350	LED	MP073
DS102	5040001340	LED	MP072
EP1	0910020802	P.C. Board	B 2024B (REG)
EP2	6910002090	Lead Frame	TR23 X 11 X 14 3 A6

ManualsPlus.com

SECTION 7 MECHANICAL PARTS AND DISASSEMBLY

7–1 LINEAR AMPLIFIER UNIT

LABEL NUMBER	ORDER NO.	DESCRIPTION	QTY.
①	8010008211	Center partition plate	1
②	6510008350	Terminal ML1750-4P	1
③	8810000390	TERMINAL screw M4 × 12	4
④	8310016520	Front plate	1
⑤	8810005770	Screw BiH M3 × 8 ZK	6
6	8210004460	Front panel (A)	1
7	8010008220	SUB chassis	1
8	8810004690	Screw BiH M4 × 5 ZK BS	23
9	8810005970	Screw FH M4 × 6	4
⑩	8810003330	Setscrew B M4 × 8	4
⑪	8810000230	Screw PH M3 × 6	26
⑫	8010008240	Chassis cover	1
13	8010008200	Center chassis	1
14	8510005590	Filter case	1
15	8510005600	Filter case cover	1
⑯	8510006010	Filter shield plate	1
⑰	8810000210	Screw PH M3 × 4	2
⑱	8810005970	Screw FH M4 × 6	16
⑲	8810003350	Setscrew C M3 × 5	14
⑳	8010008230	Air duct	1
21	6510000500	Lead frame L-3552	1
22	8410001280	Heatsink angle (B)	1
㉓	8410001270	Heatsink angle (A)	1
㉔	8410001260	84 Heatsink	1
㉕	7100000600	Resistor 20 SH0.005-KA-1	1
26	8810003680	Icom screw A 8	2
27	8930015371	Resistor plate (B)	1
㉘	8930015351	Resistor plate (A)	1
㉙	8850000420	Spring washer M3 Ni	2
㉚	8830000100	Nut M3	2
㉛	8010008260	PA cover	1
32	8010008191	Rear panel-1	1
33	8810005610	Screw BiH M3 × 6 ZK	4
㉞	6510000410	Connector MR-DSE-02	1
㉟	8810001980	Screw PH M5 × 16 Ni BS	1
㊱	8850000990	Star washer M5 Ni	1
㊲	8850000440	Spring washer M5 Ni	1
38	8830000210	Nut M5 Ni BS	1
39	8850000150	Flat washer M5 Ni BS	2
㊵	8830000360	Wing Nut M5 Ni	1
㊶	8930006170	Shaft cover	1
㊷	8110003230	Top cover	1
㊸	8810003370	Setscrew C M3 × 8	28
㊹	8860000110	Ground lug B3 (M4) AG BS	2
㊺	8810003350	Setscrew C M3 × 5	4
㊻	8810000230	Screw PH M3 × 6	6
㊼	6510009290	Connector MR-DS-E 02 (AG)	1

Screw abbreviations PH: Pan head FH: Flat head B0, B1, FT: Self-tapping screw ZK: Black Ni: Nickel BS: Brass BiH: Binding head

ManualsPlus.com

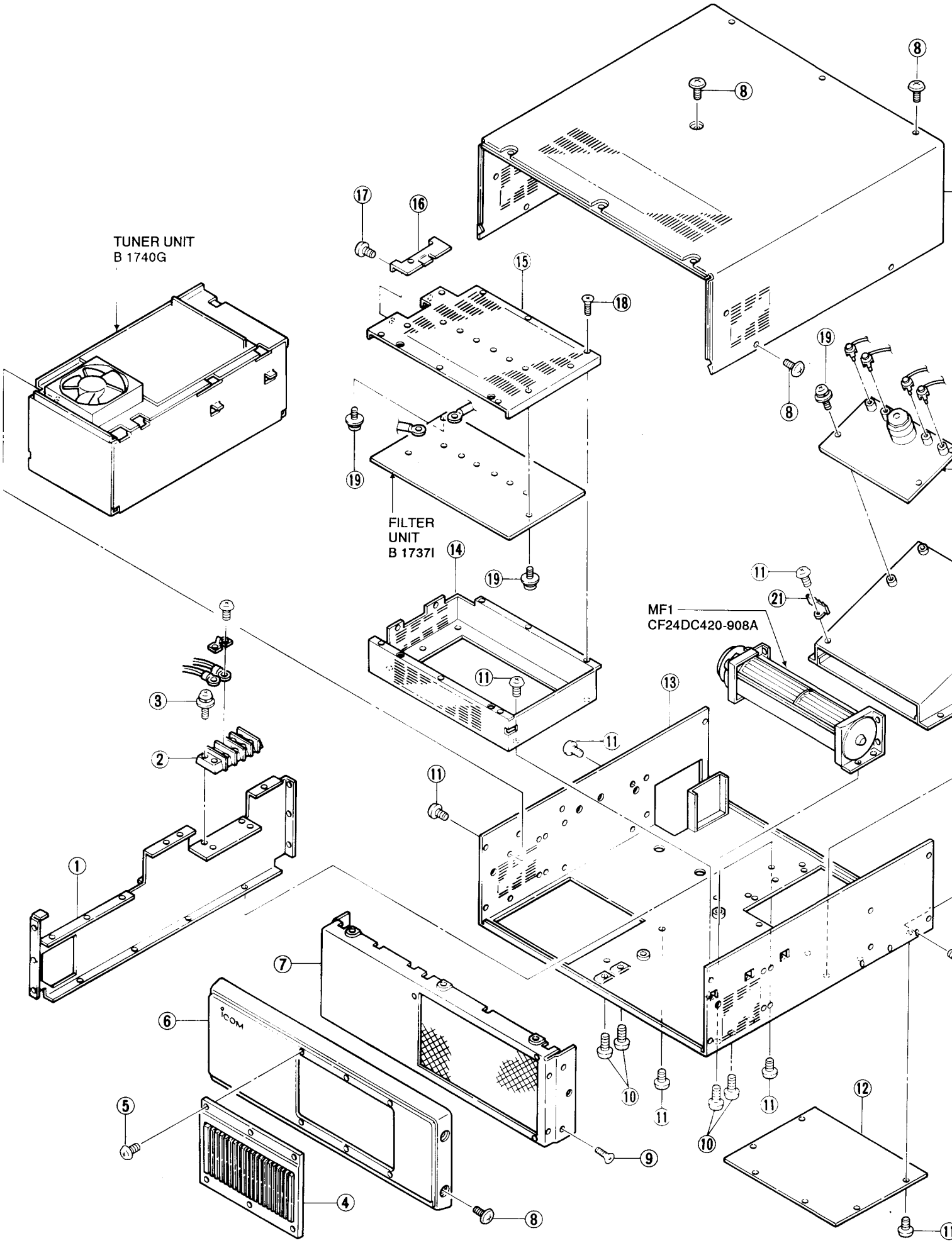

ManualsPlus.com

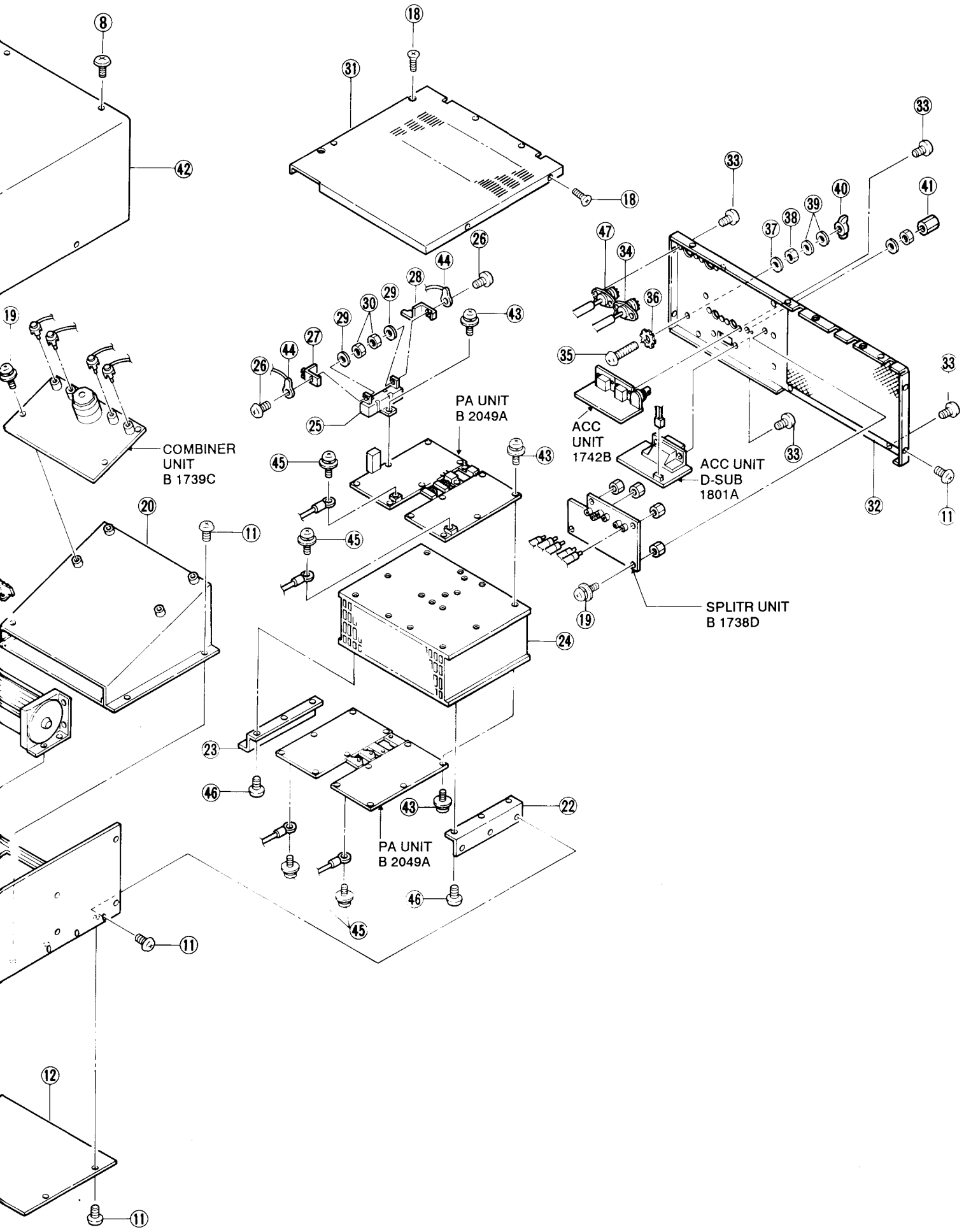

ManualsPlus.com

7–2 POWER SUPPLY UNIT

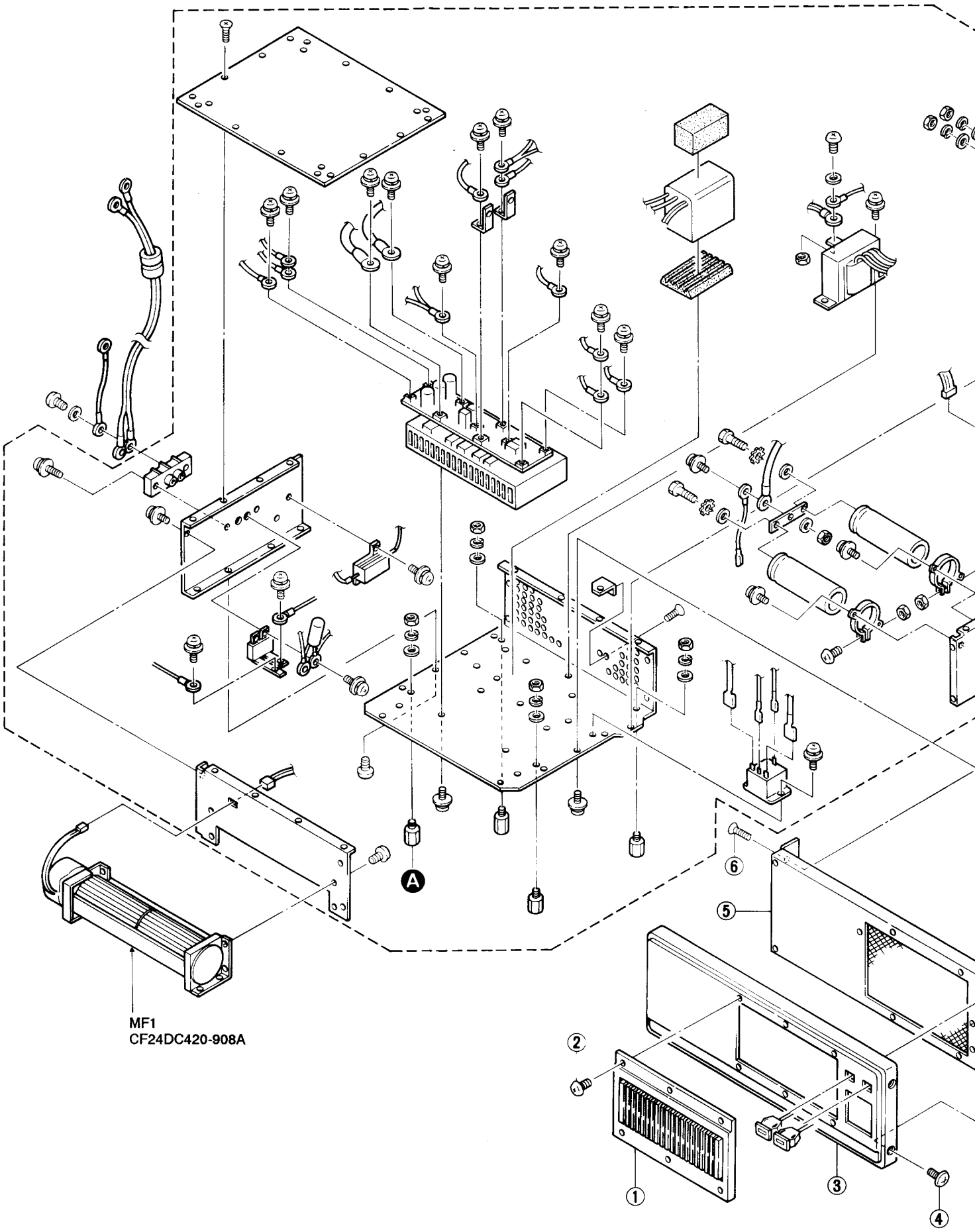

ManualsPlus.com

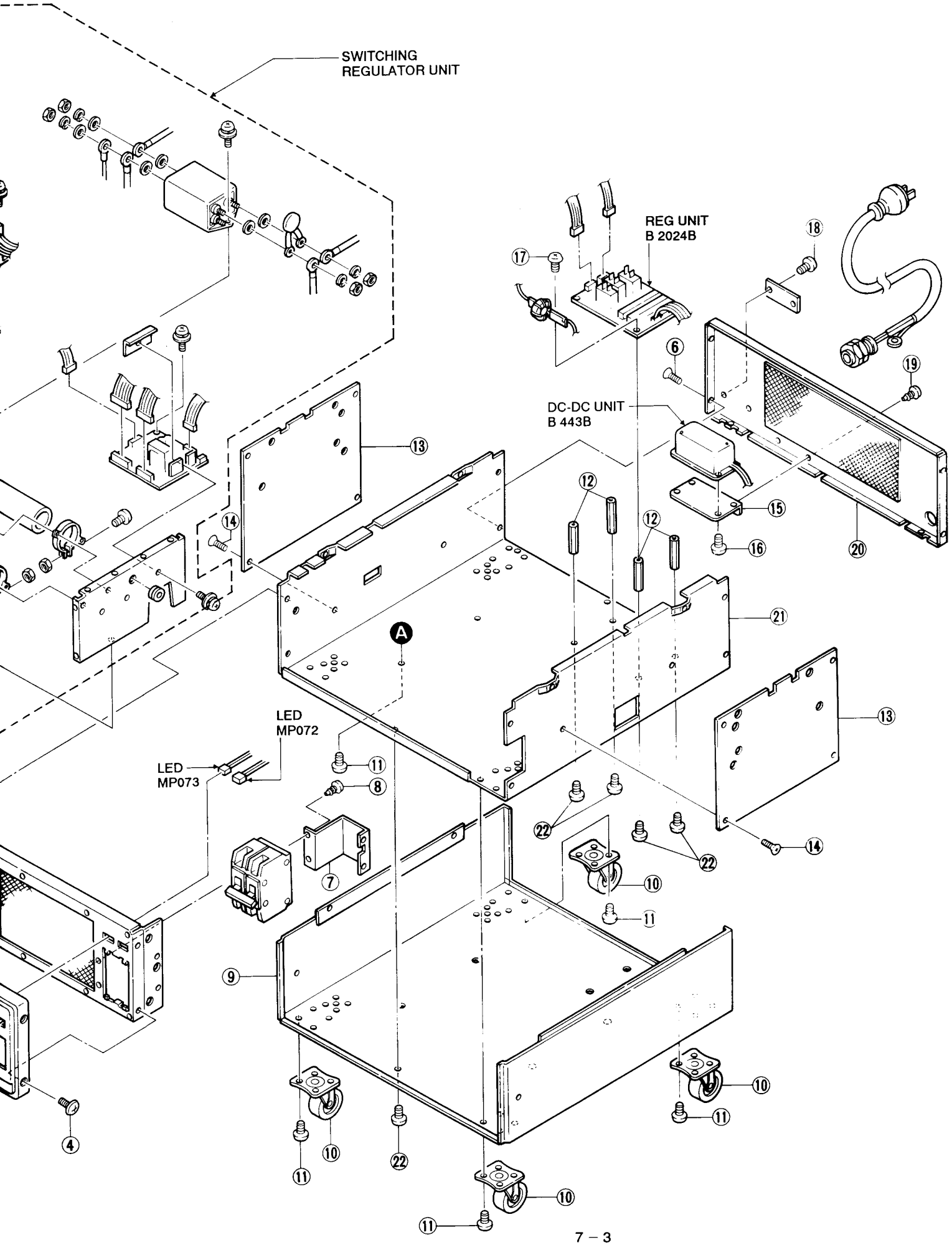

ManualsPlus.com

LABEL NO.	ORDER NO.	DESCRIPTION	QTY.
①	8310016520	Front plate	1
②	8810005770	Screw BiH M3 × 8 ZK	6
③	8210004480	Front panel (B)	1
④	8810004690	Screw BiH M4 × 5 ZK BS	4
⑤	8010008360	SUB chassis	1
⑥	8810005970	Screw FH M4 × 6	4
⑦	8010008370	Breaker holder	1
⑧	8810001110	Screw PH B0 M3 × 6	4
⑨	8110003240	Bottom cover	1
⑩	8930016830	K-420G-32	4
⑪	8810000360	Screw PH M4 × 6	16
⑫	8930000520	Thread spacer (B)	4
⑬	8010008250	Chassis side plate	2
⑭	8810002160	Screw FH M3 × 5	9
⑮	8510000430	DC-DC case	1
⑯	8810001110	Screw PH B0 M3 × 6	4
⑰	8810003350	Setscrew C M3 × 5	4
⑱	8810000980	Screw PH B0 M2 × 4	2
⑲	8810005800	Screw BiH B0 M3 × 6 ZK	2
⑳	8010008351	Rear panel-1	1
㉑	8010008340	Middle chassis	1
㉒	8810000230	Screw PH M3 × 6	4

Screw abbreviations PH: Pan head FH: Flat head B0, B1, FT: Self-tapping screw ZK: Black Ni: Nickel BS: Brass BiH: Binding head

ManualsPlus.com

7-3 TUNER UNIT

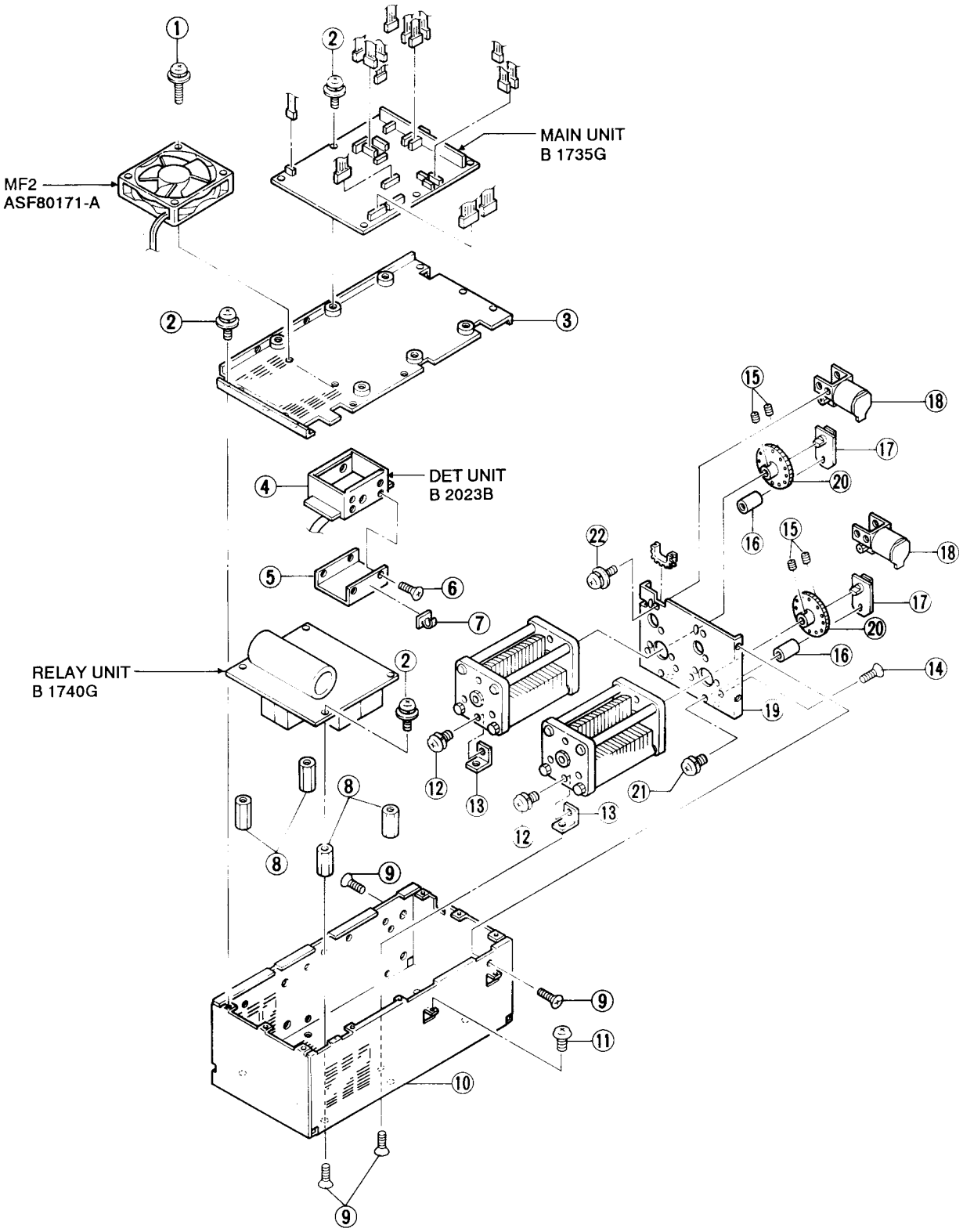

ManualsPlus.com

LABEL NO.	ORDER NO.	DESCRIPTION	QTY.
①	8810005990	Setscrew C M3 × 30	4
②	8810003350	Setscrew C M3 × 5	15
③	8010008290	Tuner top case	1
④	8510001430	DET shield case	1
⑤	8510001560	DET shield case cover	1
⑥	8810002100	Screw FH M2.6 × 4	2
⑦	6910000690	59TC4772	1
⑧	8930000550	Thread spacer (E)	4
⑨	8810002160	Screw FH M3 × 5	4
⑩	8010008280	Tuner case	1
⑪	8810000230	Screw PH M3 × 6	8
⑫	8810003180	Setscrew A M3 × 10	2
⑬	8930002040	VC angle	2
⑭	8810002180	Screw FH M3 × 8	6
⑮	8820000520	Hex socket screw M4 × 6	4
⑯	8930000310	Stopper	2
⑰	8930002050	VR plate	2
⑱	2710000080	Motor HMK2601-01-030	2
⑲	8010008270	Chassis (C)	1
⑳	8930005940	Gear G-16	2
㉑	8810003260	Setscrew A M4 × 6	2
㉒	8810003360	Setscrew C M3 × 6	4

Screw abbreviations PH: Pan head FH: Flat head B0, B1, FT: Self-tapping screw ZK: Black Ni: Nickel BS: Brass BiH: Binding head

ManualsPlus.com

7-4 CONTROLLER UNIT

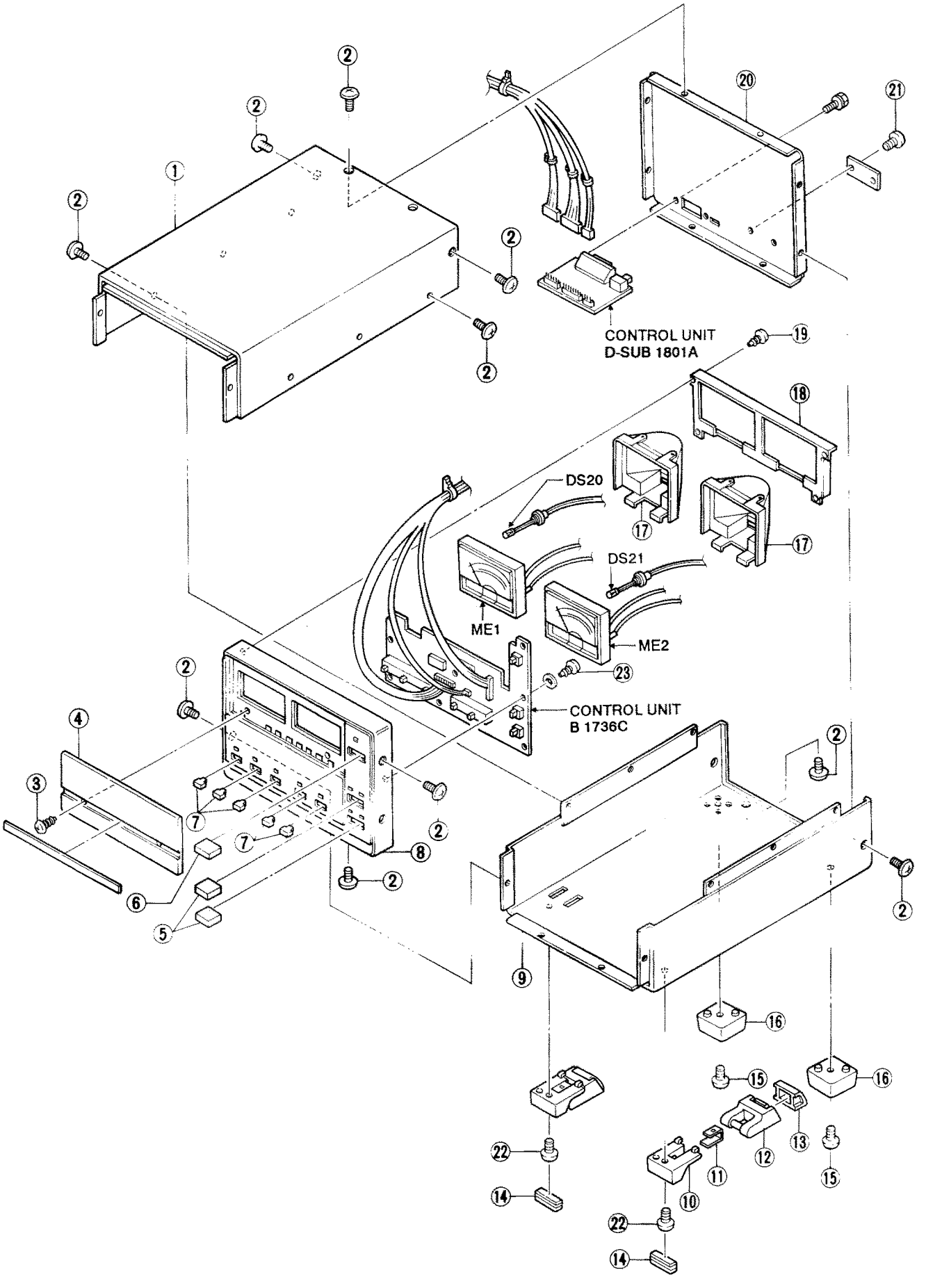

ManualsPlus.com

LABEL NO.	ORDER NO.	DESCRIPTION	QTY.
①	8010008310	Top cover	1
②	8810004690	Screw BiH M4 × 5 ZK BS	20
③	8810000990	Screw PH B0 M2 × 5	2
④	8310016530	Window panel (Europe, France)	1
	8310016300	Window panel (U.S.A., U.S.A.-1)	1
⑤	8610002840	Button K79	2
⑥	8610004930	Button K79 (A)	1
⑦	8610003840	Button K97	5
⑧	8210004470	Front panel	1
⑨	8010008301	Bottom cover-1	1
⑩	8930011640	Main stand	2
⑪	8930011770	Stand spring	2
⑫	8930011630	Sub stand	2
⑬	8930011690	Sub stand rubber	2
⑭	8930011700	Main stand rubber	2
⑮	8810000390	Screw OH M4 × 12	2
⑯	8930011680	Rubber foot (G)	2
⑰	8010005872	560 Meter holder-2	2
⑱	8010008330	Meter frame	1
⑲	8810001110	Screw PH B0 M3 × 6	4
⑳	8010008320	Rear panel	1
㉑	8810001800	Screw PH M2.6 × 4 Ni BS	2
㉒	8810000360	Screw PH M4 × 6	2
㉓	8810001110	Screw PH B0 M3 × 6	8

Screw abbreviations PH: Pan head FH: Flat head B0, B1, FT: Self-tapping screw ZK: Black Ni: Nickel BS: Brass BiH: Binding head

7-5 ACCESSORIES

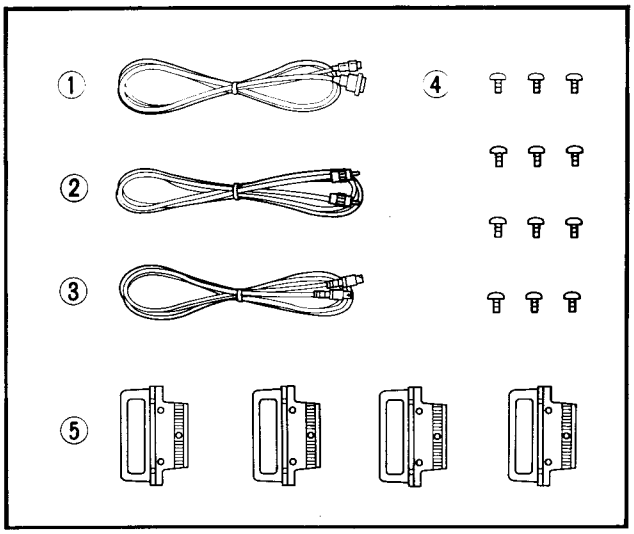

LABEL NO.	ORDER NO.	DESCRIPTION	QTY.
①	8900002280	OPC-216	1
②	8900002270	OPC-125B	1
③	8900002260	OPC-104B	1
④	8810004690	Screw BiH M4 × 8 ZK	12
⑤	8010006700	Rack mounting handle	4

ManualsPlus.com

SECTION 8 BOARD LAYOUTS

8-1 TUNER UNIT

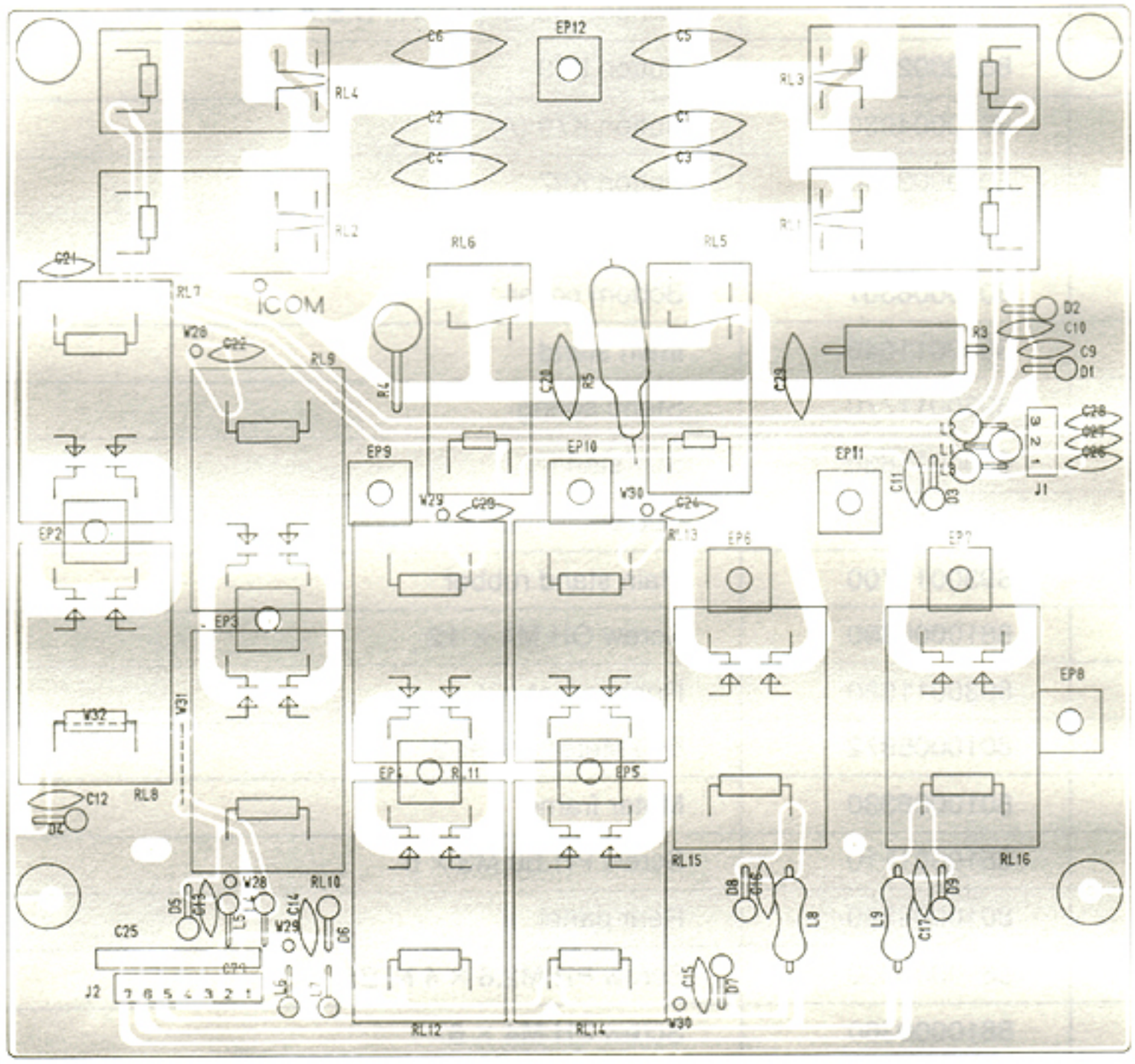

8-2 DET UNIT

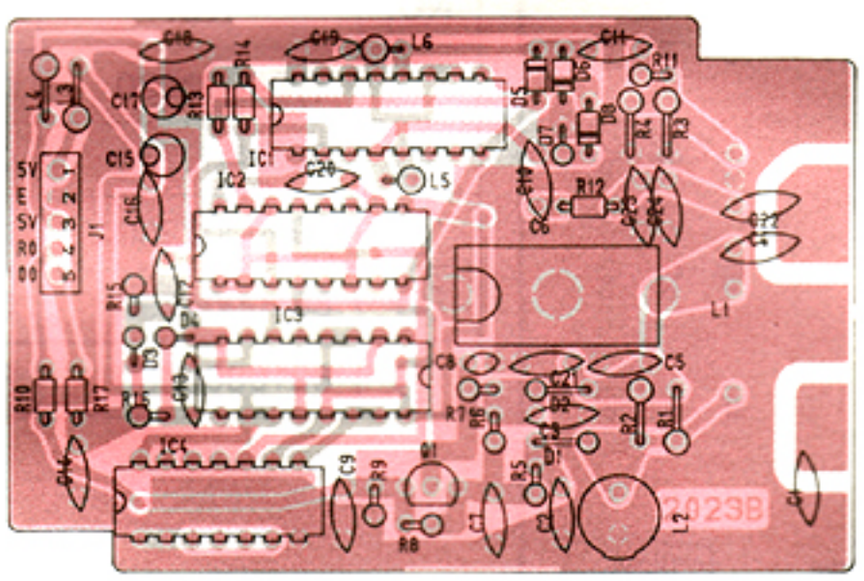

ManualsPlus.com

8-3 REG UNIT

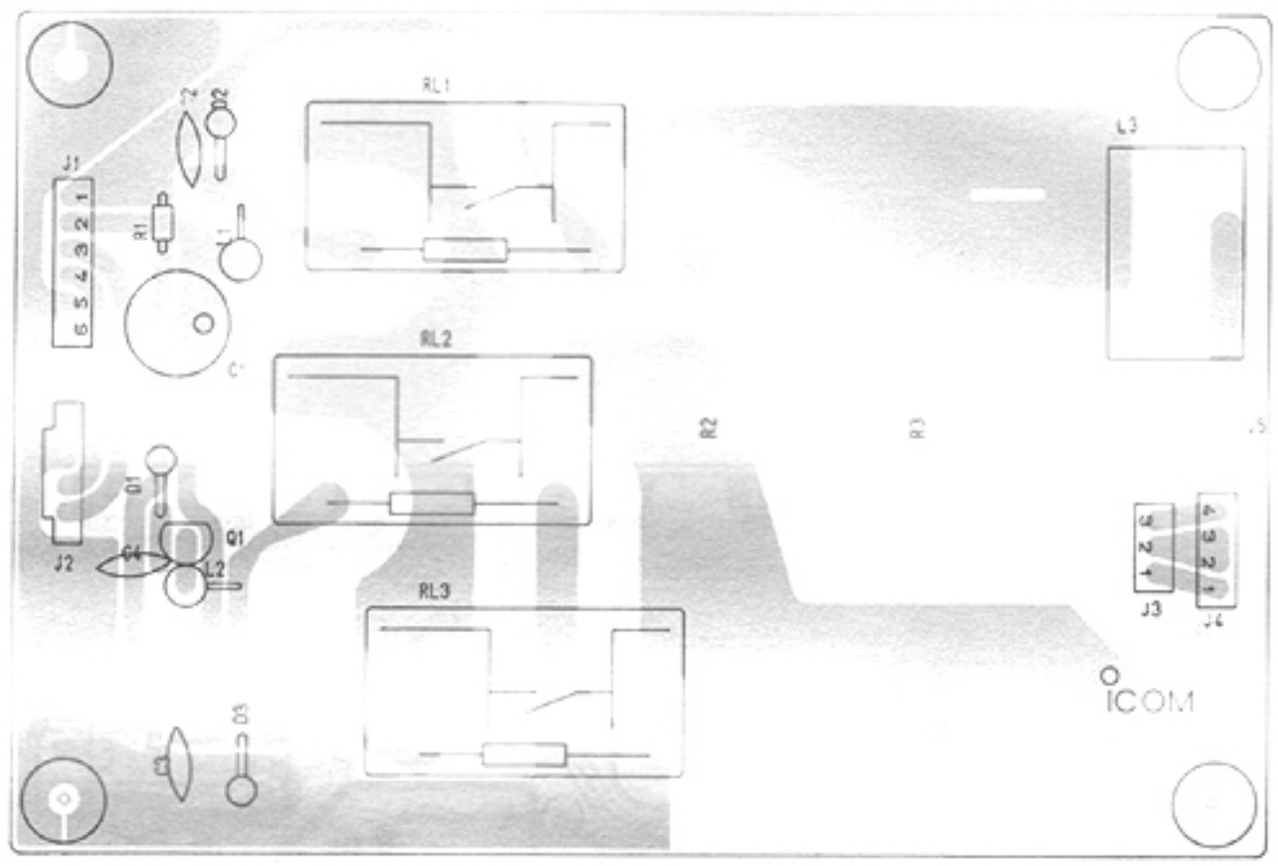

8-4 PA UNIT

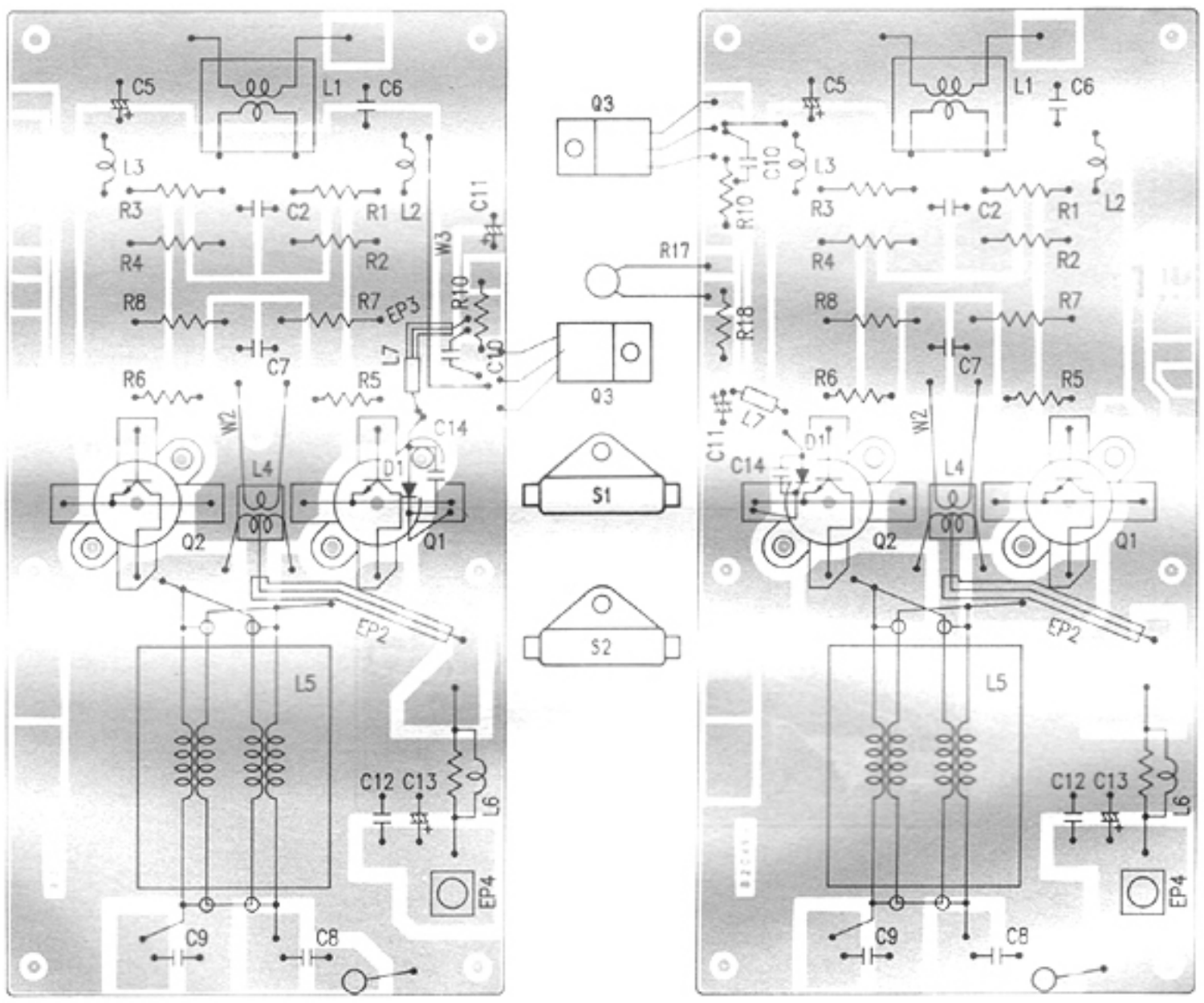

ManualsPlus.com

8-5 CONTROL UNIT

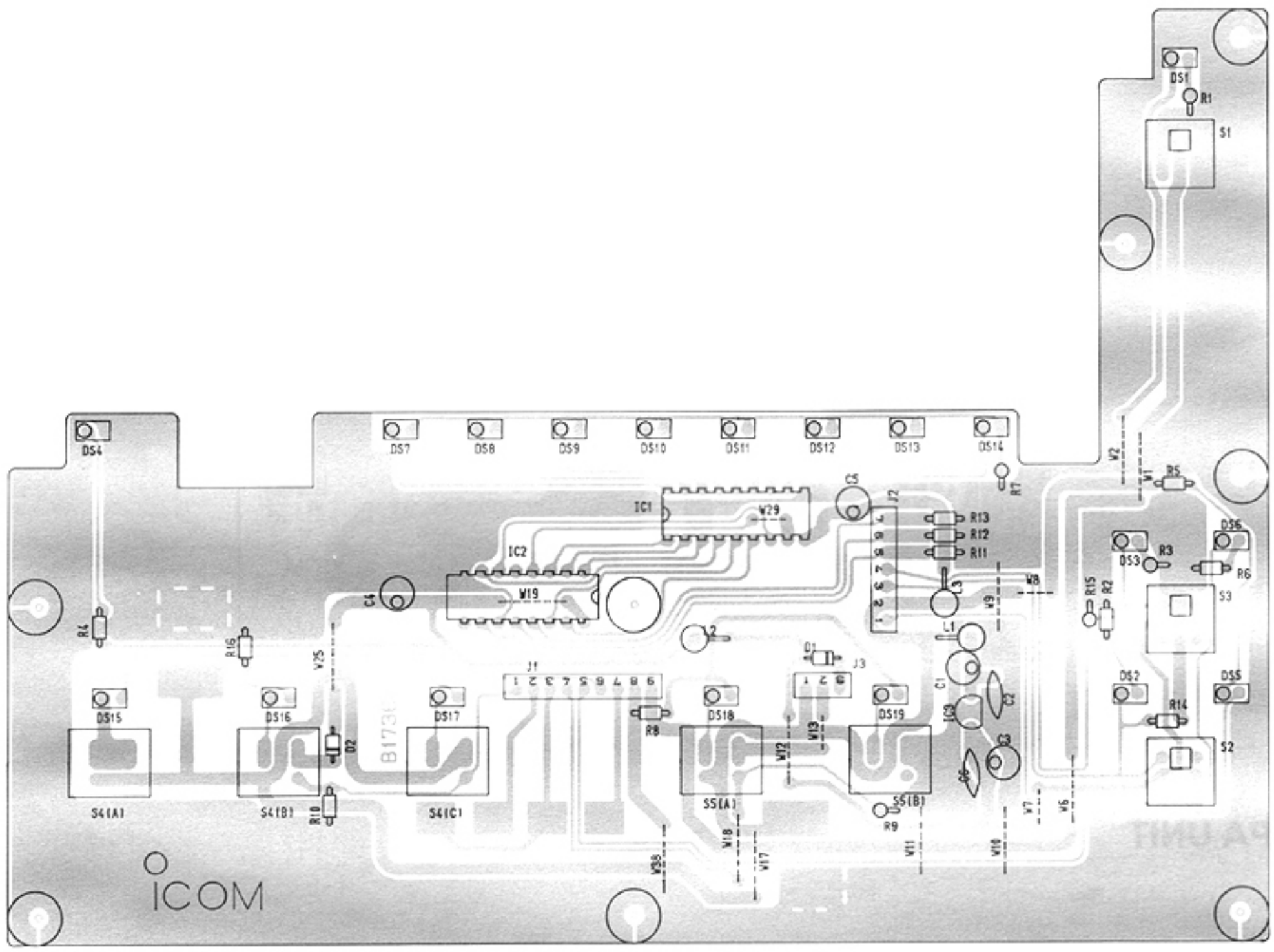

8-6 DC-DC U

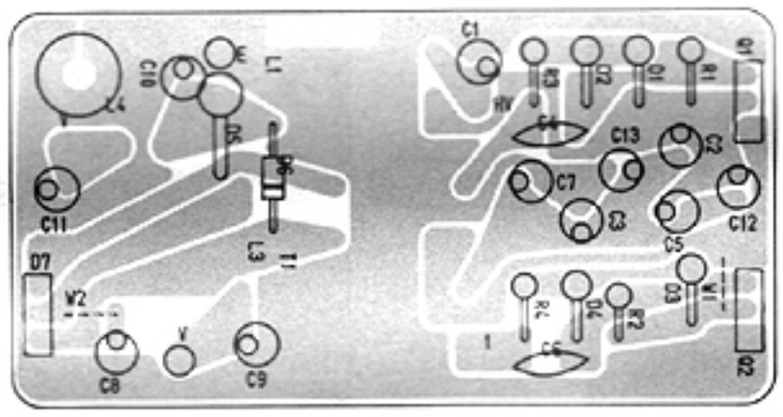

ManualsPlus.com

8-7 ACC UNIT

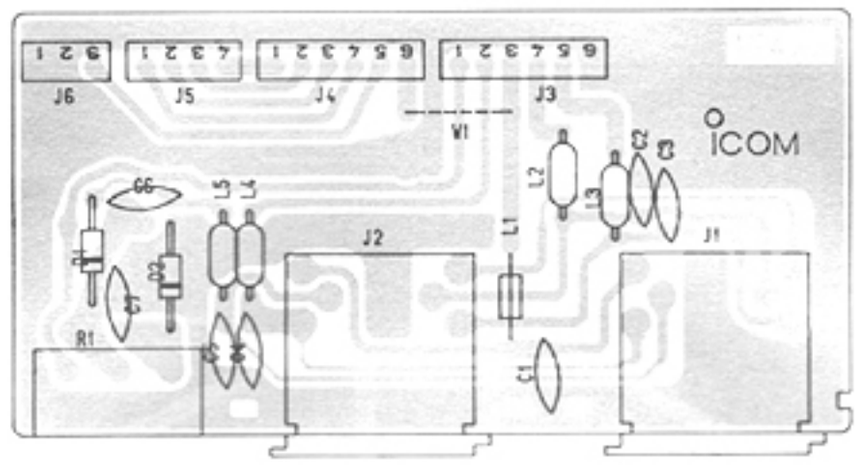

8-8 CONTROL (D-SUB) UNIT

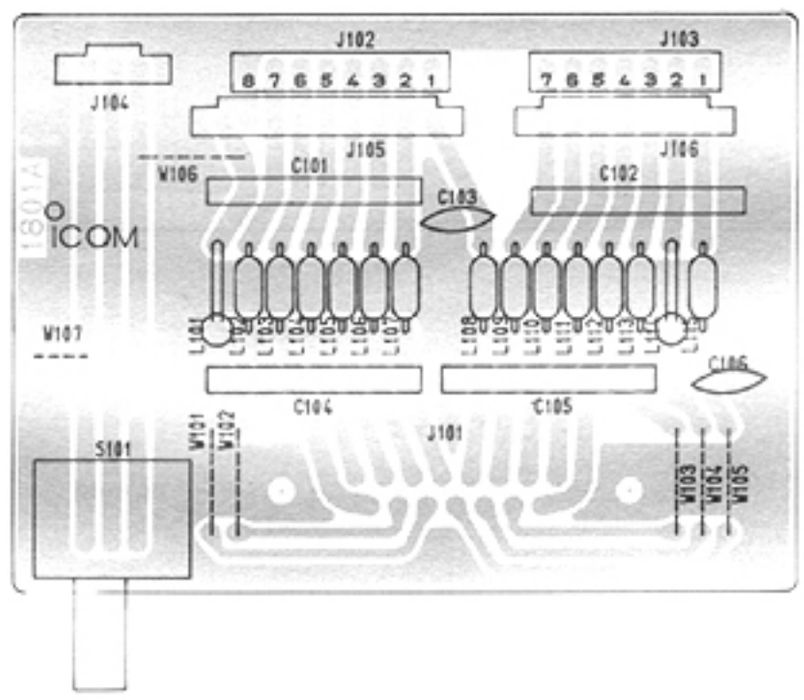

8-9 ACC (D-SUB) UNIT

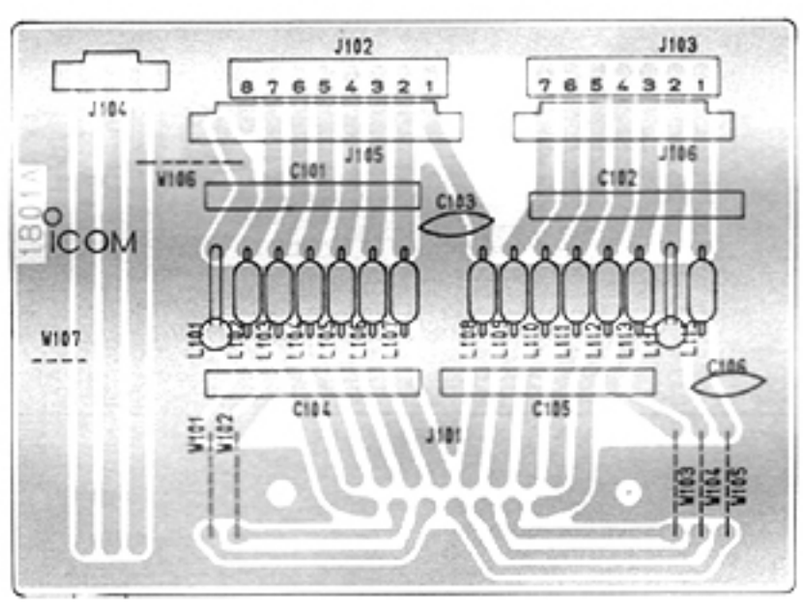

ManualsPlus.com

8-10 COMBINR UNIT

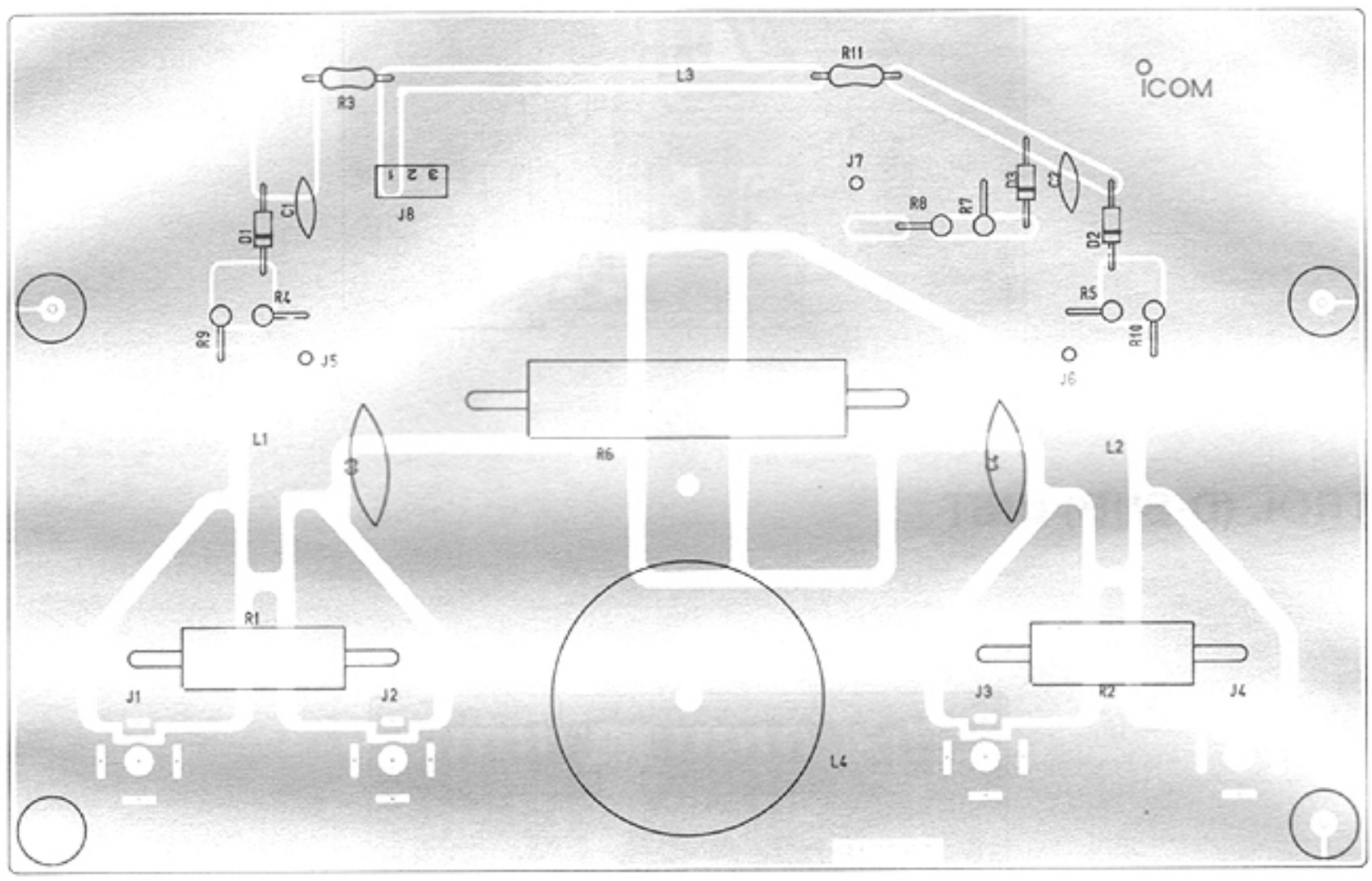

8-11 SPLITR UNIT

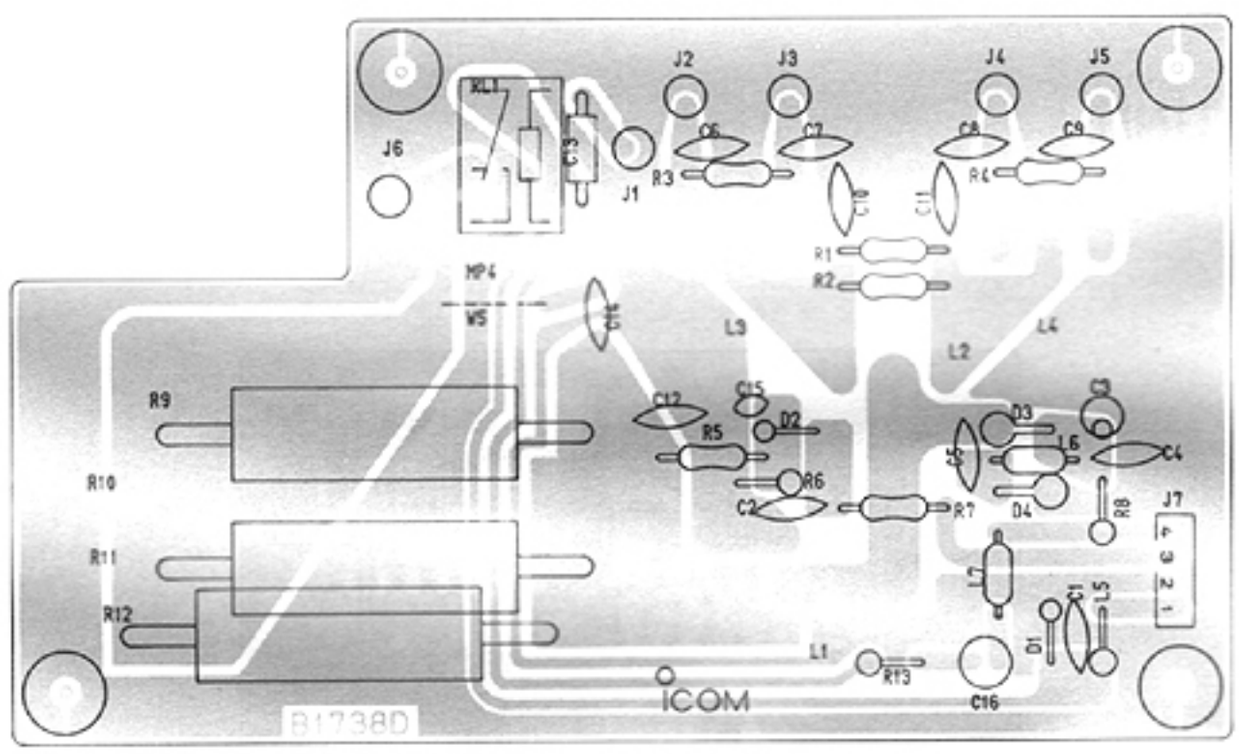

ManualsPlus.com

8-12 FILTER UNIT

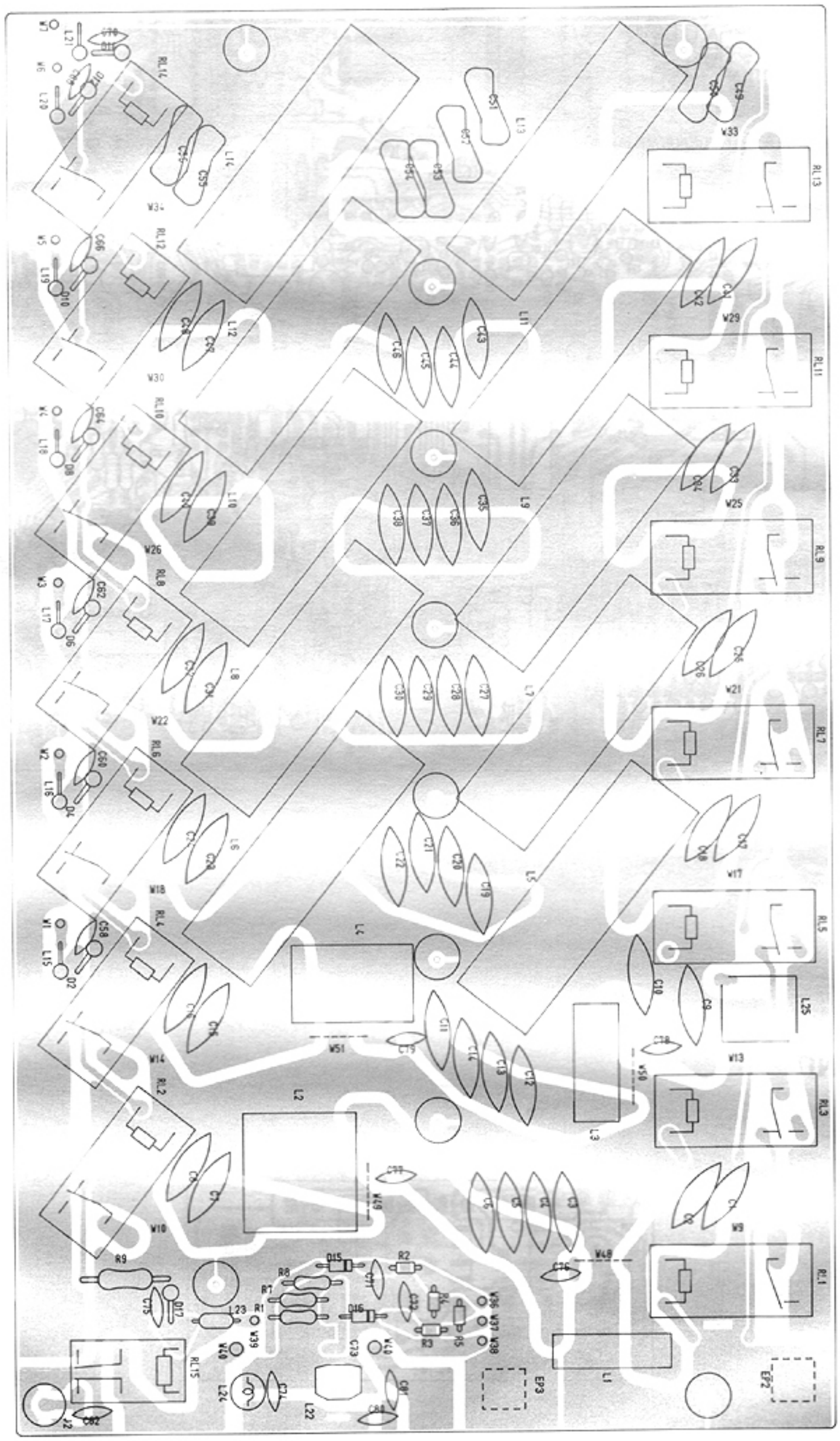

ManualsPlus.com

8-13 MAIN UNIT

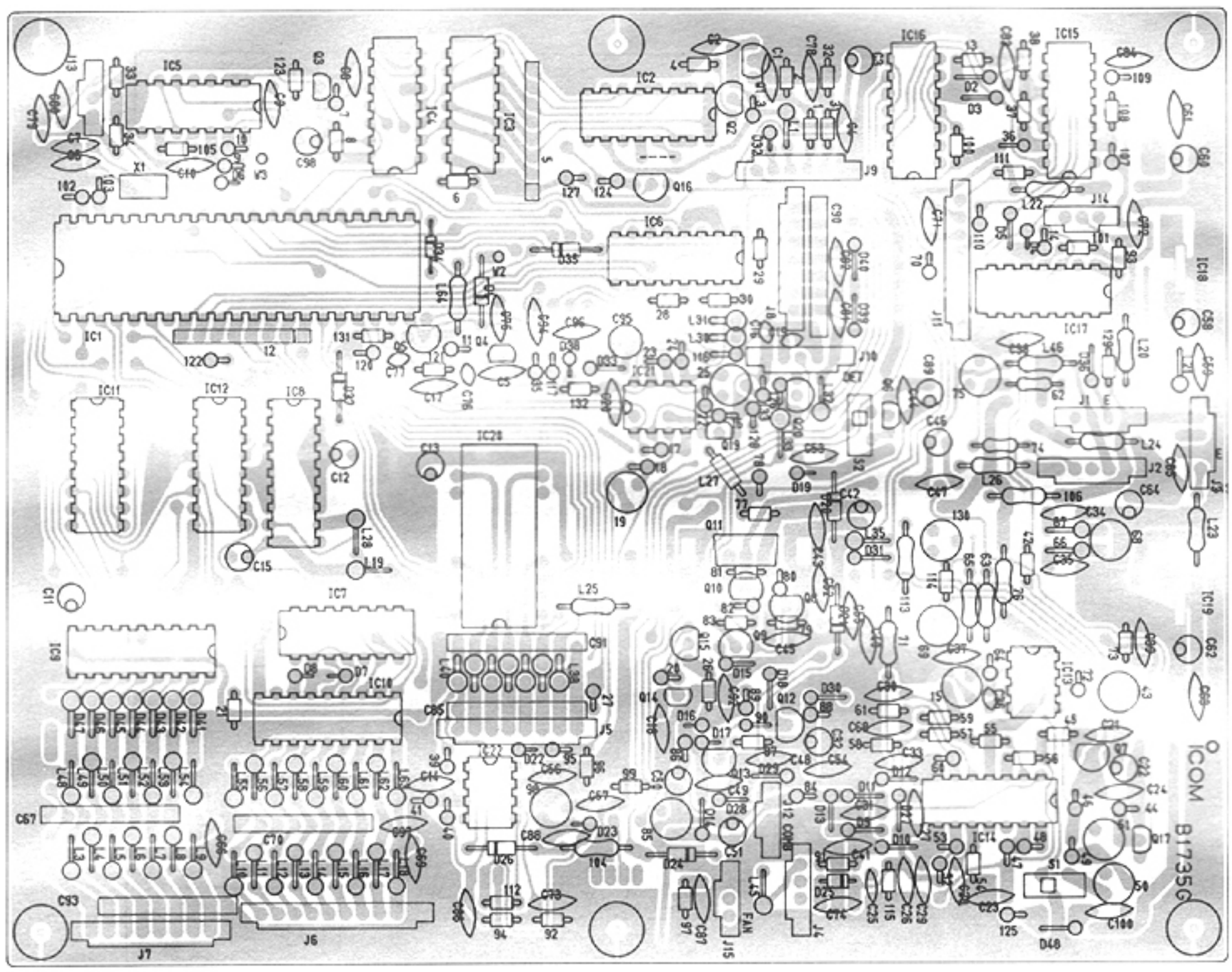

8-14 SWR UNIT

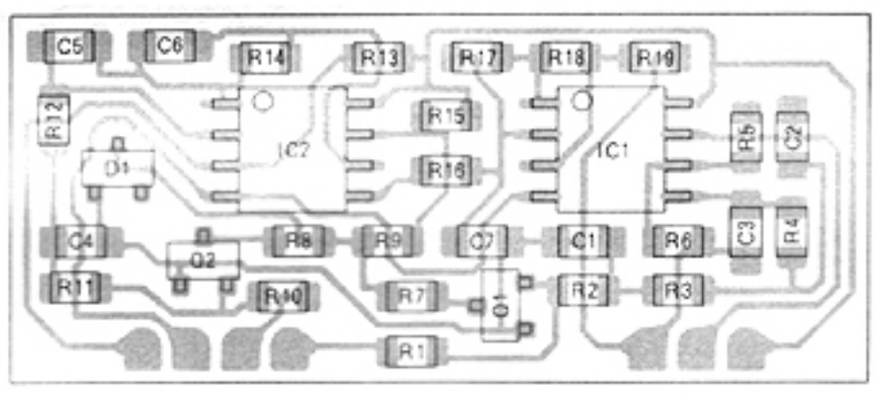

ManualsPlus.com

SECTION 9 VOLTAGE DIAGRAMS

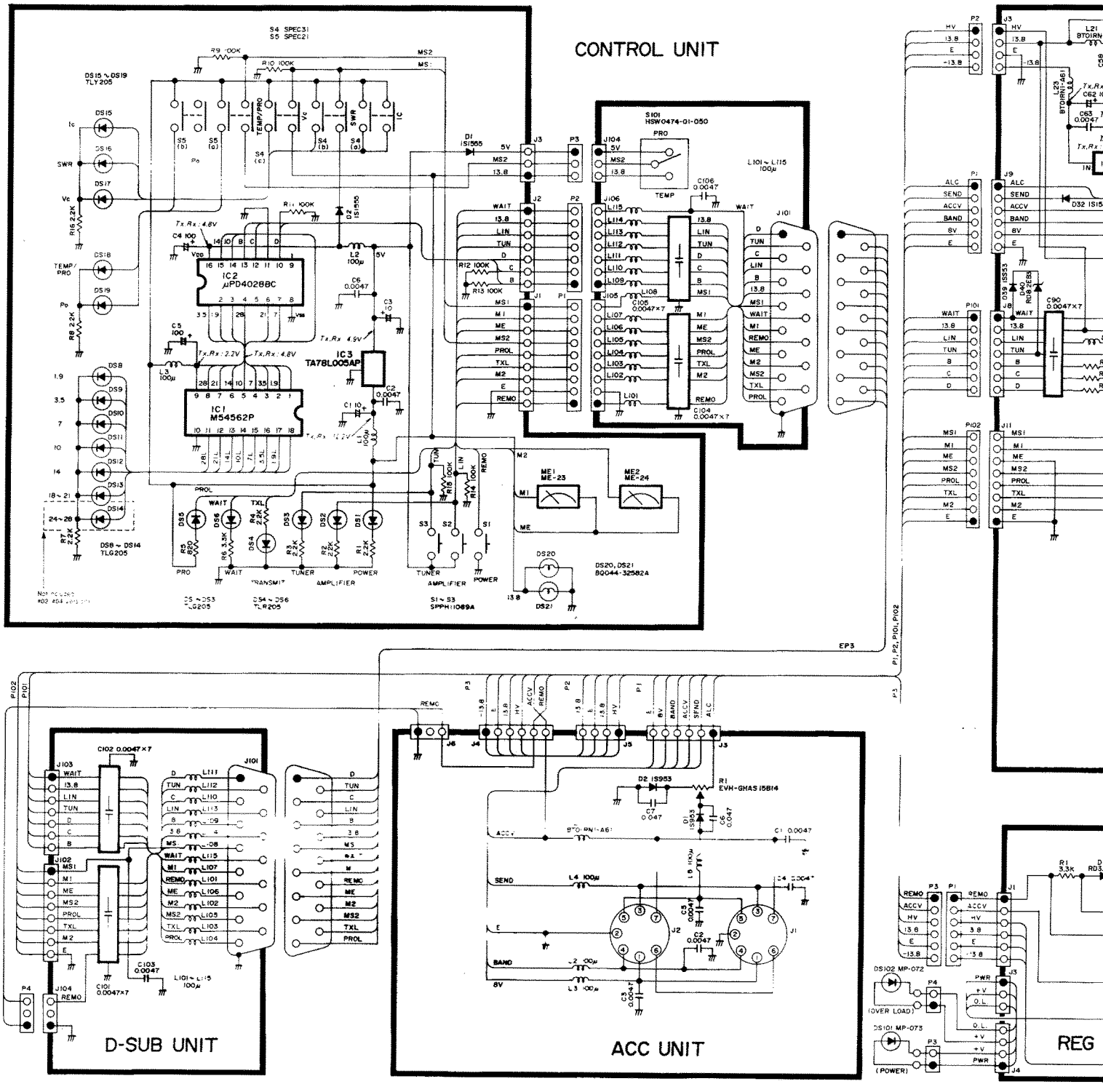

ManualsPlus.com

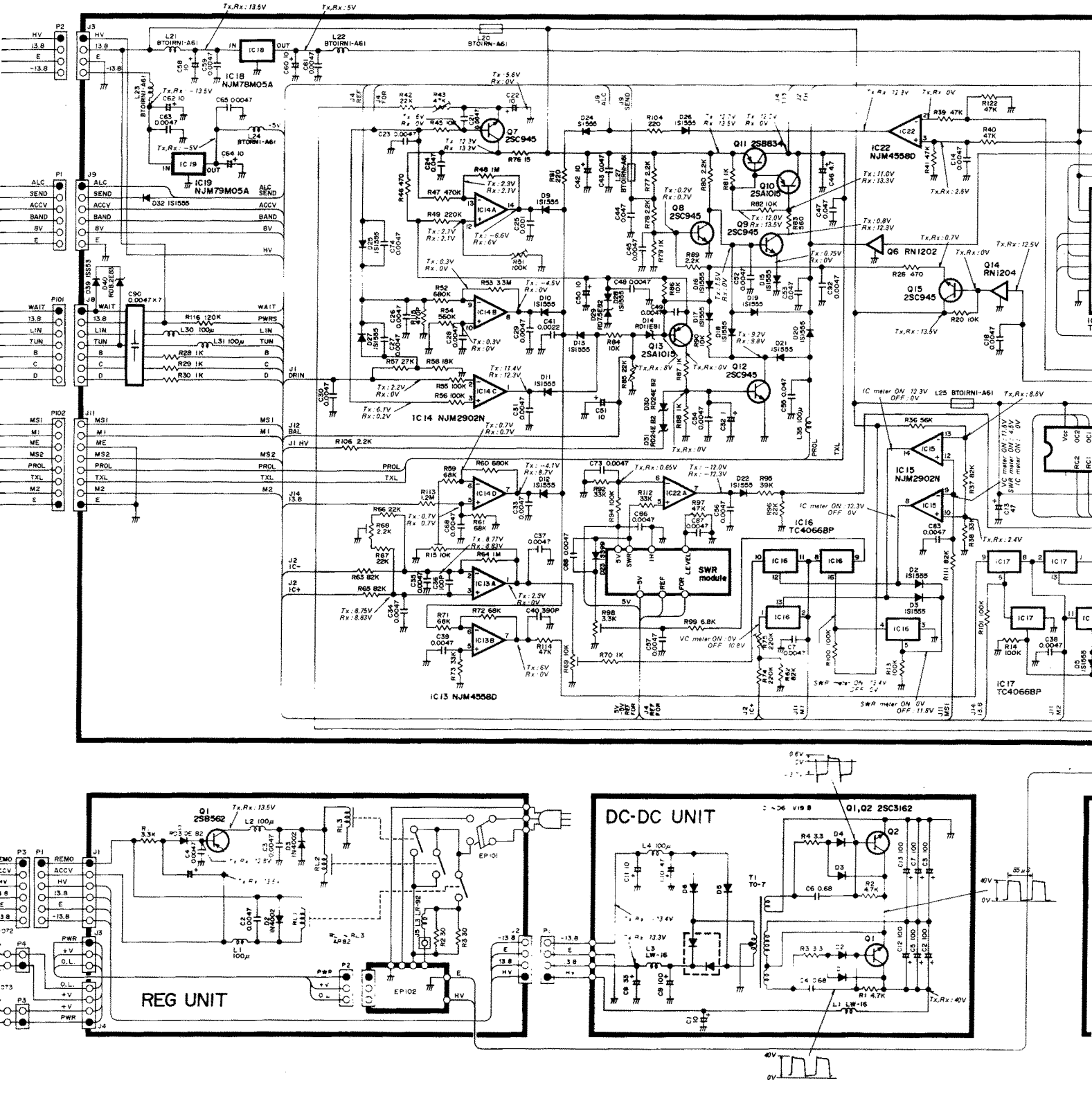

ManualsPlus.com

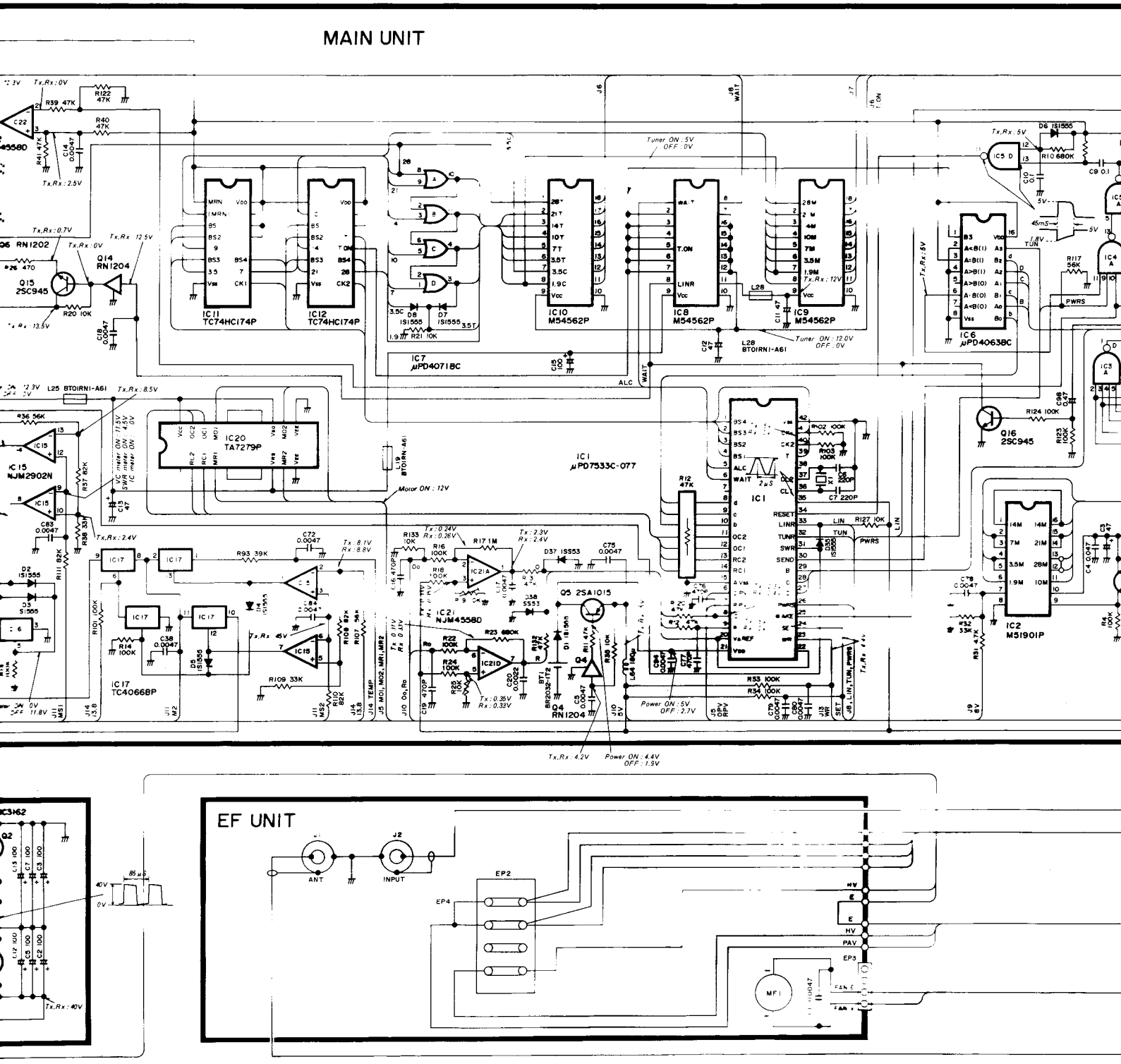

ManualsPlus.com

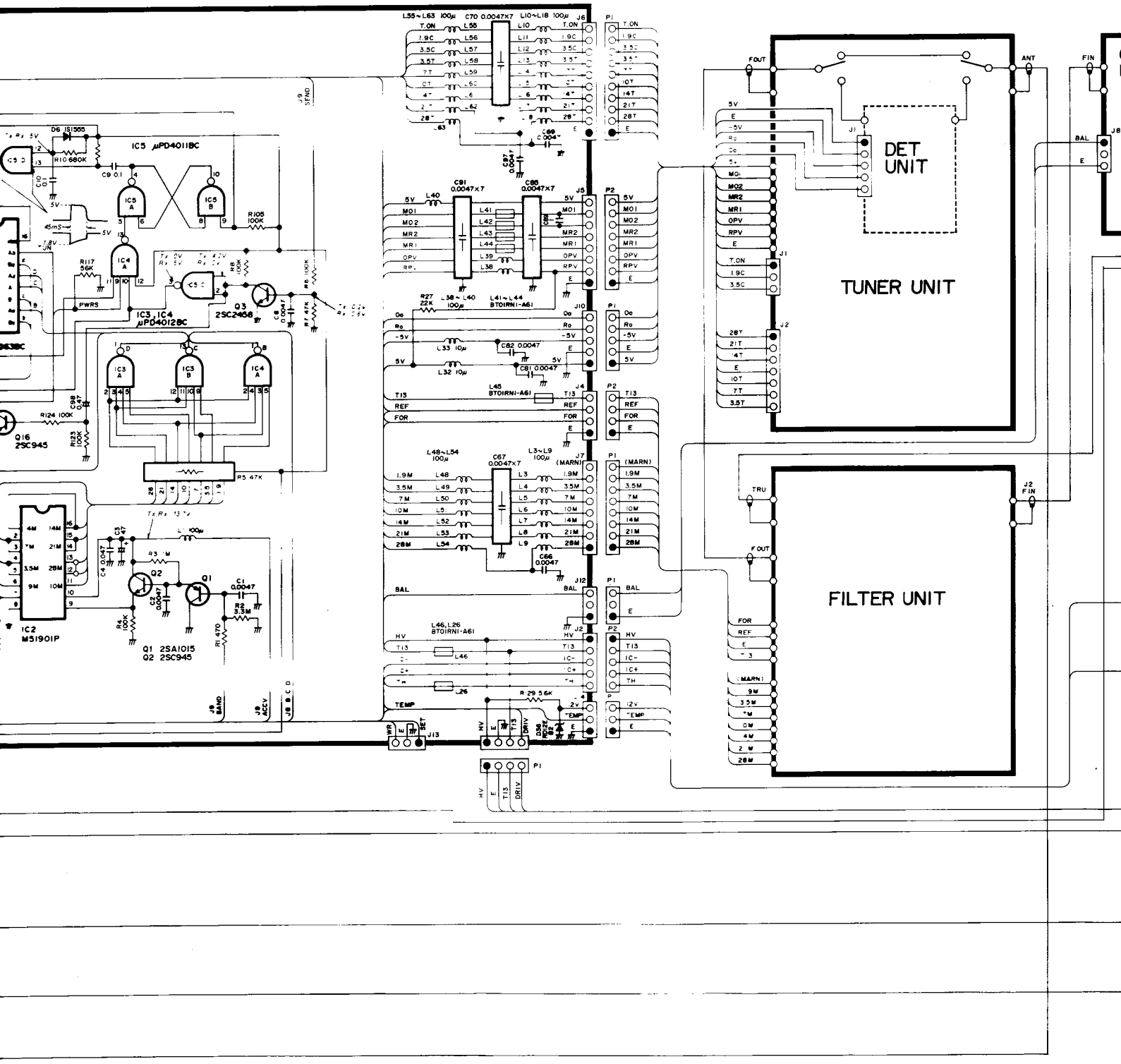

ManualsPlus.com

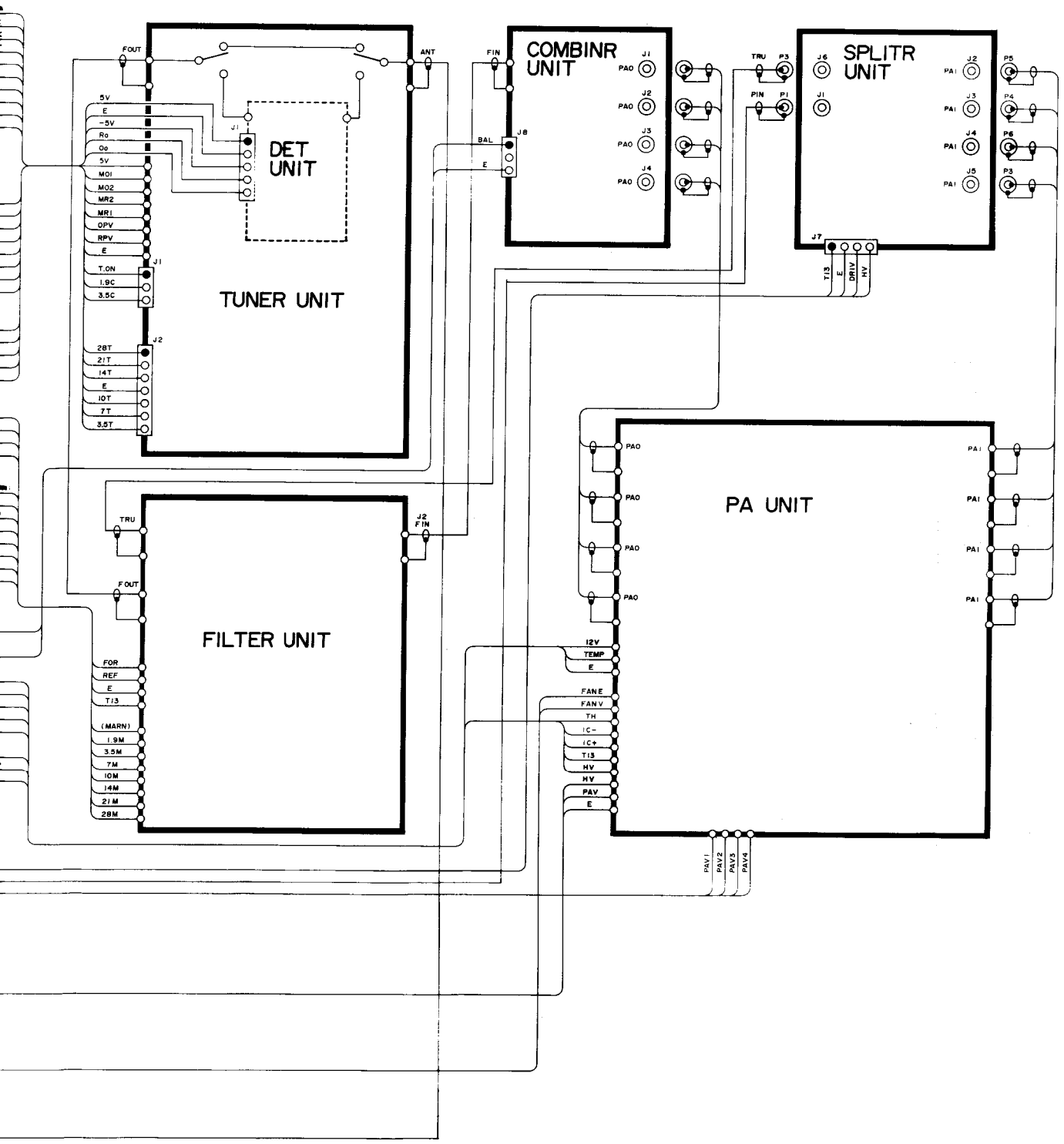

ManualsPlus.com

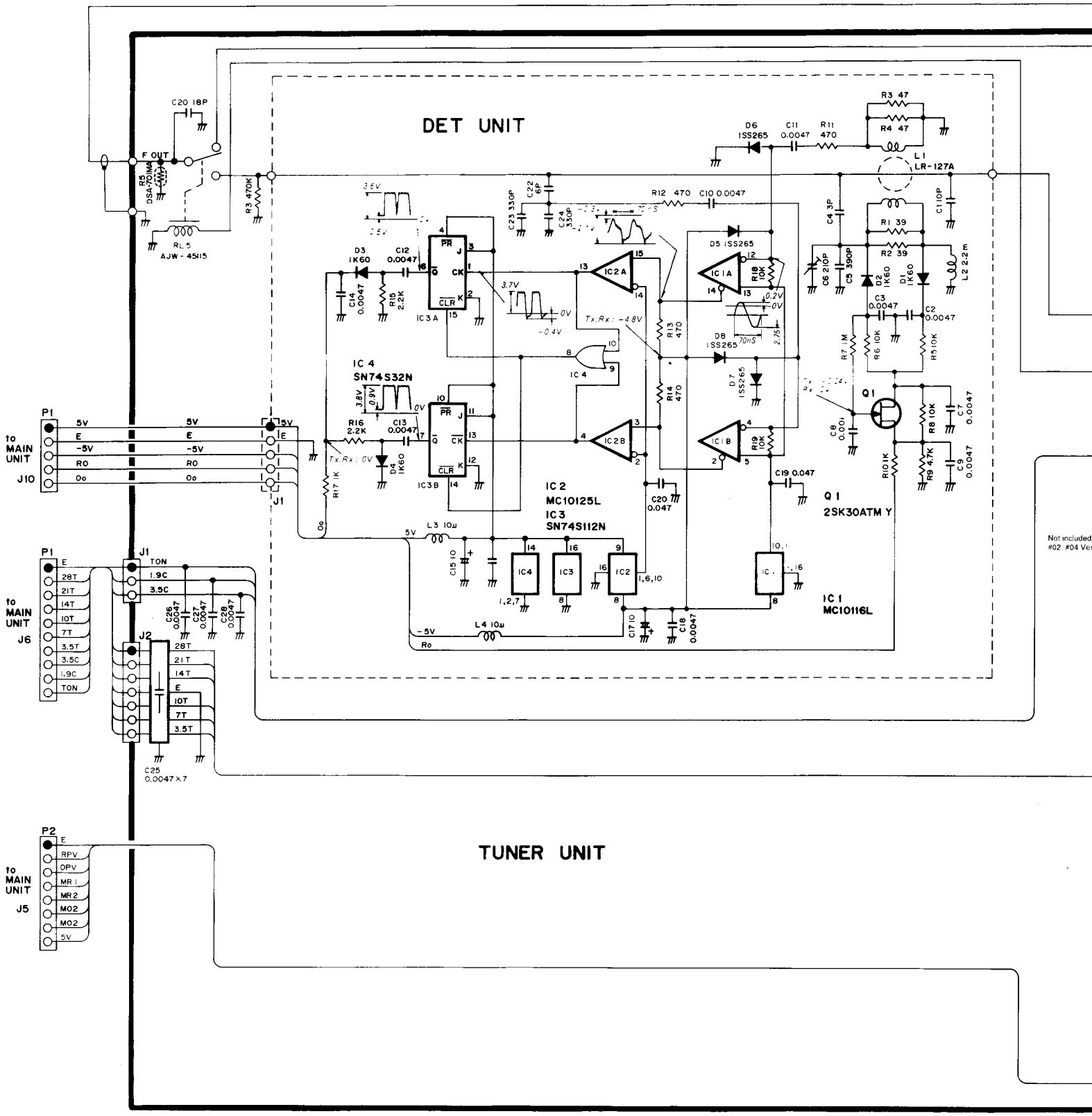

ManualsPlus.com

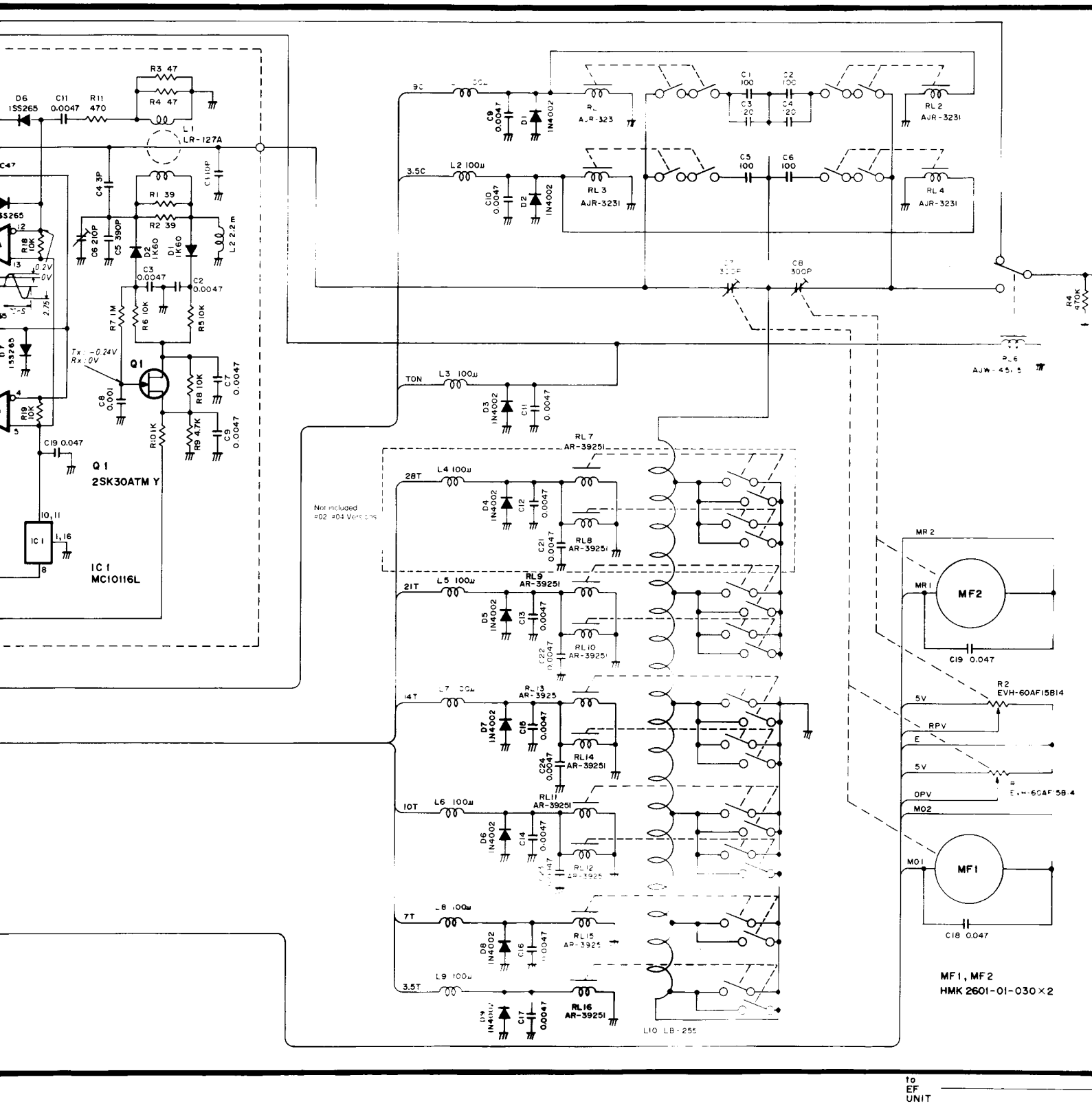

ManualsPlus.com

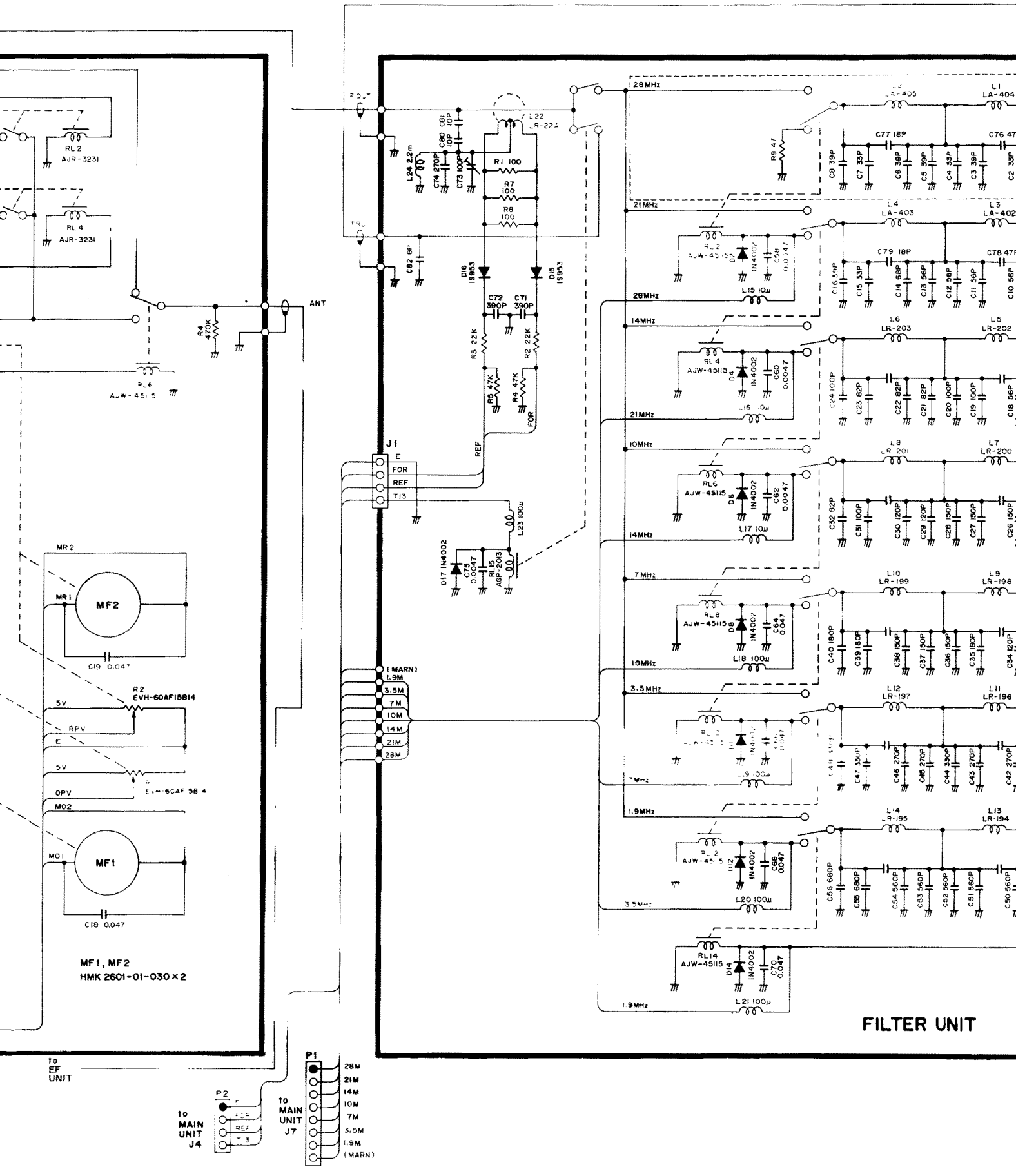

ManualsPlus.com

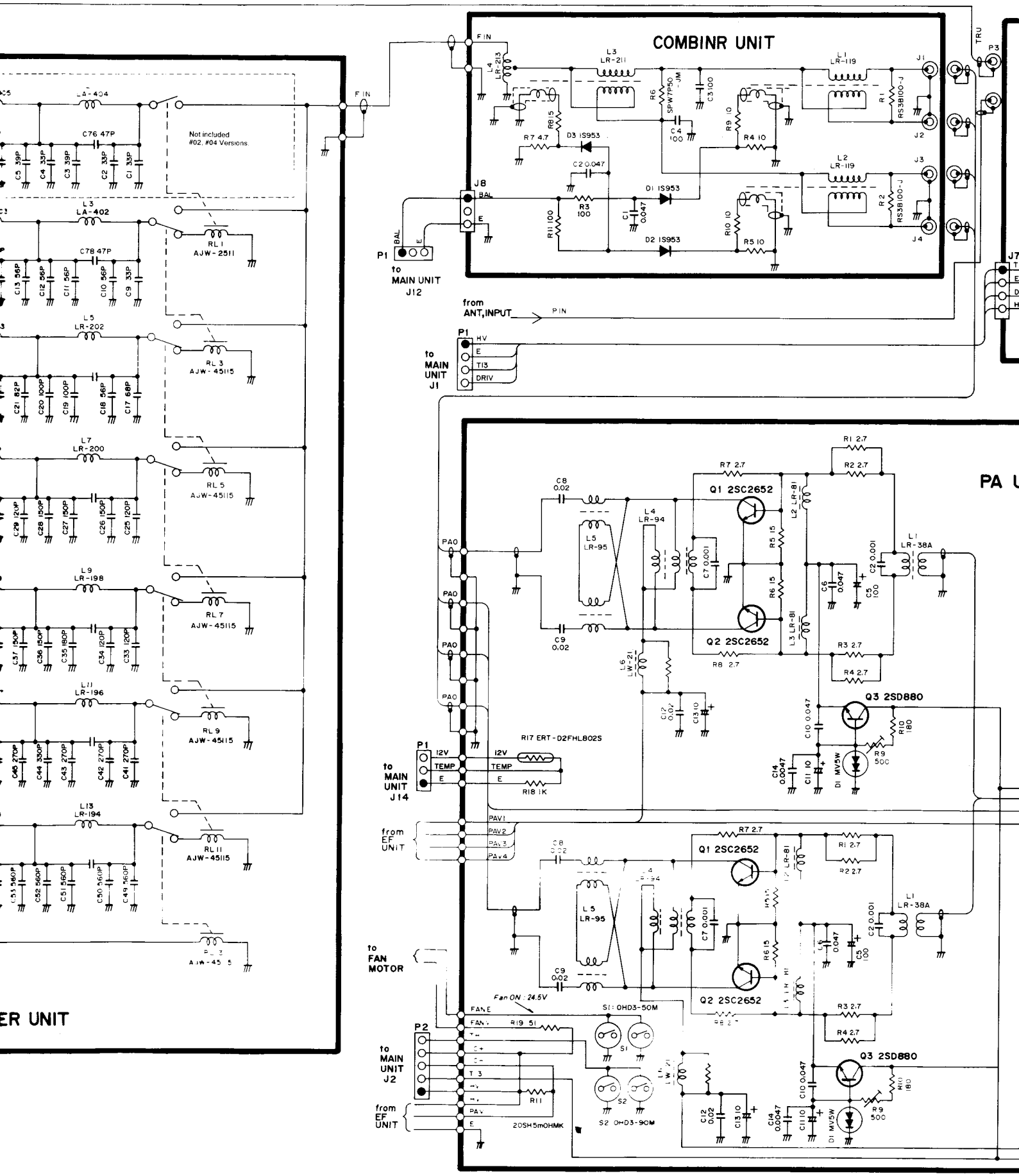

ManualsPlus.com

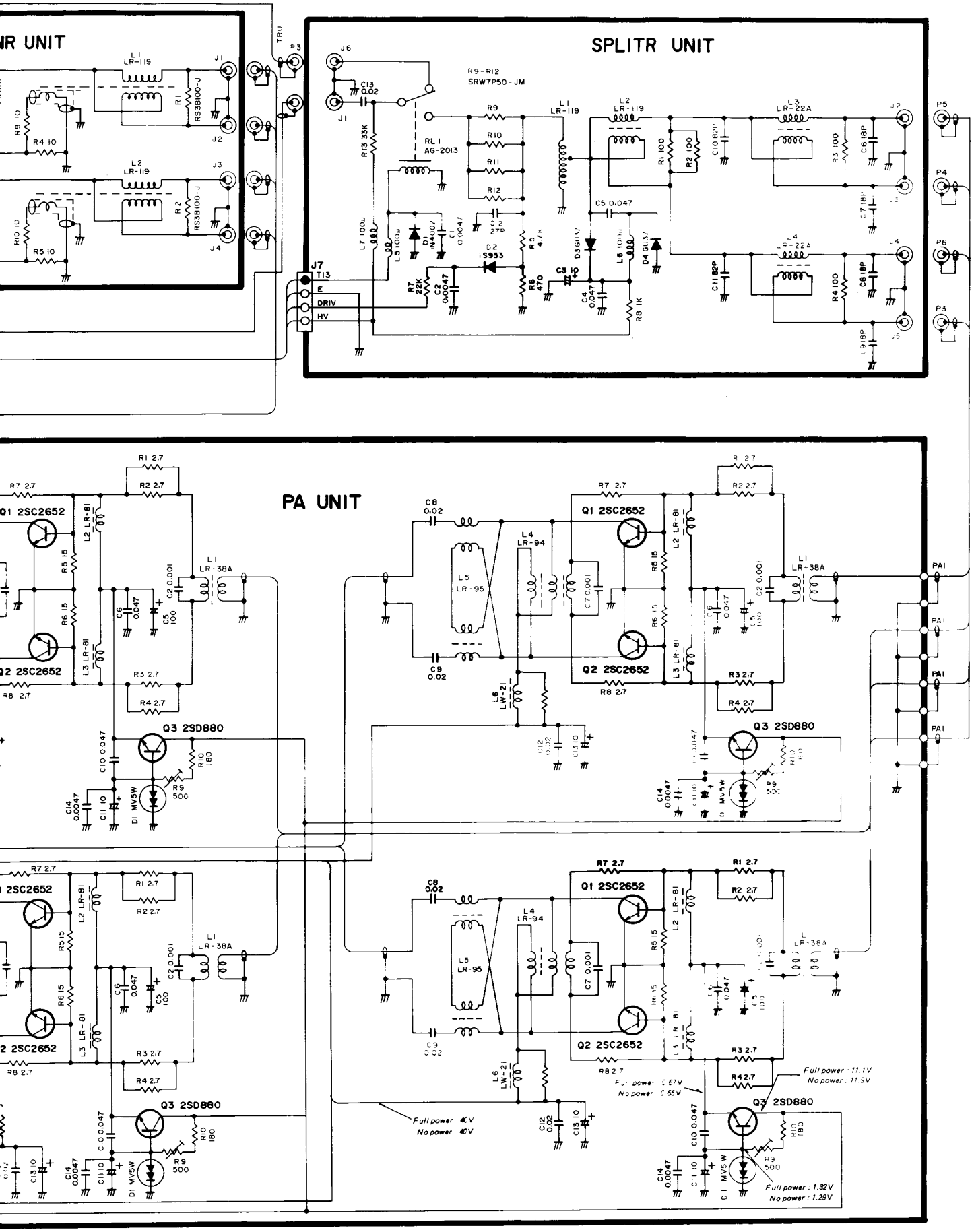

ManualsPlus.com

Icom Inc.

6-9-16, Kamihigashi, Hirano-ku, Osaka 547, Japan
Phone: 06 793 5301
Fax : 06 793 0013
Telex : 05277822 ICOMTR J

Icom America Inc.

<Corporate Headquarters>
2380 116th Avenue N.E., Bellevue, WA 98004, U.S.A.
Phone : (206) 454-8155
Fax : (206) 454-1509
Telex : 152210 ICOM AMER BVUE

<Customer Service>
Phone : (206) 454-7619

<Regional Customer Service Centers>
3150 Premier Drive, Suite 126, Irving, TX 75063, U.S.A.
Phone : (214) 550-7525
Fax : (214) 550-7423

1777 Phoenix Parkway, Suite 201, Atlanta, GA 30349, U.S.A.
Phone : (404) 991-6166
Fax : (404) 991-6327

Icom Canada

A Division of Icom America Inc.
3071 #5 Road, Unit 9, Richmond, B.C., V6X 2T4, Canada
Phone : (604) 273-7400
Fax : (604) 273-1900

Icom (Europe) GmbH

Communication Equipment
Himmelgeister Str. 100, 4000 Düsseldorf 1, W. Germany
Phone : 0211 346047
Fax : 0211 333639
Telex : 8588082 ICOM D

Icom (Australia) Pty. Ltd.

Incorporated In Victoria
7 Duke Street, Windsor, Victoria, 3181, Australia
Phone : 03 529 7582
Fax : 03 529 8485
Telex : AA 35521 ICOM AS

Icom (UK) Ltd.

Unit 9, Sea St., Herne Bay, Kent, U.K.
Phone : 0227 363859
Fax : 0227 360155
Telex : 965179 ICOM G

Icom France S.a

120 Route de Revel, BP4063, 31029 Toulouse Cedex, France
Phone : 61. 20. 31. 49
Fax : 61. 34. 05. 91
Telex : 521515 ICOM FRA

Count on us!

ManualsPlus.com

Icom Inc.
6-9-16, Kamihigashi, Hirano-ku, Osaka 547. Japan

A-5057Y-S
Printed in Japan
Copyright © 1991 by Icom Inc.