ManualsPlus.com

ICOM

SERVICE MANUAL

HF ALL BAND TRANSCEIVER

IC-775DSP
IC-775

Icom Inc.

ManualsPlus.com

INTRODUCTION

This service manual describes the latest service information for the **IC-775/DSP** HF ALL BAND TRANSCEIVER at the time of publication.
5 versions of the **IC-775DSP** and 5 versions of the **IC-775** have been designed. This service manual covers each version.

MODEL	VERSION NO.	VERSION	SYMBOL
IC-775DSP	#02	Other	OTH
	#03	Spain	ESP
	#04	France	FRA
	#05	Germany	FRG
	#07	Europe	EUR
IC-775	#12	Other	OTH-1
	#13	Spain	ESP-1
	#14	France	FRA-1
	#15	Germany	FRG-1
	#17	Europe	EUR-1

To upgrade quality, any electrical or mechanical parts and internal circuits are subject to change without notice or obligation.

DANGER

Use **ONLY** the specified AC voltage described on the AC power socket. Other voltage may cause the transceiver damage or personal injury.

DO NOT touch the REG unit after the transceiver is connected to an AC outlet. An insulated tool must be used at all time.

DO NOT expose the transceiver to rain, snow or any liquids.

DO NOT apply an RF signal of more than 20 dBm (100 mW) to the antenna connector. This could damage the transceiver's front end.

Danger of explosion if a lithium battery is incorrectly replaced. Replace only with the same or equivalent type recommended by the battery manufacturer.
Dispose of used batteries according to the manufacturer's instructions.

Explosionsqefahr bei unsachgemäßen Austaush der Batterie. Ersatz nur durch denselben oder einen vom Hersteller empfohlenen ähnlichen Typ. Entsorgung gebrauchter Batterein mach Angaben des Herstellers.

ORDERING PARTS

Be sure to include the following four points when ordering replacement parts:

1. 10-digit order numbers
2. Component part number and name
3. Equipment model name and unit name
4. Quantity required

<SAMPLE ORDER>

1110003140	S.IC	NJM4558M(T1)	IC-775	MAIN UNIT	5 pieces
8810004620	Screw	PH M4 x 8 ZK	IC-775	Top cover	10 pieces

Addresses are provided on the inside back cover for your convenience.

REPAIR NOTES

1. Make sure a problem is internal before disassembling the transceiver.
2. **DO NOT** open the transceiver until the transceiver is disconnected from its power source.
3. **DO NOT** force any of the variable components. Turn them slowly and smoothly.
4. **DO NOT** short any circuits or electronic parts. An insulated tuning tool **MUST** be used for all adjustments.
5. **DO NOT** keep power ON for a long time when the transceiver is defective.
6. **DO NOT** transmit power into a signal generator or a sweep generator.
7. **ALWAYS** connect a 50 dB to 60 dB attenuator between the transceiver and a deviation meter or spectrum analyzer when using such test equipment.
8. **READ** the instructions of test equipment thoroughly before connecting equipment to the transceiver.

ManualsPlus.com

TABLE OF CONTENTS

SECTION 1 SPECIFICATIONS ..... **1 - 1**

SECTION 2 DISASSEMBLY AND OPTION INSTALLATIONS ..... **2 - 1 to 5**
2 - 1 DISASSEMBLY INSTRUCTIONS ..... 2 - 1
2 - 2 OPTION INSTALLATIONS ..... 2 - 2

SECTION 3 INSIDE VIEWS ..... **3 - 1 to 2**

SECTION 4 CIRCUIT DESCRIPTION ..... **4 - 1 to 13**
4 - 1 RECEIVER CIRCUITS ..... 4 - 1
4 - 2 TRANSMITTER CIRCUITS ..... 4 - 5
4 - 3 PLL CIRCUITS ..... 4 - 8
4 - 4 ANTENNA TUNER CIRCUITS ..... 4 - 9
4 - 5 LOGIC CIRCUITS ..... 4 - 11
4 - 6 DSP CIRCUITS ..... 4 - 13

SECTION 5 ADJUSTMENT PROCEDURES ..... **5 - 1 to 14**
5 - 1 PREPARATION BEFORE SERVICING ..... 5 - 1
5 - 2 PLL ADJUSTMENT ..... 5 - 2
5 - 3 RECEIVER ADJUSTMENT ..... 5 - 4
5 - 4 TRANSMITTER ADJUSTMENT ..... 5 - 8
5 - 5 TUNER UNIT ADJUSTMENT ..... 5 - 14

SECTION 6 PARTS LIST ..... **6 - 1 to 35**

SECTION 7 MECHANICAL PARTS ..... **7 - 1 to 7**

SECTION 8 SEMI-CONDUCTOR INFORMATION ..... **8 - 1**

SECTION 9 BOARD LAYOUTS ..... **9 - 1 to 13**
9 - 1 DSP UNIT (IC-775DSP only) ..... 9 - 1
9 - 2 SW-A UNIT ..... 9 - 2
9 - 3 SW-B AND DISPLAY UNITS ..... 9 - 4
9 - 4 VR-A UNIT ..... 9 - 5
9 - 5 MAIN UNIT ..... 9 - 6
9 - 6 RF UNIT ..... 9 - 7
9 - 7 IF UNIT ..... 9 - 8
9 - 8 PLL UNIT ..... 9 - 9
9 - 9 PA UNIT ..... 9 - 10
9 - 10 FILTER UNIT ..... 9 - 11
9 - 11 CTRL UNIT ..... 9 - 12
9 - 12 RELAY UNIT ..... 9 - 13

SECTION 10 VOLTAGE DIAGRAM / BLOCK DIAGRAM ..... **10 - 1 to 6**

ManualsPlus.com

SECTION 1 SPECIFICATIONS

GENERAL

- Frequency coverage:
  - Receive: 100 kHz – 29.990 MHz
  - Transmit: 1.800 – 1.999999 MHz*1
    3.500 – 3.999999 MHz*2
    7.000 – 7.300 MHz*3
    10.100 – 10.150 MHz
    14.000 – 14.350 MHz
    18.068 – 18.168 MHz
    21.000 – 21.450 MHz
    24.890 – 24.990 MHz
    28.000 – 29.700 MHz
    *1 1.830–1.850 for Spain version; 1.810–1.850 for France version; 1.815–1.835/1.850–1.890 for Germany version
    *2 3.500–3.800 for Spain, France and Germany versions
    *3 7.000–7.100 for Spain, France and Germany versions
- Mode : SSB, CW, RTTY, AM, FM
- Number of memory channels : 101 (99 regular, 2 scan edges)
- Antenna impedance : 50 Ω nominal
- Usable temperature range : – 10 ℃ to + 60 ℃; + 14 ℉ to + 140 ℉
- Frequency stability : Less than ± 200 Hz from 1 min. to 60 min. after power ON. After that, rate of stability change is less than ± 30 Hz/hr. at + 25 ℃; + 77 ℉. Temperature fluctuations (0 ℃ to + 50 ℃; + 32 ℉ to + 122 ℉) less than ± 350 Hz.
- Power supply requirement:
  - 120 V type: 100 – 120 V AC
  - 230 V type: 220 – 240 V AC
- Power consumption :

Transmit	max. power	760 VA
Receive	squelched	140 VA
	max. audio output	150 VA

- Dimensions : 424(W) × 150(H) × 390(D) mm
  16 11/16(W) × 5 29/32(H) × 15 11/32(D)″
  (projections not included)
- Weight : 16.5 kg; 36.4 lb (without DSP unit)
  16.7 kg; 36.8 lb (with DSP unit)

TRANSMITTER

- Output power : SSB, CW, RTTY, FM 5 – 200 W
  AM 5 – 50 W
  (continuously adjustable)
- Spurious emissions : Less than – 60 dB
- Carrier suppression : More than 40 dB
- Unwanted sideband : More than 55 dB
- Microphone impedance : 600 Ω

RECEIVER

- Receive system :
  - SSB, CW, RTTY, AM: Quadruple-conversion superheterodyne
  - FM: Triple-conversion superheterodyne
- Intermediate frequencies: (Unit: MHz)

MODE	SSB	CW, RTTY	AM	FM
1st	69.0115	69.0106	69.0100	69.0100
2nd	9.0115	9.0106	9.0100	9.0100
3rd	0.455	0.455	0.455	0.455
4th	10.6950	10.6950	10.6950	–

- Sensitivity (Preamp 1 ON):

SSB, CW, RTTY (10 dB S/N)	100 – 500 kHz	Less than 2.0 µV
	1.8 – 29.99 MHz	Less than 0.16 µV
AM (10 dB S/N)	0.5 – 1.8 MHz	Less than 13.0 µV
	1.8 – 29.99 MHz	Less than 2.0 µV
FM (12 dB SINAD)	28 – 29.99 MHz	Less than 0.5 µV

- Squelch sensitivity (Preamp 1 ON):
  - SSB, CW, RTTY, AM: Less than 3.2 µV at threshold
  - FM: Less than 0.32 µV at threshold
- Selectivity (Normal filter selection):

SSB	More than 2.4 kHz/ – 6 dB
	Less than 4.0 kHz/ – 60 dB
CW, RTTY	More than 500 Hz/ – 6 dB
	Less than 1.0 kHz/ – 60 dB
AM	More than 6.0 kHz/ – 6 dB
	Less than 20.0 kHz/ – 60 dB
FM	More than 15.0 kHz/ – 6 dB
	Less than 30.0 kHz/ – 60 dB

- Spurious and image rejection ratio : More than 70 dB
- Audio output power : More than 2.6 W at 10% distortion with an 8 Ω load
- RIT/⊿TX variable range : ± 9.999 kHz

ANTENNA TUNER

- Matching impedance range: 16.7 – 150 Ω unbalanced (Less than VSWR 3:1)
- Minimum operating input power : 8 W
- Tuning accuracy : VSWR 1.5:1 or less
- Insertion loss (after tuning) : Less than 1.0 dB

All stated specifications are subject to change without notice or obligation.

ManualsPlus.com

SECTION 2 DISASSEMBLY AND OPTION INSTALLATIONS

2-1 DISASSEMBLY INSTRUCTIONS

• TOP AND BOTTOM COVERS

① Remove 6 screws from the transceiver's top and 4 screws from the sides, then remove the top cover.
② Turn the transceiver upside down.
③ Remove 8 screws from the bottom cover, then remove the bottom cover.

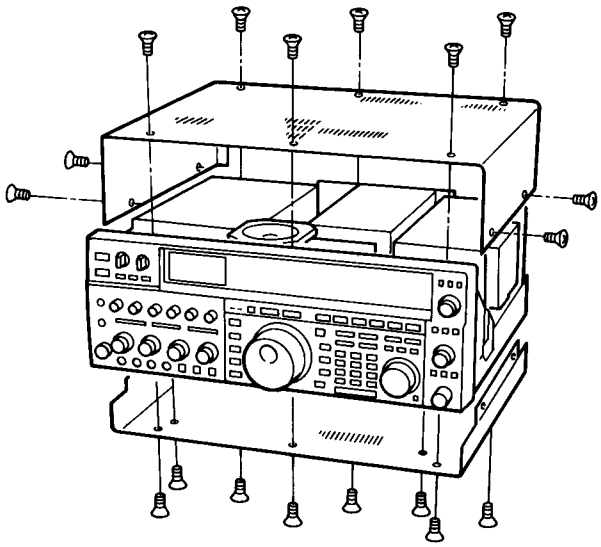

• PA UNIT

① Disconnect the plug (P1) from J8 on the RF unit (bottom side).
② Disconnect the plug (W1) and flat cables (W4, W7) from the TUNER unit.
③ Remove 2 screws [e] and 1 screw [f] to remove the PA unit.

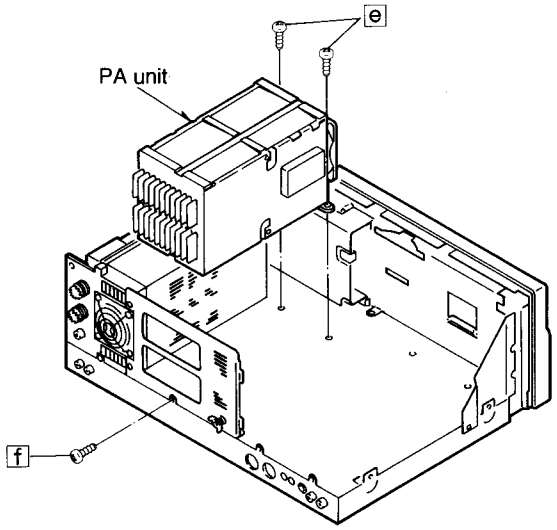

• REG UNIT

① Remove 2 screws [a] to remove the speaker.
② Remove 2 screws [b], 2 screws [c] and 2 screws [d].
③ Push the position "A" and pull the position "B" to release 2 hooks.
④ Disconnect 2 connectors from the REG unit's front and 1 connector (cable from the REG unit) from the front block, then remove the REG unit.

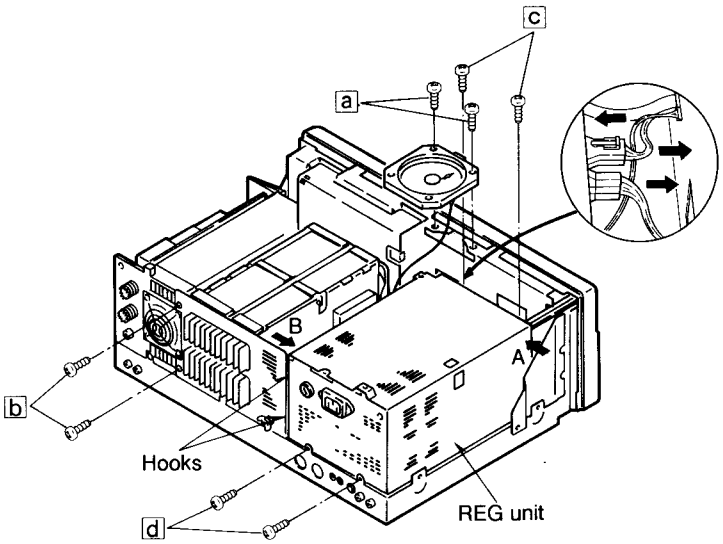

• TUNER UNIT

① Disconnect the connector (P1) from J24 on the IF unit (bottom side).
② Remove 1 screw [g] and 1 screw [h] to remove the TUNER unit.

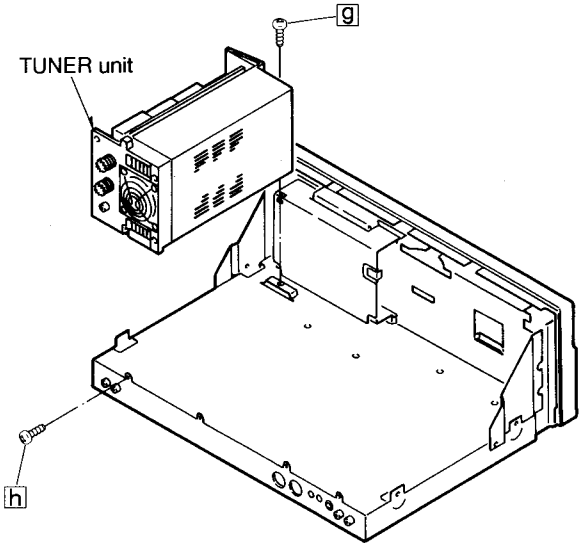

ManualsPlus.com

• FRONT BLOCK

① Remove 3 screws [i].
② Remove 2 screws [j] and 2 screws [k], then remove the right and left angles.
③ Separate the front block and main chassis.

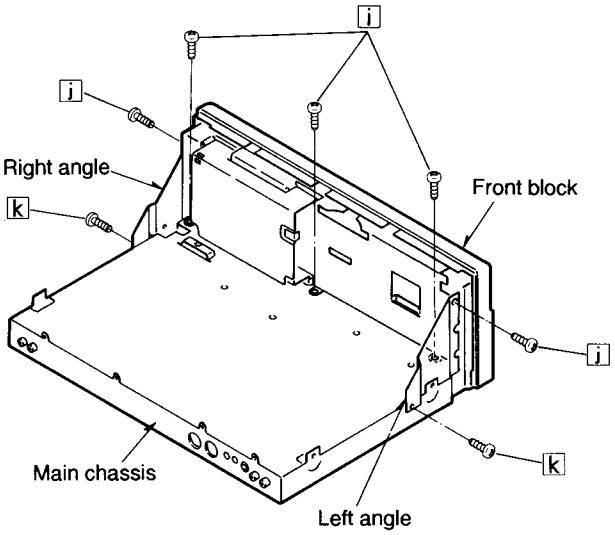

2-2 OPTION INSTALLATIONS

• UI-100 DSP UNIT

The UI-100 DSP UNIT provides noise reduction, DSP modulation/demodulation, DSP filters, auto notch, auto APF, etc. for the IC-775. The IC-775DSP has a DSP unit as standard.

Install the DSP unit as follows:

① Remove the top cover as described on p. 2-1.
② Connect the 3 plugs (attached to the backside of the front panel) to the appropriate connectors as shown below.

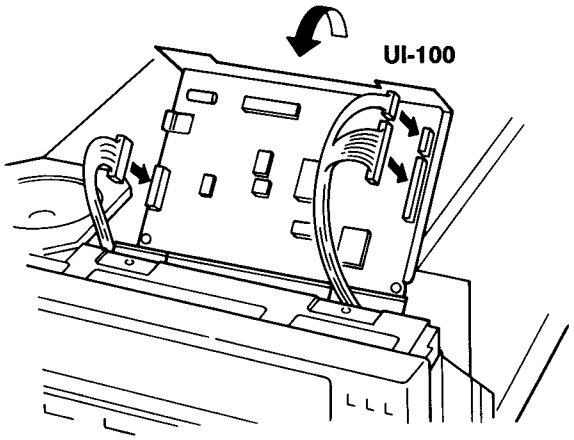

③ Insert the DSP unit into the slots at the backside of the main and sub dials.
④ Tighten the 2 supplied screws as shown below.
⑤ Replace the top cover.

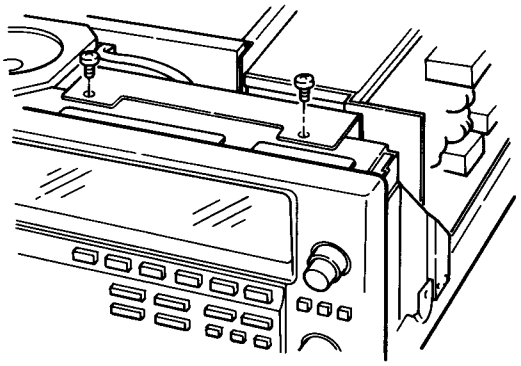

After installation, read the instruction manual as for a "DSP-equipped type" transceiver. The [AF LPF] switch functions as the auto notch switch in SSB mode and the auto APF switch in CW mode.

ManualsPlus.com

• OPTIONAL FILTER

After installing optional filters, the transceiver has 3* kinds of selectivity for 2nd and 3rd IF filters to provide better S/N (signal-to-noise ratio), or to reject nearby interference.
* FM mode: 2 kinds of selectivity

Following optional filters are available.

IF	Filter	Passband width	Used selectivity
2nd	FL-101	250 Hz/ – 6 dB	CW nar.
	FL-102	6.0 kHz/ – 6 dB	SSB wide, AM med., FM nar.
	FL-223	1.9 kHz/ – 6 dB	SSB nar.
3rd	FL-53A	250 Hz/ – 6 dB	CW nar.
	FL-222	1.9 kHz/ – 6 dB	SSB nar.

When only 1 filter is installed for selectivity, such as a FL-101 installed but no FL-53A installed, optimum performance cannot be obtained for the selectivity and the twin PBT function does not operate correctly. Both filters, such as FL-101 and FL-53A, should be installed.

FILTER SELECTION
After the filter(s) are installed, activate the optional filter(s) in H-set mode. If this is not correctly set, the installed filter(s) cannot be selected.

① Remove the top and bottom covers as described on p. 2-1.
② Insert the filter(s) to the proper position. The locations are shown in the figures below.
- The FL-53A and FL-222 must be installed in the proper direction.
- The FL-101, FL-102 or FL-223 work regardless of the direction they are installed in.

③ Replace the top and bottom covers.

FL-102 (or FL-101, FL-223) Installation

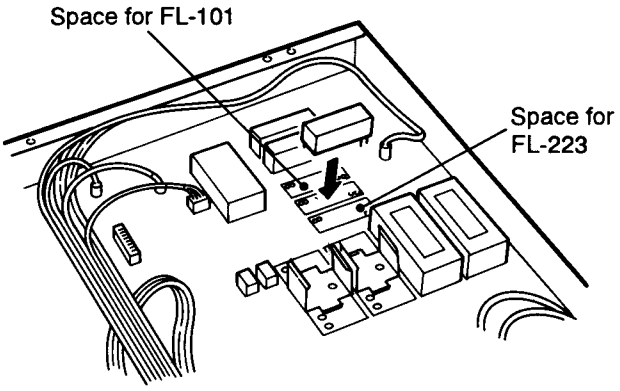

FL-222 (or FL-53A) Installation

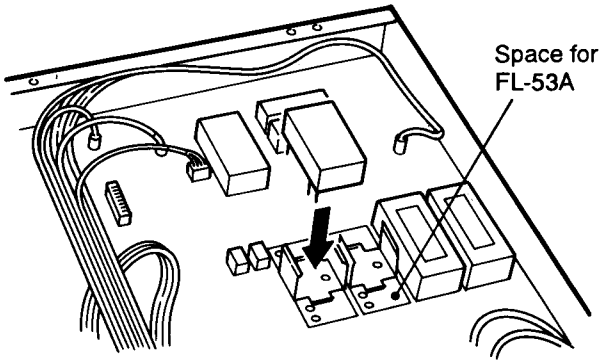

• UT-66 VOICE SYNTHESIZER UNIT

The UT-66 announces the operating frequency or selected mode in a clear, electronically-generated voice (in English or Japanese).

① Remove the top cover as described on p. 2-1.
② Plug the UT-66 into J1 on the MAIN unit (backside of the S/RF meter) as shown in the figure at right.
③ Replace the top cover.
④ Set the language and speech speed in H-set mode.

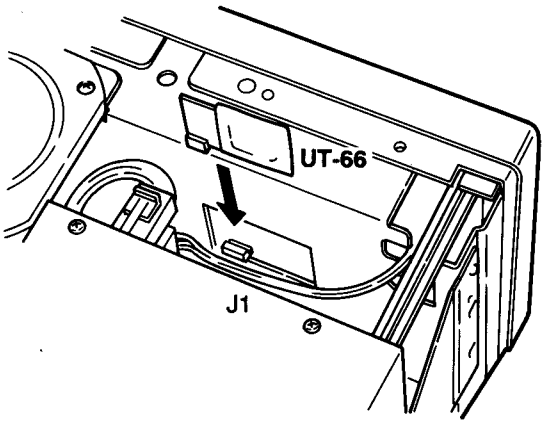

ManualsPlus.com

• CR-282 HIGH-STABILITY CRYSTAL UNIT

By replacing the original crystal unit with this unit, the total frequency stability of the transceiver will be improved.

CR-282 frequency stability:
± 0.5 ppm (−30℃ to +60℃; −22℉ to +140℉)

① Remove the top and bottom covers as described on p. 2-1.
② Remove 10 screws from the PLL unit and the ribbon cable from J11; then turn over the PLL unit to see the reverse side. (Fig. 1)
③ Unsolder the leads of the installed crystal, then remove the crystal.
- Use a desoldering braid.
④ Unsolder the 4 positions on the PLL unit where the CR-282 will be installed.
⑤ Install the CR-282 in the PLL unit, paying attention to orientation.
- Symbols on the bottom of the CR-282 must be identically matched with symbols on the P.C. board.
⑥ Bend the leads of the CR-282 at the foil side of the P.C. board and solder them as shown in figure 2 at right.
⑦ Trim the leads even with the solder points.
⑧ Replace the PLL unit, ribbon cable and covers.

After changing the crystal unit, frequency adjustment is necessary with L4 on the PLL unit.
- Refer to p. 5-2 for adjustment details.

NOTE: The CR-282 is an oven-heat-type crystal unit, and the specified frequency stability described above is guaranteed 1 min. after power ON.

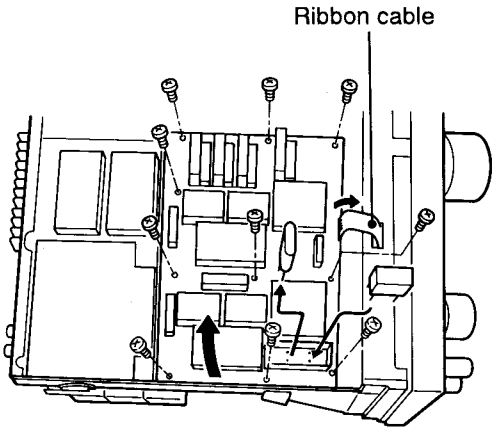

(Fig. 1)

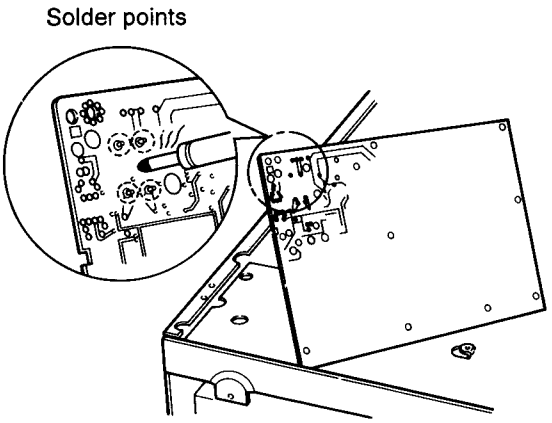

(Fig. 2)

ManualsPlus.com

• **AC VOLTAGE SELECTION**

⚠ **WARNING: DISCONNECT** the AC power cable from the transceiver and wait a few minutes before selecting an AC power voltage.

The regulator unit in the IC-775/DSP can be switched to 120 or 230 V AC.

① Remove the REG unit as described on p. 2-1.
② Remove the 16 screws to remove the internal shield cover of the regulator unit.
③ Unplug the cable as shown in the diagram below, then connect it to the desired voltage position.

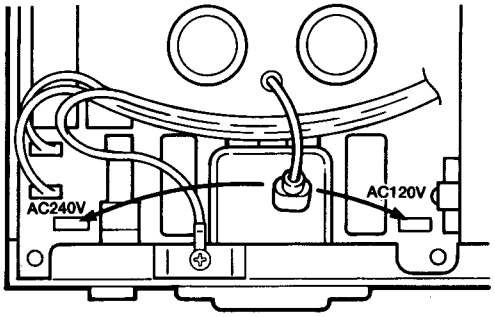

④ Change the AC fuse to an appropriate one.
⑤ Replace the internal shield cover and plug in the 3 power connectors. Replace the regulator unit, then check the movement of the [POWER] switch. Replace the remaining units, covers and screws.

⚠ **WARNING: DO NOT** forget to change the AC fuse when you change the AC input voltage. An incorrect fuse may pose a fire hazard.
- 12 A FGMB fuse for 100–120 V versions
- 5 A high breaking capacity fuse for 220–240 V versions

• **BACKUP BATTERY REPLACEMENT**

The transceiver has a lithium backup battery on the inside of the front panel (MAIN unit) for retaining operating conditions. The usual life of the backup battery is approximately 5 years.

When the backup battery is exhausted, the transceiver transmits and receives normally but cannot retain operating conditions except for memory channels.

CAUTION: If the lithium battery is incorrectly replaced, it could explode. Replace with a CR-2032 or equivalent type.

① Remove the top and bottom covers as described on p. 2-1.
② Remove 8 screws from the front panel as shown in figure 1 at right.
③ Remove the front panel.
④ Replace the backup battery as shown in figure 2 at right.
⑤ Reassemble the front panel.
- Check that the [POWER] switch works smoothly.
⑥ Replace the top and bottom covers.

CAUTION: After replacing the lithium battery, turn power ON and OFF, otherwise, the lithium battery will become exhausted rapidly.

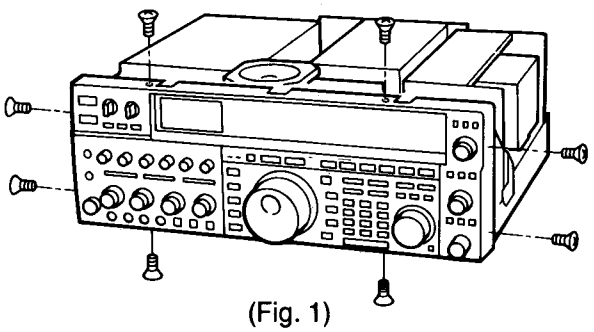

(Fig. 1)

Top side : ⊕
Bottom side : ⊖
(⊕ terminal is visible after installation.)

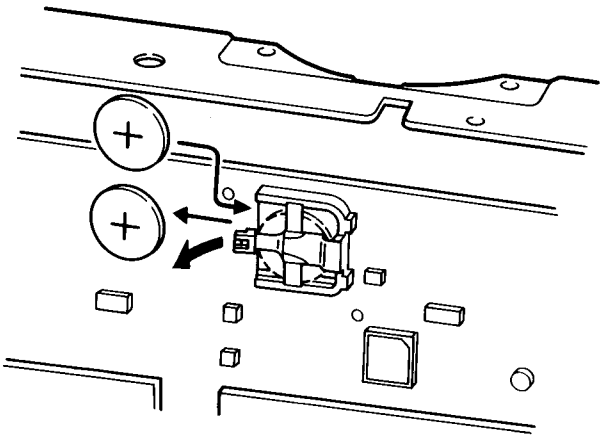

(Fig. 2)

ManualsPlus.com

SECTION 3 INSIDE VIEWS

• BOTTOM VIEW

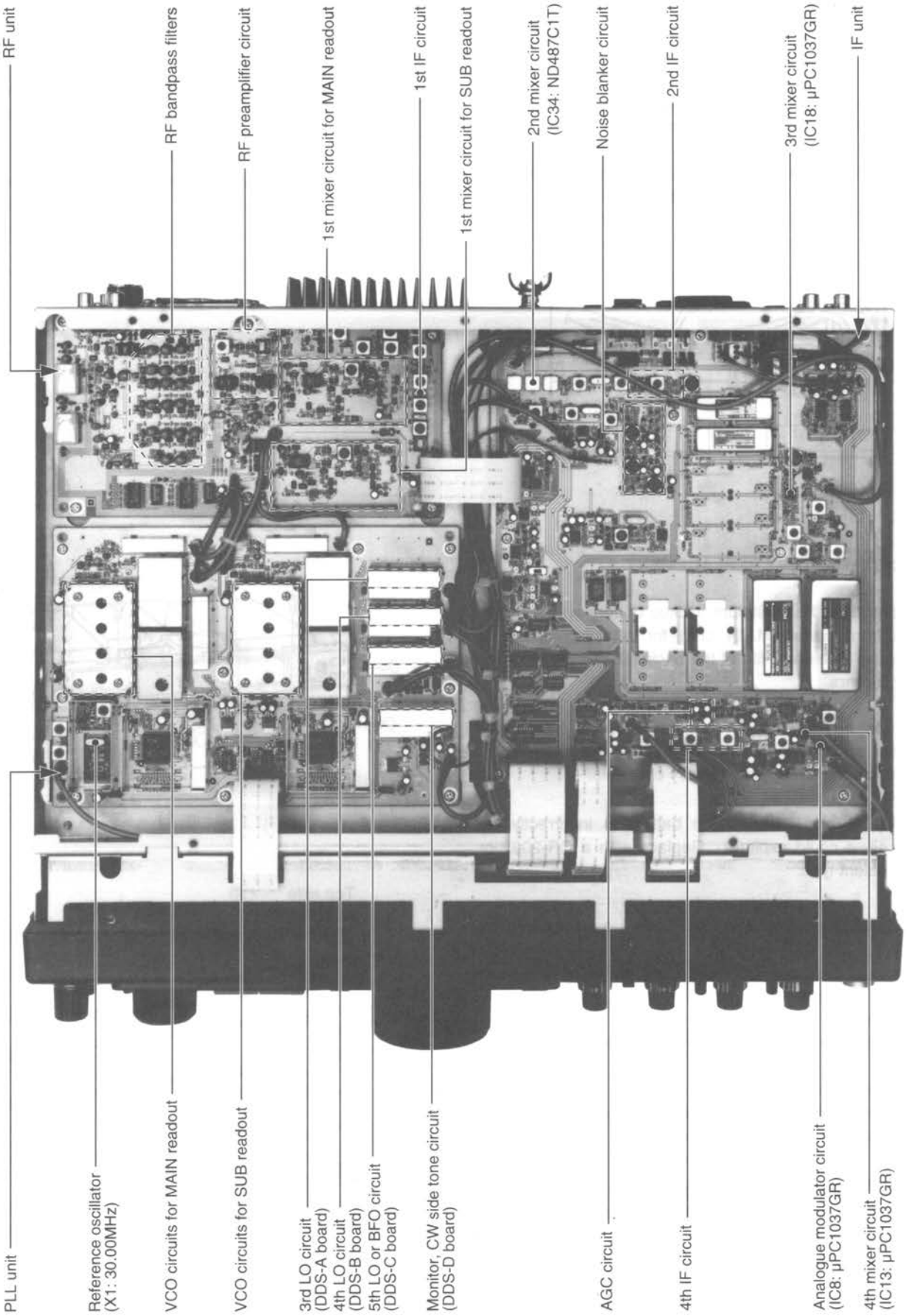

ManualsPlus.com

• TOP VIEW

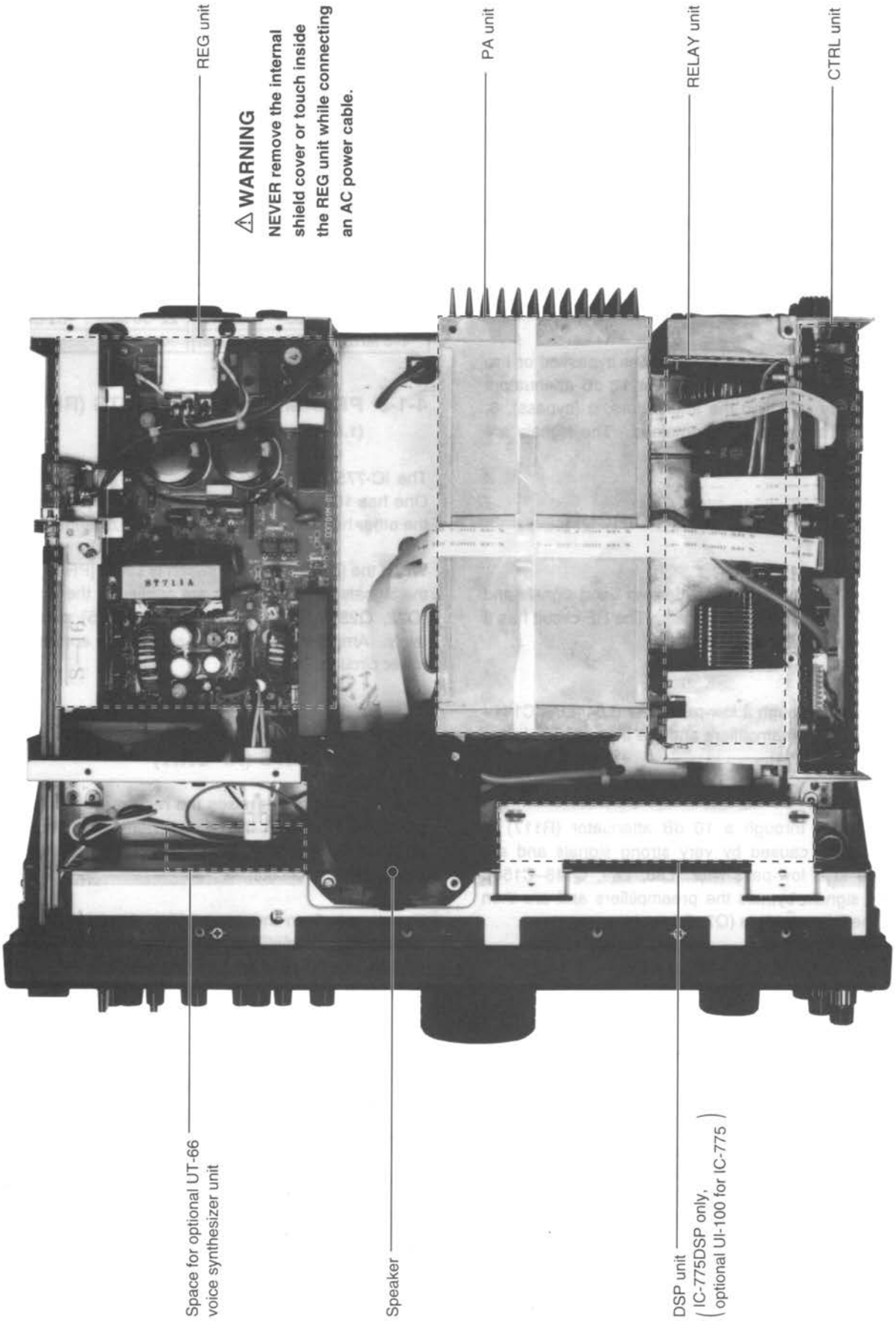

ManualsPlus.com

SECTION 4 CIRCUIT DESCRIPTION

4-1 RECEIVER CIRCUITS

4-1-1 RF SWITCHING CIRCUIT (CTRL AND RF UNITS)

The RF switching circuit leads receive signals to bandpass filters from an antenna connector while receiving. While transmitting, this circuit leads the signals from the RF power amplifier to the antenna connector.

RF signals from an antenna connector, pass through the antenna selecting relay (RL3), transmit/receive switching relays (RL1, RL2, RL4, RL12) and low-pass filter (L15, L16, C48–C50), and are then applied to the RF unit via J10 (RF unit J7-1).

The signals from the CTRL unit are either bypassed or are applied to the 6 dB (R132, RL2) and/or 12 dB attenuators (R131, RL1). By selecting the attenuators, 0 (bypass), 6, 12 and 18 dB attenuations are obtained. The signals are then applied to RF filters.

4-1-2 RF BANDPASS FILTER CIRCUIT (RF UNIT)

RF bandpass filters pass only the desired band signals and suppress any undesired band signals. The RF circuit has 9 bandpass filters and 2 low-pass filters.

(1) 0.1–0.5 MHz

The signals pass through a low-pass filter (L84–L86, C141–C145), bypass the preamplifiers and are then applied to the RF amplifiers (Q7, Q14).

(2) 0.5–1.6 MHz

The signals pass through a 10 dB attenuator (R117) to prevent distortion caused by very strong signals and are then applied to a low-pass filter (L88, L89, C148–C150). The filtered signals bypass the preamplifiers and are then applied to the RF amplifiers (Q7, Q14).

(3) 1.6–30.0 MHz

The signals pass through a high-pass filter (L134, L135, L137, C226–C229) to suppress strong signals below 1.6 MHz. The filtered signals are applied to one of 9 bandpass filters as below, a PIN attenuator (D42), and then applied to or bypassing the preamplifier circuit.

Used RF filter

Band	Control signal	Input diode	Band	Control signal	Input diode
0.1–0.5 MHz	B1	D19(1/2)	6–8 MHz	B7	D25(1/2)
0.5–1.6 MHz	B2	D19(1/2)	8–11 MHz	B8	D27(1/2)
1.6–2 MHz	B3	D21	11–15 MHz	B9	D27(1/2)
2–3 MHz	B4	D23(1/2)	15–22 MHz	B10	D29(1/2)
3–4 MHz	B5	D23(1/2)	22–30 MHz	B11	D29(1/2)
4–6 MHz	B6	D25(1/2)			

4-1-3 PREAMPLIFIER CIRCUITS (RF UNIT) (1.6 MHz and above)

The IC-775/DSP has 2 gain levels of preamplifier circuits. One has 10 dB gain over a wideband frequency range and the other has 16 dB gain for 21–28 MHz bands.

When the [PREAMP/ATT] switch is set to [PRE1] or [PRE2], the signals above 1.6 MHz are applied to the preamplifier 1 (Q22, Q23) or preamplifier 2 (Q24, Q25) circuit, respectively. Amplified or bypassed signals are applied to the 1st mixer circuits.

4-1-4 RF AMPLIFIER AND 1st MIXER CIRCUITS (RF UNIT)

The 1st mixer circuit mixes the receive signals with the 1st LO signal to convert the receive signal frequencies to a 69 MHz 1st IF. The IC-775/DSP has two 1st mixer circuits for the dualwatch function.

The signals from the preamplifier circuit, or signals which bypass the preamplifiers, are divided at L52. Each signal is applied to a 30 MHz cut-off low-pass filter, RF amplifier (Q7 or Q14) and then to a 1st mixer (Q5/Q6 or Q12/Q13).

• RECEIVER CONSTRUCTION

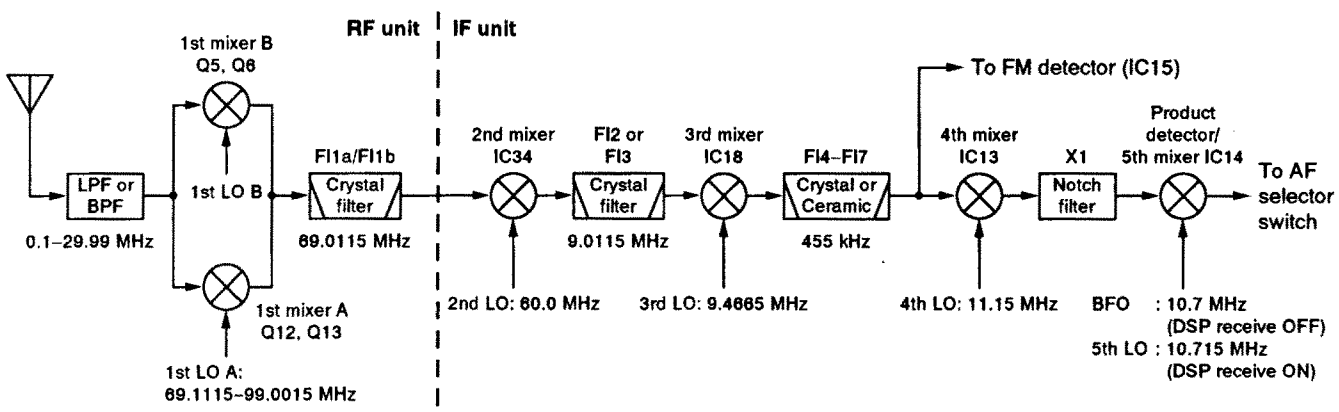

ManualsPlus.com

Each 1st LO signal (69.1115–99.0015 MHz) enters the RF unit from the PLL unit via P1 or P2. The LO signals are amplified at Q1 or Q8, filtered by a low-pass filter, and then, applied to each 1st mixer.

1st IF frequency

Mode	Frequency
SSB	69.0115 MHz
CW, RTTY	69.0106 MHz
AM, FM	69.0100 MHz

4-1-5 1st IF CIRCUIT (RF UNIT)

The 1st IF circuit filters and amplifies the 1st IF signals. The 1st IF signals combined at L34 are applied to an MCF (Monolithic Crystal Filter; FI1) to suppress out-of-band signals.

The levels of the converted 1st IF signals are adjusted at PIN attenuators (D1, D3, D4 and D5, D7, D8) controlled by the [BALANCE] control. The signals are applied to a 1st IF amplifier (Q4 or Q11) and then combined at L34.

The combined signals pass through the pair of MCF's (FI1) and are amplified at Q15. The signals are applied to the 2nd mixer (IC34) in the IF unit via P3 (IF unit J8). The AGC voltage is supplied to the 2nd gate of Q15.

4-1-6 2nd MIXER CIRCUIT (IF UNIT)

The 2nd mixer circuit mixes the amplified 1st IF signals and 2nd LO signal (60.00 MHz) to convert the 1st IF to a 2nd IF.

The 1st IF signals from the RF unit are converted to 9 MHz 2nd IF signals at the 2nd mixer (IC34).

The 2nd IF signals are applied to FI1 to suppress undesired signals such as the 2nd LO signal, and are then applied to the noise blanker gate (D68–D71).

2nd IF frequency

Mode	Frequency
SSB	9.0115 MHz
CW, RTTY	9.0106 MHz
AM, FM	9.0100 MHz

4-1-7 NOISE BLANKER CIRCUIT (IF UNIT)

The noise blanker circuit detects pulse type noise, and turns OFF the signal line when noise appears.

The 2nd IF signals from FI1 are applied to the noise blanker gate (D68–D71). A portion of the signals from FI1 are amplified at the noise amplifiers (Q47–Q49), then detected at the noise detector (D75) to convert the noise components to DC voltages.

The signals are then applied to the noise blanker switch (Q57–Q59). At the moment the detected voltage exceeds the Q59's or Q58's threshold level, Q57 outputs a blanking signal to close the noise blanker gate (D68–D71) by applying reverse-biased voltage. Q58 and Q59 are activated by narrow-width pulses and high level pulses, respectively. The [NB LEVEL] control adjusts the threshold level of Q58 and Q59.

The detected voltage is also applied to the noise blanker AGC circuit (Q52) and is then fed back to the noise amplifiers (Q47–Q49) as a bias voltage. The noise AGC circuit prevents closure of the noise blanker gate for long periods by non-pulse-type noise. The time constant of the noise blanker AGC circuit is determined by R55 and C41. Q54–Q56 expand the blank width when [NB WIDE] is turned ON. The [BLK-WIDTH] control adjusts the blank width.

The signals from the noise blanker gate are then applied to the 2nd IF circuit.

4-1-8 2nd IF CIRCUIT (IF UNIT)

The 2nd IF circuit amplifies and filters the 2nd IF signals.

The signals passed through the noise blanker gate (D68–D71) are amplified at Q46 and applied to a 2nd IF filter as shown in the following table.

2nd IF filters

Mode	Used filter	Control signal
CW/RTTY wide, SSB med., AM nar.	FL-80 (FI2)	2N24
CW/RTTY med.	FL-32A (FI3)	2N05
CW/RTTY nar.	Optional FL-101	2NCO
SSB wide, AM med., FM nar.	Optional FL-102	2NAO
SSB nar.	Optional FL-223	2NSO
AM wide, FM med.	Bypassed	2NTH

The filtered or bypassed signals are then applied to the 3rd mixer circuit through a buffer amplifier (Q38).

4-1-9 3rd MIXER AND 3rd IF CIRCUITS (IF UNIT)

The 3rd mixer circuit mixes the 2nd IF signals and the 3rd LO signal to obtain the 3rd IF (455 kHz) signals.

The 2nd IF signals from Q38 are applied to the 3rd mixer (IC18 pin 6). The 3rd LO signal from the PLL unit is applied to the 3rd mixer (IC18 pin 8). The 2nd IF signals are converted to 3rd IF signals. The 3rd IF signals are amplified at Q39, and then applied to one of the 3rd IF filters.

3rd IF filters

Mode	Used filter	Control signal
CW/RTTY wide, SSB med., AM nar.	FL-96 (FI4)	3R26
CW/RTTY med.	FL-52A (FI5)	3R05
SSB wide, AM med., FM nar.	CFW455HT (FI6)	3R60
AM wide, FM med.	CFW455E (FI7)	3RFM
CW/RTTY nar.	Optional FL-53A	3RCO
SSB nar.	Optional FL-222	3RSO

ManualsPlus.com

The filtered signals are amplified at Q12, and then applied to the 4th mixer or FM detector circuit.

4-1-10 4th MIXER AND 4th IF CIRCUITS (IF UNIT)

The 4th mixer circuit mixes the 3rd IF signals and the 4th LO signal to obtain the 4th IF (10.6950 MHz) signals.

The 3rd IF signals from Q12 are applied to the 4th mixer (IC13 pin 6), except in FM mode, and are mixed with the 4th LO signal to be converted into 4th IF signals. The 4th IF signals are applied to the IF notch filter (X1), filtered at FI8 and then amplified at Q13 and Q14. R198 sets the total gain.

The 4th IF signals are applied to the AM detector circuit via the buffer-amplifier (Q15) or product detector (IC14 pin 6). IC14 functions as the 5th mixer when the DSP (Digital Signal Processor) receive function is turned ON.

4-1-11 TWIN PBT CIRCUIT (IF UNIT)

The PBT (PassBand Tuning) circuit shifts the center frequency of IF signals to electronically narrow the passband width. The IC-775/DSP has 2 PBT circuit.

The twin PBT circuit shifts the 2nd and 3rd IF within ± 1.5 kHz. As a result, the 2nd and 3rd IF are shifted from the center frequencies of the 2nd and 3rd IF filters. This means 2nd or 3rd IF signals do not pass through the center of the 2nd or 3rd IF filters because the passband width is fixed in the 2nd or 3rd IF filter. Therefore, the overlap of the 2nd/3rd or 3rd/4th IF filter appears to be narrowed. Since the 3rd and 4th LO frequencies are also shifted the same value as the 2nd and 3rd IF shifts, frequencies are corrected at the detector.

In the IC-775/DSP, the 1st LO frequency is shifted to change the 2nd IF because a fixed 2nd LO frequency (60 MHz) is used. The 1st IF filter (RF unit FI1) and crystal filter (IF unit FI1) have 15 kHz passband widths and do not affect PBT operation.

4-1-12 IF NOTCH CIRCUIT (IF UNIT)

The IF notch circuit attenuates a specified audio frequency in the IF section to increase readability of desired signals.

The IF signals from the 4th mixer (IC13) are applied to the IF notch circuit (X1). The crystal filter has excellent cut-off frequency characteristics and attenuation of more than 45 dB. The IF notch frequency is controlled by shifting the 4th IF to obtain the same attenuation characteristics within the IF band width. The 4th IF frequency can be adjusted with the [NOTCH] control.

When the [NOTCH] switch is turned OFF, the 4th IF signals pass through X1 out of the notch filtering frequency. Therefore, the IF notch circuit is substantially bypassed by the 4th IF signals.

4-1-13 AGC CIRCUIT (IF UNIT)

The AGC (Automatic Gain Control) circuit reduces IF amplifier gain to keep the audio output at a constant level.

The receiver gain is determined by the voltage on the AGC line (Q17 collector). Q26 supplies minus voltage to the AGC line and sets the receiver gain with the [RF] control.

The 4th IF signal from the buffer amplifier (Q15) is detected at the AGC detector (D10) and is then applied to the DC amplifier (Q17). −5 V is applied to the Q17 emitter to activate the AGC line using minus voltage.

When receiving strong signals, the detected voltage increases and the AGC voltage decreases via the DC amplifier (Q17). As the AGC voltage is used for the bias voltage of the IF amplifiers (Q13, Q14, Q39, Q46 and RF unit Q15), IF amplifier gain is decreased. The AGC voltage is also applied to the PIN attenuator (D42) in the RF unit to attenuate the received signals before the 1st mixers.

When the strong signal disappears, the AGC line voltage is released by C146–C148 and R222 while in SSB, CW and RTTY mode. While in AM or FM mode, C145 or R221 is connected in parallel to obtain appropriate AGC characteristics, respectively.

AGC circuit

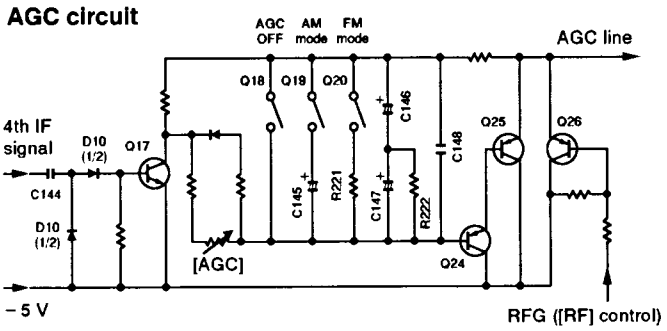

4-1-14 S-METER CIRCUIT (IF UNIT)

The S-meter circuit indicates the relative received signal strength while receiving by utilizing the AGC voltage which changes depending on the received signal strength.

The AGC bias voltage (time constant line) is applied to a differential amplifier (IC7b pin 6) where the difference between the AGC and reference voltages is detected.

The resulting S-meter signal passes through the meter switching circuit (IC6 pins 3, 13) via the "SQLV" signal line. The S-meter signal is applied to the main CPU, sub CPU, and then to the S/RF meter on the front panel.

The S-meter signal (SQLV) is also applied to the main CPU (MAIN unit IC12 pin 93) for S-meter squelch detection.

4-1-15 SQUELCH CIRCUIT (MAIN, IF AND SW-A UNITS)

The squelch circuit mutes audio output when the S-meter signal is lower than the [SQL] control setting level.

ManualsPlus.com

The S-meter signal is applied to the main CPU (MAIN unit IC12 pin 93) and is compared with the threshold level set by the [SQL] control. The [SQL] setting is picked up at the A/D converter (SW-A unit IC7) and then applied to the sub CPU (IC8). The CPU compares the S-meter signal and [SQL] setting to close or open the squelch.

In addition, the noise squelch signal (FMND) from the FM IF IC is applied to the main CPU (pin 92) in FM mode. A portion of the AF signals from the FM IF IC (IF unit IC15, pin 9) are applied to the active filter section (pin 8) where noise components above 20 kHz are amplified. The signals are rectified at the noise detector section and then output from pin 13. The resulting signal is applied to the main CPU via the "FMND/ASQN" signal line.

4-1-16 SSB/CW DEMODULATOR CIRCUIT (IF UNIT)

While in SSB or CW mode (DSP detection is OFF), the 4th IF signals from Q14 are mixed with the BFO signal from the PLL unit at the product detector (IC14 pin 6). The detected AF signal from IC14 (pin 2) is applied to the AF selector switch (IC16, IC17).

4-1-17 AM DEMODULATOR CIRCUITS (IF UNIT)

While in AM mode (DSP detection is OFF), the 4th IF signals from the IF amplifier (Q14) are amplified at Q15 and detected at D8. The detected AF signal is then applied to the AF selector switch (IC16, IC17) via Q16.

4-1-18 FM DEMODULATOR CIRCUIT (IF UNIT)

While in FM mode, the 3rd IF signals from the buffer amplifier (Q12) are applied to the FM IF IC (IC15 pin 5) where the IF signals are converted into AF signals. X2 is used for quadrature detector. The detected AF signals are then applied to the AF selector switch (IC16, IC17) via Q30 and Q31.

4-1-19 AF SELECTOR SWITCH (IF UNIT)

The AF signal from one of the detector circuits is applied to the AF selector switch (IC16, IC17). IC16 and IC17 consist of 8 analog switches which are selected with a mode signal and the squelch control signal.

The AF signal is output from IC16 (pin 3) and then applied to the AF amplifier circuit in the MAIN unit. When the DSP receive function is ON, the AF or 5th IF signal is output from IC17 (pin 3), buffer-amplified at Q32 and then applied to the DSP unit.

AF selector switch

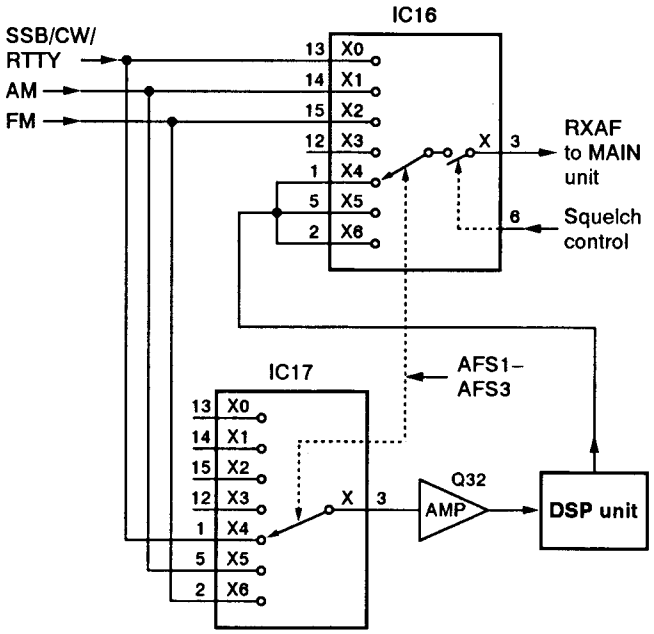

4-1-20 APF AND AF LOW-PASS FILTER CIRCUITS (MAIN UNIT)

The APF (Audio Peak Filter) boosts a specified frequency to pick up a desired CW signal, etc. The low-pass filter cuts off higher audio frequencies.

When [APF] is turned ON, the AF signal from the AF selector switch is applied to the APF circuit (IC1a pin 2). The [APF] control adjusts the peak frequency within 200–1000 Hz. IC2 is a triple 2-channel analog switch IC and either applies the AF signal to the APF circuit or bypasses the APF circuit.

When [AF LPF] or [AUTO] is turned ON (deactivating the DSP functions for DSP-equipped types), the AF signal from the APF circuit is applied to the 1.5 kHz cut-off AF low-pass filter (IC1b pin 5). IC2 either applies the AF signal to the low-pass filter or bypasses the low-pass filter.

APF and low-pass filter circuits

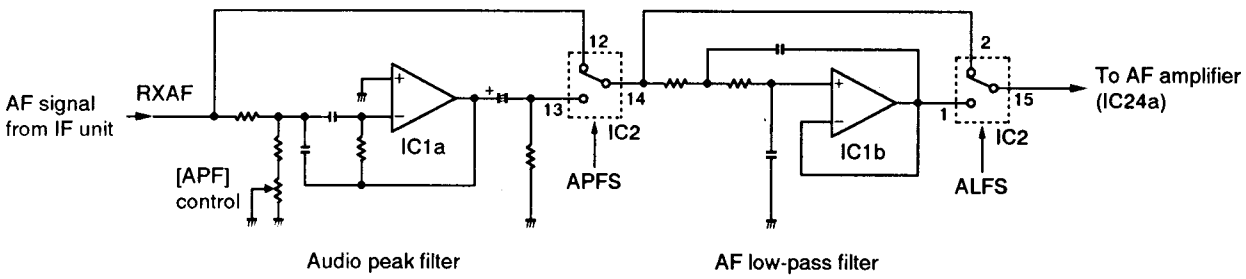

ManualsPlus.com

4-1-21 AF AMPLIFIER CIRCUIT (MAIN UNIT)

The AF amplifier amplifies the AF input signal to a suitable driving level for the speaker.

The AF signal from the AF low-pass filter (IC1b) is applied to the AF amplifiers (IC24a, IC7a). The CW side tone/ transmit monitor signal and beep tone are amplified at IC7b and IC24b, respectively.

The amplified signals from IC7a, IC7b and IC24b are applied to the [TONE] control (VR-A unit R32) and then to the VCA (Voltage Controlled Amplifier, IC16) circuit. The AF gain setting from the main CPU (pins 42–51) is converted to DC voltage at R58–R77 and applied to the VCA control terminal (IC16 pin 8) via IC20a. The AF signal from IC16 (pin 9) is power-amplified at IC6 to drive the speaker.

4-2 TRANSMITTER CIRCUITS

4-2-1 MICROPHONE AMPLIFIER CIRCUIT (MAIN AND IF UNITS)

The microphone amplifier circuit amplifies microphone input signals and outputs the amplified signals to the balanced modulator, DSP (PSN) modulation circuit or FM/AM modulation circuit.

Audio signals from the [MIC] connector are amplified at VCA IC (IC8). The amplified signals from pin 4 are applied to the [MIC TONE] control (VR-A unit R43) and then to the VCA section of IC8 (pin 7). The microphone gain setting from the main CPU (pins 32–41) is converted to DC voltage at R38–R57 and applied to the VCA control terminal (IC8 pin 8) via IC20b. The resulting signals from pin 9 are then applied to IC10a (IF unit) via the "MIG2" signal line. External modulation input from the [ACC(1)] socket (pin 4) is also applied to IC10a (IF unit).

The amplified signals from IC10a are then applied to the AF selector switch (IC9) for SSB modulation or the amplifier (IC10b) for FM/AM modulation.

When the DSP modulation is turned ON, pins 3/5 and 13/14 of the AF selector switch (IC9) are connected. Therefore, the amplified signal is applied to the DSP unit and the resulting signal (15 kHz IF) is applied to the mixer (IC8) via IC9.

4-2-2 VOX CIRCUIT (MAIN UNIT)

The VOX (Voice-Operated-Transmission) circuit sets transmitting conditions according to voice input.

The microphone signal from IC8 pin 4 passes through the [VOX-GAIN] control (VR-A unit R45) and is amplified at IC23b. The signal is then applied to the VOX comparator (IC23d pin 13) to switch Q23, IC17, IC22, Q5. When voice levels exceed the comparator level, the VOX circuit sets the transceiver to transmit.

On the other hand, a speaker drive signal from the AF power amplifier (IC6) is applied to the anti-VOX comparator (IC23a pin 3) via the [ANTI-VOX] control (VR-A unit R44). When audio output level increases, this comparator cuts out the VOX comparator input using Q6.

4-2-3 BALANCED MODULATOR (IF UNIT)

The balanced modulator converts the AF signal from the microphone amplifier to a 455 kHz IF signal with a BFO (Beat Frequency Oscillator) signal.

Microphone signals from the AF selector switch (IC9 pins 1, 3) are applied to the balanced modulator (IC8 pin 6). The BFO signal from the PLL unit is applied to IC8 (pin 8) as a carrier signal.

IC8 is a double balanced mixer IC and outputs a double side band (DSB) signal with −40 dB of carrier suppression. R273 and R274 adjust the balanced level of IC8 for maximum carrier suppression. The resulting signal passes through the 455 kHz IF filter (FI4; FI6 when PSN modulation) to suppress unwanted sideband signals.

When DSP modulation is turned ON, IC8 functions as a mixer. IC8 mixes the 15 kHz IF signal with a 440 kHz LO to obtain a 455 kHz IF signal.

In CW and RTTY modes, IC9 pins 2 and 3 are connected to upset the balance of IC8 via R268 for leaking the BFO signal as a carrier signal. CW keying is controlled at Q10 via the "WFM4" signal.

• TRANSMITTER CONSTRUCTION

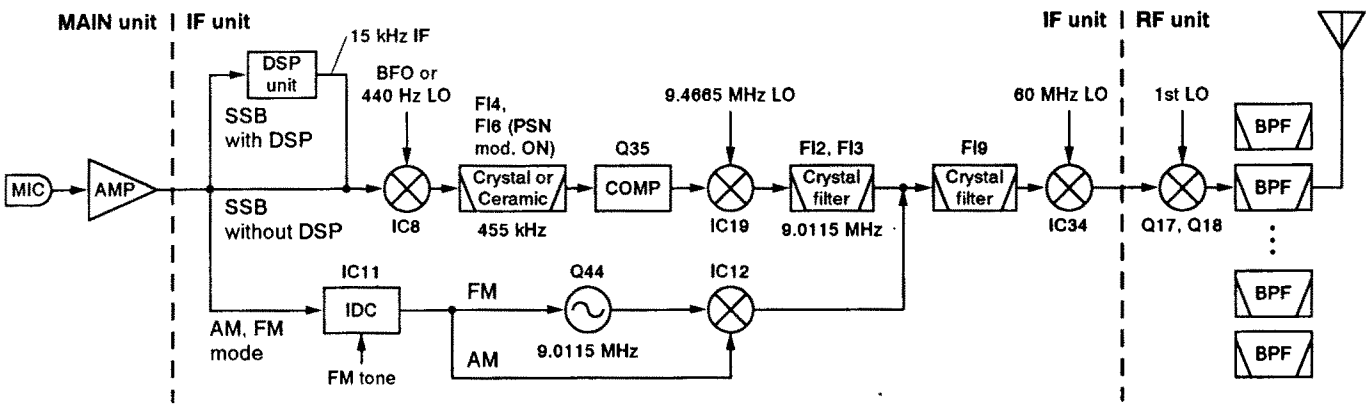

ManualsPlus.com

4-2-4 FM AND AM MODULATION CIRCUITS (IF UNIT)

(1) While in FM mode

The microphone signals from IC10a are amplified at IC10b and pass through the limiter amplifier (IC11a) and the splatter filter (IC11b). The subaudible tone signal (67.0–254.1 Hz) from the PLL unit is also applied to IC11a pin 2 for repeater use.

The resulting signals are applied to the modulation circuit (D65) via R292. The modulation circuit changes the reactance of the local oscillator (Q44, X3) to obtain FM modulation. The modulated signal is applied to the transmitter IF amplifier (Q78) via IC12.

(2) While in AM mode

The microphone signals from IC11b are applied to the balanced modulator (IC12) and upset the balance to obtain AM modulation. The local oscillator (Q44, X3) oscillates a 9.0115 MHz signal with no FM modulation.

4-2-5 RF SPEECH COMPRESSOR CIRCUIT (IF UNIT)

The RF speech compressor compresses the transmitter IF signal to increase the average talk power.

When the [COMP] switch is ON, the IF signal from a 455 kHz filter is buffer-amplified at Q33 and is then applied to the RF compressor circuit (Q35, D31). The resulting signal is applied to the IF amplifier (Q36). The 2nd gate of Q36 is controlled by the [DRIVE] control (VR-A unit R22). When the [COMP] switch is OFF, the IF signal bypasses the compressor circuit via D27 and D29.

The resulting signal is mixed with 9.4665 MHz LO signal at IC19 to obtain a 9 MHz IF signal.

4-2-6 IF AMPLIFIER (IF AND RF UNITS)

The 9 MHz IF signal from IC19 passes through the 9 MHz IF filter (FI2) in CW/RTTY modes or in SSB mode with [COMP] ON. The IF signal bypasses the IF filter in SSB mode with [COMP] OFF and in RTTY DATA mode. The signal is amplified at Q78, passes through FI9 to suppress the unwanted signal and is applied to a transmit IF amplifiers (Q45). In FM or AM mode, the 9 MHz IF signal from IC12 passes through FI9 and is then applied to the transmit IF amplifier (Q45).

The amplified signal from Q45 is mixed with the 2nd LO signal (60 MHz) and converted to a 69 MHz IF signal at IC34. IC34 is used in receiving and transmitting. The 69 MHz IF signal enters the RF unit, is amplified at the IF amplifier (Q16) and is then converted to the displayed frequency at the balanced mixer (Q17, Q18) with the 1st LO signal.

The gates of the IF amplifiers (IF unit Q45, RF unit Q16) are controlled by ALC bias voltage from the ALC circuit. R23 adjusts the total transmitter gain.

4-2-7 RF CIRCUIT (RF AND PA UNITS)

The RF circuit amplifies the displayed frequency signal to obtain 200 W of RF output power.

The signals from the balanced mixer (Q17, Q18) is amplified at Q19 and then pass through one of 9 bandpass filters. (Refer to p. 4−1 for used RF filter.) The filtered signal is amplified at Q32, and is then applied to the PA unit.

The signal which enters the PA unit is amplified at the predrive amplifier (Q1), drive amplifier (Q2, Q3) and power amplifier (Q4a, Q4b) in sequence to obtain a stable 200 W of RF output power. The signal from the power amplifier is applied to one of the low-pass filters in the FILTER unit.

4-2-8 LOW-PASS FILTER CIRCUIT (FILTER UNIT)

The low-pass filter circuit consists of 7 Chebyschev low-pass filters to suppress the higher harmonic components.

The signal from the power amplifier is applied to one of the low-pass filters. According to the operating frequency, the I/O expander (IC1) selects a low-pass filter using IC2.

The filtered signal is then applied to one of 2 antenna connectors via the antenna tuner circuit.

4-2-9 ALC CIRCUIT (IF UNIT)

The ALC (Automatic Level Control) circuit controls the gain of IF amplifiers in order for the transceiver to output a constant RF power set by the [PWR] control even when the supplied voltage shifts, etc.

The RF power signal level is detected at D2 (CTRL unit) and applied to the IF unit as the "FOR" voltage.

The "FOR" voltage from the CTRL unit is applied to IC3a (pin 2). The "POC" voltage, controlled by the [PWR] control (VR-A unit R40), is applied to IC3a (pin 3) as the reference voltage.

When the "FOR" voltage exceeds the "POC" voltage, ALC bias voltage from IC3a (pin 1) controls the IF amplifiers (Q45, RF unit Q16) using Q3. This adjusts the output power to the determined level by the [PWR] control until the "FOR" and "POC" voltages are equalized.

In AM mode, IC3a operates as an averaging ALC amplifier with Q5 and C223. Q7 turns ON and the "POC" voltage is shifted for 50 W AM output power (maximum) through R362.

The ALC bias voltage from Q3 is also applied to the inversion-amplifier (IC3b pin 6) to obtain an ALC meter signal. It passes through the meter switching circuit (IC6 pin 12) and is then applied to the S/RF meter. IC6 pins 3 and 12 are shorted while transmitting and when the ALC meter is selected with the [METER] switch.

ManualsPlus.com

An external ALC input from the [ALC] jack or the [ACC] sockets is applied to the buffer amplifier (Q4). External ALC operation is identical to that of the internal ALC.

4-2-10 APC CIRCUIT (IF UNIT)

The APC (Automatic Power Control) circuit protects the power amplifiers on the PA unit from high SWR and excessive current.

The reflected wave signal appears and increases on the antenna connector when the antenna is mismatched. D1 of the SWR detector circuit (L2, D1, D2) in the CTRL unit detects the signal and applies it to IC2a in the IF unit as the "REF" signal.

When the "REF" signal level increases, IC2a decreases the "ALC" voltage via IC1b to activate the ALC.

For the current APC, the power transistor current is obtained by detecting the voltages ("ID+" and "ID−") which appear at both terminals of a 0.012 Ω resistor (R35) on the PA unit. The detected voltage is applied to the differential amplifier (IC1a pins 2, 3). When the current of the final transistors is more than 18 A, IC1a controls the ALC line via IC1b to prevent excessive current flow.

When activating the antenna tuner with manual tuning, the "PODN" signal turns Q7 ON. As a result, the "POC" voltage is shifted to reduce the output power to 50 W.

4-2-11 TEMPERATURE PROTECTION CIRCUIT (PA UNIT)

The cooling fan (MF1) is activated while transmitting or if the temperature of the final transistors exceeds the preset value.

While transmitting, Q5 and Q8 are turned ON, and provide a voltage to MF1. MF1 rotates at medium speed in this case. Thermistor R29 detects the temperature of Q4b. When the Q4b temperature exceeds 60℃ (140℉), R29 activates Q7 and Q9 to accelerate the cooling fan. MF1 rotates at high speed at 80℃ (176℉) or more.

R29 keeps the cooling fan rotating even when receiving until the Q4b temperature drops to 40℃ (104℉) or below.

4-2-12 MONITOR CIRCUIT (IF UNIT)

Transmitted IF signals can be monitored to check voice characteristics when [MIC TONE] is adjusted or the transmit low-pass/high-pass filters (DSP functions) are in use.

A portion of the 9 MHz transmit IF signals from Q45 are amplified at Q62 and are then demodulated at IC20 with the MBFO signal from the PLL unit. The demodulated AF signal is applied to the AF selector (IC21). The CW side tone signal (300–900 Hz) from the PLL unit is also applied to the AF selector via the AF gate (Q63). Q63 switches the side tone signal with a keying signal.

The selected AF signal is applied to the AF amplifier circuit in the MAIN unit.

4-2-13 RF, SWR, ALC, COMP, ID, VD METER CIRCUITS (IF UNIT)

While transmitting, RF, SWR, ALC, COMP, ID or VD meter readings are available and can be selected with the [METER] switch.

(1) Power meter circuit

The "FOR" voltage from the CTRL unit is applied to the power meter amplifier (IC2b pin 5). The "POM" signal from IC2b (pin 7) is applied to the meter switch (IC6 pin 15). R456 and C210 are used for peak hold.

(2) SWR meter circuit

The "FOR" voltage, amplified at IC2b, is applied to the SWR meter circuit (IC4, IC5, Q1, Q2). The "REF" voltage, amplified at IC2a, is also applied to the SWR meter circuit. IC4b outputs a signal according to the ratio of "FOR" to "REF" voltage. The signal is applied to the meter switch (IC6 pin 14).

(3) ALC meter circuit

The ALC bias voltage is applied to the inversion-amplifier (IC3b pin 6) and is then applied to the meter switch (IC6 pin 12).

(4) COMP meter circuit

A portion of the RF speech compressor (Q35) output is detected at D33, applied to the buffer-amplifiers (Q37, IC7a pin 3), and is then applied to the meter switch (IC6 pin 1).

(5) ID meter circuit

A portion of the current APC circuit (IC1a) output is applied to the meter switch (IC6 pin 5) via R319.

(6) VD meter circuit

The "ID−" voltage is divided at R326 and R327 and is applied to the meter switch (IC6 pin 2).

(7) Meter switch

According to the transmit meter selection and operating condition, IC6 selects the meter signals and outputs from pin 3 as the "MET" signal. The "MET" signal is applied to the S/RF meter (DISPLAY unit ME1) via the main and sub CPUs.

Meter switch

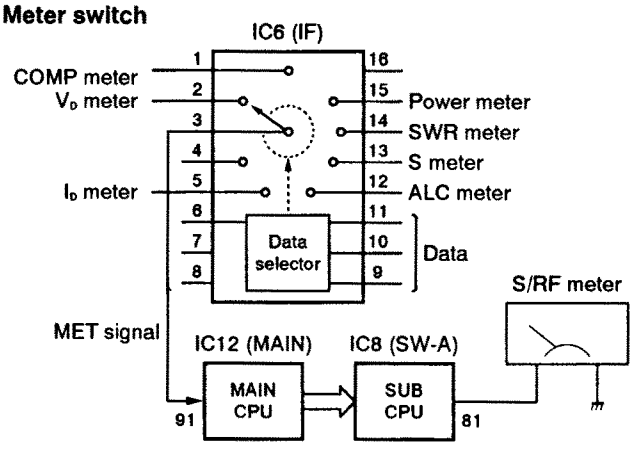

ManualsPlus.com

4-3 PLL CIRCUITS

4-3-1 GENERAL

The PLL unit generates a pair of 1st LO frequencies (69.1115–99.0015 MHz), a 2nd LO frequency (60 MHz), a 3rd LO frequency (9.4665 MHz), a 4th LO frequency (11.15 MHz), a BFO/5th LO frequency (10.7 or 10.715 MHz), a monitor BFO (9.0115 MHz), a CW side tone (300–900 Hz) and an FM subaudible tone (67.0–254.1 Hz).

The 1st LO PLLs adopt a mixerless dual loop PLL system and have 4 VCO circuits. The BFOs and LOs, except the 2nd LO, use DDSs while the 2nd LO uses a fixed frequency double that of the crystal oscillator.

4-3-2 1ST LO PLL CIRCUITS (PLL UNIT)

The 1st LO PLLs contain a main loop and reference loop as a dual loop system. Both PLLs have equivalent circuits and this manual describes only the 1st LO PLL A circuit.

The reference loop generates a 10.655 to 10.737 MHz frequency using a DDS circuit, and the main loop generates a 69.1115 to 99.0015 MHz frequency using the reference loop frequency.

(1) REFERENCE LOOP PLL

The oscillated signal at the reference VCO (Q4, D2, D24, D25) is amplified at the amplifiers (Q5, Q7) and is then applied to the DDS IC (IC1, pin 46). The signal is then divided and detected on phase with the DDS generated frequency.

The detected signal output from IC1 (pin 56) is converted into a DC voltage (lock voltage) at the loop filter (R46, R47, C399) and then fed back to the varactor diode (D2) in the VCO circuit.

(2) MAIN LOOP PLL

The oscillated signal at one of the main loop VCOs (Q11, Q13, Q15, Q17) is amplified at the buffer amplifiers (Q19, Q22) and is then applied to the PLL IC (IC2, pin 14). The signal is then divided and detected on phase with the reference loop output frequency.

The detected signal output from IC2 (pins 9, 10) is converted into a DC voltage (lock voltage) at the loop filter and then fed back to one of the varactor diodes (D4, D6, D8, D10) in the VCO circuits.

The oscillated signal is amplified at the buffer amplifiers (Q19, Q20, Q21) and then applied to the RF unit as a 1st LO A signal.

Frequency construction

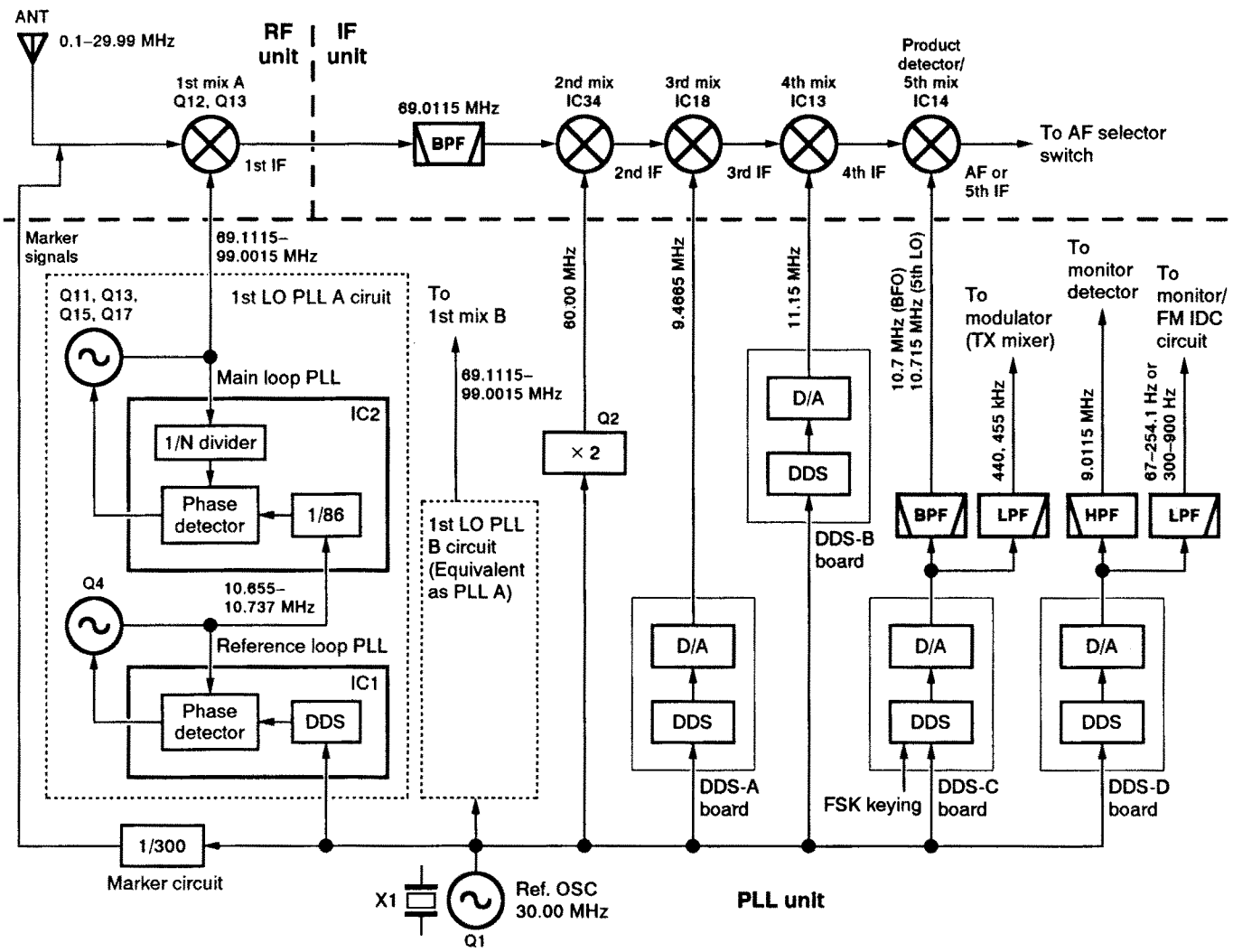

ManualsPlus.com

4-3-3 2ND LO AND REFERENCE OSCILLATOR CIRCUITS

The reference oscillator (X1, Q1) generates a 30.0 MHz frequency used for the 6 DDS ICs as a system clock and for the LO output. The oscillated signal is doubled by 2 at Q2 and the 60 MHz frequency is picked up at the bandpass filter (L6, L7). The 60 MHz signal is applied to the IF unit as a 2nd LO signal.

4-3-4 3RD/4TH LO AND RECEIVE/TRANSMIT/ MONITOR BFO CIRCUITS

(1) 3rd LO circuit

The DDS IC (DDS-A board IC1) generates a 10-bit digital signal using the 30 MHz system clock. The digital signal is converted to an analog wave signal at the D/A converter (R13–R32). The analog wave is passed through the band-pass filter, buffer-amplifier (Q43), low-pass filter and is then applied to the IF unit as the 3rd LO signal.

(2) 4th LO circuit

The DDS IC (DDS-B board IC1) generates a 10-bit digital signal. The signal is converted to an analog wave signal at the D/A converter. The analog wave is passed through the bandpass filter, buffer-amplifier (Q44), low-pass filter and is then applied to the IF unit as the 4th LO signal.

(3) Receive BFO/5th LO and transmit BFO circuits

The DDS IC (DDS-C board IC1) generates a 10-bit digital signal. The signal is converted to an analog wave signal at the D/A converter. The analog wave is passed through the low-pass filter, buffer-amplifier (Q46). While transmitting in RTTY mode, the RTTY keying signal is applied to IC1 pin 2 to shift the generated frequency and to obtain 2 frequencies for FSK operation.

While receiving, the 10.7 MHz BFO or 10.715 MHz 5th LO signal passes through the bandpass filter and is then applied to the IF unit via the "RBFO" signal line.

While transmitting, the 455 kHz BFO or 440 kHz LO signal passes through the low-pass filter and is then applied to the IF unit via the "TBFO" signal line.

Mode	RX 5th LO frequency [MHz]	TX LO/BFO frequency [kHz]
USB	10.712125	437.875
LSB	10.709125	440.875
CW	10.709725 (– CW pitch frequency)	455.9 (non-DSP)
CW-R	10.709725 (+ CW pitch frequency)	455.9 (non-DSP)
RTTY	10.70750 (2125 Hz tone) 10.70801 (1615 Hz tone)	456.0 (non-DSP, MARK)
RTTY DATA	10.707500 (2125 Hz tone) 10.708555 (1070 Hz tone)	440.875
AM/FM	No output	No output

RTTY: Normal polarity DSP: ON [NOTCH]: Center

(4) Monitor BFO, side tone and subaudible tone circuits

The DDS IC (DDS-D board IC1) generates a 10-bit digital signal. The signal is converted to an analog wave signal at the D/A converter. The analog wave is passed through the low-pass filter, buffer-amplifier (Q49).

While transmitting in SSB/RTTY/CW modes with the monitor function, the 9.0115 MHz BFO signal passes through the high-pass filter and is then applied to the IF unit via the "MBFO" signal line.

While transmitting in CW mode without the monitor function, the sidetone signal (300–900 Hz) passes through the low-pass filter and is then applied to the IF unit via the "STON" signal line.

While transmitting in FM mode with the subaudible tone function, the subaudible tone signal (67.0–254.1 Hz) passes through the low-pass filter and is then applied to the IF unit via the "STON" signal line.

4-3-5 MARKER CIRCUITS (MARKER BOARD)

The 30 MHz reference signal is divided by 3 at IC1 and then divided by 100 at IC2 to obtain a 100 kHz signal and its harmonic components signals. The resulting marker signals are applied to the splitter (RF unit L52) which is before the 1st mixer circuits. Q2 and Q3 supply power to the buffer amplifier (Q1) and switch the marker signal output.

4-4 ANTENNA TUNER CIRCUITS

4-4-1 MATCHING CIRCUIT (RELAY, CTRL AND TUNER UNITS)

The matching circuit is a T-network. Using 2 tuning motors, the matching circuit obtains rapid overall tuning speed.

Using relays (RELAY unit RL1–RL6, CTRL unit RL5–RL10), the relay control signals from the antenna tuner CPU (CTRL unit IC13) ground one of the taps of L1–L8 (RELAY unit) and add condensers (CTRL unit C51–C54, C57–C60, C63–C66, C128–C133, C138–C143). After selecting the coils and condensers, 2 motors (TUNER unit MF1, MF2) adjust C1 and C2 (RELAY unit) using the output of a motor control circuit (IC16) to obtain a low SWR (Standing Wave Ratio).

Equivalent circuit

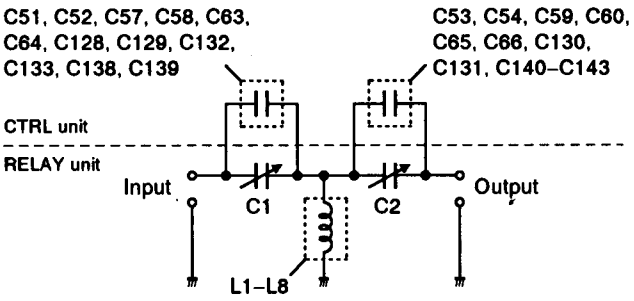

ManualsPlus.com

4-4-2 DETECTOR CIRCUIT (CTRL UNIT)

(1) SWR detector

Forward and reflected power are picked up by L2, detected by D2 and D1, and then amplified at IC1a and IC1b, respectively. The amplified voltages are applied to the antenna tuner CPU (IC13 pins 3 and 2). The CPU detects the SWR.

(2) Reactance components detector

Reactance components are picked up by comparing the phases of the RF current and RF voltage. The RF current is detected by L7 and R19. RF voltage is detected by C10–C12. Both detector voltages are buffer-amplified at IC2a, IC2c, IC3a and IC3d, and are then applied to the phase comparator (IC4, IC5). The output signal of IC5 is detected at D10 and D11. When the RF current phase leads the voltage phase, the detected voltage becomes lower; when the current lags the voltage, the detected voltage becomes higher. The output signal is amplified at IC6a, and then applied to IC13 (pin 64).

(3) Resistance components detector

Resistance components are picked up by L10, and detected by D12, D13 and Q1. The detected resistance components are amplified at IC6b, and then applied to IC13 (pin 1).

4-4-3 MOTOR CONTROL CIRCUIT

The control circuit of the internal antenna tuner consists of the CPU, EEPROM,* tuning motors and tuning relays.

* Electronically-Erasable Programmable Read-Only Memory

(1) CPU and EEPROM (CTRL unit)

The antenna tuner CPU (IC13) controls the tuning motors and tuning relays, and memorizes the best preset position in 100 kHz steps. The memory contents are stored in the EEPROM (IC11) without a backup battery.

(2) Tuning motors (CTRL unit)

A motor driver (IC16) rotates the tuning motors (TUNER unit MF1, MF2) to obtain a low SWR.

Tuning motor	Motor control signals	Description
MF1 (TUNER)	PW, PX, PY, PZ	MF1 rotates C1 (RELAY).
MF2 (TUNER)	RW, RX, RY, RZ	MF2 rotates C2 (RELAY).

(3) Tuning relays (CTRL and RELAY units)

According to the operating band and antenna condition, tuning relays select the condensers and coils.

Tuning relays	Relay control signals	Buffer	Description
RL5–RL10 (CTRL)	P10–P12, P14–P16	IC9	Condenser selection.
RL1–RL6 (RELAY)	3.5M, 7M, 10M, 14M, 21M, 28M	IC14	Coil selection.

4-4-4 ANTENNA TUNER CPU PORT ALLOCATION (CTRL UNIT IC13)

Pin number	Port name	Description
1	R (P62/AN2)	Input port for the resistance detection voltage.
2	REF (P61/AN1)	Input port for the reflected power voltage.
3	FOR (P60/AN0)	Input port for the forward power voltage.
4	PWRS (P57/INT3)	Detects the transceiver power. This port becomes "High" 30 msec. before the power is turned OFF.
7	SETI (P54/CNTR0)	Input port for setting reference voltage.
13	KEY (P46/SCLK1)	Output port for the tuner data.
15	START (P44/RXD)	Input port for the serial data from the transceiver CPU.
17	THRU (P42/INT1)	Outputs the tuner control signal. This port becomes "High" when the tuner is bypassed.
19	RESET	Inputs the reset signal. This port becomes "Low" when the power is turned ON.
21	$\overline{\text{TRC}}$ (P40/INT4)	Inputs transmit/receive switching signals from the MAIN unit. This port becomes "High" while transmitting.
22, 23	XIN, XOUT	Input ports for the CPU system clock.
27–32	3.5M, 7M, 10M, 14M, 21M, 28M (P20–P25)	Output the coil selection signals.
34–36, 38–40	CI1–CI3, CO1–CO3, (P10–P12, P14–P16)	Output the condenser selection signals.
41–44	RW, RX, RY, RZ (P04–P07)	Output tuner motor (MF2) control signals via IC16.
45–48	PW, PX, PY, PZ (P00–P03)	Output tuner motor (MF1) control signals via IC16.
49	P37/RD	Inputs/outputs tuning data for the EEPROM (IC11).
50	P36/WR	Outputs a clock signal for the EEPROM (IC11).
64	P (P63/AN3)	Input port for the reactance detection voltage.

ManualsPlus.com

4-5 LOGIC CIRCUITS

4-5-1 BAND SELECTION DATA (RF, MAIN, FILTER AND PLL UNITS)

To select the correct bandpass filter, low-pass filter and VCOs on the RF, FILTER and PLL units, the CPU outputs the following band selection data from the I/O expander (RF unit IC1, IC2; FILTER unit IC1), the A/D converter (MAIN unit IC13) or DDS ICs (PLL unit IC1, IC4) depending on the displayed frequency.

The A/D converter output from IC13 pin 13 is doubled by 2 at IC15a to obtain the band voltage for external equipment.

Band selection data

Frequency (MHz)	IC1, IC2 (RF)	IC13 (MAIN)	IC1 (FILTER)	IC1 (PLL)	IC4 (PLL)
	BPF	1/2 band voltage	LPF	A VCO	B VCO
0.1–0.49999	B1	3.71 V	L1	V1A	V1B
0.5–1.59999	B2				
1.6–1.99999	B3				
2.0–2.99999	B4	3.18 V	L2		
3.0–3.99999	B5				
4.0–5.99999	B6	2.67 V	L3		
6.0–7.99999	B7				
8.0–10.99999	B8	0 V	L4	V2A	V2B
11.0–14.99999	B9	2.17 V	L5		
15.0–21.99999	B10	1.69 V	L6	V3A	V3B
22.0–29.99000	B11	1.19 V	L7	V4A	V4B

4-5-2 MAIN CPU PORT ALLOCATIONS (MAIN UNIT IC12)

Pin number	Port name	Description
14	IKEY (P23)	Output port for the internal antenna tuner.
15	ISTA (P24)	Input port for the internal antenna tuner.
19	CK (P30)	Outputs a clock signal for the I/O expanders, optional UT-66, etc.
21	DATA (P32)	Outputs serial data for the I/O expanders, optional UT-66, etc.
55	DUT (P73)	Input port for the DSP unit installation.
60	POE (P80)	Outputs an enable signal for the PLL strobe expander IC (IC13).
61	PST1 (P81)	Outputs a strobe signal for the PLL strobe expander IC (IC13).
62	PST2 (P82)	Outputs a strobe signal for the expander IC (IC14) in the PLL unit.
63	PCK (P83)	Outputs a clock signal for the DDS ICs and PLL ICs.
64	PDAT (P84)	Outputs serial data for the DDS ICs and PLL ICs.
66	SQL (P86)	Outputs a squelch control signal.
72	SBSY (P94)	Input port for the optional UT-66 busy signal. This port becomes "High" during speech synthesis.
73	SST (P95)	Outputs a strobe signal for the optional UT-66.
75	CSEN (P97)	Outputs an automatic tuning signal to the internal antenna tuner.
78	BEEP (P11)	Outputs beep tone signals.
86	CIR (P41)	Input port for CI-V bus line.
87	CIT (P42)	Output port for CI-V bus line.
90	TRC (PB0)	Input port for transmit/receive switching signals. This port becomes "Low" while transmitting.
91	AMET (PB1)	Input port for meter signal level.
92	ASQN (PB2)	FM noise level input for squelch control.
93	SQLV (PB3)	S-meter level input for squelch control.
94	AMIC (PB4)	Input port for microphone up/down switches.

ManualsPlus.com

4-5-3 SUB CPU PORT ALLOCATIONS (SW-A UNIT IC8)

Pin number	Port name	Description
1	KSAD (PC3)	Input port for the [KEY SPEED] control.
12, 13	MDUP, MDDN (P21, P22)	Input ports for up/down signal of the main dial.
14, 15	SDUP, SDDN (P23, P24)	Input ports for up/down signal of the sub dial.
32	KD (PA3)	Input port for key down signal.
33	EKEY (PA2)	Outputs a keying signal to the internal keyer.
34	DASH (PA1)	Input port for DASH signal of the paddle.
35	DOT (PA0)	Input port for DOT signal of the paddle.
36–43	KR0–KR7 (P57–P50)	Input ports for return signals of the key matrix.
44–51	KS0–KS7 (P67–P60)	Output strobe signals for the key matrix.
67	BRIC (P87)	Outputs a dimmer control signal for backlighting.
77, 78	RDUP, RDDN (P10, P11)	Input ports for up/down signal of the [RIT/⊿TX] dial.
79	SDAT (P12)	Input port for rapid rotation of the sub dial.
80	MDAT (P13)	Input port for rapid rotation of the main dial.
82	SDCK (P15)	Input port for clock signal of the sub dial.
83	MDCK (P16)	Input port for clock signal of the main dial.
84	RDCK (P17)	Input port for clock signal of the [RIT/⊿TX] dial.
90	MAD (PB0)	Input port for selection voltage of the [METER] switch.
91	PRAD (PB1)	Input port for selection voltage of the [PREAMP/ATT] switch.
95	PB1V (PB5)	Input port for the 455 kHz [PBT] control.
96	PB2V (PB6)	Input port for the 9 MHz [PBT] control.
97	NRAD (PB7)	Input port for the [NR LEVEL] control.
98	BLAD (PC0)	Input port for the [BALANCE] control.
99	PWAD (PC1)	Input port for the [PWR] control.
100	RFAD (PC2)	Input port for the [RF] control.

4-5-4 I/O EXPANDER PORT ALLOCATIONS

(1) Output ports (MAIN unit IC4)

Pin number	Port name	Description
4	VOXS (Q1)	Outputs a control signal for the VOX circuit.
5	MINH (Q2)	Outputs an inhibit signal for the microphone mute circuit (Q25).
6	ALFS (Q3)	Outputs a control signal for the AF low-pass filter.
7	APFS (Q4)	Outputs a control signal for the audio peak filter.
12	FBKS (Q7)	Outputs "Low" while full break-in is selected in CW mode.
13	BKIN (Q6)	Outputs a control signal for the break-in circuit.
14	NBS (Q5)	Outputs a control signal for the noise blanker circuit.

(2) Output ports (IF unit IC30)

Pin number	Port name	Description
4	NBWS (Q1)	Outputs a control signal for the wide noise blanker circuit.
5	PODN (Q2)	Outputs a power down signal. "High" during AM transmitting and tuning an antenna.
6	AGCR (Q3)	Outputs a reset signal for the AGC circuit. "High" during memory scan, programmed scan with [TS] ON and AGC turned OFF.
7	MONS (Q4)	Outputs a control signal for the AF selector (IC21). "High" during SSB/CW/RTTY mode with monitor ON.

(3) Output ports (IF unit IC31)

Pin number	Port name	Description
4–6	MTS1–MTS3 (Q1–Q3)	Output control signals for the meter switch (IC6).
7, 14, 13	AFS1–AFS3 (Q4–Q6)	Output selection signals for the AF signal.
11, 12	MOS1, MOS2 (Q7, Q8)	Output selection signals for the modulation signal.

ManualsPlus.com

4-6 DSP CIRCUITS

The DSP (Digital Signal Processor) unit enables digital noise reduction, digital PSN (Phase Shift Network) modulation/demodulation, digital AF automatic notch, digital LPF and HPF, ultra-narrow CW filter and digital automatic APF (Audio Peak Filter).

4-6-1 DSP RECEIVING (DSP UNIT, IC-775DSP only)

When receiving with the DSP function ON, detected AF signals are applied to the DSP unit via the AF selector (IF unit IC17). When receiving with PSN demodulation in SSB/CW/RTTY modes, the product detector (IF unit IC14) functions as a 5th mixer to obtain a 15 kHz IF signal. The IF signal is applied to the DSP unit (J1 pin 8) via IC17 (IF unit) instead of AF signals.

The AF or IF signals pass through the analog switch (IC3 pins 1, 15) and are applied to the A/D converter (IC8). The digital signal is demodulated (5th IF signal) by the PSN method at IC14 and digitally manipulated at IC15. The resulting digital signal is then converted into an analog signal at the D/A converter (IC9).

The converted signal passes through the limiter-amplifier (IC10a) and an analog switch (IC3 pins 13, 14). The signal is amplified at the limiter-amplifier (IC4a), passes through the active low-pass filters (IC5a, IC5b) and is then applied to the switched capacitor filters (IC6, IC7). The cut-off frequencies of IC6 and IC7 can be programmed. The resulting signal passes through IC10b and IC3 (pins 3, 4) and is applied to the AF selector (IC16) in the IF unit.

4-6-2 DSP TRANSMITTING (DSP UNIT, IC-775DSP only)

When transmitting with the DSP function ON, microphone signals are applied to the DSP unit (J1 pin 4) via the AF selector (IF unit IC9).

The AF signals pass through the analog switch (IC3 pins 12, 14), the limiter-amplifier (IC4a), the active low-pass filters (IC5a, IC5b) and are then applied to the switched capacitor filters (IC6, IC7). The cut-off frequencies of IC6 and IC7 can be programmed. The resulting AF signal passes through IC10b and IC3 (pins 4/5, 2/15) and is then converted into a digital signal at the A/D converter (IC8).

The digital signal is modulated by the PSN method at IC14 and digitally manipulated at IC15. The resulting digital signal is then converted into an analog signal at the D/A converter (IC9).

The converted signal passes through the limiter-amplifier (IC10a), filtered at the active high-pass filter (IC11), amplified at IC4b and is applied to the AF selector (IC9) in the IF unit.

ManualsPlus.com

SECTION 5 ADJUSTMENT PROCEDURES

5-1 PREPARATION BEFORE SERVICING

■ REQUIRED TEST EQUIPMENT

EQUIPMENT	GRADE AND RANGE
RF power meter (terminated type)	Measuring range : 10 - 300 W Frequency range : 1.8 - 30 MHz Impedance : 50 Ω SWR : Less than 1.2 : 1
Frequency counter	Frequency range : 0.1 - 100 MHz Frequency accuracy : ±1 ppm or better Sensitivity : 100 mV or berrer
RF voltmeter	Frequency range : 0.1 - 100 MHz Measuring range : 0.01 - 10 V
Digital multimeter	Input impedance : 10 MΩ/DC or better
Standard signal generator (SSG)	Frequency range : 0.1 - 100 MHz Output level : 0.1 μV - 32 mV : (–127 to –17 dBm)
Distortion meter	Frequency range : 1 kHz ±10% Measuring range : 1-100%
Oscilloscope	Frequency range : DC - 100 MHz Measuring range : 0.01 - 10 V

EQUIPMENT	GRADE AND RANGE
AC millivoltmeter	Measuring range : 10 mV - 10 V
DC voltmeter	Input impedance : 50 kΩ/DC or better
Ammeter	Measurement capability : 1 A and 30 A
Audio generator	Frequency range : 300 - 3000 Hz Output level : 1 - 500 mV
Attenuator	Power attenuation : 50 or 60 dB Capacity : 150 W or more
Spectrum analyzer	Frequency range : At least 90 MHz Spectrum bandwidth : ±100 kHz or more
FM deviation meter	Frequency range : At least 30 MHz Measuring range : 0 to ±10 kHz
Modulation analyzer	Frequency range : At least 30 MHz Measuring range : 0 - 100%
External speaker	Impedance : 8 Ω Max. input power : 5 W
Terminator	Resistance : 50 and 150 Ω Capacity : 150 W or more

■ CONNECTION

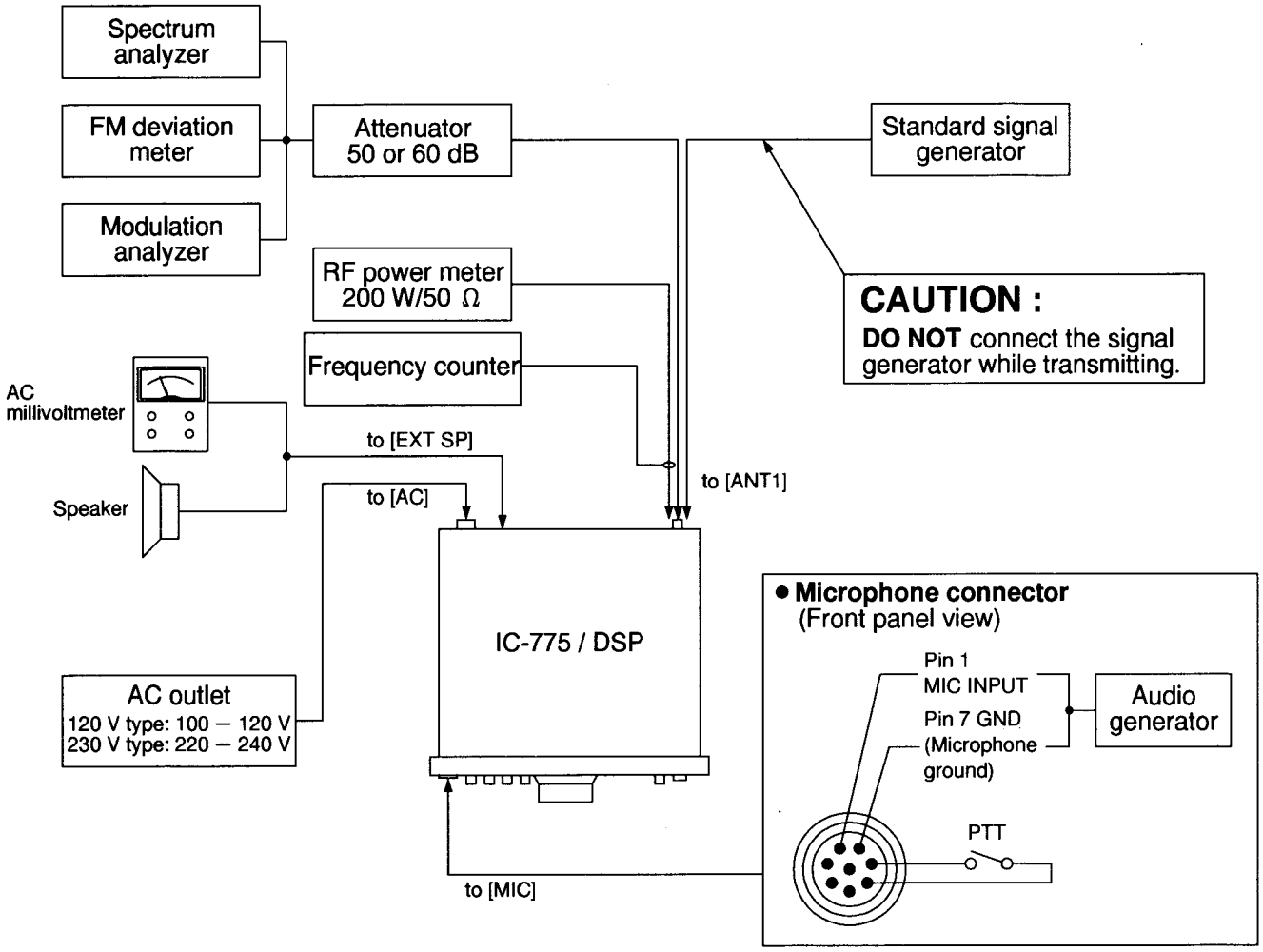

ManualsPlus.com

5-2 PLL ADJUSTMENT

ADJUSTMENT		ADJUSTMENT CONDITIONS	MEASUREMENT		VALUE	ADJUSTMENT POINT	
			UNIT	LOCATION		UNIT	ADJUST
REFERENCE FREQUENCY	1	• Displayed frequency: Any • R360 (PLL unit) : Center • Receiving	PLL	Connect a frequency counter to P3.	60.000000 MHz	PLL	L4
	2			Connect an RF voltmeter to P3.	Maximum level (0 dBm or more)		L6, L7
PLL-A REFERENCE LOOP LOCK VOLTAGE	1	• Displayed frequency: 7.99999 MHz • Mode : USB • Receiving	PLL	Connect a digital multi-meter or oscilloscope to R46.	3.2 V	PLL	C47
PLL-A MAIN LOOP LOCK VOLTAGE	1	• Displayed frequency: 7.99999 MHz • Receiving	PLL	Connect a digital multi-meter or oscilloscope to J12.	6.5 V	PLL	C86
	2	• Displayed frequency: 14.99999 MHz			6.5 V		C96
	3	• Displayed frequency: 21.99999 MHz			6.5 V		C107
	4	• Displayed frequency: 29.99999 MHz			6.5 V		C117
PLL-B REFERENCE LOOP LOCK VOLTAGE	1	• SPLIT : ON • Main frequency readout: 7.999999 MHz • Mode : USB • Receiving	PLL	Connect a digital multi-meter or oscilloscope to R141.	3.2 V	PLL	C169
PLL-B MAIN LOOP LOCK VOLTAGE	1	• SPLIT : ON • Main frequency readout: 7.999999 MHz • Receiving	PLL	Connect a digital multi-meter or oscilloscope to J14.	6.5 V	PLL	C205
	2	• Main frequency readout: 14.999999 MHz			6.5 V		C218
	3	• Main frequency readout: 21.999999 MHz			6.5 V		C229
	4	• Main frequency readout: 29.999999 MHz			6.5 V		C239

ManualsPlus.com

● **PLL UNIT**

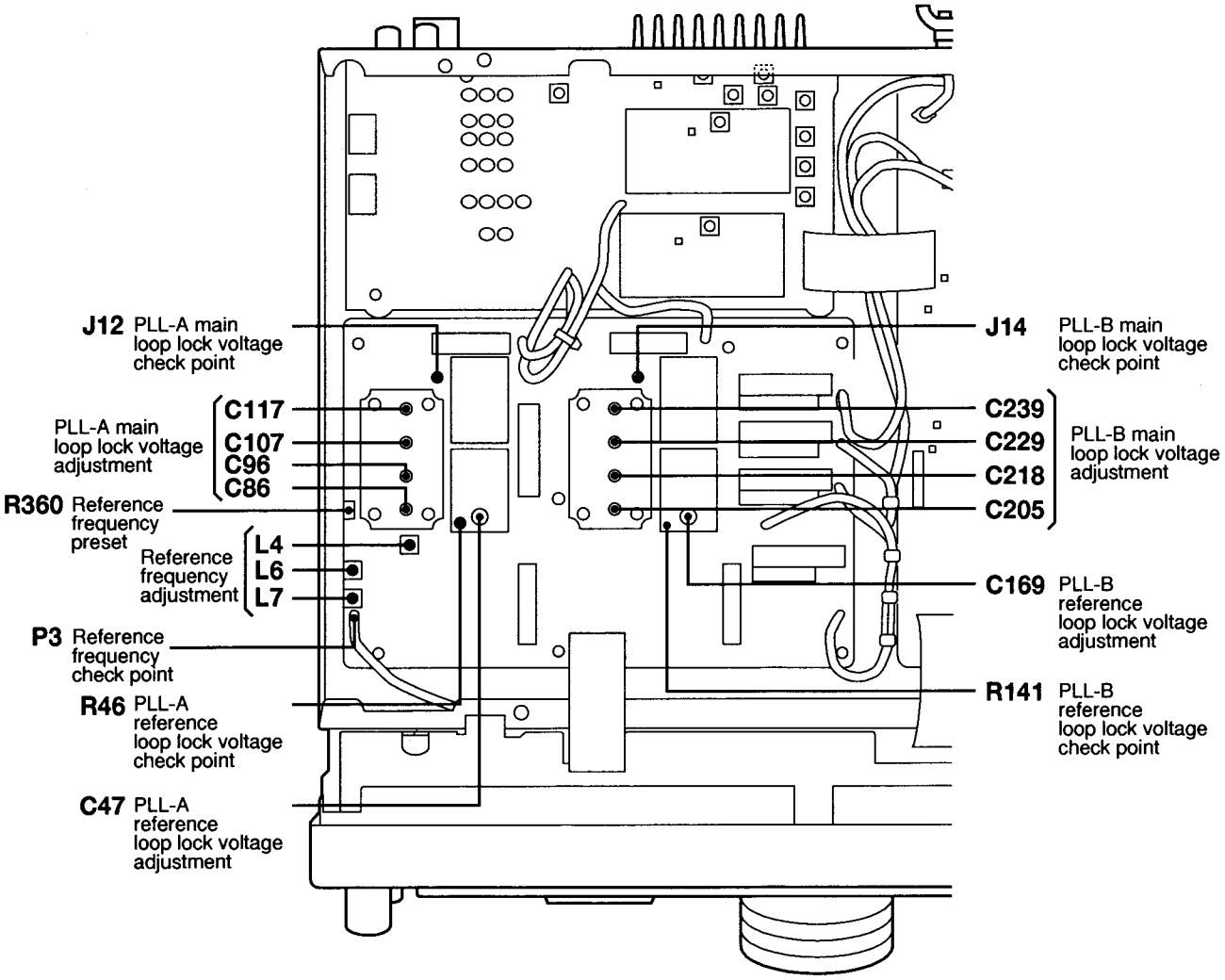

ManualsPlus.com

5-3 RECEIVER ADJUSTMENT

ADJUSTMENT		ADJUSTMENT CONDITIONS	MEASUREMENT		VALUE	ADJUSTMENT POINT	
			UNIT	LOCATION		UNIT	ADJUST
AGC VOLTAGE	1	• Displayed frequency: 14.100000 MHz • Mode : USB • [PREAMP/ATT] : PRE 1 • [METER] : Po • [ANT] : 1 • [TUNER] : OFF • [AGC] : Max. counterclockwise • [DRIVE] : Max. clockwise • [NB] : OFF • [COMP] : OFF • [RF] : Max. clockwise • [TONE] : Center • [SQL] : Max. counterclockwise • [MIC] : Center • [PWR] : Max. clockwise • [MONI GAIN] : Center • [MIC TONE] : Center • [ANTI-VOX] : Center • [VOX-GAIN] : Center • [VOX] : OFF • [MONITOR] : OFF • [DUALWATCH] : OFF • [SPLIT] : OFF • [TWIN PBT] : Center • [APF] : OFF • [NOTCH] : OFF • [RIT] : OFF • [ΔTX] : OFF • S2 (IF unit) : ON • Receiving	IF	Connect a digital multi-meter or oscilloscope to CP1.	2.40 V	IF	R439
RX PEAK	1	• Displayed frequency: 14.100000 MHz • Mode : FM • [PREAMP/ATT] : OFF • [AGC OFF] : OFF (AGC activates) • [ANT] : 1 • R24 (RF unit) : Center • R50 (RF unit) : Center • Connect a standard signal generator to [ANT1] and set as: Frequency : 14.100000 MHz Level : 10 µV * (–87 dBm) Modulation: FM 1 kHz Deviation : ±7.5 kHz	Front panel	S/RF meter	Maximum level	RF	Adjust repeatedly L41, L51, L56, L55, L54
	2	• [AGC OFF] : ON (AGC deactivates) • Set the standard signal generator as: Level : 3.2 µV * (–97 dBm)	Rear panel	Connect a distortion meter to [EXT SP] jack.	Minimum distortion level		L51, L56, L55, L54
	3	• Displayed frequency: 100 kHz • [AGC OFF] : OFF (AGC activates) • Mode : USB • Apply no signal to the antenna connector.		Connect an AC millivolt-meter to [EXT SP] jack with an 8 Ω dummy load.	Minimum noise level		R50
RECEIVER TOTAL GAIN	1	• Same settings as "AGC VOLTAGE" • Connect a standard signal generator to [ANT1] and set as: Frequency : 14.101500 MHz Level : 0.5 µV * (–113 dBm) Modulation: OFF	Rear panel	Connect an AC millivolt-meter to [EXT SP] jack with an 8 Ω dummy load.	Maximum audio output level	IF	Adjust in sequence L3, L4, L5, L6, L12, L14, L15, L19, L36, L20, L21
	2	• [PREAMP/ATT] : OFF • Set the standard signal generator as: Level : 0.5 mV * (–53 dBm) and OFF			30 dB (32 mV) of AF level difference	IF	R198

* This output level of the standard signal generator (SSG) is indicated as SSG's open circuit.

ManualsPlus.com

● IF AND RF UNITS

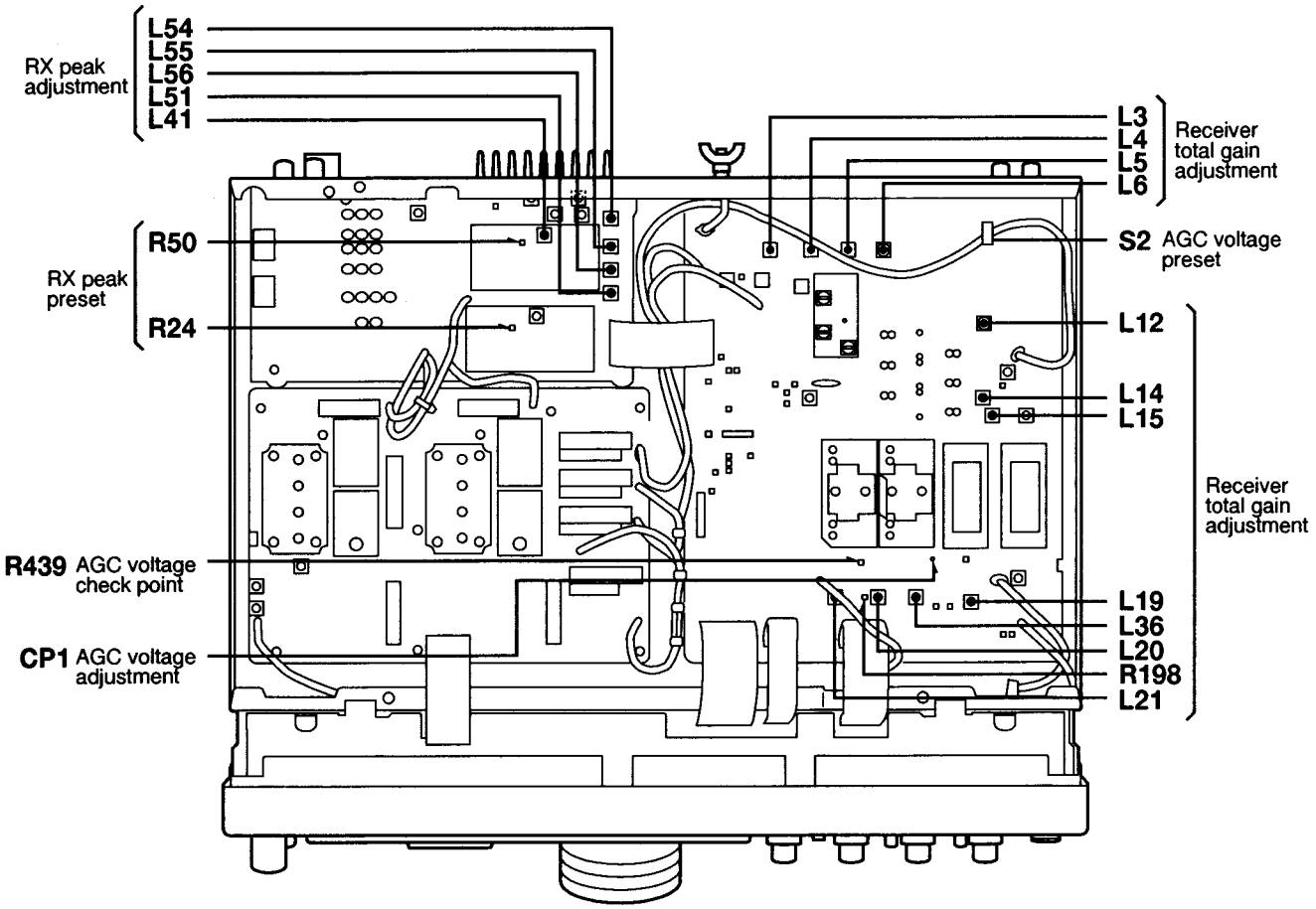

ManualsPlus.com

RECEIVER ADJUSTMENT (CONTINUED)

ADJUSTMENT		ADJUSTMENT CONDITIONS	MEASUREMENT		VALUE	ADJUSTMENT POINT	
			UNIT	LOCATION		UNIT	ADJUST
DUALWATCH	1	• [SPLIT] : ON • Main frequency readout: 14.100000 MHz • Mode : USB • [PREAMP/ATT] : OFF • [ANT] : 1 • Connect a standard signal generator to [ANT1] and set as: Frequency : 14.101500 MHz Level : 1 µV * (–107 dBm)	Rear panel	Connect an AC millivolt-meter to [EXT SP] jack with an 8 Ω dummy load.	Maximum audio output level	RF	L16
	2	• Main frequency readout: 100 kHz • Apply no signal to the antenna connector.			Minimum noise level		R24
PREAMP 2	1	• Displayed frequency: 23.000000 MHz • Mode : USB • [PREAMP/ATT] : PRE 2 • [ANT] : 1 • Connect a standard signal generator to [ANT1] and set as: Frequency : 23.001500 MHz • Receiving	Rear panel	Connect an AC millivolt-meter to [EXT SP] jack with an 8 Ω dummy load.	Maximum audio output level	RF	L80
NOTCH	1	• Same settings as "AGC VOLTAGE" • [NB] : OFF • [NOTCH] : ON • Connect a standard signal generator to [ANT1] and set as: Frequency : 14.101500 MHz Level : 10 mV * (–27 dBm)	Front panel	S/RF meter	Minimum level	Front panel	[NOTCH] control
	2				Minimum level (–45 dB or more from Notch OFF)	IF	C125, R193
NOISE BLANKER	1	• Same setting as "AGC VOLTAGE" • [NB WIDE] : OFF • [PREAMP/ATT] : OFF • Connect a standard signal generator to [ANT1] and set as: Frequency : 14.101500 MHz Level : 10 µV * (–87 dBm) Add the following signal into the signal generator output. 100 msec. 1 msec.	IF	Connect an oscilloscope to CP2.	Maximum voltage	IF	L9, L10, L11
METER SCALE	1	• [RF] : Max. clockwise • [SQL] : 3 o'clock position • Receiving	Front panel	S/RF meter	S9 + 30 dB	DIS-PLAY	R3
S-METER	1	• Same setting as "AGC VOLTAGE" • [PREAMP/ATT] : OFF • Connect a standard signal generator to [ANT1] and set as: Level : 50 µV * (–73 dBm)	Front panel	S/RF meter	S9	IF	R386
	2	• Set the standard signal generator as: Level : 50 mV * (–13 dBm)			S9 + 60 dB		R453
FM SQUELCH	1	• Displayed frequency: 29.100000 MHz • Mode : FM • [PREAMP/ATT] : PRE 2 • Apply no signal to the antenna connector.	Top panel	Speaker	Squelch just closes.	Front panel	[SQL] control
	2	• Connect a standard signal generator to [ANT1] and set as: Frequency : 29.100000 MHz Level : 0.16 µV * (–123 dBm)			Squelch just opens.	IF	R233

* This output level of the standard signal generator (SSG) is indicated as SSG's open circuit.

ManualsPlus.com

• IF AND RF UNITS

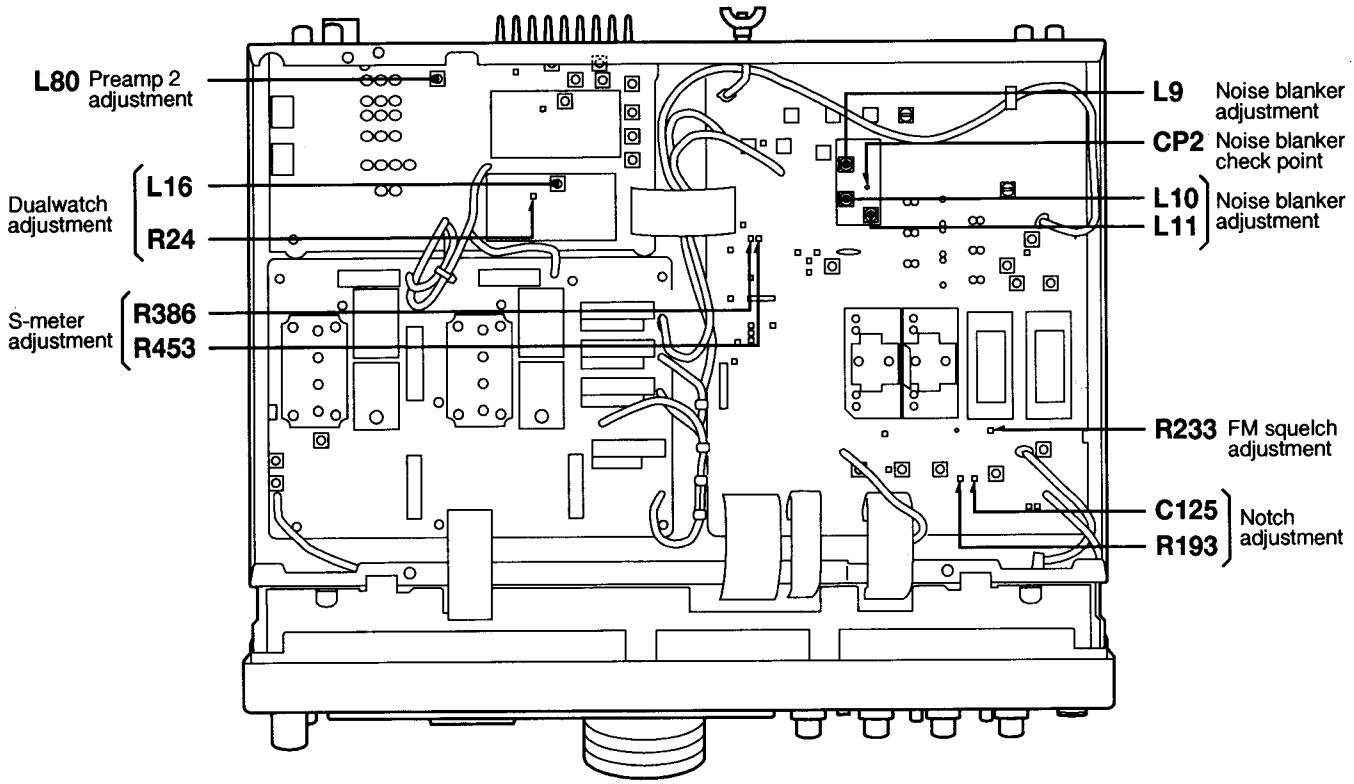

• DISPLAY UNIT

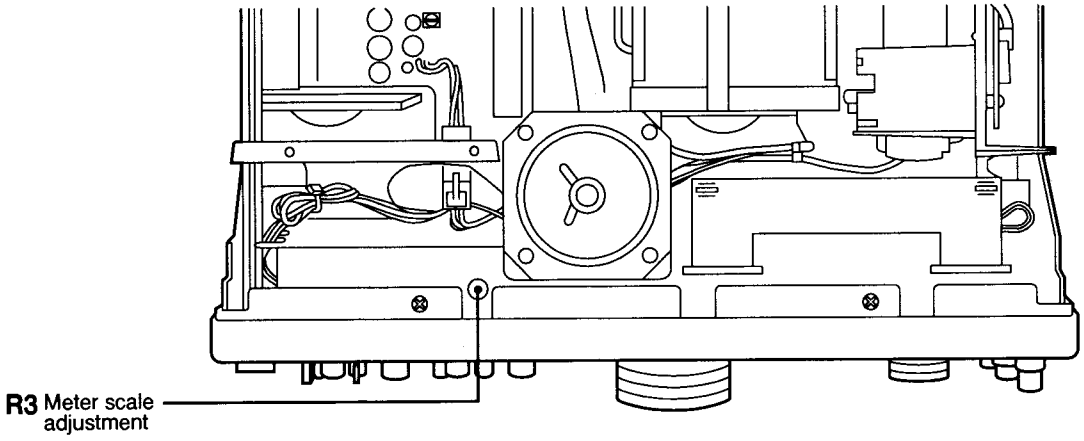

ManualsPlus.com

5-4 TRANSMITTER ADJUSTMENT

ADJUSTMENT		ADJUSTMENT CONDITIONS	MEASUREMENT		VALUE	ADJUSTMENT POINT	
			UNIT	LOCATION		UNIT	ADJUST
IDLING CURRENT	1	• Displayed frequency: 14.100000 MHz • Mode : USB • [PWR] control : Maximum • [MIC] control : Minimum • R9 (PA unit) : Max. counterclockwise • R18 (PA unit) : Max. counterclockwise • R21 (PA unit) : Max. counterclockwise • Transmitting	PA	Connect a DC ammeter between the connector (W5; one of red wires) and REG unit. Connect a jumper wire between black cables.	100–200 mA	DC ammeter	Verify
(for drive amplifiers)	2				150 mA increase from step 1	PA	R9
(for final amplifiers)	3				50 mA increase from step 2		R18
	4				250 mA increase from step 3		R21
	5				200 mA increase from step 4		R18
CARRIER SUPPRESSION	1	• Displayed frequency: 14.100000 MHz • Mode : USB and LSB • [ANT] : 1 • Apply no signal to [MIC] connector. • Transmitting	Rear panel	Connect a spectrum analyzer to [ANT1].	Minimum level	IF	R273, R274
TRANSMIT LEVEL	1	• Displayed frequency: 14.100000 MHz • Mode : RTTY • [DRIVE] : Max. clockwise • [PWR] control : Max. clockwise • R80 (RF unit) : Center • Transmitting	RF	Terminate J8 to ground with a 50 Ω resistor. Connect an RF voltmeter to J8.	Maximum output	RF	Adjust in sequence L57, L161, L60, L58
MIXER BALANCE	1	• Displayed frequency: 24.900000 MHz and 14.100000 MHz • Mode : FM • [ANT] : 1 • Transmitting	Rear panel	Connect a spectrum analyzer to [ANT1] via an attenuator.	Minimum adjacent spurious level on the both frequencies	RF	R80
TRANSMIT TOTAL GAIN	1	• Displayed frequency: 14.100000 MHz • Mode : USB • [MIC] control : Center • [COMP] : OFF • [MIC TONE] : Center • [ANT] : 1 • Connect an audio generator to [MIC] connector and set as: Frequency : 1.5 kHz Level : 3 mV • Transmitting	Rear panel	Connect an RF power meter to [ANT1].	Maximum output level	IF	Adjust in sequence L18, L7, L39, L8
	2				100 W		R23
OUTPUT POWER	1	• Displayed frequency: 14.100000 MHz • Mode : USB • [ANT] : 1 • Connect an audio generator to [MIC] connector and set as: Level : 30 mV • Transmitting	Rear panel	Connect an RF power meter to [ANT1].	200 W	IF	R364
	2	• Mode : AM • MIC gain [MIC] : Minimum • Apply no signal to [MIC] connector.			55 W		R362
COMP AMPLIFIER	1	• Displayed frequency: 14.100000 MHz • Mode : USB • [COMP] : ON • [DRIVE] : Max. clockwise • [ANT] : 1 • Connect an audio generator to [MIC] connector and set as: Level : 3 mV • Transmitting	Rear panel	Connect an RF power meter to [ANT1].	50 W	Front panel	MIC gain control [MIC]
	2				Maximum output level	IF	L16, L17

ManualsPlus.com

• IF AND RF UNITS

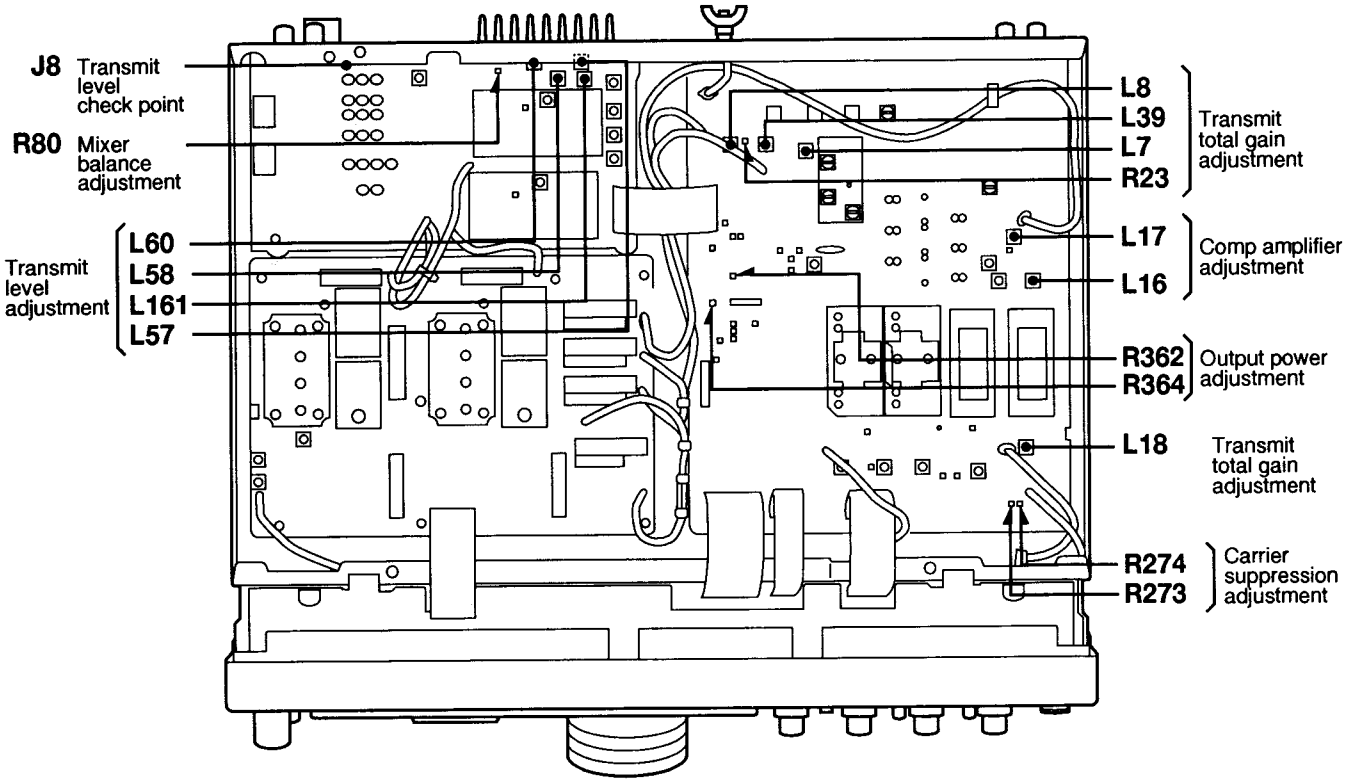

• PA UNIT

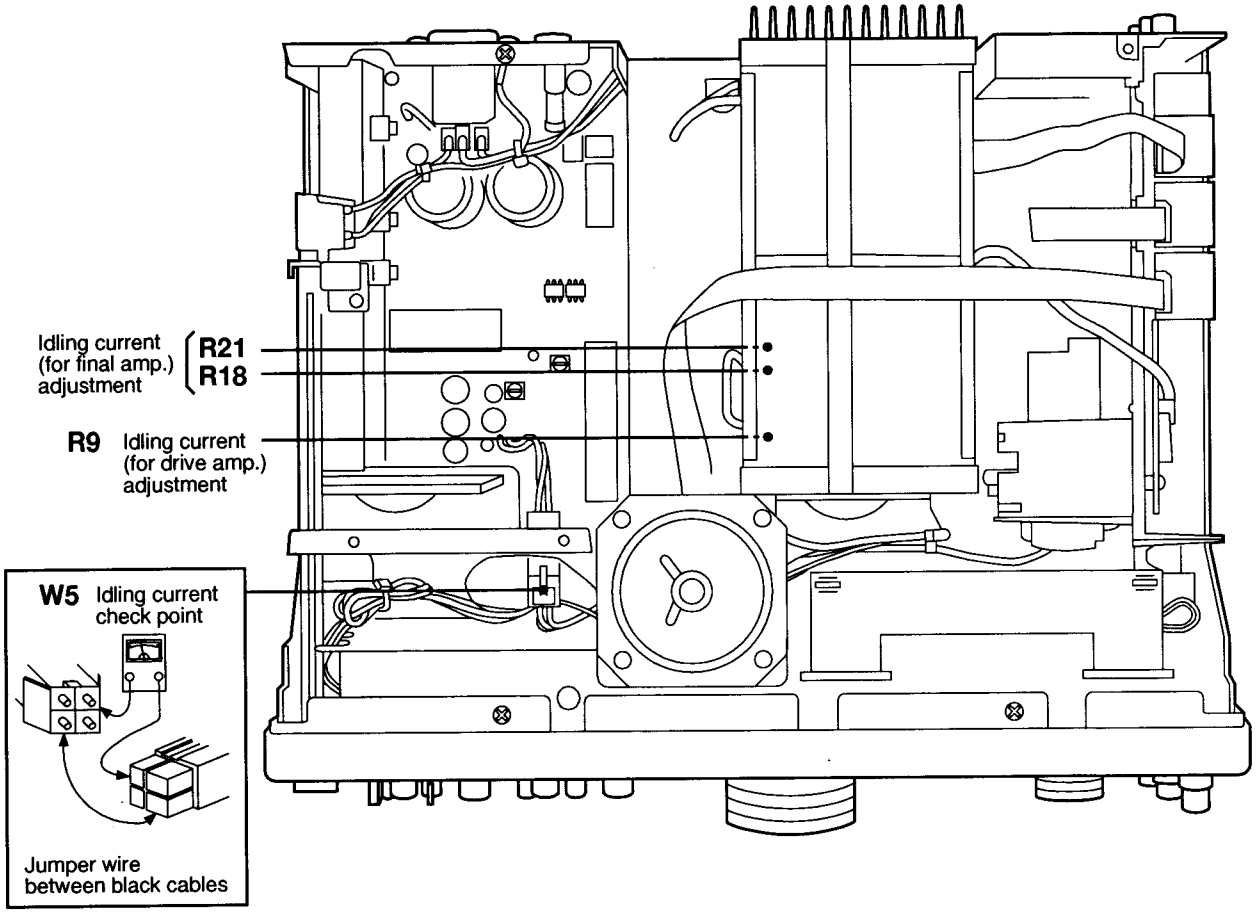

ManualsPlus.com

TRANSMITTER ADJUSTMENT (CONTINUED)

ADJUSTMENT		ADJUSTMENT CONDITIONS	MEASUREMENT		VALUE	ADJUSTMENT POINT	
			UNIT	LOCATION		UNIT	ADJUST
P_O METER	1	• Displayed frequency: 14.100000 MHz • Mode : RTTY • [METER] : P_O • [PWR] control : Maximum • Transmitting	Front panel	S/RF meter (P_O scale)	200 W	IF	R457
I_D METER	1	• Displayed frequency: 14.100000 MHz • Mode : USB • [METER] : I_D • Apply no signal to [MIC] connector. • Transmitting	Front panel	S/RF meter (I_D scale)	0.5 A	IF	R318
	2	• Connect an audio generator to [MIC] connector and set as: Level : 30 mV • Connect a DC ammeter between the connector (PA unit W5; red wire) and REG unit.			DC ammeter value minus 0.5 A		R319
V_D METER	1	• Mode : USB • [METER] : V_D • Apply no signal to [MIC] connector. • Transmitting	Front panel	S/RF meter (V_D scale)	28 V	IF	R327
SWR METER	1	• Mode : RTTY • [METER] : SWR • Connect a 100 Ω load to [ANT1]. • Transmitting	Front panel	S/RF meter (SWR scale)	2	IF	R345
COMP METER	1	• Mode : USB • [COMP] : ON • [DRIVE] : Max. clockwise • [METER] : COMP • Connect an audio generator to [MIC] connector and set as: Level : 3 mV	Front panel	S/RF meter (COMP scale)	Pointer just swings.	Front panel	MIC gain control [MIC]
	2	• Set the audio generator as: Level : 30 mV			20 dB	IF	R458
ALC METER	1	• Mode : USB • [METER] : ALC • [MIC] control : Center • Connect an audio generator to [MIC] connector and set as: Level : 30 mV • Transmitting	Front panel	S/RF meter (ALC scale)	Maximum position in the ALC zone	IF	R379
I_D APC	1	• Mode : USB • Ground pin 6 of J24 on the IF unit with a wire. • Connect an audio generator to [MIC] connector and set as: Level : 30 mV • Transmitting	PA	Connect a DC ammeter between the connector (W5; one of red wires) and REG unit. Connect a jumper wire between black cables.	18 A	IF	R320
		After I_D APC adjustment, remove the wire from J24.					
RTTY TRANSMIT GAIN	1	• Mode : RTTY • [DRIVE] : Center • [METER] : ALC • Transmitting	Front panel	S/RF meter (ALC scale)	Maximum position in the ALC zone	IF	R147
FM OSCILLATOR	1	• Displayed frequency: 14.100000 MHz • Mode : FM • [ANT] : 1 • Apply no signal to [MIC] connector. • Connect a 50 Ω dummy load to [ANT1]. • Transmitting	Rear panel	Loosely couple a frequency counter to [ANT1].	Same as the displayed frequency	IF	L22

ManualsPlus.com

• IF UNIT

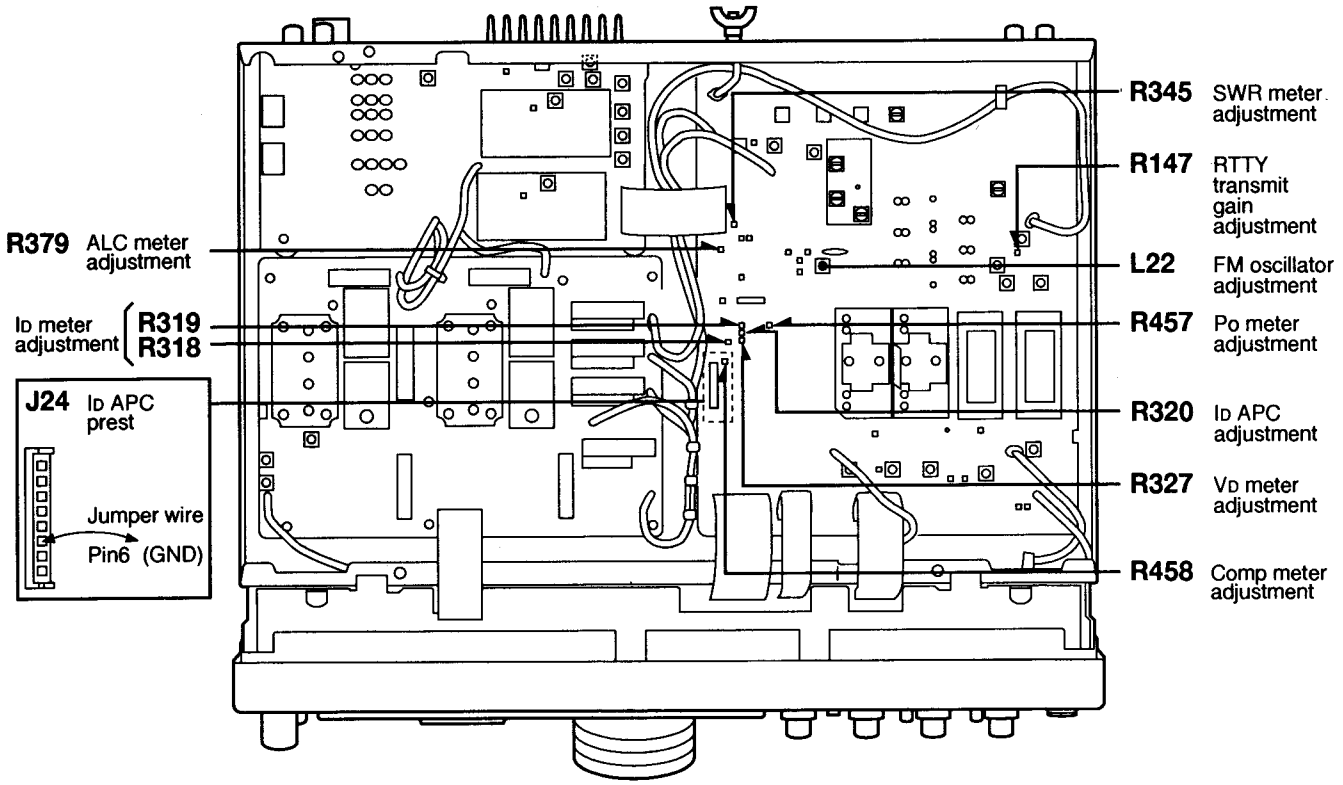

• PA UNIT

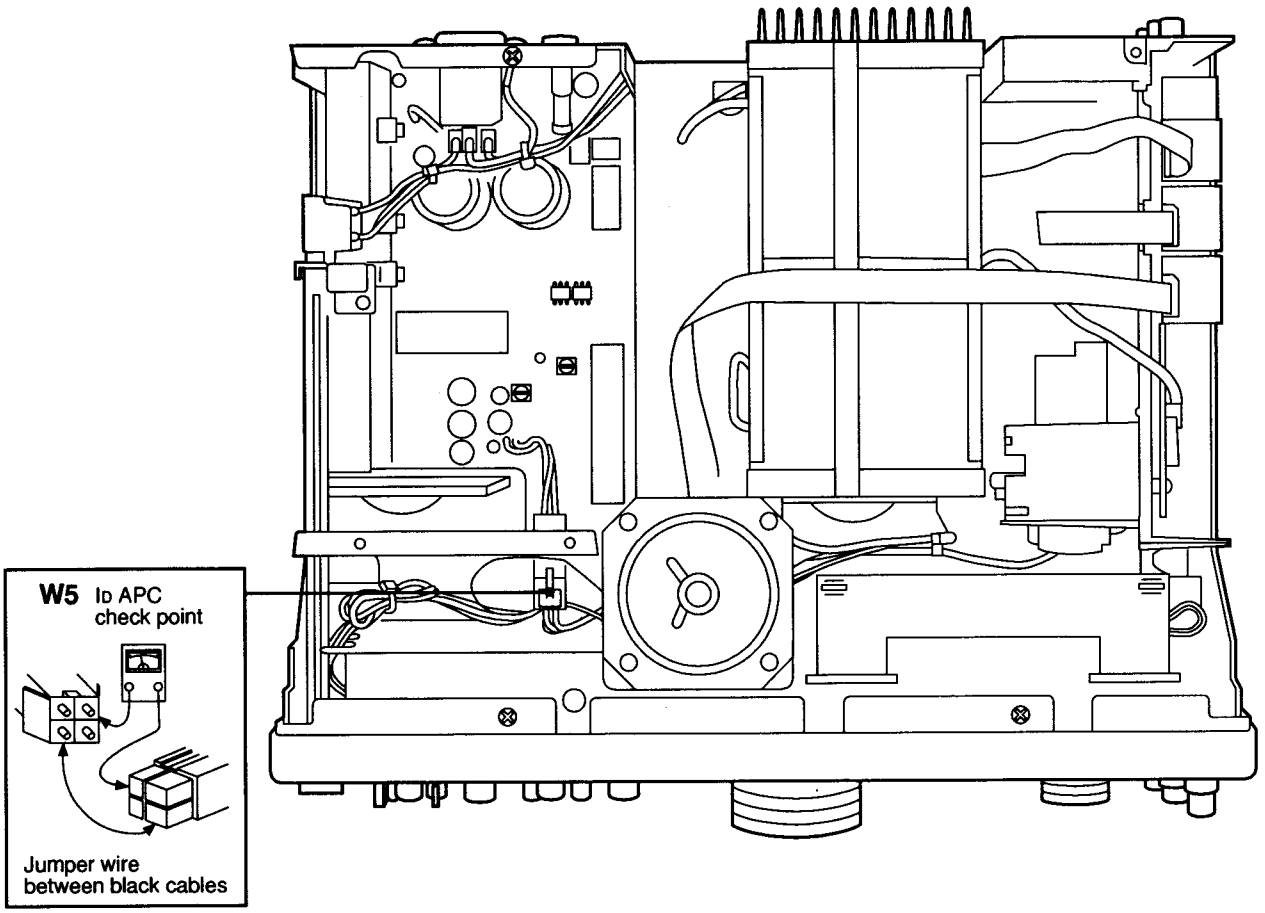

ManualsPlus.com

TRANSMITTER ADJUSTMENT (CONTINUED)

ADJUSTMENT		ADJUSTMENT CONDITIONS	MEASUREMENT		VALUE	ADJUSTMENT POINT	
			UNIT	LOCATION		UNIT	ADJUST
FM CARRIER LEVEL	1	• Mode : FM • Transmitting	IF	Connect an oscilloscope to CP4.	100 mVp-p of the carrier waveform	IF	R297
FM DEVIATION	1	• Mode : FM • [MIC] control : Center • [MIC TONE] : Center • [ANT] : 1 • Connect an audio generator to [MIC] connector and set as: Frequency : 1 kHz Level : 30 mV • Transmitting	Rear panel	Connect an FM deviation meter to [ANT1] via an attenuator.	± 4.8 kHz	IF	R292
	2	• Set the audio generator as: Level : 3 mV			± 3.5 kHz	IF	R281
	3	Repeat steps 1 and 2 several times.					
RESIDUAL AM	1	• Mode : FM • [MIC] control : Maximum • [PWR] control : Maximum • [ANT] : 1 • Connect an audio generator to [MIC] connector and set as: Frequency : 1 kHz Level : 30 mV • Transmitting	Rear panel	Connect an RF power meter to [ANT1].	Maximum level	IF	L7, L39
		NOTE: After this adjustment, adjust again R23 (see TRANSMIT TOTAL GAIN adjustment).					
AM MODULATION	1	• Mode : AM • [ANT] : 1 • Connect an audio generator to [MIC] connector and set as: Frequency : 1 kHz Level : 30 mV • Transmitting	Rear panel	Connect a modulation analyzer to [ANT1] via an attenuator.	Maximum modulation	Audio generator	Frequency
	2				95% modulation	IF	R294

ManualsPlus.com

● **IF UNIT**

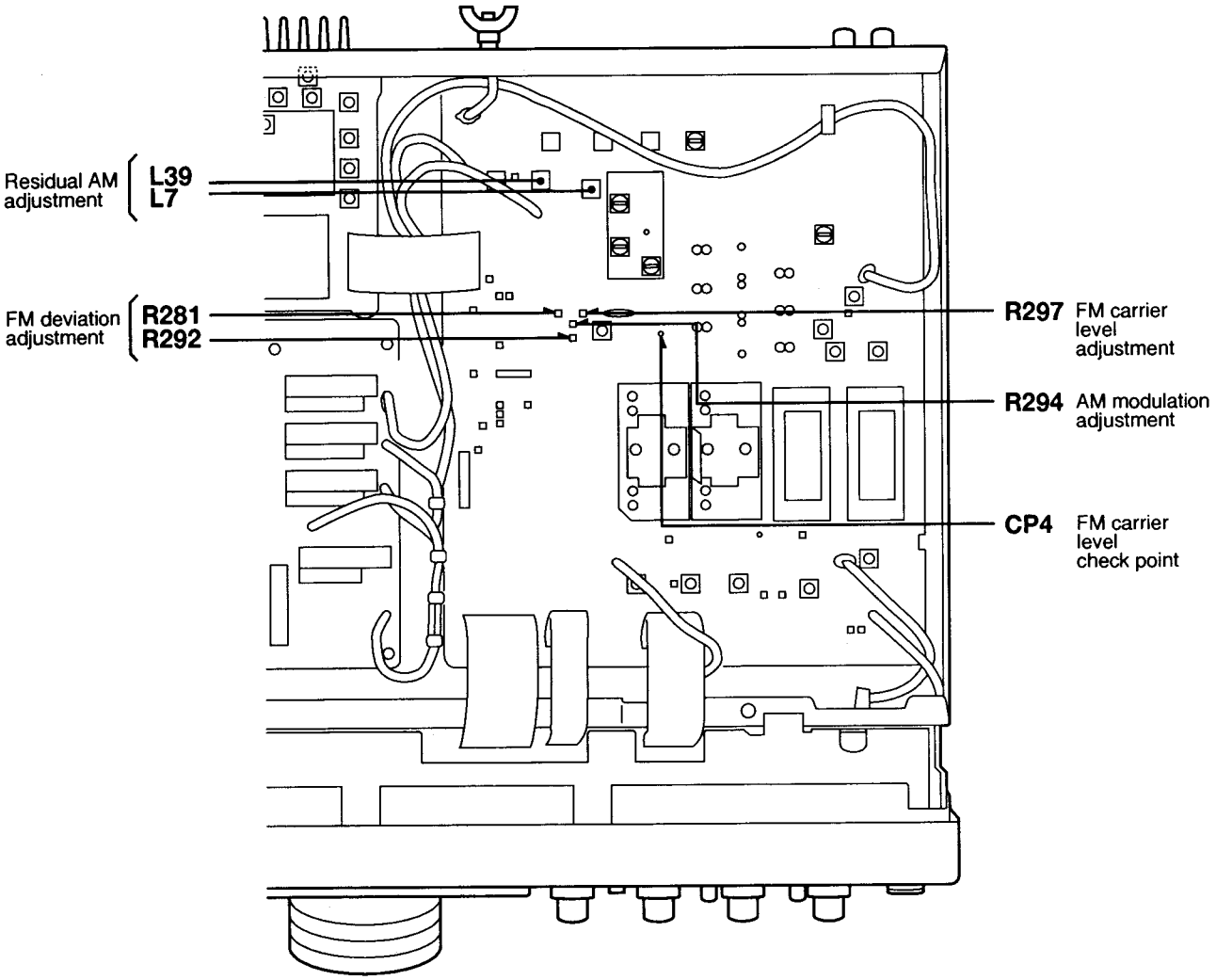

ManualsPlus.com

5-5 TUNER UNIT ADJUSTMENT

ADJUSTMENT		ADJUSTMENT CONDITIONS	MEASUREMENT		VALUE	ADJUSTMENT POINT	
			UNIT	LOCATION		UNIT	ADJUST
DETECTION VOLTAGE	1	• Displayed frequency : 28.000000 MHz • Mode : FM • SW1 (CTRL unit) : SET • Connect a 50 Ω dummy load to [ANT1] connector. • Ground J13 on the CTRL unit with a wire. • [PWR] control : Maximum • Transmitting	CTRL	Connect a digital multi-meter or oscilloscope to CP1.	Minimum voltage	CTRL	C134
	2	• Turn power OFF, then turn power ON again while pushing [NB], [ENT] and [TUNER].	Front panel	Function display	"PUSH" is displayed.		Verify
	3	• Push [TUNER] while indicating "PUSH" to memorize the reference voltage.			"END" is displayed after automatic trans-mission.		Verify
		NOTE: After tuner adjustment, reset SW1 to "USE," then remove the wire from J13.					

• CTRL UNIT

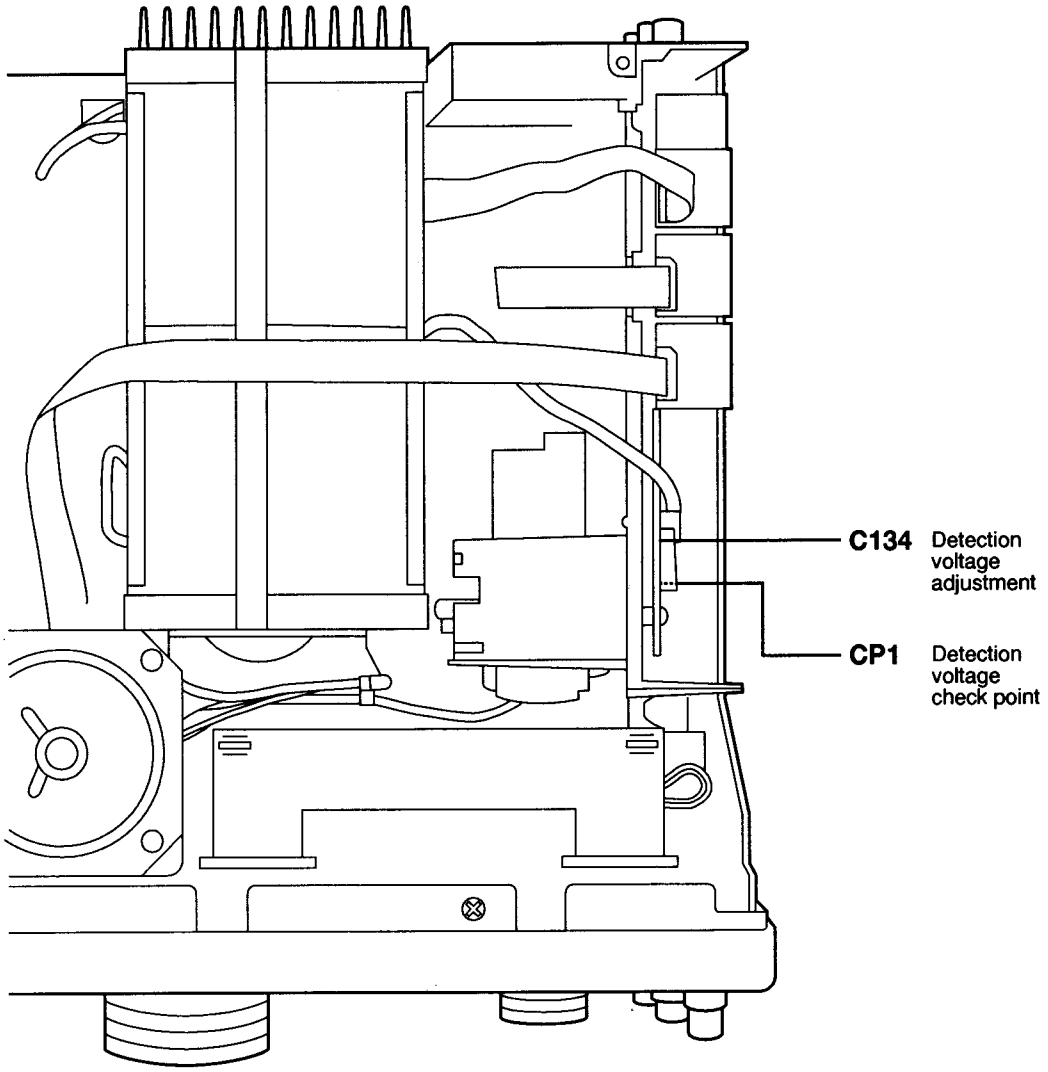

ManualsPlus.com

SECTION 6 PARTS LIST

[DISPLAY UNIT]

REF. NO.	ORDER NO.	DESCRIPTION	
IC1	1130007780	S.IC	LC75821E
IC2	1130007780	S.IC	LC75821E
R1	7030003640	S.RESISTOR	ERJ3GEYJ 473 V (47 kΩ)
R2	7030003640	S.RESISTOR	ERJ3GEYJ 473 V (47 kΩ)
R3	7310003820	TRIMMER	EVN-D2AA03 B14
R4	7030003530	S.RESISTOR	ERJ3GEYJ 562 V (5.6 kΩ)
C1	4030009580	S.CERAMIC	C1608 JB 1H 681K-T-A
C2	4030010070	S.CERAMIC	C1608 X7S 1C 104K-T-A
C3	4030009580	S.CERAMIC	C1608 JB 1H 681K-T-A
C4	4030010070	S.CERAMIC	C1608 X7S 1C 104K-T-A
DS1	5030001150	LCD	HLC8617-012210
DS2	5080000340	CFL	HMB S 6 A1W 300B ASSY
J1	6510017650	CONNECTOR	52045-1045
J3	6510017870	CONNECTOR	SB02P-HVQ-S
WS1	8600034180	CABLE	SX1528 P01✱J02DI
EP1	0910043692	PCB	B 4301B
EP2	0910043682	PCB	B 4300B

[SW-A UNIT]

REF. NO.	ORDER NO.	DESCRIPTION	
IC1	1130001920	S.IC	μPD4071BG-T1
IC2	1130002860	S.IC	μPD4030BG-T1
IC3	1130001920	S.IC	μPD4071BG-T1
IC4	1130002860	S.IC	μPD4030BG-T1
IC5	1130005120	S.IC	TC74HC74AF (TP1)
IC6	1130002860	S.IC	μPD4030BG-T1
IC7	1130007710	S.IC	MB88101APFV-G-BND
IC8	1140005220	S.IC	HD6433834A35H
Q1	1520000530	S.TRANSISTOR	2SB1119S-TD
Q2	1530002840	S.TRANSISTOR	2SC4116-Y (TE85R)
Q3	1590000680	S.TRANSISTOR	DTC114EU T107
Q4	1590000680	S.TRANSISTOR	DTC114EU T107
Q5	1590000680	S.TRANSISTOR	DTC114EU T107
Q6	1590000680	S.TRANSISTOR	DTC114EU T107
Q7	1590000680	S.TRANSISTOR	DTC114EU T107
Q8	1590000680	S.TRANSISTOR	DTC114EU T107
Q9	1590000680	S.TRANSISTOR	DTC114EU T107
Q10	1590000680	S.TRANSISTOR	DTC114EU T107
Q11	1590000680	S.TRANSISTOR	DTC114EU T107
Q12	1590000680	S.TRANSISTOR	DTC114EU T107
Q13	1590000680	S.TRANSISTOR	DTC114EU T107
Q14	1590000680	S.TRANSISTOR	DTC114EU T107
Q15	1590000680	S.TRANSISTOR	DTC114EU T107
Q16	1590000680	S.TRANSISTOR	DTC114EU T107
Q17	1590000680	S.TRANSISTOR	DTC114EU T107
Q18	1590000680	S.TRANSISTOR	DTC114EU T107
Q19	1590000680	S.TRANSISTOR	DTC114EU T107
Q20	1590000680	S.TRANSISTOR	DTC114EU T107
Q21	1590000680	S.TRANSISTOR	DTC114EU T107
Q22	1590000680	S.TRANSISTOR	DTC114EU T107

[SW-A UNIT]

REF. NO.	ORDER NO.	DESCRIPTION	
Q23	1590000680	S.TRANSISTOR	DTC114EU T107
Q24	1590000680	S.TRANSISTOR	DTC114EU T107
Q25	1590000680	S.TRANSISTOR	DTC114EU T107
Q26	1590000680	S.TRANSISTOR	DTC114EU T107
D1	1750000270	S.DIODE	1SS301 (TE85R)
D2	1750000270	S.DIODE	1SS301 (TE85R)
D3	1750000270	S.DIODE	1SS301 (TE85R)
D4	1750000270	S.DIODE	1SS301 (TE85R)
D6	1750000270	S.DIODE	1SS301 (TE85R)
D8	1750000270	S.DIODE	1SS301 (TE85R)
D10	1750000270	S.DIODE	1SS301 (TE85R)
D12	1750000270	S.DIODE	1SS301 (TE85R)
D13	1750000290	S.DIODE	1SS300 (TE85R)
D14	1750000290	S.DIODE	1SS300 (TE85R)
D15	1750000290	S.DIODE	1SS300 (TE85R)
D16	1750000290	S.DIODE	1SS300 (TE85R)
D17	1750000290	S.DIODE	1SS300 (TE85R)
D18	1750000290	S.DIODE	1SS300 (TE85R)
D25	1750000290	S.DIODE	1SS300 (TE85R)
D26	1750000290	S.DIODE	1SS300 (TE85R)
D27	1750000290	S.DIODE	1SS300 (TE85R)
D28	1750000290	S.DIODE	1SS300 (TE85R)
D29	1750000290	S.DIODE	1SS300 (TE85R)
D30	1750000290	S.DIODE	1SS300 (TE85R)
D31	1750000290	S.DIODE	1SS300 (TE85R)
D32	1750000290	S.DIODE	1SS300 (TE85R)
D33	1750000290	S.DIODE	1SS300 (TE85R)
D41	1750000290	S.DIODE	1SS300 (TE85R)
D42	1750000290	S.DIODE	1SS300 (TE85R)
D43	1750000290	S.DIODE	1SS300 (TE85R)
D44	1750000290	S.DIODE	1SS300 (TE85R)
D48	1750000270	S.DIODE	1SS301 (TE85R)
D49	1750000270	S.DIODE	1SS301 (TE85R)
X1	6050009290	S.CERAMIC	EFOS8004E5
R3	7030003680	S.RESISTOR	ERJ3GEYJ 104 V (100 kΩ)
R4	7030003800	S.RESISTOR	ERJ3GEYJ 105 V (1 MΩ)
R7	7030003680	S.RESISTOR	ERJ3GEYJ 104 V (100 kΩ)
R8	7030003800	S.RESISTOR	ERJ3GEYJ 105 V (1 MΩ)
R9	7030003580	S.RESISTOR	ERJ3GEYJ 153 V (15 kΩ)
R10	7030003640	S.RESISTOR	ERJ3GEYJ 473 V (47 kΩ)
R11	7030003580	S.RESISTOR	ERJ3GEYJ 153 V (15 kΩ)
R12	7030003720	S.RESISTOR	ERJ3GEYJ 224 V (220 kΩ)
R13	7030003800	S.RESISTOR	ERJ3GEYJ 105 V (1 MΩ)
R14	7030003680	S.RESISTOR	ERJ3GEYJ 104 V (100 kΩ)
R15	7030003720	S.RESISTOR	ERJ3GEYJ 224 V (220 kΩ)
R16	7030003680	S.RESISTOR	ERJ3GEYJ 104 V (100 kΩ)
R17	7030003800	S.RESISTOR	ERJ3GEYJ 105 V (1 MΩ)
R18	7030003680	S.RESISTOR	ERJ3GEYJ 104 V (100 kΩ)
R19	7030003720	S.RESISTOR	ERJ3GEYJ 224 V (220 kΩ)
R20	7030003680	S.RESISTOR	ERJ3GEYJ 104 V (100 kΩ)
R21	7030003800	S.RESISTOR	ERJ3GEYJ 105 V (1 MΩ)
R22	7030003580	S.RESISTOR	ERJ3GEYJ 153 V (15 kΩ)
R23	7030003600	S.RESISTOR	ERJ3GEYJ 223 V (22 kΩ)
R24	7030003580	S.RESISTOR	ERJ3GEYJ 153 V (15 kΩ)
R25	7030003640	S.RESISTOR	ERJ3GEYJ 473 V (47 kΩ)
R26	7030003560	S.RESISTOR	ERJ3GEYJ 103 V (10 kΩ)
R27	7030003840	S.RESISTOR	ERJ3GEYJ 225 V (2.2 MΩ)
R28	7030003680	S.RESISTOR	ERJ3GEYJ 104 V (100 kΩ)
R29	7030003720	S.RESISTOR	ERJ3GEYJ 224 V (220 kΩ)
R30	7030003680	S.RESISTOR	ERJ3GEYJ 104 V (100 kΩ)
R31	7030003800	S.RESISTOR	ERJ3GEYJ 105 V (1 MΩ)
R32	7030003680	S.RESISTOR	ERJ3GEYJ 104 V (100 kΩ)
R33	7030003720	S.RESISTOR	ERJ3GEYJ 224 V (220 kΩ)
R34	7030003680	S.RESISTOR	ERJ3GEYJ 104 V (100 kΩ)

S.=Surface mount

ManualsPlus.com

[SW-A UNIT]

REF. NO.	ORDER NO.	DESCRIPTION	
R35	7030003800	S.RESISTOR	ERJ3GEYJ 105 V (1 MΩ)
R36	7030003580	S.RESISTOR	ERJ3GEYJ 153 V (15 kΩ)
R37	7030003640	S.RESISTOR	ERJ3GEYJ 473 V (47 kΩ)
R38	7030003580	S.RESISTOR	ERJ3GEYJ 153 V (15 kΩ)
R39	7030003640	S.RESISTOR	ERJ3GEYJ 473 V (47 kΩ)
R40	7030003440	S.RESISTOR	ERJ3GEYJ 102 V (1 kΩ)
R41	7030003440	S.RESISTOR	ERJ3GEYJ 102 V (1 kΩ)
R42	7030003440	S.RESISTOR	ERJ3GEYJ 102 V (1 kΩ)
R43	7030003440	S.RESISTOR	ERJ3GEYJ 102 V (1 kΩ)
R44	7030003440	S.RESISTOR	ERJ3GEYJ 102 V (1 kΩ)
R45	7030003440	S.RESISTOR	ERJ3GEYJ 102 V (1 kΩ)
R46	7030003440	S.RESISTOR	ERJ3GEYJ 102 V (1 kΩ)
R47	7030003440	S.RESISTOR	ERJ3GEYJ 102 V (1 kΩ)
R48	7030003800	S.RESISTOR	ERJ3GEYJ 105 V (1 MΩ)
R49	7030003560	S.RESISTOR	ERJ3GEYJ 103 V (10 kΩ)
R53	7030003610	S.RESISTOR	ERJ3GEYJ 273 V (27 kΩ)
R54	7030003650	S.RESISTOR	ERJ3GEYJ 563 V (56 kΩ)
R55	7030003470	S.RESISTOR	ERJ3GEYJ 182 V (1.8 kΩ)
R56	7030003450	S.RESISTOR	ERJ3GEYJ 122 V (1.2 kΩ)
R57	7030003490	S.RESISTOR	ERJ3GEYJ 272 V (2.7 kΩ)
R58	7030003490	S.RESISTOR	ERJ3GEYJ 272 V (2.7 kΩ)
R59	7030003490	S.RESISTOR	ERJ3GEYJ 272 V (2.7 kΩ)
R60	7030003520	S.RESISTOR	ERJ3GEYJ 472 V (4.7 kΩ)
R61	7030003520	S.RESISTOR	ERJ3GEYJ 472 V (4.7 kΩ)
R62	7030003520	S.RESISTOR	ERJ3GEYJ 472 V (4.7 kΩ)
R63	7030003520	S.RESISTOR	ERJ3GEYJ 472 V (4.7 kΩ)
R64	7030003520	S.RESISTOR	ERJ3GEYJ 472 V (4.7 kΩ)
R65	7030003520	S.RESISTOR	ERJ3GEYJ 472 V (4.7 kΩ)
R66	7030003490	S.RESISTOR	ERJ3GEYJ 272 V (2.7 kΩ)
R67	7030003490	S.RESISTOR	ERJ3GEYJ 272 V (2.7 kΩ)
R68	7030003490	S.RESISTOR	ERJ3GEYJ 272 V (2.7 kΩ)
R69	7030003490	S.RESISTOR	ERJ3GEYJ 272 V (2.7 kΩ)
R70	7030003490	S.RESISTOR	ERJ3GEYJ 272 V (2.7 kΩ)
R71	7030003490	S.RESISTOR	ERJ3GEYJ 272 V (2.7 kΩ)
R72	7030003640	S.RESISTOR	ERJ3GEYJ 473 V (47 kΩ)
R73	7030003640	S.RESISTOR	ERJ3GEYJ 473 V (47 kΩ)
R74	7030003640	S.RESISTOR	ERJ3GEYJ 473 V (47 kΩ)
R75	7030003640	S.RESISTOR	ERJ3GEYJ 473 V (47 kΩ)
R76	7030003640	S.RESISTOR	ERJ3GEYJ 473 V (47 kΩ)
R77	7030003640	S.RESISTOR	ERJ3GEYJ 473 V (47 kΩ)
R78	7030003640	S.RESISTOR	ERJ3GEYJ 473 V (47 kΩ)
R79	7030003640	S.RESISTOR	ERJ3GEYJ 473 V (47 kΩ)
R80	7030003440	S.RESISTOR	ERJ3GEYJ 102 V (1 kΩ)
R81	7030003440	S.RESISTOR	ERJ3GEYJ 102 V (1 kΩ)
R82	7030003440	S.RESISTOR	ERJ3GEYJ 102 V (1 kΩ)
R83	7030003440	S.RESISTOR	ERJ3GEYJ 102 V (1 kΩ)
R84	7030003440	S.RESISTOR	ERJ3GEYJ 102 V (1 kΩ)
R85	7030003440	S.RESISTOR	ERJ3GEYJ 102 V (1 kΩ)
R86	7030003440	S.RESISTOR	ERJ3GEYJ 102 V (1 kΩ)
R87	7030003440	S.RESISTOR	ERJ3GEYJ 102 V (1 kΩ)
R88	7030003440	S.RESISTOR	ERJ3GEYJ 102 V (1 kΩ)
R89	7030003440	S.RESISTOR	ERJ3GEYJ 102 V (1 kΩ)
R90	7030003440	S.RESISTOR	ERJ3GEYJ 102 V (1 kΩ)
R91	7030003440	S.RESISTOR	ERJ3GEYJ 102 V (1 kΩ)
R92	7030003440	S.RESISTOR	ERJ3GEYJ 102 V (1 kΩ)
R93	7030003640	S.RESISTOR	ERJ3GEYJ 473 V (47 kΩ)
R94	7030003640	S.RESISTOR	ERJ3GEYJ 473 V (47 kΩ)
R95	7030003440	S.RESISTOR	ERJ3GEYJ 102 V (1 kΩ)
R96	7030003440	S.RESISTOR	ERJ3GEYJ 102 V (1 kΩ)
R97	7030003440	S.RESISTOR	ERJ3GEYJ 102 V (1 kΩ)
R98	7030003440	S.RESISTOR	ERJ3GEYJ 102 V (1 kΩ)
R99	7030003440	S.RESISTOR	ERJ3GEYJ 102 V (1 kΩ)
R100	7030003440	S.RESISTOR	ERJ3GEYJ 102 V (1 kΩ)
R101	7030003440	S.RESISTOR	ERJ3GEYJ 102 V (1 kΩ)
R102	7030003440	S.RESISTOR	ERJ3GEYJ 102 V (1 kΩ)
R103	7030003440	S.RESISTOR	ERJ3GEYJ 102 V (1 kΩ)
R104	7030003420	S.RESISTOR	ERJ3GEYJ 681 V (680 Ω)
R105	7030003470	S.RESISTOR	ERJ3GEYJ 182 V (1.8 kΩ)
R106	7030003440	S.RESISTOR	ERJ3GEYJ 102 V (1 kΩ)
R107	7030003440	S.RESISTOR	ERJ3GEYJ 102 V (1 kΩ)
R108	7030003440	S.RESISTOR	ERJ3GEYJ 102 V (1 kΩ)
R109	7030003440	S.RESISTOR	ERJ3GEYJ 102 V (1 kΩ)
R110	7030003440	S.RESISTOR	ERJ3GEYJ 102 V (1 kΩ)
R111	7030003440	S.RESISTOR	ERJ3GEYJ 102 V (1 kΩ)
R112	7030003470	S.RESISTOR	ERJ3GEYJ 182 V (1.8 kΩ)
R113	7030003420	S.RESISTOR	ERJ3GEYJ 681 V (680 Ω)

[SW-A UNIT]

REF. NO.	ORDER NO.	DESCRIPTION	
C3	4030006900	S.CERAMIC	C1608 JB 1E 103K-T-A
C4	4030006900	S.CERAMIC	C1608 JB 1E 103K-T-A
C5	4030006900	S.CERAMIC	C1608 JB 1E 103K-T-A
C6	4030009110	S.CERAMIC	C3216 JB 1C 474K-T-A
C7	4030006860	S.CERAMIC	C1608 JB 1H 102K-T-A
C8	4030006860	S.CERAMIC	C1608 JB 1H 102K-T-A
C9	4030006860	S.CERAMIC	C1608 JB 1H 102K-T-A
C10	4030006860	S.CERAMIC	C1608 JB 1H 102K-T-A
C11	4030006860	S.CERAMIC	C1608 JB 1H 102K-T-A
C12	4030009110	S.CERAMIC	C3216 JB 1C 474K-T-A
C13	4030006900	S.CERAMIC	C1608 JB 1E 103K-T-A
C14	4030006900	S.CERAMIC	C1608 JB 1E 103K-T-A
C15	4030006900	S.CERAMIC	C1608 JB 1E 103K-T-A
C16	4030006900	S.CERAMIC	C1608 JB 1E 103K-T-A
C17	4030006900	S.CERAMIC	C1608 JB 1E 103K-T-A
C18	4030010070	S.CERAMIC	C1608 X7S 1C 104K-T-A
C19	4030010070	S.CERAMIC	C1608 X7S 1C 104K-T-A
C20	4030010070	S.CERAMIC	C1608 X7S 1C 104K-T-A
C21	4030010070	S.CERAMIC	C1608 X7S 1C 104K-T-A
C22	4030010070	S.CERAMIC	C1608 X7S 1C 104K-T-A
C23	4030010070	S.CERAMIC	C1608 X7S 1C 104K-T-A
C24	4030006880	S.CERAMIC	C1608 JB 1H 472K-T-A
C25	4030006880	S.CERAMIC	C1608 JB 1H 472K-T-A
C26	4030006880	S.CERAMIC	C1608 JB 1H 472K-T-A
C27	4030006880	S.CERAMIC	C1608 JB 1H 472K-T-A
C28	4030006880	S.CERAMIC	C1608 JB 1H 472K-T-A
C29	4030006880	S.CERAMIC	C1608 JB 1H 472K-T-A
C30	4030006880	S.CERAMIC	C1608 JB 1H 472K-T-A
C31	4030006880	S.CERAMIC	C1608 JB 1H 472K-T-A
C32	4030006880	S.CERAMIC	C1608 JB 1H 472K-T-A
C33	4030006880	S.CERAMIC	C1608 JB 1H 472K-T-A
C34	4030006880	S.CERAMIC	C1608 JB 1H 472K-T-A
C35	4030006880	S.CERAMIC	C1608 JB 1H 472K-T-A
C36	4030006880	S.CERAMIC	C1608 JB 1H 472K-T-A
C37	4030006880	S.CERAMIC	C1608 JB 1H 472K-T-A
C38	4030010070	S.CERAMIC	C1608 X7S 1C 104K-T-A
C40	4030010070	S.CERAMIC	C1608 X7S 1C 104K-T-A
C41	4030010070	S.CERAMIC	C1608 X7S 1C 104K-T-A
C42	4030010070	S.CERAMIC	C1608 X7S 1C 104K-T-A
C43	4510004650	S.ELECTROLITIC	ECEV1EA4R7SR
C44	4030006880	S.CERAMIC	C1608 JB 1H 472K-T-A
C45	4030006880	S.CERAMIC	C1608 JB 1H 472K-T-A
C46	4030006880	S.CERAMIC	C1608 JB 1H 472K-T-A
C47	4030006880	S.CERAMIC	C1608 JB 1H 472K-T-A
C48	4030006880	S.CERAMIC	C1608 JB 1H 472K-T-A
C49	4030006880	S.CERAMIC	C1608 JB 1H 472K-T-A
C50	4030006880	S.CERAMIC	C1608 JB 1H 472K-T-A
C51	4030006880	S.CERAMIC	C1608 JB 1H 472K-T-A
C52	4030006880	S.CERAMIC	C1608 JB 1H 472K-T-A
C53	4030006880	S.CERAMIC	C1608 JB 1H 472K-T-A
C54	4030006880	S.CERAMIC	C1608 JB 1H 472K-T-A
C55	4030006880	S.CERAMIC	C1608 JB 1H 472K-T-A
DS1	5040001870	S.LED	SEC 2462C
DS2	5040001870	S.LED	SEC 2462C
S1	2260001890	S.SWITCH	SKQDPA
S2	2260001890	S.SWITCH	SKQDPA
S3	2260001890	S.SWITCH	SKQDPA
S4	2260001890	S.SWITCH	SKQDPA
S5	2260001890	S.SWITCH	SKQDPA
S6	2260001890	S.SWITCH	SKQDPA
S7	2260001890	S.SWITCH	SKQDPA
S8	2260001890	S.SWITCH	SKQDPA
S9	2260001890	S.SWITCH	SKQDPA
S10	2260001890	S.SWITCH	SKQDPA
S11	2260001890	S.SWITCH	SKQDPA
S12	2260001890	S.SWITCH	SKQDPA
S13	2260001890	S.SWITCH	SKQDPA
S14	2260001890	S.SWITCH	SKQDPA
S15	2260001890	S.SWITCH	SKQDPA
S16	2260001890	S.SWITCH	SKQDPA
S17	2260001890	S.SWITCH	SKQDPA
S18	2260001890	S.SWITCH	SKQDPA

S.=Surface mount

ManualsPlus.com

[SW-A UNIT]

REF. NO.	ORDER NO.	DESCRIPTION	
S19	2260001890	S.SWITCH	SKQDPA
S20	2260001890	S.SWITCH	SKQDPA
S21	2260001890	S.SWITCH	SKQDPA
S22	2260001890	S.SWITCH	SKQDPA
S23	2260001890	S.SWITCH	SKQDPA
S24	2260001890	S.SWITCH	SKQDPA
S25	2260001890	S.SWITCH	SKQDPA
S26	2260001890	S.SWITCH	SKQDPA
S27	2260001890	S.SWITCH	SKQDPA
S28	2260001890	S.SWITCH	SKQDPA
S29	2260001890	S.SWITCH	SKQDPA
S30	2260001890	S.SWITCH	SKQDPA
S31	2260001890	S.SWITCH	SKQDPA
S32	2260001890	S.SWITCH	SKQDPA
S33	2260001890	S.SWITCH	SKQDPA
S34	2260001890	S.SWITCH	SKQDPA
S35	2260001890	S.SWITCH	SKQDPA
S36	2260001890	S.SWITCH	SKQDPA
S37	2260001890	S.SWITCH	SKQDPA
S38	2260001890	S.SWITCH	SKQDPA
S39	2260001890	S.SWITCH	SKQDPA
S40	2260001890	S.SWITCH	SKQDPA
S41	2260001890	S.SWITCH	SKQDPA
S42	2260001890	S.SWITCH	SKQDPA
S43	2260001890	S.SWITCH	SKQDPA
S44	2260001890	S.SWITCH	SKQDPA
S45	2260001890	S.SWITCH	SKQDPA
J1	6510003400	CONNECTOR	B04B-EH-S
J2	6510003390	CONNECTOR	B03B-EH-S
J3	6510017720	S.CONNECTOR	IL-FPR-30S-VF-E1500
J5	6510017650	CONNECTOR	52045-1045
J6	6510017670	CONNECTOR	52045-2045
J7	6510017790	CONNECTOR	52045-0645
J8	6510017790	CONNECTOR	52045-0645
J9	6510017790	CONNECTOR	52045-0645
J10	6510017660	CONNECTOR	52045-1645
EP1	0910043643	PCB	B 4297C

[SW-B UNIT]

REF. NO.	ORDER NO.	DESCRIPTION	
D1	1750000290	S.DIODE	1SS300 (TE85R)
D2	1750000290	S.DIODE	1SS300 (TE85R)
D4	1750000290	S.DIODE	1SS300 (TE85R)
D6	1750000290	S.DIODE	1SS300 (TE85R)
D7	1750000290	S.DIODE	1SS300 (TE85R)
D9	1750000290	S.DIODE	1SS300 (TE85R)
DS1	5040001970	S.LED	BR1102W-TR
DS2	5040001970	S.LED	BR1102W-TR
DS3	5040001970	S.LED	BR1102W-TR
DS4	5040001970	S.LED	BR1102W-TR
DS5	5040001970	S.LED	BR1102W-TR
DS6	5040001970	S.LED	BR1102W-TR
S1	2260001890	S.SWITCH	SKQDPA
S2	2260001890	S.SWITCH	SKQDPA
S3	2260001890	S.SWITCH	SKQDPA
S4	2260001890	S.SWITCH	SKQDPA
S5	2260001890	S.SWITCH	SKQDPA
S6	2260001890	S.SWITCH	SKQDPA
S7	2260001890	S.SWITCH	SKQDPA
S8	2260001890	S.SWITCH	SKQDPA

[SW-B UNIT]

REF. NO.	ORDER NO.	DESCRIPTION	
S9	2260001890	S.SWITCH	SKQDPA
J1	6510017660	CONNECTOR	52045-1645
EP1	0910043662	PCB	B 4299B

[VR-A UNIT]

REF. NO.	ORDER NO.	DESCRIPTION	
R1	7030003470	S.RESISTOR	ERJ3GEYJ 182 V (1.8 kΩ)
R2	7030003380	S.RESISTOR	ERJ3GEYJ 331 V (330 Ω)
R3	7030003400	S.RESISTOR	ERJ3GEYJ 471 V (470 Ω)
R4	7030003430	S.RESISTOR	ERJ3GEYJ 821 V (820 Ω)
R5	7030003460	S.RESISTOR	ERJ3GEYJ 152 V (1.5 kΩ)
R6	7030003510	S.RESISTOR	ERJ3GEYJ 392 V (3.9 kΩ)
R7	7030003470	S.RESISTOR	ERJ3GEYJ 182 V (1.8 kΩ)
R8	7030003380	S.RESISTOR	ERJ3GEYJ 331 V (330 Ω)
R9	7030003400	S.RESISTOR	ERJ3GEYJ 471 V (470 Ω)
R10	7030003430	S.RESISTOR	ERJ3GEYJ 821 V (820 Ω)
R11	7030003460	S.RESISTOR	ERJ3GEYJ 152 V (1.5 kΩ)
R12	7030003510	S.RESISTOR	ERJ3GEYJ 392 V (3.9 kΩ)
R13	7030003470	S.RESISTOR	ERJ3GEYJ 182 V (1.8 kΩ)
R14	7030003380	S.RESISTOR	ERJ3GEYJ 331 V (330 Ω)
R15	7030003400	S.RESISTOR	ERJ3GEYJ 471 V (470 Ω)
R16	7030003540	S.RESISTOR	ERJ3GEYJ 682 V (6.8 kΩ)
R17	7210002590	VARIABLE	RV-290 (RK09L1140) 10KB
R18	7210002580	VARIABLE	RV-289 (RK09L1140) 1MB
R19	7210002610	VARIABLE	RV-292 (RK09L1140) 1KB
R20	7210002590	VARIABLE	RV-290 (RK09L1140) 10KB
R21	7210002600	VARIABLE	RV-291 (RK09L1140) 2MA
R22	7210002590	VARIABLE	RV-290 (RK09L1140) 10KB
R23	7030003470	S.RESISTOR	ERJ3GEYJ 182 V (1.8 kΩ)
R24	7030003380	S.RESISTOR	ERJ3GEYJ 331 V (330 Ω)
R25	7030003400	S.RESISTOR	ERJ3GEYJ 471 V (470 Ω)
R26	7030003430	S.RESISTOR	ERJ3GEYJ 821 V (820 Ω)
R27	7030003460	S.RESISTOR	ERJ3GEYJ 152 V (1.5 kΩ)
R28	7030003510	S.RESISTOR	ERJ3GEYJ 392 V (3.9 kΩ)
R31	7210002810	VARIABLE	RV-303 (RK162B) 10KB/10KB
R32	7030003560	S.RESISTOR	ERJ3GEYJ 103 V (10 kΩ)
R34	7210002800	VARIABLE	RV-302 (RK162B) 100KB/10KB
R37	7210002810	VARIABLE	RV-303 (RK162B) 10KB/10KB
R40	7210002810	VARIABLE	RV-303 (RK162B) 10KB/10KB
R41	7210002620	VARIABLE	EVU-FLAE02 B15
R42	7030003680	S.RESISTOR	ERJ3GEYJ 104 V (100 kΩ)
R43	7210002620	VARIABLE	EVU-FLAE02 B15
R44	7210002630	VARIABLE	EVU-FLAE02 B14 (10KB)
R45	7210002630	VARIABLE	EVU-FLAE02 B14 (10KB)
R46	7030003480	S.RESISTOR	ERJ3GEYJ 222 V (2.2 kΩ)
R47	7030003500	S.RESISTOR	ERJ3GEYJ 332 V (3.3 kΩ)
R48	7030003530	S.RESISTOR	ERJ3GEYJ 562 V (5.6 kΩ)
R49	7030003480	S.RESISTOR	ERJ3GEYJ 222 V (2.2 kΩ)
R50	7030003600	S.RESISTOR	ERJ3GEYJ 223 V (22 kΩ)
C1	4310000400	MYLAR	50 F2D 223J
C2	4310000400	MYLAR	50 F2D 223J
C3	4310000610	MYLAR	50 F2D 472J
C4	4310000610	MYLAR	50 F2D 472J
C5	4030006880	S.CERAMIC	C1608 JB 1H 472K-T-A
C6	4030006880	S.CERAMIC	C1608 JB 1H 472K-T-A
C7	4030006880	S.CERAMIC	C1608 JB 1H 472K-T-A
DS1	5040001980	LED	SLP835A-37
DS2	5040001980	LED	SLP835A-37
DS3	5040001980	LED	SLP835A-37
DS4	5040001980	LED	SLP835A-37

S.=Surface mount

ManualsPlus.com

[VR-A UNIT]

REF. NO.	ORDER NO.	DESCRIPTION	
DS5	5040001980	LED	SLP835A-37
DS6	5040001980	LED	SLP835A-37
DS7	5040001980	LED	SLP835A-37
DS8	5040001980	LED	SLP835A-37
DS9	5040001980	LED	SLP835A-37
S1	2230000810	SWITCH	ESB-64801
S2	2210000640	SWITCH	SW-155 (SRBV16-F25-2)
S3	2210000640	SWITCH	SW-155 (SRBV16-F25-2)
S4	2260001890	S.SWITCH	SKQDPA
S5	2260001890	S.SWITCH	SKQDPA
S6	2260001890	S.SWITCH	SKQDPA
S7	2260001890	S.SWITCH	SKQDPA
S8	2260001890	S.SWITCH	SKQDPA
S9	2260001890	S.SWITCH	SKQDPA
S10	2260001890	S.SWITCH	SKQDPA
S11	2260001890	S.SWITCH	SKQDPA
S12	2260001890	S.SWITCH	SKQDPA
S13	2230000810	SWITCH	ESB-64801
S14	2230000810	SWITCH	ESB-64801
S15	2230000830	SWITCH	ESB-64803
J1	6510017650	CONNECTOR	52045-1045
J2	6510017790	CONNECTOR	52045-0645
J3	6510017790	CONNECTOR	52045-0645
J4	6510017720	S.CONNECTOR	IL-FPR-30S-VF-E1500
EP1	0910043793	PCB	B 4293C

[VR-B UNIT]

REF. NO.	ORDER NO.	DESCRIPTION	
R1	7210002550	VARIABLE	RV-295 (RK0972210) 10KB/10KB
J1	6510017790	CONNECTOR	52045-0645
EP1	0910043491	PCB	B 4294A

[VR-C UNIT]

REF. NO.	ORDER NO.	DESCRIPTION	
R1	7210002820	VARIABLE	RV-304 (RK1612210) 10KC/10KB
J1	6510017790	CONNECTOR	52045-0645
EP1	0910043500	PCB	B 4295

[JACK UNIT]

REF. NO.	ORDER NO.	DESCRIPTION	
L1	6200003950	S.COIL	HF50ACC 322513-T
L2	6200003950	S.COIL	HF50ACC 322513-T
R1	7030006070	S.RESISTOR	ERJ12YJ101H (100 Ω)
R2	7030006070	S.RESISTOR	ERJ12YJ101H (100 Ω)
C1	4030006880	S.CERAMIC	C1608 JB 1H 472K-T-A
C2	4030006880	S.CERAMIC	C1608 JB 1H 472K-T-A
C3	4030006880	S.CERAMIC	C1608 JB 1H 472K-T-A
C4	4030006880	S.CERAMIC	C1608 JB 1H 472K-T-A
C5	4030006880	S.CERAMIC	C1608 JB 1H 472K-T-A
J1	6450001530	CONNECTOR	HLJ5815-01-4030
J2	6450001540	CONNECTOR	HLJ5315-01-4020
J3	6510017650	CONNECTOR	52045-1045
EP1	0910043652	PCB	B 4298B

[MIC UNIT]

REF. NO.	ORDER NO.	DESCRIPTION	
L1	6200003260	S.COIL	NL 322522T-101J
L2	6200003260	S.COIL	NL 322522T-101J
L3	6200003260	S.COIL	NL 322522T-101J
L4	6200003260	S.COIL	NL 322522T-101J
L5	6200003950	S.COIL	HF50ACC 322513-T
L6	6200003950	S.COIL	HF50ACC 322513-T
L7	6200003950	S.COIL	HF50ACC 322513-T
C1	4030006880	S.CERAMIC	C1608 JB 1H 472K-T-A
C2	4030006880	S.CERAMIC	C1608 JB 1H 472K-T-A
C3	4030006880	S.CERAMIC	C1608 JB 1H 472K-T-A
C4	4030006880	S.CERAMIC	C1608 JB 1H 472K-T-A
C5	4030006880	S.CERAMIC	C1608 JB 1H 472K-T-A
C7	4030006880	S.CERAMIC	C1608 JB 1H 472K-T-A
C8	4030007130	S.CERAMIC	C1608 CH 1H 101J-T-A
J1	6510017650	CONNECTOR	52045-1045
J2	6510000190	CONNECTOR	FM214-8SS(P)
EP1	0910043671	PCB	B 4329A

[RIT UNIT]

REF. NO.	ORDER NO.	DESCRIPTION	
S1	2250000230	ENCODER	SW-156 (EC16B40B)
J1	6510017790	CONNECTOR	52045-0645
EP1	0910043510	PCB	B 4296

S.=Surface mount

ManualsPlus.com

[DSP UNIT] (IC-775 DSP only)

REF. NO.	ORDER NO.	DESCRIPTION	
IC1	1110002020	IC	TA7805S
IC2	1110000960	S.IC	NJM4558M(T1)
IC3	1130005970	S.IC	TC74HC4053AF
IC4	1110000960	S.IC	NJM4558M(T1)
IC5	1110000960	S.IC	NJM4558M(T1)
IC6	1110003590	S.IC	MF10CCWMX
IC7	1110003630	IC	MAX297CPA
IC8	1190000310	IC	ADC16471CIN
IC9	1110003620	S.IC	PCM69AU
IC10	1110000960	S.IC	NJM4558M(T1)
IC11	2040000330	IC	SC-1179
IC12	1110001550	S.IC	S-8054ALB-LM-T1
IC13	1140004840	S.IC	SC-1308
IC14	1140005500	S.IC	SC-1335
IC15	1140005500	S.IC	SC-1335
IC201	1130003830	S.IC	TC7S04F (TE85R)
D1	1750000270	S.DIODE	1SS301 (TE85R)
D2	1750000270	S.DIODE	1SS301 (TE85R)
D3	1750000270	S.DIODE	1SS301 (TE85R)
D201	1750000270	S.DIODE	1SS301 (TE85R)
X1	6050009350	S.XTAL	CR-504 UM-5J (40MHz)
L1	6180000900	COIL	LAL 03NA 101K
L2	6910000670	COIL	BL01RN1-A62-001
L3	6910000670	COIL	BL01RN1-A62-001
L4	6180000990	COIL	LAL 04NA 101K
R1	7030003440	S.RESISTOR	ERJ3GEYJ 102 V (1 kΩ)
R2	7030003440	S.RESISTOR	ERJ3GEYJ 102 V (1 kΩ)
R3	7030003440	S.RESISTOR	ERJ3GEYJ 102 V (1 kΩ)
R4	7030003440	S.RESISTOR	ERJ3GEYJ 102 V (1 kΩ)
R5	7030003440	S.RESISTOR	ERJ3GEYJ 102 V (1 kΩ)
R6	7030003440	S.RESISTOR	ERJ3GEYJ 102 V (1 kΩ)
R7	7030003440	S.RESISTOR	ERJ3GEYJ 102 V (1 kΩ)
R8	7030003440	S.RESISTOR	ERJ3GEYJ 102 V (1 kΩ)
R9	7030003440	S.RESISTOR	ERJ3GEYJ 102 V (1 kΩ)
R10	7030003660	S.RESISTOR	ERJ3GEYJ 683 V (68 kΩ)
R12	7030003640	S.RESISTOR	ERJ3GEYJ 473 V (47 kΩ)
R13	7030003640	S.RESISTOR	ERJ3GEYJ 473 V (47 kΩ)
R14	7030003640	S.RESISTOR	ERJ3GEYJ 473 V (47 kΩ)
R15	7030003640	S.RESISTOR	ERJ3GEYJ 473 V (47 kΩ)
R16	7030003640	S.RESISTOR	ERJ3GEYJ 473 V (47 kΩ)
R17	7030003680	S.RESISTOR	ERJ3GEYJ 104 V (100 kΩ)
R18	7070000680	RESISTOR	CRH300 R-02J 3.9 Ω (3R9)
R20	7030003570	S.RESISTOR	ERJ3GEYJ 123 V (12 kΩ)
R21	7030003690	S.RESISTOR	ERJ3GEYJ 124 V (120 kΩ)
R22	7030003560	S.RESISTOR	ERJ3GEYJ 103 V (10 kΩ)
R23	7030003760	S.RESISTOR	ERJ3GEYJ 474 V (470 kΩ)
R24	7030003560	S.RESISTOR	ERJ3GEYJ 103 V (10 kΩ)
R25	7030003560	S.RESISTOR	ERJ3GEYJ 103 V (10 kΩ)
R26	7030003560	S.RESISTOR	ERJ3GEYJ 103 V (10 kΩ)
R27	7030003570	S.RESISTOR	ERJ3GEYJ 123 V (12 kΩ)
R28	7030003560	S.RESISTOR	ERJ3GEYJ 103 V (10 kΩ)
R29	7030003640	S.RESISTOR	ERJ3GEYJ 473 V (47 kΩ)
R30	7030003510	S.RESISTOR	ERJ3GEYJ 392 V (3.9 kΩ)
R31	7030003540	S.RESISTOR	ERJ3GEYJ 682 V (6.8 kΩ)
R32	7030003620	S.RESISTOR	ERJ3GEYJ 333 V (33 kΩ)
R33	7030003620	S.RESISTOR	ERJ3GEYJ 333 V (33 kΩ)
R34	7030003620	S.RESISTOR	ERJ3GEYJ 333 V (33 kΩ)
R35	7030003610	S.RESISTOR	ERJ3GEYJ 273 V (27 kΩ)
R36	7030003610	S.RESISTOR	ERJ3GEYJ 273 V (27 kΩ)
R37	7030003600	S.RESISTOR	ERJ3GEYJ 223 V (22 kΩ)
R38	7030003600	S.RESISTOR	ERJ3GEYJ 223 V (22 kΩ)
R39	7030003580	S.RESISTOR	ERJ3GEYJ 153 V (15 kΩ)
R40	7030003600	S.RESISTOR	ERJ3GEYJ 223 V (22 kΩ)
R41	7030003600	S.RESISTOR	ERJ3GEYJ 223 V (22 kΩ)
R42	7030003600	S.RESISTOR	ERJ3GEYJ 223 V (22 kΩ)
R43	7030003580	S.RESISTOR	ERJ3GEYJ 153 V (15 kΩ)
R44	7030003600	S.RESISTOR	ERJ3GEYJ 223 V (22 kΩ)
R45	7030003620	S.RESISTOR	ERJ3GEYJ 333 V (33 kΩ)

[DSP UNIT] (IC-775DSP only)

REF. NO.	ORDER NO.	DESCRIPTION	
R46	7030003620	S.RESISTOR	ERJ3GEYJ 333 V (33 kΩ)
R47	7030003620	S.RESISTOR	ERJ3GEYJ 333 V (33 kΩ)
R48	7030003520	S.RESISTOR	ERJ3GEYJ 472 V (4.7 kΩ)
R49	7030003520	S.RESISTOR	ERJ3GEYJ 472 V (4.7 kΩ)
R50	7030003320	S.RESISTOR	ERJ3GEYJ 101 V (100 Ω)
R52	7030003280	S.RESISTOR	ERJ3GEYJ 470 V (47 Ω)
R54	7030003340	S.RESISTOR	ERJ3GEYJ 151 V (150 Ω)
R55	7030003430	S.RESISTOR	ERJ3GEYJ 821 V (820 Ω)
R56	7030003510	S.RESISTOR	ERJ3GEYJ 392 V (3.9 kΩ)
R58	7030003530	S.RESISTOR	ERJ3GEYJ 562 V (5.6 kΩ)
R59	7030003580	S.RESISTOR	ERJ3GEYJ 153 V (15 kΩ)
R60	7030003410	S.RESISTOR	ERJ3GEYJ 561 V (560 Ω)
R61	7030003640	S.RESISTOR	ERJ3GEYJ 473 V (47 kΩ)
R62	7030003800	S.RESISTOR	ERJ3GEYJ 105 V (1 MΩ)
R64	7030003520	S.RESISTOR	ERJ3GEYJ 472 V (4.7 kΩ)
R65	7030003520	S.RESISTOR	ERJ3GEYJ 472 V (4.7 kΩ)
R101	7030003680	S.RESISTOR	ERJ3GEYJ 104 V (100 kΩ)
R102	7030003560	S.RESISTOR	ERJ3GEYJ 103 V (10 kΩ)
R103	7030003560	S.RESISTOR	ERJ3GEYJ 103 V (10 kΩ)
R201	7030003640	S.RESISTOR	ERJ3GEYJ 473 V (47 kΩ)
C1	4030010070	S.CERAMIC	C1608 X7S 1C 104K-T-A
C2	4510004630	S.ELECTROLITIC	ECEV1CA100SR
C3	4030010070	S.CERAMIC	C1608 X7S 1C 104K-T-A
C4	4510004630	S.ELECTROLITIC	ECEV1CA100SR
C5	4510004630	S.ELECTROLITIC	ECEV1CA100SR
C6	4030010070	S.CERAMIC	C1608 X7S 1C 104K-T-A
C7	4030010070	S.CERAMIC	C1608 X7S 1C 104K-T-A
C8	4510004630	S.ELECTROLITIC	ECEV1CA100SR
C9	4030010070	S.CERAMIC	C1608 X7S 1C 104K-T-A
C10	4510004630	S.ELECTROLITIC	ECEV1CA100SR
C11	4030010070	S.CERAMIC	C1608 X7S 1C 104K-T-A
C12	4510004630	S.ELECTROLITIC	ECEV1CA100SR
C13	4510005830	S.ELECTROLITIC	ECEV1HAN010R
C14	4510005830	S.ELECTROLITIC	ECEV1HAN010R
C15	4510004440	S.ELECTROLITIC	ECEV1HA010SR
C16	4030010070	S.CERAMIC	C1608 X7S 1C 104K-T-A
C17	4030010070	S.CERAMIC	C1608 X7S 1C 104K-T-A
C18	4030010070	S.CERAMIC	C1608 X7S 1C 104K-T-A
C19	4510004630	S.ELECTROLITIC	ECEV1CA100SR
C20	4030010070	S.CERAMIC	C1608 X7S 1C 104K-T-A
C21	4510004630	S.ELECTROLITIC	ECEV1CA100SR
C22	4030006880	S.CERAMIC	C1608 JB 1H 472K-T-A
C23	4030006900	S.CERAMIC	C1608 JB 1E 103K-T-A
C24	4030006840	S.CERAMIC	C1608 SL 1H 391J-T-A
C25	4030010070	S.CERAMIC	C1608 X7S 1C 104K-T-A
C26	4510004630	S.ELECTROLITIC	ECEV1CA100SR
C27	4030010070	S.CERAMIC	C1608 X7S 1C 104K-T-A
C28	4510004630	S.ELECTROLITIC	ECEV1CA100SR
C29	4030008860	S.CERAMIC	C1608 JB 1C 153K-T-A
C30	4030007160	S.CERAMIC	C1608 CH 1H 181J-T-A
C31	4030010070	S.CERAMIC	C1608 X7S 1C 104K-T-A
C32	4510004630	S.ELECTROLITIC	ECEV1CA100SR
C33	4030010070	S.CERAMIC	C1608 X7S 1C 104K-T-A
C34	4510004630	S.ELECTROLITIC	ECEV1CA100SR
C35	4030006870	S.CERAMIC	C1608 JB 1H 222K-T-A
C36	4030010110	S.CERAMIC	C1608 SL 1H 471J-T-A
C37	4510004630	S.ELECTROLITIC	ECEV1CA100SR
C38	4510004630	S.ELECTROLITIC	ECEV1CA100SR
C39	4030010070	S.CERAMIC	C1608 X7S 1C 104K-T-A
C40	4550006250	S.TANTALUM	TEMSVA 1A 106M-8L
C41	4030010070	S.CERAMIC	C1608 X7S 1C 104K-T-A
C42	4550006250	S.TANTALUM	TEMSVA 1A 106M-8L
C43	4030010070	S.CERAMIC	C1608 X7S 1C 104K-T-A
C44	4550006250	S.TANTALUM	TEMSVA 1A 106M-8L
C45	4030008650	S.CERAMIC	C1608 JB 1H 332K-T-A
C46	4030008650	S.CERAMIC	C1608 JB 1H 332K-T-A
C47	4510004630	S.ELECTROLITIC	ECEV1CA100SR
C48	4510004630	S.ELECTROLITIC	ECEV1CA100SR
C49	4510004630	S.ELECTROLITIC	ECEV1CA100SR
C50	4030010070	S.CERAMIC	C1608 X7S 1C 104K-T-A
C51	4510004630	S.ELECTROLITIC	ECEV1CA100SR
C52	4510004630	S.ELECTROLITIC	ECEV1CA100SR
C53	4030010070	S.CERAMIC	C1608 X7S 1C 104K-T-A
C54	4510004630	S.ELECTROLITIC	ECEV1CA100SR

S.=Surface mount

ManualsPlus.com

[DSP UNIT] (IC-775DSP only)

REF. NO.	ORDER NO.	DESCRIPTION	
C55	4030010070	S.CERAMIC	C1608 X7S 1C 104K-T-A
C56	4510004630	S.ELECTROLITIC	ECEV1CA100SR
C57	4510004630	S.ELECTROLITIC	ECEV1CA100SR
C58	4510004630	S.ELECTROLITIC	ECEV1CA100SR
C59	4510005890	S.ELECTROLITIC	ECEV1AAN100R
C60	4510004630	S.ELECTROLITIC	ECEV1CA100SR
C61	4030010070	S.CERAMIC	C1608 X7S 1C 104K-T-A
C62	4030010070	S.CERAMIC	C1608 X7S 1C 104K-T-A
C63	4030007030	S.CERAMIC	C1608 CH 1H 150J-T-A
C64	4030007030	S.CERAMIC	C1608 CH 1H 150J-T-A
C65	4030010070	S.CERAMIC	C1608 X7S 1C 104K-T-A
C66	4030010070	S.CERAMIC	C1608 X7S 1C 104K-T-A
C67	4030010070	S.CERAMIC	C1608 X7S 1C 104K-T-A
C70	4030010070	S.CERAMIC	C1608 X7S 1C 104K-T-A
C71	4030010070	S.CERAMIC	C1608 X7S 1C 104K-T-A
C72	4030010070	S.CERAMIC	C1608 X7S 1C 104K-T-A
C73	4030010070	S.CERAMIC	C1608 X7S 1C 104K-T-A
C74	4030010070	S.CERAMIC	C1608 X7S 1C 104K-T-A
C75	4030010070	S.CERAMIC	C1608 X7S 1C 104K-T-A
C76	4030010070	S.CERAMIC	C1608 X7S 1C 104K-T-A
C77	4030010070	S.CERAMIC	C1608 X7S 1C 104K-T-A
C78	4030010070	S.CERAMIC	C1608 X7S 1C 104K-T-A
C79	4550006250	S.TANTALUM	TEMSVA 1A 106M-8L
C80	4030010070	S.CERAMIC	C1608 X7S 1C 104K-T-A
C81	4550006250	S.TANTALUM	TEMSVA 1A 106M-8L
C82	4510004440	S.ELECTROLITIC	ECEV1HA010SR
C83	4510004440	S.ELECTROLITIC	ECEV1HA010SR
C84	4510005830	S.ELECTROLITIC	ECEV1HAN010R
C85	4510005890	S.ELECTROLITIC	ECEV1AAN100R
C201	4030010070	S.CERAMIC	C1608 X7S 1C 104K-T-A
W1	7030003860	S.JUMPER	ERJ3GE JPW V
J1	6510003560	CONNECTOR	S08B-EH-S
J2	6510003400	CONNECTOR	B04B-EH-S
J3	6510003470	CONNECTOR	B11B-EH-S
EP1	0910044584	PCB	B 4365D

[MAIN UNIT]

REF. NO.	ORDER NO.	DESCRIPTION	
IC1	1110000960	S.IC	NJM4558M(T1)
IC2	1130007680	S.IC	BU4053BCF-T1
IC4	1130007700	S.IC	BU4094BCF-T1
IC5	1130005720	S.IC	TC7W04F (TE12L)
IC6	1110000890	IC	µPC1241H
IC7	1110000960	S.IC	NJM4558M(T1)
IC8	1110003300	S.IC	M5282FP 70CD
IC9	1180001070	S.IC	TA7805F(TE16L)
IC10	1110001550	S.IC	S-8054ALB-LM-T1
IC11	1140004820	S.IC	X24C16S8-2.7
IC12	1140005210	S.IC	HD6433834A34H
IC13	1110003690	S.IC	M62354GP 75EC
IC14	1110000960	S.IC	NJM4558M(T1)
IC15	1110000960	S.IC	NJM4558M(T1)
IC16	1110003300	S.IC	M5282FP 70CD
IC17	1130005820	S.IC	TC4S584F(TE85R)
IC20	1110000960	S.IC	NJM4558M(T1)
IC21	1180001260	S.IC	BA9700AF-T1
IC22	1130004170	S.IC	TC4S01F (TE85R)
IC23	1110002680	S.IC	NJM2902M-T1
IC24	1110000960	S.IC	NJM4558M(T1)
Q2	1530002690	S.TRANSISTOR	2SC4116-GR (TE85R)
Q3	1530002690	S.TRANSISTOR	2SC4116-GR (TE85R)
Q4	1510000770	S.TRANSISTOR	2SA1586-GR (TE85R)
Q5	1540000450	S.TRANSISTOR	2SD1623-T-TD
Q6	1530003090	S.TRANSISTOR	2SC4213-B (TE85R)
Q8	1590000430	S.TRANSISTOR	DTC144EU T107
Q9	1590000430	S.TRANSISTOR	DTC144EU T107
Q10	1590000430	S.TRANSISTOR	DTC144EU T107
Q11	1590000430	S.TRANSISTOR	DTC144EU T107
Q12	1590000680	S.TRANSISTOR	DTC114EU T107
Q16	1540000460	S.TRANSISTOR	2SD1817-TL
Q17	1530003300	S.TRANSISTOR	2SC3647S-TD
Q18	1530003300	S.TRANSISTOR	2SC3647S-TD
Q19	1590000680	S.TRANSISTOR	DTC114EU T107
Q20	1540000470	S.TRANSISTOR	2SD1801S-TL
Q21	1520000550	S.TRANSISTOR	2SB1123S-TD
Q22	1590000660	S.TRANSISTOR	DTC144TU T107
Q23	1510000770	S.TRANSISTOR	2SA1586-GR (TE85R)
Q24	1590000430	S.TRANSISTOR	DTC144EU T107
Q25	1590001450	S.FET	2SJ144-GR (TE85R)
Q26	1590000430	S.TRANSISTOR	DTC144EU T107
Q27	1590000430	S.TRANSISTOR	DTC144EU T107
D1	1750000270	S.DIODE	1SS301 (TE85R)
D2	1750000020	S.DIODE	1SS184 (TE85R)
D3	1750000270	S.DIODE	1SS301 (TE85R)
D4	1750000270	S.DIODE	1SS301 (TE85R)
D5	1750000020	S.DIODE	1SS184 (TE85R)
D6	1750000020	S.DIODE	1SS184 (TE85R)
D7	1750000270	S.DIODE	1SS301 (TE85R)
D8	1750000270	S.DIODE	1SS301 (TE85R)
D9	1750000270	S.DIODE	1SS301 (TE85R)
D13	1750000270	S.DIODE	1SS301 (TE85R)
D14	1730000930	S.ZENER	RD13M-T2B1
D15	1790001130	S.DIODE	D2FS4-4063
D16	1750000270	S.DIODE	1SS301 (TE85R)
D17	1750000270	S.DIODE	1SS301 (TE85R)
D18	1750000270	S.DIODE	1SS301 (TE85R)
D19	1750000270	S.DIODE	1SS301 (TE85R)
D20	1750000270	S.DIODE	1SS301 (TE85R)
X1	6050008160	S.XTAL	CR-410 (9.8304MHz)
L1	6170000140	COIL	LW-15
L4	6180000990	COIL	LAL 04NA 101K
L5	6190001070	COIL	R622LY-221K
L6	6190001060	S.COIL	661MN-1139 (BLC20)
L7	6190000220	COIL	S0971136-101K
L8	6180000990	COIL	LAL 04NA 101K
L9	6180003040	COIL	LHL 08NB 101K

S.=Surface mount

ManualsPlus.com

[MAIN UNIT]

REF. NO.	ORDER NO.	DESCRIPTION	
L11	2040000490	COIL	EXC-ELDR25C
L12	6170000150	COIL	LW-16
L13	2040000490	COIL	EXC-ELDR25C
R1	7030003650	S.RESISTOR	ERJ3GEYJ 563 V (56 kΩ)
R2	7030003420	S.RESISTOR	ERJ3GEYJ 681 V (680 Ω)
R3	7030003710	S.RESISTOR	ERJ3GEYJ 184 V (180 kΩ)
R4	7030003640	S.RESISTOR	ERJ3GEYJ 473 V (47 kΩ)
R5	7030003580	S.RESISTOR	ERJ3GEYJ 153 V (15 kΩ)
R6	7030003580	S.RESISTOR	ERJ3GEYJ 153 V (15 kΩ)
R7	7030003320	S.RESISTOR	ERJ3GEYJ 101 V (100 Ω)
R8	7030003320	S.RESISTOR	ERJ3GEYJ 101 V (100 Ω)
R9	7030003440	S.RESISTOR	ERJ3GEYJ 102 V (1 kΩ)
R10	7010003100	RESISTOR	ELR20J 3.3 Ω
R11	7010003040	RESISTOR	ELR20J 1 Ω
R12	7030003320	S.RESISTOR	ERJ3GEYJ 101 V (100 Ω)
R13	7030003320	S.RESISTOR	ERJ3GEYJ 101 V (100 Ω)
R14	7030003440	S.RESISTOR	ERJ3GEYJ 102 V (1 kΩ)
R15	7030003320	S.RESISTOR	ERJ3GEYJ 101 V (100 Ω)
R18	7030003560	S.RESISTOR	ERJ3GEYJ 103 V (10 kΩ)
R19	7030003740	S.RESISTOR	ERJ3GEYJ 334 V (330 kΩ)
R20	7030003500	S.RESISTOR	ERJ3GEYJ 332 V (3.3 kΩ)
R21	7030003500	S.RESISTOR	ERJ3GEYJ 332 V (3.3 kΩ)
R22	7030003510	S.RESISTOR	ERJ3GEYJ 392 V (3.9 kΩ)
R23	7030003510	S.RESISTOR	ERJ3GEYJ 392 V (3.9 kΩ)
R26	7310003820	TRIMMER	EVN-D2AA03 B14
R27	7030003500	S.RESISTOR	ERJ3GEYJ 332 V (3.3 kΩ)
R28	7030003360	S.RESISTOR	ERJ3GEYJ 221 V (220 Ω)
R29	7010003400	RESISTOR	ELR20J 1 kΩ
R30	7030003640	S.RESISTOR	ERJ3GEYJ 473 V (47 kΩ)
R31	7030003440	S.RESISTOR	ERJ3GEYJ 102 V (1 kΩ)
R32	7030003520	S.RESISTOR	ERJ3GEYJ 472 V (4.7 kΩ)
R34	7030003620	S.RESISTOR	ERJ3GEYJ 333 V (33 kΩ)
R35	7030003600	S.RESISTOR	ERJ3GEYJ 223 V (22 kΩ)
R38	7030005660	S.RESISTOR	RR0816P-203-D (20 kΩ)
R39	7030005660	S.RESISTOR	RR0816P-203-D (20 kΩ)
R40	7030005660	S.RESISTOR	RR0816P-203-D (20 kΩ)
R41	7030005660	S.RESISTOR	RR0816P-203-D (20 kΩ)
R42	7030005660	S.RESISTOR	RR0816P-203-D (20 kΩ)
R43	7030005660	S.RESISTOR	RR0816P-203-D (20 kΩ)
R44	7030005660	S.RESISTOR	RR0816P-203-D (20 kΩ)
R45	7030005660	S.RESISTOR	RR0816P-203-D (20 kΩ)
R46	7030005660	S.RESISTOR	RR0816P-203-D (20 kΩ)
R47	7030005660	S.RESISTOR	RR0816P-203-D (20 kΩ)
R48	7030005320	S.RESISTOR	RR0816P-103-D (10 kΩ)
R49	7030005320	S.RESISTOR	RR0816P-103-D (10 kΩ)
R50	7030005320	S.RESISTOR	RR0816P-103-D (10 kΩ)
R51	7030005320	S.RESISTOR	RR0816P-103-D (10 kΩ)
R52	7030005320	S.RESISTOR	RR0816P-103-D (10 kΩ)
R53	7030005320	S.RESISTOR	RR0816P-103-D (10 kΩ)
R54	7030005320	S.RESISTOR	RR0816P-103-D (10 kΩ)
R55	7030005320	S.RESISTOR	RR0816P-103-D (10 kΩ)
R56	7030005320	S.RESISTOR	RR0816P-103-D (10 kΩ)
R57	7030005660	S.RESISTOR	RR0816P-203-D (20 kΩ)
R58	7030005660	S.RESISTOR	RR0816P-203-D (20 kΩ)
R59	7030005660	S.RESISTOR	RR0816P-203-D (20 kΩ)
R60	7030005660	S.RESISTOR	RR0816P-203-D (20 kΩ)
R61	7030005660	S.RESISTOR	RR0816P-203-D (20 kΩ)
R62	7030005660	S.RESISTOR	RR0816P-203-D (20 kΩ)
R63	7030005660	S.RESISTOR	RR0816P-203-D (20 kΩ)
R64	7030005660	S.RESISTOR	RR0816P-203-D (20 kΩ)
R65	7030005660	S.RESISTOR	RR0816P-203-D (20 kΩ)
R66	7030005660	S.RESISTOR	RR0816P-203-D (20 kΩ)
R67	7030005660	S.RESISTOR	RR0816P-203-D (20 kΩ)
R68	7030005320	S.RESISTOR	RR0816P-103-D (10 kΩ)
R69	7030005320	S.RESISTOR	RR0816P-103-D (10 kΩ)
R70	7030005320	S.RESISTOR	RR0816P-103-D (10 kΩ)
R71	7030005320	S.RESISTOR	RR0816P-103-D (10 kΩ)
R72	7030005320	S.RESISTOR	RR0816P-103-D (10 kΩ)
R73	7030005320	S.RESISTOR	RR0816P-103-D (10 kΩ)
R74	7030005320	S.RESISTOR	RR0816P-103-D (10 kΩ)
R75	7030005320	S.RESISTOR	RR0816P-103-D (10 kΩ)
R76	7030005320	S.RESISTOR	RR0816P-103-D (10 kΩ)
R77	7030005660	S.RESISTOR	RR0816P-203-D (20 kΩ)
R78	7030003600	S.RESISTOR	ERJ3GEYJ 223 V (22 kΩ)

[MAIN UNIT]

REF. NO.	ORDER NO.	DESCRIPTION	
R79	7030003620	S.RESISTOR	ERJ3GEYJ 333 V (33 kΩ)
R81	7030003440	S.RESISTOR	ERJ3GEYJ 102 V (1 kΩ)
R82	7030003440	S.RESISTOR	ERJ3GEYJ 102 V (1 kΩ)
R83	7030003440	S.RESISTOR	ERJ3GEYJ 102 V (1 kΩ)
R84	7030003440	S.RESISTOR	ERJ3GEYJ 102 V (1 kΩ)
R85	7030003640	S.RESISTOR	ERJ3GEYJ 473 V (47 kΩ)
R86	7030003440	S.RESISTOR	ERJ3GEYJ 102 V (1 kΩ)
R87	7030003640	S.RESISTOR	ERJ3GEYJ 473 V (47 kΩ)
R88	7030003620	S.RESISTOR	ERJ3GEYJ 333 V (33 kΩ)
R89	7030003540	S.RESISTOR	ERJ3GEYJ 682 V (6.8 kΩ)
R90	7030003590	S.RESISTOR	ERJ3GEYJ 183 V (18 kΩ)
R91	7030003680	S.RESISTOR	ERJ3GEYJ 104 V (100 kΩ)
R92	7030003400	S.RESISTOR	ERJ3GEYJ 471 V (470 Ω)
R93	7030003440	S.RESISTOR	ERJ3GEYJ 102 V (1 kΩ)
R94	7030003680	S.RESISTOR	ERJ3GEYJ 104 V (100 kΩ)
R95	7030003680	S.RESISTOR	ERJ3GEYJ 104 V (100 kΩ)
R96	7030003760	S.RESISTOR	ERJ3GEYJ 474 V (470 kΩ)
R97	7030003720	S.RESISTOR	ERJ3GEYJ 224 V (220 kΩ)
R98	7030003720	S.RESISTOR	ERJ3GEYJ 224 V (220 kΩ)
R99	7030003580	S.RESISTOR	ERJ3GEYJ 153 V (15 kΩ)
R100	7030003580	S.RESISTOR	ERJ3GEYJ 153 V (15 kΩ)
R101	7030003640	S.RESISTOR	ERJ3GEYJ 473 V (47 kΩ)
R102	7030003640	S.RESISTOR	ERJ3GEYJ 473 V (47 kΩ)
R103	7030003640	S.RESISTOR	ERJ3GEYJ 473 V (47 kΩ)
R104	7030003640	S.RESISTOR	ERJ3GEYJ 473 V (47 kΩ)
R105	7030003640	S.RESISTOR	ERJ3GEYJ 473 V (47 kΩ)
R106	7030003640	S.RESISTOR	ERJ3GEYJ 473 V (47 kΩ)
R107	7030003640	S.RESISTOR	ERJ3GEYJ 473 V (47 kΩ)
R108	7030003640	S.RESISTOR	ERJ3GEYJ 473 V (47 kΩ)
R109	7030003640	S.RESISTOR	ERJ3GEYJ 473 V (47 kΩ)
R110	7030003800	S.RESISTOR	ERJ3GEYJ 105 V (1 MΩ)
R111	7030003640	S.RESISTOR	ERJ3GEYJ 473 V (47 kΩ)
R112	7030003640	S.RESISTOR	ERJ3GEYJ 473 V (47 kΩ)
R113	7030003640	S.RESISTOR	ERJ3GEYJ 473 V (47 kΩ)
R114	7030003560	S.RESISTOR	ERJ3GEYJ 103 V (10 kΩ)
R115	7030003580	S.RESISTOR	ERJ3GEYJ 153 V (15 kΩ)
R116	7030003560	S.RESISTOR	ERJ3GEYJ 103 V (10 kΩ)
R117	7030003560	S.RESISTOR	ERJ3GEYJ 103 V (10 kΩ)
R118	7030003580	S.RESISTOR	ERJ3GEYJ 153 V (15 kΩ)
R119	7030003560	S.RESISTOR	ERJ3GEYJ 103 V (10 kΩ)
R120	7030003680	S.RESISTOR	ERJ3GEYJ 104 V (100 kΩ)
R121	7030003680	S.RESISTOR	ERJ3GEYJ 104 V (100 kΩ)
R122	7030003680	S.RESISTOR	ERJ3GEYJ 104 V (100 kΩ)
R123	7030003560	S.RESISTOR	ERJ3GEYJ 103 V (10 kΩ)
R124	7030003560	S.RESISTOR	ERJ3GEYJ 103 V (10 kΩ)
R125	7030003560	S.RESISTOR	ERJ3GEYJ 103 V (10 kΩ)
R126	7030003380	S.RESISTOR	ERJ3GEYJ 331 V (330 Ω)
R127	7030003560	S.RESISTOR	ERJ3GEYJ 103 V (10 kΩ)
R128	7030003720	S.RESISTOR	ERJ3GEYJ 224 V (220 kΩ)
R129	7030003560	S.RESISTOR	ERJ3GEYJ 103 V (10 kΩ)
R130	7030003440	S.RESISTOR	ERJ3GEYJ 102 V (1 kΩ)
R131	7030003680	S.RESISTOR	ERJ3GEYJ 104 V (100 kΩ)
R132	7030003800	S.RESISTOR	ERJ3GEYJ 105 V (1 MΩ)
R133	7030003470	S.RESISTOR	ERJ3GEYJ 182 V (1.8 kΩ)
R134	7030003550	S.RESISTOR	ERJ3GEYJ 822 V (8.2 kΩ)
R135	7030003560	S.RESISTOR	ERJ3GEYJ 103 V (10 kΩ)
R136	7030003440	S.RESISTOR	ERJ3GEYJ 102 V (1 kΩ)
R138	7030003560	S.RESISTOR	ERJ3GEYJ 103 V (10 kΩ)
R139	7030003540	S.RESISTOR	ERJ3GEYJ 682 V (6.8 kΩ)
R142	7030003640	S.RESISTOR	ERJ3GEYJ 473 V (47 kΩ)
R143	7030003440	S.RESISTOR	ERJ3GEYJ 102 V (1 kΩ)
R144	7030003440	S.RESISTOR	ERJ3GEYJ 102 V (1 kΩ)
R145	7030003640	S.RESISTOR	ERJ3GEYJ 473 V (47 kΩ)
R146	7030003480	S.RESISTOR	ERJ3GEYJ 222 V (2.2 kΩ)
R147	7030003640	S.RESISTOR	ERJ3GEYJ 473 V (47 kΩ)
R148	7030003440	S.RESISTOR	ERJ3GEYJ 102 V (1 kΩ)
R149	7030003440	S.RESISTOR	ERJ3GEYJ 102 V (1 kΩ)
R150	7030003640	S.RESISTOR	ERJ3GEYJ 473 V (47 kΩ)
R151	7030003640	S.RESISTOR	ERJ3GEYJ 473 V (47 kΩ)
R152	7030003320	S.RESISTOR	ERJ3GEYJ 101 V (100 Ω)
R153	7030003320	S.RESISTOR	ERJ3GEYJ 101 V (100 Ω)
R154	7030003320	S.RESISTOR	ERJ3GEYJ 101 V (100 Ω)
R155	7030003320	S.RESISTOR	ERJ3GEYJ 101 V (100 Ω)
R156	7030003320	S.RESISTOR	ERJ3GEYJ 101 V (100 Ω)
R157	7030003320	S.RESISTOR	ERJ3GEYJ 101 V (100 Ω)
R158	7030003520	S.RESISTOR	ERJ3GEYJ 472 V (4.7 kΩ)

S.=Surface mount

ManualsPlus.com

[MAIN UNIT]

REF. NO.	ORDER NO.	DESCRIPTION	
R159	7030003320	S.RESISTOR	ERJ3GEYJ 101 V (100 Ω)
R160	7030003320	S.RESISTOR	ERJ3GEYJ 101 V (100 Ω)
R161	7030003320	S.RESISTOR	ERJ3GEYJ 101 V (100 Ω)
R162	7030003320	S.RESISTOR	ERJ3GEYJ 101 V (100 Ω)
R163	7030003320	S.RESISTOR	ERJ3GEYJ 101 V (100 Ω)
R164	7030003440	S.RESISTOR	ERJ3GEYJ 102 V (1 kΩ)
R165	7030003440	S.RESISTOR	ERJ3GEYJ 102 V (1 kΩ)
R166	7030003440	S.RESISTOR	ERJ3GEYJ 102 V (1 kΩ)
R167	7030003440	S.RESISTOR	ERJ3GEYJ 102 V (1 kΩ)
R168	7030003320	S.RESISTOR	ERJ3GEYJ 101 V (100 Ω)
R169	7030003440	S.RESISTOR	ERJ3GEYJ 102 V (1 kΩ)
R170	7030003320	S.RESISTOR	ERJ3GEYJ 101 V (100 Ω)
R171	7030003320	S.RESISTOR	ERJ3GEYJ 101 V (100 Ω)
R172	7030003320	S.RESISTOR	ERJ3GEYJ 101 V (100 Ω)
R173	7030003320	S.RESISTOR	ERJ3GEYJ 101 V (100 Ω)
R174	7030003320	S.RESISTOR	ERJ3GEYJ 101 V (100 Ω)
R175	7030003320	S.RESISTOR	ERJ3GEYJ 101 V (100 Ω)
R176	7030003440	S.RESISTOR	ERJ3GEYJ 102 V (1 kΩ)
R178	7030003440	S.RESISTOR	ERJ3GEYJ 102 V (1 kΩ)
R179	7030003440	S.RESISTOR	ERJ3GEYJ 102 V (1 kΩ)
R180	7030003320	S.RESISTOR	ERJ3GEYJ 101 V (100 Ω)
R181	7030003320	S.RESISTOR	ERJ3GEYJ 101 V (100 Ω)
R182	7030003320	S.RESISTOR	ERJ3GEYJ 101 V (100 Ω)
R183	7030003320	S.RESISTOR	ERJ3GEYJ 101 V (100 Ω)
R185	7030003440	S.RESISTOR	ERJ3GEYJ 102 V (1 kΩ)
R197	7030003440	S.RESISTOR	ERJ3GEYJ 102 V (1 kΩ)
R198	7030003560	S.RESISTOR	ERJ3GEYJ 103 V (10 kΩ)
R200	7030003520	S.RESISTOR	ERJ3GEYJ 472 V (4.7 kΩ)
R201	7310003960	TRIMMER	EVN-D2AA03 B53 (502)
R202	7030003540	S.RESISTOR	ERJ3GEYJ 682 V (6.8 kΩ)
R203	7030003500	S.RESISTOR	ERJ3GEYJ 332 V (3.3 kΩ)
R204	7030003500	S.RESISTOR	ERJ3GEYJ 332 V (3.3 kΩ)
R205	7030003680	S.RESISTOR	ERJ3GEYJ 104 V (100 kΩ)
R207	7030005870	S.RESISTOR	RR0816R-104-D (100 kΩ)
R208	7030005870	S.RESISTOR	RR0816R-104-D (100 kΩ)
R209	7030003680	S.RESISTOR	ERJ3GEYJ 104 V (100 kΩ)
R211	7030005870	S.RESISTOR	RR0816R-104-D (100 kΩ)
R212	7030005870	S.RESISTOR	RR0816R-104-D (100 kΩ)
R213	7030003440	S.RESISTOR	ERJ3GEYJ 102 V (1 kΩ)
R214	7030003640	S.RESISTOR	ERJ3GEYJ 473 V (47 kΩ)
R215	7030003320	S.RESISTOR	ERJ3GEYJ 101 V (100 Ω)
R216	7030003320	S.RESISTOR	ERJ3GEYJ 101 V (100 Ω)
R218	7030001090	S.RESISTOR	MCR50JZHJ 47 Ω (470)
R219	7030005980	S.RESISTOR	RR0816P-333-D (33 kΩ)
R220	7030006040	S.RESISTOR	RR0816P-622-D (6.2 kΩ)
R221	7030003640	S.RESISTOR	ERJ3GEYJ 473 V (47 kΩ)
R222	7030003540	S.RESISTOR	ERJ3GEYJ 682 V (6.8 kΩ)
R223	7030003570	S.RESISTOR	ERJ3GEYJ 123 V (12 kΩ)
R224	7030003630	S.RESISTOR	ERJ3GEYJ 393 V (39 kΩ)
R225	7030003560	S.RESISTOR	ERJ3GEYJ 103 V (10 kΩ)
R226	7030003380	S.RESISTOR	ERJ3GEYJ 331 V (330 Ω)
R227	7030001190	S.RESISTOR	MCR50JZHJ 330 Ω (331)
R229	7030003640	S.RESISTOR	ERJ3GEYJ 473 V (47 kΩ)
R230	7030003320	S.RESISTOR	ERJ3GEYJ 101 V (100 Ω)
R231	7030003320	S.RESISTOR	ERJ3GEYJ 101 V (100 Ω)
R232	7030003640	S.RESISTOR	ERJ3GEYJ 473 V (47 kΩ)
R233	7030003440	S.RESISTOR	ERJ3GEYJ 102 V (1 kΩ)
R234	7030003440	S.RESISTOR	ERJ3GEYJ 102 V (1 kΩ)
R235	7030003440	S.RESISTOR	ERJ3GEYJ 102 V (1 kΩ)
R236	7030003440	S.RESISTOR	ERJ3GEYJ 102 V (1 kΩ)
R237	7030003440	S.RESISTOR	ERJ3GEYJ 102 V (1 kΩ)
R238	7030003440	S.RESISTOR	ERJ3GEYJ 102 V (1 kΩ)
R239	7030003720	S.RESISTOR	ERJ3GEYJ 224 V (220 kΩ)
R240	7030003720	S.RESISTOR	ERJ3GEYJ 224 V (220 kΩ)
R241	7030003710	S.RESISTOR	ERJ3GEYJ 184 V (180 kΩ)
R242	7030003480	S.RESISTOR	ERJ3GEYJ 222 V (2.2 kΩ)
R243	7030003680	S.RESISTOR	ERJ3GEYJ 104 V (100 kΩ)
R244	7030003680	S.RESISTOR	ERJ3GEYJ 104 V (100 kΩ)
R245	7030003560	S.RESISTOR	ERJ3GEYJ 103 V (10 kΩ)
R246	7030003560	S.RESISTOR	ERJ3GEYJ 103 V (10 kΩ)
R247	7030003640	S.RESISTOR	ERJ3GEYJ 473 V (47 kΩ)
R248	7030003550	S.RESISTOR	ERJ3GEYJ 822 V (8.2 kΩ)
R249	7030003440	S.RESISTOR	ERJ3GEYJ 102 V (1 kΩ)
R250	7030003320	S.RESISTOR	ERJ3GEYJ 101 V (100 Ω)
R251	7030005660	S.RESISTOR	RR0816P-203-D (20 kΩ)
R252	7030006460	S.RESISTOR	RR0816P-152-D (1.5 kΩ)

[MAIN UNIT]

REF. NO.	ORDER NO.	DESCRIPTION	
R253	7030005660	S.RESISTOR	RR0816P-203-D (20 kΩ)
R254	7030006460	S.RESISTOR	RR0816P-152-D (1.5 kΩ)
R255	7030003320	S.RESISTOR	ERJ3GEYJ 101 V (100 Ω)
R256	7030003500	S.RESISTOR	ERJ3GEYJ 332 V (3.3 kΩ)
R257	7030003480	S.RESISTOR	ERJ3GEYJ 222 V (2.2 kΩ)
R258	7030003570	S.RESISTOR	ERJ3GEYJ 123 V (12 kΩ)
R259	7030003480	S.RESISTOR	ERJ3GEYJ 222 V (2.2 kΩ)
R260	7030003680	S.RESISTOR	ERJ3GEYJ 104 V (100 kΩ)
R262	7030003320	S.RESISTOR	ERJ3GEYJ 101 V (100 Ω)
R263	7030003320	S.RESISTOR	ERJ3GEYJ 101 V (100 Ω)
R264	7030003320	S.RESISTOR	ERJ3GEYJ 101 V (100 Ω)
R265	7030003580	S.RESISTOR	ERJ3GEYJ 153 V (15 kΩ)
R266	7030003580	S.RESISTOR	ERJ3GEYJ 153 V (15 kΩ)
R267	7030003380	S.RESISTOR	ERJ3GEYJ 331 V (330 Ω)
R268	7030003500	S.RESISTOR	ERJ3GEYJ 332 V (3.3 kΩ)
R269	7030003510	S.RESISTOR	ERJ3GEYJ 392 V (3.9 kΩ)
R271	7010006620	RESISTOR	R50XJ 0.75 Ω
R272	7030003640	S.RESISTOR	ERJ3GEYJ 473 V (47 kΩ)
R273	7030003680	S.RESISTOR	ERJ3GEYJ 104 V (100 kΩ)
R274	7030003640	S.RESISTOR	ERJ3GEYJ 473 V (47 kΩ)
R275	7030003450	S.RESISTOR	ERJ3GEYJ 122 V (1.2 kΩ)
R276	7030003440	S.RESISTOR	ERJ3GEYJ 102 V (1 kΩ)
R277	7030003560	S.RESISTOR	ERJ3GEYJ 103 V (10 kΩ)
R278	7030003520	S.RESISTOR	ERJ3GEYJ 472 V (4.7 kΩ)
R279	7030003440	S.RESISTOR	ERJ3GEYJ 102 V (1 kΩ)
R280	7030003440	S.RESISTOR	ERJ3GEYJ 102 V (1 kΩ)
R281	7030003640	S.RESISTOR	ERJ3GEYJ 473 V (47 kΩ)
R282	7030003640	S.RESISTOR	ERJ3GEYJ 473 V (47 kΩ)
R283	7030003640	S.RESISTOR	ERJ3GEYJ 473 V (47 kΩ)
R285	7030003740	S.RESISTOR	ERJ3GEYJ 334 V (330 kΩ)
R286	7030003560	S.RESISTOR	ERJ3GEYJ 103 V (10 kΩ)
C1	4310000380	MYLAR	50 F2D 153J
C2	4310000380	MYLAR	50 F2D 153J
C3	4510005810	S.ELECTROLITIC	ECEV1HAR47R
C4	4310000360	MYLAR	50 F2D 103J
C5	4510004630	S.ELECTROLITIC	ECEV1CA100SR
C6	4310000610	MYLAR	50 F2D 472J
C7	4510004630	S.ELECTROLITIC	ECEV1CA100SR
C8	4030010070	S.CERAMIC	C1608 X7S 1C 104K-T-A
C9	4030010070	S.CERAMIC	C1608 X7S 1C 104K-T-A
C10	4030006850	S.CERAMIC	C1608 JB 1H 471K-T-A
C11	4510005000	ELECTROLITIC	16 MV 220 HC
C12	4510004990	ELECTROLITIC	16 MV 100 HC
C13	4510004990	ELECTROLITIC	16 MV 100 HC
C14	4510004590	ELECTROLITIC	16 MV 470 HC
C15	4510004600	ELECTROLITIC	16 MV 1000 HC
C16	4030006880	S.CERAMIC	C1608 JB 1H 472K-T-A
C17	4030010070	S.CERAMIC	C1608 X7S 1C 104K-T-A
C18	4030007150	S.CERAMIC	C1608 CH 1H 151J-T-A
C20	4030006850	S.CERAMIC	C1608 JB 1H 471K-T-A
C21	4510004630	S.ELECTROLITIC	ECEV1CA100SR
C23	4510004630	S.ELECTROLITIC	ECEV1CA100SR
C24	4030006880	S.CERAMIC	C1608 JB 1H 472K-T-A
C25	4510005740	S.ELECTROLITIC	ECEV1HAR22SR
C26	4030007130	S.CERAMIC	C1608 CH 1H 101J-T-A
C28	4510004650	S.ELECTROLITIC	ECEV1EA4R7SR
C29	4030008920	S.CERAMIC	C1608 JB 1C 473K-T-A
C30	4510004640	S.ELECTROLITIC	ECEV1CA470SP
C31	4030006880	S.CERAMIC	C1608 JB 1H 472K-T-A
C32	4030006880	S.CERAMIC	C1608 JB 1H 472K-T-A
C33	4510004640	S.ELECTROLITIC	ECEV1CA470SP
C34	4510004650	S.ELECTROLITIC	ECEV1EA4R7SR
C35	4030006850	S.CERAMIC	C1608 JB 1H 471K-T-A
C36	4030010210	S.CERAMIC	C3216 JB 1C 105M-T-A
C37	4510004630	S.ELECTROLITIC	ECEV1CA100SR
C38	4510004630	S.ELECTROLITIC	ECEV1CA100SR
C39	4510004630	S.ELECTROLITIC	ECEV1CA100SR
C40	4510004590	ELECTROLITIC	16 MV 470 HC
C41	4030006880	S.CERAMIC	C1608 JB 1H 472K-T-A
C43	4510004630	S.ELECTROLITIC	ECEV1CA100SR
C44	4030006880	S.CERAMIC	C1608 JB 1H 472K-T-A
C45	4510004630	S.ELECTROLITIC	ECEV1CA100SR
C46	4510004630	S.ELECTROLITIC	ECEV1CA100SR
C47	4510004630	S.ELECTROLITIC	ECEV1CA100SR

S.=Surface mount

ManualsPlus.com

[MAIN UNIT]

REF. NO.	ORDER NO.	DESCRIPTION	
C48	4030010070	S.CERAMIC	C1608 X7S 1C 104K-T-A
C49	4030010070	S.CERAMIC	C1608 X7S 1C 104K-T-A
C50	4510004630	S.ELECTROLITIC	ECEV1CA100SR
C51	4510004650	S.ELECTROLITIC	ECEV1EA4R7SR
C53	4030010070	S.CERAMIC	C1608 X7S 1C 104K-T-A
C54	4030007020	S.CERAMIC	C1608 CH 1H 120J-T-A
C55	4030007020	S.CERAMIC	C1608 CH 1H 120J-T-A
C56	4030010070	S.CERAMIC	C1608 X7S 1C 104K-T-A
C57	4030010070	S.CERAMIC	C1608 X7S 1C 104K-T-A
C58	4030010070	S.CERAMIC	C1608 X7S 1C 104K-T-A
C59	4030006880	S.CERAMIC	C1608 JB 1H 472K-T-A
C60	4030006880	S.CERAMIC	C1608 JB 1H 472K-T-A
C61	4030010070	S.CERAMIC	C1608 X7S 1C 104K-T-A
C63	4030006880	S.CERAMIC	C1608 JB 1H 472K-T-A
C64	4030006880	S.CERAMIC	C1608 JB 1H 472K-T-A
C66	4030010070	S.CERAMIC	C1608 X7S 1C 104K-T-A
C67	4030010070	S.CERAMIC	C1608 X7S 1C 104K-T-A
C68	4510004440	S.ELECTROLITIC	ECEV1HA010SR
C69	4030010070	S.CERAMIC	C1608 X7S 1C 104K-T-A
C70	4030010070	S.CERAMIC	C1608 X7S 1C 104K-T-A
C72	4510004630	S.ELECTROLITIC	ECEV1CA100SR
C73	4030010070	S.CERAMIC	C1608 X7S 1C 104K-T-A
C74	4510004640	S.ELECTROLITIC	ECEV1CA470SP
C80	4030006880	S.CERAMIC	C1608 JB 1H 472K-T-A
C82	4030006880	S.CERAMIC	C1608 JB 1H 472K-T-A
C83	4030006880	S.CERAMIC	C1608 JB 1H 472K-T-A
C84	4030006880	S.CERAMIC	C1608 JB 1H 472K-T-A
C85	4030006880	S.CERAMIC	C1608 JB 1H 472K-T-A
C86	4030006880	S.CERAMIC	C1608 JB 1H 472K-T-A
C87	4030006880	S.CERAMIC	C1608 JB 1H 472K-T-A
C88	4030010070	S.CERAMIC	C1608 X7S 1C 104K-T-A
C90	4030006880	S.CERAMIC	C1608 JB 1H 472K-T-A
C92	4030007130	S.CERAMIC	C1608 CH 1H 101J-T-A
C93	4030007130	S.CERAMIC	C1608 CH 1H 101J-T-A
C94	4030007130	S.CERAMIC	C1608 CH 1H 101J-T-A
C95	4030007130	S.CERAMIC	C1608 CH 1H 101J-T-A
C96	4030007130	S.CERAMIC	C1608 CH 1H 101J-T-A
C97	4030007130	S.CERAMIC	C1608 CH 1H 101J-T-A
C98	4030006880	S.CERAMIC	C1608 JB 1H 472K-T-A
C99	4030006880	S.CERAMIC	C1608 JB 1H 472K-T-A
C101	4030007130	S.CERAMIC	C1608 CH 1H 101J-T-A
C102	4030007130	S.CERAMIC	C1608 CH 1H 101J-T-A
C103	4030007130	S.CERAMIC	C1608 CH 1H 101J-T-A
C104	4030007130	S.CERAMIC	C1608 CH 1H 101J-T-A
C105	4030007130	S.CERAMIC	C1608 CH 1H 101J-T-A
C106	4030007130	S.CERAMIC	C1608 CH 1H 101J-T-A
C107	4030007130	S.CERAMIC	C1608 CH 1H 101J-T-A
C109	4030007130	S.CERAMIC	C1608 CH 1H 101J-T-A
C113	4030006880	S.CERAMIC	C1608 JB 1H 472K-T-A
C115	4030007130	S.CERAMIC	C1608 CH 1H 101J-T-A
C116	4030007130	S.CERAMIC	C1608 CH 1H 101J-T-A
C117	4030007130	S.CERAMIC	C1608 CH 1H 101J-T-A
C118	4030007130	S.CERAMIC	C1608 CH 1H 101J-T-A
C120	4030006880	S.CERAMIC	C1608 JB 1H 472K-T-A
C121	4030007130	S.CERAMIC	C1608 CH 1H 101J-T-A
C122	4030007130	S.CERAMIC	C1608 CH 1H 101J-T-A
C123	4030007130	S.CERAMIC	C1608 CH 1H 101J-T-A
C124	4030007130	S.CERAMIC	C1608 CH 1H 101J-T-A
C127	4030006880	S.CERAMIC	C1608 JB 1H 472K-T-A
C137	4510004990	ELECTROLITIC	16 MV 100 HC
C138	4030006880	S.CERAMIC	C1608 JB 1H 472K-T-A
C139	4510004990	ELECTROLITIC	16 MV 100 HC
C140	4310000920	MYLAR	250 MMW 473K
C141	4010005060	CERAMIC	DE0707 SL 330J 3KV
C142	4030006880	S.CERAMIC	C1608 JB 1H 472K-T-A
C143	4030006880	S.CERAMIC	C1608 JB 1H 472K-T-A
C144	4030010070	S.CERAMIC	C1608 X7S 1C 104K-T-A
C145	4030010070	S.CERAMIC	C1608 X7S 1C 104K-T-A
C146	4030010070	S.CERAMIC	C1608 X7S 1C 104K-T-A
C147	4030006880	S.CERAMIC	C1608 JB 1H 472K-T-A
C148	4510004630	S.ELECTROLITIC	ECEV1CA100SR
C149	4030010210	S.CERAMIC	C3216 JB 1C 105M-T-A
C150	4510004990	ELECTROLITIC	16 MV 100 HC
C151	4030010210	S.CERAMIC	C3216 JB 1C 105M-T-A
C152	4510004590	ELECTROLITIC	16 MV 470 HC
C153	4510004590	ELECTROLITIC	16 MV 470 HC

[MAIN UNIT]

REF. NO.	ORDER NO.	DESCRIPTION	
C154	4030007170	S.CERAMIC	C1608 CH 1H 221J-T-A
C155	4030010210	S.CERAMIC	C3216 JB 1C 105M-T-A
C156	4510005000	ELECTROLITIC	16 MV 220 HC
C157	4030006860	S.CERAMIC	C1608 JB 1H 102K-T-A
C158	4030010210	S.CERAMIC	C3216 JB 1C 105M-T-A
C159	4030008920	S.CERAMIC	C1608 JB 1C 473K-T-A
C160	4030009580	S.CERAMIC	C1608 JB 1H 681K-T-A
C161	4030006880	S.CERAMIC	C1608 JB 1H 472K-T-A
C162	4030006880	S.CERAMIC	C1608 JB 1H 472K-T-A
C163	4030006860	S.CERAMIC	C1608 JB 1H 102K-T-A
C164	4510005740	S.ELECTROLITIC	ECEV1HAR22SR
C165	4030010070	S.CERAMIC	C1608 X7S 1C 104K-T-A
C166	4510004650	S.ELECTROLITIC	ECEV1EA4R7SR
C167	4510004650	S.ELECTROLITIC	ECEV1EA4R7SR
C168	4510005890	S.ELECTROLITIC	ECEV1AAN100R
C169	4510004630	S.ELECTROLITIC	ECEV1CA100SR
C170	4510004630	S.ELECTROLITIC	ECEV1CA100SR
C171	4510004630	S.ELECTROLITIC	ECEV1CA100SR
C172	4510004630	S.ELECTROLITIC	ECEV1CA100SR
C173	4310000610	MYLAR	50 F2D 472J
C174	4310000570	MYLAR	50 F2D 222J
C175	4560000040	CERAMIC	D67X5T 1H 684M51
C176	4560000040	CERAMIC	D67X5T 1H 684M51
C177	4560000040	CERAMIC	D67X5T 1H 684M51
C178	4510004650	S.ELECTROLITIC	ECEV1EA4R7SR
C179	4510004650	S.ELECTROLITIC	ECEV1EA4R7SR
C181	4030010070	S.CERAMIC	C1608 X7S 1C 104K-T-A
C182	4510004630	S.ELECTROLITIC	ECEV1CA100SR
C183	4030006880	S.CERAMIC	C1608 JB 1H 472K-T-A
C184	4030010070	S.CERAMIC	C1608 X7S 1C 104K-T-A
C185	4510004650	S.ELECTROLITIC	ECEV1EA4R7SR
C187	4510004440	S.ELECTROLITIC	ECEV1HA010SR
C188	4510004590	ELECTROLITIC	16 MV 470 HC
BT1	3020000110	LITHIUM	CR2032
J1	6510012690	CONNECTOR	53020-0810
J3	6510017650	CONNECTOR	52045-1045
J4	6510017650	CONNECTOR	52045-1045
J7	6510017770	CONNECTOR	52044-1645
J8	6510017750	CONNECTOR	52044-1045
J9	6510017760	CONNECTOR	52044-2045
J10	6510017650	CONNECTOR	52045-1045
J12	6510017770	CONNECTOR	52044-1645
J13	6510017670	CONNECTOR	52045-2045
J15	6510003390	CONNECTOR	B03B-EH-S
J16	6510003390	CONNECTOR	B03B-EH-S
J17	6510008370	CONNECTOR	BBH-1
J18	6510017650	CONNECTOR	52045-1045
J19	6510017790	CONNECTOR	52045-0645
J20	6510017790	CONNECTOR	52045-0645
W1	7030003860	S.JUMPER	ERJ3GE JPW V
W2	7030003860	S.JUMPER	ERJ3GE JPW V
W3	7030003860	S.JUMPER	ERJ3GE JPW V
W34	7030003860	S.JUMPER	ERJ3GE JPW V [USA, ESP, FRA only]
W35	7030003860	S.JUMPER	ERJ3GE JPW V [USA, FRG, UK only]
W36	7030003860	S.JUMPER	ERJ3GE JPW V
WS1	8600034191	CABLE	SX1528 P05MA-1
WS2	8600034200	CABLE	SX1528 P02*J05MA
WS3	8600034211	CABLE	SX1528 P03*04*J11MA-1
WS4	8600034220	CABLE	SX1528 P01*06*J06MA
EP1	0910044313	PCB	B 4291C

S.=Surface mount

ManualsPlus.com

[RF UNIT]

REF. NO.	ORDER NO.	DESCRIPTION	
IC1	1130007700	S.IC	BU4094BCF-T1
IC2	1130007700	S.IC	BU4094BCF-T1
IC3	1160000130	S.IC	TD62783AF (TP1)
IC4	1160000130	S.IC	TD62783AF (TP1)
Q1	1530003150	S.TRANSISTOR	2SC4673D-TD
Q2	1530002060	S.TRANSISTOR	2SC4081 T107 R
Q3	1510000510	S.TRANSISTOR	2SA1576 T107 R
Q4	1560000720	S.FET	2SK2171-4-TD
Q5	1560000720	S.FET	2SK2171-4-TD
Q6	1560000720	S.FET	2SK2171-4-TD
Q7	1560000720	S.FET	2SK2171-4-TD
Q8	1530003150	S.TRANSISTOR	2SC4673D-TD
Q9	1530002060	S.TRANSISTOR	2SC4081 T107 R
Q10	1510000510	S.TRANSISTOR	2SA1576 T107 R
Q11	1560000720	S.FET	2SK2171-4-TD
Q12	1560000720	S.FET	2SK2171-4-TD
Q13	1560000720	S.FET	2SK2171-4-TD
Q14	1560000720	S.FET	2SK2171-4-TD
Q15	1580000620	S.FET	3SK131-T2 MAS
Q16	1580000620	S.FET	3SK131-T2 MAS
Q17	1580000620	S.FET	3SK131-T2 MAS
Q18	1580000620	S.FET	3SK131-T2 MAS
Q19	1580000620	S.FET	3SK131-T2 MAS
Q21	1530002850	S.TRANSISTOR	2SC4116-BL (TE85R)
Q22	1560000720	S.FET	2SK2171-4-TD
Q23	1560000720	S.FET	2SK2171-4-TD
Q24	1560000720	S.FET	2SK2171-4-TD
Q25	1560000720	S.FET	2SK2171-4-TD
Q26	1590000680	S.TRANSISTOR	DTC114EU T107
Q28	1590000680	S.TRANSISTOR	DTC114EU T107
Q30	1590000680	S.TRANSISTOR	DTC114EU T107
Q31	1530003090	S.TRANSISTOR	2SC4213-B (TE85R)
Q32	1530003150	S.TRANSISTOR	2SC4673D-TD
Q33	1590000680	S.TRANSISTOR	DTC114EU T107
Q34	1590000680	S.TRANSISTOR	DTC114EU T107
Q35	1590001330	S.TRANSISTOR	DTA114EU T107
Q36	1530002060	S.TRANSISTOR	2SC4081 T107 R
Q37	1590000680	S.TRANSISTOR	DTC114EU T107
Q38	1590000680	S.TRANSISTOR	DTC114EU T107
Q39	1590000680	S.TRANSISTOR	DTC114EU T107
Q40	1510000510	S.TRANSISTOR	2SA1576 T107 R
Q41	1590000680	S.TRANSISTOR	DTC114EU T107
Q42	1590000680	S.TRANSISTOR	DTC114EU T107
D1	1750000450	S.DIODE	1SV265-TR
D3	1750000440	S.DIODE	1SV263-TL
D4	1750000450	S.DIODE	1SV265-TR
D5	1750000450	S.DIODE	1SV265-TR
D7	1750000440	S.DIODE	1SV263-TL
D8	1750000450	S.DIODE	1SV265-TR
D9	1790000450	S.DIODE	MA862(TX)
D10	1790000450	S.DIODE	MA862(TX)
D12	1790000620	S.DIODE	MA77(TW)
D13	1790000620	S.DIODE	MA77(TW)
D14	1790000620	S.DIODE	MA77(TW)
D15	1790000450	S.DIODE	MA862(TX)
D16	1790000620	S.DIODE	MA77(TW)
D17	1790000620	S.DIODE	MA77(TW)
D18	1750000450	S.DIODE	1SV265-TR
D19	1750000450	S.DIODE	1SV265-TR
D20	1790000620	S.DIODE	MA77(TW)
D21	1790000620	S.DIODE	MA77(TW)
D22	1790000450	S.DIODE	MA862(TX)
D23	1790000450	S.DIODE	MA862(TX)
D24	1790000450	S.DIODE	MA862(TX)
D25	1790000450	S.DIODE	MA862(TX)
D26	1790000450	S.DIODE	MA862(TX)
D27	1790000450	S.DIODE	MA862(TX)
D28	1790000450	S.DIODE	MA862(TX)
D29	1790000450	S.DIODE	MA862(TX)
D30	1750000440	S.DIODE	1SV263-TL
D31	1750000270	S.DIODE	1SS301 (TE85R)
D32	1750000270	S.DIODE	1SS301 (TE85R)

[RF UNIT]

REF. NO.	ORDER NO.	DESCRIPTION	
D33	1790000620	S.DIODE	MA77(TW)
D34	1750000270	S.DIODE	1SS301 (TE85R)
D37	1790000450	S.DIODE	MA862(TX)
D38	1750000270	S.DIODE	1SS301 (TE85R)
D39	1750000270	S.DIODE	1SS301 (TE85R)
D40	1750000270	S.DIODE	1SS301 (TE85R)
D41	1750000270	S.DIODE	1SS301 (TE85R)
D42	1710000270	DIODE	MI204
D43	1710000270	DIODE	MI204
FI1	2010001010	FILTER	69M15B (FL-120)
L1	6200003000	S.COIL	NL 322522T-R22J-3
L2	6200002990	S.COIL	NL 322522T-2R2J-3
L3	6200003000	S.COIL	NL 322522T-R22J-3
L4	6200003020	S.COIL	NL 322522T-R33J-3
L5	6200003000	S.COIL	NL 322522T-R22J-3
L6	6200001830	S.COIL	NL 322522T-100J
L7	6200001830	S.COIL	NL 322522T-100J
L8	6200001830	S.COIL	NL 322522T-100J
L9	6200001830	S.COIL	NL 322522T-100J
L10	6200001830	S.COIL	NL 322522T-100J
L11	6200001830	S.COIL	NL 322522T-100J
L12	6200001830	S.COIL	NL 322522T-100J
L13	6200001830	S.COIL	NL 322522T-100J
L14	6200001830	S.COIL	NL 322522T-100J
L15	6200001830	S.COIL	NL 322522T-100J
L16	6150002980	COIL	LS-309
L17	6200001830	S.COIL	NL 322522T-100J
L18	6140001680	COIL	LR-184
L19	6180001000	COIL	LAL 04NA 102K
L20	6200003320	S.COIL	NL 322522T-3R3J-3
L21	6180001000	COIL	LAL 04NA 102K
L22	6200003040	S.COIL	NL 322522T-R68J-3
L23	6200003040	S.COIL	NL 322522T-R68J-3
L24	6200003030	S.COIL	NL 322522T-R47J-3
L25	6180000990	COIL	LAL 04NA 101K
L26	6200003000	S.COIL	NL 322522T-R22J-3
L27	6200002990	S.COIL	NL 322522T-2R2J-3
L28	6200003000	S.COIL	NL 322522T-R22J-3
L29	6200003020	S.COIL	NL 322522T-R33J-3
L30	6200001830	S.COIL	NL 322522T-100J
L31	6200003000	S.COIL	NL 322522T-R22J-3
L32	6200001830	S.COIL	NL 322522T-100J
L33	6200001830	S.COIL	NL 322522T-100J
L34	6140000630	COIL	LR-85A
L35	6200001830	S.COIL	NL 322522T-100J
L36	6200001830	S.COIL	NL 322522T-100J
L37	6200001830	S.COIL	NL 322522T-100J
L38	6200001830	S.COIL	NL 322522T-100J
L39	6200001830	S.COIL	NL 322522T-100J
L40	6200001830	S.COIL	NL 322522T-100J
L41	6150002980	COIL	LS-309
L42	6200001830	S.COIL	NL 322522T-100J
L43	6140001680	COIL	LR-184
L44	6180001000	COIL	LAL 04NA 102K
L45	6200003320	S.COIL	NL 322522T-3R3J-3
L46	6180001000	COIL	LAL 04NA 102K
L47	6200003040	S.COIL	NL 322522T-R68J-3
L48	6200003040	S.COIL	NL 322522T-R68J-3
L49	6200003030	S.COIL	NL 322522T-R47J-3
L50	6180000990	COIL	LAL 04NA 101K
L51	6150004420	COIL	LS-500
L52	6140001340	COIL	LR-163
L53	6200001830	S.COIL	NL 322522T-100J
L54	6150004250	COIL	LS-471A (C-14922)
L55	6150004280	COIL	LS-484B (C-14927)
L56	6150004280	COIL	LS-484B (C-14927)
L57	6150004270	COIL	LS-483A (C-14924)
L58	6150004250	COIL	LS-471A (C-14922)
L59	6140000930	COIL	LR-116
L60	6150004270	COIL	LS-483A (C-14924)
L61	6180001710	COIL	LAL 03NA 561K
L62	6200003040	S.COIL	NL 322522T-R68J-3

S.=Surface mount

ManualsPlus.com

[RF UNIT]

REF. NO.	ORDER NO.	DESCRIPTION	
L63	6200003330	S.COIL	NL 322522T-1R0J-3
L64	6200003260	S.COIL	NL 322522T-101J
L65	6180000960	COIL	LAL 03NA 102K
L66	6180000960	COIL	LAL 03NA 102K
L67	6180001000	COIL	LAL 04NA 102K
L68	6180001000	COIL	LAL 04NA 102K
L69	6180001000	COIL	LAL 04NA 102K
L70	6180002510	COIL	LAL 04NA 471K
L71	6180002510	COIL	LAL 04NA 471K
L72	6180002510	COIL	LAL 04NA 471K
L73	6180001710	COIL	LAL 03NA 561K
L74	6180002510	COIL	LAL 04NA 471K
L76	6140001060	COIL	LR-130
L77	6200002960	S.COIL	NL 322522T-4R7J-3
L78	6200002960	S.COIL	NL 322522T-4R7J-3
L79	6140001050	COIL	LR-129
L80	6150004460	COIL	LS-497
L81	6140000630	COIL	LR-85A
L82	6180001710	COIL	LAL 03NA 561K
L83	6180001710	COIL	LAL 03NA 561K
L84	6200001710	S.COIL	NL 322522T-220J
L85	6200001710	S.COIL	NL 322522T-220J
L86	6180001000	COIL	LAL 04NA 102K
L87	6180001000	COIL	LAL 04NA 102K
L88	6200003110	S.COIL	NL 322522T-6R8J
L89	6200002960	S.COIL	NL 322522T-4R7J-3
L90	6180000960	COIL	LAL 03NA 102K
L91	6180002860	COIL	EL0606SKI-4R7J
L92	6180002860	COIL	EL0606SKI-4R7J
L93	6180000960	COIL	LAL 03NA 102K
L94	6200002960	S.COIL	NL 322522T-4R7J-3
L95	6200003100	S.COIL	NL 322522T-3R9J-3
L96	6200003320	S.COIL	NL 322522T-3R3J-3
L97	6200002990	S.COIL	NL 322522T-2R2J-3
L98	6180001710	COIL	LAL 03NA 561K
L99	6180002830	COIL	EL0606SKI-2R7J
L100	6180002820	COIL	EL0606SKI-2R2J
L101	6180002820	COIL	EL0606SKI-2R2J
L102	6180002800	COIL	EL0606SKI-1R5J
L103	6180001710	COIL	LAL 03NA 561K
L104	6200003070	S.COIL	NL 322522T-1R5J-3
L105	6200003070	S.COIL	NL 322522T-1R5J-3
L106	6200003070	S.COIL	NL 322522T-1R5J-3
L107	6200003060	S.COIL	NL 322522T-1R2J-3
L108	6200003260	S.COIL	NL 322522T-101J
L109	6200003070	S.COIL	NL 322522T-1R5J-3
L110	6180002790	COIL	EL0606SKI-1R2J
L111	6180002790	COIL	EL0606SKI-1R2J
L112	6180002780	COIL	EL0606SKI-1R0J
L113	6200003260	S.COIL	NL 322522T-101J
L114	6200003080	S.COIL	NL 322522T-1R8J-3
L115	6180002780	COIL	EL0606SKI-1R0J
L116	6180002780	COIL	EL0606SKI-1R0J
L117	6180002790	COIL	EL0606SKI-1R2J
L118	6200003260	S.COIL	NL 322522T-101J
L119	6200002980	S.COIL	NL 322522T-R56J-3
L120	6180002750	COIL	EL0606SKI-R68J(A)
L121	6180002750	COIL	EL0606SKI-R68J(A)
L122	6180002770	COIL	EL0606SKI-R82J(A)
L123	6200003260	S.COIL	NL 322522T-101J
L124	6200003030	S.COIL	NL 322522T-R47J-3
L125	6180002710	COIL	EL0606SKI-R47J(A)
L126	6180002710	COIL	EL0606SKI-R47J(A)
L127	6180002760	COIL	EL0606SKI-R56J(A)
L128	6200003260	S.COIL	NL 322522T-101J
L129	6200003250	S.COIL	NL 322522T-R39J-3
L130	6200003020	S.COIL	NL 322522T-R33J-3
L131	6200003010	S.COIL	NL 322522T-R27J-3
L132	6200003020	S.COIL	NL 322522T-R33J-3
L133	6200003260	S.COIL	NL 322522T-101J
L134	6180000850	COIL	LAL 03NA 4R7K
L135	6180001000	COIL	LAL 04NA 102K
L137	6180002870	COIL	EL0606SKI-5R6J
L138	6180000960	COIL	LAL 03NA 102K
L139	6180001000	COIL	LAL 04NA 102K
L140	6180001000	COIL	LAL 04NA 102K

[RF UNIT]

REF. NO.	ORDER NO.	DESCRIPTION	
L141	6180001000	COIL	LAL 04NA 102K
L142	6180001000	COIL	LAL 04NA 102K
L144	6200003260	S.COIL	NL 322522T-101J
L145	6200003260	S.COIL	NL 322522T-101J
L146	6200003260	S.COIL	NL 322522T-101J
L147	6140000060	COIL	LR-18
L149	6180000990	COIL	LAL 04NA 101K
L150	2040000490	COIL	EXC-ELDR25C
L151	6200001830	S.COIL	NL 322522T-100J
L152	6200001830	S.COIL	NL 322522T-100J
L153	6200003260	S.COIL	NL 322522T-101J
L154	6200001830	S.COIL	NL 322522T-100J
L155	6180001000	COIL	LAL 04NA 102K
L156	6180001000	COIL	LAL 04NA 102K
L157	6200003260	S.COIL	NL 322522T-101J
L160	6200003000	S.COIL	NL 322522T-R22J-3
L161	6150004270	COIL	LS-483A (C-14924)
L162	6180002960	S.COIL	NL 322522T-R18J-3
R1	7030003440	S.RESISTOR	ERJ3GEYJ 102 V (1 kΩ)
R2	7030003420	S.RESISTOR	ERJ3GEYJ 681 V (680 Ω)
R3	7030003530	S.RESISTOR	ERJ3GEYJ 562 V (5.6 kΩ)
R4	7030003200	S.RESISTOR	ERJ3GEYJ 100 V (10 Ω)
R5	7030003320	S.RESISTOR	ERJ3GEYJ 101 V (100 Ω)
R6	7030003450	S.RESISTOR	ERJ3GEYJ 122 V (1.2 kΩ)
R7	7030003300	S.RESISTOR	ERJ3GEYJ 680 V (68 Ω)
R8	7030003400	S.RESISTOR	ERJ3GEYJ 471 V (470 Ω)
R10	7030003590	S.RESISTOR	ERJ3GEYJ 183 V (18 kΩ)
R11	7030003520	S.RESISTOR	ERJ3GEYJ 472 V (4.7 kΩ)
R12	7030003610	S.RESISTOR	ERJ3GEYJ 273 V (27 kΩ)
R13	7030003480	S.RESISTOR	ERJ3GEYJ 222 V (2.2 kΩ)
R14	7030003570	S.RESISTOR	ERJ3GEYJ 123 V (12 kΩ)
R15	7030003440	S.RESISTOR	ERJ3GEYJ 102 V (1 kΩ)
R16	7030003320	S.RESISTOR	ERJ3GEYJ 101 V (100 Ω)
R17	7030003550	S.RESISTOR	ERJ3GEYJ 822 V (8.2 kΩ)
R18	7010003320	RESISTOR	ELR20J 220 Ω
R19	7030003320	S.RESISTOR	ERJ3GEYJ 101 V (100 Ω)
R20	7030003560	S.RESISTOR	ERJ3GEYJ 103 V (10 kΩ)
R21	7030003350	S.RESISTOR	ERJ3GEYJ 181 V (180 Ω)
R22	7030003410	S.RESISTOR	ERJ3GEYJ 561 V (560 Ω)
R23	7030003320	S.RESISTOR	ERJ3GEYJ 101 V (100 Ω)
R24	7310002720	S.TRIMMER	RV-148 (RH03A3AS3X0DA) 472
R25	7030003410	S.RESISTOR	ERJ3GEYJ 561 V (560 Ω)
R26	7030003320	S.RESISTOR	ERJ3GEYJ 101 V (100 Ω)
R27	7030003350	S.RESISTOR	ERJ3GEYJ 181 V (180 Ω)
R28	7030003440	S.RESISTOR	ERJ3GEYJ 102 V (1 kΩ)
R29	7030003420	S.RESISTOR	ERJ3GEYJ 681 V (680 Ω)
R30	7030003530	S.RESISTOR	ERJ3GEYJ 562 V (5.6 kΩ)
R31	7030003320	S.RESISTOR	ERJ3GEYJ 101 V (100 Ω)
R32	7030003450	S.RESISTOR	ERJ3GEYJ 122 V (1.2 kΩ)
R33	7030003300	S.RESISTOR	ERJ3GEYJ 680 V (68 Ω)
R34	7030003400	S.RESISTOR	ERJ3GEYJ 471 V (470 Ω)
R36	7030003480	S.RESISTOR	ERJ3GEYJ 222 V (2.2 kΩ)
R37	7030003440	S.RESISTOR	ERJ3GEYJ 102 V (1 kΩ)
R38	7030003320	S.RESISTOR	ERJ3GEYJ 101 V (100 Ω)
R39	7030003590	S.RESISTOR	ERJ3GEYJ 183 V (18 kΩ)
R40	7030003550	S.RESISTOR	ERJ3GEYJ 822 V (8.2 kΩ)
R41	7030003520	S.RESISTOR	ERJ3GEYJ 472 V (4.7 kΩ)
R42	7030003610	S.RESISTOR	ERJ3GEYJ 273 V (27 kΩ)
R43	7030003480	S.RESISTOR	ERJ3GEYJ 222 V (2.2 kΩ)
R44	7030003570	S.RESISTOR	ERJ3GEYJ 123 V (12 kΩ)
R45	7010003320	RESISTOR	ELR20J 220 Ω
R46	7030003320	S.RESISTOR	ERJ3GEYJ 101 V (100 Ω)
R47	7030003560	S.RESISTOR	ERJ3GEYJ 103 V (10 kΩ)
R48	7030003360	S.RESISTOR	ERJ3GEYJ 221 V (220 Ω)
R49	7030003410	S.RESISTOR	ERJ3GEYJ 561 V (560 Ω)
R50	7310002720	S.TRIMMER	RV-148 (RH03A3AS3X0DA) 472
R51	7030003410	S.RESISTOR	ERJ3GEYJ 561 V (560 Ω)
R52	7030003320	S.RESISTOR	ERJ3GEYJ 101 V (100 Ω)
R53	7030003480	S.RESISTOR	ERJ3GEYJ 222 V (2.2 kΩ)
R54	7510000230	THERMISTOR	ERT-D2ZGL 251S
R55	7510000230	THERMISTOR	ERT-D2ZGL 251S
R56	7030003390	S.RESISTOR	ERJ3GEYJ 391 V (390 Ω)

S.=Surface mount

ManualsPlus.com

[RF UNIT]

REF. NO.	ORDER NO.	DESCRIPTION	
R57	7030003480	S.RESISTOR	ERJ3GEYJ 222 V (2.2 kΩ)
R58	7030003480	S.RESISTOR	ERJ3GEYJ 222 V (2.2 kΩ)
R59	7030003360	S.RESISTOR	ERJ3GEYJ 221 V (220 Ω)
R60	7030003400	S.RESISTOR	ERJ3GEYJ 471 V (470 Ω)
R61	7030003510	S.RESISTOR	ERJ3GEYJ 392 V (3.9 kΩ)
R62	7030003280	S.RESISTOR	ERJ3GEYJ 470 V (47 Ω)
R63	7030003800	S.RESISTOR	ERJ3GEYJ 105 V (1 MΩ)
R66	7030003480	S.RESISTOR	ERJ3GEYJ 222 V (2.2 kΩ)
R67	7030003440	S.RESISTOR	ERJ3GEYJ 102 V (1 kΩ)
R68	7030003530	S.RESISTOR	ERJ3GEYJ 562 V (5.6 kΩ)
R69	7030003360	S.RESISTOR	ERJ3GEYJ 221 V (220 Ω)
R70	7030003320	S.RESISTOR	ERJ3GEYJ 101 V (100 Ω)
R71	7030003570	S.RESISTOR	ERJ3GEYJ 123 V (12 kΩ)
R72	7030003320	S.RESISTOR	ERJ3GEYJ 101 V (100 Ω)
R73	7510000230	THERMISTOR	ERT-D2ZGL 251S
R74	7030003400	S.RESISTOR	ERJ3GEYJ 471 V (470 Ω)
R75	7030003320	S.RESISTOR	ERJ3GEYJ 101 V (100 Ω)
R76	7030003280	S.RESISTOR	ERJ3GEYJ 470 V (47 Ω)
R77	7030003480	S.RESISTOR	ERJ3GEYJ 222 V (2.2 kΩ)
R78	7030003440	S.RESISTOR	ERJ3GEYJ 102 V (1 kΩ)
R79	7030003440	S.RESISTOR	ERJ3GEYJ 102 V (1 kΩ)
R80	7310002670	S.TRIMMER	RV-143 (RH03A3AS2)471
R81	7030003320	S.RESISTOR	ERJ3GEYJ 101 V (100 Ω)
R82	7030003370	S.RESISTOR	ERJ3GEYJ 271 V (270 Ω)
R83	7030003560	S.RESISTOR	ERJ3GEYJ 103 V (10 kΩ)
R84	7030003520	S.RESISTOR	ERJ3GEYJ 472 V (4.7 kΩ)
R85	7030003360	S.RESISTOR	ERJ3GEYJ 221 V (220 Ω)
R86	7030003280	S.RESISTOR	ERJ3GEYJ 470 V (47 Ω)
R87	7030003360	S.RESISTOR	ERJ3GEYJ 221 V (220 Ω)
R88	7030003440	S.RESISTOR	ERJ3GEYJ 102 V (1 kΩ)
R89	7030003320	S.RESISTOR	ERJ3GEYJ 101 V (100 Ω)
R90	7030003400	S.RESISTOR	ERJ3GEYJ 471 V (470 Ω)
R91	7030003400	S.RESISTOR	ERJ3GEYJ 471 V (470 Ω)
R92	7030003640	S.RESISTOR	ERJ3GEYJ 473 V (47 kΩ)
R93	7030003560	S.RESISTOR	ERJ3GEYJ 103 V (10 kΩ)
R94	7030003500	S.RESISTOR	ERJ3GEYJ 332 V (3.3 kΩ)
R95	7030003440	S.RESISTOR	ERJ3GEYJ 102 V (1 kΩ)
R96	7030003560	S.RESISTOR	ERJ3GEYJ 103 V (10 kΩ)
R97	7030003490	S.RESISTOR	ERJ3GEYJ 272 V (2.7 kΩ)
R98	7030003480	S.RESISTOR	ERJ3GEYJ 222 V (2.2 kΩ)
R99	7030003280	S.RESISTOR	ERJ3GEYJ 470 V (47 Ω)
R100	7030003360	S.RESISTOR	ERJ3GEYJ 221 V (220 Ω)
R101	7030003400	S.RESISTOR	ERJ3GEYJ 471 V (470 Ω)
R102	7030003280	S.RESISTOR	ERJ3GEYJ 470 V (47 Ω)
R103	7030003320	S.RESISTOR	ERJ3GEYJ 101 V (100 Ω)
R104	7030003320	S.RESISTOR	ERJ3GEYJ 101 V (100 Ω)
R105	7030003320	S.RESISTOR	ERJ3GEYJ 101 V (100 Ω)
R106	7030003280	S.RESISTOR	ERJ3GEYJ 470 V (47 Ω)
R107	7030003360	S.RESISTOR	ERJ3GEYJ 221 V (220 Ω)
R108	7030003310	S.RESISTOR	ERJ3GEYJ 820 V (82 Ω)
R109	7030003240	S.RESISTOR	ERJ3GEYJ 220 V (22 Ω)
R110	7030003560	S.RESISTOR	ERJ3GEYJ 103 V (10 kΩ)
R111	7030003560	S.RESISTOR	ERJ3GEYJ 103 V (10 kΩ)
R112	7030003320	S.RESISTOR	ERJ3GEYJ 101 V (100 Ω)
R113	7030003320	S.RESISTOR	ERJ3GEYJ 101 V (100 Ω)
R114	7030003320	S.RESISTOR	ERJ3GEYJ 101 V (100 Ω)
R115	7030003320	S.RESISTOR	ERJ3GEYJ 101 V (100 Ω)
R116	7030003320	S.RESISTOR	ERJ3GEYJ 101 V (100 Ω)
R117	7030003300	S.RESISTOR	ERJ3GEYJ 680 V (68 Ω)
R118	7030003320	S.RESISTOR	ERJ3GEYJ 101 V (100 Ω)
R119	7030003320	S.RESISTOR	ERJ3GEYJ 101 V (100 Ω)
R120	7030003320	S.RESISTOR	ERJ3GEYJ 101 V (100 Ω)
R121	7030003320	S.RESISTOR	ERJ3GEYJ 101 V (100 Ω)
R122	7030003320	S.RESISTOR	ERJ3GEYJ 101 V (100 Ω)
R123	7030003320	S.RESISTOR	ERJ3GEYJ 101 V (100 Ω)
R124	7030003320	S.RESISTOR	ERJ3GEYJ 101 V (100 Ω)
R125	7030003320	S.RESISTOR	ERJ3GEYJ 101 V (100 Ω)
R126	7030003320	S.RESISTOR	ERJ3GEYJ 101 V (100 Ω)
R127	7030003320	S.RESISTOR	ERJ3GEYJ 101 V (100 Ω)
R128	7030003320	S.RESISTOR	ERJ3GEYJ 101 V (100 Ω)
R129	7030003320	S.RESISTOR	ERJ3GEYJ 101 V (100 Ω)
R130	7030003400	S.RESISTOR	ERJ3GEYJ 471 V (470 Ω)
R131	7010003300	RESISTOR	ELR20J 150 Ω
R132	7010003240	RESISTOR	ELR20J 47 Ω
R133	7010003260	RESISTOR	ELR20J 68 Ω
R134	7010003280	RESISTOR	ELR20J 100 Ω

[RF UNIT]

REF. NO.	ORDER NO.	DESCRIPTION	
R135	7010003280	RESISTOR	ELR20J 100 Ω
R136	7010003280	RESISTOR	ELR20J 100 Ω
R141	7030003310	S.RESISTOR	ERJ3GEYJ 820 V (82 Ω)
R142	7030003420	S.RESISTOR	ERJ3GEYJ 681 V (680 Ω)
R143	7030003510	S.RESISTOR	ERJ3GEYJ 392 V (3.9 kΩ)
R144	7010003130	RESISTOR	ELR20J 5.6 Ω
R145	7010004030	RESISTOR	R20J 47 Ω
R146	7010003150	RESISTOR	ELR20J 8.2 Ω
R147	7010003300	RESISTOR	ELR20J 150 Ω
R148	7010003150	RESISTOR	ELR20J 8.2 Ω
R149	7030003560	S.RESISTOR	ERJ3GEYJ 103 V (10 kΩ)
R150	7030003560	S.RESISTOR	ERJ3GEYJ 103 V (10 kΩ)
R151	7030003560	S.RESISTOR	ERJ3GEYJ 103 V (10 kΩ)
R152	7030003560	S.RESISTOR	ERJ3GEYJ 103 V (10 kΩ)
R153	7030003560	S.RESISTOR	ERJ3GEYJ 103 V (10 kΩ)
R154	7030003560	S.RESISTOR	ERJ3GEYJ 103 V (10 kΩ)
R155	7030003560	S.RESISTOR	ERJ3GEYJ 103 V (10 kΩ)
R156	7030003560	S.RESISTOR	ERJ3GEYJ 103 V (10 kΩ)
R157	7030003200	S.RESISTOR	ERJ3GEYJ 100 V (10 Ω)
R158	7030003200	S.RESISTOR	ERJ3GEYJ 100 V (10 Ω)
R159	7030003200	S.RESISTOR	ERJ3GEYJ 100 V (10 Ω)
R160	7030003200	S.RESISTOR	ERJ3GEYJ 100 V (10 Ω)
R161	7030003200	S.RESISTOR	ERJ3GEYJ 100 V (10 Ω)
R162	7030003200	S.RESISTOR	ERJ3GEYJ 100 V (10 Ω)
R163	7030003200	S.RESISTOR	ERJ3GEYJ 100 V (10 Ω)
R164	7030003200	S.RESISTOR	ERJ3GEYJ 100 V (10 Ω)
R165	7030003560	S.RESISTOR	ERJ3GEYJ 103 V (10 kΩ)
R166	7030003560	S.RESISTOR	ERJ3GEYJ 103 V (10 kΩ)
R167	7030003560	S.RESISTOR	ERJ3GEYJ 103 V (10 kΩ)
R168	7030003560	S.RESISTOR	ERJ3GEYJ 103 V (10 kΩ)
R169	7030003560	S.RESISTOR	ERJ3GEYJ 103 V (10 kΩ)
R170	7030003560	S.RESISTOR	ERJ3GEYJ 103 V (10 kΩ)
R171	7030003560	S.RESISTOR	ERJ3GEYJ 103 V (10 kΩ)
R172	7030003200	S.RESISTOR	ERJ3GEYJ 100 V (10 Ω)
R173	7030003200	S.RESISTOR	ERJ3GEYJ 100 V (10 Ω)
R174	7030003200	S.RESISTOR	ERJ3GEYJ 100 V (10 Ω)
R179	7030003600	S.RESISTOR	ERJ3GEYJ 223 V (22 kΩ)
R180	7030003200	S.RESISTOR	ERJ3GEYJ 100 V (10 Ω)
R181	7030003520	S.RESISTOR	ERJ3GEYJ 472 V (4.7 kΩ)
R182	7030003480	S.RESISTOR	ERJ3GEYJ 222 V (2.2 kΩ)
R183	7030003640	S.RESISTOR	ERJ3GEYJ 473 V (47 kΩ)
R184	7030003640	S.RESISTOR	ERJ3GEYJ 473 V (47 kΩ)
R185	7030003320	S.RESISTOR	ERJ3GEYJ 101 V (100 Ω)
R186	7030003400	S.RESISTOR	ERJ3GEYJ 471 V (470 Ω)
R187	7030003320	S.RESISTOR	ERJ3GEYJ 101 V (100 Ω)
R188	7030003400	S.RESISTOR	ERJ3GEYJ 471 V (470 Ω)
R189	7030003320	S.RESISTOR	ERJ3GEYJ 101 V (100 Ω)
R190	7030003320	S.RESISTOR	ERJ3GEYJ 101 V (100 Ω)
R191	7030003320	S.RESISTOR	ERJ3GEYJ 101 V (100 Ω)
R192	7030003520	S.RESISTOR	ERJ3GEYJ 472 V (4.7 kΩ)
R193	7030003520	S.RESISTOR	ERJ3GEYJ 472 V (4.7 kΩ)
R194	7030003400	S.RESISTOR	ERJ3GEYJ 471 V (470 Ω)
R195	7030003440	S.RESISTOR	ERJ3GEYJ 102 V (1 kΩ)
R196	7030003360	S.RESISTOR	ERJ3GEYJ 221 V (220 Ω)
R197	7030003520	S.RESISTOR	ERJ3GEYJ 472 V (4.7 kΩ)
R198	7030003480	S.RESISTOR	ERJ3GEYJ 222 V (2.2 kΩ)
R199	7030003400	S.RESISTOR	ERJ3GEYJ 471 V (470 Ω)
R200	7030003560	S.RESISTOR	ERJ3GEYJ 103 V (10 kΩ)
R201	7030003400	S.RESISTOR	ERJ3GEYJ 471 V (470 Ω)
R202	7030003480	S.RESISTOR	ERJ3GEYJ 222 V (2.2 kΩ)
R205	7030003390	S.RESISTOR	ERJ3GEYJ 391 V (390 Ω)
R206	7030003480	S.RESISTOR	ERJ3GEYJ 222 V (2.2 kΩ)
R207	7030003610	S.RESISTOR	ERJ3GEYJ 273 V (27 kΩ)
R208	7030003200	S.RESISTOR	ERJ3GEYJ 100 V (10 Ω)
R209	7030003280	S.RESISTOR	ERJ3GEYJ 470 V (47 Ω)
R210	7030003560	S.RESISTOR	ERJ3GEYJ 103 V (10 kΩ)
R211	7030003560	S.RESISTOR	ERJ3GEYJ 103 V (10 kΩ)
R212	7030003560	S.RESISTOR	ERJ3GEYJ 103 V (10 kΩ)
R213	7030003560	S.RESISTOR	ERJ3GEYJ 103 V (10 kΩ)
C1	4030007090	S.CERAMIC	C1608 CH 1H 470J-T-A
C2	4030007140	S.CERAMIC	C1608 CH 1H 121J-T-A
C3	4030007090	S.CERAMIC	C1608 CH 1H 470J-T-A
C4	4030006810	S.CERAMIC	C1608 SL 1H 271J-T-A
C5	4030006860	S.CERAMIC	C1608 JB 1H 102K-T-A

S.=Surface mount

ManualsPlus.com

[RF UNIT]

REF. NO.	ORDER NO.	DESCRIPTION	
C6	4030006980	S.CERAMIC	C1608 CH 1H 070D-T-A
C7	4030006970	S.CERAMIC	C1608 CH 1H 060D-T-A
C8	4030007020	S.CERAMIC	C1608 CH 1H 120J-T-A
C9	4030010780	S.CERAMIC	C1608 CH 1H 1R5C-T-A
C10	4030006940	S.CERAMIC	C1608 CH 1H 030C-T-A
C11	4030006880	S.CERAMIC	C1608 JB 1H 472K-T-A
C12	4030006860	S.CERAMIC	C1608 JB 1H 102K-T-A
C13	4030006880	S.CERAMIC	C1608 JB 1H 472K-T-A
C14	4030006880	S.CERAMIC	C1608 JB 1H 472K-T-A
C15	4030006880	S.CERAMIC	C1608 JB 1H 472K-T-A
C16	4030006880	S.CERAMIC	C1608 JB 1H 472K-T-A
C17	4030006880	S.CERAMIC	C1608 JB 1H 472K-T-A
C18	4030006880	S.CERAMIC	C1608 JB 1H 472K-T-A
C19	4030006880	S.CERAMIC	C1608 JB 1H 472K-T-A
C20	4030006880	S.CERAMIC	C1608 JB 1H 472K-T-A
C21	4030006880	S.CERAMIC	C1608 JB 1H 472K-T-A
C22	4030006880	S.CERAMIC	C1608 JB 1H 472K-T-A
C23	4030006880	S.CERAMIC	C1608 JB 1H 472K-T-A
C24	4030006880	S.CERAMIC	C1608 JB 1H 472K-T-A
C25	4030010070	S.CERAMIC	C1608 X7S 1C 104K-T-A
C26	4030006860	S.CERAMIC	C1608 JB 1H 102K-T-A
C27	4030006970	S.CERAMIC	C1608 CH 1H 060D-T-A
C28	4030010070	S.CERAMIC	C1608 X7S 1C 104K-T-A
C30	4030010070	S.CERAMIC	C1608 X7S 1C 104K-T-A
C31	4030010070	S.CERAMIC	C1608 X7S 1C 104K-T-A
C33	4030010780	S.CERAMIC	C1608 CH 1H 1R5C-T-A
C34	4030010070	S.CERAMIC	C1608 X7S 1C 104K-T-A
C35	4030007090	S.CERAMIC	C1608 CH 1H 470J-T-A
C36	4030006940	S.CERAMIC	C1608 CH 1H 030C-T-A
C37	4030007120	S.CERAMIC	C1608 CH 1H 820J-T-A
C38	4030006970	S.CERAMIC	C1608 CH 1H 060D-T-A
C39	4030007110	S.CERAMIC	C1608 CH 1H 680J-T-A
C40	4030007090	S.CERAMIC	C1608 CH 1H 470J-T-A
C41	4030007140	S.CERAMIC	C1608 CH 1H 121J-T-A
C42	4030007090	S.CERAMIC	C1608 CH 1H 470J-T-A
C43	4030006810	S.CERAMIC	C1608 SL 1H 271J-T-A
C44	4030006860	S.CERAMIC	C1608 JB 1H 102K-T-A
C45	4030006980	S.CERAMIC	C1608 CH 1H 070D-T-A
C46	4030006970	S.CERAMIC	C1608 CH 1H 060D-T-A
C47	4030007020	S.CERAMIC	C1608 CH 1H 120J-T-A
C48	4030010780	S.CERAMIC	C1608 CH 1H 1R5C-T-A
C49	4030006940	S.CERAMIC	C1608 CH 1H 030C-T-A
C50	4030006880	S.CERAMIC	C1608 JB 1H 472K-T-A
C51	4030006880	S.CERAMIC	C1608 JB 1H 472K-T-A
C52	4030006860	S.CERAMIC	C1608 JB 1H 102K-T-A
C53	4030006880	S.CERAMIC	C1608 JB 1H 472K-T-A
C54	4030006880	S.CERAMIC	C1608 JB 1H 472K-T-A
C55	4030006880	S.CERAMIC	C1608 JB 1H 472K-T-A
C56	4030006880	S.CERAMIC	C1608 JB 1H 472K-T-A
C57	4030006880	S.CERAMIC	C1608 JB 1H 472K-T-A
C58	4030006880	S.CERAMIC	C1608 JB 1H 472K-T-A
C59	4030006880	S.CERAMIC	C1608 JB 1H 472K-T-A
C60	4030006880	S.CERAMIC	C1608 JB 1H 472K-T-A
C61	4030006880	S.CERAMIC	C1608 JB 1H 472K-T-A
C62	4030006880	S.CERAMIC	C1608 JB 1H 472K-T-A
C63	4030006880	S.CERAMIC	C1608 JB 1H 472K-T-A
C64	4030006970	S.CERAMIC	C1608 CH 1H 060D-T-A
C65	4030010070	S.CERAMIC	C1608 X7S 1C 104K-T-A
C66	4030006860	S.CERAMIC	C1608 JB 1H 102K-T-A
C67	4030010070	S.CERAMIC	C1608 X7S 1C 104K-T-A
C69	4030010070	S.CERAMIC	C1608 X7S 1C 104K-T-A
C70	4030010070	S.CERAMIC	C1608 X7S 1C 104K-T-A
C71	4030010780	S.CERAMIC	C1608 CH 1H 1R5C-T-A
C73	4030010070	S.CERAMIC	C1608 X7S 1C 104K-T-A
C74	4030007090	S.CERAMIC	C1608 CH 1H 470J-T-A
C75	4030006940	S.CERAMIC	C1608 CH 1H 030C-T-A
C76	4030007120	S.CERAMIC	C1608 CH 1H 820J-T-A
C77	4030006970	S.CERAMIC	C1608 CH 1H 060D-T-A
C78	4030007110	S.CERAMIC	C1608 CH 1H 680J-T-A
C79	4030006990	S.CERAMIC	C1608 CH 1H 080D-T-A
C82	4030006880	S.CERAMIC	C1608 JB 1H 472K-T-A
C83	4030006970	S.CERAMIC	C1608 CH 1H 060D-T-A
C84	4030006880	S.CERAMIC	C1608 JB 1H 472K-T-A
C85	4030006880	S.CERAMIC	C1608 JB 1H 472K-T-A
C87	4030010070	S.CERAMIC	C1608 X7S 1C 104K-T-A
C88	4030006860	S.CERAMIC	C1608 JB 1H 102K-T-A

[RF UNIT]

REF. NO.	ORDER NO.	DESCRIPTION	
C89	4030006940	S.CERAMIC	C1608 CH 1H 030C-T-A
C90	4030007010	S.CERAMIC	C1608 CH 1H 100D-T-A
C91	4030006880	S.CERAMIC	C1608 JB 1H 472K-T-A
C94	4030006990	S.CERAMIC	C1608 CH 1H 080D-T-A
C95	4030006910	S.CERAMIC	C1608 CH 1H 0R5C-T-A
C96	4030006880	S.CERAMIC	C1608 JB 1H 472K-T-A
C97	4030006880	S.CERAMIC	C1608 JB 1H 472K-T-A
C98	4030006880	S.CERAMIC	C1608 JB 1H 472K-T-A
C99	4030007010	S.CERAMIC	C1608 CH 1H 100D-T-A
C100	4030006990	S.CERAMIC	C1608 CH 1H 080D-T-A
C101	4030010070	S.CERAMIC	C1608 X7S 1C 104K-T-A
C102	4030006860	S.CERAMIC	C1608 JB 1H 102K-T-A
C103	4030010070	S.CERAMIC	C1608 X7S 1C 104K-T-A
C104	4030007050	S.CERAMIC	C1608 CH 1H 220J-T-A
C105	4030007040	S.CERAMIC	C1608 CH 1H 180J-T-A
C106	4030007080	S.CERAMIC	C1608 CH 1H 390J-T-A
C107	4030006970	S.CERAMIC	C1608 CH 1H 060D-T-A
C108	4030007020	S.CERAMIC	C1608 CH 1H 120J-T-A
C109	4030006880	S.CERAMIC	C1608 JB 1H 472K-T-A
C110	4030010070	S.CERAMIC	C1608 X7S 1C 104K-T-A
C111	4030010070	S.CERAMIC	C1608 X7S 1C 104K-T-A
C112	4030010070	S.CERAMIC	C1608 X7S 1C 104K-T-A
C113	4030010070	S.CERAMIC	C1608 X7S 1C 104K-T-A
C114	4030010070	S.CERAMIC	C1608 X7S 1C 104K-T-A
C115	4030010070	S.CERAMIC	C1608 X7S 1C 104K-T-A
C116	4030010070	S.CERAMIC	C1608 X7S 1C 104K-T-A
C117	4030010070	S.CERAMIC	C1608 X7S 1C 104K-T-A
C118	4030010070	S.CERAMIC	C1608 X7S 1C 104K-T-A
C119	4030010070	S.CERAMIC	C1608 X7S 1C 104K-T-A
C120	4510003850	ELECTROLITIC	50 MV 2R2 SW
C121	4030010070	S.CERAMIC	C1608 X7S 1C 104K-T-A
C122	4030010070	S.CERAMIC	C1608 X7S 1C 104K-T-A
C123	4030010070	S.CERAMIC	C1608 X7S 1C 104K-T-A
C124	4030010070	S.CERAMIC	C1608 X7S 1C 104K-T-A
C125	4030010070	S.CERAMIC	C1608 X7S 1C 104K-T-A
C127	4030010070	S.CERAMIC	C1608 X7S 1C 104K-T-A
C128	4030010070	S.CERAMIC	C1608 X7S 1C 104K-T-A
C129	4030010070	S.CERAMIC	C1608 X7S 1C 104K-T-A
C130	4030010070	S.CERAMIC	C1608 X7S 1C 104K-T-A
C132	4030010070	S.CERAMIC	C1608 X7S 1C 104K-T-A
C133	4030007010	S.CERAMIC	C1608 CH 1H 100D-T-A
C134	4030010070	S.CERAMIC	C1608 X7S 1C 104K-T-A
C135	4030010070	S.CERAMIC	C1608 X7S 1C 104K-T-A
C137	4030010070	S.CERAMIC	C1608 X7S 1C 104K-T-A
C138	4030010070	S.CERAMIC	C1608 X7S 1C 104K-T-A
C139	4030006880	S.CERAMIC	C1608 JB 1H 472K-T-A
C140	4030010070	S.CERAMIC	C1608 X7S 1C 104K-T-A
C141	4030009880	S.CERAMIC	C1608 JB 1H 682K-T-A
C142	4030006860	S.CERAMIC	C1608 JB 1H 102K-T-A
C143	4030009630	S.CERAMIC	C1608 JB 1H 822K-T-A
C144	4030010070	S.CERAMIC	C1608 X7S 1C 104K-T-A
C145	4510003790	ELECTROLITIC	16 MV 10 SW
C146	4030010070	S.CERAMIC	C1608 X7S 1C 104K-T-A
C147	4030010070	S.CERAMIC	C1608 X7S 1C 104K-T-A
C148	4030008650	S.CERAMIC	C1608 JB 1H 332K-T-A
C149	4030006840	S.CERAMIC	C1608 SL 1H 391J-T-A
C150	4030008650	S.CERAMIC	C1608 JB 1H 332K-T-A
C151	4030010070	S.CERAMIC	C1608 X7S 1C 104K-T-A
C152	4030010070	S.CERAMIC	C1608 X7S 1C 104K-T-A
C153	4030010070	S.CERAMIC	C1608 X7S 1C 104K-T-A
C154	4030006860	S.CERAMIC	C1608 JB 1H 102K-T-A
C155	4030006810	S.CERAMIC	C1608 SL 1H 271J-T-A
C156	4030009970	S.CERAMIC	C1608 JB 1H 182K-T-A
C157	4030010070	S.CERAMIC	C1608 X7S 1C 104K-T-A
C158	4030010070	S.CERAMIC	C1608 X7S 1C 104K-T-A
C159	4030010020	S.CERAMIC	C1608 JB 1H 122K-T-A
C160	4030006900	S.CERAMIC	C1608 JB 1E 103K-T-A
C161	4030006870	S.CERAMIC	C1608 JB 1H 222K-T-A
C162	4030009490	S.CERAMIC	C1608 JB 1H 821K-T-A
C163	4030007150	S.CERAMIC	C1608 CH 1H 151J-T-A
C164	4030010020	S.CERAMIC	C1608 JB 1H 122K-T-A
C165	4030010070	S.CERAMIC	C1608 X7S 1C 104K-T-A
C166	4030010070	S.CERAMIC	C1608 X7S 1C 104K-T-A
C167	4030009490	S.CERAMIC	C1608 JB 1H 821K-T-A
C168	4030009630	S.CERAMIC	C1608 JB 1H 822K-T-A
C169	4030010020	S.CERAMIC	C1608 JB 1H 122K-T-A

S.=Surface mount

ManualsPlus.com

[RF UNIT]

REF. NO.	ORDER NO.	DESCRIPTION	
C170	4030009580	S.CERAMIC	C1608 JB 1H 681K-T-A
C171	4030007140	S.CERAMIC	C1608 CH 1H 121J-T-A
C172	4030010020	S.CERAMIC	C1608 JB 1H 122K-T-A
C173	4030010070	S.CERAMIC	C1608 X7S 1C 104K-T-A
C174	4030010070	S.CERAMIC	C1608 X7S 1C 104K-T-A
C175	4030010040	S.CERAMIC	C1608 JB 1H 561K-T-A
C176	4030008770	S.CERAMIC	C1608 JB 1H 562K-T-A
C177	4030006860	S.CERAMIC	C1608 JB 1H 102K-T-A
C178	4030006850	S.CERAMIC	C1608 JB 1H 471K-T-A
C179	4030007120	S.CERAMIC	C1608 CH 1H 820J-T-A
C180	4030009490	S.CERAMIC	C1608 JB 1H 821K-T-A
C181	4030010070	S.CERAMIC	C1608 X7S 1C 104K-T-A
C182	4030010070	S.CERAMIC	C1608 X7S 1C 104K-T-A
C183	4030006840	S.CERAMIC	C1608 SL 1H 391J-T-A
C184	4030010770	S.CERAMIC	C1608 JB 1H 392K-T-A
C185	4030009580	S.CERAMIC	C1608 JB 1H 681K-T-A
C186	4030006830	S.CERAMIC	C1608 SL 1H 331J-T-A
C187	4030007110	S.CERAMIC	C1608 CH 1H 680J-T-A
C188	4030010040	S.CERAMIC	C1608 JB 1H 561K-T-A
C189	4030010070	S.CERAMIC	C1608 X7S 1C 104K-T-A
C190	4030010070	S.CERAMIC	C1608 X7S 1C 104K-T-A
C191	4030006830	S.CERAMIC	C1608 SL 1H 331J-T-A
C192	4030008470	S.CERAMIC	C1608 JB 1H 272K-T-A
C193	4030010040	S.CERAMIC	C1608 JB 1H 561K-T-A
C194	4030007160	S.CERAMIC	C1608 CH 1H 181J-T-A
C195	4030007090	S.CERAMIC	C1608 CH 1H 470J-T-A
C196	4030006830	S.CERAMIC	C1608 SL 1H 331J-T-A
C197	4030010070	S.CERAMIC	C1608 X7S 1C 104K-T-A
C198	4030010070	S.CERAMIC	C1608 X7S 1C 104K-T-A
C199	4030007120	S.CERAMIC	C1608 CH 1H 820J-T-A
C200	4030010750	S.CERAMIC	C1608 CH 1H 201J-T-A
C201	4030009970	S.CERAMIC	C1608 JB 1H 182K-T-A
C202	4030006820	S.CERAMIC	C1608 SL 1H 301J-T-A
C203	4030006810	S.CERAMIC	C1608 SL 1H 271J-T-A
C204	4030007080	S.CERAMIC	C1608 CH 1H 390J-T-A
C205	4030006820	S.CERAMIC	C1608 SL 1H 301J-T-A
C206	4030010070	S.CERAMIC	C1608 X7S 1C 104K-T-A
C207	4030010070	S.CERAMIC	C1608 X7S 1C 104K-T-A
C209	4030007150	S.CERAMIC	C1608 CH 1H 151J-T-A
C210	4030010020	S.CERAMIC	C1608 JB 1H 122K-T-A
C211	4030006820	S.CERAMIC	C1608 SL 1H 301J-T-A
C212	4030007150	S.CERAMIC	C1608 CH 1H 151J-T-A
C213	4030007070	S.CERAMIC	C1608 CH 1H 330J-T-A
C214	4030007160	S.CERAMIC	C1608 CH 1H 181J-T-A
C215	4030010070	S.CERAMIC	C1608 X7S 1C 104K-T-A
C216	4030010070	S.CERAMIC	C1608 X7S 1C 104K-T-A
C217	4030007130	S.CERAMIC	C1608 CH 1H 101J-T-A
C218	4030010020	S.CERAMIC	C1608 JB 1H 122K-T-A
C219	4030007160	S.CERAMIC	C1608 CH 1H 181J-T-A
C220	4030007130	S.CERAMIC	C1608 CH 1H 101J-T-A
C221	4030007060	S.CERAMIC	C1608 CH 1H 270J-T-A
C222	4030007160	S.CERAMIC	C1608 CH 1H 181J-T-A
C223	4030010070	S.CERAMIC	C1608 X7S 1C 104K-T-A
C226	4030010020	S.CERAMIC	C1608 JB 1H 122K-T-A
C227	4030006880	S.CERAMIC	C1608 JB 1H 472K-T-A
C228	4030006870	S.CERAMIC	C1608 JB 1H 222K-T-A
C229	4030010070	S.CERAMIC	C1608 X7S 1C 104K-T-A
C230	4030010070	S.CERAMIC	C1608 X7S 1C 104K-T-A
C231	4030006880	S.CERAMIC	C1608 JB 1H 472K-T-A
C232	4030006880	S.CERAMIC	C1608 JB 1H 472K-T-A
C233	4030010070	S.CERAMIC	C1608 X7S 1C 104K-T-A
C234	4030010070	S.CERAMIC	C1608 X7S 1C 104K-T-A
C235	4030009970	S.CERAMIC	C1608 JB 1H 182K-T-A
C236	4030010070	S.CERAMIC	C1608 X7S 1C 104K-T-A
C237	4510003840	ELECTROLITIC	50 MV 1 SW
C241	4030010070	S.CERAMIC	C1608 X7S 1C 104K-T-A
C242	4030010070	S.CERAMIC	C1608 X7S 1C 104K-T-A
C243	4030006900	S.CERAMIC	C1608 JB 1E 103K-T-A
C244	4030006900	S.CERAMIC	C1608 JB 1E 103K-T-A
C245	4030006900	S.CERAMIC	C1608 JB 1E 103K-T-A
C246	4030006900	S.CERAMIC	C1608 JB 1E 103K-T-A
C247	4030006900	S.CERAMIC	C1608 JB 1E 103K-T-A
C248	4030006900	S.CERAMIC	C1608 JB 1E 103K-T-A
C249	4030006900	S.CERAMIC	C1608 JB 1E 103K-T-A
C250	4030006900	S.CERAMIC	C1608 JB 1E 103K-T-A
C251	4030006900	S.CERAMIC	C1608 JB 1E 103K-T-A

[RF UNIT]

REF. NO.	ORDER NO.	DESCRIPTION	
C252	4030006900	S.CERAMIC	C1608 JB 1E 103K-T-A
C253	4030006900	S.CERAMIC	C1608 JB 1E 103K-T-A
C254	4030006900	S.CERAMIC	C1608 JB 1E 103K-T-A
C255	4030006900	S.CERAMIC	C1608 JB 1E 103K-T-A
C256	4030006900	S.CERAMIC	C1608 JB 1E 103K-T-A
C257	4030006900	S.CERAMIC	C1608 JB 1E 103K-T-A
C258	4510003790	ELECTROLITIC	16 MV 10 SW
C259	4030010070	S.CERAMIC	C1608 X7S 1C 104K-T-A
C261	4030006860	S.CERAMIC	C1608 JB 1H 102K-T-A
C262	4510003800	ELECTROLITIC	25 MV 4R7 SW
C263	4030007170	S.CERAMIC	C1608 CH 1H 221J-T-A
C264	4030006990	S.CERAMIC	C1608 CH 1H 080D-T-A
C266	4030010070	S.CERAMIC	C1608 X7S 1C 104K-T-A
C267	4030010070	S.CERAMIC	C1608 X7S 1C 104K-T-A
C268	4030010070	S.CERAMIC	C1608 X7S 1C 104K-T-A
C269	4030010070	S.CERAMIC	C1608 X7S 1C 104K-T-A
C270	4030010070	S.CERAMIC	C1608 X7S 1C 104K-T-A
C271	4030010070	S.CERAMIC	C1608 X7S 1C 104K-T-A
C272	4030006860	S.CERAMIC	C1608 JB 1H 102K-T-A
C273	4030006880	S.CERAMIC	C1608 JB 1H 472K-T-A
C274	4030006880	S.CERAMIC	C1608 JB 1H 472K-T-A
C275	4030007100	S.CERAMIC	C1608 CH 1H 560J-T-A
C277	4030006970	S.CERAMIC	C1608 CH 1H 060D-T-A
C278	4030006970	S.CERAMIC	C1608 CH 1H 060D-T-A
C279	4030008860	S.CERAMIC	C1608 JB 1C 153K-T-A
C280	4030006860	S.CERAMIC	C1608 JB 1H 102K-T-A
C281	4510003790	ELECTROLITIC	16 MV 10 SW
C282	4510003790	ELECTROLITIC	16 MV 10 SW
C283	4030006870	S.CERAMIC	C1608 JB 1H 222K-T-A
C284	4030006860	S.CERAMIC	C1608 JB 1H 102K-T-A
C285	4030006870	S.CERAMIC	C1608 JB 1H 222K-T-A
RL1	6330000050	RELAY	FBR211BD012-M
RL2	6330000050	RELAY	FBR211BD012-M
J1	6510017660	CONNECTOR	52045-1645
J6	6510003250	CONNECTOR	TMP-J01X-A2
J7	6450001130	CONNECTOR	JPJ2042-01-110
J8	6510007020	CONNECTOR	TMP-J01X-V6
WS1	8970021820	CABLE	1.5D CAXIAL (3)/RF
EP1	0910043234	PCB	B 4290D

S.=Surface mount

ManualsPlus.com

[IF UNIT]

REF. NO.	ORDER NO.	DESCRIPTION	
IC1	1110000960	S.IC	NJM4558M(T1)
IC2	1110000960	S.IC	NJM4558M(T1)
IC3	1110000960	S.IC	NJM4558M(T1)
IC4	1110000960	S.IC	NJM4558M(T1)
IC5	1110000960	S.IC	NJM4558M(T1)
IC6	1130007810	S.IC	BU4051BCF-T1
IC7	1110000960	S.IC	NJM4558M(T1)
IC8	1110003350	S.IC	µPC1037GR-E1(MS)
IC9	1130007820	S.IC	BU4052BCF-T1
IC10	1110000960	S.IC	NJM4558M(T1)
IC11	1110000960	S.IC	NJM4558M(T1)
IC12	1110003350	S.IC	µPC1037GR-E1(MS)
IC13	1110003350	S.IC	µPC1037GR-E1(MS)
IC14	1110003350	S.IC	µPC1037GR-E1(MS)
IC15	1110003330	S.IC	TA31136F(EL)
IC16	1130007810	S.IC	BU4051BCF-T1
IC17	1130007810	S.IC	BU4051BCF-T1
IC18	1110003350	S.IC	µPC1037GR-E1(MS)
IC19	1110003350	S.IC	µPC1037GR-E1(MS)
IC20	1110003350	S.IC	µPC1037GR-E1(MS)
IC21	1130005640	S.IC	TC4W53F (TE12L)
IC22	1130001230	S.IC	µPD4001BG-T1
IC23	1130001910	S.IC	µPD4011BG-T1
IC26	1180001250	S.IC	TA7808F(TE16L)
IC27	1180000420	S.IC	TA78L05F (TE12R)
IC28	1130007700	S.IC	BU4094BCF-T1
IC29	1130007700	S.IC	BU4094BCF-T1
IC30	1130007700	S.IC	BU4094BCF-T1
IC31	1130007700	S.IC	BU4094BCF-T1
IC32	1160000130	S.IC	TD62783AF (TP1)
IC33	1160000130	S.IC	TD62783AF (TP1)
IC34	1110003280	S.IC	ND487C1T-E3
IC35	1130004170	S.IC	TC4S01F (TE85R)
Q1	1560000540	S.FET	2SK880-Y (TE85R)
Q2	1560000540	S.FET	2SK880-Y (TE85R)
Q3	1510000510	S.TRANSISTOR	2SA1576 T107 R
Q4	1510000510	S.TRANSISTOR	2SA1576 T107 R
Q5	1530003090	S.TRANSISTOR	2SC4213-B (TE85R)
Q6	1590001330	S.TRANSISTOR	DTA114EU T107
Q7	1590000430	S.TRANSISTOR	DTC144EU T107
Q10	1560000560	S.FET	2SK882-GR (TE85L)
Q11	1590000430	S.TRANSISTOR	DTC144EU T107
Q12	1530002060	S.TRANSISTOR	2SC4081 T107 R
Q13	1580000620	S.FET	3SK131-T2 MAS
Q14	1580000620	S.FET	3SK131-T2 MAS
Q15	1530002060	S.TRANSISTOR	2SC4081 T107 R
Q16	1530002060	S.TRANSISTOR	2SC4081 T107 R
Q17	1530002060	S.TRANSISTOR	2SC4081 T107 R
Q18	1590001330	S.TRANSISTOR	DTA114EU T107
Q19	1590001330	S.TRANSISTOR	DTA114EU T107
Q20	1590001330	S.TRANSISTOR	DTA114EU T107
Q21	1590000430	S.TRANSISTOR	DTC144EU T107
Q22	1590000430	S.TRANSISTOR	DTC144EU T107
Q23	1590000430	S.TRANSISTOR	DTC144EU T107
Q24	1510000510	S.TRANSISTOR	2SA1576 T107 R
Q25	1510000510	S.TRANSISTOR	2SA1576 T107 R
Q26	1510000510	S.TRANSISTOR	2SA1576 T107 R
Q27	1590000430	S.TRANSISTOR	DTC144EU T107
Q28	1590001330	S.TRANSISTOR	DTA114EU T107
Q30	1530002060	S.TRANSISTOR	2SC4081 T107 R
Q31	1530002060	S.TRANSISTOR	2SC4081 T107 R
Q32	1530002060	S.TRANSISTOR	2SC4081 T107 R
Q33	1530002060	S.TRANSISTOR	2SC4081 T107 R
Q34	1590000430	S.TRANSISTOR	DTC144EU T107
Q35	1530002060	S.TRANSISTOR	2SC4081 T107 R
Q36	1580000620	S.FET	3SK131-T2 MAS
Q37	1530002060	S.TRANSISTOR	2SC4081 T107 R
Q38	1530002060	S.TRANSISTOR	2SC4081 T107 R
Q39	1580000620	S.FET	3SK131-T2 MAS
Q40	1590000430	S.TRANSISTOR	DTC144EU T107
Q41	1590001330	S.TRANSISTOR	DTA114EU T107
Q42	1590000430	S.TRANSISTOR	DTC144EU T107
Q43	1590000430	S.TRANSISTOR	DTC144EU T107
Q44	1530002060	S.TRANSISTOR	2SC4081 T107 R

[IF UNIT]

REF. NO.	ORDER NO.	DESCRIPTION	
Q45	1580000620	S.FET	3SK131-T2 MAS
Q46	1580000620	S.FET	3SK131-T2 MAS
Q47	1580000620	S.FET	3SK131-T2 MAS
Q48	1580000620	S.FET	3SK131-T2 MAS
Q49	1580000620	S.FET	3SK131-T2 MAS
Q50	1590000430	S.TRANSISTOR	DTC144EU T107
Q51	1510000510	S.TRANSISTOR	2SA1576 T107 R
Q52	1530002060	S.TRANSISTOR	2SC4081 T107 R
Q53	1590000430	S.TRANSISTOR	DTC144EU T107
Q54	1530002060	S.TRANSISTOR	2SC4081 T107 R
Q55	1530002060	S.TRANSISTOR	2SC4081 T107 R
Q56	1510000510	S.TRANSISTOR	2SA1576 T107 R
Q57	1510000510	S.TRANSISTOR	2SA1576 T107 R
Q58	1530002060	S.TRANSISTOR	2SC4081 T107 R
Q59	1530002060	S.TRANSISTOR	2SC4081 T107 R
Q60	1590000430	S.TRANSISTOR	DTC144EU T107
Q61	1590000430	S.TRANSISTOR	DTC144EU T107
Q62	1560000560	S.FET	2SK882-GR (TE85L)
Q63	1590001450	S.FET	2SJ144-GR (TE85R)
Q64	1530002060	S.TRANSISTOR	2SC4081 T107 R
Q65	1530002060	S.TRANSISTOR	2SC4081 T107 R
Q67	1590000430	S.TRANSISTOR	DTC144EU T107
Q68	1590001330	S.TRANSISTOR	DTA114EU T107
Q69	1590000430	S.TRANSISTOR	DTC144EU T107
Q70	1590001330	S.TRANSISTOR	DTA114EU T107
Q71	1590000430	S.TRANSISTOR	DTC144EU T107
Q72	1540000440	S.TRANSISTOR	2SD1619-T-TD
Q73	1530002060	S.TRANSISTOR	2SC4081 T107 R
Q74	1540000440	S.TRANSISTOR	2SD1619-T-TD
Q75	1530002060	S.TRANSISTOR	2SC4081 T107 R
Q76	1540000440	S.TRANSISTOR	2SD1619-T-TD
Q77	1530002060	S.TRANSISTOR	2SC4081 T107 R
Q78	1530002060	S.TRANSISTOR	2SC4081 T107 R
D1	1750000270	S.DIODE	1SS301 (TE85R)
D2	1750000270	S.DIODE	1SS301 (TE85R)
D3	1750000270	S.DIODE	1SS301 (TE85R)
D4	1750000270	S.DIODE	1SS301 (TE85R)
D8	1790000490	S.DIODE	HSM88AS-TR
D10	1790000490	S.DIODE	HSM88AS-TR
D12	1750000270	S.DIODE	1SS301 (TE85R)
D14	1790000620	S.DIODE	MA77(TW)
D15	1790000620	S.DIODE	MA77(TW)
D16	1790000620	S.DIODE	MA77(TW)
D17	1790000620	S.DIODE	MA77(TW)
D18	1790000620	S.DIODE	MA77(TW)
D19	1790000620	S.DIODE	MA77(TW)
D20	1790000620	S.DIODE	MA77(TW)
D21	1790000620	S.DIODE	MA77(TW)
D22	1790000620	S.DIODE	MA77(TW)
D23	1790000620	S.DIODE	MA77(TW)
D24	1790000620	S.DIODE	MA77(TW)
D25	1790000620	S.DIODE	MA77(TW)
D26	1790000620	S.DIODE	MA77(TW)
D27	1750000380	S.DIODE	1SS312(TE85R)
D29	1750000380	S.DIODE	1SS312(TE85R)
D31	1750000300	S.DIODE	1SS302 (TE85R)
D33	1790000490	S.DIODE	HSM88AS-TR
D35	1790000620	S.DIODE	MA77(TW)
D36	1790000620	S.DIODE	MA77(TW)
D37	1790000620	S.DIODE	MA77(TW)
D38	1790000620	S.DIODE	MA77(TW)
D39	1790000620	S.DIODE	MA77(TW)
D40	1790000620	S.DIODE	MA77(TW)
D41	1790000620	S.DIODE	MA77(TW)
D42	1790000620	S.DIODE	MA77(TW)
D43	1790000620	S.DIODE	MA77(TW)
D44	1790000620	S.DIODE	MA77(TW)
D45	1790000620	S.DIODE	MA77(TW)
D46	1790000620	S.DIODE	MA77(TW)
D47	1790000620	S.DIODE	MA77(TW)
D48	1790000620	S.DIODE	MA77(TW)
D49	1790000620	S.DIODE	MA77(TW)
D50	1790000620	S.DIODE	MA77(TW)
D51	1790000620	S.DIODE	MA77(TW)

S.=Surface mount

ManualsPlus.com

[IF UNIT]

REF. NO.	ORDER NO.	DESCRIPTION	
D52	1790000620	S.DIODE	MA77(TW)
D53	1790000620	S.DIODE	MA77(TW)
D54	1790000620	S.DIODE	MA77(TW)
D55	1790000620	S.DIODE	MA77(TW)
D56	1790000620	S.DIODE	MA77(TW)
D57	1790000620	S.DIODE	MA77(TW)
D58	1790000620	S.DIODE	MA77(TW)
D59	1790000620	S.DIODE	MA77(TW)
D60	1790000620	S.DIODE	MA77(TW)
D61	1750000270	S.DIODE	1SS301 (TE85R)
D63	1750000270	S.DIODE	1SS301 (TE85R)
D65	1720000490	S.VARICAP	SVC252-TA
D66	1750000380	S.DIODE	1SS312(TE85R)
D68	1790000620	S.DIODE	MA77(TW)
D69	1790000620	S.DIODE	MA77(TW)
D70	1790000620	S.DIODE	MA77(TW)
D71	1790000620	S.DIODE	MA77(TW)
D72	1750000380	S.DIODE	1SS312(TE85R)
D75	1790000490	S.DIODE	HSM88AS-TR
D77	1750000270	S.DIODE	1SS301 (TE85R)
D78	1750000270	S.DIODE	1SS301 (TE85R)
D79	1750000270	S.DIODE	1SS301 (TE85R)
D80	1750000270	S.DIODE	1SS301 (TE85R)
D81	1750000270	S.DIODE	1SS301 (TE85R)
D82	1750000270	S.DIODE	1SS301 (TE85R)
D83	1750000270	S.DIODE	1SS301 (TE85R)
D84	1750000270	S.DIODE	1SS301 (TE85R)
D89	1750000270	S.DIODE	1SS301 (TE85R)
D90	1750000270	S.DIODE	1SS301 (TE85R)
D91	1750000270	S.DIODE	1SS301 (TE85R)
D92	1750000270	S.DIODE	1SS301 (TE85R)
D93	1750000270	S.DIODE	1SS301 (TE85R)
D94	1750000270	S.DIODE	1SS301 (TE85R)
D95	1750000270	S.DIODE	1SS301 (TE85R)
D96	1750000270	S.DIODE	1SS301 (TE85R)
D97	1750000270	S.DIODE	1SS301 (TE85R)
D98	1750000270	S.DIODE	1SS301 (TE85R)
D99	1750000270	S.DIODE	1SS301 (TE85R)
D100	1750000270	S.DIODE	1SS301 (TE85R)
D102	1790000620	S.DIODE	MA77(TW)
D103	1750000270	S.DIODE	1SS301 (TE85R)
D104	1750000270	S.DIODE	1SS301 (TE85R)
D105	1750000270	S.DIODE	1SS301 (TE85R)
D106	1750000270	S.DIODE	1SS301 (TE85R)
D107	1750000300	S.DIODE	1SS302 (TE85R)
FI1	2010000270	FILTER	9M15A (FL-23)
FI2	2010000600	FILTER	9M26F (FL-80)
FI3	2010000610	FILTER	M09F05A (FL-32A)
FI4	2010000840	FILTER	X00F27A (FL-96)
FI5	2010000440	FILTER	X00F05A (FL-52A)
FI6	2020000150	CERAMIC	CFW455HT
FI7	2020000120	CERAMIC	CFW455E
FI8	2020000670	CERAMIC	SFE10.7MS2-A
FI9	2010000630	FILTER	9M20A (FL-87)
X1	6050004620	XTAL	CR-231
X2	6070000010	DISCRIMINATOR	CDB455C7A
X3	6050009360	XTAL	CR-511 (9.0105MHz)
L1	6140002060	COIL	LR-225 (RIB3X6.5X3 3A6)
L2	6140002060	COIL	LR-225 (RIB3X6.5X3 3A6)
L3	6150001480	COIL	LS-164
L4	6150000711	COIL	LS-452
L5	6150000711	COIL	LS-452
L6	6150004430	COIL	LS-501 (C-14872)
L7	6150001590	COIL	LS-175
L8	6150001471	COIL	LS-453
L9	6150004430	COIL	LS-501 (C-14872)
L10	6150004430	COIL	LS-501 (C-14872)
L11	6150004430	COIL	LS-501 (C-14872)
L12	6150004430	COIL	LS-501 (C-14872)
L13	6200003090	S.COIL	NL 322522T-2R7J-3

[IF UNIT]

REF. NO.	ORDER NO.	DESCRIPTION	
L14	6150004470	COIL	LS-498
L15	6150004470	COIL	LS-498
L16	6150004440	COIL	LS-495
L17	6150004440	COIL	LS-495
L18	6150002291	COIL	LS-450
L19	6150004480	COIL	LS-499
L20	6150004450	COIL	LS-496
L21	6150004450	COIL	LS-496
L22	6150001200	COIL	LS-133
L23	6180000950	COIL	LAL 03NA 150K
L24	6200003260	S.COIL	NL 322522T-101J
L25	6200001830	S.COIL	NL 322522T-100J
L26	6180000960	COIL	LAL 03NA 102K
L27	2040000490	COIL	EXC-ELDR25C
L28	2040000490	COIL	EXC-ELDR25C
L29	2040000490	COIL	EXC-ELDR25C
L30	2040000490	COIL	EXC-ELDR25C
L31	2040000490	COIL	EXC-ELDR25C
L32	2040000490	COIL	EXC-ELDR25C
L33	2040000490	COIL	EXC-ELDR25C
L34	2040000490	COIL	EXC-ELDR25C
L35	2040000490	COIL	EXC-ELDR25C
L36	6150004460	COIL	LS-497
L37	6200003260	S.COIL	NL 322522T-101J
L38	6200003260	S.COIL	NL 322522T-101J
L39	6150001470	COIL	LS-163
L40	6200003260	S.COIL	NL 322522T-101J
L41	2040000490	COIL	EXC-ELDR25C
L42	6200003260	S.COIL	NL 322522T-101J
L43	6200003260	S.COIL	NL 322522T-101J
R1	7030003370	S.RESISTOR	ERJ3GEYJ 271 V (270 Ω)
R2	7030003220	S.RESISTOR	ERJ3GEYJ 150 V (15 Ω)
R3	7030003370	S.RESISTOR	ERJ3GEYJ 271 V (270 Ω)
R4	7030003440	S.RESISTOR	ERJ3GEYJ 102 V (1 kΩ)
R5	7030003520	S.RESISTOR	ERJ3GEYJ 472 V (4.7 kΩ)
R6	7030003360	S.RESISTOR	ERJ3GEYJ 221 V (220 Ω)
R7	7030003440	S.RESISTOR	ERJ3GEYJ 102 V (1 kΩ)
R8	7030003320	S.RESISTOR	ERJ3GEYJ 101 V (100 Ω)
R9	7030003480	S.RESISTOR	ERJ3GEYJ 222 V (2.2 kΩ)
R10	7030003480	S.RESISTOR	ERJ3GEYJ 222 V (2.2 kΩ)
R11	7030003520	S.RESISTOR	ERJ3GEYJ 472 V (4.7 kΩ)
R12	7030003610	S.RESISTOR	ERJ3GEYJ 273 V (27 kΩ)
R13	7030003400	S.RESISTOR	ERJ3GEYJ 471 V (470 Ω)
R14	7030003320	S.RESISTOR	ERJ3GEYJ 101 V (100 Ω)
R15	7030003280	S.RESISTOR	ERJ3GEYJ 470 V (47 Ω)
R16	7030003760	S.RESISTOR	ERJ3GEYJ 474 V (470 kΩ)
R17	7030003400	S.RESISTOR	ERJ3GEYJ 471 V (470 Ω)
R18	7030003530	S.RESISTOR	ERJ3GEYJ 562 V (5.6 kΩ)
R19	7030003570	S.RESISTOR	ERJ3GEYJ 123 V (12 kΩ)
R20	7030003360	S.RESISTOR	ERJ3GEYJ 221 V (220 Ω)
R21	7030003320	S.RESISTOR	ERJ3GEYJ 101 V (100 Ω)
R22	7030003280	S.RESISTOR	ERJ3GEYJ 470 V (47 Ω)
R23	7310002600	S.TRIMMER	RV-110 (RH03A3AS4X0AA) 473
R24	7030003520	S.RESISTOR	ERJ3GEYJ 472 V (4.7 kΩ)
R25	7030003600	S.RESISTOR	ERJ3GEYJ 223 V (22 kΩ)
R26	7030003520	S.RESISTOR	ERJ3GEYJ 472 V (4.7 kΩ)
R27	7030003280	S.RESISTOR	ERJ3GEYJ 470 V (47 Ω)
R28	7030003360	S.RESISTOR	ERJ3GEYJ 221 V (220 Ω)
R29	7030003360	S.RESISTOR	ERJ3GEYJ 221 V (220 Ω)
R30	7030003580	S.RESISTOR	ERJ3GEYJ 153 V (15 kΩ)
R31	7030003600	S.RESISTOR	ERJ3GEYJ 223 V (22 kΩ) [775DSP]
	7030003440	S.RESISTOR	ERJ3GEYJ 102 V (1 kΩ) [775]
R32	7030003520	S.RESISTOR	ERJ3GEYJ 472 V (4.7 kΩ)
R33	7030003640	S.RESISTOR	ERJ3GEYJ 473 V (47 kΩ)
R34	7030003680	S.RESISTOR	ERJ3GEYJ 104 V (100 kΩ)
R35	7030003640	S.RESISTOR	ERJ3GEYJ 473 V (47 kΩ)
R36	7030003280	S.RESISTOR	ERJ3GEYJ 470 V (47 Ω)
R37	7030003490	S.RESISTOR	ERJ3GEYJ 272 V (2.7 kΩ)
R38	7030003660	S.RESISTOR	ERJ3GEYJ 683 V (68 kΩ)
R39	7030003700	S.RESISTOR	ERJ3GEYJ 154 V (150 kΩ)
R40	7030003380	S.RESISTOR	ERJ3GEYJ 331 V (330 Ω)

S.=Surface mount

ManualsPlus.com

[IF UNIT]

REF. NO.	ORDER NO.	DESCRIPTION	
R41	7030003360	S.RESISTOR	ERJ3GEYJ 221 V (220 Ω)
R42	7030003280	S.RESISTOR	ERJ3GEYJ 470 V (47 Ω)
R43	7030003560	S.RESISTOR	ERJ3GEYJ 103 V (10 kΩ)
R44	7030003580	S.RESISTOR	ERJ3GEYJ 153 V (15 kΩ)
R45	7030003620	S.RESISTOR	ERJ3GEYJ 333 V (33 kΩ)
R46	7030003380	S.RESISTOR	ERJ3GEYJ 331 V (330 Ω)
R47	7030003340	S.RESISTOR	ERJ3GEYJ 151 V (150 Ω)
R48	7030003280	S.RESISTOR	ERJ3GEYJ 470 V (47 Ω)
R49	7030003560	S.RESISTOR	ERJ3GEYJ 103 V (10 kΩ)
R50	7030003580	S.RESISTOR	ERJ3GEYJ 153 V (15 kΩ)
R51	7030003620	S.RESISTOR	ERJ3GEYJ 333 V (33 kΩ)
R52	7030003360	S.RESISTOR	ERJ3GEYJ 221 V (220 Ω)
R53	7030003360	S.RESISTOR	ERJ3GEYJ 221 V (220 Ω)
R54	7030003650	S.RESISTOR	ERJ3GEYJ 563 V (56 kΩ)
R55	7030003640	S.RESISTOR	ERJ3GEYJ 473 V (47 kΩ)
R56	7030003680	S.RESISTOR	ERJ3GEYJ 104 V (100 kΩ)
R57	7030003560	S.RESISTOR	ERJ3GEYJ 103 V (10 kΩ)
R58	7030003650	S.RESISTOR	ERJ3GEYJ 563 V (56 kΩ)
R59	7030003600	S.RESISTOR	ERJ3GEYJ 223 V (22 kΩ)
R60	7030003560	S.RESISTOR	ERJ3GEYJ 103 V (10 kΩ)
R61	7030003560	S.RESISTOR	ERJ3GEYJ 103 V (10 kΩ)
R62	7030003480	S.RESISTOR	ERJ3GEYJ 222 V (2.2 kΩ)
R63	7030003640	S.RESISTOR	ERJ3GEYJ 473 V (47 kΩ)
R64	7030003440	S.RESISTOR	ERJ3GEYJ 102 V (1 kΩ)
R65	7030003420	S.RESISTOR	ERJ3GEYJ 681 V (680 Ω)
R66	7030003520	S.RESISTOR	ERJ3GEYJ 472 V (4.7 kΩ)
R67	7030003560	S.RESISTOR	ERJ3GEYJ 103 V (10 kΩ)
R68	7030003640	S.RESISTOR	ERJ3GEYJ 473 V (47 kΩ)
R69	7030003530	S.RESISTOR	ERJ3GEYJ 562 V (5.6 kΩ)
R70	7030003680	S.RESISTOR	ERJ3GEYJ 104 V (100 kΩ)
R71	7030003520	S.RESISTOR	ERJ3GEYJ 472 V (4.7 kΩ)
R72	7030003520	S.RESISTOR	ERJ3GEYJ 472 V (4.7 kΩ)
R73	7030003320	S.RESISTOR	ERJ3GEYJ 101 V (100 Ω)
R74	7030003520	S.RESISTOR	ERJ3GEYJ 472 V (4.7 kΩ)
R75	7030003460	S.RESISTOR	ERJ3GEYJ 152 V (1.5 kΩ)
R76	7030003360	S.RESISTOR	ERJ3GEYJ 221 V (220 Ω)
R77	7030003340	S.RESISTOR	ERJ3GEYJ 151 V (150 Ω)
R78	7030003540	S.RESISTOR	ERJ3GEYJ 682 V (6.8 kΩ)
R79	7030003460	S.RESISTOR	ERJ3GEYJ 152 V (1.5 kΩ)
R80	7030003460	S.RESISTOR	ERJ3GEYJ 152 V (1.5 kΩ)
R81	7030003360	S.RESISTOR	ERJ3GEYJ 221 V (220 Ω)
R82	7030003340	S.RESISTOR	ERJ3GEYJ 151 V (150 Ω)
R83	7030003540	S.RESISTOR	ERJ3GEYJ 682 V (6.8 kΩ)
R84	7030003460	S.RESISTOR	ERJ3GEYJ 152 V (1.5 kΩ)
R85	7030003440	S.RESISTOR	ERJ3GEYJ 102 V (1 kΩ)
R86	7030003460	S.RESISTOR	ERJ3GEYJ 152 V (1.5 kΩ)
R87	7030003360	S.RESISTOR	ERJ3GEYJ 221 V (220 Ω)
R88	7030003340	S.RESISTOR	ERJ3GEYJ 151 V (150 Ω)
R89	7030003540	S.RESISTOR	ERJ3GEYJ 682 V (6.8 kΩ)
R90	7030003460	S.RESISTOR	ERJ3GEYJ 152 V (1.5 kΩ)
R91	7030003460	S.RESISTOR	ERJ3GEYJ 152 V (1.5 kΩ)
R92	7030003360	S.RESISTOR	ERJ3GEYJ 221 V (220 Ω)
R93	7030003340	S.RESISTOR	ERJ3GEYJ 151 V (150 Ω)
R94	7030003540	S.RESISTOR	ERJ3GEYJ 682 V (6.8 kΩ)
R95	7030003460	S.RESISTOR	ERJ3GEYJ 152 V (1.5 kΩ)
R96	7030003460	S.RESISTOR	ERJ3GEYJ 152 V (1.5 kΩ)
R97	7030003360	S.RESISTOR	ERJ3GEYJ 221 V (220 Ω)
R98	7030003340	S.RESISTOR	ERJ3GEYJ 151 V (150 Ω)
R99	7030003540	S.RESISTOR	ERJ3GEYJ 682 V (6.8 kΩ)
R100	7030003460	S.RESISTOR	ERJ3GEYJ 152 V (1.5 kΩ)
R101	7030003460	S.RESISTOR	ERJ3GEYJ 152 V (1.5 kΩ)
R102	7030003360	S.RESISTOR	ERJ3GEYJ 221 V (220 Ω)
R103	7030003340	S.RESISTOR	ERJ3GEYJ 151 V (150 Ω)
R104	7030003540	S.RESISTOR	ERJ3GEYJ 682 V (6.8 kΩ)
R105	7030003460	S.RESISTOR	ERJ3GEYJ 152 V (1.5 kΩ)
R106	7030003520	S.RESISTOR	ERJ3GEYJ 472 V (4.7 kΩ)
R107	7030003340	S.RESISTOR	ERJ3GEYJ 151 V (150 Ω)
R108	7030003320	S.RESISTOR	ERJ3GEYJ 101 V (100 Ω)
R109	7030003520	S.RESISTOR	ERJ3GEYJ 472 V (4.7 kΩ)
R110	7030003480	S.RESISTOR	ERJ3GEYJ 222 V (2.2 kΩ)
R111	7030003360	S.RESISTOR	ERJ3GEYJ 221 V (220 Ω)
R112	7510000560	THERMISTOR	ERT-D2ZGL 801S
R113	7030003400	S.RESISTOR	ERJ3GEYJ 471 V (470 Ω)
R114	7030003380	S.RESISTOR	ERJ3GEYJ 331 V (330 Ω)
R115	7030003360	S.RESISTOR	ERJ3GEYJ 221 V (220 Ω)
R116	7030003360	S.RESISTOR	ERJ3GEYJ 221 V (220 Ω)

[IF UNIT]

REF. NO.	ORDER NO.	DESCRIPTION	
R117	7030003360	S.RESISTOR	ERJ3GEYJ 221 V (220 Ω)
R118	7030003280	S.RESISTOR	ERJ3GEYJ 470 V (47 Ω)
R119	7030003480	S.RESISTOR	ERJ3GEYJ 222 V (2.2 kΩ)
R120	7030003560	S.RESISTOR	ERJ3GEYJ 103 V (10 kΩ)
R121	7030003630	S.RESISTOR	ERJ3GEYJ 393 V (39 kΩ)
R122	7030003400	S.RESISTOR	ERJ3GEYJ 471 V (470 Ω)
R123	7030003340	S.RESISTOR	ERJ3GEYJ 151 V (150 Ω)
R124	7030003760	S.RESISTOR	ERJ3GEYJ 474 V (470 kΩ)
R125	7030003280	S.RESISTOR	ERJ3GEYJ 470 V (47 Ω)
R126	7030003440	S.RESISTOR	ERJ3GEYJ 102 V (1 kΩ)
R127	7030003520	S.RESISTOR	ERJ3GEYJ 472 V (4.7 kΩ)
R128	7030003340	S.RESISTOR	ERJ3GEYJ 151 V (150 Ω)
R129	7030003480	S.RESISTOR	ERJ3GEYJ 222 V (2.2 kΩ)
R130	7030003520	S.RESISTOR	ERJ3GEYJ 472 V (4.7 kΩ)
R131	7030003520	S.RESISTOR	ERJ3GEYJ 472 V (4.7 kΩ)
R132	7030003480	S.RESISTOR	ERJ3GEYJ 222 V (2.2 kΩ)
R133	7030003580	S.RESISTOR	ERJ3GEYJ 153 V (15 kΩ)
R134	7030003520	S.RESISTOR	ERJ3GEYJ 472 V (4.7 kΩ)
R135	7030003380	S.RESISTOR	ERJ3GEYJ 331 V (330 Ω)
R136	7030003360	S.RESISTOR	ERJ3GEYJ 221 V (220 Ω)
R137	7030003720	S.RESISTOR	ERJ3GEYJ 224 V (220 kΩ)
R138	7030003440	S.RESISTOR	ERJ3GEYJ 102 V (1 kΩ)
R139	7030003440	S.RESISTOR	ERJ3GEYJ 102 V (1 kΩ)
R140	7030003360	S.RESISTOR	ERJ3GEYJ 221 V (220 Ω)
R141	7030003610	S.RESISTOR	ERJ3GEYJ 273 V (27 kΩ)
R142	7030003480	S.RESISTOR	ERJ3GEYJ 222 V (2.2 kΩ)
R143	7030003280	S.RESISTOR	ERJ3GEYJ 470 V (47 Ω)
R145	7030003360	S.RESISTOR	ERJ3GEYJ 221 V (220 Ω)
R146	7030003240	S.RESISTOR	ERJ3GEYJ 220 V (22 Ω)
R147	7310002720	S.TRIMMER	RV-148 (RH03A3AS3X0DA) 472
R148	7030003520	S.RESISTOR	ERJ3GEYJ 472 V (4.7 kΩ)
R149	7030003520	S.RESISTOR	ERJ3GEYJ 472 V (4.7 kΩ)
R150	7030003480	S.RESISTOR	ERJ3GEYJ 222 V (2.2 kΩ)
R152	7030003320	S.RESISTOR	ERJ3GEYJ 101 V (100 Ω)
R153	7030003480	S.RESISTOR	ERJ3GEYJ 222 V (2.2 kΩ)
R154	7030003640	S.RESISTOR	ERJ3GEYJ 473 V (47 kΩ)
R155	7030003360	S.RESISTOR	ERJ3GEYJ 221 V (220 Ω)
R156	7030003340	S.RESISTOR	ERJ3GEYJ 151 V (150 Ω)
R157	7030003480	S.RESISTOR	ERJ3GEYJ 222 V (2.2 kΩ)
R158	7030003480	S.RESISTOR	ERJ3GEYJ 222 V (2.2 kΩ)
R159	7030003640	S.RESISTOR	ERJ3GEYJ 473 V (47 kΩ)
R160	7030003360	S.RESISTOR	ERJ3GEYJ 221 V (220 Ω)
R161	7030003340	S.RESISTOR	ERJ3GEYJ 151 V (150 Ω)
R162	7030003480	S.RESISTOR	ERJ3GEYJ 222 V (2.2 kΩ)
R163	7030003480	S.RESISTOR	ERJ3GEYJ 222 V (2.2 kΩ)
R164	7030003640	S.RESISTOR	ERJ3GEYJ 473 V (47 kΩ)
R165	7030003360	S.RESISTOR	ERJ3GEYJ 221 V (220 Ω)
R166	7030003340	S.RESISTOR	ERJ3GEYJ 151 V (150 Ω)
R167	7030003480	S.RESISTOR	ERJ3GEYJ 222 V (2.2 kΩ)
R168	7030003480	S.RESISTOR	ERJ3GEYJ 222 V (2.2 kΩ)
R169	7030003640	S.RESISTOR	ERJ3GEYJ 473 V (47 kΩ)
R170	7030003360	S.RESISTOR	ERJ3GEYJ 221 V (220 Ω)
R171	7030003340	S.RESISTOR	ERJ3GEYJ 151 V (150 Ω)
R172	7030003480	S.RESISTOR	ERJ3GEYJ 222 V (2.2 kΩ)
R173	7030003480	S.RESISTOR	ERJ3GEYJ 222 V (2.2 kΩ)
R174	7030003640	S.RESISTOR	ERJ3GEYJ 473 V (47 kΩ)
R175	7030003360	S.RESISTOR	ERJ3GEYJ 221 V (220 Ω)
R176	7030003340	S.RESISTOR	ERJ3GEYJ 151 V (150 Ω)
R177	7030003480	S.RESISTOR	ERJ3GEYJ 222 V (2.2 kΩ)
R178	7030003480	S.RESISTOR	ERJ3GEYJ 222 V (2.2 kΩ)
R179	7030003640	S.RESISTOR	ERJ3GEYJ 473 V (47 kΩ)
R180	7030003360	S.RESISTOR	ERJ3GEYJ 221 V (220 Ω)
R181	7030003340	S.RESISTOR	ERJ3GEYJ 151 V (150 Ω)
R182	7030003480	S.RESISTOR	ERJ3GEYJ 222 V (2.2 kΩ)
R183	7030003320	S.RESISTOR	ERJ3GEYJ 101 V (100 Ω)
R184	7030003480	S.RESISTOR	ERJ3GEYJ 222 V (2.2 kΩ)
R185	7030003340	S.RESISTOR	ERJ3GEYJ 151 V (150 Ω)
R186	7030003410	S.RESISTOR	ERJ3GEYJ 561 V (560 Ω)
R187	7030003360	S.RESISTOR	ERJ3GEYJ 221 V (220 Ω)
R188	7030003360	S.RESISTOR	ERJ3GEYJ 221 V (220 Ω)
R189	7030003360	S.RESISTOR	ERJ3GEYJ 221 V (220 Ω)
R190	7030003280	S.RESISTOR	ERJ3GEYJ 470 V (47 Ω)
R191	7030003480	S.RESISTOR	ERJ3GEYJ 222 V (2.2 kΩ)
R192	7030003440	S.RESISTOR	ERJ3GEYJ 102 V (1 kΩ)

S.=Surface mount

ManualsPlus.com

[IF UNIT]

REF. NO.	ORDER NO.	DESCRIPTION	
R193	7310002740	S.TRIMMER	RV-150 (RH03A3A14X0FC) 103
R194	7030003560	S.RESISTOR	ERJ3GEYJ 103 V (10 kΩ)
R195	7030003670	S.RESISTOR	ERJ3GEYJ 823 V (82 kΩ)
R196	7030003330	S.RESISTOR	ERJ3GEYJ 121 V (120 Ω)
R197	7030003320	S.RESISTOR	ERJ3GEYJ 101 V (100 Ω)
R198	7310002690	S.TRIMMER	RV-145 (RH03A3A13X0CA) 102
R199	7030003320	S.RESISTOR	ERJ3GEYJ 101 V (100 Ω)
R200	7030003280	S.RESISTOR	ERJ3GEYJ 470 V (47 Ω)
R201	7030003670	S.RESISTOR	ERJ3GEYJ 823 V (82 kΩ)
R202	7030003560	S.RESISTOR	ERJ3GEYJ 103 V (10 kΩ)
R203	7030003360	S.RESISTOR	ERJ3GEYJ 221 V (220 Ω)
R204	7030003320	S.RESISTOR	ERJ3GEYJ 101 V (100 Ω)
R205	7030003600	S.RESISTOR	ERJ3GEYJ 223 V (22 kΩ)
R206	7030003320	S.RESISTOR	ERJ3GEYJ 101 V (100 Ω)
R207	7030003560	S.RESISTOR	ERJ3GEYJ 103 V (10 kΩ)
R208	7030003440	S.RESISTOR	ERJ3GEYJ 102 V (1 kΩ)
R209	7030003360	S.RESISTOR	ERJ3GEYJ 221 V (220 Ω)
R210	7030003560	S.RESISTOR	ERJ3GEYJ 103 V (10 kΩ)
R211	7030003700	S.RESISTOR	ERJ3GEYJ 154 V (150 kΩ)
R212	7030003440	S.RESISTOR	ERJ3GEYJ 102 V (1 kΩ)
R213	7030003440	S.RESISTOR	ERJ3GEYJ 102 V (1 kΩ)
R214	7030003720	S.RESISTOR	ERJ3GEYJ 224 V (220 kΩ)
R215	7030003440	S.RESISTOR	ERJ3GEYJ 102 V (1 kΩ)
R217	7030003640	S.RESISTOR	ERJ3GEYJ 473 V (47 kΩ)
R218	7030003560	S.RESISTOR	ERJ3GEYJ 103 V (10 kΩ)
R219	7030003640	S.RESISTOR	ERJ3GEYJ 473 V (47 kΩ)
R220	7030003440	S.RESISTOR	ERJ3GEYJ 102 V (1 kΩ)
R221	7030003680	S.RESISTOR	ERJ3GEYJ 104 V (100 kΩ)
R222	7030003530	S.RESISTOR	ERJ3GEYJ 562 V (5.6 kΩ)
R223	7030003520	S.RESISTOR	ERJ3GEYJ 472 V (4.7 kΩ)
R224	7030003320	S.RESISTOR	ERJ3GEYJ 101 V (100 Ω)
R225	7030003630	S.RESISTOR	ERJ3GEYJ 393 V (39 kΩ)
R226	7030003500	S.RESISTOR	ERJ3GEYJ 332 V (3.3 kΩ)
R227	7030003360	S.RESISTOR	ERJ3GEYJ 221 V (220 Ω)
R228	7030003360	S.RESISTOR	ERJ3GEYJ 221 V (220 Ω)
R229	7030003280	S.RESISTOR	ERJ3GEYJ 470 V (47 Ω)
R231	7030003460	S.RESISTOR	ERJ3GEYJ 152 V (1.5 kΩ)
R232	7030003610	S.RESISTOR	ERJ3GEYJ 273 V (27 kΩ)
R233	7310002760	S.TRIMMER	RV-152 (RH03A3AJ4X0HA) 223
R234	7030003740	S.RESISTOR	ERJ3GEYJ 334 V (330 kΩ)
R235	7030003500	S.RESISTOR	ERJ3GEYJ 332 V (3.3 kΩ)
R236	7030003700	S.RESISTOR	ERJ3GEYJ 154 V (150 kΩ)
R237	7030003640	S.RESISTOR	ERJ3GEYJ 473 V (47 kΩ)
R238	7030003580	S.RESISTOR	ERJ3GEYJ 153 V (15 kΩ)
R239	7030003700	S.RESISTOR	ERJ3GEYJ 154 V (150 kΩ)
R240	7030003760	S.RESISTOR	ERJ3GEYJ 474 V (470 kΩ)
R241	7030003550	S.RESISTOR	ERJ3GEYJ 822 V (8.2 kΩ)
R242	7030003480	S.RESISTOR	ERJ3GEYJ 222 V (2.2 kΩ)
R243	7030003610	S.RESISTOR	ERJ3GEYJ 273 V (27 kΩ)
R244	7030003610	S.RESISTOR	ERJ3GEYJ 273 V (27 kΩ)
R245	7030003520	S.RESISTOR	ERJ3GEYJ 472 V (4.7 kΩ)
R246	7030003440	S.RESISTOR	ERJ3GEYJ 102 V (1 kΩ)
R247	7030003440	S.RESISTOR	ERJ3GEYJ 102 V (1 kΩ)
R248	7030003440	S.RESISTOR	ERJ3GEYJ 102 V (1 kΩ)
R249	7030003440	S.RESISTOR	ERJ3GEYJ 102 V (1 kΩ)
R250	7030003440	S.RESISTOR	ERJ3GEYJ 102 V (1 kΩ)
R251	7030003400	S.RESISTOR	ERJ3GEYJ 471 V (470 Ω)
R253	7030003440	S.RESISTOR	ERJ3GEYJ 102 V (1 kΩ)
R254	7030003440	S.RESISTOR	ERJ3GEYJ 102 V (1 kΩ)
R255	7030003440	S.RESISTOR	ERJ3GEYJ 102 V (1 kΩ)
R256	7030003440	S.RESISTOR	ERJ3GEYJ 102 V (1 kΩ)
R257	7030003320	S.RESISTOR	ERJ3GEYJ 101 V (100 Ω)
R258	7030003680	S.RESISTOR	ERJ3GEYJ 104 V (100 kΩ)
R259	7030003280	S.RESISTOR	ERJ3GEYJ 470 V (47 Ω)
R260	7030003440	S.RESISTOR	ERJ3GEYJ 102 V (1 kΩ)
R261	7030003320	S.RESISTOR	ERJ3GEYJ 101 V (100 Ω)
R262	7030003280	S.RESISTOR	ERJ3GEYJ 470 V (47 Ω)
R263	7030003320	S.RESISTOR	ERJ3GEYJ 101 V (100 Ω)
R264	7030003360	S.RESISTOR	ERJ3GEYJ 221 V (220 Ω)
R265	7030003640	S.RESISTOR	ERJ3GEYJ 473 V (47 kΩ)
R266	7030003760	S.RESISTOR	ERJ3GEYJ 474 V (470 kΩ)
R267	7030003680	S.RESISTOR	ERJ3GEYJ 104 V (100 kΩ)
R268	7030003720	S.RESISTOR	ERJ3GEYJ 224 V (220 kΩ)

[IF UNIT]

REF. NO.	ORDER NO.	DESCRIPTION	
R269	7030003360	S.RESISTOR	ERJ3GEYJ 221 V (220 Ω)
R270	7030003280	S.RESISTOR	ERJ3GEYJ 470 V (47 Ω)
R271	7030003720	S.RESISTOR	ERJ3GEYJ 224 V (220 kΩ)
R272	7030003680	S.RESISTOR	ERJ3GEYJ 104 V (100 kΩ)
R273	7310002740	S.TRIMMER	RV-150 (RH03A3A14X0FC) 103
R274	7310002740	S.TRIMMER	RV-150 (RH03A3A14X0FC) 103
R277	7030003560	S.RESISTOR	ERJ3GEYJ 103 V (10 kΩ)
R278	7030003340	S.RESISTOR	ERJ3GEYJ 151 V (150 Ω)
R279	7030003410	S.RESISTOR	ERJ3GEYJ 561 V (560 Ω)
R280	7030003800	S.RESISTOR	ERJ3GEYJ 105 V (1 MΩ)
R281	7310002740	S.TRIMMER	RV-150 (RH03A3A14X0FC) 103
R282	7030003800	S.RESISTOR	ERJ3GEYJ 105 V (1 MΩ)
R283	7030003440	S.RESISTOR	ERJ3GEYJ 102 V (1 kΩ)
R284	7030003440	S.RESISTOR	ERJ3GEYJ 102 V (1 kΩ)
R285	7030003450	S.RESISTOR	ERJ3GEYJ 122 V (1.2 kΩ)
R286	7030003460	S.RESISTOR	ERJ3GEYJ 152 V (1.5 kΩ)
R287	7030003480	S.RESISTOR	ERJ3GEYJ 222 V (2.2 kΩ)
R288	7030003560	S.RESISTOR	ERJ3GEYJ 103 V (10 kΩ)
R289	7030003660	S.RESISTOR	ERJ3GEYJ 683 V (68 kΩ)
R290	7030003660	S.RESISTOR	ERJ3GEYJ 683 V (68 kΩ)
R291	7030003660	S.RESISTOR	ERJ3GEYJ 683 V (68 kΩ)
R292	7310002720	S.TRIMMER	RV-148 (RH03A3AS3X0DA) 472
R293	7030003480	S.RESISTOR	ERJ3GEYJ 222 V (2.2 kΩ)
R294	7310002740	S.TRIMMER	RV-150 (RH03A3A14X0FC) 103
R295	7030003520	S.RESISTOR	ERJ3GEYJ 472 V (4.7 kΩ)
R296	7030003560	S.RESISTOR	ERJ3GEYJ 103 V (10 kΩ)
R297	7310002760	S.TRIMMER	RV-152 (RH03A3AJ4X0HA) 223
R298	7030003510	S.RESISTOR	ERJ3GEYJ 392 V (3.9 kΩ)
R299	7510000240	THERMISTOR	ERT-D2ZGL 332S
R300	7030003540	S.RESISTOR	ERJ3GEYJ 682 V (6.8 kΩ)
R301	7030003600	S.RESISTOR	ERJ3GEYJ 223 V (22 kΩ)
R302	7030003760	S.RESISTOR	ERJ3GEYJ 474 V (470 kΩ)
R303	7030003520	S.RESISTOR	ERJ3GEYJ 472 V (4.7 kΩ)
R304	7030003540	S.RESISTOR	ERJ3GEYJ 682 V (6.8 kΩ)
R305	7030003600	S.RESISTOR	ERJ3GEYJ 223 V (22 kΩ)
R306	7030003600	S.RESISTOR	ERJ3GEYJ 223 V (22 kΩ)
R307	7030003460	S.RESISTOR	ERJ3GEYJ 152 V (1.5 kΩ)
R308	7030003460	S.RESISTOR	ERJ3GEYJ 152 V (1.5 kΩ)
R309	7030003320	S.RESISTOR	ERJ3GEYJ 101 V (100 Ω)
R310	7030003530	S.RESISTOR	ERJ3GEYJ 562 V (5.6 kΩ)
R311	7030003480	S.RESISTOR	ERJ3GEYJ 222 V (2.2 kΩ)
R312	7030003610	S.RESISTOR	ERJ3GEYJ 273 V (27 kΩ)
R313	7030003800	S.RESISTOR	ERJ3GEYJ 105 V (1 MΩ)
R314	7030003610	S.RESISTOR	ERJ3GEYJ 273 V (27 kΩ)
R315	7030003800	S.RESISTOR	ERJ3GEYJ 105 V (1 MΩ)
R316	7030005330	S.RESISTOR	RR0816P-562-D (5.6 kΩ)
R317	7030005330	S.RESISTOR	RR0816P-562-D (5.6 kΩ)
R318	7310003670	S.TRIMMER	EVM-1XSX50 BE2 (221)
R319	7310002740	S.TRIMMER	RV-150 (RH03A3A14X0FC) 103
R320	7310002720	S.TRIMMER	RV-148 (RH03A3AS3X0DA) 472
R321	7030003440	S.RESISTOR	ERJ3GEYJ 102 V (1 kΩ)
R322	7030003670	S.RESISTOR	ERJ3GEYJ 823 V (82 kΩ)
R323	7030003680	S.RESISTOR	ERJ3GEYJ 104 V (100 kΩ)
R324	7030003510	S.RESISTOR	ERJ3GEYJ 392 V (3.9 kΩ)
R325	7030003520	S.RESISTOR	ERJ3GEYJ 472 V (4.7 kΩ)
R326	7030003750	S.RESISTOR	ERJ3GEYJ 394 V (390 kΩ)
R327	7310002580	S.TRIMMER	RV-108 (RH03A3A15X05A) 104
R328	7030003650	S.RESISTOR	ERJ3GEYJ 563 V (56 kΩ)
R329	7030003700	S.RESISTOR	ERJ3GEYJ 154 V (150 kΩ)
R330	7030003720	S.RESISTOR	ERJ3GEYJ 224 V (220 kΩ)
R331	7030003720	S.RESISTOR	ERJ3GEYJ 224 V (220 kΩ)
R332	7030003680	S.RESISTOR	ERJ3GEYJ 104 V (100 kΩ)
R335	7030003720	S.RESISTOR	ERJ3GEYJ 224 V (220 kΩ)
R337	7030003620	S.RESISTOR	ERJ3GEYJ 333 V (33 kΩ)
R338	7030003730	S.RESISTOR	ERJ3GEYJ 274 V (270 kΩ)
R340	7030003560	S.RESISTOR	ERJ3GEYJ 103 V (10 kΩ)
R341	7030003560	S.RESISTOR	ERJ3GEYJ 103 V (10 kΩ)

S.=Surface mount

ManualsPlus.com

[IF UNIT]

REF. NO.	ORDER NO.	DESCRIPTION	
R342	7030003560	S.RESISTOR	ERJ3GEYJ 103 V (10 kΩ)
R343	7030003720	S.RESISTOR	ERJ3GEYJ 224 V (220 kΩ)
R344	7030003630	S.RESISTOR	ERJ3GEYJ 393 V (39 kΩ)
R345	7310002720	S.TRIMMER	RV-148 (RH03A3AS3X0DA) 472
R346	7030003640	S.RESISTOR	ERJ3GEYJ 473 V (47 kΩ)
R347	7030003640	S.RESISTOR	ERJ3GEYJ 473 V (47 kΩ)
R348	7030003600	S.RESISTOR	ERJ3GEYJ 223 V (22 kΩ)
R349	7030003540	S.RESISTOR	ERJ3GEYJ 682 V (6.8 kΩ)
R350	7030003560	S.RESISTOR	ERJ3GEYJ 103 V (10 kΩ)
R351	7030003630	S.RESISTOR	ERJ3GEYJ 393 V (39 kΩ)
R352	7030003800	S.RESISTOR	ERJ3GEYJ 105 V (1 MΩ)
R353	7030003630	S.RESISTOR	ERJ3GEYJ 393 V (39 kΩ)
R354	7030003560	S.RESISTOR	ERJ3GEYJ 103 V (10 kΩ)
R355	7030003560	S.RESISTOR	ERJ3GEYJ 103 V (10 kΩ)
R356	7030003560	S.RESISTOR	ERJ3GEYJ 103 V (10 kΩ)
R357	7030003690	S.RESISTOR	ERJ3GEYJ 124 V (120 kΩ)
R358	7030003570	S.RESISTOR	ERJ3GEYJ 123 V (12 kΩ)
R359	7030003560	S.RESISTOR	ERJ3GEYJ 103 V (10 kΩ)
R360	7030003320	S.RESISTOR	ERJ3GEYJ 101 V (100 Ω)
R361	7030003320	S.RESISTOR	ERJ3GEYJ 101 V (100 Ω)
R362	7310002600	S.TRIMMER	RV-110 (RH03A3AS4X0AA) 473
R363	7030003640	S.RESISTOR	ERJ3GEYJ 473 V (47 kΩ)
R364	7310002740	S.TRIMMER	RV-150 (RH03A3A14X0FC) 103
R365	7030003520	S.RESISTOR	ERJ3GEYJ 472 V (4.7 kΩ)
R366	7030003640	S.RESISTOR	ERJ3GEYJ 473 V (47 kΩ)
R367	7030003840	S.RESISTOR	ERJ3GEYJ 225 V (2.2 MΩ)
R370	7030003410	S.RESISTOR	ERJ3GEYJ 561 V (560 Ω)
R371	7030003440	S.RESISTOR	ERJ3GEYJ 102 V (1 kΩ)
R372	7030003760	S.RESISTOR	ERJ3GEYJ 474 V (470 kΩ)
R373	7030003560	S.RESISTOR	ERJ3GEYJ 103 V (10 kΩ)
R375	7030003320	S.RESISTOR	ERJ3GEYJ 101 V (100 Ω)
R376	7030003700	S.RESISTOR	ERJ3GEYJ 154 V (150 kΩ)
R377	7030003790	S.RESISTOR	ERJ3GEYJ 824 V (820 kΩ)
R378	7030003730	S.RESISTOR	ERJ3GEYJ 274 V (270 kΩ)
R379	7310002600	S.TRIMMER	RV-110 (RH03A3AS4X0AA) 473
R380	7030003560	S.RESISTOR	ERJ3GEYJ 103 V (10 kΩ)
R382	7030003560	S.RESISTOR	ERJ3GEYJ 103 V (10 kΩ)
R383	7030003840	S.RESISTOR	ERJ3GEYJ 225 V (2.2 MΩ)
R384	7030003720	S.RESISTOR	ERJ3GEYJ 224 V (220 kΩ)
R385	7030003560	S.RESISTOR	ERJ3GEYJ 103 V (10 kΩ)
R386	7310002720	S.TRIMMER	RV-148 (RH03A3AS3X0DA) 472
R387	7030003560	S.RESISTOR	ERJ3GEYJ 103 V (10 kΩ)
R392	7030003520	S.RESISTOR	ERJ3GEYJ 472 V (4.7 kΩ)
R393	7030003620	S.RESISTOR	ERJ3GEYJ 333 V (33 kΩ)
R394	7030003580	S.RESISTOR	ERJ3GEYJ 153 V (15 kΩ)
R395	7030003510	S.RESISTOR	ERJ3GEYJ 392 V (3.9 kΩ)
R396	7030003630	S.RESISTOR	ERJ3GEYJ 393 V (39 kΩ)
R397	7030003580	S.RESISTOR	ERJ3GEYJ 153 V (15 kΩ)
R398	7030003520	S.RESISTOR	ERJ3GEYJ 472 V (4.7 kΩ)
R399	7030003750	S.RESISTOR	ERJ3GEYJ 394 V (390 kΩ)
R401	7030003640	S.RESISTOR	ERJ3GEYJ 473 V (47 kΩ)
R402	7030003790	S.RESISTOR	ERJ3GEYJ 824 V (820 kΩ)
R403	7030003560	S.RESISTOR	ERJ3GEYJ 103 V (10 kΩ)
R404	7030003560	S.RESISTOR	ERJ3GEYJ 103 V (10 kΩ)
R405	7030003440	S.RESISTOR	ERJ3GEYJ 102 V (1 kΩ)
R406	7030003600	S.RESISTOR	ERJ3GEYJ 223 V (22 kΩ)
R407	7030003790	S.RESISTOR	ERJ3GEYJ 824 V (820 kΩ)
R408	7030003560	S.RESISTOR	ERJ3GEYJ 103 V (10 kΩ)
R413	7010000090	RESISTOR	ELR25J 4.7 Ω
R414	7010003400	RESISTOR	ELR20J 1 kΩ
R415	7010003380	RESISTOR	ELR20J 680 Ω
R416	7010000090	RESISTOR	ELR25J 4.7 Ω
R417	7010003400	RESISTOR	ELR20J 1 kΩ
R418	7010000090	RESISTOR	ELR25J 4.7 Ω
R419	7010003400	RESISTOR	ELR20J 1 kΩ
R421	7010004690	RESISTOR	R50XJ 47 Ω
R426	7030003320	S.RESISTOR	ERJ3GEYJ 101 V (100 Ω)
R427	7030003560	S.RESISTOR	ERJ3GEYJ 103 V (10 kΩ)
R428	7030003440	S.RESISTOR	ERJ3GEYJ 102 V (1 kΩ)
R430	7030003360	S.RESISTOR	ERJ3GEYJ 221 V (220 Ω)
R431	7030003280	S.RESISTOR	ERJ3GEYJ 470 V (47 Ω)

[IF UNIT]

REF. NO.	ORDER NO.	DESCRIPTION	
R433	7030003560	S.RESISTOR	ERJ3GEYJ 103 V (10 kΩ)
R434	7030003760	S.RESISTOR	ERJ3GEYJ 474 V (470 kΩ)
R435	7030003740	S.RESISTOR	ERJ3GEYJ 334 V (330 kΩ)
R436	7030003440	S.RESISTOR	ERJ3GEYJ 102 V (1 kΩ)
R437	7030003380	S.RESISTOR	ERJ3GEYJ 331 V (330 Ω)
R438	7030003400	S.RESISTOR	ERJ3GEYJ 471 V (470 Ω)
R439	7310002590	S.TRIMMER	RV-109 (RH03A3AJ3X0BA) 222
R440	7030003400	S.RESISTOR	ERJ3GEYJ 471 V (470 Ω)
R441	7030003740	S.RESISTOR	ERJ3GEYJ 334 V (330 kΩ)
R442	7030003600	S.RESISTOR	ERJ3GEYJ 223 V (22 kΩ)
R443	7030003400	S.RESISTOR	ERJ3GEYJ 471 V (470 Ω)
R444	7030003610	S.RESISTOR	ERJ3GEYJ 273 V (27 kΩ)
R445	7030003440	S.RESISTOR	ERJ3GEYJ 102 V (1 kΩ)
R446	7030003320	S.RESISTOR	ERJ3GEYJ 101 V (100 Ω)
R447	7030003710	S.RESISTOR	ERJ3GEYJ 184 V (180 kΩ)
R448	7030003200	S.RESISTOR	ERJ3GEYJ 100 V (10 Ω)
R450	7030003560	S.RESISTOR	ERJ3GEYJ 103 V (10 kΩ)
R451	7030003650	S.RESISTOR	ERJ3GEYJ 563 V (56 kΩ)
R452	7030003410	S.RESISTOR	ERJ3GEYJ 561 V (560 Ω)
R453	7310002820	S.TRIMMER	RV-158 (RH03A3AS5)474
R456	7030003600	S.RESISTOR	ERJ3GEYJ 223 V (22 kΩ)
R457	7310002800	S.TRIMMER	RV-156 (RH03A3AJ5)224
R458	7310002580	S.TRIMMER	RV-108 (RH03A3A15X05A) 104
R459	7030003680	S.RESISTOR	ERJ3GEYJ 104 V (100 kΩ)
R460	7030003760	S.RESISTOR	ERJ3GEYJ 474 V (470 kΩ)
R461	7030003680	S.RESISTOR	ERJ3GEYJ 104 V (100 kΩ)
R462	7030003560	S.RESISTOR	ERJ3GEYJ 103 V (10 kΩ)
R463	7030003560	S.RESISTOR	ERJ3GEYJ 103 V (10 kΩ)
R464	7030003640	S.RESISTOR	ERJ3GEYJ 473 V (47 kΩ)
R465	7030003600	S.RESISTOR	ERJ3GEYJ 223 V (22 kΩ)
R466	7030003430	S.RESISTOR	ERJ3GEYJ 821 V (820 Ω)
R467	7030003520	S.RESISTOR	ERJ3GEYJ 472 V (4.7 kΩ)
R468	7030003440	S.RESISTOR	ERJ3GEYJ 102 V (1 kΩ)
R469	7030003440	S.RESISTOR	ERJ3GEYJ 102 V (1 kΩ)
R470	7030003440	S.RESISTOR	ERJ3GEYJ 102 V (1 kΩ)
R471	7030003440	S.RESISTOR	ERJ3GEYJ 102 V (1 kΩ)
R472	7030003440	S.RESISTOR	ERJ3GEYJ 102 V (1 kΩ)
R473	7030003440	S.RESISTOR	ERJ3GEYJ 102 V (1 kΩ)
R474	7030003470	S.RESISTOR	ERJ3GEYJ 182 V (1.8 kΩ)
R475	7030003470	S.RESISTOR	ERJ3GEYJ 182 V (1.8 kΩ)
R476	7030003480	S.RESISTOR	ERJ3GEYJ 222 V (2.2 kΩ)
R477	7030003440	S.RESISTOR	ERJ3GEYJ 102 V (1 kΩ)
R478	7030003440	S.RESISTOR	ERJ3GEYJ 102 V (1 kΩ)
R488	7030003520	S.RESISTOR	ERJ3GEYJ 472 V (4.7 kΩ)
R489	7030003480	S.RESISTOR	ERJ3GEYJ 222 V (2.2 kΩ)
R490	7030003560	S.RESISTOR	ERJ3GEYJ 103 V (10 kΩ)
R491	7030003440	S.RESISTOR	ERJ3GEYJ 102 V (1 kΩ)
R492	7030003840	S.RESISTOR	ERJ3GEYJ 225 V (2.2 MΩ)
R493	7030003520	S.RESISTOR	ERJ3GEYJ 472 V (4.7 kΩ)
R494	7030003380	S.RESISTOR	ERJ3GEYJ 331 V (330 Ω)
C1	4030010070	S.CERAMIC	C1608 X7S 1C 104K-T-A
C2	4030007150	S.CERAMIC	C1608 CH 1H 151J-T-A
C3	4030006960	S.CERAMIC	C1608 CH 1H 050C-T-A
C5	4030008920	S.CERAMIC	C1608 JB 1C 473K-T-A
C7	4030006880	S.CERAMIC	C1608 JB 1H 472K-T-A
C9	4030010070	S.CERAMIC	C1608 X7S 1C 104K-T-A
C10	4030010070	S.CERAMIC	C1608 X7S 1C 104K-T-A
C12	4030010070	S.CERAMIC	C1608 X7S 1C 104K-T-A
C13	4030006880	S.CERAMIC	C1608 JB 1H 472K-T-A
C15	4030010070	S.CERAMIC	C1608 X7S 1C 104K-T-A
C17	4030010070	S.CERAMIC	C1608 X7S 1C 104K-T-A
C18	4550000400	TANTALUM	DN 1C 2R2M
C19	4030006960	S.CERAMIC	C1608 CH 1H 050C-T-A
C20	4030010070	S.CERAMIC	C1608 X7S 1C 104K-T-A
C21	4030007090	S.CERAMIC	C1608 CH 1H 470J-T-A
C22	4030010070	S.CERAMIC	C1608 X7S 1C 104K-T-A
C23	4030007130	S.CERAMIC	C1608 CH 1H 101J-T-A
C24	4510003790	ELECTROLITIC	16 MV 10 SW
C25	4510003830	ELECTROLITIC	50 MV R47 SW
C26	4510003810	ELECTROLITIC	50 MV R1 SW
C27	4510003820	ELECTROLITIC	50 MV R22 SW
C28	4030006880	S.CERAMIC	C1608 JB 1H 472K-T-A

S.=Surface mount

ManualsPlus.com

[IF UNIT]

REF. NO.	ORDER NO.	DESCRIPTION	
C30	4030010070	S.CERAMIC	C1608 X7S 1C 104K-T-A
C31	4030006860	S.CERAMIC	C1608 JB 1H 102K-T-A
C32	4030006880	S.CERAMIC	C1608 JB 1H 472K-T-A
C34	4030010070	S.CERAMIC	C1608 X7S 1C 104K-T-A
C35	4030006860	S.CERAMIC	C1608 JB 1H 102K-T-A
C36	4030006880	S.CERAMIC	C1608 JB 1H 472K-T-A
C38	4030010070	S.CERAMIC	C1608 X7S 1C 104K-T-A
C39	4030007130	S.CERAMIC	C1608 CH 1H 101J-T-A
C40	4030006830	S.CERAMIC	C1608 SL 1H 331J-T-A
C41	4030006860	S.CERAMIC	C1608 JB 1H 102K-T-A
C42	4510003850	ELECTROLITIC	50 MV 2R2 SW
C43	4510003840	ELECTROLITIC	50 MV 1 SW
C44	4510003800	ELECTROLITIC	25 MV 4R7 SW
C45	4030006870	S.CERAMIC	C1608 JB 1H 222K-T-A
C46	4550002440	TANTALUM	DN 1V R68M
C47	4510003790	ELECTROLITIC	16 MV 10 SW
C48	4030008920	S.CERAMIC	C1608 JB 1C 473K-T-A
C49	4030006880	S.CERAMIC	C1608 JB 1H 472K-T-A
C50	4030006880	S.CERAMIC	C1608 JB 1H 472K-T-A
C51	4030010070	S.CERAMIC	C1608 X7S 1C 104K-T-A
C52	4030010070	S.CERAMIC	C1608 X7S 1C 104K-T-A
C53	4030010070	S.CERAMIC	C1608 X7S 1C 104K-T-A
C54	4030010070	S.CERAMIC	C1608 X7S 1C 104K-T-A
C55	4030010070	S.CERAMIC	C1608 X7S 1C 104K-T-A
C56	4030010070	S.CERAMIC	C1608 X7S 1C 104K-T-A
C57	4030010070	S.CERAMIC	C1608 X7S 1C 104K-T-A
C58	4030010070	S.CERAMIC	C1608 X7S 1C 104K-T-A
C59	4030010070	S.CERAMIC	C1608 X7S 1C 104K-T-A
C60	4030010070	S.CERAMIC	C1608 X7S 1C 104K-T-A
C61	4030010070	S.CERAMIC	C1608 X7S 1C 104K-T-A
C62	4030010070	S.CERAMIC	C1608 X7S 1C 104K-T-A
C63	4030010070	S.CERAMIC	C1608 X7S 1C 104K-T-A
C64	4030010070	S.CERAMIC	C1608 X7S 1C 104K-T-A
C65	4030006880	S.CERAMIC	C1608 JB 1H 472K-T-A
C67	4030010070	S.CERAMIC	C1608 X7S 1C 104K-T-A
C68	4030010070	S.CERAMIC	C1608 X7S 1C 104K-T-A
C69	4030007150	S.CERAMIC	C1608 CH 1H 151J-T-A
C70	4030010070	S.CERAMIC	C1608 X7S 1C 104K-T-A
C71	4030006880	S.CERAMIC	C1608 JB 1H 472K-T-A
C72	4030007130	S.CERAMIC	C1608 CH 1H 101J-T-A
C73	4030010070	S.CERAMIC	C1608 X7S 1C 104K-T-A
C74	4030010070	S.CERAMIC	C1608 X7S 1C 104K-T-A
C75	4030006880	S.CERAMIC	C1608 JB 1H 472K-T-A
C76	4030007170	S.CERAMIC	C1608 CH 1H 221J-T-A
C77	4030010070	S.CERAMIC	C1608 X7S 1C 104K-T-A
C78	4030010070	S.CERAMIC	C1608 X7S 1C 104K-T-A
C79	4030010070	S.CERAMIC	C1608 X7S 1C 104K-T-A
C80	4030009580	S.CERAMIC	C1608 JB 1H 681K-T-A
C81	4030010070	S.CERAMIC	C1608 X7S 1C 104K-T-A
C82	4030010070	S.CERAMIC	C1608 X7S 1C 104K-T-A
C83	4030010070	S.CERAMIC	C1608 X7S 1C 104K-T-A
C84	4030010070	S.CERAMIC	C1608 X7S 1C 104K-T-A
C85	4030010070	S.CERAMIC	C1608 X7S 1C 104K-T-A
C86	4030010070	S.CERAMIC	C1608 X7S 1C 104K-T-A
C88	4030007170	S.CERAMIC	C1608 CH 1H 221J-T-A
C89	4510003810	ELECTROLITIC	50 MV R1 SW
C90	4030010070	S.CERAMIC	C1608 X7S 1C 104K-T-A
C91	4030006880	S.CERAMIC	C1608 JB 1H 472K-T-A
C92	4030010070	S.CERAMIC	C1608 X7S 1C 104K-T-A
C94	4030010070	S.CERAMIC	C1608 X7S 1C 104K-T-A
C95	4030010070	S.CERAMIC	C1608 X7S 1C 104K-T-A
C96	4030007130	S.CERAMIC	C1608 CH 1H 101J-T-A
C97	4030010070	S.CERAMIC	C1608 X7S 1C 104K-T-A
C98	4030010070	S.CERAMIC	C1608 X7S 1C 104K-T-A
C99	4030006880	S.CERAMIC	C1608 JB 1H 472K-T-A
C100	4030010070	S.CERAMIC	C1608 X7S 1C 104K-T-A
C101	4030010070	S.CERAMIC	C1608 X7S 1C 104K-T-A
C102	4030010070	S.CERAMIC	C1608 X7S 1C 104K-T-A
C103	4030010070	S.CERAMIC	C1608 X7S 1C 104K-T-A
C104	4030010070	S.CERAMIC	C1608 X7S 1C 104K-T-A
C105	4030010070	S.CERAMIC	C1608 X7S 1C 104K-T-A
C106	4030010070	S.CERAMIC	C1608 X7S 1C 104K-T-A
C107	4030010070	S.CERAMIC	C1608 X7S 1C 104K-T-A
C108	4030010070	S.CERAMIC	C1608 X7S 1C 104K-T-A
C109	4030010070	S.CERAMIC	C1608 X7S 1C 104K-T-A
C110	4030010070	S.CERAMIC	C1608 X7S 1C 104K-T-A

[IF UNIT]

REF. NO.	ORDER NO.	DESCRIPTION	
C111	4030010070	S.CERAMIC	C1608 X7S 1C 104K-T-A
C113	4030010070	S.CERAMIC	C1608 X7S 1C 104K-T-A
C114	4030010070	S.CERAMIC	C1608 X7S 1C 104K-T-A
C115	4030010070	S.CERAMIC	C1608 X7S 1C 104K-T-A
C116	4030006880	S.CERAMIC	C1608 JB 1H 472K-T-A
C117	4030006880	S.CERAMIC	C1608 JB 1H 472K-T-A
C118	4030010070	S.CERAMIC	C1608 X7S 1C 104K-T-A
C119	4030007130	S.CERAMIC	C1608 CH 1H 101J-T-A
C120	4030010070	S.CERAMIC	C1608 X7S 1C 104K-T-A
C121	4510003790	ELECTROLITIC	16 MV 10 SW
C122	4030006860	S.CERAMIC	C1608 JB 1H 102K-T-A
C124	4030007080	S.CERAMIC	C1608 CH 1H 390J-T-A
C125	4610001270	S.TRIMMER	ECR-JA010 A12W
C126	4030007080	S.CERAMIC	C1608 CH 1H 390J-T-A
C127	4030006880	S.CERAMIC	C1608 JB 1H 472K-T-A
C129	4030010070	S.CERAMIC	C1608 X7S 1C 104K-T-A
C131	4030006880	S.CERAMIC	C1608 JB 1H 472K-T-A
C132	4030006880	S.CERAMIC	C1608 JB 1H 472K-T-A
C134	4030010070	S.CERAMIC	C1608 X7S 1C 104K-T-A
C135	4030007130	S.CERAMIC	C1608 CH 1H 101J-T-A
C136	4030007090	S.CERAMIC	C1608 CH 1H 470J-T-A
C137	4030010070	S.CERAMIC	C1608 X7S 1C 104K-T-A
C138	4030006880	S.CERAMIC	C1608 JB 1H 472K-T-A
C139	4030006830	S.CERAMIC	C1608 SL 1H 331J-T-A
C140	4030006860	S.CERAMIC	C1608 JB 1H 102K-T-A
C141	4030008880	S.CERAMIC	C1608 JB 1C 223K-T-A
C142	4510003790	ELECTROLITIC	16 MV 10 SW
C143	4510003840	ELECTROLITIC	50 MV 1 SW
C144	4030006880	S.CERAMIC	C1608 JB 1H 472K-T-A
C145	4510004130	ELECTROLITIC	16 MV 33 HW
C146	4510003790	ELECTROLITIC	16 MV 10 SW
C147	4510003830	ELECTROLITIC	50 MV R47 SW
C148	4030008920	S.CERAMIC	C1608 JB 1C 473K-T-A
C149	4030010070	S.CERAMIC	C1608 X7S 1C 104K-T-A
C150	4510003790	ELECTROLITIC	16 MV 10 SW
C151	4030007130	S.CERAMIC	C1608 CH 1H 101J-T-A
C152	4030010070	S.CERAMIC	C1608 X7S 1C 104K-T-A
C153	4030010070	S.CERAMIC	C1608 X7S 1C 104K-T-A
C154	4510005000	ELECTROLITIC	16 MV 220 HC
C155	4510003840	ELECTROLITIC	50 MV 1 SW
C156	4030010070	S.CERAMIC	C1608 X7S 1C 104K-T-A
C157	4030007130	S.CERAMIC	C1608 CH 1H 101J-T-A
C158	4030010070	S.CERAMIC	C1608 X7S 1C 104K-T-A
C159	4030007170	S.CERAMIC	C1608 CH 1H 221J-T-A
C160	4030007170	S.CERAMIC	C1608 CH 1H 221J-T-A
C161	4030008920	S.CERAMIC	C1608 JB 1C 473K-T-A
C162	4030008860	S.CERAMIC	C1608 JB 1C 153K-T-A
C163	4030008860	S.CERAMIC	C1608 JB 1C 153K-T-A
C164	4030006870	S.CERAMIC	C1608 JB 1H 222K-T-A
C165	4030006860	S.CERAMIC	C1608 JB 1H 102K-T-A
C166	4510003790	ELECTROLITIC	16 MV 10 SW
C167	4510003840	ELECTROLITIC	50 MV 1 SW
C168	4030010070	S.CERAMIC	C1608 X7S 1C 104K-T-A
C169	4510003790	ELECTROLITIC	16 MV 10 SW
C170	4510003800	ELECTROLITIC	25 MV 4R7 SW
C172	4030010070	S.CERAMIC	C1608 X7S 1C 104K-T-A
C173	4510003840	ELECTROLITIC	50 MV 1 SW
C174	4510004990	ELECTROLITIC	16 MV 100 HC
C175	4030010070	S.CERAMIC	C1608 X7S 1C 104K-T-A
C176	4510004990	ELECTROLITIC	16 MV 100 HC
C177	4030010070	S.CERAMIC	C1608 X7S 1C 104K-T-A
C178	4510003840	ELECTROLITIC	50 MV 1 SW
C179	4510003840	ELECTROLITIC	50 MV 1 SW
C180	4030006880	S.CERAMIC	C1608 JB 1H 472K-T-A
C181	4030010070	S.CERAMIC	C1608 X7S 1C 104K-T-A
C182	4030010070	S.CERAMIC	C1608 X7S 1C 104K-T-A
C183	4510004990	ELECTROLITIC	16 MV 100 HC
C185	4030006880	S.CERAMIC	C1608 JB 1H 472K-T-A
C186	4510003830	ELECTROLITIC	50 MV R47 SW
C187	4510003790	ELECTROLITIC	16 MV 10 SW
C188	4510003790	ELECTROLITIC	16 MV 10 SW
C189	4510003790	ELECTROLITIC	16 MV 10 SW
C190	4030006860	S.CERAMIC	C1608 JB 1H 102K-T-A
C191	4030006870	S.CERAMIC	C1608 JB 1H 222K-T-A
C192	4030007140	S.CERAMIC	C1608 CH 1H 121J-T-A
C193	4510006100	ELECTROLITIC	25 MV 4R7 SWNP

S.=Surface mount

ManualsPlus.com

[IF UNIT]

REF. NO.	ORDER NO.	DESCRIPTION	
C194	4030006880	S.CERAMIC	C1608 JB 1H 472K-T-A
C195	4510003820	ELECTROLITIC	50 MV R22 SW
C196	4030006880	S.CERAMIC	C1608 JB 1H 472K-T-A
C197	4030007090	S.CERAMIC	C1608 CH 1H 470J-T-A
C198	4030006980	S.CERAMIC	C1608 CH 1H 070D-T-A
C199	4030007130	S.CERAMIC	C1608 CH 1H 101J-T-A
C200	4030007130	S.CERAMIC	C1608 CH 1H 101J-T-A
C201	4030010070	S.CERAMIC	C1608 X7S 1C 104K-T-A
C202	4030006880	S.CERAMIC	C1608 JB 1H 472K-T-A
C203	4030006880	S.CERAMIC	C1608 JB 1H 472K-T-A
C204	4030006880	S.CERAMIC	C1608 JB 1H 472K-T-A
C205	4030006880	S.CERAMIC	C1608 JB 1H 472K-T-A
C206	4030010070	S.CERAMIC	C1608 X7S 1C 104K-T-A
C207	4030010070	S.CERAMIC	C1608 X7S 1C 104K-T-A
C208	4030007130	S.CERAMIC	C1608 CH 1H 101J-T-A
C209	4030010070	S.CERAMIC	C1608 X7S 1C 104K-T-A
C210	4510003860	ELECTROLITIC	50 MV 3R3 SW
C211	4030008920	S.CERAMIC	C1608 JB 1C 473K-T-A
C212	4030006900	S.CERAMIC	C1608 JB 1E 103K-T-A
C213	4030008920	S.CERAMIC	C1608 JB 1C 473K-T-A
C214	4030008770	S.CERAMIC	C1608 JB 1H 562K-T-A
C215	4030008920	S.CERAMIC	C1608 JB 1C 473K-T-A
C216	4030008920	S.CERAMIC	C1608 JB 1C 473K-T-A
C217	4030006850	S.CERAMIC	C1608 JB 1H 471K-T-A
C218	4030010070	S.CERAMIC	C1608 X7S 1C 104K-T-A
C219	4510003790	ELECTROLITIC	16 MV 10 SW
C220	4030010070	S.CERAMIC	C1608 X7S 1C 104K-T-A
C221	4510003790	ELECTROLITIC	16 MV 10 SW
C222	4030010070	S.CERAMIC	C1608 X7S 1C 104K-T-A
C223	4510003840	ELECTROLITIC	50 MV 1 SW
C224	4510003790	ELECTROLITIC	16 MV 10 SW
C225	4030006880	S.CERAMIC	C1608 JB 1H 472K-T-A
C226	4510005240	ELECTROLITIC	16 MV 22 SWB
C227	4030008920	S.CERAMIC	C1608 JB 1C 473K-T-A
C228	4030010070	S.CERAMIC	C1608 X7S 1C 104K-T-A
C229	4030010070	S.CERAMIC	C1608 X7S 1C 104K-T-A
C230	4030010070	S.CERAMIC	C1608 X7S 1C 104K-T-A
C231	4030010070	S.CERAMIC	C1608 X7S 1C 104K-T-A
C232	4030006880	S.CERAMIC	C1608 JB 1H 472K-T-A
C233	4030006880	S.CERAMIC	C1608 JB 1H 472K-T-A
C234	4030006880	S.CERAMIC	C1608 JB 1H 472K-T-A
C235	4030006880	S.CERAMIC	C1608 JB 1H 472K-T-A
C236	4030006880	S.CERAMIC	C1608 JB 1H 472K-T-A
C237	4030006880	S.CERAMIC	C1608 JB 1H 472K-T-A
C238	4030006880	S.CERAMIC	C1608 JB 1H 472K-T-A
C239	4030006880	S.CERAMIC	C1608 JB 1H 472K-T-A
C240	4030006880	S.CERAMIC	C1608 JB 1H 472K-T-A
C241	4030006880	S.CERAMIC	C1608 JB 1H 472K-T-A
C242	4030006880	S.CERAMIC	C1608 JB 1H 472K-T-A
C243	4030006880	S.CERAMIC	C1608 JB 1H 472K-T-A
C244	4030010070	S.CERAMIC	C1608 X7S 1C 104K-T-A
C245	4030006900	S.CERAMIC	C1608 JB 1E 103K-T-A
C246	4030006900	S.CERAMIC	C1608 JB 1E 103K-T-A
C247	4030006900	S.CERAMIC	C1608 JB 1E 103K-T-A
C259	4510003840	ELECTROLITIC	50 MV 1 SW
C260	4510003840	ELECTROLITIC	50 MV 1 SW
C261	4030010070	S.CERAMIC	C1608 X7S 1C 104K-T-A
C262	4510003790	ELECTROLITIC	16 MV 10 SW
C263	4030010070	S.CERAMIC	C1608 X7S 1C 104K-T-A
C264	4510003790	ELECTROLITIC	16 MV 10 SW
C265	4030010070	S.CERAMIC	C1608 X7S 1C 104K-T-A
C266	4510003790	ELECTROLITIC	16 MV 10 SW
C267	4030010070	S.CERAMIC	C1608 X7S 1C 104K-T-A
C268	4510003790	ELECTROLITIC	16 MV 10 SW
C270	4030010070	S.CERAMIC	C1608 X7S 1C 104K-T-A
C271	4030010070	S.CERAMIC	C1608 X7S 1C 104K-T-A
C272	4030010070	S.CERAMIC	C1608 X7S 1C 104K-T-A
C274	4030010070	S.CERAMIC	C1608 X7S 1C 104K-T-A
C275	4030010070	S.CERAMIC	C1608 X7S 1C 104K-T-A
C277	4030006880	S.CERAMIC	C1608 JB 1H 472K-T-A
C278	4030006880	S.CERAMIC	C1608 JB 1H 472K-T-A
C279	4030010070	S.CERAMIC	C1608 X7S 1C 104K-T-A
C280	4030006880	S.CERAMIC	C1608 JB 1H 472K-T-A
C281	4030006880	S.CERAMIC	C1608 JB 1H 472K-T-A
C282	4030010070	S.CERAMIC	C1608 X7S 1C 104K-T-A
C283	4030006880	S.CERAMIC	C1608 JB 1H 472K-T-A

[IF UNIT]

REF. NO.	ORDER NO.	DESCRIPTION		
C284	4030006880	S.CERAMIC	C1608 JB 1H 472K-T-A	
C285	4030006880	S.CERAMIC	C1608 JB 1H 472K-T-A	
C286	4030006880	S.CERAMIC	C1608 JB 1H 472K-T-A	
C287	4030007140	S.CERAMIC	C1608 CH 1H 121J-T-A	
C288	4030006860	S.CERAMIC	C1608 JB 1H 102K-T-A	
C289	4030007170	S.CERAMIC	C1608 CH 1H 221J-T-A	
C290	4030010070	S.CERAMIC	C1608 X7S 1C 104K-T-A	
C291	4030010070	S.CERAMIC	C1608 X7S 1C 104K-T-A	
C292	4030008860	S.CERAMIC	C1608 JB 1C 153K-T-A	
C293	4030010070	S.CERAMIC	C1608 X7S 1C 104K-T-A	
C294	4030008880	S.CERAMIC	C1608 JB 1C 223K-T-A	
C295	4030010070	S.CERAMIC	C1608 X7S 1C 104K-T-A	
C296	4030006880	S.CERAMIC	C1608 JB 1H 472K-T-A	
C297	4030006900	S.CERAMIC	C1608 JB 1E 103K-T-A	
C298	4030006850	S.CERAMIC	C1608 JB 1H 471K-T-A	
C299	4030006880	S.CERAMIC	C1608 JB 1H 472K-T-A	
C300	4030006880	S.CERAMIC	C1608 JB 1H 472K-T-A	
C301	4030007150	S.CERAMIC	C1608 CH 1H 151J-T-A	
C302	4510005210	ELECTROLITIC	50 MV 1 SWNP	
C303	4030010070	S.CERAMIC	C1608 X7S 1C 104K-T-A	
C304	4510006100	ELECTROLITIC	25 MV 4R7 SWNP	
C305	4510003790	ELECTROLITIC	16 MV 10 SW	
C306	4510004990	ELECTROLITIC	16 MV 100 HC	
RL1	6330000620	RELAY	SY-12	
S2	2220000520	SWITCH	ESD-11V120	
F1	5210000040	FUSE	FGB 2A	[120 V]
F1	5210000360	FUSE	S506-T-250V-2A	[230 V]
F2	5220000230	HOLDER	S-N5054	
J1	6450000170	CONNECTOR	TCS4480-01-1111	
J2	6450000160	CONNECTOR	TCS4470-01-1111	
J3	6450000410	CONNECTOR	HEC0470-01-830	
J4	6450001130	CONNECTOR	JPJ2042-01-110	
J5	6450001490	CONNECTOR	HLJ7001-01-3010	
J6	6450000140	CONNECTOR	HSJ0807-01-010	
J7	6450000140	CONNECTOR	HSJ0807-01-010	
J8	6510007020	CONNECTOR	TMP-J01X-V6	
J9	6510007020	CONNECTOR	TMP-J01X-V6	
J10	6510007020	CONNECTOR	TMP-J01X-V6	
J11	6510007020	CONNECTOR	TMP-J01X-V6	
J12	6510007020	CONNECTOR	TMP-J01X-V6	
J13	6510007020	CONNECTOR	TMP-J01X-V6	
J14	6510007020	CONNECTOR	TMP-J01X-V6	
J15	6510003390	CONNECTOR	B03B-EH-S	
J16	6450001560	CONNECTOR	PD-72	
J17	6450001560	CONNECTOR	PD-72	
J18	6450001560	CONNECTOR	PD-72	
J19	6450001560	CONNECTOR	PD-72	
J20	6450001560	CONNECTOR	PD-72	
J21	6510017670	CONNECTOR	52045-2045	
J22	6510017650	CONNECTOR	52045-1045	
J23	6510017660	CONNECTOR	52045-1645	
J24	6510003440	CONNECTOR	B08B-EH-S	
J25	6510017660	CONNECTOR	52045-1645	
J26	6510003450	CONNECTOR	B09B-EH-S	
J27	6510003400	CONNECTOR	B04B-EH-S	
J28	6510004970	CONNECTOR	5045-03A	
J29	6510003390	CONNECTOR	B03B-EH-S	
W11	7120000380	JUMPER	JPW 01 R-01	
WS1	8600034230	CABLE	SX1528 P02*J30IF	
EP1	0910043174	PCB	B 4289D	

S.=Surface mount

ManualsPlus.com

[PLL UNIT]

REF. NO.	ORDER NO.	DESCRIPTION	
IC1	1140003641	S.IC	SC-1246
IC2	1130007660	S.IC	LC7153M-TLM
IC3	1130003830	S.IC	TC7S04F (TE85R)
IC4	1140003641	S.IC	SC-1246
IC5	1130007660	S.IC	LC7153M-TLM
IC6	1130003830	S.IC	TC7S04F (TE85R)
IC13	1130007700	S.IC	BU4094BCF-T1
IC14	1130007700	S.IC	BU4094BCF-T1
IC15	1180001070	S.IC	TA7805F(TE16L)
IC16	1180001250	S.IC	TA7808F(TE16L)
IC17	1180001070	S.IC	TA7805F(TE16L)
IC18	1130003830	S.IC	TC7S04F (TE85R)
IC19	1130003830	S.IC	TC7S04F (TE85R)
Q1	1530002600	S.TRANSISTOR	2SC4215-O (TE85R)
Q2	1530002600	S.TRANSISTOR	2SC4215-O (TE85R)
Q4	1560000330	S.FET	2SK210-GR (TE85R)
Q5	1530002690	S.TRANSISTOR	2SC4116-GR (TE85R)
Q7	1530002690	S.TRANSISTOR	2SC4116-GR (TE85R)
Q8	1560000540	S.FET	2SK880-Y (TE85R)
Q9	1530002690	S.TRANSISTOR	2SC4116-GR (TE85R)
Q10	1530002690	S.TRANSISTOR	2SC4116-GR (TE85R)
Q11	1560000330	S.FET	2SK210-GR (TE85R)
Q12	1590000680	S.TRANSISTOR	DTC114EU T107
Q13	1560000330	S.FET	2SK210-GR (TE85R)
Q14	1590000680	S.TRANSISTOR	DTC114EU T107
Q15	1560000330	S.FET	2SK210-GR (TE85R)
Q16	1590000680	S.TRANSISTOR	DTC114EU T107
Q17	1560000330	S.FET	2SK210-GR (TE85R)
Q18	1590000680	S.TRANSISTOR	DTC114EU T107
Q19	1530002600	S.TRANSISTOR	2SC4215-O (TE85R)
Q20	1530002600	S.TRANSISTOR	2SC4215-O (TE85R)
Q21	1530002600	S.TRANSISTOR	2SC4215-O (TE85R)
Q22	1530002600	S.TRANSISTOR	2SC4215-O (TE85R)
Q23	1560000330	S.FET	2SK210-GR (TE85R)
Q24	1530002690	S.TRANSISTOR	2SC4116-GR (TE85R)
Q26	1530002690	S.TRANSISTOR	2SC4116-GR (TE85R)
Q27	1560000540	S.FET	2SK880-Y (TE85R)
Q28	1530002690	S.TRANSISTOR	2SC4116-GR (TE85R)
Q29	1530002690	S.TRANSISTOR	2SC4116-GR (TE85R)
Q30	1560000330	S.FET	2SK210-GR (TE85R)
Q31	1590000680	S.TRANSISTOR	DTC114EU T107
Q32	1560000330	S.FET	2SK210-GR (TE85R)
Q33	1590000680	S.TRANSISTOR	DTC114EU T107
Q34	1560000330	S.FET	2SK210-GR (TE85R)
Q35	1590000680	S.TRANSISTOR	DTC114EU T107
Q36	1560000330	S.FET	2SK210-GR (TE85R)
Q37	1590000680	S.TRANSISTOR	DTC114EU T107
Q38	1530002600	S.TRANSISTOR	2SC4215-O (TE85R)
Q39	1530002600	S.TRANSISTOR	2SC4215-O (TE85R)
Q40	1530002600	S.TRANSISTOR	2SC4215-O (TE85R)
Q41	1530002600	S.TRANSISTOR	2SC4215-O (TE85R)
Q42	1530002600	S.TRANSISTOR	2SC4215-O (TE85R)
Q43	1530002690	S.TRANSISTOR	2SC4116-GR (TE85R)
Q44	1530002690	S.TRANSISTOR	2SC4116-GR (TE85R)
Q46	1530002690	S.TRANSISTOR	2SC4116-GR (TE85R)
Q49	1530002690	S.TRANSISTOR	2SC4116-GR (TE85R)
Q53	1590001330	S.TRANSISTOR	DTA114EU T107
Q54	1590000680	S.TRANSISTOR	DTC114EU T107
Q55	1530002690	S.TRANSISTOR	2SC4116-GR (TE85R)
Q56	1530002690	S.TRANSISTOR	2SC4116-GR (TE85R)
Q57	1530002690	S.TRANSISTOR	2SC4116-GR (TE85R)
Q58	1530002560	S.TRANSISTOR	2SC4403-3-TR
Q59	1530002690	S.TRANSISTOR	2SC4116-GR (TE85R)
Q60	1530002600	S.TRANSISTOR	2SC4215-O (TE85R)
D1	1790000540	S.VARICAP	MA338(TX)
D2	1790000540	S.VARICAP	MA338(TX)
D3	1790000490	S.DIODE	HSM88AS-TR
D4	1790000540	S.VARICAP	MA338(TX)
D5	1790000620	S.DIODE	MA77(TW)
D6	1790000540	S.VARICAP	MA338(TX)
D7	1790000620	S.DIODE	MA77(TW)
D8	1790000540	S.VARICAP	MA338(TX)

[PLL UNIT]

REF. NO.	ORDER NO.	DESCRIPTION	
D9	1790000620	S.DIODE	MA77(TW)
D10	1790000540	S.VARICAP	MA338(TX)
D11	1790000620	S.DIODE	MA77(TW)
D12	1790000540	S.VARICAP	MA338(TX)
D13	1790000490	S.DIODE	HSM88AS-TR
D14	1790000540	S.VARICAP	MA338(TX)
D15	1790000620	S.DIODE	MA77(TW)
D16	1790000540	S.VARICAP	MA338(TX)
D17	1790000620	S.DIODE	MA77(TW)
D18	1790000540	S.VARICAP	MA338(TX)
D19	1790000620	S.DIODE	MA77(TW)
D20	1790000540	S.VARICAP	MA338(TX)
D21	1790000620	S.DIODE	MA77(TW)
D22	1160000050	S.DIODE	DAP202U T107
D23	1160000060	S.DIODE	DAN202U T107
D24	1790000490	S.DIODE	HSM88AS-TR
D25	1790000490	S.DIODE	HSM88AS-TR
D26	1790000490	S.DIODE	HSM88AS-TR
D27	1790000490	S.DIODE	HSM88AS-TR
D28	1160000060	S.DIODE	DAN202U T107
D29	1790000490	S.DIODE	HSM88AS-TR
D30	1790000490	S.DIODE	HSM88AS-TR
D31	1160000060	S.DIODE	DAN202U T107
FI1	2020000670	CERAMIC	SFE10.7MS2-A
FI2	2020000670	CERAMIC	SFE10.7MS2-A
X1	6050005710	XTAL	CR-275
L1	6200001830	S.COIL	NL 322522T-100J
L2	6170000230	COIL	LW-25
L3	2040000490	COIL	EXC-ELDR25C
L4	6150004370	COIL	LS-472C (C-15045)
L6	6150004250	COIL	LS-471A (C-14922)
L7	6150004250	COIL	LS-471A (C-14922)
L9	6180001220	COIL	LAL 04NA 100K
L13	6200003260	S.COIL	NL 322522T-101J
L14	6200003260	S.COIL	NL 322522T-101J
L15	6130001850	COIL	LB-185
L16	6200001830	S.COIL	NL 322522T-100J
L17	6200003260	S.COIL	NL 322522T-101J
L18	6200003100	S.COIL	NL 322522T-3R9J-3
L19	6200003260	S.COIL	NL 322522T-101J
L20	6140002220	COIL	LR-270 (TR6X3X2 3A9)
L21	6190000950	COIL	C-13975-6.5T
L22	6170000230	COIL	LW-25
L23	6140002220	COIL	LR-270 (TR6X3X2 3A9)
L24	6190000950	COIL	C-13975-6.5T
L25	6170000230	COIL	LW-25
L26	6140002220	COIL	LR-270 (TR6X3X2 3A9)
L27	6190000950	COIL	C-13975-6.5T
L28	6170000230	COIL	LW-25
L29	6140002220	COIL	LR-270 (TR6X3X2 3A9)
L30	6190000950	COIL	C-13975-6.5T
L31	6170000230	COIL	LW-25
L32	6200003050	S.COIL	NL 322522T-R82J-3
L33	6200003430	S.COIL	NL 322522T-R10J
L34	6200003430	S.COIL	NL 322522T-R10J
L35	6200003430	S.COIL	NL 322522T-R10J
L36	6200003260	S.COIL	NL 322522T-101J
L37	6180001220	COIL	LAL 04NA 100K
L41	6200003260	S.COIL	NL 322522T-101J
L42	6130001850	COIL	LB-185
L43	6200003260	S.COIL	NL 322522T-101J
L44	6200001830	S.COIL	NL 322522T-100J
L45	6200003260	S.COIL	NL 322522T-101J
L46	6200003100	S.COIL	NL 322522T-3R9J-3
L47	6200003260	S.COIL	NL 322522T-101J
L48	6140002220	COIL	LR-270 (TR6X3X2 3A9)
L49	6190000950	COIL	C-13975-6.5T
L50	6170000230	COIL	LW-25
L51	6140002220	COIL	LR-270 (TR6X3X2 3A9)
L52	6190000950	COIL	C-13975-6.5T

S.=Surface mount

ManualsPlus.com

[PLL UNIT]

REF. NO.	ORDER NO.	DESCRIPTION	
L53	6170000230	COIL	LW-25
L54	6140002220	COIL	LR-270 (TR6X3X2 3A9)
L55	6190000950	COIL	C-13975-6.5T
L56	6170000230	COIL	LW-25
L57	6140002220	COIL	LR-270 (TR6X3X2 3A9)
L58	6190000950	COIL	C-13975-6.5T
L59	6170000230	COIL	LW-25
L60	6200003050	S.COIL	NL 322522T-R82J-3
L61	6200003430	S.COIL	NL 322522T-R10J
L62	6200003430	S.COIL	NL 322522T-R10J
L63	6200003430	S.COIL	NL 322522T-R10J
L64	6200003260	S.COIL	NL 322522T-101J
L66	6200003140	S.COIL	NL 322522T-150J
L67	6200001710	S.COIL	NL 322522T-220J
L68	6200001710	S.COIL	NL 322522T-220J
L70	6200003140	S.COIL	NL 322522T-150J
L71	6200003150	S.COIL	NL 322522T-180J
L72	6200003150	S.COIL	NL 322522T-180J
L77	6200003260	S.COIL	NL 322522T-101J
L78	6200003260	S.COIL	NL 322522T-101J
L80	6200003140	S.COIL	NL 322522T-150J
L81	6200003150	S.COIL	NL 322522T-180J
L82	6200003150	S.COIL	NL 322522T-180J
L83	6200003050	S.COIL	NL 322522T-R82J-3
L84	6200003050	S.COIL	NL 322522T-R82J-3
L85	6200003040	S.COIL	NL 322522T-R68J-3
L87	6200003140	S.COIL	NL 322522T-150J
L88	6200003150	S.COIL	NL 322522T-180J
L89	6200003150	S.COIL	NL 322522T-180J
L90	6200003260	S.COIL	NL 322522T-101J
L92	6200003150	S.COIL	NL 322522T-180J
L93	6200001710	S.COIL	NL 322522T-220J
L94	6200001710	S.COIL	NL 322522T-220J
L95	6200001720	S.COIL	NL 322522T-1R0J
L96	6200003050	S.COIL	NL 322522T-R82J-3
L97	6200003050	S.COIL	NL 322522T-R82J-3
L101	6200003260	S.COIL	NL 322522T-101J
L104	6200003260	S.COIL	NL 322522T-101J
L105	6200003260	S.COIL	NL 322522T-101J
L106	2040000490	COIL	EXC-ELDR25C
L109	6200001710	S.COIL	NL 322522T-220J
L110	6200003260	S.COIL	NL 322522T-101J
L111	6200003260	S.COIL	NL 322522T-101J
L112	6200002980	S.COIL	NL 322522T-R56J-3
L113	6200003150	S.COIL	NL 322522T-180J
L114	6200002980	S.COIL	NL 322522T-R56J-3
L115	6200001850	S.COIL	NL 322522T-5R6J
L116	6200002980	S.COIL	NL 322522T-R56J-3
L117	6200003420	S.COIL	NL 322522T-R15J-3
L118	6200003420	S.COIL	NL 322522T-R15J-3
L119	2040000490	COIL	EXC-ELDR25C
R1	7030003360	S.RESISTOR	ERJ3GEYJ 221 V (220 Ω)
R2	7030003500	S.RESISTOR	ERJ3GEYJ 332 V (3.3 kΩ)
R3	7030003610	S.RESISTOR	ERJ3GEYJ 273 V (27 kΩ)
R4	7030003550	S.RESISTOR	ERJ3GEYJ 822 V (8.2 kΩ)
R5	7030003580	S.RESISTOR	ERJ3GEYJ 153 V (15 kΩ)
R6	7030003520	S.RESISTOR	ERJ3GEYJ 472 V (4.7 kΩ)
R7	7030003400	S.RESISTOR	ERJ3GEYJ 471 V (470 Ω)
R11	7030003360	S.RESISTOR	ERJ3GEYJ 221 V (220 Ω)
R12	7030003320	S.RESISTOR	ERJ3GEYJ 101 V (100 Ω)
R13	7030003660	S.RESISTOR	ERJ3GEYJ 683 V (68 kΩ)
R14	7030003600	S.RESISTOR	ERJ3GEYJ 223 V (22 kΩ)
R15	7030003360	S.RESISTOR	ERJ3GEYJ 221 V (220 Ω)
R19	7030005400	S.RESISTOR	RR0816P-202-D (2 kΩ)
R20	7030005400	S.RESISTOR	RR0816P-202-D (2 kΩ)
R21	7030005390	S.RESISTOR	RR0816P-102-D (1 kΩ)
R22	7030005400	S.RESISTOR	RR0816P-202-D (2 kΩ)
R23	7030005390	S.RESISTOR	RR0816P-102-D (1 kΩ)
R24	7030005400	S.RESISTOR	RR0816P-202-D (2 kΩ)
R25	7030005390	S.RESISTOR	RR0816P-102-D (1 kΩ)
R26	7030005400	S.RESISTOR	RR0816P-202-D (2 kΩ)
R27	7030005390	S.RESISTOR	RR0816P-102-D (1 kΩ)
R28	7030005400	S.RESISTOR	RR0816P-202-D (2 kΩ)
R29	7030005390	S.RESISTOR	RR0816P-102-D (1 kΩ)

[PLL UNIT]

REF. NO.	ORDER NO.	DESCRIPTION	
R30	7030005400	S.RESISTOR	RR0816P-202-D (2 kΩ)
R31	7030005390	S.RESISTOR	RR0816P-102-D (1 kΩ)
R32	7030005400	S.RESISTOR	RR0816P-202-D (2 kΩ)
R33	7030005390	S.RESISTOR	RR0816P-102-D (1 kΩ)
R34	7030005400	S.RESISTOR	RR0816P-202-D (2 kΩ)
R35	7030005390	S.RESISTOR	RR0816P-102-D (1 kΩ)
R36	7030005400	S.RESISTOR	RR0816P-202-D (2 kΩ)
R37	7030005390	S.RESISTOR	RR0816P-102-D (1 kΩ)
R38	7030005400	S.RESISTOR	RR0816P-202-D (2 kΩ)
R39	7030005390	S.RESISTOR	RR0816P-102-D (1 kΩ)
R40	7030005400	S.RESISTOR	RR0816P-202-D (2 kΩ)
R41	7030005390	S.RESISTOR	RR0816P-102-D (1 kΩ)
R42	7030005400	S.RESISTOR	RR0816P-202-D (2 kΩ)
R44	7030003800	S.RESISTOR	ERJ3GEYJ 105 V (1 MΩ)
R45	7030003320	S.RESISTOR	ERJ3GEYJ 101 V (100 Ω)
R46	7010004180	RESISTOR	R20J 820 Ω
R47	7030003340	S.RESISTOR	ERJ3GEYJ 151 V (150 Ω)
R48	7030003680	S.RESISTOR	ERJ3GEYJ 104 V (100 kΩ)
R49	7030003680	S.RESISTOR	ERJ3GEYJ 104 V (100 kΩ)
R50	7030003350	S.RESISTOR	ERJ3GEYJ 181 V (180 Ω)
R51	7030003340	S.RESISTOR	ERJ3GEYJ 151 V (150 Ω)
R52	7030003320	S.RESISTOR	ERJ3GEYJ 101 V (100 Ω)
R53	7030003690	S.RESISTOR	ERJ3GEYJ 124 V (120 kΩ)
R54	7030003430	S.RESISTOR	ERJ3GEYJ 821 V (820 Ω)
R56	7030003430	S.RESISTOR	ERJ3GEYJ 821 V (820 Ω)
R60	7030003570	S.RESISTOR	ERJ3GEYJ 123 V (12 kΩ)
R61	7030003400	S.RESISTOR	ERJ3GEYJ 471 V (470 Ω)
R62	7030003400	S.RESISTOR	ERJ3GEYJ 471 V (470 Ω)
R63	7030003640	S.RESISTOR	ERJ3GEYJ 473 V (47 kΩ)
R64	7030003640	S.RESISTOR	ERJ3GEYJ 473 V (47 kΩ)
R65	7030003430	S.RESISTOR	ERJ3GEYJ 821 V (820 Ω)
R66	7030003430	S.RESISTOR	ERJ3GEYJ 821 V (820 Ω)
R67	7030003380	S.RESISTOR	ERJ3GEYJ 331 V (330 Ω)
R68	7030003380	S.RESISTOR	ERJ3GEYJ 331 V (330 Ω)
R69	7010003280	RESISTOR	ELR20J 100 Ω
R70	7010003400	RESISTOR	ELR20J 1 kΩ
R71	7010003340	RESISTOR	ELR20J 330 Ω
R72	7010003400	RESISTOR	ELR20J 1 kΩ
R73	7010004270	RESISTOR	R20J 4.7 kΩ
R74	7030003320	S.RESISTOR	ERJ3GEYJ 101 V (100 Ω)
R75	7030003680	S.RESISTOR	ERJ3GEYJ 104 V (100 kΩ)
R76	7030003680	S.RESISTOR	ERJ3GEYJ 104 V (100 kΩ)
R77	7030003340	S.RESISTOR	ERJ3GEYJ 151 V (150 Ω)
R78	7030003500	S.RESISTOR	ERJ3GEYJ 332 V (3.3 kΩ)
R80	7030003680	S.RESISTOR	ERJ3GEYJ 104 V (100 kΩ)
R81	7030003680	S.RESISTOR	ERJ3GEYJ 104 V (100 kΩ)
R82	7030003340	S.RESISTOR	ERJ3GEYJ 151 V (150 Ω)
R83	7030003500	S.RESISTOR	ERJ3GEYJ 332 V (3.3 kΩ)
R85	7030003680	S.RESISTOR	ERJ3GEYJ 104 V (100 kΩ)
R86	7030003680	S.RESISTOR	ERJ3GEYJ 104 V (100 kΩ)
R87	7030003340	S.RESISTOR	ERJ3GEYJ 151 V (150 Ω)
R88	7030003500	S.RESISTOR	ERJ3GEYJ 332 V (3.3 kΩ)
R90	7030003680	S.RESISTOR	ERJ3GEYJ 104 V (100 kΩ)
R91	7030003680	S.RESISTOR	ERJ3GEYJ 104 V (100 kΩ)
R92	7030003340	S.RESISTOR	ERJ3GEYJ 151 V (150 Ω)
R93	7030003500	S.RESISTOR	ERJ3GEYJ 332 V (3.3 kΩ)
R95	7030003260	S.RESISTOR	ERJ3GEYJ 330 V (33 Ω)
R96	7030003520	S.RESISTOR	ERJ3GEYJ 472 V (4.7 kΩ)
R97	7030003330	S.RESISTOR	ERJ3GEYJ 121 V (120 Ω)
R98	7030003640	S.RESISTOR	ERJ3GEYJ 473 V (47 kΩ)
R99	7030003440	S.RESISTOR	ERJ3GEYJ 102 V (1 kΩ)
R100	7030003200	S.RESISTOR	ERJ3GEYJ 100 V (10 Ω)
R101	7030003500	S.RESISTOR	ERJ3GEYJ 332 V (3.3 kΩ)
R102	7030003480	S.RESISTOR	ERJ3GEYJ 222 V (2.2 kΩ)
R103	7030003370	S.RESISTOR	ERJ3GEYJ 271 V (270 Ω)
R104	7030003330	S.RESISTOR	ERJ3GEYJ 121 V (120 Ω)
R105	7030003520	S.RESISTOR	ERJ3GEYJ 472 V (4.7 kΩ)
R106	7030003520	S.RESISTOR	ERJ3GEYJ 472 V (4.7 kΩ)
R107	7030003410	S.RESISTOR	ERJ3GEYJ 561 V (560 Ω)
R108	7030003200	S.RESISTOR	ERJ3GEYJ 100 V (10 Ω)
R109	7030003360	S.RESISTOR	ERJ3GEYJ 221 V (220 Ω)
R110	7030003520	S.RESISTOR	ERJ3GEYJ 472 V (4.7 kΩ)
R111	7030003360	S.RESISTOR	ERJ3GEYJ 221 V (220 Ω)
R112	7030003280	S.RESISTOR	ERJ3GEYJ 470 V (47 Ω)
R114	7030005400	S.RESISTOR	RR0816P-202-D (2 kΩ)
R115	7030005400	S.RESISTOR	RR0816P-202-D (2 kΩ)

S.=Surface mount

ManualsPlus.com

[PLL UNIT]

REF. NO.	ORDER NO.	DESCRIPTION	
R116	7030005390	S.RESISTOR	RR0816P-102-D (1 kΩ)
R117	7030005400	S.RESISTOR	RR0816P-202-D (2 kΩ)
R118	7030005390	S.RESISTOR	RR0816P-102-D (1 kΩ)
R119	7030005400	S.RESISTOR	RR0816P-202-D (2 kΩ)
R120	7030005390	S.RESISTOR	RR0816P-102-D (1 kΩ)
R121	7030005400	S.RESISTOR	RR0816P-202-D (2 kΩ)
R122	7030005390	S.RESISTOR	RR0816P-102-D (1 kΩ)
R123	7030005400	S.RESISTOR	RR0816P-202-D (2 kΩ)
R124	7030005390	S.RESISTOR	RR0816P-102-D (1 kΩ)
R125	7030005400	S.RESISTOR	RR0816P-202-D (2 kΩ)
R126	7030005390	S.RESISTOR	RR0816P-102-D (1 kΩ)
R127	7030005400	S.RESISTOR	RR0816P-202-D (2 kΩ)
R128	7030005390	S.RESISTOR	RR0816P-102-D (1 kΩ)
R129	7030005400	S.RESISTOR	RR0816P-202-D (2 kΩ)
R130	7030005390	S.RESISTOR	RR0816P-102-D (1 kΩ)
R131	7030005400	S.RESISTOR	RR0816P-202-D (2 kΩ)
R132	7030005390	S.RESISTOR	RR0816P-102-D (1 kΩ)
R133	7030005400	S.RESISTOR	RR0816P-202-D (2 kΩ)
R134	7030005390	S.RESISTOR	RR0816P-102-D (1 kΩ)
R135	7030005400	S.RESISTOR	RR0816P-202-D (2 kΩ)
R136	7030005390	S.RESISTOR	RR0816P-102-D (1 kΩ)
R137	7030005400	S.RESISTOR	RR0816P-202-D (2 kΩ)
R139	7030003800	S.RESISTOR	ERJ3GEYJ 105 V (1 MΩ)
R140	7030003320	S.RESISTOR	ERJ3GEYJ 101 V (100 Ω)
R141	7010004180	RESISTOR	R20J 820 Ω
R142	7030003340	S.RESISTOR	ERJ3GEYJ 151 V (150 Ω)
R143	7030003350	S.RESISTOR	ERJ3GEYJ 181 V (180 Ω)
R144	7030003680	S.RESISTOR	ERJ3GEYJ 104 V (100 kΩ)
R145	7030003680	S.RESISTOR	ERJ3GEYJ 104 V (100 kΩ)
R146	7030003340	S.RESISTOR	ERJ3GEYJ 151 V (150 Ω)
R147	7030003320	S.RESISTOR	ERJ3GEYJ 101 V (100 Ω)
R148	7030003690	S.RESISTOR	ERJ3GEYJ 124 V (120 kΩ)
R149	7030003430	S.RESISTOR	ERJ3GEYJ 821 V (820 Ω)
R151	7030003430	S.RESISTOR	ERJ3GEYJ 821 V (820 Ω)
R154	7030003440	S.RESISTOR	ERJ3GEYJ 102 V (1 kΩ)
R155	7030003400	S.RESISTOR	ERJ3GEYJ 471 V (470 Ω)
R156	7030003570	S.RESISTOR	ERJ3GEYJ 123 V (12 kΩ)
R157	7030003400	S.RESISTOR	ERJ3GEYJ 471 V (470 Ω)
R158	7030003640	S.RESISTOR	ERJ3GEYJ 473 V (47 kΩ)
R159	7030003640	S.RESISTOR	ERJ3GEYJ 473 V (47 kΩ)
R160	7030003430	S.RESISTOR	ERJ3GEYJ 821 V (820 Ω)
R161	7030003430	S.RESISTOR	ERJ3GEYJ 821 V (820 Ω)
R162	7030003380	S.RESISTOR	ERJ3GEYJ 331 V (330 Ω)
R163	7030003380	S.RESISTOR	ERJ3GEYJ 331 V (330 Ω)
R164	7010003280	RESISTOR	ELR20J 100 Ω
R165	7010003400	RESISTOR	ELR20J 1 kΩ
R166	7010003340	RESISTOR	ELR20J 330 Ω
R167	7010003400	RESISTOR	ELR20J 1 kΩ
R168	7010004270	RESISTOR	R20J 4.7 kΩ
R169	7030003320	S.RESISTOR	ERJ3GEYJ 101 V (100 Ω)
R170	7030003680	S.RESISTOR	ERJ3GEYJ 104 V (100 kΩ)
R171	7030003680	S.RESISTOR	ERJ3GEYJ 104 V (100 kΩ)
R172	7030003340	S.RESISTOR	ERJ3GEYJ 151 V (150 Ω)
R173	7030003500	S.RESISTOR	ERJ3GEYJ 332 V (3.3 kΩ)
R175	7030003680	S.RESISTOR	ERJ3GEYJ 104 V (100 kΩ)
R176	7030003680	S.RESISTOR	ERJ3GEYJ 104 V (100 kΩ)
R177	7030003340	S.RESISTOR	ERJ3GEYJ 151 V (150 Ω)
R178	7030003500	S.RESISTOR	ERJ3GEYJ 332 V (3.3 kΩ)
R180	7030003680	S.RESISTOR	ERJ3GEYJ 104 V (100 kΩ)
R181	7030003680	S.RESISTOR	ERJ3GEYJ 104 V (100 kΩ)
R182	7030003340	S.RESISTOR	ERJ3GEYJ 151 V (150 Ω)
R183	7030003500	S.RESISTOR	ERJ3GEYJ 332 V (3.3 kΩ)
R185	7030003680	S.RESISTOR	ERJ3GEYJ 104 V (100 kΩ)
R186	7030003680	S.RESISTOR	ERJ3GEYJ 104 V (100 kΩ)
R187	7030003340	S.RESISTOR	ERJ3GEYJ 151 V (150 Ω)
R188	7030003500	S.RESISTOR	ERJ3GEYJ 332 V (3.3 kΩ)
R190	7030003260	S.RESISTOR	ERJ3GEYJ 330 V (33 Ω)
R191	7030003520	S.RESISTOR	ERJ3GEYJ 472 V (4.7 kΩ)
R192	7030003330	S.RESISTOR	ERJ3GEYJ 121 V (120 Ω)
R193	7030003640	S.RESISTOR	ERJ3GEYJ 473 V (47 kΩ)
R194	7030003440	S.RESISTOR	ERJ3GEYJ 102 V (1 kΩ)
R195	7030003200	S.RESISTOR	ERJ3GEYJ 100 V (10 Ω)
R196	7030003500	S.RESISTOR	ERJ3GEYJ 332 V (3.3 kΩ)
R197	7030003480	S.RESISTOR	ERJ3GEYJ 222 V (2.2 kΩ)
R198	7030003370	S.RESISTOR	ERJ3GEYJ 271 V (270 Ω)
R199	7030003330	S.RESISTOR	ERJ3GEYJ 121 V (120 Ω)

[PLL UNIT]

REF. NO.	ORDER NO.	DESCRIPTION	
R200	7030003520	S.RESISTOR	ERJ3GEYJ 472 V (4.7 kΩ)
R201	7030003520	S.RESISTOR	ERJ3GEYJ 472 V (4.7 kΩ)
R202	7030003410	S.RESISTOR	ERJ3GEYJ 561 V (560 Ω)
R203	7030003230	S.RESISTOR	ERJ3GEYJ 180 V (18 Ω)
R226	7030003330	S.RESISTOR	ERJ3GEYJ 121 V (120 Ω)
R227	7030003470	S.RESISTOR	ERJ3GEYJ 182 V (1.8 kΩ)
R228	7030003490	S.RESISTOR	ERJ3GEYJ 272 V (2.7 kΩ)
R229	7030003350	S.RESISTOR	ERJ3GEYJ 181 V (180 Ω)
R251	7030003330	S.RESISTOR	ERJ3GEYJ 121 V (120 Ω)
R252	7030003470	S.RESISTOR	ERJ3GEYJ 182 V (1.8 kΩ)
R253	7030003350	S.RESISTOR	ERJ3GEYJ 181 V (180 Ω)
R264	7030003560	S.RESISTOR	ERJ3GEYJ 103 V (10 kΩ)
R268	7030003320	S.RESISTOR	ERJ3GEYJ 101 V (100 Ω)
R269	7030003470	S.RESISTOR	ERJ3GEYJ 182 V (1.8 kΩ)
R270	7030003350	S.RESISTOR	ERJ3GEYJ 181 V (180 Ω)
R271	7030003260	S.RESISTOR	ERJ3GEYJ 330 V (33 Ω)
R272	7030003260	S.RESISTOR	ERJ3GEYJ 330 V (33 Ω)
R300	7030003400	S.RESISTOR	ERJ3GEYJ 471 V (470 Ω)
R301	7030003450	S.RESISTOR	ERJ3GEYJ 122 V (1.2 kΩ)
R302	7030003350	S.RESISTOR	ERJ3GEYJ 181 V (180 Ω)
R303	7030003280	S.RESISTOR	ERJ3GEYJ 470 V (47 Ω)
R304	7030003340	S.RESISTOR	ERJ3GEYJ 151 V (150 Ω)
R314	7030003320	S.RESISTOR	ERJ3GEYJ 101 V (100 Ω)
R316	7030003440	S.RESISTOR	ERJ3GEYJ 102 V (1 kΩ)
R318	7030003640	S.RESISTOR	ERJ3GEYJ 473 V (47 kΩ)
R319	7030003440	S.RESISTOR	ERJ3GEYJ 102 V (1 kΩ)
R320	7030003440	S.RESISTOR	ERJ3GEYJ 102 V (1 kΩ)
R321	7030003440	S.RESISTOR	ERJ3GEYJ 102 V (1 kΩ)
R322	7030003440	S.RESISTOR	ERJ3GEYJ 102 V (1 kΩ)
R323	7030003440	S.RESISTOR	ERJ3GEYJ 102 V (1 kΩ)
R324	7030003440	S.RESISTOR	ERJ3GEYJ 102 V (1 kΩ)
R325	7030003440	S.RESISTOR	ERJ3GEYJ 102 V (1 kΩ)
R326	7030003440	S.RESISTOR	ERJ3GEYJ 102 V (1 kΩ)
R327	7030003440	S.RESISTOR	ERJ3GEYJ 102 V (1 kΩ)
R328	7030003440	S.RESISTOR	ERJ3GEYJ 102 V (1 kΩ)
R329	7030003440	S.RESISTOR	ERJ3GEYJ 102 V (1 kΩ)
R330	7030003440	S.RESISTOR	ERJ3GEYJ 102 V (1 kΩ)
R331	7030003640	S.RESISTOR	ERJ3GEYJ 473 V (47 kΩ)
R332	7030003640	S.RESISTOR	ERJ3GEYJ 473 V (47 kΩ)
R333	7030003640	S.RESISTOR	ERJ3GEYJ 473 V (47 kΩ)
R334	7030003640	S.RESISTOR	ERJ3GEYJ 473 V (47 kΩ)
R335	7030003640	S.RESISTOR	ERJ3GEYJ 473 V (47 kΩ)
R336	7030003640	S.RESISTOR	ERJ3GEYJ 473 V (47 kΩ)
R337	7030003640	S.RESISTOR	ERJ3GEYJ 473 V (47 kΩ)
R338	7030003640	S.RESISTOR	ERJ3GEYJ 473 V (47 kΩ)
R339	7030003640	S.RESISTOR	ERJ3GEYJ 473 V (47 kΩ)
R340	7030003640	S.RESISTOR	ERJ3GEYJ 473 V (47 kΩ)
R341	7030003640	S.RESISTOR	ERJ3GEYJ 473 V (47 kΩ)
R342	7030003640	S.RESISTOR	ERJ3GEYJ 473 V (47 kΩ)
R343	7030003360	S.RESISTOR	ERJ3GEYJ 221 V (220 Ω)
R344	7030003520	S.RESISTOR	ERJ3GEYJ 472 V (4.7 kΩ)
R345	7030003360	S.RESISTOR	ERJ3GEYJ 221 V (220 Ω)
R346	7070000440	RESISTOR	CRH200 R-02J 15 Ω (150)
R347	7030003230	S.RESISTOR	ERJ3GEYJ 180 V (18 Ω)
R348	7030003200	S.RESISTOR	ERJ3GEYJ 100 V (10 Ω)
R349	7030003280	S.RESISTOR	ERJ3GEYJ 470 V (47 Ω)
R360	7310003820	TRIMMER	EVN-D2AA03 B14
R361	7030003480	S.RESISTOR	ERJ3GEYJ 222 V (2.2 kΩ)
R363	7030003350	S.RESISTOR	ERJ3GEYJ 181 V (180 Ω)
R364	7030003460	S.RESISTOR	ERJ3GEYJ 152 V (1.5 kΩ)
R365	7030003490	S.RESISTOR	ERJ3GEYJ 272 V (2.7 kΩ)
R368	7030003400	S.RESISTOR	ERJ3GEYJ 471 V (470 Ω)
R369	7030003430	S.RESISTOR	ERJ3GEYJ 821 V (820 Ω)
R370	7010003430	RESISTOR	ELR20J 1.8 kΩ
R371	7030003350	S.RESISTOR	ERJ3GEYJ 181 V (180 Ω)
R372	7030003460	S.RESISTOR	ERJ3GEYJ 152 V (1.5 kΩ)
R373	7030003490	S.RESISTOR	ERJ3GEYJ 272 V (2.7 kΩ)
R375	7030003400	S.RESISTOR	ERJ3GEYJ 471 V (470 Ω)
R376	7030003430	S.RESISTOR	ERJ3GEYJ 821 V (820 Ω)
R377	7010003430	RESISTOR	ELR20J 1.8 kΩ
R379	7030003640	S.RESISTOR	ERJ3GEYJ 473 V (47 kΩ)
R380	7030003440	S.RESISTOR	ERJ3GEYJ 102 V (1 kΩ)
R381	7030003440	S.RESISTOR	ERJ3GEYJ 102 V (1 kΩ)
R382	7030003440	S.RESISTOR	ERJ3GEYJ 102 V (1 kΩ)
R383	7030003440	S.RESISTOR	ERJ3GEYJ 102 V (1 kΩ)
R384	7030003640	S.RESISTOR	ERJ3GEYJ 473 V (47 kΩ)

S.=Surface mount

ManualsPlus.com

[PLL UNIT]

REF. NO.	ORDER NO.	DESCRIPTION	
R385	7030003640	S.RESISTOR	ERJ3GEYJ 473 V (47 kΩ)
R386	7030003640	S.RESISTOR	ERJ3GEYJ 473 V (47 kΩ)
R387	7030003640	S.RESISTOR	ERJ3GEYJ 473 V (47 kΩ)
R388	7030003640	S.RESISTOR	ERJ3GEYJ 473 V (47 kΩ)
R389	7030003640	S.RESISTOR	ERJ3GEYJ 473 V (47 kΩ)
R390	7030003380	S.RESISTOR	ERJ3GEYJ 331 V (330 Ω)
R391	7030003380	S.RESISTOR	ERJ3GEYJ 331 V (330 Ω)
R392	7030003440	S.RESISTOR	ERJ3GEYJ 102 V (1 kΩ)
R393	7030003370	S.RESISTOR	ERJ3GEYJ 271 V (270 Ω)
R395	7030003640	S.RESISTOR	ERJ3GEYJ 473 V (47 kΩ)
R396	7030003380	S.RESISTOR	ERJ3GEYJ 331 V (330 Ω)
R397	7030003380	S.RESISTOR	ERJ3GEYJ 331 V (330 Ω)
R398	7030003370	S.RESISTOR	ERJ3GEYJ 271 V (270 Ω)
R400	7030003490	S.RESISTOR	ERJ3GEYJ 272 V (2.7 kΩ)
R401	7030003490	S.RESISTOR	ERJ3GEYJ 272 V (2.7 kΩ)
R403	7030003520	S.RESISTOR	ERJ3GEYJ 472 V (4.7 kΩ)
R404	7030003400	S.RESISTOR	ERJ3GEYJ 471 V (470 Ω)
R405	7030003350	S.RESISTOR	ERJ3GEYJ 181 V (180 Ω)
R406	7030003350	S.RESISTOR	ERJ3GEYJ 181 V (180 Ω)
R407	7070000250	RESISTOR	CRH200 R-02J 4.7 Ω (4R7)
R408	7030003280	S.RESISTOR	ERJ3GEYJ 470 V (47 Ω)
R409	7030003280	S.RESISTOR	ERJ3GEYJ 470 V (47 Ω)
R410	7030003310	S.RESISTOR	ERJ3GEYJ 820 V (82 Ω)
R411	7030003320	S.RESISTOR	ERJ3GEYJ 101 V (100 Ω)
R412	7030003310	S.RESISTOR	ERJ3GEYJ 820 V (82 Ω)
R413	7070000530	RESISTOR	CRH200 R-02J 33 Ω (330)
R414	7030003560	S.RESISTOR	ERJ3GEYJ 103 V (10 kΩ)
R415	7030003560	S.RESISTOR	ERJ3GEYJ 103 V (10 kΩ)
R416	7030003800	S.RESISTOR	ERJ3GEYJ 105 V (1 MΩ)
R417	7030003800	S.RESISTOR	ERJ3GEYJ 105 V (1 MΩ)
R418	7030003320	S.RESISTOR	ERJ3GEYJ 101 V (100 Ω)
R419	7030003500	S.RESISTOR	ERJ3GEYJ 332 V (3.3 kΩ)
R420	7030003530	S.RESISTOR	ERJ3GEYJ 562 V (5.6 kΩ)
R421	7030003340	S.RESISTOR	ERJ3GEYJ 151 V (150 Ω)
R422	7030003290	S.RESISTOR	ERJ3GEYJ 560 V (56 Ω)
R423	7030003280	S.RESISTOR	ERJ3GEYJ 470 V (47 Ω)
R424	7030003560	S.RESISTOR	ERJ3GEYJ 103 V (10 kΩ)
R425	7030003560	S.RESISTOR	ERJ3GEYJ 103 V (10 kΩ)
R426	7030003480	S.RESISTOR	ERJ3GEYJ 222 V (2.2 kΩ)
R427	7030003640	S.RESISTOR	ERJ3GEYJ 473 V (47 kΩ)
R428	7030003640	S.RESISTOR	ERJ3GEYJ 473 V (47 kΩ)
R429	7030003760	S.RESISTOR	ERJ3GEYJ 474 V (470 kΩ)
R430	7030003710	S.RESISTOR	ERJ3GEYJ 184 V (180 kΩ)
R431	7030003760	S.RESISTOR	ERJ3GEYJ 474 V (470 kΩ)
R432	7030003710	S.RESISTOR	ERJ3GEYJ 184 V (180 kΩ)
R433	7030003520	S.RESISTOR	ERJ3GEYJ 472 V (4.7 kΩ)
R434	7030003320	S.RESISTOR	ERJ3GEYJ 101 V (100 Ω)
R435	7030003520	S.RESISTOR	ERJ3GEYJ 472 V (4.7 kΩ)
R436	7030003520	S.RESISTOR	ERJ3GEYJ 472 V (4.7 kΩ)
R437	7030003320	S.RESISTOR	ERJ3GEYJ 101 V (100 Ω)
R438	7030003520	S.RESISTOR	ERJ3GEYJ 472 V (4.7 kΩ)
R439	7030003440	S.RESISTOR	ERJ3GEYJ 102 V (1 kΩ)
R440	7030003440	S.RESISTOR	ERJ3GEYJ 102 V (1 kΩ)
R441	7030003440	S.RESISTOR	ERJ3GEYJ 102 V (1 kΩ)
R442	7030003440	S.RESISTOR	ERJ3GEYJ 102 V (1 kΩ)
R443	7030003440	S.RESISTOR	ERJ3GEYJ 102 V (1 kΩ)
R444	7030003440	S.RESISTOR	ERJ3GEYJ 102 V (1 kΩ)
R445	7030003440	S.RESISTOR	ERJ3GEYJ 102 V (1 kΩ)
R446	7030003440	S.RESISTOR	ERJ3GEYJ 102 V (1 kΩ)
R447	7030003680	S.RESISTOR	ERJ3GEYJ 104 V (100 kΩ)
R448	7030003680	S.RESISTOR	ERJ3GEYJ 104 V (100 kΩ)
C1	4030006880	S.CERAMIC	C1608 JB 1H 472K-T-A
C2	4030006880	S.CERAMIC	C1608 JB 1H 472K-T-A
C3	4030006860	S.CERAMIC	C1608 JB 1H 102K-T-A
C4	4030008260	S.CERAMIC	C1608 UJ 1H 150J-T-A
C5	4030007010	S.CERAMIC	C1608 CH 1H 100D-T-A
C6	4510004990	ELECTROLITIC	16 MV 100 HC
C7	4030007120	S.CERAMIC	C1608 CH 1H 820J-T-A
C8	4030006880	S.CERAMIC	C1608 JB 1H 472K-T-A
C9	4030007630	S.CERAMIC	C1608 RH 1H 121J-T-A
C10	4030010070	S.CERAMIC	C1608 X7S 1C 104K-T-A
C12	4030006880	S.CERAMIC	C1608 JB 1H 472K-T-A
C13	4030006860	S.CERAMIC	C1608 JB 1H 102K-T-A
C16	4030007170	S.CERAMIC	C1608 CH 1H 221J-T-A

[PLL UNIT]

REF. NO.	ORDER NO.	DESCRIPTION	
C17	4030008010	S.CERAMIC	C1608 TH 1H 150J-T-A
C18	4030006910	S.CERAMIC	C1608 CH 1H 0R5C-T-A
C19	4030008010	S.CERAMIC	C1608 TH 1H 150J-T-A
C21	4030010070	S.CERAMIC	C1608 X7S 1C 104K-T-A
C22	4030010070	S.CERAMIC	C1608 X7S 1C 104K-T-A
C24	4030010070	S.CERAMIC	C1608 X7S 1C 104K-T-A
C25	4030010070	S.CERAMIC	C1608 X7S 1C 104K-T-A
C26	4030010070	S.CERAMIC	C1608 X7S 1C 104K-T-A
C28	4030010070	S.CERAMIC	C1608 X7S 1C 104K-T-A
C29	4030010070	S.CERAMIC	C1608 X7S 1C 104K-T-A
C31	4030010070	S.CERAMIC	C1608 X7S 1C 104K-T-A
C39	4030006860	S.CERAMIC	C1608 JB 1H 102K-T-A
C40	4030006880	S.CERAMIC	C1608 JB 1H 472K-T-A
C43	4510004990	ELECTROLITIC	16 MV 100 HC
C44	4030007080	S.CERAMIC	C1608 CH 1H 390J-T-A
C45	4030011570	S.CERAMIC	CM105 CH 101G 50AT
C47	4610001850	S.TRIMMER	TZBX4R200BA110T00
C48	4030007150	S.CERAMIC	C1608 CH 1H 151J-T-A
C50	4030007150	S.CERAMIC	C1608 CH 1H 151J-T-A
C51	4030007150	S.CERAMIC	C1608 CH 1H 151J-T-A
C52	4030007010	S.CERAMIC	C1608 CH 1H 100D-T-A
C53	4510004990	ELECTROLITIC	16 MV 100 HC
C54	4030006880	S.CERAMIC	C1608 JB 1H 472K-T-A
C55	4030006880	S.CERAMIC	C1608 JB 1H 472K-T-A
C56	4030006880	S.CERAMIC	C1608 JB 1H 472K-T-A
C57	4030006880	S.CERAMIC	C1608 JB 1H 472K-T-A
C58	4030006880	S.CERAMIC	C1608 JB 1H 472K-T-A
C61	4030006880	S.CERAMIC	C1608 JB 1H 472K-T-A
C62	4030010000	S.CERAMIC	C1608 CH 1H 510J-T-A
C63	4030006960	S.CERAMIC	C1608 CH 1H 050C-T-A
C64	4030010000	S.CERAMIC	C1608 CH 1H 510J-T-A
C65	4030006880	S.CERAMIC	C1608 JB 1H 472K-T-A
C66	4030006880	S.CERAMIC	C1608 JB 1H 472K-T-A
C67	4510004990	ELECTROLITIC	16 MV 100 HC
C68	4030006880	S.CERAMIC	C1608 JB 1H 472K-T-A
C69	4030006860	S.CERAMIC	C1608 JB 1H 102K-T-A
C71	4030007130	S.CERAMIC	C1608 CH 1H 101J-T-A
C75	4030006880	S.CERAMIC	C1608 JB 1H 472K-T-A
C76	4030006860	S.CERAMIC	C1608 JB 1H 102K-T-A
C77	4510003900	ELECTROLITIC	16 MV 22 HW
C78	4340000040	S.MYLAR	ECH-U 1H 102JB5
C79	4550000340	TANTALUM	DN 1C 100M
C80	4550000340	TANTALUM	DN 1C 100M
C81	4510004990	ELECTROLITIC	16 MV 100 HC
C82	4030010070	S.CERAMIC	C1608 X7S 1C 104K-T-A
C83	4030006880	S.CERAMIC	C1608 JB 1H 472K-T-A
C84	4030007170	S.CERAMIC	C1608 CH 1H 221J-T-A
C85	4030007030	S.CERAMIC	C1608 CH 1H 150J-T-A
C86	4610001270	S.TRIMMER	ECR-JA010 A12W
C87	4030007110	S.CERAMIC	C1608 CH 1H 680J-T-A
C88	4030007020	S.CERAMIC	C1608 CH 1H 120J-T-A
C89	4030007020	S.CERAMIC	C1608 CH 1H 120J-T-A
C90	4030006880	S.CERAMIC	C1608 JB 1H 472K-T-A
C92	4030006940	S.CERAMIC	C1608 CH 1H 030C-T-A
C93	4030006860	S.CERAMIC	C1608 JB 1H 102K-T-A
C94	4030007110	S.CERAMIC	C1608 CH 1H 680J-T-A
C95	4030007000	S.CERAMIC	C1608 CH 1H 090D-T-A
C96	4610001270	S.TRIMMER	ECR-JA010 A12W
C97	4030007090	S.CERAMIC	C1608 CH 1H 470J-T-A
C98	4030007020	S.CERAMIC	C1608 CH 1H 120J-T-A
C99	4030007020	S.CERAMIC	C1608 CH 1H 120J-T-A
C100	4030006880	S.CERAMIC	C1608 JB 1H 472K-T-A
C102	4030006940	S.CERAMIC	C1608 CH 1H 030C-T-A
C103	4030006860	S.CERAMIC	C1608 JB 1H 102K-T-A
C104	4340000100	S.MYLAR	ECHU 1C 473JB5
C105	4030010000	S.CERAMIC	C1608 CH 1H 510J-T-A
C106	4030007000	S.CERAMIC	C1608 CH 1H 090D-T-A
C107	4610001170	S.TRIMMER	ECR-JA006 A12W
C108	4030007090	S.CERAMIC	C1608 CH 1H 470J-T-A
C109	4030007020	S.CERAMIC	C1608 CH 1H 120J-T-A
C110	4030006990	S.CERAMIC	C1608 CH 1H 080D-T-A
C111	4030006880	S.CERAMIC	C1608 JB 1H 472K-T-A
C113	4030006940	S.CERAMIC	C1608 CH 1H 030C-T-A
C114	4030006860	S.CERAMIC	C1608 JB 1H 102K-T-A
C115	4030007070	S.CERAMIC	C1608 CH 1H 330J-T-A
C116	4030006970	S.CERAMIC	C1608 CH 1H 060D-T-A

S.=Surface mount

ManualsPlus.com

[PLL UNIT]

REF. NO.	ORDER NO.	DESCRIPTION	
C117	4610001170	S.TRIMMER	ECR-JA006 A12W
C118	4030007080	S.CERAMIC	C1608 CH 1H 390J-T-A
C119	4030007020	S.CERAMIC	C1608 CH 1H 120J-T-A
C120	4030006970	S.CERAMIC	C1608 CH 1H 060D-T-A
C122	4030006880	S.CERAMIC	C1608 JB 1H 472K-T-A
C123	4030010070	S.CERAMIC	C1608 X7S 1C 104K-T-A
C125	4030006940	S.CERAMIC	C1608 CH 1H 030C-T-A
C126	4030006860	S.CERAMIC	C1608 JB 1H 102K-T-A
C127	4340000100	S.MYLAR	ECHU 1C 473JB5
C128	4030006860	S.CERAMIC	C1608 JB 1H 102K-T-A
C129	4030006880	S.CERAMIC	C1608 JB 1H 472K-T-A
C130	4030006860	S.CERAMIC	C1608 JB 1H 102K-T-A
C131	4030006880	S.CERAMIC	C1608 JB 1H 472K-T-A
C133	4030006860	S.CERAMIC	C1608 JB 1H 102K-T-A
C134	4030007060	S.CERAMIC	C1608 CH 1H 270J-T-A
C135	4030007020	S.CERAMIC	C1608 CH 1H 120J-T-A
C136	4030007060	S.CERAMIC	C1608 CH 1H 270J-T-A
C137	4030006980	S.CERAMIC	C1608 CH 1H 070D-T-A
C138	4030007040	S.CERAMIC	C1608 CH 1H 180J-T-A
C139	4030006860	S.CERAMIC	C1608 JB 1H 102K-T-A
C140	4030006880	S.CERAMIC	C1608 JB 1H 472K-T-A
C141	4030006860	S.CERAMIC	C1608 JB 1H 102K-T-A
C142	4030010070	S.CERAMIC	C1608 X7S 1C 104K-T-A
C143	4030010070	S.CERAMIC	C1608 X7S 1C 104K-T-A
C145	4030010070	S.CERAMIC	C1608 X7S 1C 104K-T-A
C146	4030010070	S.CERAMIC	C1608 X7S 1C 104K-T-A
C147	4030010070	S.CERAMIC	C1608 X7S 1C 104K-T-A
C149	4030010070	S.CERAMIC	C1608 X7S 1C 104K-T-A
C150	4030010070	S.CERAMIC	C1608 X7S 1C 104K-T-A
C152	4030010070	S.CERAMIC	C1608 X7S 1C 104K-T-A
C155	4510004990	ELECTROLITIC	16 MV 100 HC
C163	4030006860	S.CERAMIC	C1608 JB 1H 102K-T-A
C164	4030006880	S.CERAMIC	C1608 JB 1H 472K-T-A
C165	4550000400	TANTALUM	DN 1C 2R2M
C166	4030007080	S.CERAMIC	C1608 CH 1H 390J-T-A
C168	4030011570	S.CERAMIC	CM105 CH 101G 50AT
C169	4610001850	S.TRIMMER	TZBX4R200BA110T00
C170	4030007150	S.CERAMIC	C1608 CH 1H 151J-T-A
C172	4030007150	S.CERAMIC	C1608 CH 1H 151J-T-A
C173	4030007010	S.CERAMIC	C1608 CH 1H 100D-T-A
C174	4030006880	S.CERAMIC	C1608 JB 1H 472K-T-A
C175	4510004990	ELECTROLITIC	16 MV 100 HC
C176	4030006880	S.CERAMIC	C1608 JB 1H 472K-T-A
C177	4030006880	S.CERAMIC	C1608 JB 1H 472K-T-A
C178	4030006880	S.CERAMIC	C1608 JB 1H 472K-T-A
C179	4030006880	S.CERAMIC	C1608 JB 1H 472K-T-A
C180	4030006880	S.CERAMIC	C1608 JB 1H 472K-T-A
C183	4030006880	S.CERAMIC	C1608 JB 1H 472K-T-A
C184	4030010000	S.CERAMIC	C1608 CH 1H 510J-T-A
C185	4030006960	S.CERAMIC	C1608 CH 1H 050C-T-A
C186	4030010000	S.CERAMIC	C1608 CH 1H 510J-T-A
C187	4030006880	S.CERAMIC	C1608 JB 1H 472K-T-A
C188	4030006880	S.CERAMIC	C1608 JB 1H 472K-T-A
C189	4510004990	ELECTROLITIC	16 MV 100 HC
C190	4030006880	S.CERAMIC	C1608 JB 1H 472K-T-A
C191	4030006860	S.CERAMIC	C1608 JB 1H 102K-T-A
C193	4030007130	S.CERAMIC	C1608 CH 1H 101J-T-A
C197	4030006880	S.CERAMIC	C1608 JB 1H 472K-T-A
C198	4030006860	S.CERAMIC	C1608 JB 1H 102K-T-A
C199	4510003900	ELECTROLITIC	16 MV 22 HW
C200	4340000040	S.MYLAR	ECH-U 1H 102JB5
C201	4550000340	TANTALUM	DN 1C 100M
C202	4550000340	TANTALUM	DN 1C 100M
C203	4030007170	S.CERAMIC	C1608 CH 1H 221J-T-A
C204	4030007030	S.CERAMIC	C1608 CH 1H 150J-T-A
C205	4610001270	S.TRIMMER	ECR-JA010 A12W
C206	4030007110	S.CERAMIC	C1608 CH 1H 680J-T-A
C207	4030007020	S.CERAMIC	C1608 CH 1H 120J-T-A
C208	4030007020	S.CERAMIC	C1608 CH 1H 120J-T-A
C209	4030006880	S.CERAMIC	C1608 JB 1H 472K-T-A
C210	4510004990	ELECTROLITIC	16 MV 100 HC
C211	4030010070	S.CERAMIC	C1608 X7S 1C 104K-T-A
C212	4030006880	S.CERAMIC	C1608 JB 1H 472K-T-A
C214	4030006940	S.CERAMIC	C1608 CH 1H 030C-T-A
C215	4030006860	S.CERAMIC	C1608 JB 1H 102K-T-A
C216	4030007110	S.CERAMIC	C1608 CH 1H 680J-T-A

[PLL UNIT]

REF. NO.	ORDER NO.	DESCRIPTION	
C217	4030007000	S.CERAMIC	C1608 CH 1H 090D-T-A
C218	4610001270	S.TRIMMER	ECR-JA010 A12W
C219	4030007090	S.CERAMIC	C1608 CH 1H 470J-T-A
C220	4030007020	S.CERAMIC	C1608 CH 1H 120J-T-A
C221	4030007020	S.CERAMIC	C1608 CH 1H 120J-T-A
C222	4030006880	S.CERAMIC	C1608 JB 1H 472K-T-A
C224	4030006940	S.CERAMIC	C1608 CH 1H 030C-T-A
C225	4030006860	S.CERAMIC	C1608 JB 1H 102K-T-A
C226	4340000100	S.MYLAR	ECHU 1C 473JB5
C227	4030010000	S.CERAMIC	C1608 CH 1H 510J-T-A
C228	4030007000	S.CERAMIC	C1608 CH 1H 090D-T-A
C229	4610001170	S.TRIMMER	ECR-JA006 A12W
C230	4030007090	S.CERAMIC	C1608 CH 1H 470J-T-A
C231	4030007020	S.CERAMIC	C1608 CH 1H 120J-T-A
C232	4030006990	S.CERAMIC	C1608 CH 1H 080D-T-A
C233	4030006880	S.CERAMIC	C1608 JB 1H 472K-T-A
C235	4030006940	S.CERAMIC	C1608 CH 1H 030C-T-A
C236	4030006860	S.CERAMIC	C1608 JB 1H 102K-T-A
C237	4030007070	S.CERAMIC	C1608 CH 1H 330J-T-A
C238	4030006970	S.CERAMIC	C1608 CH 1H 060D-T-A
C239	4610001170	S.TRIMMER	ECR-JA006 A12W
C240	4030007080	S.CERAMIC	C1608 CH 1H 390J-T-A
C241	4030007020	S.CERAMIC	C1608 CH 1H 120J-T-A
C242	4030006970	S.CERAMIC	C1608 CH 1H 060D-T-A
C243	4030006880	S.CERAMIC	C1608 JB 1H 472K-T-A
C244	4030010070	S.CERAMIC	C1608 X7S 1C 104K-T-A
C247	4030006940	S.CERAMIC	C1608 CH 1H 030C-T-A
C248	4030006860	S.CERAMIC	C1608 JB 1H 102K-T-A
C249	4340000100	S.MYLAR	ECHU 1C 473JB5
C250	4030006860	S.CERAMIC	C1608 JB 1H 102K-T-A
C251	4030006880	S.CERAMIC	C1608 JB 1H 472K-T-A
C252	4030006860	S.CERAMIC	C1608 JB 1H 102K-T-A
C253	4030006880	S.CERAMIC	C1608 JB 1H 472K-T-A
C254	4030006860	S.CERAMIC	C1608 JB 1H 102K-T-A
C255	4030006860	S.CERAMIC	C1608 JB 1H 102K-T-A
C256	4030007060	S.CERAMIC	C1608 CH 1H 270J-T-A
C257	4030007020	S.CERAMIC	C1608 CH 1H 120J-T-A
C258	4030007060	S.CERAMIC	C1608 CH 1H 270J-T-A
C259	4030006980	S.CERAMIC	C1608 CH 1H 070D-T-A
C260	4030007040	S.CERAMIC	C1608 CH 1H 180J-T-A
C261	4030006860	S.CERAMIC	C1608 JB 1H 102K-T-A
C262	4030006880	S.CERAMIC	C1608 JB 1H 472K-T-A
C263	4030006860	S.CERAMIC	C1608 JB 1H 102K-T-A
C272	4030007010	S.CERAMIC	C1608 CH 1H 100D-T-A
C273	4030006970	S.CERAMIC	C1608 CH 1H 060D-T-A
C274	4030007060	S.CERAMIC	C1608 CH 1H 270J-T-A
C275	4030006940	S.CERAMIC	C1608 CH 1H 030C-T-A
C276	4030007060	S.CERAMIC	C1608 CH 1H 270J-T-A
C277	4030006920	S.CERAMIC	C1608 CH 1H 010C-T-A
C278	4030007040	S.CERAMIC	C1608 CH 1H 180J-T-A
C279	4030007030	S.CERAMIC	C1608 CH 1H 150J-T-A
C280	4030007030	S.CERAMIC	C1608 CH 1H 150J-T-A
C281	4030006880	S.CERAMIC	C1608 JB 1H 472K-T-A
C282	4030006880	S.CERAMIC	C1608 JB 1H 472K-T-A
C290	4030006990	S.CERAMIC	C1608 CH 1H 080D-T-A
C291	4030006950	S.CERAMIC	C1608 CH 1H 040C-T-A
C292	4030007050	S.CERAMIC	C1608 CH 1H 220J-T-A
C293	4030006930	S.CERAMIC	C1608 CH 1H 020C-T-A
C294	4030007050	S.CERAMIC	C1608 CH 1H 220J-T-A
C295	4030006910	S.CERAMIC	C1608 CH 1H 0R5C-T-A
C296	4030007030	S.CERAMIC	C1608 CH 1H 150J-T-A
C297	4030007020	S.CERAMIC	C1608 CH 1H 120J-T-A
C298	4030006880	S.CERAMIC	C1608 JB 1H 472K-T-A
C299	4030006880	S.CERAMIC	C1608 JB 1H 472K-T-A
C318	4030006910	S.CERAMIC	C1608 CH 1H 0R5C-T-A
C319	4030006990	S.CERAMIC	C1608 CH 1H 080D-T-A
C320	4030010070	S.CERAMIC	C1608 X7S 1C 104K-T-A
C321	4030010070	S.CERAMIC	C1608 X7S 1C 104K-T-A
C322	4030010070	S.CERAMIC	C1608 X7S 1C 104K-T-A
C323	4030006900	S.CERAMIC	C1608 JB 1E 103K-T-A
C324	4030006870	S.CERAMIC	C1608 JB 1H 222K-T-A
C325	4030008860	S.CERAMIC	C1608 JB 1C 153K-T-A
C326	4030010020	S.CERAMIC	C1608 JB 1H 122K-T-A
C327	4030008860	S.CERAMIC	C1608 JB 1C 153K-T-A
C328	4030006850	S.CERAMIC	C1608 JB 1H 471K-T-A
C329	4030006900	S.CERAMIC	C1608 JB 1E 103K-T-A

S.=Surface mount

ManualsPlus.com

[PLL UNIT]

REF. NO.	ORDER NO.	DESCRIPTION	
C333	4030006850	S.CERAMIC	C1608 JB 1H 471K-T-A
C334	4030006860	S.CERAMIC	C1608 JB 1H 102K-T-A
C335	4030007150	S.CERAMIC	C1608 CH 1H 151J-T-A
C336	4030009980	S.CERAMIC	C1608 JB 1H 152K-T-A
C337	4030007150	S.CERAMIC	C1608 CH 1H 151J-T-A
C338	4030008770	S.CERAMIC	C1608 JB 1H 562K-T-A
C339	4030006850	S.CERAMIC	C1608 JB 1H 471K-T-A
C349	4030007020	S.CERAMIC	C1608 CH 1H 120J-T-A
C350	4030006950	S.CERAMIC	C1608 CH 1H 040C-T-A
C351	4030007060	S.CERAMIC	C1608 CH 1H 270J-T-A
C352	4030006930	S.CERAMIC	C1608 CH 1H 020C-T-A
C353	4030007060	S.CERAMIC	C1608 CH 1H 270J-T-A
C354	4030006920	S.CERAMIC	C1608 CH 1H 010C-T-A
C355	4030007020	S.CERAMIC	C1608 CH 1H 120J-T-A
C356	4030006860	S.CERAMIC	C1608 JB 1H 102K-T-A
C357	4030006880	S.CERAMIC	C1608 JB 1H 472K-T-A
C358	4030006880	S.CERAMIC	C1608 JB 1H 472K-T-A
C366	4030006830	S.CERAMIC	C1608 SL 1H 331J-T-A
C367	4030006860	S.CERAMIC	C1608 JB 1H 102K-T-A
C368	4030007160	S.CERAMIC	C1608 CH 1H 181J-T-A
C369	4030009970	S.CERAMIC	C1608 JB 1H 182K-T-A
C370	4030007150	S.CERAMIC	C1608 CH 1H 151J-T-A
C371	4030006880	S.CERAMIC	C1608 JB 1H 472K-T-A
C372	4030006810	S.CERAMIC	C1608 SL 1H 271J-T-A
C384	4030006880	S.CERAMIC	C1608 JB 1H 472K-T-A
C385	4030006880	S.CERAMIC	C1608 JB 1H 472K-T-A
C386	4030006880	S.CERAMIC	C1608 JB 1H 472K-T-A
C387	4510003790	ELECTROLITIC	16 MV 10 SW
C389	4030010070	S.CERAMIC	C1608 X7S 1C 104K-T-A
C390	4030010070	S.CERAMIC	C1608 X7S 1C 104K-T-A
C392	4510003790	ELECTROLITIC	16 MV 10 SW
C393	4510003790	ELECTROLITIC	16 MV 10 SW
C395	4030010070	S.CERAMIC	C1608 X7S 1C 104K-T-A
C396	4030010070	S.CERAMIC	C1608 X7S 1C 104K-T-A
C398	4510003790	ELECTROLITIC	16 MV 10 SW
C399	4550000400	TANTALUM	DN 1C 2R2M
C400	4030006880	S.CERAMIC	C1608 JB 1H 472K-T-A
C401	4030006880	S.CERAMIC	C1608 JB 1H 472K-T-A
C402	4030007150	S.CERAMIC	C1608 CH 1H 151J-T-A
C404	4030006880	S.CERAMIC	C1608 JB 1H 472K-T-A
C405	4030006880	S.CERAMIC	C1608 JB 1H 472K-T-A
C406	4030006990	S.CERAMIC	C1608 CH 1H 080D-T-A
C407	4030006950	S.CERAMIC	C1608 CH 1H 040C-T-A
C408	4030007050	S.CERAMIC	C1608 CH 1H 220J-T-A
C409	4030006930	S.CERAMIC	C1608 CH 1H 020C-T-A
C410	4030007050	S.CERAMIC	C1608 CH 1H 220J-T-A
C411	4030006880	S.CERAMIC	C1608 JB 1H 472K-T-A
C412	4030006880	S.CERAMIC	C1608 JB 1H 472K-T-A
C413	4030006880	S.CERAMIC	C1608 JB 1H 472K-T-A
C414	4030006880	S.CERAMIC	C1608 JB 1H 472K-T-A
C415	4510003910	ELECTROLITIC	16 MV 47 HW
C416	4030008920	S.CERAMIC	C1608 JB 1C 473K-T-A
C417	4030006880	S.CERAMIC	C1608 JB 1H 472K-T-A
C418	4030007090	S.CERAMIC	C1608 CH 1H 470J-T-A
C419	4030006880	S.CERAMIC	C1608 JB 1H 472K-T-A
C420	4030006880	S.CERAMIC	C1608 JB 1H 472K-T-A
C421	4030006880	S.CERAMIC	C1608 JB 1H 472K-T-A
C422	4030006880	S.CERAMIC	C1608 JB 1H 472K-T-A
C423	4510003910	ELECTROLITIC	16 MV 47 HW
C424	4030008920	S.CERAMIC	C1608 JB 1C 473K-T-A
C425	4030006880	S.CERAMIC	C1608 JB 1H 472K-T-A
C426	4030007090	S.CERAMIC	C1608 CH 1H 470J-T-A
C427	4030007090	S.CERAMIC	C1608 CH 1H 470J-T-A
C428	4510003820	ELECTROLITIC	50 MV R22 SW
C429	4030006880	S.CERAMIC	C1608 JB 1H 472K-T-A
C430	4030006880	S.CERAMIC	C1608 JB 1H 472K-T-A
C431	4510004910	ELECTROLITIC	16 MV 10 SWNP
C432	4510003790	ELECTROLITIC	16 MV 10 SW
C433	4510003790	ELECTROLITIC	16 MV 10 SW
C437	4030006850	S.CERAMIC	C1608 JB 1H 471K-T-A
C438	4030007020	S.CERAMIC	C1608 CH 1H 120J-T-A
C440	4030006880	S.CERAMIC	C1608 JB 1H 472K-T-A
C441	4340000060	S.MYLAR	ECH-U 1C103JB5
C442	4340000060	S.MYLAR	ECH-U 1C103JB5
C443	4340000060	S.MYLAR	ECH-U 1C103JB5
C444	4340000060	S.MYLAR	ECH-U 1C103JB5

[PLL UNIT]

REF. NO.	ORDER NO.	DESCRIPTION	
C445	4030007140	S.CERAMIC	C1608 CH 1H 121J-T-A
C446	4030006850	S.CERAMIC	C1608 JB 1H 471K-T-A
C447	4030007090	S.CERAMIC	C1608 CH 1H 470J-T-A
C448	4030006830	S.CERAMIC	C1608 SL 1H 331J-T-A
C449	4030007120	S.CERAMIC	C1608 CH 1H 820J-T-A
C450	4030006830	S.CERAMIC	C1608 SL 1H 331J-T-A
C451	4030006860	S.CERAMIC	C1608 JB 1H 102K-T-A
C452	4030006830	S.CERAMIC	C1608 SL 1H 331J-T-A
C453	4030007120	S.CERAMIC	C1608 CH 1H 820J-T-A
C454	4030006830	S.CERAMIC	C1608 SL 1H 331J-T-A
C455	4510003790	ELECTROLITIC	16 MV 10 SW
C456	4030010070	S.CERAMIC	C1608 X7S 1C 104K-T-A
C457	4030010070	S.CERAMIC	C1608 X7S 1C 104K-T-A
C458	4510003790	ELECTROLITIC	16 MV 10 SW
C459	4030006880	S.CERAMIC	C1608 JB 1H 472K-T-A
C460	4030010070	S.CERAMIC	C1608 X7S 1C 104K-T-A
C461	4030010070	S.CERAMIC	C1608 X7S 1C 104K-T-A
C462	4030010070	S.CERAMIC	C1608 X7S 1C 104K-T-A
C463	4030010070	S.CERAMIC	C1608 X7S 1C 104K-T-A
C464	4030010070	S.CERAMIC	C1608 X7S 1C 104K-T-A
C465	4030010070	S.CERAMIC	C1608 X7S 1C 104K-T-A
C466	4030010070	S.CERAMIC	C1608 X7S 1C 104K-T-A
C467	4030010070	S.CERAMIC	C1608 X7S 1C 104K-T-A
C468	4030006880	S.CERAMIC	C1608 JB 1H 472K-T-A
C469	4030006880	S.CERAMIC	C1608 JB 1H 472K-T-A
C470	4030006880	S.CERAMIC	C1608 JB 1H 472K-T-A
C472	4030007090	S.CERAMIC	C1608 CH 1H 470J-T-A
C473	4030006810	S.CERAMIC	C1608 SL 1H 271J-T-A
C474	4030007090	S.CERAMIC	C1608 CH 1H 470J-T-A
C475	4030006810	S.CERAMIC	C1608 SL 1H 271J-T-A
C476	4030010070	S.CERAMIC	C1608 X7S 1C 104K-T-A
C477	4030007130	S.CERAMIC	C1608 CH 1H 101J-T-A
C478	4030010070	S.CERAMIC	C1608 X7S 1C 104K-T-A
C479	4030007130	S.CERAMIC	C1608 CH 1H 101J-T-A
C480	4030006880	S.CERAMIC	C1608 JB 1H 472K-T-A
C481	4030010070	S.CERAMIC	C1608 X7S 1C 104K-T-A
C482	4030010070	S.CERAMIC	C1608 X7S 1C 104K-T-A
C483	4030006880	S.CERAMIC	C1608 JB 1H 472K-T-A
C484	4030010070	S.CERAMIC	C1608 X7S 1C 104K-T-A
C485	4030010070	S.CERAMIC	C1608 X7S 1C 104K-T-A
C486	4030006880	S.CERAMIC	C1608 JB 1H 472K-T-A
C487	4030006880	S.CERAMIC	C1608 JB 1H 472K-T-A
C488	4030006880	S.CERAMIC	C1608 JB 1H 472K-T-A
C489	4030006860	S.CERAMIC	C1608 JB 1H 102K-T-A
C490	4030006860	S.CERAMIC	C1608 JB 1H 102K-T-A
C491	4030006880	S.CERAMIC	C1608 JB 1H 472K-T-A
C492	4030010070	S.CERAMIC	C1608 X7S 1C 104K-T-A
C493	4030007060	S.CERAMIC	C1608 CH 1H 270J-T-A
C494	4030007060	S.CERAMIC	C1608 CH 1H 270J-T-A
C495	4030010070	S.CERAMIC	C1608 X7S 1C 104K-T-A
C496	4030007090	S.CERAMIC	C1608 CH 1H 470J-T-A
C497	4030006880	S.CERAMIC	C1608 JB 1H 472K-T-A
C498	4030006880	S.CERAMIC	C1608 JB 1H 472K-T-A
J1	6510007020	CONNECTOR	TMP-J01X-V6
J2	6510007020	CONNECTOR	TMP-J01X-V6
J11	6510017660	CONNECTOR	52045-1645
J12	6510003080	CONNECTOR	RT01T-1.0B
J13	6510003080	CONNECTOR	RT01T-1.0B
J14	6510003080	CONNECTOR	RT01T-1.0B
J15	6510003080	CONNECTOR	RT01T-1.0B
WS1	8970021830	CABLE	1.5D COAXIAL (7)/PL
WS2	8600034240	CABLE	SX1528 P09*J09PL
EP1	0910043484	PCB	B 4304D

S.=Surface mount

ManualsPlus.com

[DDS-A BOARD]

REF. NO.	ORDER NO.	DESCRIPTION	
W11	7120000380	JUMPER	JPW 01 R-01
IC1	1140004550	S.IC	SC1287
IC2	1130003830	S.IC	TC7S04F (TE85R)
L1	6200001830	S.COIL	NL 322522T-100J
R1	7030003440	S.RESISTOR	ERJ3GEYJ 102 V (1 kΩ)
R2	7030003440	S.RESISTOR	ERJ3GEYJ 102 V (1 kΩ)
R3	7030003440	S.RESISTOR	ERJ3GEYJ 102 V (1 kΩ)
R4	7030003440	S.RESISTOR	ERJ3GEYJ 102 V (1 kΩ)
R8	7030003440	S.RESISTOR	ERJ3GEYJ 102 V (1 kΩ)
R9	7030003800	S.RESISTOR	ERJ3GEYJ 105 V (1 MΩ)
R10	7030003520	S.RESISTOR	ERJ3GEYJ 472 V (4.7 kΩ)
R11	7030003520	S.RESISTOR	ERJ3GEYJ 472 V (4.7 kΩ)
R12	7030003520	S.RESISTOR	ERJ3GEYJ 472 V (4.7 kΩ)
R13	7030005400	S.RESISTOR	RR0816P-202-D (2 kΩ)
R14	7030005400	S.RESISTOR	RR0816P-202-D (2 kΩ)
R15	7030005390	S.RESISTOR	RR0816P-102-D (1 kΩ)
R16	7030005400	S.RESISTOR	RR0816P-202-D (2 kΩ)
R17	7030005390	S.RESISTOR	RR0816P-102-D (1 kΩ)
R18	7030005400	S.RESISTOR	RR0816P-202-D (2 kΩ)
R19	7030005390	S.RESISTOR	RR0816P-102-D (1 kΩ)
R20	7030005400	S.RESISTOR	RR0816P-202-D (2 kΩ)
R21	7030005390	S.RESISTOR	RR0816P-102-D (1 kΩ)
R22	7030005400	S.RESISTOR	RR0816P-202-D (2 kΩ)
R23	7030005390	S.RESISTOR	RR0816P-102-D (1 kΩ)
R24	7030005400	S.RESISTOR	RR0816P-202-D (2 kΩ)
R25	7030005390	S.RESISTOR	RR0816P-102-D (1 kΩ)
R26	7030005400	S.RESISTOR	RR0816P-202-D (2 kΩ)
R27	7030005380	S.RESISTOR	RR0816P-102-B (1 kΩ)
R28	7030005370	S.RESISTOR	RR0816P-202-B (2 kΩ)
R29	7030005380	S.RESISTOR	RR0816P-102-B (1 kΩ)
R30	7030005370	S.RESISTOR	RR0816P-202-B (2 kΩ)
R31	7030005380	S.RESISTOR	RR0816P-102-B (1 kΩ)
R32	7030005370	S.RESISTOR	RR0816P-202-B (2 kΩ)
C1	4030006880	S.CERAMIC	C1608 JB 1H 472K-T-A
C2	4550006210	S.TANTALUM	ECST1CX106R
C4	4030006880	S.CERAMIC	C1608 JB 1H 472K-T-A
C5	4030006880	S.CERAMIC	C1608 JB 1H 472K-T-A
C6	4030006880	S.CERAMIC	C1608 JB 1H 472K-T-A
C7	4030006880	S.CERAMIC	C1608 JB 1H 472K-T-A
C8	4030006880	S.CERAMIC	C1608 JB 1H 472K-T-A
C9	4030006880	S.CERAMIC	C1608 JB 1H 472K-T-A
C10	4030010070	S.CERAMIC	C1608 X7S 1C 104K-T-A
EP1	0910043942	PCB	B 4362B
EP2	6910006550	LEADFRAM	HFB2.0-0.9-8 (N)

[DDS-B BOARD]

REF. NO.	ORDER NO.	DESCRIPTION	
IC1	1140004550	S.IC	SC1287
IC2	1130003830	S.IC	TC7S04F (TE85R)
L1	6200001830	S.COIL	NL 322522T-100J
R1	7030003440	S.RESISTOR	ERJ3GEYJ 102 V (1 kΩ)
R2	7030003440	S.RESISTOR	ERJ3GEYJ 102 V (1 kΩ)
R3	7030003440	S.RESISTOR	ERJ3GEYJ 102 V (1 kΩ)
R4	7030003440	S.RESISTOR	ERJ3GEYJ 102 V (1 kΩ)
R8	7030003440	S.RESISTOR	ERJ3GEYJ 102 V (1 kΩ)
R9	7030003800	S.RESISTOR	ERJ3GEYJ 105 V (1 MΩ)
R10	7030003520	S.RESISTOR	ERJ3GEYJ 472 V (4.7 kΩ)
R11	7030003520	S.RESISTOR	ERJ3GEYJ 472 V (4.7 kΩ)

[DDS-B BOARD]

REF. NO.	ORDER NO.	DESCRIPTION	
R12	7030003520	S.RESISTOR	ERJ3GEYJ 472 V (4.7 kΩ)
R13	7030005400	S.RESISTOR	RR0816P-202-D (2 kΩ)
R14	7030005400	S.RESISTOR	RR0816P-202-D (2 kΩ)
R15	7030005390	S.RESISTOR	RR0816P-102-D (1 kΩ)
R16	7030005400	S.RESISTOR	RR0816P-202-D (2 kΩ)
R17	7030005390	S.RESISTOR	RR0816P-102-D (1 kΩ)
R18	7030005400	S.RESISTOR	RR0816P-202-D (2 kΩ)
R19	7030005390	S.RESISTOR	RR0816P-102-D (1 kΩ)
R20	7030005400	S.RESISTOR	RR0816P-202-D (2 kΩ)
R21	7030005390	S.RESISTOR	RR0816P-102-D (1 kΩ)
R22	7030005400	S.RESISTOR	RR0816P-202-D (2 kΩ)
R23	7030005390	S.RESISTOR	RR0816P-102-D (1 kΩ)
R24	7030005400	S.RESISTOR	RR0816P-202-D (2 kΩ)
R25	7030005390	S.RESISTOR	RR0816P-102-D (1 kΩ)
R26	7030005400	S.RESISTOR	RR0816P-202-D (2 kΩ)
R27	7030005380	S.RESISTOR	RR0816P-102-B (1 kΩ)
R28	7030005370	S.RESISTOR	RR0816P-202-B (2 kΩ)
R29	7030005380	S.RESISTOR	RR0816P-102-B (1 kΩ)
R30	7030005370	S.RESISTOR	RR0816P-202-B (2 kΩ)
R31	7030005380	S.RESISTOR	RR0816P-102-B (1 kΩ)
R32	7030005370	S.RESISTOR	RR0816P-202-B (2 kΩ)
C1	4030006880	S.CERAMIC	C1608 JB 1H 472K-T-A
C2	4550006210	S.TANTALUM	ECST1CX106R
C4	4030006880	S.CERAMIC	C1608 JB 1H 472K-T-A
C5	4030006880	S.CERAMIC	C1608 JB 1H 472K-T-A
C6	4030006880	S.CERAMIC	C1608 JB 1H 472K-T-A
C7	4030006880	S.CERAMIC	C1608 JB 1H 472K-T-A
C8	4030006880	S.CERAMIC	C1608 JB 1H 472K-T-A
C9	4030006880	S.CERAMIC	C1608 JB 1H 472K-T-A
C10	4030010070	S.CERAMIC	C1608 X7S 1C 104K-T-A
EP1	0910043942	PCB	B 4362B
EP2	6910006550	LEADFRAM	HFB2.0-0.9-8 (N)

[DDS-C BOARD]

REF. NO.	ORDER NO.	DESCRIPTION	
IC1	1140004550	S.IC	SC1287
IC2	1130003830	S.IC	TC7S04F (TE85R)
L1	6200001830	S.COIL	NL 322522T-100J
R1	7030003440	S.RESISTOR	ERJ3GEYJ 102 V (1 kΩ)
R2	7030003440	S.RESISTOR	ERJ3GEYJ 102 V (1 kΩ)
R3	7030003440	S.RESISTOR	ERJ3GEYJ 102 V (1 kΩ)
R4	7030003440	S.RESISTOR	ERJ3GEYJ 102 V (1 kΩ)
R8	7030003440	S.RESISTOR	ERJ3GEYJ 102 V (1 kΩ)
R9	7030003800	S.RESISTOR	ERJ3GEYJ 105 V (1 MΩ)
R10	7030003520	S.RESISTOR	ERJ3GEYJ 472 V (4.7 kΩ)
R11	7030003520	S.RESISTOR	ERJ3GEYJ 472 V (4.7 kΩ)
R12	7030003520	S.RESISTOR	ERJ3GEYJ 472 V (4.7 kΩ)
R13	7030005400	S.RESISTOR	RR0816P-202-D (2 kΩ)
R14	7030005400	S.RESISTOR	RR0816P-202-D (2 kΩ)
R15	7030005390	S.RESISTOR	RR0816P-102-D (1 kΩ)
R16	7030005400	S.RESISTOR	RR0816P-202-D (2 kΩ)
R17	7030005390	S.RESISTOR	RR0816P-102-D (1 kΩ)
R18	7030005400	S.RESISTOR	RR0816P-202-D (2 kΩ)
R19	7030005390	S.RESISTOR	RR0816P-102-D (1 kΩ)
R20	7030005400	S.RESISTOR	RR0816P-202-D (2 kΩ)
R21	7030005390	S.RESISTOR	RR0816P-102-D (1 kΩ)
R22	7030005400	S.RESISTOR	RR0816P-202-D (2 kΩ)
R23	7030005390	S.RESISTOR	RR0816P-102-D (1 kΩ)
R24	7030005400	S.RESISTOR	RR0816P-202-D (2 kΩ)
R25	7030005390	S.RESISTOR	RR0816P-102-D (1 kΩ)
R26	7030005400	S.RESISTOR	RR0816P-202-D (2 kΩ)
R27	7030005380	S.RESISTOR	RR0816P-102-B (1 kΩ)
R28	7030005370	S.RESISTOR	RR0816P-202-B (2 kΩ)

S.=Surface mount

ManualsPlus.com

[DDS-C BOARD]

REF. NO.	ORDER NO.	DESCRIPTION	
R29	7030005380	S.RESISTOR	RR0816P-102-B (1 kΩ)
R30	7030005370	S.RESISTOR	RR0816P-202-B (2 kΩ)
R31	7030005380	S.RESISTOR	RR0816P-102-B (1 kΩ)
R32	7030005370	S.RESISTOR	RR0816P-202-B (2 kΩ)
C1	4030006880	S.CERAMIC	C1608 JB 1H 472K-T-A
C2	4550006210	S.TANTALUM	ECST1CX106R
C4	4030006880	S.CERAMIC	C1608 JB 1H 472K-T-A
C5	4030006880	S.CERAMIC	C1608 JB 1H 472K-T-A
C6	4030006880	S.CERAMIC	C1608 JB 1H 472K-T-A
C7	4030006880	S.CERAMIC	C1608 JB 1H 472K-T-A
C8	4030006880	S.CERAMIC	C1608 JB 1H 472K-T-A
C9	4030006880	S.CERAMIC	C1608 JB 1H 472K-T-A
C10	4030010070	S.CERAMIC	C1608 X7S 1C 104K-T-A
EP1	0910043942	PCB	B 4362B
EP2	6910006550	LEADFRAM	HFB2.0-0.9-8 (N)

[DDS-D BOARD]

REF. NO.	ORDER NO.	DESCRIPTION	
IC1	1140004550	S.IC	SC1287
IC2	1130003830	S.IC	TC7S04F (TE85R)
L1	6200001830	S.COIL	NL 322522T-100J
R1	7030003440	S.RESISTOR	ERJ3GEYJ 102 V (1 kΩ)
R2	7030003440	S.RESISTOR	ERJ3GEYJ 102 V (1 kΩ)
R3	7030003440	S.RESISTOR	ERJ3GEYJ 102 V (1 kΩ)
R4	7030003440	S.RESISTOR	ERJ3GEYJ 102 V (1 kΩ)
R8	7030003440	S.RESISTOR	ERJ3GEYJ 102 V (1 kΩ)
R9	7030003800	S.RESISTOR	ERJ3GEYJ 105 V (1 MΩ)
R10	7030003520	S.RESISTOR	ERJ3GEYJ 472 V (4.7 kΩ)
R11	7030003520	S.RESISTOR	ERJ3GEYJ 472 V (4.7 kΩ)
R12	7030003520	S.RESISTOR	ERJ3GEYJ 472 V (4.7 kΩ)
R13	7030005400	S.RESISTOR	RR0816P-202-D (2 kΩ)
R14	7030005400	S.RESISTOR	RR0816P-202-D (2 kΩ)
R15	7030005390	S.RESISTOR	RR0816P-102-D (1 kΩ)
R16	7030005400	S.RESISTOR	RR0816P-202-D (2 kΩ)
R17	7030005390	S.RESISTOR	RR0816P-102-D (1 kΩ)
R18	7030005400	S.RESISTOR	RR0816P-202-D (2 kΩ)
R19	7030005390	S.RESISTOR	RR0816P-102-D (1 kΩ)
R20	7030005400	S.RESISTOR	RR0816P-202-D (2 kΩ)
R21	7030005390	S.RESISTOR	RR0816P-102-D (1 kΩ)
R22	7030005400	S.RESISTOR	RR0816P-202-D (2 kΩ)
R23	7030005390	S.RESISTOR	RR0816P-102-D (1 kΩ)
R24	7030005400	S.RESISTOR	RR0816P-202-D (2 kΩ)
R25	7030005390	S.RESISTOR	RR0816P-102-D (1 kΩ)
R26	7030005400	S.RESISTOR	RR0816P-202-D (2 kΩ)
R27	7030005380	S.RESISTOR	RR0816P-102-B (1 kΩ)
R28	7030005370	S.RESISTOR	RR0816P-202-B (2 kΩ)
R29	7030005380	S.RESISTOR	RR0816P-102-B (1 kΩ)
R30	7030005370	S.RESISTOR	RR0816P-202-B (2 kΩ)
R31	7030005380	S.RESISTOR	RR0816P-102-B (1 kΩ)
R32	7030005370	S.RESISTOR	RR0816P-202-B (2 kΩ)
C1	4030006880	S.CERAMIC	C1608 JB 1H 472K-T-A
C2	4550006210	S.TANTALUM	ECST1CX106R
C4	4030006880	S.CERAMIC	C1608 JB 1H 472K-T-A
C5	4030006880	S.CERAMIC	C1608 JB 1H 472K-T-A
C6	4030006880	S.CERAMIC	C1608 JB 1H 472K-T-A
C7	4030006880	S.CERAMIC	C1608 JB 1H 472K-T-A
C8	4030006880	S.CERAMIC	C1608 JB 1H 472K-T-A
C9	4030006880	S.CERAMIC	C1608 JB 1H 472K-T-A
C10	4030010070	S.CERAMIC	C1608 X7S 1C 104K-T-A

[MARKER BOARD]

REF. NO.	ORDER NO.	DESCRIPTION	
EP1	0910043942	PCB	B 4362B
EP2	6910006550	LEADFRAM	HFB2.0-0.9-8 (N)
IC1	1120002241	S.IC	TC74AC112F(TP1)
IC2	1130007131	S.IC	TC74HC390AF(EL)
IC3	1130003830	S.IC	TC7S04F (TE85R)
Q1	1530002690	S.TRANSISTOR	2SC4116-GR (TE85R)
Q2	1510000510	S.TRANSISTOR	2SA1576 T107 R
Q3	1590000680	S.TRANSISTOR	DTC114EU T107
L1	6200001830	S.COIL	NL 322522T-100J
R1	7030003800	S.RESISTOR	ERJ3GEYJ 105 V (1 MΩ)
R2	7030003600	S.RESISTOR	ERJ3GEYJ 223 V (22 kΩ)
R3	7030003600	S.RESISTOR	ERJ3GEYJ 223 V (22 kΩ)
R4	7030003440	S.RESISTOR	ERJ3GEYJ 102 V (1 kΩ)
R6	7030003650	S.RESISTOR	ERJ3GEYJ 563 V (56 kΩ)
R7	7030003420	S.RESISTOR	ERJ3GEYJ 681 V (680 Ω)
R10	7030003330	S.RESISTOR	ERJ3GEYJ 121 V (120 Ω)
R11	7030003410	S.RESISTOR	ERJ3GEYJ 561 V (560 Ω)
R12	7030003520	S.RESISTOR	ERJ3GEYJ 472 V (4.7 kΩ)
C1	4030006880	S.CERAMIC	C1608 JB 1H 472K-T-A
C2	4030006880	S.CERAMIC	C1608 JB 1H 472K-T-A
C3	4030010070	S.CERAMIC	C1608 X7S 1C 104K-T-A
C4	4030010070	S.CERAMIC	C1608 X7S 1C 104K-T-A
C5	4030010070	S.CERAMIC	C1608 X7S 1C 104K-T-A
C6	4030006880	S.CERAMIC	C1608 JB 1H 472K-T-A
C7	4030006880	S.CERAMIC	C1608 JB 1H 472K-T-A
C8	4550006210	S.TANTALUM	ECST1CX106R
C9	4030006880	S.CERAMIC	C1608 JB 1H 472K-T-A
C10	4550006210	S.TANTALUM	ECST1CX106R
C11	4030006880	S.CERAMIC	C1608 JB 1H 472K-T-A
C12	4030010070	S.CERAMIC	C1608 X7S 1C 104K-T-A
EP1	0910043952	PCB	B 4363B
EP2	6910006550	LEADFRAM	HFB2.0-0.9-8 (N)

S.=Surface mount

ManualsPlus.com

[PA UNIT]

REF. NO.	ORDER NO.	DESCRIPTION	
IC1	1180001250	S.IC	TA7808F(TE16L)
Q1	1560000750	FET	2SK619
Q2	1560000730	FET	2SK408
Q3	1560000740	FET	2SK409
Q4	1560000820	FET	MRF140MP(SRFJ7004MP)
Q5	1520000650	S.TRANSISTOR	2SB1201-S-TL
Q7	1520000650	S.TRANSISTOR	2SB1201-S-TL
Q8	1530002060	S.TRANSISTOR	2SC4081 T107 R
Q9	1530002060	S.TRANSISTOR	2SC4081 T107 R
Q10	1520000530	S.TRANSISTOR	2SB1119S-TD
Q11	1590000430	S.TRANSISTOR	DTC144EU T107
D1	1710000030	DIODE	1S1555
D2	1750000270	S.DIODE	1SS301 (TE85R)
L1	6140002620	COIL	LR-302
L2	2040000490	COIL	EXC-ELDR25C
L3	6140002220	COIL	LR-270 (TR6X3X2 3A9)
L4	6140002220	COIL	LR-270 (TR6X3X2 3A9)
L5	2040000490	COIL	EXC-ELDR25C
L6	2040000490	COIL	EXC-ELDR25C
L7	6140002750	COIL	LR-311
L8	6140002590	COIL	LR-296 (TR18X8X8 D12A)
L9	6180001570	COIL	LAL 04NA 4R7K
L11	2040000490	COIL	EXC-ELDR25C
L12	6140002800	COIL	LR-318
L13	6140002030	COIL	LR-230 (SK-10M-15Y 120)
L14	6200001830	S.COIL	NL 322522T-100J
R1	7030003430	S.RESISTOR	ERJ3GEYJ 821 V (820 Ω)
R2	7030004030	S.RESISTOR	ERJ3GEYJ 5R6 V (5.6 Ω)
R3	7030003430	S.RESISTOR	ERJ3GEYJ 821 V (820 Ω)
R4	7030003550	S.RESISTOR	ERJ3GEYJ 822 V (8.2 kΩ)
R5	7030003400	S.RESISTOR	ERJ3GEYJ 471 V (470 Ω)
R6	7030003510	S.RESISTOR	ERJ3GEYJ 392 V (3.9 kΩ)
R7	7030000340	S.RESISTOR	MCR10EZHJ 470 Ω (471)
R8	7030003460	S.RESISTOR	ERJ3GEYJ 152 V (1.5 kΩ)
R9	7310000740	TRIMMER	RH0651CS3J2KA (472)
R10	7030006070	S.RESISTOR	ERJ12YJ101H (100 Ω)
R11	7030006070	S.RESISTOR	ERJ12YJ101H (100 Ω)
R12	7030003480	S.RESISTOR	ERJ3GEYJ 222 V (2.2 kΩ)
R13	7030003480	S.RESISTOR	ERJ3GEYJ 222 V (2.2 kΩ)
R14	7030006150	S.RESISTOR	ERJ1WYJ271H (270 Ω)
R15	7030006150	S.RESISTOR	ERJ1WYJ271H (270 Ω)
R16	7030006140	S.RESISTOR	ERJ1WYJ560H (56 Ω)
R17	7030003520	S.RESISTOR	ERJ3GEYJ 472 V (4.7 kΩ)
R18	7310000780	TRIMMER	RH0651CS4J25A (473)
R19	7030006140	S.RESISTOR	ERJ1WYJ560H (56 Ω)
R20	7030003520	S.RESISTOR	ERJ3GEYJ 472 V (4.7 kΩ)
R21	7310000780	TRIMMER	RH0651CS4J25A (473)
R22	7030003580	S.RESISTOR	ERJ3GEYJ 153 V (15 kΩ)
R23	7030003580	S.RESISTOR	ERJ3GEYJ 153 V (15 kΩ)
R24	7070000380	RESISTOR	CRH200 R-02J 10 Ω (100)
R25	7070000380	RESISTOR	CRH200 R-02J 10 Ω (100)
R26	7070000770	RESISTOR	CRH200 R-02J 6.8 Ω (6R8)
R27	7030006140	S.RESISTOR	ERJ1WYJ560H (56 Ω)
R28	7030006060	S.RESISTOR	ERJ12YJ100H (10 Ω)
R29	7510000070	THERMISTOR	ERT-D2FHL 503S
R30	7030003440	S.RESISTOR	ERJ3GEYJ 102 V (1 kΩ)
R33	7030003500	S.RESISTOR	ERJ3GEYJ 332 V (3.3 kΩ)
R34	7030003500	S.RESISTOR	ERJ3GEYJ 332 V (3.3 kΩ)
R35	7100000640	RESISTOR	5 SI 0.012 Ω (J)
R36	7030003500	S.RESISTOR	ERJ3GEYJ 332 V (3.3 kΩ)
R37	7030003500	S.RESISTOR	ERJ3GEYJ 332 V (3.3 kΩ)
R38	7030006120	S.RESISTOR	ERJ1WYJ4R7H (4.7 Ω)
R39	7070000680	RESISTOR	CRH300 R-02J 3.9 Ω (3R9)
R41	7030003560	S.RESISTOR	ERJ3GEYJ 103 V (10 kΩ)
R42	7070000680	RESISTOR	CRH300 R-02J 3.9 Ω (3R9)
R43	7030003560	S.RESISTOR	ERJ3GEYJ 103 V (10 kΩ)
R44	7030003440	S.RESISTOR	ERJ3GEYJ 102 V (1 kΩ)
R45	7030006600	S.RESISTOR	RR0816P-822-D (8.2 kΩ)
R46	7030006580	S.RESISTOR	RR0816P-122-D (1.2 kΩ)
R47	7030006600	S.RESISTOR	RR0816P-822-D (8.2 kΩ)

[PA UNIT]

REF. NO.	ORDER NO.	DESCRIPTION	
R48	7030006590	S.RESISTOR	RR0816P-511-D (510 Ω)
R49	7030003560	S.RESISTOR	ERJ3GEYJ 103 V (10 kΩ)
R50	7030003440	S.RESISTOR	ERJ3GEYJ 102 V (1 kΩ)
R51	7030003440	S.RESISTOR	ERJ3GEYJ 102 V (1 kΩ)
C1	4030010070	S.CERAMIC	C1608 X7S 1C 104K-T-A
C2	4030010070	S.CERAMIC	C1608 X7S 1C 104K-T-A
C3	4030006880	S.CERAMIC	C1608 JB 1H 472K-T-A
C4	4030008700	S.CERAMIC	GRM40 B 473K 50PT
C5	4030008960	S.CERAMIC	C2012 JB 1C 104K-T-A
C6	4030008960	S.CERAMIC	C2012 JB 1C 104K-T-A
C7	4030008960	S.CERAMIC	C2012 JB 1C 104K-T-A
C8	4030008960	S.CERAMIC	C2012 JB 1C 104K-T-A
C9	4030008700	S.CERAMIC	GRM40 B 473K 50PT
C10	4010007620	CERAMIC	DSXE65SJ YF 473Z
C11	4010007620	CERAMIC	DSXE65SJ YF 473Z
C12	4010007620	CERAMIC	DSXE65SJ YF 473Z
C13	4010007620	CERAMIC	DSXE65SJ YF 473Z
C14	4010005840	CERAMIC	HM86SJ YB 222K 500V
C15	4010005840	CERAMIC	HM86SJ YB 222K 500V
C17	4510004630	S.ELECTROLITIC	ECEV1CA100SR
C18	4030006880	S.CERAMIC	C1608 JB 1H 472K-T-A
C19	4510005000	ELECTROLITIC	16 MV 220 HC
C20	4030006880	S.CERAMIC	C1608 JB 1H 472K-T-A
C21	4030006880	S.CERAMIC	C1608 JB 1H 472K-T-A
C22	4510004630	S.ELECTROLITIC	ECEV1CA100SR
C23	4510005930	ELECTROLITIC	35 MV 470 AZ
C24	4510005930	ELECTROLITIC	35 MV 470 AZ
C25	4010006900	CERAMIC	HE80SJ YB 472K 50V
C26	4010007620	CERAMIC	DSXE65SJ YF 473Z
C28	4030006870	S.CERAMIC	C1608 JB 1H 222K-T-A
C29	4030006870	S.CERAMIC	C1608 JB 1H 222K-T-A
C30	4030006880	S.CERAMIC	C1608 JB 1H 472K-T-A
C31	4030008700	S.CERAMIC	GRM40 B 473K 50PT
C33	4030006880	S.CERAMIC	C1608 JB 1H 472K-T-A
C34	4030008700	S.CERAMIC	GRM40 B 473K 50PT
C35	4560000040	CERAMIC	D67X5T 1H 684M51
C36	4510005870	S.ELECTROLITIC	ECEV1HA3R3SR
C37	4010007480	CERAMIC	HM19SJ YB 153K 500V
C38	4010007480	CERAMIC	HM19SJ YB 153K 500V
C39	4010007480	CERAMIC	HM19SJ YB 153K 500V
C40	4010007480	CERAMIC	HM19SJ YB 153K 500V
C42	4030006880	S.CERAMIC	C1608 JB 1H 472K-T-A
C44	4030010070	S.CERAMIC	C1608 X7S 1C 104K-T-A
C47	4030010070	S.CERAMIC	C1608 X7S 1C 104K-T-A
C48	4510004630	S.ELECTROLITIC	ECEV1CA100SR
C49	4510004630	S.ELECTROLITIC	ECEV1CA100SR
C50	4030010070	S.CERAMIC	C1608 X7S 1C 104K-T-A
C51	4030006880	S.CERAMIC	C1608 JB 1H 472K-T-A
C52	4030006880	S.CERAMIC	C1608 JB 1H 472K-T-A
C53	4030006880	S.CERAMIC	C1608 JB 1H 472K-T-A
C54	4030006880	S.CERAMIC	C1608 JB 1H 472K-T-A
C55	4010005880	CERAMIC	HM95SJ SL 271J 500V
C56	4510004590	ELECTROLITIC	16 MV 470 HC
J2	6510003080	CONNECTOR	RT01T-1.0B
J3	6510003390	CONNECTOR	B03B-EH-S
J4	6510017850	CONNECTOR	52045-1045
J5	6510003080	CONNECTOR	RT01T-1.0B
J6	6510003080	CONNECTOR	RT01T-1.0B
J7	6510003080	CONNECTOR	RT01T-1.0B
J8	6510003080	CONNECTOR	RT01T-1.0B
J9	6510003080	CONNECTOR	RT01T-1.0B
J10	6510017920	CONNECTOR	1811P342
W12	7120000380	JUMPER	JPW 01 R-01
W13	7120000380	JUMPER	JPW 01 R-01
WS2	8970021850	CABLE	1.5D COAXIAL (1)/PA200W
EP1	6910000610	BEAD	FSOH050RN01
EP2	6910000610	BEAD	FSOH050RN01
EP3	6910000610	BEAD	FSOH050RN01
EP4	6910000610	BEAD	FSOH050RN01
EP5	6910000630	BEAD	FSOH070RN
EP8	0910044003	PCB	B 4302C

S.=Surface mount

ManualsPlus.com

[FILTER UNIT]

REF. NO.	ORDER NO.	DESCRIPTION	
IC1	1130007720	IC	BU4094BC
IC2	1110003660	IC	TD62783AP
L1	6110002900	COIL	LA-479
L2	6110002890	COIL	LA-478
L3	6140002290	COIL	LR-242 (T68-10)
L4	6140002290	COIL	LR-242 (T68-10)
L5	6140002000	COIL	LR-227 (T68-2)
L6	6140002000	COIL	LR-227 (T68-2)
L7	6140002290	COIL	LR-242 (T68-10)
L8	6140002270	COIL	LR-240 (T68-6)
L9	6140002270	COIL	LR-240 (T68-6)
L10	6140002260	COIL	LR-238 (T68-2)
L11	6140002260	COIL	LR-238 (T68-2)
L12	6140002770	COIL	LR-313 (T68-2)
L13	6140002770	COIL	LR-313 (T68-2)
L14	6140002250	COIL	LR-237 (T68-2)
L15	6140002270	COIL	LR-240 (T68-6)
L16	6180000900	COIL	LAL 03NA 101K
L17	6180000900	COIL	LAL 03NA 101K
L18	6180000900	COIL	LAL 03NA 101K
L19	6180000900	COIL	LAL 03NA 101K
L20	6180000900	COIL	LAL 03NA 101K
L21	6180000900	COIL	LAL 03NA 101K
L22	6180000900	COIL	LAL 03NA 101K
L23	6180000900	COIL	LAL 03NA 101K
L24	6180000900	COIL	LAL 03NA 101K
L25	6180000900	COIL	LAL 03NA 101K
L26	6180000900	COIL	LAL 03NA 101K
L27	6180000900	COIL	LAL 03NA 101K
L28	6180000900	COIL	LAL 03NA 101K
L29	6180000900	COIL	LAL 03NA 101K
L30	6180000900	COIL	LAL 03NA 101K
L31	6180000900	COIL	LAL 03NA 101K
L32	6140002760	COIL	LR-312 (T68-2)
L33	6140002310	COIL	LR-260 (T68-10)
R2	7010003160	RESISTOR	ELR20J 10 Ω
R3	7010003160	RESISTOR	ELR20J 10 Ω
R4	7010003160	RESISTOR	ELR20J 10 Ω
R5	7010003160	RESISTOR	ELR20J 10 Ω
R6	7010003160	RESISTOR	ELR20J 10 Ω
R7	7010003160	RESISTOR	ELR20J 10 Ω
R8	7010003160	RESISTOR	ELR20J 10 Ω
R9	7010003950	RESISTOR	R20J 10 Ω
R10	7010003950	RESISTOR	R20J 10 Ω
R11	7010003950	RESISTOR	R20J 10 Ω
C1	4010005780	CERAMIC	HM60SJ SL 101J 500V
C2	4010005640	CERAMIC	HM60SJ SL 180J 500V
C3	4010005780	CERAMIC	HM60SJ SL 101J 500V
C4	4010005770	CERAMIC	HM60SJ SL 820J 500V
C5	4010005720	CERAMIC	HM60SJ SL 390J 500V
C6	4010005740	CERAMIC	HM60SJ SL 560J 500V
C7	4010005750	CERAMIC	HM60SJ SL 680J 500V
C8	4010005670	CERAMIC	HM60SJ SL 240J 500V
C9	4010005780	CERAMIC	HM60SJ SL 101J 500V
C10	4010005820	CERAMIC	HM74SJ SL 121J 500V
C11	4010007640	CERAMIC	HM60SJ SL 430J 500V
C12	4010005780	CERAMIC	HM60SJ SL 101J 500V
C13	4010007590	CERAMIC	HM15SJ SL 681J 500V
C14	4010007510	CERAMIC	HM17SJ SL 821J 500V
C15	4010006410	CERAMIC	HM13SJ SL 471J 500V
C16	4010007510	CERAMIC	HM17SJ SL 821J 500V
C17	4010007510	CERAMIC	HM17SJ SL 821J 500V
C18	4010007500	CERAMIC	HM15SJ SL 751J 500V
C19	4010005860	CERAMIC	HM95SJ SL 201J 500V
C20	4010007490	CERAMIC	HM15SJ SL 561J 500V
C21	4010007590	CERAMIC	HM15SJ SL 681J 500V
C22	4010005880	CERAMIC	HM95SJ SL 271J 500V
C24	4010005720	CERAMIC	HM60SJ SL 390J 500V
C25	4010005870	CERAMIC	HM95SJ SL 221J 500V
C26	4010005780	CERAMIC	HM60SJ SL 101J 500V

[FILTER UNIT]

REF. NO.	ORDER NO.	DESCRIPTION	
C27	4010005660	CERAMIC	HM60SJ SL 220J 500V
C28	4010005850	CERAMIC	HM95SJ SL 181J 500V
C29	4010005370	CERAMIC	HM11SJ SL 331J 500V
C31	4010005780	CERAMIC	HM60SJ SL 101J 500V
C32	4010005370	CERAMIC	HM11SJ SL 331J 500V
C33	4010005930	CERAMIC	HM11SJ SL 391J 500V
C35	4010005730	CERAMIC	HM60SJ SL 470J 500V
C37	4010006410	CERAMIC	HM13SJ SL 471J 500V
C38	4010007590	CERAMIC	HM15SJ SL 681J 500V
C39	4010005820	CERAMIC	HM74SJ SL 121J 500V
C40	4010007510	CERAMIC	HM17SJ SL 821J 500V
C41	4010007510	CERAMIC	HM17SJ SL 821J 500V
C42	4010007610	CERAMIC	HM95SJ SL 241J 500V
C43	4010005780	CERAMIC	HM60SJ SL 101J 500V
C44	4010005880	CERAMIC	HM95SJ SL 271J 500V
C45	4010005720	CERAMIC	HM60SJ SL 390J 500V
C46	4010005880	CERAMIC	HM95SJ SL 271J 500V
C47	4010005870	CERAMIC	HM95SJ SL 221J 500V
C48	4010005770	CERAMIC	HM60SJ SL 820J 500V
C49	4010005870	CERAMIC	HM95SJ SL 221J 500V
C50	4010006900	CERAMIC	HE80SJ YB 472K 50V
C51	4010006900	CERAMIC	HE80SJ YB 472K 50V
C52	4010006900	CERAMIC	HE80SJ YB 472K 50V
C53	4010006900	CERAMIC	HE80SJ YB 472K 50V
C54	4010006900	CERAMIC	HE80SJ YB 472K 50V
C55	4010006900	CERAMIC	HE80SJ YB 472K 50V
C56	4010006900	CERAMIC	HE80SJ YB 472K 50V
C57	4010006900	CERAMIC	HE80SJ YB 472K 50V
C58	4010006900	CERAMIC	HE80SJ YB 472K 50V
C59	4010006900	CERAMIC	HE80SJ YB 472K 50V
C60	4010006900	CERAMIC	HE80SJ YB 472K 50V
C61	4010006900	CERAMIC	HE80SJ YB 472K 50V
C62	4010006900	CERAMIC	HE80SJ YB 472K 50V
C63	4010006900	CERAMIC	HE80SJ YB 472K 50V
C64	4010006900	CERAMIC	HE80SJ YB 472K 50V
C65	4510003790	ELECTROLITIC	16 MV 10 SW
C66	4510003790	ELECTROLITIC	16 MV 10 SW
C68	4010006900	CERAMIC	HE80SJ YB 472K 50V
C69	4530000250	ARRAY	B8XC0112-32N
C70	4010005630	CERAMIC	HM60SJ SL 150J 500V
C76	4010005770	CERAMIC	HM60SJ SL 820J 500V
C77	4010007640	CERAMIC	HM60SJ SL 430J 500V
RL1	6330001230	RELAY	AJS1341
RL2	6330001230	RELAY	AJS1341
RL3	6330001230	RELAY	AJS1341
RL4	6330001230	RELAY	AJS1341
RL5	6330001230	RELAY	AJS1341
RL6	6330001230	RELAY	AJS1341
RL7	6330001230	RELAY	AJS1341
RL8	6330001230	RELAY	AJS1341
RL9	6330001230	RELAY	AJS1341
RL10	6330001230	RELAY	AJS1341
RL11	6330001230	RELAY	AJS1341
RL12	6330001230	RELAY	AJS1341
RL13	6330001230	RELAY	AJS1341
RL14	6330001230	RELAY	AJS1341
J1	6510017650	CONNECTOR	52045-1045
J2	6510017650	CONNECTOR	52045-1045
J3	6510017920	CONNECTOR	1811P342
J4	6510017930	CONNECTOR	1771P145-20
EP1	0910044012	PCB	B 4303B

S.=Surface mount

ManualsPlus.com

[CTRL UNIT]

REF. NO.	ORDER NO.	DESCRIPTION	
IC1	1110000960	S.IC	NJM4558M(T1)
IC2	1110001850	IC	MC10116 L
IC3	1110001860	IC	MC10125 L
IC4	1130007280	S.IC	TC7S32FU(TE85R)
IC5	1120002241	S.IC	TC74AC112F(TP1)
IC6	1110000960	S.IC	NJM4558M(T1)
IC7	1180001070	S.IC	TA7805F(TE16L)
IC9	1160000130	S.IC	TD62783AF (TP1)
IC10	1130003920	S.IC	TC4S69F (TE85R)
IC11	1140003610	S.IC	X24C04S8-2.7
IC12	1110001550	S.IC	S-8054ALB-LM-T1
IC13	1140004120	S.IC	M38022M2-138FP
IC14	1160000130	S.IC	TD62783AF (TP1)
IC16	1110003700	S.IC	TD62083AFN(EL)
IC17	1130003920	S.IC	TC4S69F (TE85R)
IC18	1130003760	S.IC	TC4S81F (TE85R)
Q1	1560000870	S.FET	2SK515-T1B (X33)
Q2	1590001330	S.TRANSISTOR	DTA114EU T107
Q3	1590000680	S.TRANSISTOR	DTC114EU T107
Q4	1590001330	S.TRANSISTOR	DTA114EU T107
Q5	1530002690	S.TRANSISTOR	2SC4116-GR (TE85R)
Q6	1510000780	S.TRANSISTOR	2SA1586-Y (TE85R)
Q7	1510000780	S.TRANSISTOR	2SA1586-Y (TE85R)
Q8	1590000680	S.TRANSISTOR	DTC114EU T107
Q9	1590000680	S.TRANSISTOR	DTC114EU T107
Q10	1590000680	S.TRANSISTOR	DTC114EU T107
Q11	1590001330	S.TRANSISTOR	DTA114EU T107
Q14	1590000680	S.TRANSISTOR	DTC114EU T107
D1	1790000690	S.DIODE	HSM88ASR-TR
D2	1790000690	S.DIODE	HSM88ASR-TR
D3	1750000200	S.DIODE	1SS319 (TE85R)
D4	1790000620	S.DIODE	MA77(TW)
D5	1790000620	S.DIODE	MA77(TW)
D6	1790000620	S.DIODE	MA77(TW)
D7	1790000620	S.DIODE	MA77(TW)
D8	1750000270	S.DIODE	1SS301 (TE85R)
D9	1750000270	S.DIODE	1SS301 (TE85R)
D10	1750000420	S.DIODE	ND411G-2-T1
D11	1750000420	S.DIODE	ND411G-2-T1
D12	1790000690	S.DIODE	HSM88ASR-TR
D13	1790000690	S.DIODE	HSM88ASR-TR
D14	1750000200	S.DIODE	1SS319 (TE85R)
D15	1750000270	S.DIODE	1SS301 (TE85R)
D16	1750000270	S.DIODE	1SS301 (TE85R)
D17	1750000270	S.DIODE	1SS301 (TE85R)
D19	1710000780	S.DIODE	MA114(TX)
D20	1750000270	S.DIODE	1SS301 (TE85R)
D21	1730000410	S.ZENER	RD5.1M-T2B2
D22	1730000730	S.ZENER	RD6.2M-T2B2
D24	1750000270	S.DIODE	1SS301 (TE85R)
D25	1730000410	S.ZENER	RD5.1M-T2B2
X1	6050009080	XTAL	AT-49 (6.144MHz)
L2	6140002790	COIL	LR-316
L3	6200003260	S.COIL	NL 322522T-101J
L4	6200003260	S.COIL	NL 322522T-101J
L5	6200001830	S.COIL	NL 322522T-100J
L6	6180000960	COIL	LAL 03NA 102K
L7	6140002660	COIL	LR-299
L8	6180000960	COIL	LAL 03NA 102K
L9	6200003260	S.COIL	NL 322522T-101J
L10	6140002650	COIL	LR-298
L11	6200003260	S.COIL	NL 322522T-101J
L12	6200003260	S.COIL	NL 322522T-101J
L15	6140001460	COIL	LR-170
L16	6140001460	COIL	LR-170
L19	6180000900	COIL	LAL 03NA 101K
L20	6180000900	COIL	LAL 03NA 101K
L21	6180000900	COIL	LAL 03NA 101K

[CTRL UNIT]

REF. NO.	ORDER NO.	DESCRIPTION	
L22	6180000900	COIL	LAL 03NA 101K
L23	6180000900	COIL	LAL 03NA 101K
L24	6180000900	COIL	LAL 03NA 101K
L25	6180000900	COIL	LAL 03NA 101K
L26	6180000900	COIL	LAL 03NA 101K
L27	6180000900	COIL	LAL 03NA 101K
L28	6200003260	S.COIL	NL 322522T-101J
L29	6180000990	COIL	LAL 04NA 101K
L30	6200003260	S.COIL	NL 322522T-101J
L35	6200003260	S.COIL	NL 322522T-101J
L42	6180000450	COIL	RFC L6 222K
L43	6180000900	COIL	LAL 03NA 101K
L44	6180000900	COIL	LAL 03NA 101K
R3	7030007120	S.RESISTOR	ERJ1WYJ120H
R4	7030007120	S.RESISTOR	ERJ1WYJ120H
R5	7030003670	S.RESISTOR	ERJ3GEYJ 823 V (82 kΩ)
R6	7030003720	S.RESISTOR	ERJ3GEYJ 224 V (220 kΩ)
R7	7030003720	S.RESISTOR	ERJ3GEYJ 224 V (220 kΩ)
R8	7030003670	S.RESISTOR	ERJ3GEYJ 823 V (82 kΩ)
R9	7030003720	S.RESISTOR	ERJ3GEYJ 224 V (220 kΩ)
R10	7030003720	S.RESISTOR	ERJ3GEYJ 224 V (220 kΩ)
R12	7030003520	S.RESISTOR	ERJ3GEYJ 472 V (4.7 kΩ)
R13	7030003760	S.RESISTOR	ERJ3GEYJ 474 V (470 kΩ)
R14	7030003520	S.RESISTOR	ERJ3GEYJ 472 V (4.7 kΩ)
R15	7030003440	S.RESISTOR	ERJ3GEYJ 102 V (1 kΩ)
R16	7030000080	S.RESISTOR	MCR10EZHJ 3.3 Ω (3R3)
R17	7030003400	S.RESISTOR	ERJ3GEYJ 471 V (470 Ω)
R18	7030003760	S.RESISTOR	ERJ3GEYJ 474 V (470 kΩ)
R19	7030006540	S.RESISTOR	ERJ1WYJ330H
R20	7030003420	S.RESISTOR	ERJ3GEYJ 681 V (680 Ω)
R21	7030000080	S.RESISTOR	MCR10EZHJ 3.3 Ω (3R3)
R22	7030003400	S.RESISTOR	ERJ3GEYJ 471 V (470 Ω)
R24	7030003280	S.RESISTOR	ERJ3GEYJ 470 V (47 Ω)
R25	7030003280	S.RESISTOR	ERJ3GEYJ 470 V (47 Ω)
R27	7030003500	S.RESISTOR	ERJ3GEYJ 332 V (3.3 kΩ)
R28	7030003480	S.RESISTOR	ERJ3GEYJ 222 V (2.2 kΩ)
R31	7030007100	S.RESISTOR	RR0816P-432-D (4.3 kΩ)
R31	7030007100	S.RESISTOR	RR0816P-432-D (4.3 kΩ)
R32	7030005970	S.RESISTOR	RR0816R-683-D (68 kΩ)
R33	7030003480	S.RESISTOR	ERJ3GEYJ 222 V (2.2 kΩ)
R34	7030005730	S.RESISTOR	RR0816R-823-D (82 kΩ)
R35	7030003060	S.RESISTOR	MCR10EZHFX 680 kΩ (684)
R36	7030003560	S.RESISTOR	ERJ3GEYJ 103 V (10 kΩ)
R37	7030006140	S.RESISTOR	ERJ1WYJ560H (56 Ω)
R38	7030003560	S.RESISTOR	ERJ3GEYJ 103 V (10 kΩ)
R39	7030003560	S.RESISTOR	ERJ3GEYJ 103 V (10 kΩ)
R40	7030003800	S.RESISTOR	ERJ3GEYJ 105 V (1 MΩ)
R41	7030003560	S.RESISTOR	ERJ3GEYJ 103 V (10 kΩ)
R42	7030003520	S.RESISTOR	ERJ3GEYJ 472 V (4.7 kΩ)
R43	7030003440	S.RESISTOR	ERJ3GEYJ 102 V (1 kΩ)
R44	7030003560	S.RESISTOR	ERJ3GEYJ 103 V (10 kΩ)
R45	7030005870	S.RESISTOR	RR0816R-104-D (100 kΩ)
R46	7030006100	S.RESISTOR	RR0816P-183-D (18 kΩ)
R47	7030005690	S.RESISTOR	RR0816P-123-D (12 kΩ)
R48	7030005870	S.RESISTOR	RR0816R-104-D (100 kΩ)
R49	7030003060	S.RESISTOR	MCR10EZHFX 680 kΩ (684)
R50	7030003560	S.RESISTOR	ERJ3GEYJ 103 V (10 kΩ)
R52	7540000100	ABSORBER	SRYH-350L
R54	7030001060	S.RESISTOR	MCR50JZHJ 27 Ω (270)
R55	7030003680	S.RESISTOR	ERJ3GEYJ 104 V (100 kΩ)
R60	7030003680	S.RESISTOR	ERJ3GEYJ 104 V (100 kΩ)
R61	7030003720	S.RESISTOR	ERJ3GEYJ 224 V (220 kΩ)
R62	7030003720	S.RESISTOR	ERJ3GEYJ 224 V (220 kΩ)
R63	7030003760	S.RESISTOR	ERJ3GEYJ 474 V (470 kΩ)
R64	7030003440	S.RESISTOR	ERJ3GEYJ 102 V (1 kΩ)
R65	7030003640	S.RESISTOR	ERJ3GEYJ 473 V (47 kΩ)
R66	7030003410	S.RESISTOR	ERJ3GEYJ 561 V (560 Ω)
R67	7030003410	S.RESISTOR	ERJ3GEYJ 561 V (560 Ω)
R68	7030003560	S.RESISTOR	ERJ3GEYJ 103 V (10 kΩ)
R69	7030003640	S.RESISTOR	ERJ3GEYJ 473 V (47 kΩ)
R70	7030003440	S.RESISTOR	ERJ3GEYJ 102 V (1 kΩ)
R71	7030003440	S.RESISTOR	ERJ3GEYJ 102 V (1 kΩ)
R72	7030003440	S.RESISTOR	ERJ3GEYJ 102 V (1 kΩ)
R73	7030003560	S.RESISTOR	ERJ3GEYJ 103 V (10 kΩ)

S.=Surface mount

ManualsPlus.com

[CTRL UNIT]

REF. NO.	ORDER NO.	DESCRIPTION	
R74	7030003440	S.RESISTOR	ERJ3GEYJ 102 V (1 kΩ)
R75	7030003650	S.RESISTOR	ERJ3GEYJ 563 V (56 kΩ)
R76	7030003440	S.RESISTOR	ERJ3GEYJ 102 V (1 kΩ)
R78	7030003520	S.RESISTOR	ERJ3GEYJ 472 V (4.7 kΩ)
R79	7030003200	S.RESISTOR	ERJ3GEYJ 100 V (10 Ω)
R80	7030003200	S.RESISTOR	ERJ3GEYJ 100 V (10 Ω)
R81	7030003200	S.RESISTOR	ERJ3GEYJ 100 V (10 Ω)
R82	7030003200	S.RESISTOR	ERJ3GEYJ 100 V (10 Ω)
R83	7030003200	S.RESISTOR	ERJ3GEYJ 100 V (10 Ω)
R84	7030003200	S.RESISTOR	ERJ3GEYJ 100 V (10 Ω)
R85	7030003560	S.RESISTOR	ERJ3GEYJ 103 V (10 kΩ)
R86	7030003560	S.RESISTOR	ERJ3GEYJ 103 V (10 kΩ)
R87	7030001460	S.RESISTOR	MCR50JZHJ 47 kΩ (473)
R88	7030001210	S.RESISTOR	MCR50JZHJ 470 Ω (471)
R89	7030001210	S.RESISTOR	MCR50JZHJ 470 Ω (471)
R95	7030003480	S.RESISTOR	ERJ3GEYJ 222 V (2.2 kΩ)
R96	7030003560	S.RESISTOR	ERJ3GEYJ 103 V (10 kΩ)
R97	7030003560	S.RESISTOR	ERJ3GEYJ 103 V (10 kΩ)
R100	7030003560	S.RESISTOR	ERJ3GEYJ 103 V (10 kΩ)
R101	7030003560	S.RESISTOR	ERJ3GEYJ 103 V (10 kΩ)
R102	7030003560	S.RESISTOR	ERJ3GEYJ 103 V (10 kΩ)
R103	7030003560	S.RESISTOR	ERJ3GEYJ 103 V (10 kΩ)
R104	7030003560	S.RESISTOR	ERJ3GEYJ 103 V (10 kΩ)
R105	7030003560	S.RESISTOR	ERJ3GEYJ 103 V (10 kΩ)
R106	7030003560	S.RESISTOR	ERJ3GEYJ 103 V (10 kΩ)
R107	7030003560	S.RESISTOR	ERJ3GEYJ 103 V (10 kΩ)
R108	7030003560	S.RESISTOR	ERJ3GEYJ 103 V (10 kΩ)
R109	7030003560	S.RESISTOR	ERJ3GEYJ 103 V (10 kΩ)
R110	7030003560	S.RESISTOR	ERJ3GEYJ 103 V (10 kΩ)
R111	7030003560	S.RESISTOR	ERJ3GEYJ 103 V (10 kΩ)
R112	7030003560	S.RESISTOR	ERJ3GEYJ 103 V (10 kΩ)
R113	7030003560	S.RESISTOR	ERJ3GEYJ 103 V (10 kΩ)
R114	7030003560	S.RESISTOR	ERJ3GEYJ 103 V (10 kΩ)
R115	7030003560	S.RESISTOR	ERJ3GEYJ 103 V (10 kΩ)
R116	7030003200	S.RESISTOR	ERJ3GEYJ 100 V (10 Ω)
R117	7030003200	S.RESISTOR	ERJ3GEYJ 100 V (10 Ω)
R118	7030003200	S.RESISTOR	ERJ3GEYJ 100 V (10 Ω)
R119	7030003200	S.RESISTOR	ERJ3GEYJ 100 V (10 Ω)
R120	7030003200	S.RESISTOR	ERJ3GEYJ 100 V (10 Ω)
R121	7030003200	S.RESISTOR	ERJ3GEYJ 100 V (10 Ω)
R122	7030003200	S.RESISTOR	ERJ3GEYJ 100 V (10 Ω)
R123	7030003200	S.RESISTOR	ERJ3GEYJ 100 V (10 Ω)
R127	7030003820	S.RESISTOR	ERJ3GEYJ 155 V (1.5 MΩ)
R128	7030003200	S.RESISTOR	ERJ3GEYJ 100 V (10 Ω)
R129	7030003200	S.RESISTOR	ERJ3GEYJ 100 V (10 Ω)
R130	7030003560	S.RESISTOR	ERJ3GEYJ 103 V (10 kΩ)
R131	7030003560	S.RESISTOR	ERJ3GEYJ 103 V (10 kΩ)
R132	7030003650	S.RESISTOR	ERJ3GEYJ 563 V (56 kΩ)
R133	7540000100	ABSORBER	SRYH-350L
R134	7030003840	S.RESISTOR	ERJ3GEYJ 225 V (2.2 MΩ)
C1	4030006850	S.CERAMIC	C1608 JB 1H 471K-T-A
C2	4030006850	S.CERAMIC	C1608 JB 1H 471K-T-A
C3	4010005540	CERAMIC	HM60SJ SL 030C 500V
C4	4030006850	S.CERAMIC	C1608 JB 1H 471K-T-A
C6	4030010070	S.CERAMIC	C1608 X7S 1C 104K-T-A
C7	4030010070	S.CERAMIC	C1608 X7S 1C 104K-T-A
C9	4030006850	S.CERAMIC	C1608 JB 1H 471K-T-A
C10	4010005530	CERAMIC	HM60SJ SL 020C 500V
C11	4030007040	S.CERAMIC	C1608 CH 1H 180J-T-A
C12	4030007040	S.CERAMIC	C1608 CH 1H 180J-T-A
C13	4030007120	S.CERAMIC	C1608 CH 1H 820J-T-A
C14	4030007160	S.CERAMIC	C1608 CH 1H 181J-T-A
C15	4030010070	S.CERAMIC	C1608 X7S 1C 104K-T-A
C16	4030006880	S.CERAMIC	C1608 JB 1H 472K-T-A
C17	4030010070	S.CERAMIC	C1608 X7S 1C 104K-T-A
C18	4510003790	ELECTROLITIC	16 MV 10 SW
C19	4030010070	S.CERAMIC	C1608 X7S 1C 104K-T-A
C20	4030010070	S.CERAMIC	C1608 X7S 1C 104K-T-A
C21	4030007170	S.CERAMIC	C1608 CH 1H 221J-T-A
C22	4030007170	S.CERAMIC	C1608 CH 1H 221J-T-A
C23	4030006880	S.CERAMIC	C1608 JB 1H 472K-T-A
C24	4010005540	CERAMIC	HM60SJ SL 030C 500V
C25	4030007110	S.CERAMIC	C1608 CH 1H 680J-T-A
C26	4030007120	S.CERAMIC	C1608 CH 1H 820J-T-A

[CTRL UNIT]

REF. NO.	ORDER NO.	DESCRIPTION	
C27	4030006880	S.CERAMIC	C1608 JB 1H 472K-T-A
C28	4030006880	S.CERAMIC	C1608 JB 1H 472K-T-A
C29	4030006860	S.CERAMIC	C1608 JB 1H 102K-T-A
C30	4030006880	S.CERAMIC	C1608 JB 1H 472K-T-A
C31	4030006880	S.CERAMIC	C1608 JB 1H 472K-T-A
C32	4030010070	S.CERAMIC	C1608 X7S 1C 104K-T-A
C33	4510003790	ELECTROLITIC	16 MV 10 SW
C34	4030010070	S.CERAMIC	C1608 X7S 1C 104K-T-A
C35	4030007170	S.CERAMIC	C1608 CH 1H 221J-T-A
C36	4030006850	S.CERAMIC	C1608 JB 1H 471K-T-A
C37	4030010070	S.CERAMIC	C1608 X7S 1C 104K-T-A
C38	4030007170	S.CERAMIC	C1608 CH 1H 221J-T-A
C39	4030006850	S.CERAMIC	C1608 JB 1H 471K-T-A
C40	4030010070	S.CERAMIC	C1608 X7S 1C 104K-T-A
C41	4510003790	ELECTROLITIC	16 MV 10 SW
C42	4030010070	S.CERAMIC	C1608 X7S 1C 104K-T-A
C43	4030010070	S.CERAMIC	C1608 X7S 1C 104K-T-A
C44	4030010070	S.CERAMIC	C1608 X7S 1C 104K-T-A
C45	4030010070	S.CERAMIC	C1608 X7S 1C 104K-T-A
C46	4030007130	S.CERAMIC	C1608 CH 1H 101J-T-A
C48	4030007160	S.CERAMIC	C1608 CH 1H 181J-T-A
C49	4030006980	S.CERAMIC	C1608 CH 1H 070D-T-A
C50	4030007130	S.CERAMIC	C1608 CH 1H 101J-T-A
C51	4010007580	CERAMIC	HT20SJ SL 201J 3KV
C52	4010007580	CERAMIC	HT20SJ SL 201J 3KV
C53	4010007580	CERAMIC	HT20SJ SL 201J 3KV
C54	4010007580	CERAMIC	HT20SJ SL 201J 3KV
C55	4030010070	S.CERAMIC	C1608 X7S 1C 104K-T-A
C56	4030010070	S.CERAMIC	C1608 X7S 1C 104K-T-A
C57	4010007570	CERAMIC	HT15SJ SL 151J 3KV
C58	4010007570	CERAMIC	HT15SJ SL 151J 3KV
C59	4010007570	CERAMIC	HT15SJ SL 151J 3KV
C60	4010007570	CERAMIC	HT15SJ SL 151J 3KV
C61	4030010070	S.CERAMIC	C1608 X7S 1C 104K-T-A
C62	4030010070	S.CERAMIC	C1608 X7S 1C 104K-T-A
C63	4010007550	CERAMIC	HT11SJ SL 820J 3KV
C64	4010007550	CERAMIC	HT11SJ SL 820J 3KV
C65	4010007560	CERAMIC	HT15SJ SL 101J 3KV
C66	4010007560	CERAMIC	HT15SJ SL 101J 3KV
C67	4030010070	S.CERAMIC	C1608 X7S 1C 104K-T-A
C68	4030010070	S.CERAMIC	C1608 X7S 1C 104K-T-A
C72	4510004590	ELECTROLITIC	16 MV 470 HC
C73	4030010070	S.CERAMIC	C1608 X7S 1C 104K-T-A
C74	4030010070	S.CERAMIC	C1608 X7S 1C 104K-T-A
C75	4510003790	ELECTROLITIC	16 MV 10 SW
C76	4030006880	S.CERAMIC	C1608 JB 1H 472K-T-A
C77	4030006880	S.CERAMIC	C1608 JB 1H 472K-T-A
C78	4030009000	S.CERAMIC	C2012 JB 1C 224K-T-A
C79	4030006860	S.CERAMIC	C1608 JB 1H 102K-T-A
C80	4030006880	S.CERAMIC	C1608 JB 1H 472K-T-A
C81	4030006880	S.CERAMIC	C1608 JB 1H 472K-T-A
C82	4030009990	S.CERAMIC	C1608 CH 1H 200J-T-A
C83	4030009990	S.CERAMIC	C1608 CH 1H 200J-T-A
C84	4030006880	S.CERAMIC	C1608 JB 1H 472K-T-A
C86	4030006900	S.CERAMIC	C1608 JB 1E 103K-T-A
C87	4030006900	S.CERAMIC	C1608 JB 1E 103K-T-A
C88	4030010070	S.CERAMIC	C1608 X7S 1C 104K-T-A
C89	4030010070	S.CERAMIC	C1608 X7S 1C 104K-T-A
C90	4030010070	S.CERAMIC	C1608 X7S 1C 104K-T-A
C91	4030010070	S.CERAMIC	C1608 X7S 1C 104K-T-A
C95	4030010070	S.CERAMIC	C1608 X7S 1C 104K-T-A
C96	4510003790	ELECTROLITIC	16 MV 10 SW
C97	4510003790	ELECTROLITIC	16 MV 10 SW
C98	4030010070	S.CERAMIC	C1608 X7S 1C 104K-T-A
C99	4030010070	S.CERAMIC	C1608 X7S 1C 104K-T-A
C101	4030007140	S.CERAMIC	C1608 CH 1H 121J-T-A
C102	4010005570	CERAMIC	HM60SJ SL 060D 500V
C104	4030010750	S.CERAMIC	C1608 CH 1H 201J-T-A
C105	4030010070	S.CERAMIC	C1608 X7S 1C 104K-T-A
C106	4010005630	CERAMIC	HM60SJ SL 150J 500V
C107	4030007100	S.CERAMIC	C1608 CH 1H 560J-T-A
C110	4030010070	S.CERAMIC	C1608 X7S 1C 104K-T-A
C111	4030010070	S.CERAMIC	C1608 X7S 1C 104K-T-A
C112	4030010070	S.CERAMIC	C1608 X7S 1C 104K-T-A
C113	4030010070	S.CERAMIC	C1608 X7S 1C 104K-T-A
C114	4030010070	S.CERAMIC	C1608 X7S 1C 104K-T-A

S.=Surface mount

ManualsPlus.com

[CTRL UNIT]

REF. NO.	ORDER NO.	DESCRIPTION	
C115	4030010070	S.CERAMIC	C1608 X7S 1C 104K-T-A
C116	4030010070	S.CERAMIC	C1608 X7S 1C 104K-T-A
C117	4030010070	S.CERAMIC	C1608 X7S 1C 104K-T-A
C118	4030010070	S.CERAMIC	C1608 X7S 1C 104K-T-A
C119	4030010070	S.CERAMIC	C1608 X7S 1C 104K-T-A
C120	4030010070	S.CERAMIC	C1608 X7S 1C 104K-T-A
C121	4030010070	S.CERAMIC	C1608 X7S 1C 104K-T-A
C122	4030010070	S.CERAMIC	C1608 X7S 1C 104K-T-A
C123	4030010070	S.CERAMIC	C1608 X7S 1C 104K-T-A
C124	4030010070	S.CERAMIC	C1608 X7S 1C 104K-T-A
C125	4030010070	S.CERAMIC	C1608 X7S 1C 104K-T-A
C127	4030006880	S.CERAMIC	C1608 JB 1H 472K-T-A
C128	4010007570	CERAMIC	HT15SJ SL 151J 3KV
C129	4010007570	CERAMIC	HT15SJ SL 151J 3KV
C130	4010007570	CERAMIC	HT15SJ SL 151J 3KV
C131	4010007570	CERAMIC	HT15SJ SL 151J 3KV
C132	4010007550	CERAMIC	HT11SJ SL 820J 3KV
C133	4010007550	CERAMIC	HT11SJ SL 820J 3KV
C134	4610001260	S.TRIMMER	ECR-JA020 E12W
C135	4030010070	S.CERAMIC	C1608 X7S 1C 104K-T-A
C136	4030010070	S.CERAMIC	C1608 X7S 1C 104K-T-A
C137	4030010070	S.CERAMIC	C1608 X7S 1C 104K-T-A
C138	4010007580	CERAMIC	HT20SJ SL 201J 3KV
C139	4010007580	CERAMIC	HT20SJ SL 201J 3KV
C140	4010007580	CERAMIC	HT20SJ SL 201J 3KV
C141	4010007580	CERAMIC	HT20SJ SL 201J 3KV
C142	4010007560	CERAMIC	HT15SJ SL 101J 3KV
C143	4010007560	CERAMIC	HT15SJ SL 101J 3KV
C150	4030010070	S.CERAMIC	C1608 X7S 1C 104K-T-A
C151	4510003850	ELECTROLITIC	50 MV 2R2 SW
C152	4030007110	S.CERAMIC	C1608 CH 1H 680J-T-A
RL1	6330000201	RELAY	VS-12TBU-E-UL3
RL2	6330000201	RELAY	VS-12TBU-E-UL3
RL3	6330001210	RELAY	VB-12TBU-UL3
RL4	6330000470	RELAY	NR-HD (12V) AE5343
RL5	6330001200	RELAY	VS-12MBU UL3
RL6	6330001200	RELAY	VS-12MBU UL3
RL7	6330001200	RELAY	VS-12MBU UL3
RL8	6330001200	RELAY	VS-12MBU UL3
RL9	6330001200	RELAY	VS-12MBU UL3
RL10	6330001200	RELAY	VS-12MBU UL3
RL11	6330000830	RELAY	JY-12H-K-DW
RL12	6330001220	RELAY	TC-112MN
S1	2220000460	SWITCH	ESD-11V220
J1	6510017920	CONNECTOR	1811P342
J4	6450000150	CONNECTOR	JPJ2545-01-510
J6	6510003410	CONNECTOR	B05B-EH-S
J7	6510003410	CONNECTOR	B05B-EH-S
J9	6510017750	CONNECTOR	52044-1045
J11	6510017750	CONNECTOR	52044-1045
J12	6510017750	CONNECTOR	52044-1045
J13	6510003080	CONNECTOR	RT01T-1.0B
W1	7120000380	JUMPER	JPW 01 R-01
W2	7120000380	JUMPER	JPW 01 R-01
W3	7120000380	JUMPER	JPW 01 R-01
W4	7120000380	JUMPER	JPW 01 R-01
W5	7120000380	JUMPER	JPW 01 R-01
W6	7120000380	JUMPER	JPW 01 R-01
W7	7120000010	JUMPER	JPW 02A
W8	7120000010	JUMPER	JPW 02A
W9	7120000010	JUMPER	JPW 02A
W18	7030003860	S.JUMPER	ERJ3GE JPW V
WS1	8600034250	CABLE	SX1528 P01✱J08CT
EP1	0910044273	PCB	B 4288C

[TUNER PARTS]

REF. NO.	ORDER NO.	DESCRIPTION	
MF1	2710000460	MOTOR	MP28GA Stepping motor
MF2	2710000460	MOTOR	MP28GA Stepping motor
MF3	2710000470	FAN	MF60B-12H901
W1	8900005350	CABLE	OPC-523
J1	6510000410	CONNECTOR	MR-DS-E 02
J2	6510000410	CONNECTOR	MR-DS-E 02
EP1	8930030420	COVER	FG60B

[RELAY UNIT]

REF. NO.	ORDER NO.	DESCRIPTION	
Q1	1520000080	TRANSISTOR	2SB909M R
Q2	1590000340	TRANSISTOR	RN1202
L1	6110003060	COIL	LA-493
L2	6110003050	COIL	LA-492
L3	6110003050	COIL	LA-492
L4	6110003060	COIL	LA-493
L5	6110003070	COIL	LA-494
L6	6140002710	COIL	LR-308 (T130-6)
L7	6140002700	COIL	LR-307 (T130-2)
L8	6140002700	COIL	LR-307 (T130-2)
L9	6180000990	COIL	LAL 04NA 101K
R1	7010004730	RESISTOR	R50XJ 120 Ω
R2	7010003400	RESISTOR	ELR20J 1 kΩ
C1	4620000120	VARIABLE	UV44 150P
C2	4620000120	VARIABLE	UV44 150P
C3	4010006900	CERAMIC	HE80SJ YB 472K 50V
C4	4010006900	CERAMIC	HE80SJ YB 472K 50V
C5	4010006900	CERAMIC	HE80SJ YB 472K 50V
C6	4010006900	CERAMIC	HE80SJ YB 472K 50V
C7	4010006900	CERAMIC	HE80SJ YB 472K 50V
C8	4010006900	CERAMIC	HE80SJ YB 472K 50V
C9	4040000150	BARRIERLAYR	UAT 05X 472K
RL1	6330001200	RELAY	VS-12MBU UL3
RL2	6330001200	RELAY	VS-12MBU UL3
RL3	6330001200	RELAY	VS-12MBU UL3
RL4	6330001200	RELAY	VS-12MBU UL3
RL5	6330001200	RELAY	VS-12MBU UL3
RL6	6330001200	RELAY	VS-12MBU UL3
J1	6510017650	CONNECTOR	52045-1045
J6	6510003400	CONNECTOR	B04B-EH-S
EP1	0910044263	PCB	B 4287C
EP2	6510018330	TERMINAL	F4053A
EP3	6510018330	TERMINAL	F4053A
EP4	6510018330	TERMINAL	F4053A
EP5	6510018330	TERMINAL	F4053A

S.=Surface mount

ManualsPlus.com

[REG UNIT]

REF. NO.	ORDER NO.	DESCRIPTION		
FI1	2040000220	FILTER	10DEEG3M	
F1	5220000240	HOLDER	PFP9090-0203	
F2	5220000270	HOLDER	PFP9090-0403	
F3	5210000430	FUSE	FGMB 125V 12A	[120 V]
F3	5210000410	FUSE	S505-N5A-T	[230 V]
W1	8900005790	CABLE	OPC-570	
S1	2230000950	SWITCH	ESB99887V	
MF1	2710000520	FAN	SB0812H-ICOM-00	
EP1	6910008580	REG UNIT	RPS-3701	
EP2	6910008330	FIN GURD	G80-18	

[FRONT PARTS]

REF. NO.	ORDER NO.	DESCRIPTION	
ME1	5510000430	METER	ME-35
S2	2250000130	ENCODER	SW-152 (EC24B50B0013B)
W1	8900005320	FFC	OPC-519
W3	8900005350	CABLE	OPC-523
W4	8900005360	CABLE	OPC-533
W5	8900005340	CABLE	OPC-522
W6	8900005340	CABLE	OPC-522
W7	8900005330	CABLE	OPC-526
WS1	8600034170	CABLE	SX1528 P01FR
EP1	6910008640	SENSOR UNIT	MKE-250-2 (115-010-16)
EP2	6450001230	PLATE	HLJ0999-01-480

[REAR PARTS]

REF. NO.	ORDER NO.	DESCRIPTION	
W1	8900005400	CABLE	OPC-520
W2	8900005410	CABLE	OPC-521
W3	8900005370	CABLE	OPC-524
W4	8900005370	CABLE	OPC-524
MF1	2710000520	FAN	SB0812H-ICOM-00

S.=Surface mount

ManualsPlus.com

SECTION 7 MECHANICAL PARTS

[CHASSIS PARTS]

REF. NO.	ORDER NO.	DESCRIPTION	QTY.
W1	8900005340	Cable OPC-522 (N: 6, L: 100)	1
W2	8900005340	Cable OPC-522 (N: 6, L: 100)	1
W3	8900005350	Cable OPC-523 (N: 10, L: 100)	1
W4	8900005370	Cable OPC-524 (N: 10, L: 150)	1
W5	8900005350	Cable OPC-523 (N: 10, L: 100)	1
W6	8900005350	Cable OPC-523 (N: 10, L: 100)	1
W7	8900005380	Cable OPC-525 (N: 10, L: 400)	1
W8	8900005330	Cable OPC-526 (N: 16, L: 100)	1
W9	8900005330	Cable OPC-526 (N: 16, L: 100)	1
W10	8900005330	Cable OPC-526 (N: 16, L: 100)	1
W11	8900005390	Cable OPC-527 (N: 20, L: 100)	1
W12	8900005390	Cable OPC-527 (N: 20, L: 100)	1
W15	8900000930	Cable OPC-092	1
MP1	8110005621	1528 top cover -1 (complete)	1
MP2	8110005410	1528 bottom cover	1
MP3	8930011640	Main stand	2
MP4	8930011630	Sub stand	2
MP5	8930011700	Main stand rubber	2
MP6	8930011690	Sub stand rubber	2
MP7	8930011770	Stand spring	2
MP8	8930011680	Rubber foot (G)	2
MP9	8010015780	1528 main chassis	1
MP10	8010015810	1528 sub chassis	1
MP11	8930034170	1528 right angle	1
MP12	8930034180	1528 left angle	1
MP13	8210011710	1528 rear panel	1
MP20	8810008630	Screw PH BT M3 x 6 NI-ZU	2
MP21	8810008630	Screw PH BT M3 x 6 NI-ZU	3
MP22	8810008630	Screw PH BT M3 x 6 NI-ZU	4
MP23	8810008630	Screw PH BT M3 x 6 NI-ZU	8
MP24	8810008630	Screw PH BT M3 x 6 NI-ZU	6
MP25	8810008630	Screw PH BT M3 x 6 NI-ZU	10
MP26	8810008630	Screw PH BT M3 X 6 NI-ZU	2
MP27	8810008630	Screw PH BT M3 x 6 NI-ZU	2
MP28	8810008630	Screw PH BT M3 x 6 NI-ZU	2
MP29	8810008630	Screw PH BT M3 x 6 NI-ZU	3
MP31	8810008630	Screw PH BT M3 x 6 NI-ZU	2
MP33	8810008630	Screw PH BT M3 x 6 NI-ZU	3
MP35	8810008630	Screw PH BT M3 x 6 NI-ZU	2
MP36	8810008450	Screw BiH M4 x 8 ZK	18
MP37	8810008450	Screw BiH M4 x 8 ZK	4
MP44	8850000440	Spring washer M5 NI	1
MP45	8830000360	Wing nut M5 NI	1
MP46	8850000150	Flat washer M5 NI BS	3
MP47	8830000210	Nut M5 NI BS	1
MP48	8510009520	1528 RF shield case	1
MP49	8930034480	1528 SP rubber	1
MP51	8810007410	Screw PH M3 x 6 NI	2
MP52	8810008410	Screw FH BT M3 x 8 ZK	4
MP53	8930013150	Insulation plate AW	1
MP54	8950002460	Clamp S-10 (silver)	1
MP55	8950002460	Clamp S-10 (silver)	4
MP56	8930037830	Sponge (ED)	1
MP58	8950001290	Tape 9510 W=9, L=50 mm	3
SP1	2510000760	Speaker SM-77KY0208	1

[FRONT PARTS]

REF. NO.	ORDER NO.	DESCRIPTION	QTY.
S2	2250000130	Switch SW-152	1
W1	8900005320	Cable OPC-519 (N: 30, L: 55)	1
W3	8900005350	Cable OPC-523 (N: 10, L: 100)	1
W4	8900005360	Cable OPC-533 (N: 6, L: 150)	1
W5	8900005340	Cable OPC-522 (N: 6, L: 100)	1
W6	8900005340	Cable OPC-522 (N: 6, L: 100)	1
W7	8900005330	Cable OPC-526 (N: 16, L: 100)	1

[FRONT PARTS]

REF. NO.	ORDER NO.	DESCRIPTION	QTY.
EP1	6910008640	Sensor unit MKE-250-2	1
EP2	6450001230	Plate HLJ0999-01-480	2
ME1	5510000430	Meter ME-35	1
MP1	8210011902	1528 front panel (B) -2 (IC-775)	1
	8210011912	1528 front panel (C) -2 (IC-775DSP)	1
MP2	8310034340	1528 window plate	1
MP3	8210011701	1528 window panel -1	1
MP4	8930034070	1528 43key	1
MP5	8610009360	Button K214	1
MP6	8610009370	Button K215	1
MP7	8610009380	Button K216	1
MP8	8610009390	Button K217	1
MP9	8610009400	Button K218	1
MP10	8610009410	Button K219	1
MP11	8610009420	Button K220	1
MP12	8610009700	Button K221 (A)	1
MP13	8930027110	Spring (P)	1
MP14	8610008440	Button K201 spacer	1
MP15	8610009440	Button K222	1
MP16	8610009450	Button K223	3
MP17	8930027960	1296 spring	4
MP18	8610009620	Knob N45 (E)	1
MP19	8610008500	Knob N69 (A)	1
MP20	8610009580	Knob N72 (B)	5
MP21	8610009560	Knob N121 (A)	5
MP22	8610009570	Knob N123 (B)	1
MP23	8610010070	Knob N222 (assembly)	1
MP25	8610010080	Knob N223 (assembly)	1
MP31	8610009530	Knob N227	2
MP32	8610009540	Knob N228	6
MP35	8930034100	1528 break spring	1
MP36	8930034110	1528 break plate	1
MP37	8930034120	1528 sheet	1
MP38	8930032380	Shaft tape (B)	1
MP39	8930034190	1528 jack plate	1
MP40	8810008760	Screw PH BT M2 x 8 NI-ZU	5
MP41	8810008760	Screw PH BT M2 x 8 NI-ZU	10
MP42	8810008760	Screw PH BT M2 x 8 NI-ZU	1
MP43	8810008760	Screw PH BT M2 x 8 NI-ZU	4
MP44	8810008760	Screw PH BT M2 x 8 NI-ZU	1
MP45	8810008760	Screw PH BT M2 x 8 NI-ZU	5
MP46	8810008410	Screw FH BT M3 x 8 ZK	4
MP47	8810008780	Screw PH M2.6 x 8 NI	1
MP49	8850001470	Insulation flat washer (O)	5
MP50	8930034490	1528 LCD rubber	1
MP51	8930037340	1528 meter sheet	1
MP52	8930032380	Shaft tape (B)	1
MP53	8930032380	Shaft tape (B)	1
MP54	8930037690	Insulation plate DW	2
MP55	8930037700	Insulation plate DX	3
MP56	8930037710	Sheet AW	1
MP57	8930021220	Sponge (CP)	2
MP58	8930037760	Insulation plate DY	1
MP59	8850001570	Insulation flat washer (Q)	4
MP60	8850000110	Flat washer M 2 NI BS	5
MP62	8930038740	Film tape (A)	1

[DISPLAY UNIT]

REF. NO.	ORDER NO.	DESCRIPTION	QTY.
DS1	5030001150	LCD HLC8617-012210	1
MP1	8930034060	1528 reflector	1
MP2	8930034050	1528 A-LCD filter	1

ManualsPlus.com

[VR-A UNIT]

REF. NO.	ORDER NO.	DESCRIPTION	QTY.
MP1	8510009660	1528 ground plate	1

[JACK UNIT]

REF. NO.	ORDER NO.	DESCRIPTION	QTY.
J1	6450001530	Connector HLJ5815-01-4030	1
J2	6450001540	Connector HLJ5315-01-4020	1

[MIC UNIT]

REF. NO.	ORDER NO.	DESCRIPTION	QTY.
J2	6510000190	Connector FM214-8SS (P)	1

[DSP UNIT] (IC-775DSP only)

REF. NO.	ORDER NO.	DESCRIPTION	QTY.
MP1	8010015820	1534 CHASSIS	1
MP2	8930027940	1126 TR-B CLIP	1
MP3	8810008630	PH BT M3 X 6 NI-ZU	3

[MAIN UNIT]

REF. NO.	ORDER NO.	DESCRIPTION	QTY.
MP1	8510001080	Shield case (A)	1
MP2	8510001080	Shield case (A)	1
MP3	8510001101	Shield case (A) cover (A) -1	1
MP4	8510001101	Shield case (A) cover (A) -1	1
MP5	8410000910	Heat sink	1
MP6	8810002180	Screw FH M3 x 8	1
MP7	8830000100	Nut M3	1
MP8	8930014140	Ground spring (D)	1

[RF UNIT]

REF. NO.	ORDER NO.	DESCRIPTION	QTY.
MP2	8510003500	406 shield case	1
MP3	8510003500	406 shield case	1
MP4	8510003510	406 shield case cover	1
MP5	8510003510	406 shield case cover	1
MP6	8950000140	Tape 9510 W=8, L=20 mm	1

[IF UNIT]

REF. NO.	ORDER NO.	DESCRIPTION	QTY.
J3	6450000410	Connector HEC0470-01-630	1
J4	6450001130	Connector JPJ2042-01-110	1
J5	6450001490	Connector HLJ7001-01-3010	1
J6	6450000140	Connector HSJ0807-01-010	1
J7	6450000140	Connector HSJ0807-01-010	1
EP2	6910002160	BM7 shield can	1
MP1	8930011820	455 filter fitting	1
MP2	8930011820	455 filter fitting	1
MP3	8510000230	220 shield case	1
MP4	8510000241	220 shield case cover -1	1
MP5	8950000140	Tape 9510 W=8, L=20 mm	1

[PLL UNIT]

REF. NO.	ORDER NO.	DESCRIPTION	QTY.
MP1	8510000230	220 shiels case	1
MP2	8510008300	963 DDS shiels case	1

[PLL UNIT]

REF. NO.	ORDER NO.	DESCRIPTION	QTY.
MP3	8510008310	963 DDS shiels case cover	1
MP5	8510005330	Coil case	1
MP6	8510000881	194 VCO case -1	1
MP7	8510006510	194 VCO case cover (E)	1
MP8	8510005980	724 shield case	1
MP9	8510005990	724 shield case cover	1
MP10	8510008530	963 shield case	1
MP11	8510008540	963 shield case cover	1
MP12	8510005330	Coil case	1
MP13	8510008300	963 DDS shield case	1
MP14	8510008310	963 DDS shield case cover	1
MP16	8510005330	Coil case	1
MP17	8510000881	194 VCO case -1	1
MP18	8510006510	194 VCO case cover (E)	1
MP19	8510005980	724 shield case	1
MP20	8510005990	724 shield case cover	1
MP21	8510008530	963 shield case	1
MP22	8510008540	963 shield case cover	1
MP23	8510005330	Coil case	1
MP24	8510009420	1528 DDS case	1
MP25	8510005330	Coil case	1
MP26	8510009420	1528 DDS case	1
MP27	8510005330	Coil case	1
MP28	8510009420	1528 DDS case	1
MP29	8510005330	Coil case	1
MP30	8510009420	1528 DDS case	1
MP31	8510005330	Coil case	1
MP32	8510009420	1528 DDS case	1
MP33	8810003960	Setscrew A M2.6 x 5	4
MP33	8810003960	Setscrew A M2.6 x 5	4
MP34	8810003960	Setscrew A M2.6 x 5	4

[PA PARTS]

REF. NO.	ORDER NO.	DESCRIPTION	QTY.
W1	8900005400	Cable OPC-520	1
W2	8900005410	Cable OPC-521	1
W3	8900005370	Cable OPC-524 (N: 10, L: 150)	1
W4	8900005370	Cable OPC-524 (N: 10, L: 150)	1
MF1	2710000520	Fan SB0812H-ICOM-00	1
MP1	8410001990	1528 PA heat sink	1
MP2	8510009761	1528 A-PA cover -1	1
MP3	8510009401	1528 PA cover -1	1
MP4	8810008630	Screw PH BT M3 X 6 NI-ZU	4
MP5	8810008630	Screw PH BT M3 X 6 NI-ZU	6
MP6	8810008630	Screw PH BT M3 X 6 NI-ZU	8
MP7	8810008490	Setscrew H M2.6 x 8 NI	1
MP8	8810008490	Setscrew H M2.6 x 8 NI	1
MP9	8810008490	Setscrew H M2.6 x 8 NI	1
MP10	8810008490	Setscrew H M2.6 x 8 NI	1
MP11	8810008490	Setscrew H M2.6 x 8 NI	1
MP12	8810008490	Setscrew H M2.6 x 8 NI	1
MP13	8810008490	Setscrew H M2.6 x 8 NI	1
MP15	8810005220	Cap bolt M4 x10 ZK	4
MP17	8930037770	Sheet AY	1
MP18	8950001290	Tape 9510 W=9, L=50 mm	1
MP19	8950000470	Tape 9510 W=9, L=30 mm	1

[PA UNIT]

REF. NO.	ORDER NO.	DESCRIPTION	QTY.
MP1	8860000100	Ground lug B 2 (M2.6) AG BS	1
MP2	8860000100	Ground lug B 2 (M2.6) AG BS	1
MP3	8860000100	Ground lug B 2 (M2.6) AG BS	1
MP4	8860000100	Ground lug B 2 (M2.6) AG BS	1
MP5	8860000100	Ground lug B 2 (M2.6) AG BS	1

ManualsPlus.com

[TUNER PARTS]

REF. NO.	ORDER NO.	DESCRIPTION	QTY.
J1	6510000410	Connector MR-DS-E 02	1
J2	6510000410	Connector MR-DS-E 02	1
W1	8900005350	Cable OPC-523 (N: 10, L: 100)	1
EP1	8930030420	Cover FG60B	1
MF1	2710000460	Stepper motor MP28GA	1
MF2	2710000460	Stepper motor MP28GA	1
MF3	2710000470	Fan MF60B-12H901	1
MP1	8950003200	Coupler UJ6-5	2
MP2	8810008710	Screw PH BT M4 x 25 NI-ZU	4
MP3	8930030111	1414 plate -1	2
MP4	8010015800	1528 TUNER chassis	1
MP5	8510009410	1528 TUNER cover	1
MP7	8930034160	1528 TUNER M-plate	1
MP8	8930012461	Connector bush -1	1
MP9	8810008630	Screw PH BT M3 x 6 NI-ZU	4
MP10	8810008630	Screw PH BT M3 x 6 NI-ZU	6
MP11	8810008630	Screw PH BT M3 x 6 NI-ZU	5
MP12	8810008630	Screw PH BT M3 x 6 NI-ZU	1
MP13	8810007410	Screw PH M3 x 6 NI	4
MP14	8820000880	1528 screw	4
MP15	8810003160	Setscrew A M3 x 6	4
MP16	8950000180	Cable tie -80	1

[CTRL UNIT]

REF. NO.	ORDER NO.	DESCRIPTION	QTY.
MP1	6910008240	Clip 59TN4772	4
MP2	8510005420	661 shield case	1
MP3	8510005411	661 shield case cover -1	1
MP4	8510004150	DC-DC shield case	1

[RELAY UNIT]

REF. NO.	ORDER NO.	DESCRIPTION	QTY.
MP1	8930034150	1528 TUNER V-plate	1
MP2	8810003160	Setscrew A M3 x 6	4
MP3	8810003160	Setscrew A M3 x 6	1

[REG UNIT]

REF. NO.	ORDER NO.	DESCRIPTION	QTY.
FI1	2040000220	Filter 10DEEG3M	1
F1	5220000240	Fuse holder	1
F2	5220000270	Fuse holder	1
F3	5210000430	Fuse FGMB 125V 12A (120–120 V versions)	1
	5210000410	Fuse S505-N5A-T (220–240 V versions)	1
S1	2230000950	Switch ESB99887V [POWER]	1
W1	8900005790	Cable OPC-570	1
EP1	6910008580	Power board RPS-3701	1
EP2	6910008330	Fan guard G80-18	1
MF1	2710000520	Fan SB0812H-ICOM-00	1
MP1	8010015790	1528 REG chassis	1
MP2	8510009391	1528 T-cover -1	1
MP3	8930034130	1528 SW angle	1
MP4	8930034142	1528 SW shaft -2	1
MP5	8810008630	Screw PH BT M3 x 6 NI-ZU	16
MP6	8810008630	Screw PH BT M3 x 6 NI-ZU	5
MP7	8810008630	Screw PH BT M3 x 6 NI-ZU	1
MP8	8810008630	Screw PH BT M3 x 6 NI-ZU	1
MP9	8810008410	Screw FH BT M3 x 8 ZK	2
MP10	8810005220	Cap bolt M4 X10 ZK	4

[REG UNIT]

REF. NO.	ORDER NO.	DESCRIPTION	QTY.
MP11	8810008450	Screw BiH M4 x 8 ZK	1
MP12	8850000580	Star washer M4	1
MP13	8810000230	Screw PH M3 x 6	2
MP14	8310030970	868 ground seal (O)	1
MP15	8950000180	Cable tie -80	2
MP17	8850001540	Insulation flat washer (P)	1
MP18	8930037710	Sheet AW	1

[UNPACKING]

REF. NO.	ORDER NO.	DESCRIPTION	QTY.
F1	5210000430	Spare fuse FGMB 125V 12A (100–120 V versions)	2
	5210000410	Spare fuse S505-N5A-T (220–240 V versions)	2
F2	5210000040	Spare fuse FGB 2A (100–120 V versions)	2
	5210000360	Spare fuse S506-T-250V-2A (220–240 V versions)	2
J1	5610000010	External speaker plug AP301	1
J2	6510013440	Pin plug TP-M60	2
P1	5610000050	CW keyer plug AP330	1
P2	5610000020	Mini DC power plug AP313 3.5ϕ	1
W1	8900005130	AC power cable OPC-492 (220–240 V versions)	1
	8900005250	AC power cable OPC-510 (100–120 V versions)	1

Screw abbreviations

BT: Self-tapping PH: Pan head
FH: Flat head BiH: Bind head
NI: Nickel NI-ZU: Nickel-zinc
BS: Brass ZK: Black

ManualsPlus.com

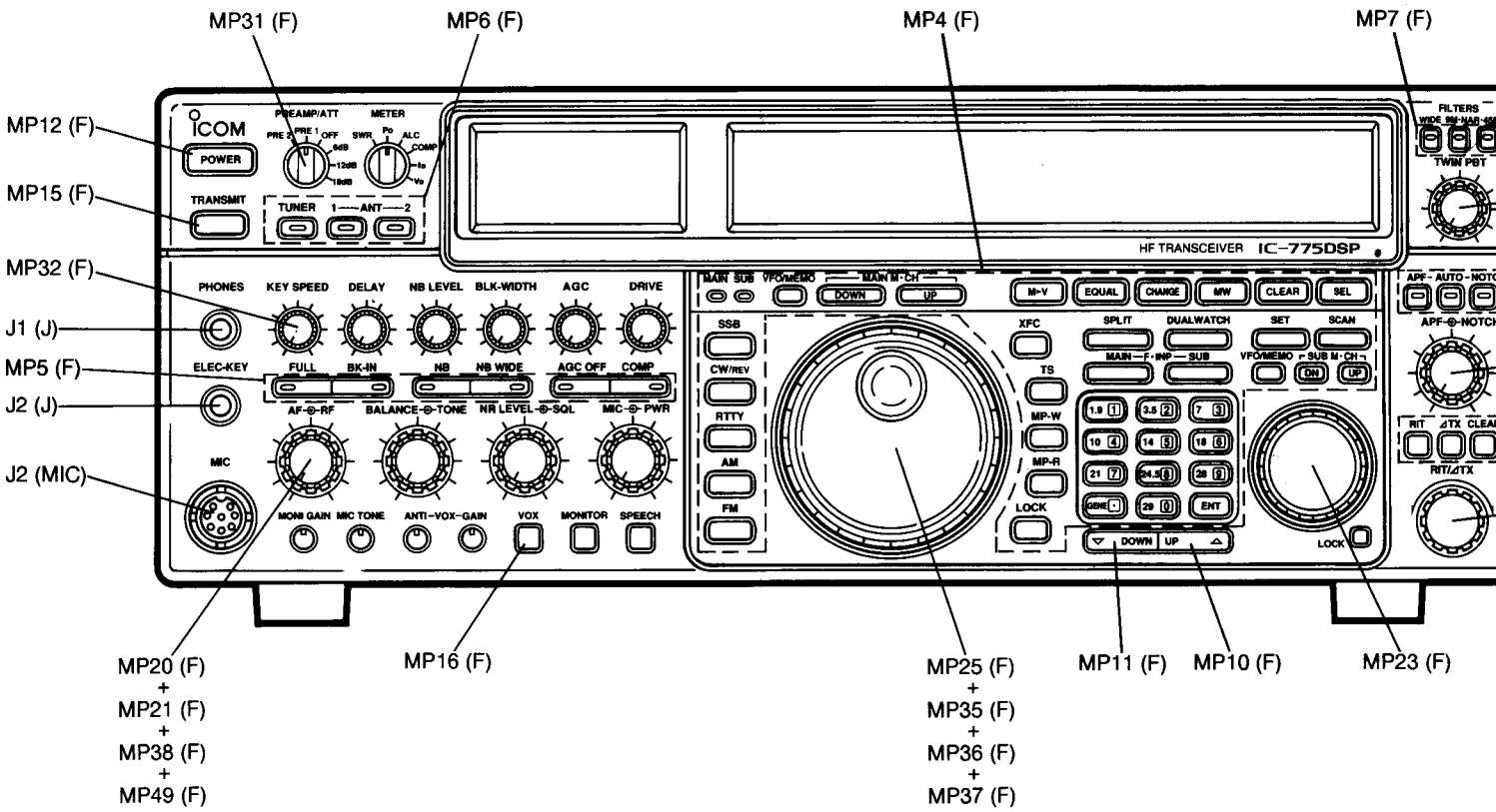

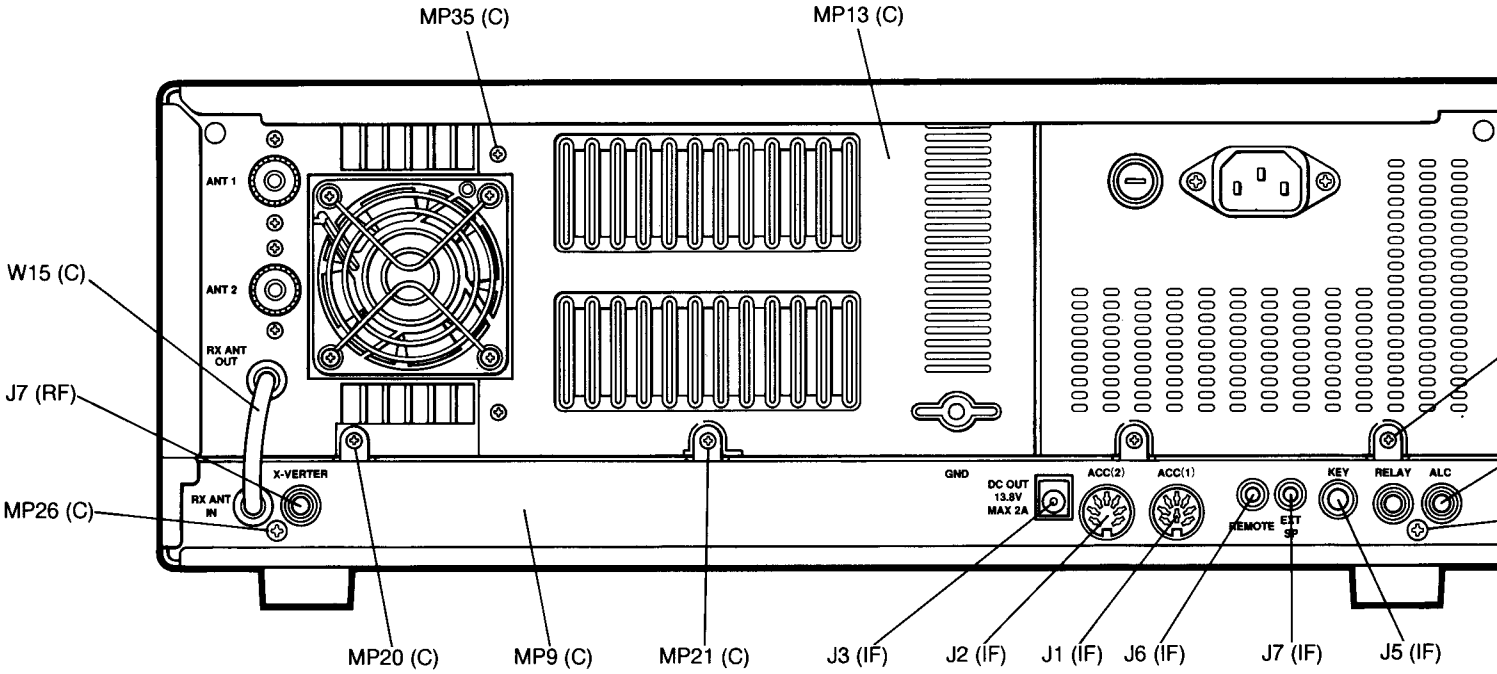

Unit abbreviations (C): CHASSIS PARTS (F): FRONT PARTS (J): JACK UNIT (MIC): MIC UNIT
(RF): RF UNIT (IF): IF UNIT

ManualsPlus.com

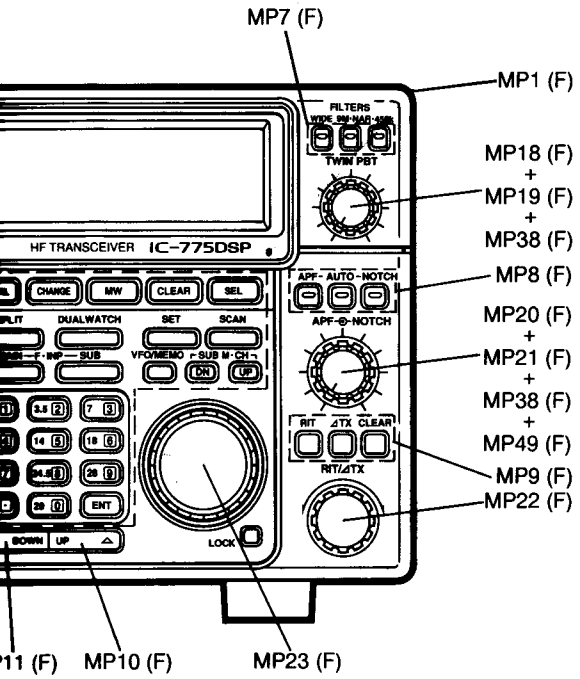

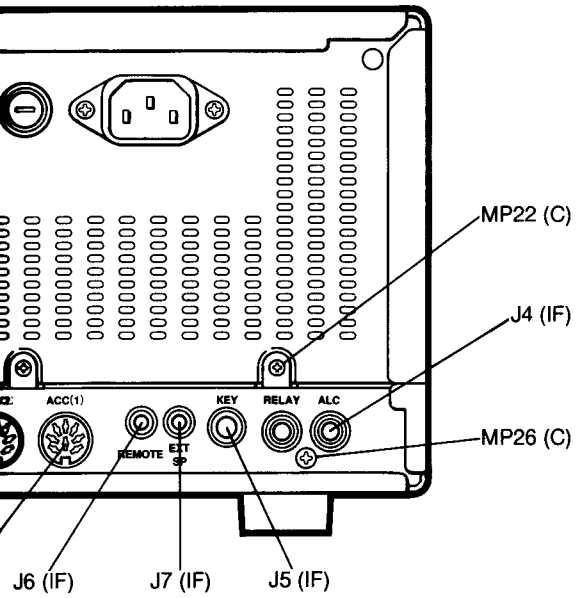

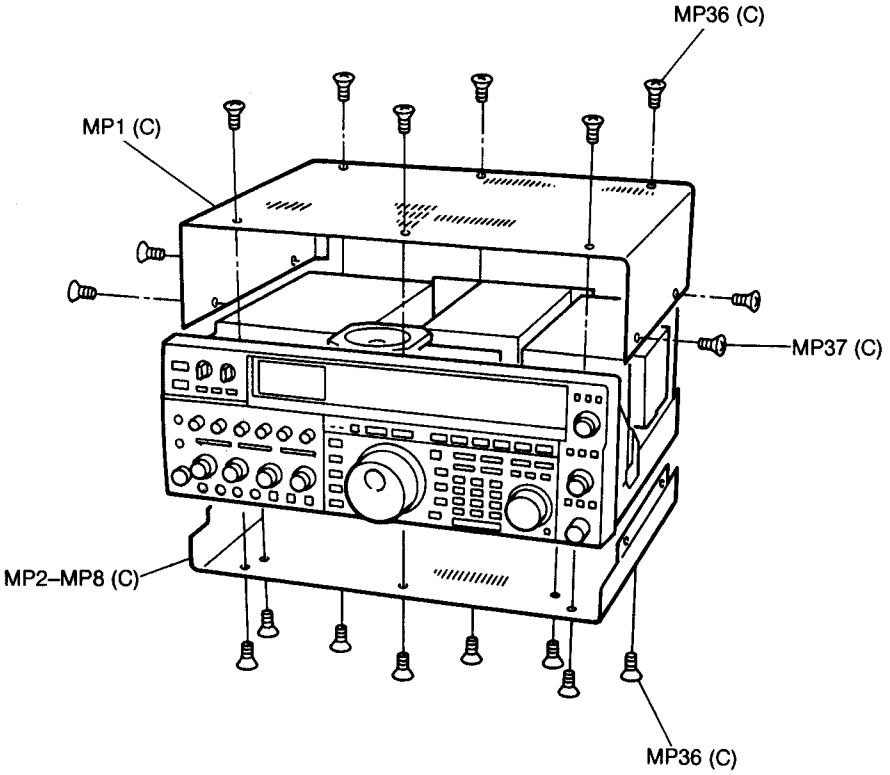

ManualsPlus.com

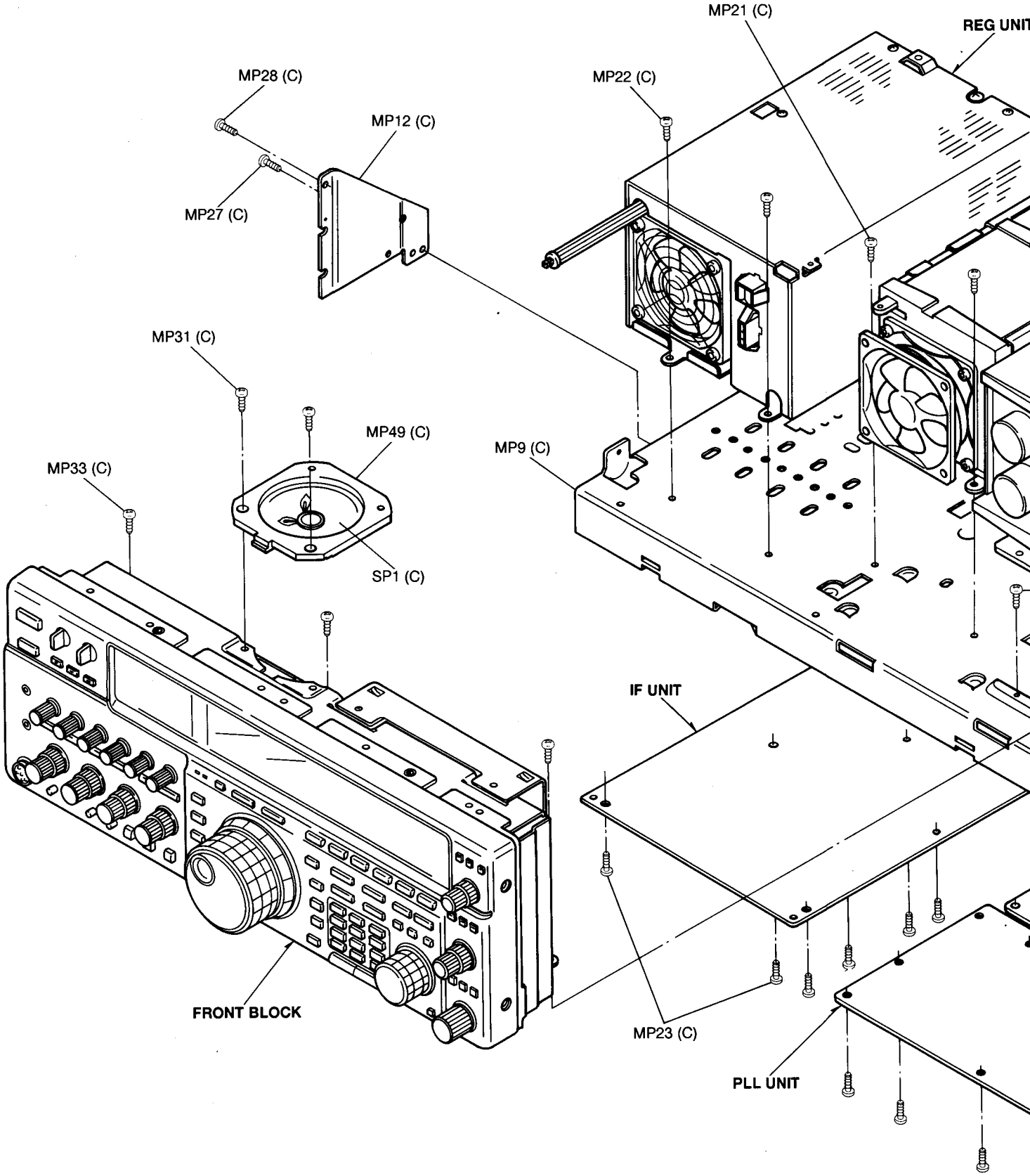

Unit abbreviations (C): CHASSIS PARTS

ManualsPlus.com

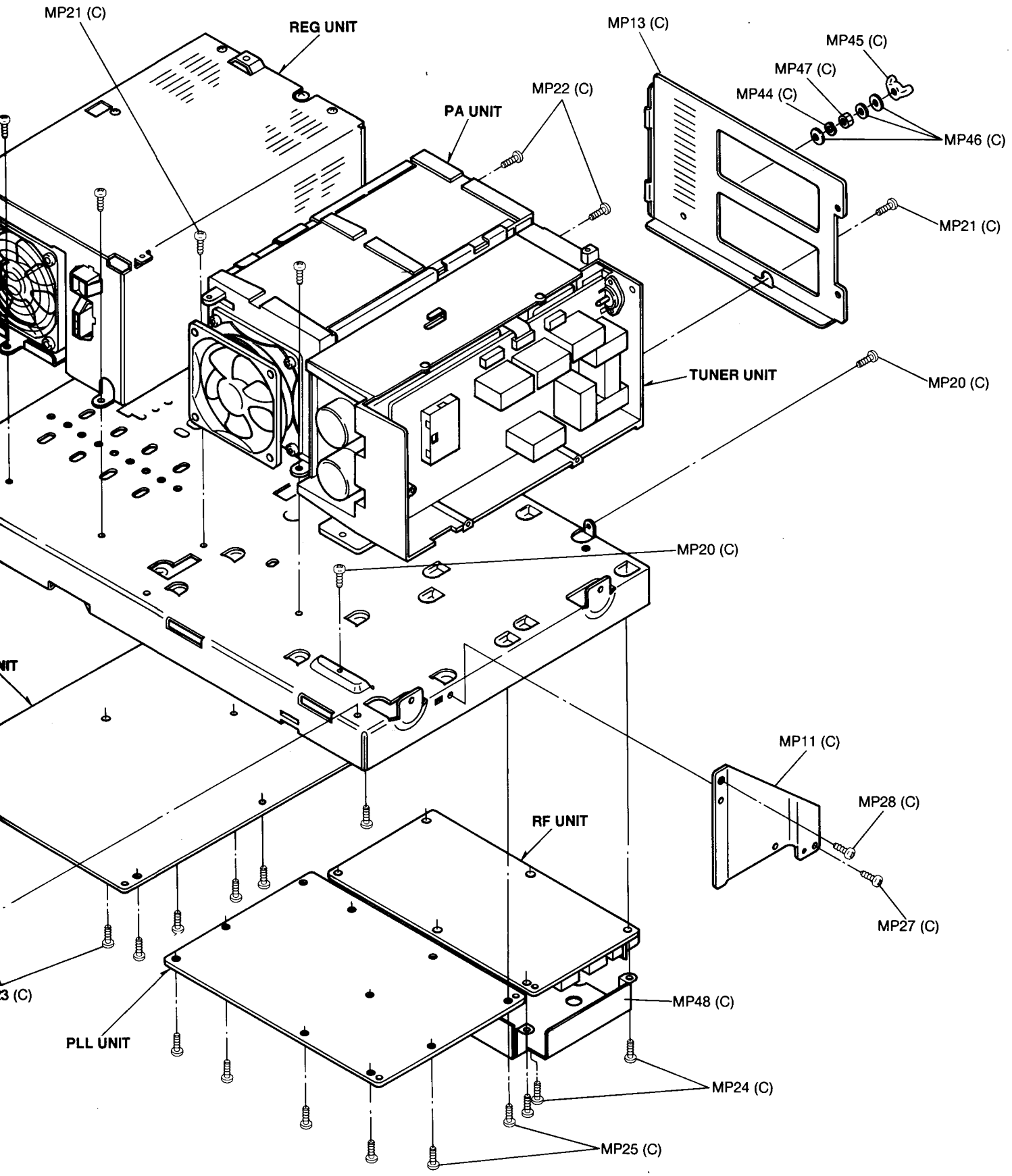

ManualsPlus.com

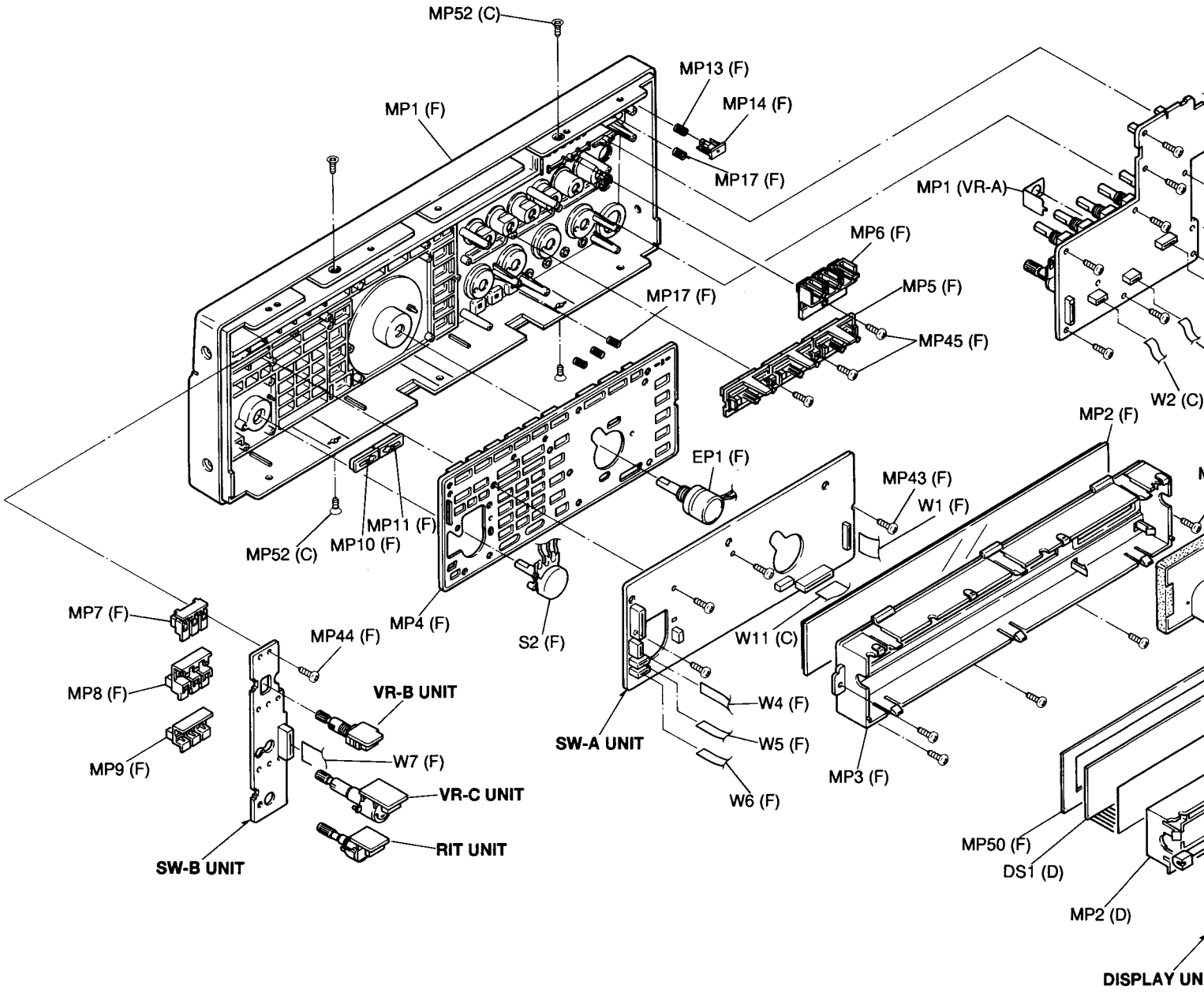

Unit abbreviations (C): CHASSIS PARTS (F): FRONT PARTS (D): DISPLAY UNIT (VR-A): VR-A UNIT
(M): MAIN UNIT (DSP): DSP UNIT

ManualsPlus.com

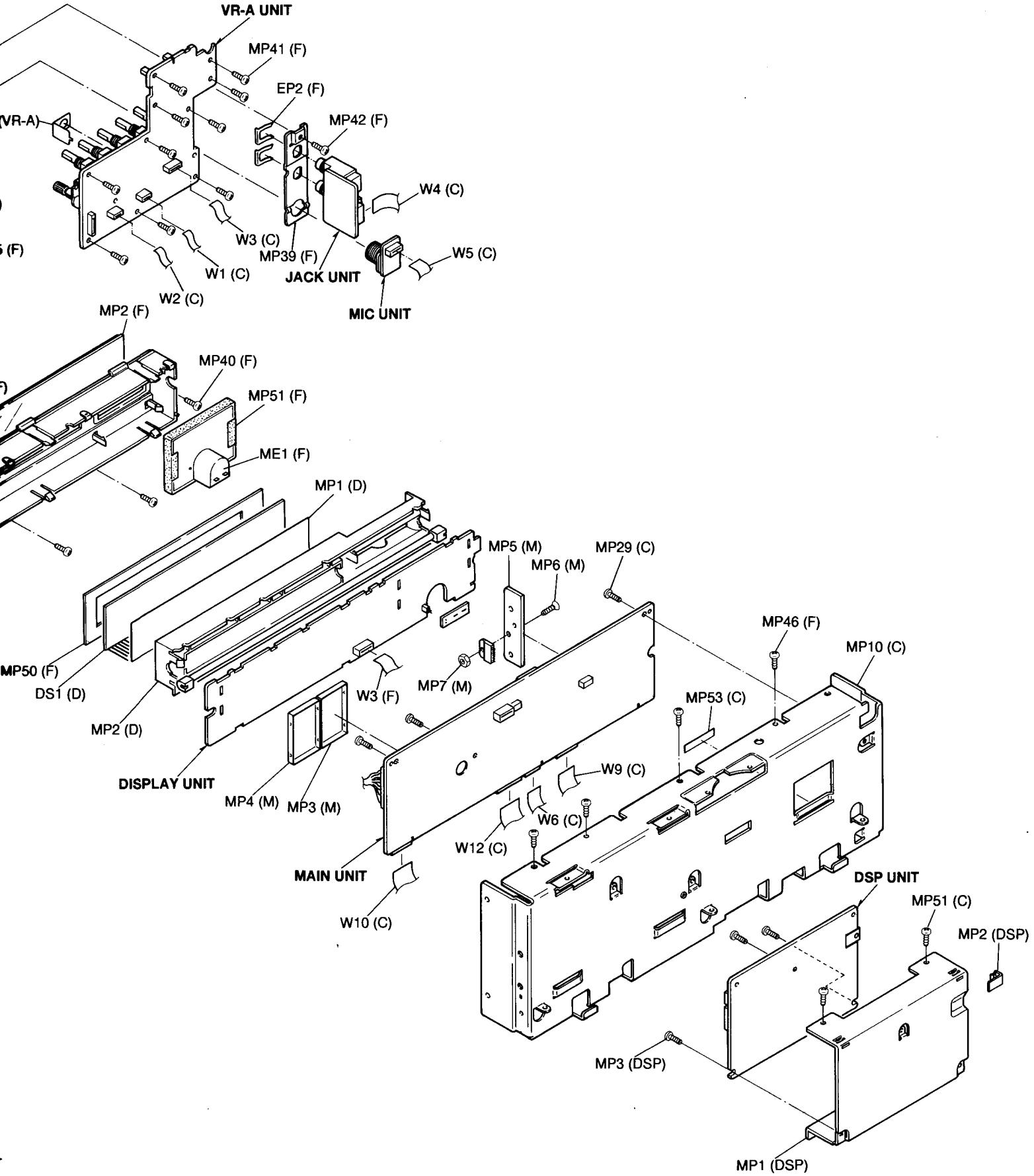

ManualsPlus.com

REG UNIT

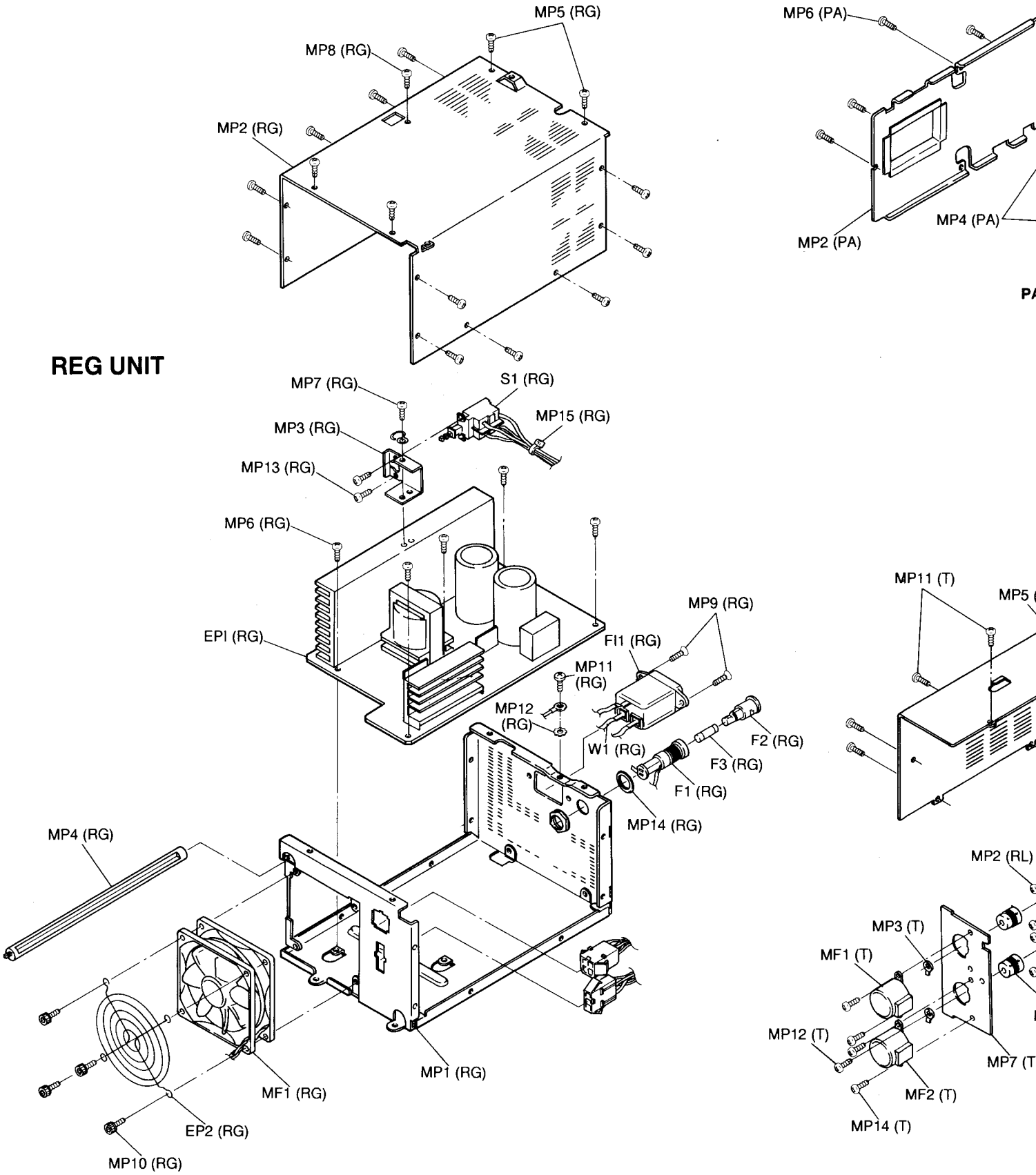

Unit abbreviations (RG): REG UNIT (PA): PA PARTS (T): TUNER PARTS (CT): CTRL UNIT (RL): RELAY UNIT

ManualsPlus.com

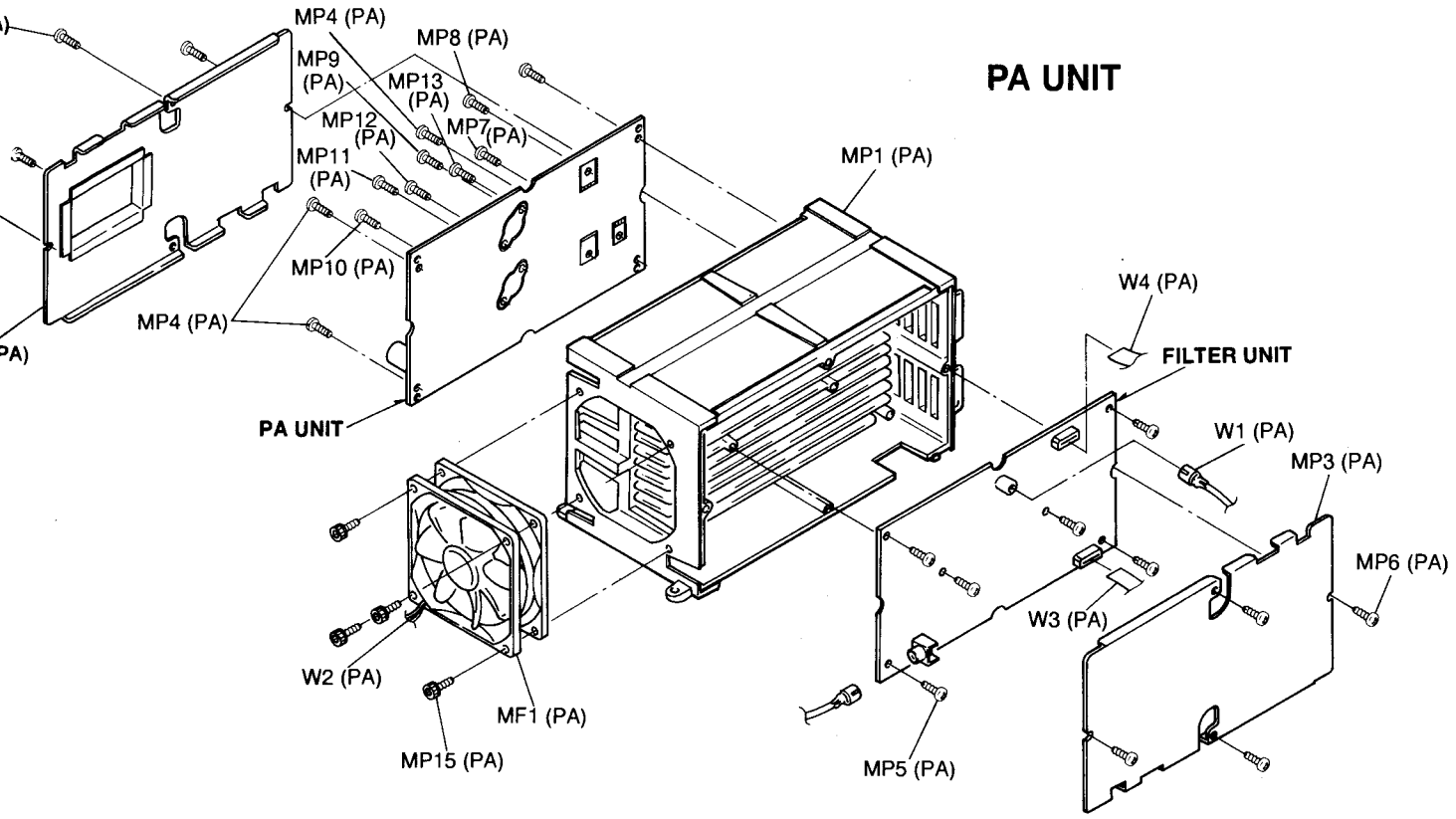

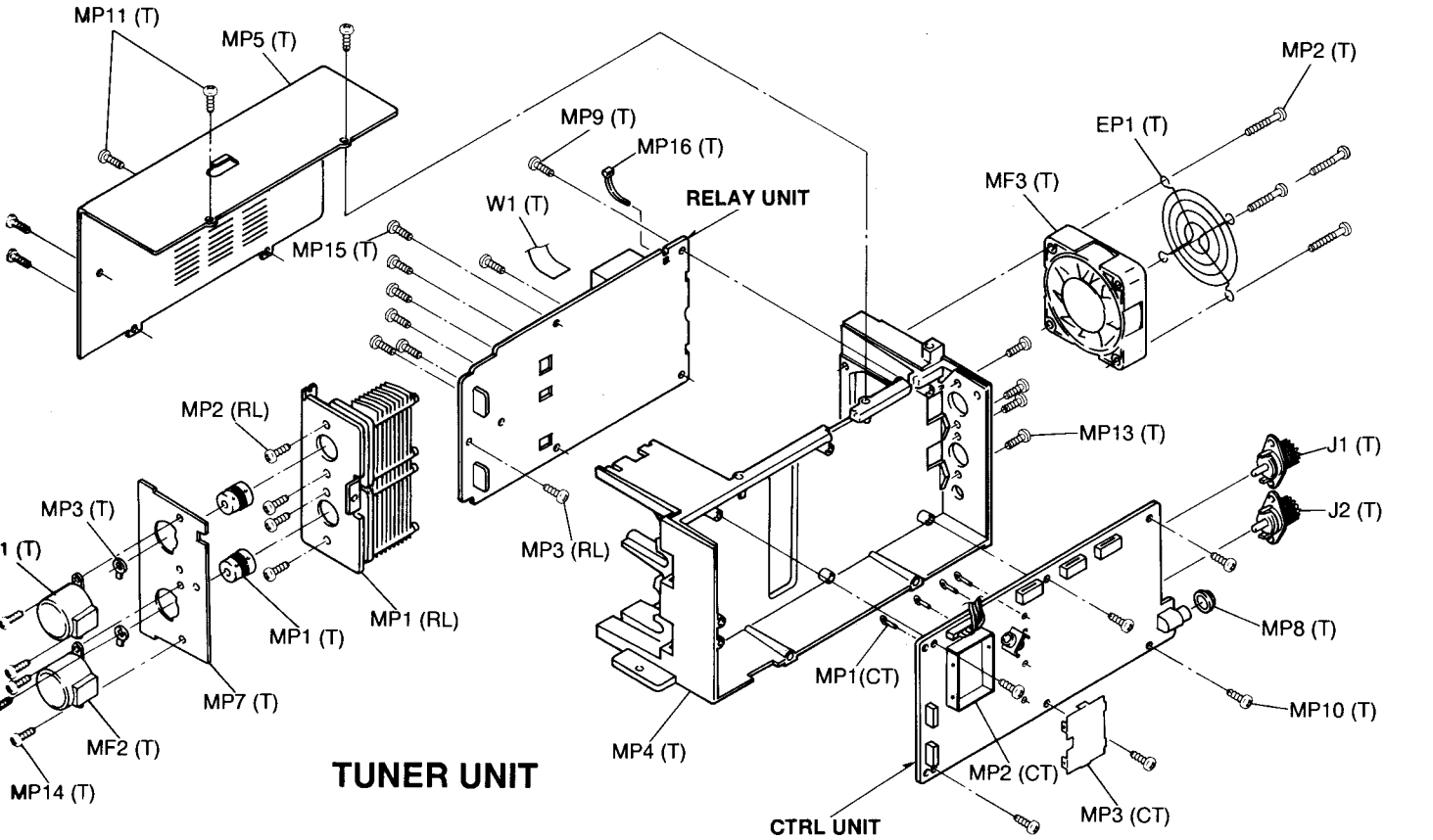

LAY UNIT

ManualsPlus.com

SECTION 8 SEMI-CONDUCTOR INFORMATION

• TRANSISTOR AND FET'S

2SA1576 R (Symbol: FR)	**2SA1586 GR / Y** (Symbol: SG / SY)	**2SB1119S** (Symbol: 88)	**2SB1123S** (Symbol: BF)
2SB909M E C B	**2SC3647S** (Symbol: CC)	**2SC4081 R** (Symbol: BR)	**2SC4116 BL / GR / Y** (Symbol: LL / LG / LY)
2SC4213 B (Symbol: AB)	**2SC4215 O** (Symbol: QO)	**2SC4403 3** (Symbol: LY3)	**2SC4673D** (Symbol: CO)
2SC1619 (Symbol: TF)	**2SD1623** (Symbol: DF)	**2SD1801S** (Symbol: CE)	**2SD1817** (Symbol: 1K)
2SJ144 GR (Symbol: VG) S G D	**2SK210 GR** (Symbol: YG) D S G	**2SK2171** (No symbol) S D G G	**2SK408** G D S G S D
2SK409 D G S D S G	**2SK515 T1B (X33)** (Symbol: X33) S G D	**2SK619** D G S D S G	**2SK880 Y** (Symbol: XY) S G D

ManualsPlus.com

2SK882 GR (Symbol: TG) 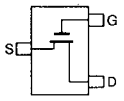	**3SK131** (Symbol: V11) 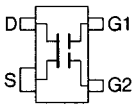	**DTA114EU** (Symbol: 14) 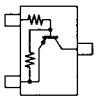	**DTC114EU** (Symbol: 24) 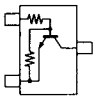
DTC144EU (Symbol: 26) 	**DTC144TU** (Symbol: 06) 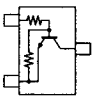	**MRF140MP** 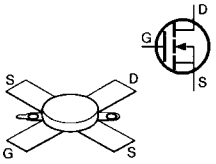	**RN1202** 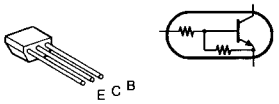

• DIODES

1SS184 (Symbol: B3) 	**1SS300** (Symbol: A3) 	**1SS301** (Symbol: B3) 	**1SS302** (Symbol: C3)
1SS312 (Symbol: BF) 	**1SS319** (Symbol: A4) 	**1SV263** (Symbol: JV) 	**1SV265** (No symbol)
DAN202U (Symbol: N) 	**DAP202U** (Symbol: P) 	**HSM88AS** (Symbol: C1) 	**HSM88ASR** (Symbol: C3)
MA862 (Symbol: M1l) 	**ND411G-2** (Symbol: 411) 	**RD13M T2B1** (Symbol: 31) 	**RD5.1M B2** (Symbol: 512)
RD6.2M B2 (Symbol: 622) 	**SVC252** (Symbol: HV) 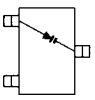		

ManualsPlus.com

SECTION 9 BOARD LAYOUTS

9-1 DSP UNIT (IC-775DSP only)

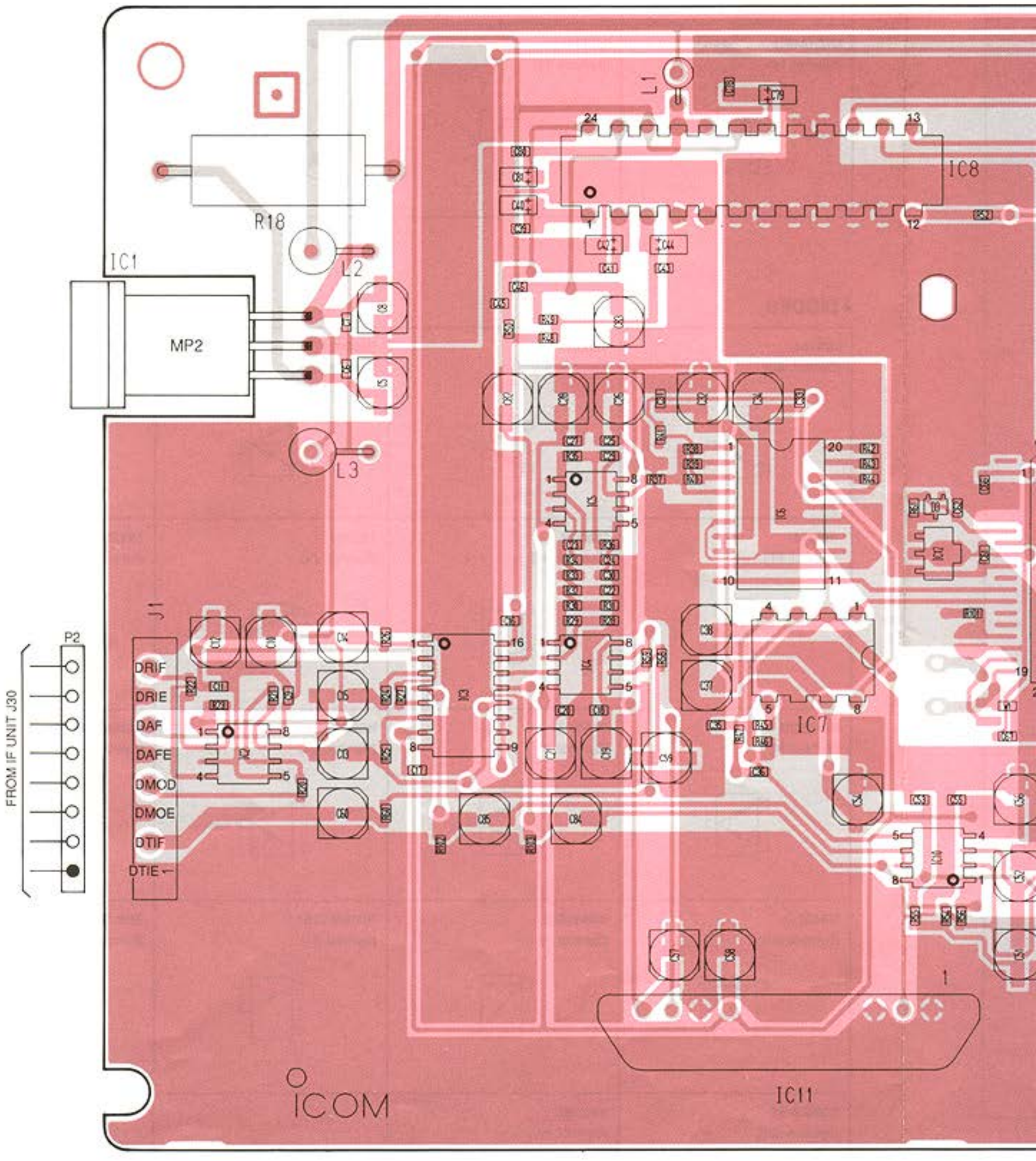

ManualsPlus.com

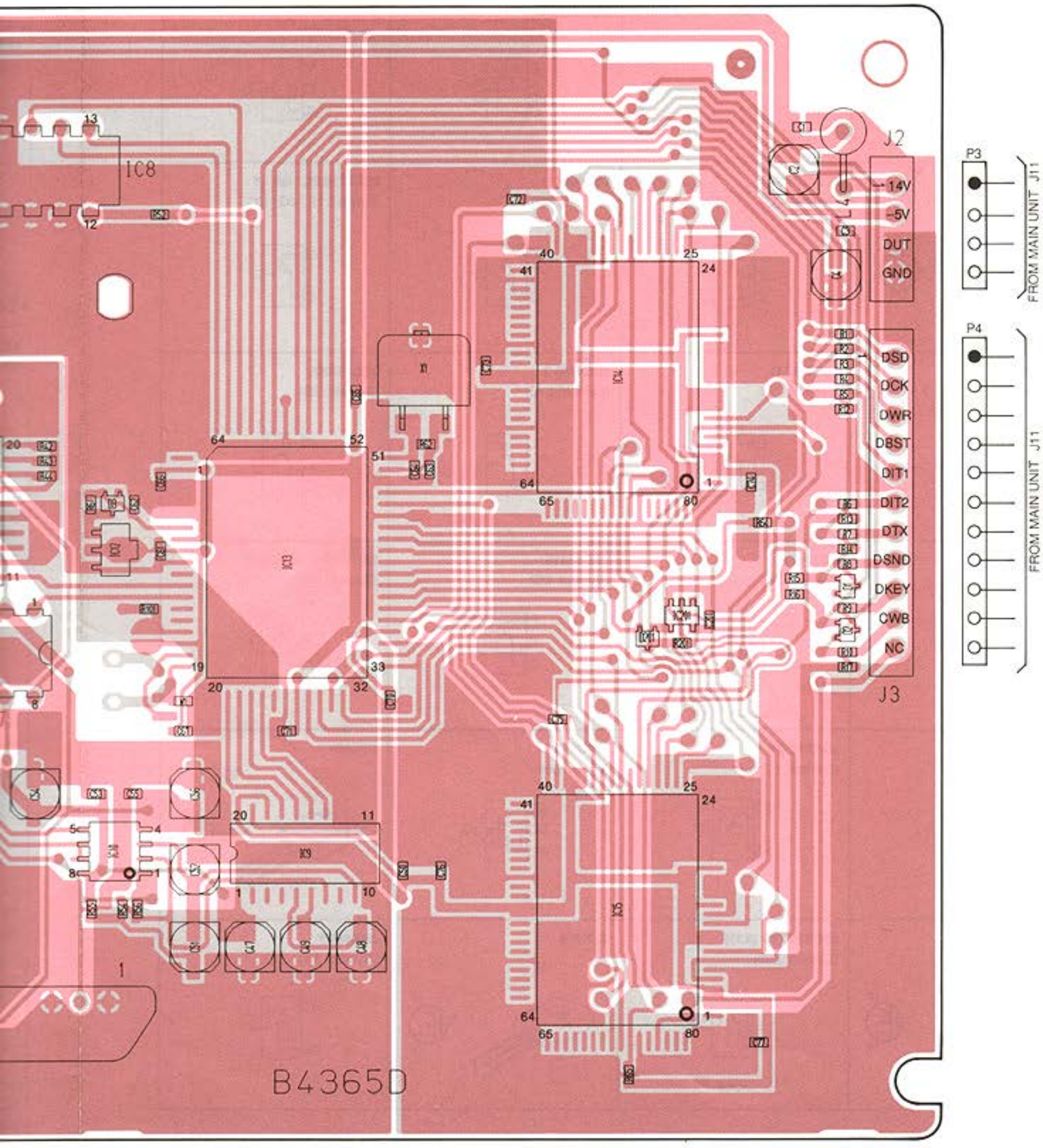

ManualsPlus.com

9-2 SW-A UNIT

● SW-A UNIT

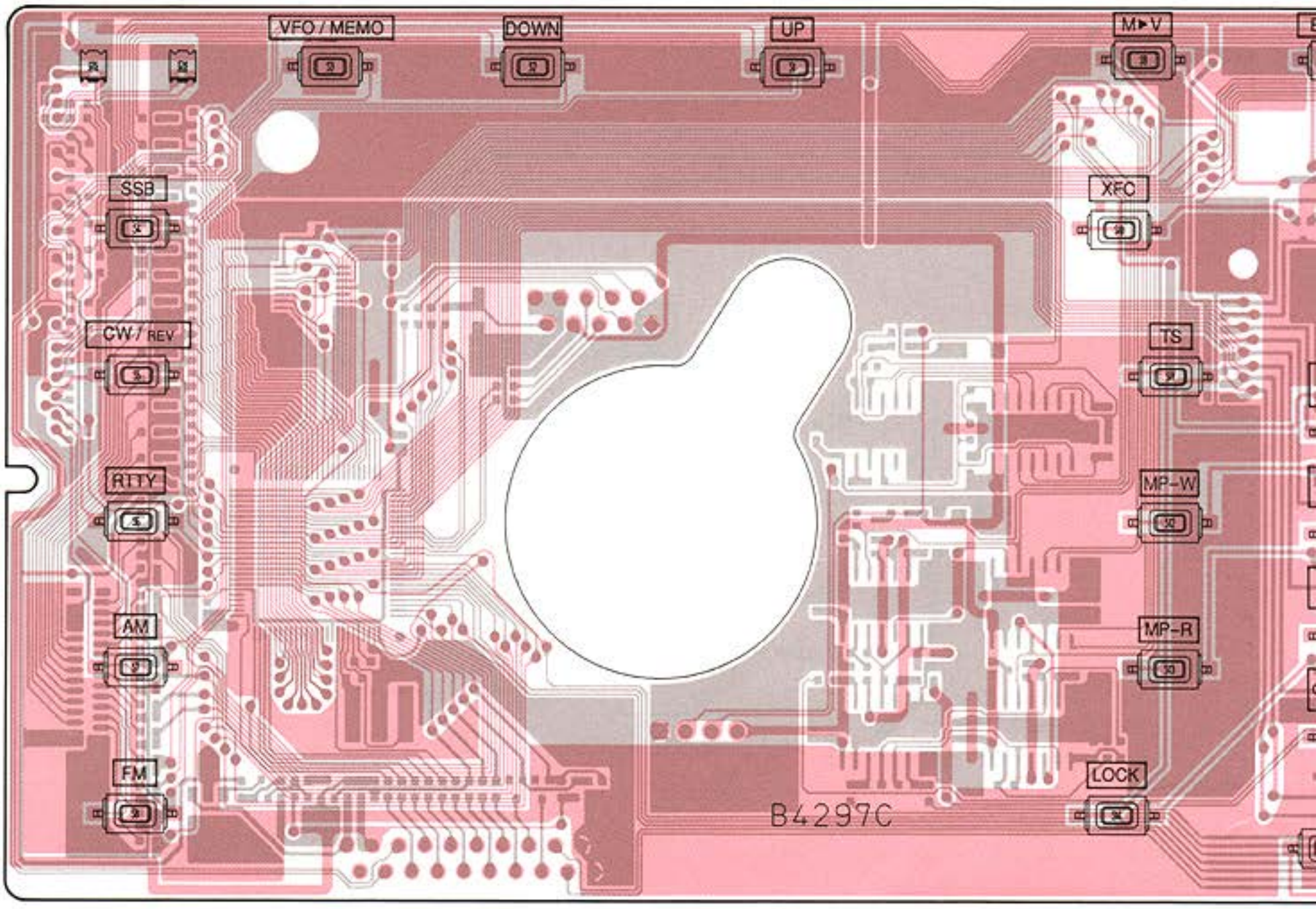

● JACK UNIT

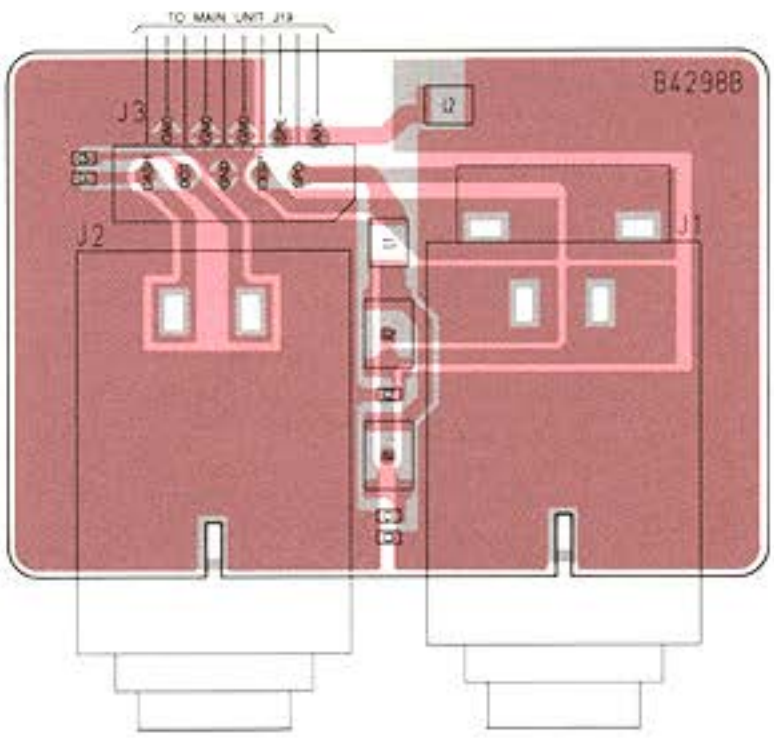

ManualsPlus.com

The combination of this page and the next page show the unit layout in the same configuration as the actual P. C. Board.

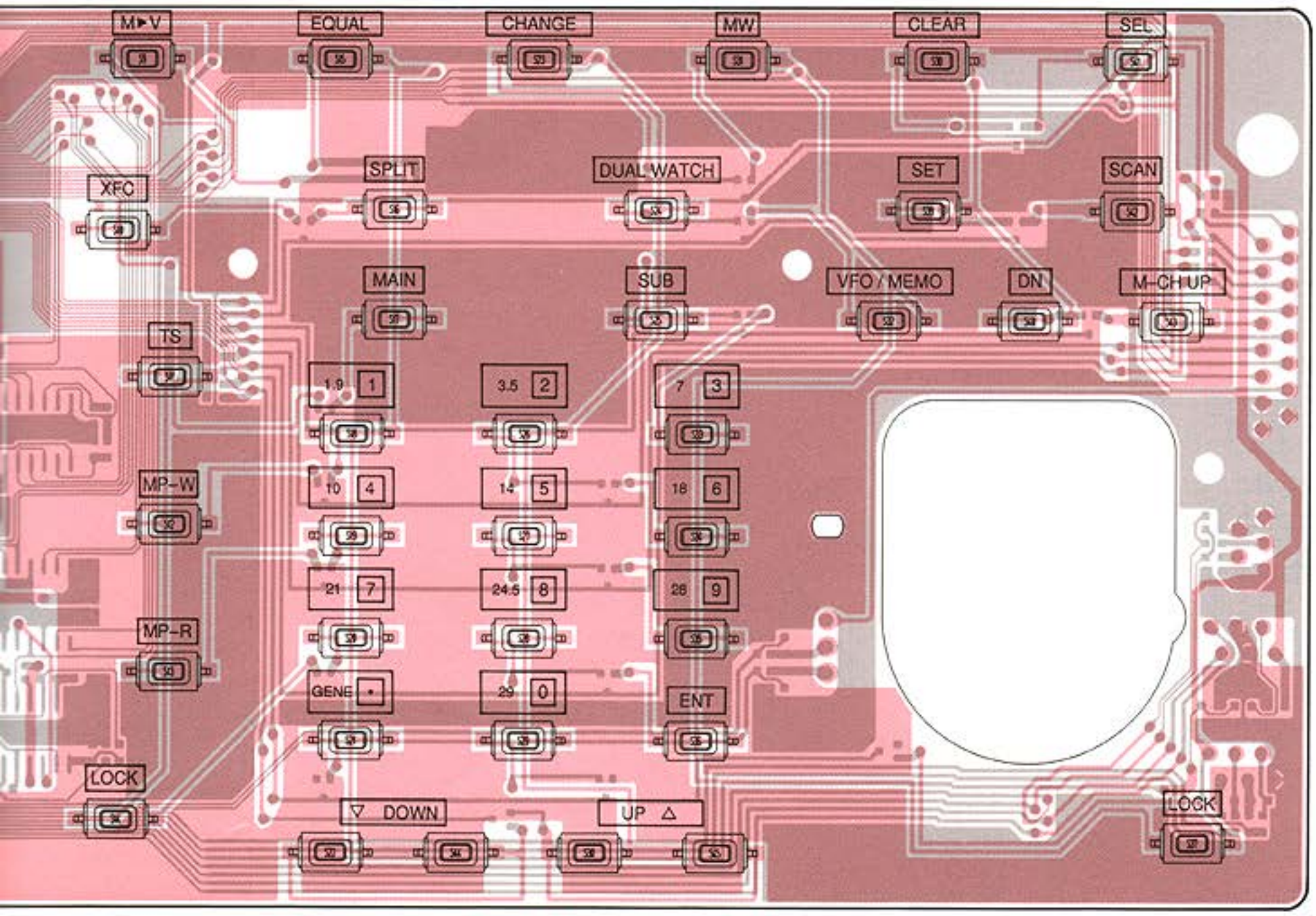

● **MIC UNIT**

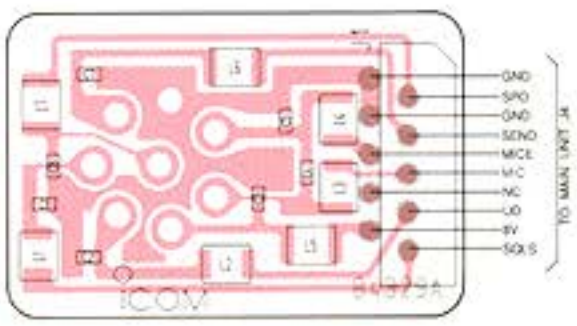

ManualsPlus.com

● **SW-A UNIT**

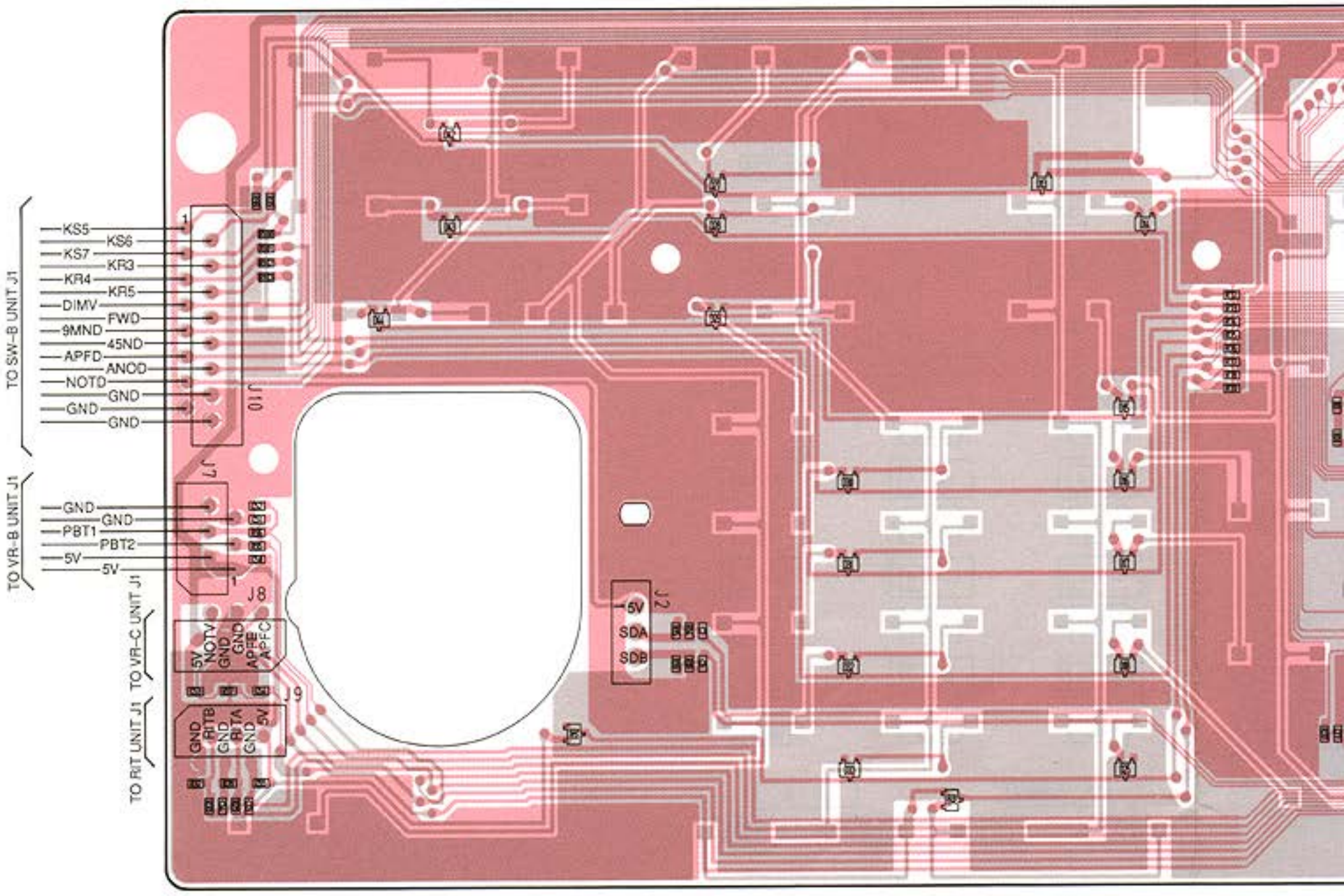

ManualsPlus.com

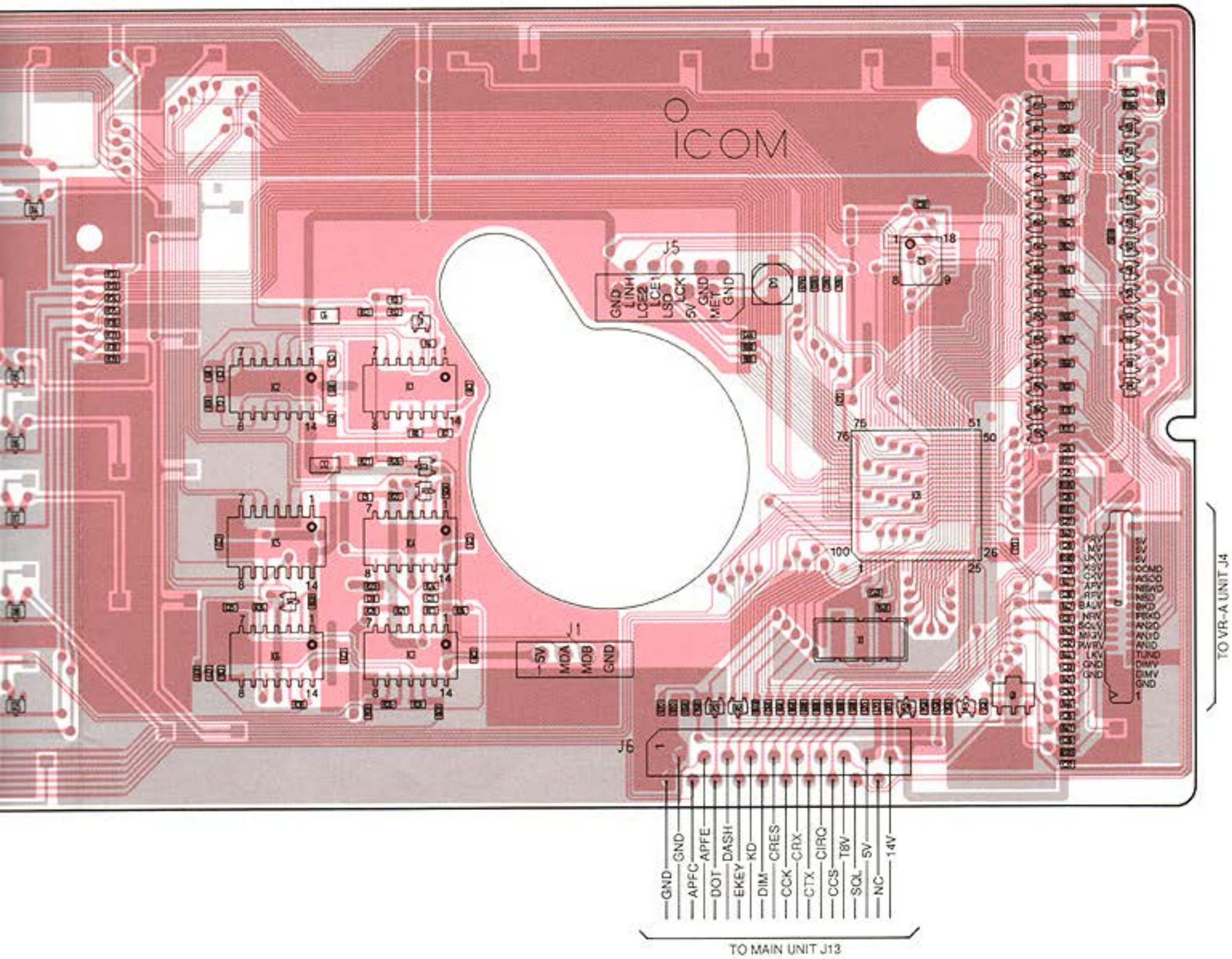

ManualsPlus.com

9-3 SW-B AND DISPLAY UNITS

● SW-B UNIT

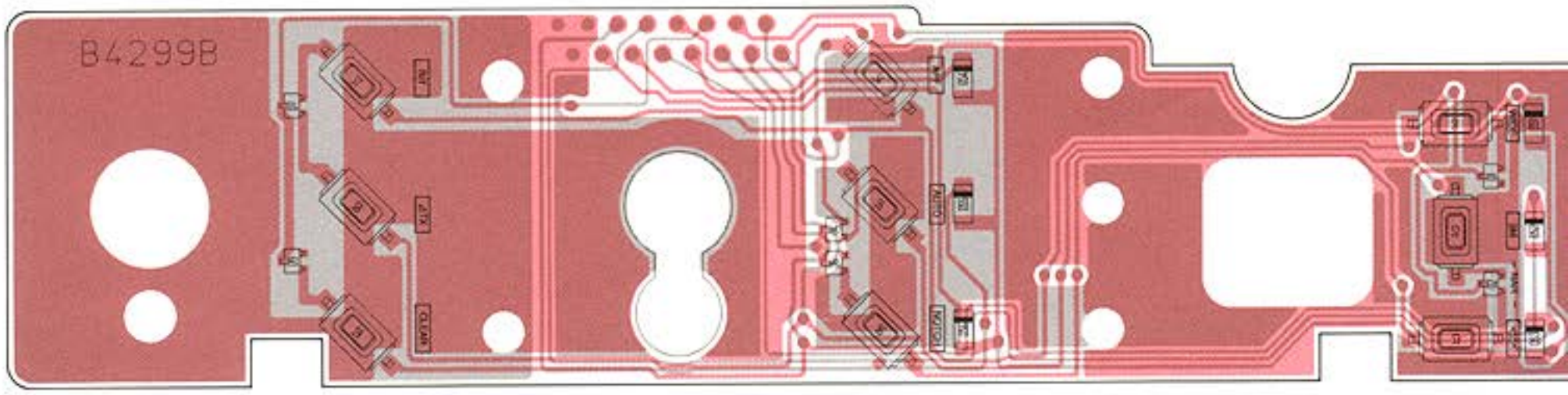

● DISPLAY UNIT

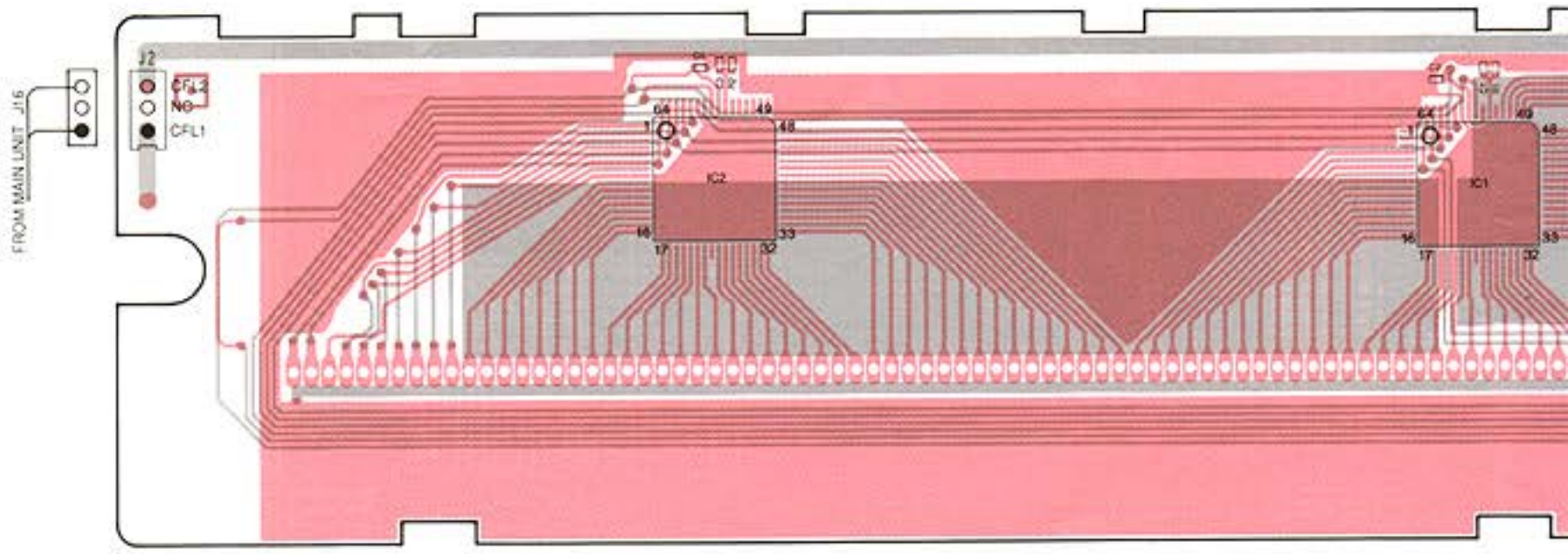

ManualsPlus.com

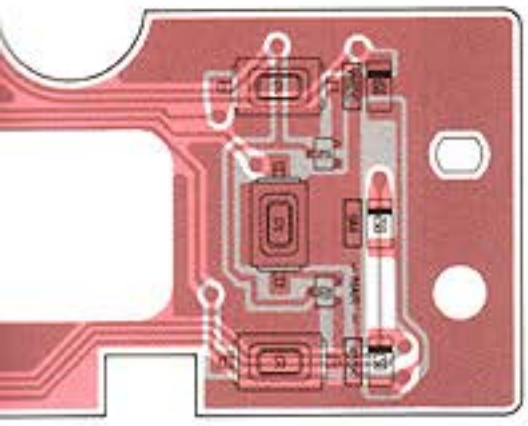

● VR-B UNIT

● VR-C UNIT

● RIT UNIT

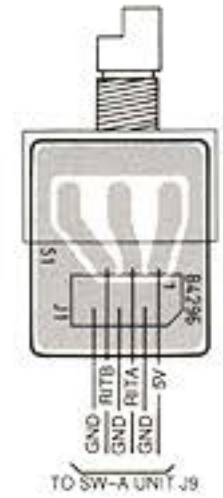

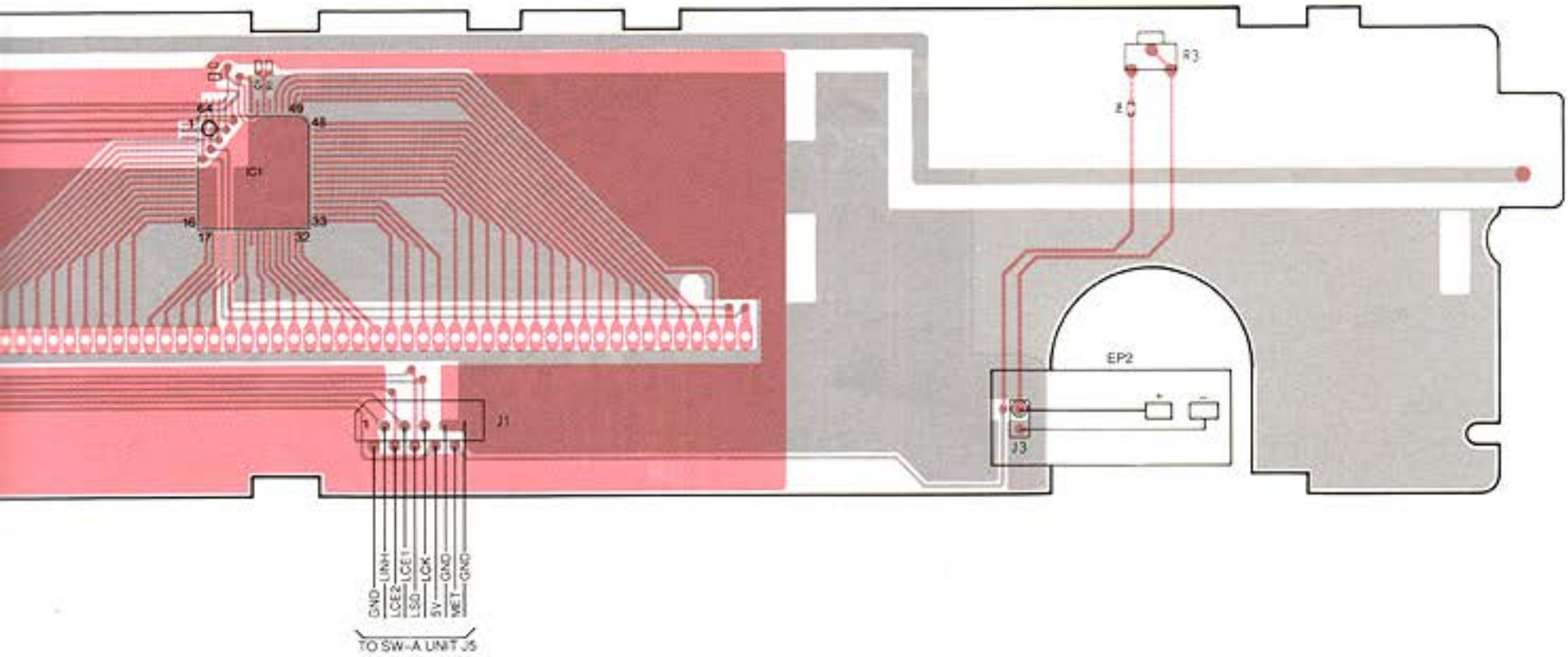

ManualsPlus.com

9-4 VR-A UNIT

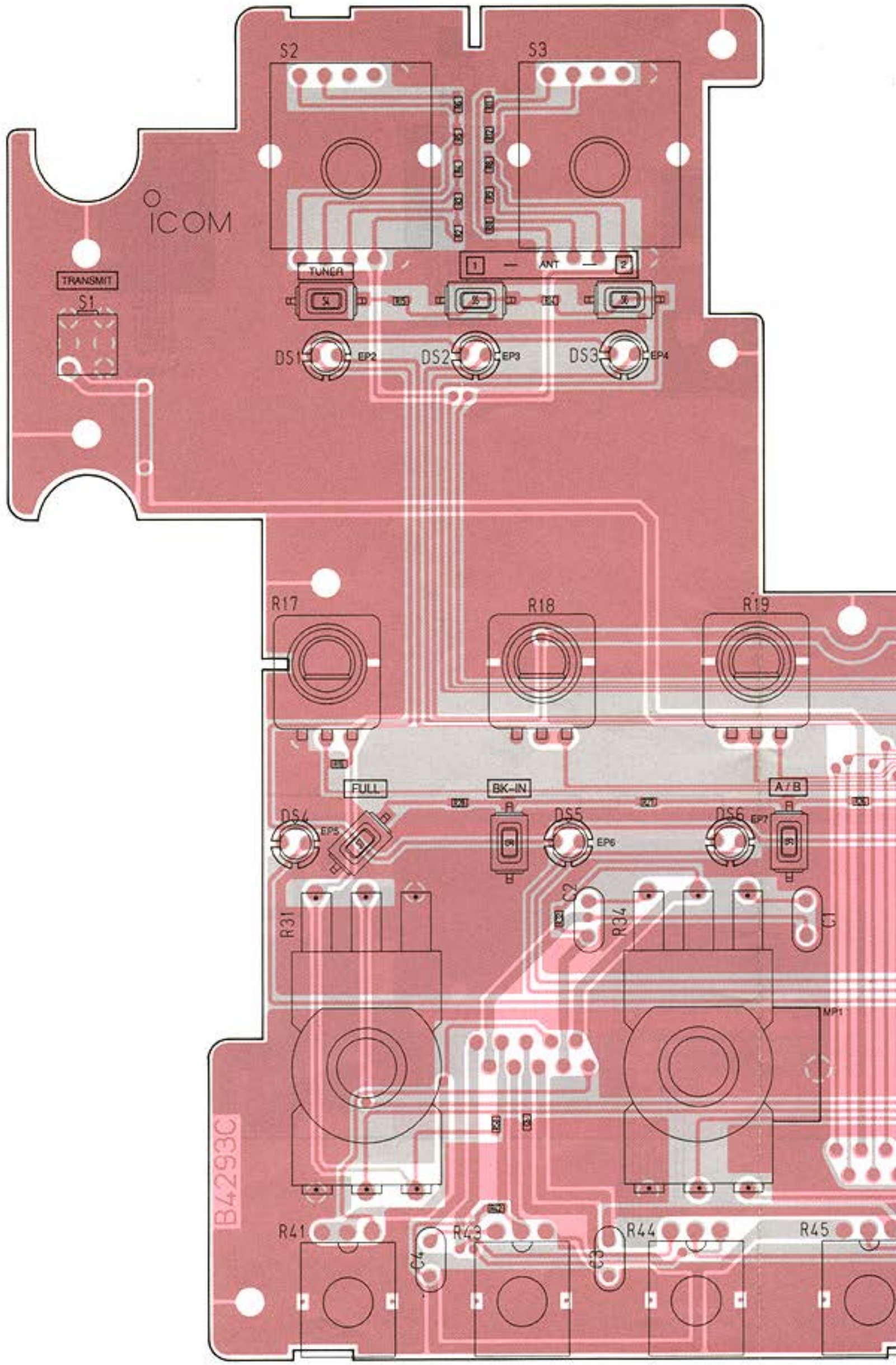

ManualsPlus.com

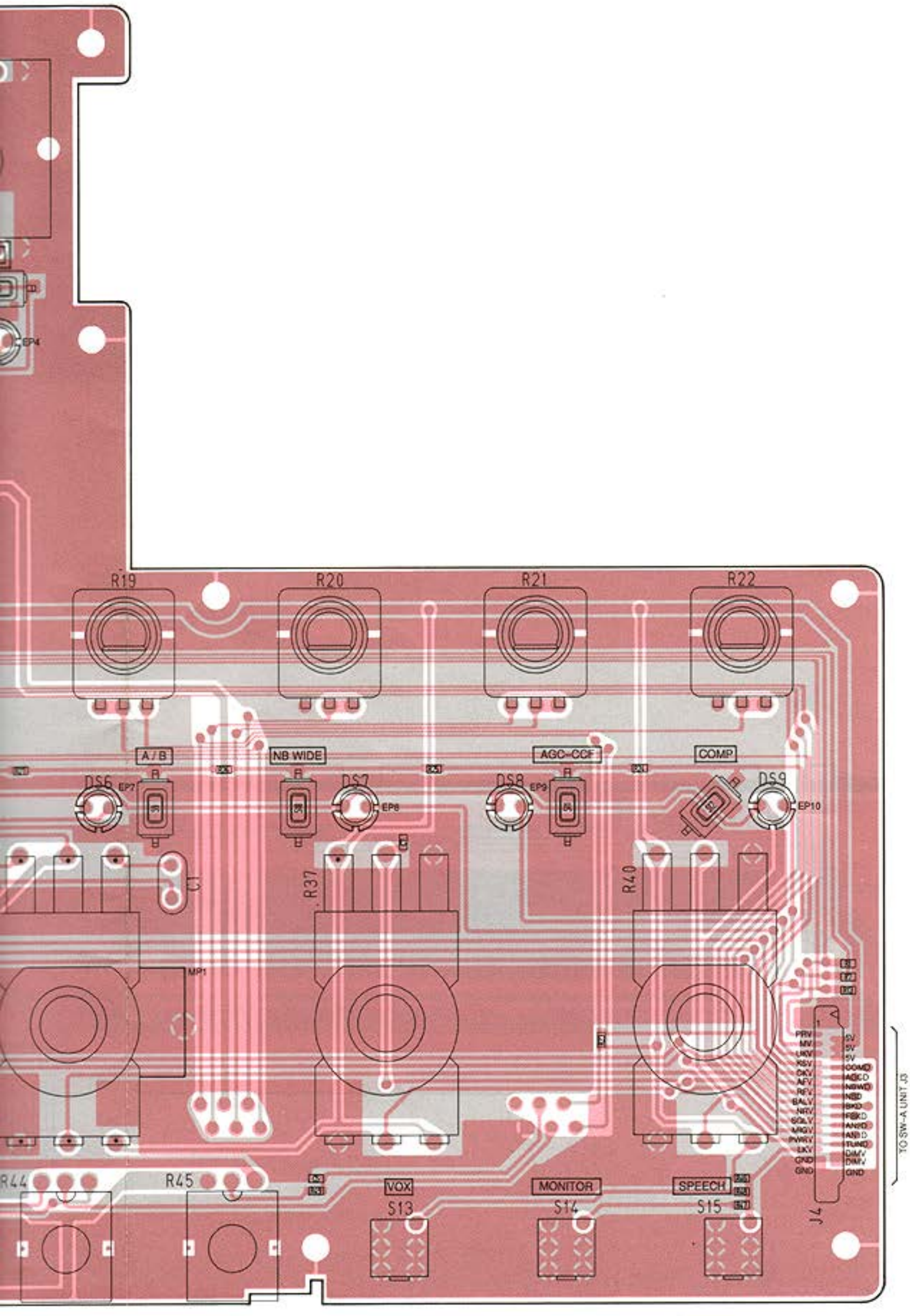

ManualsPlus.com

9-5 MAIN UNIT

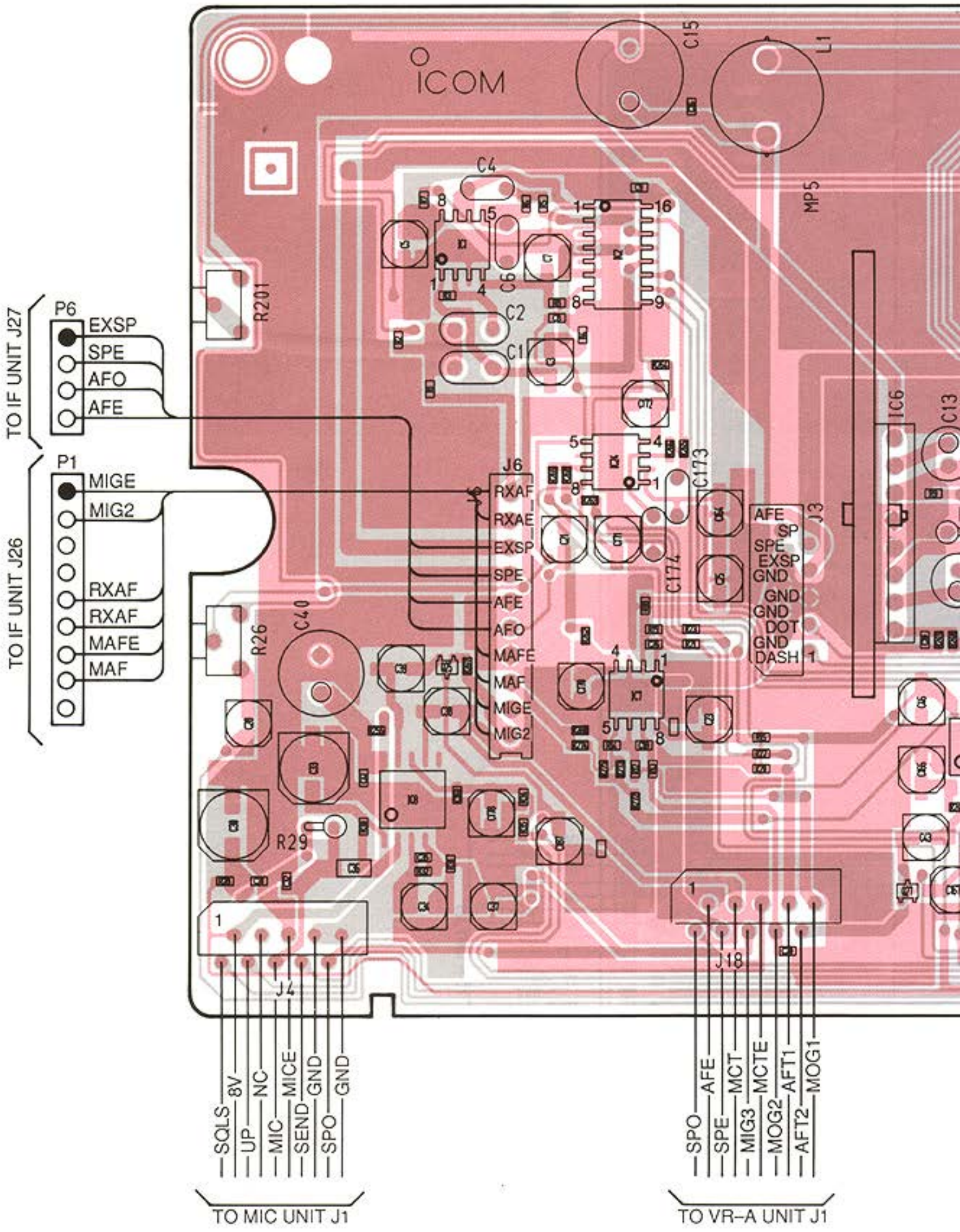

ManualsPlus.com

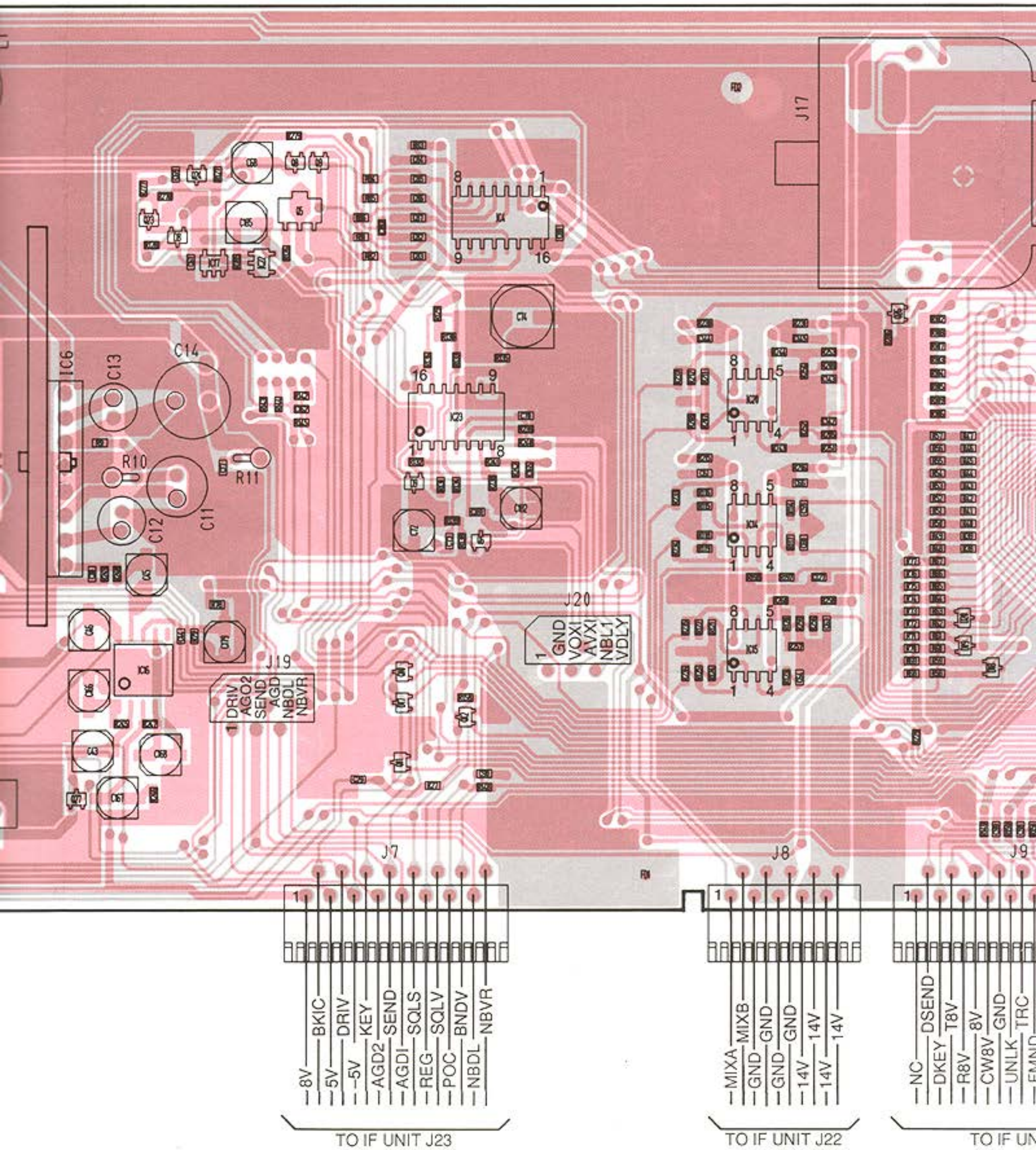

ManualsPlus.com

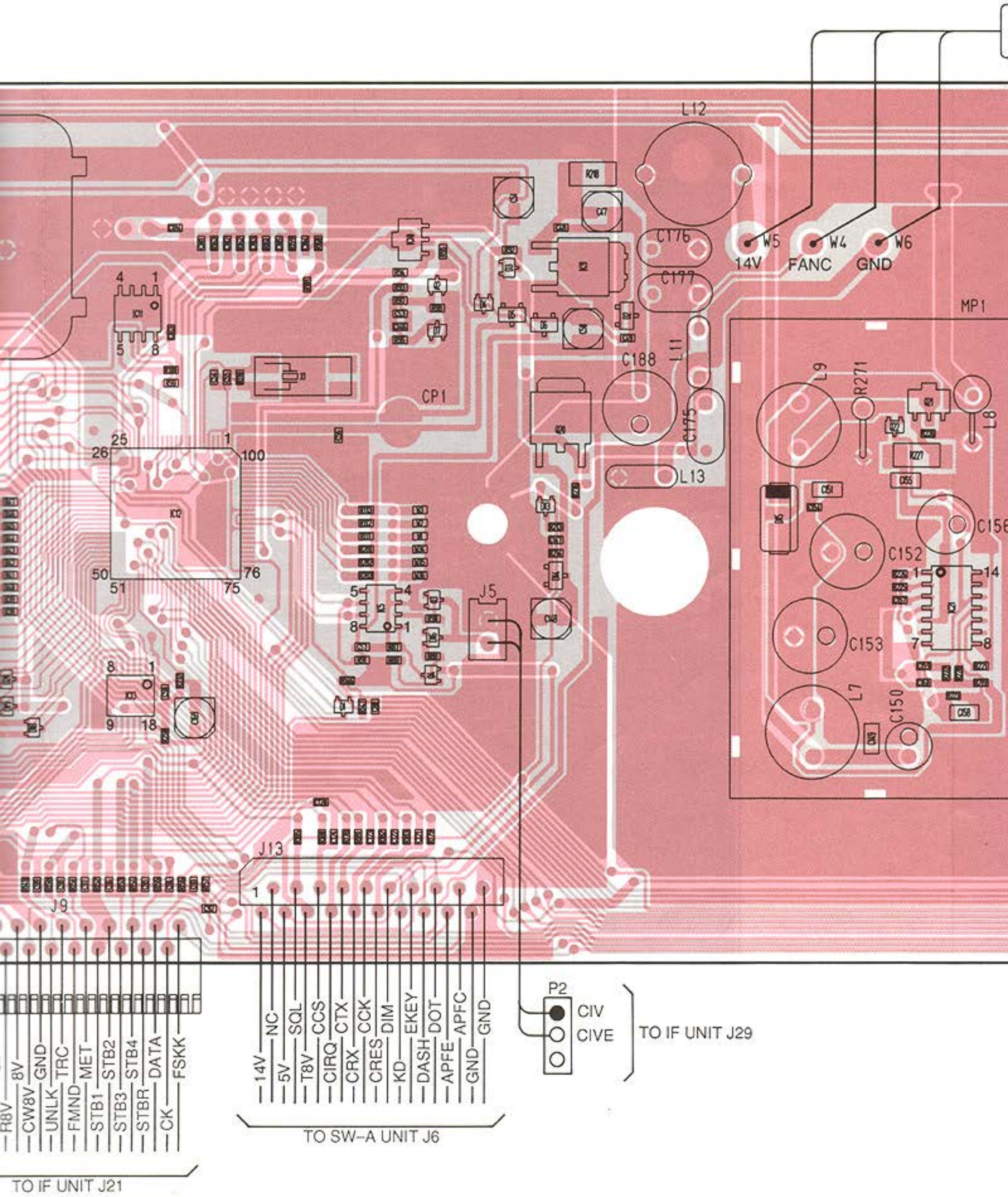

ManualsPlus.com

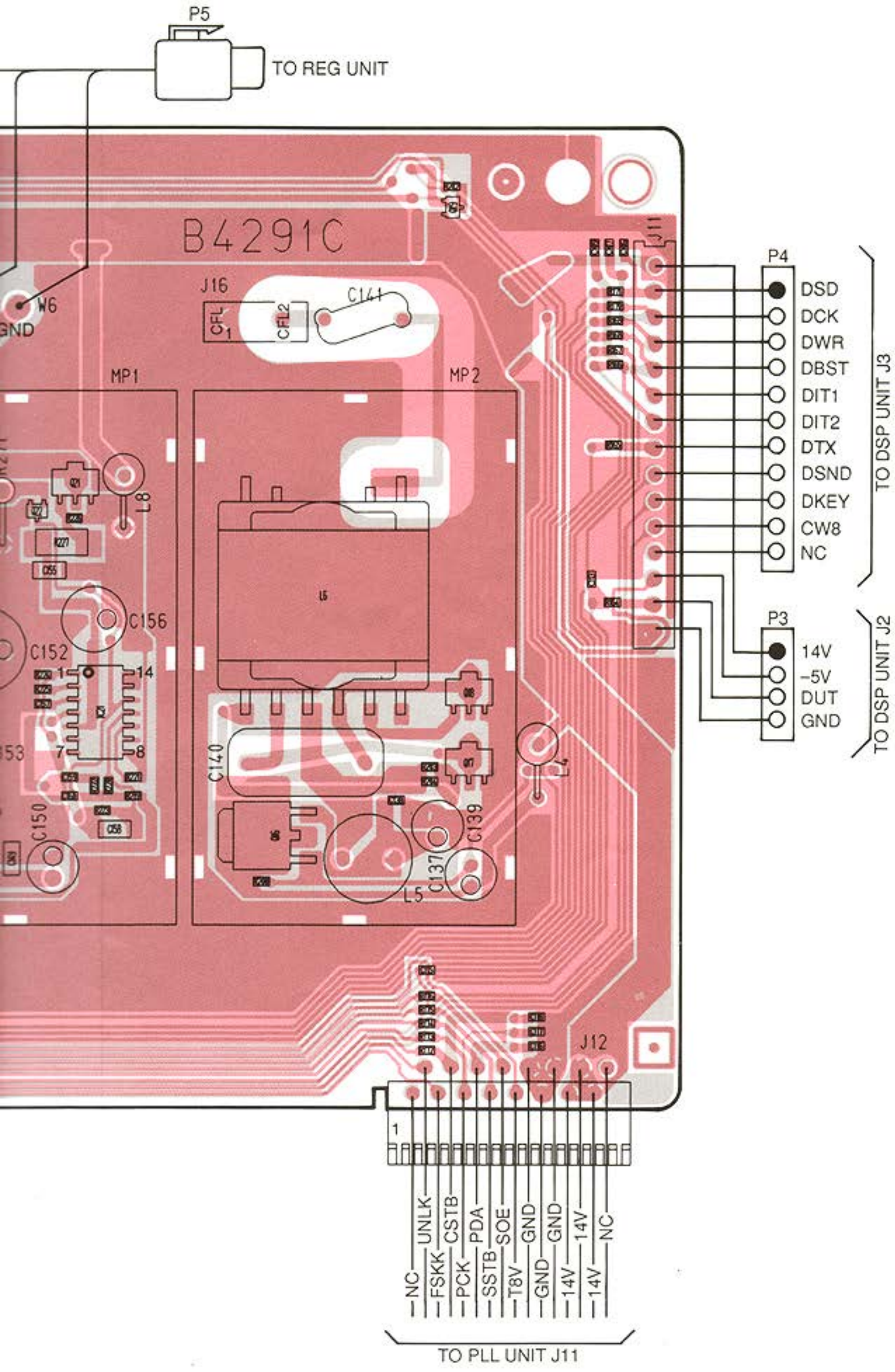

ManualsPlus.com

9-6 RF UNIT

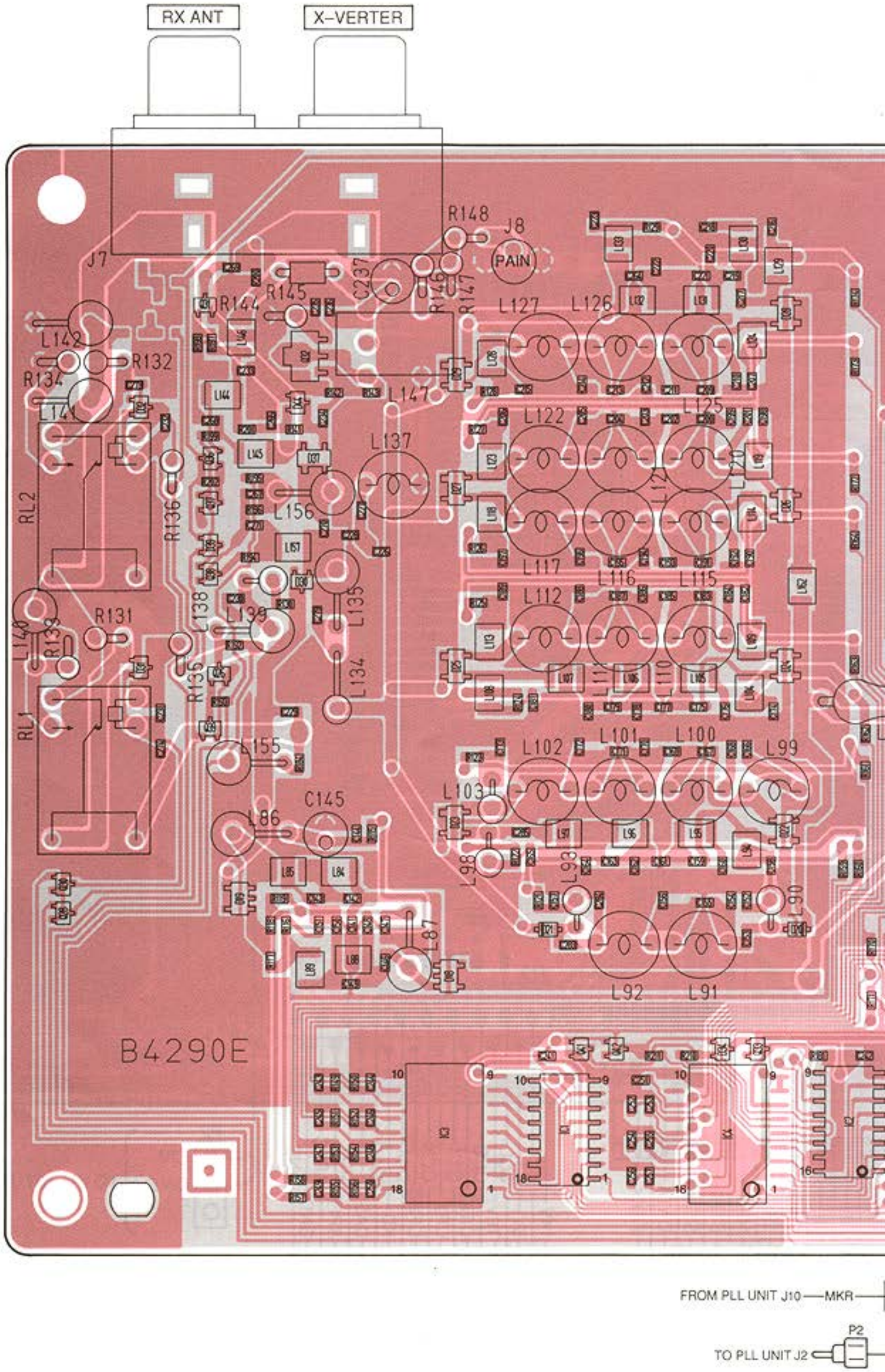

ManualsPlus.com

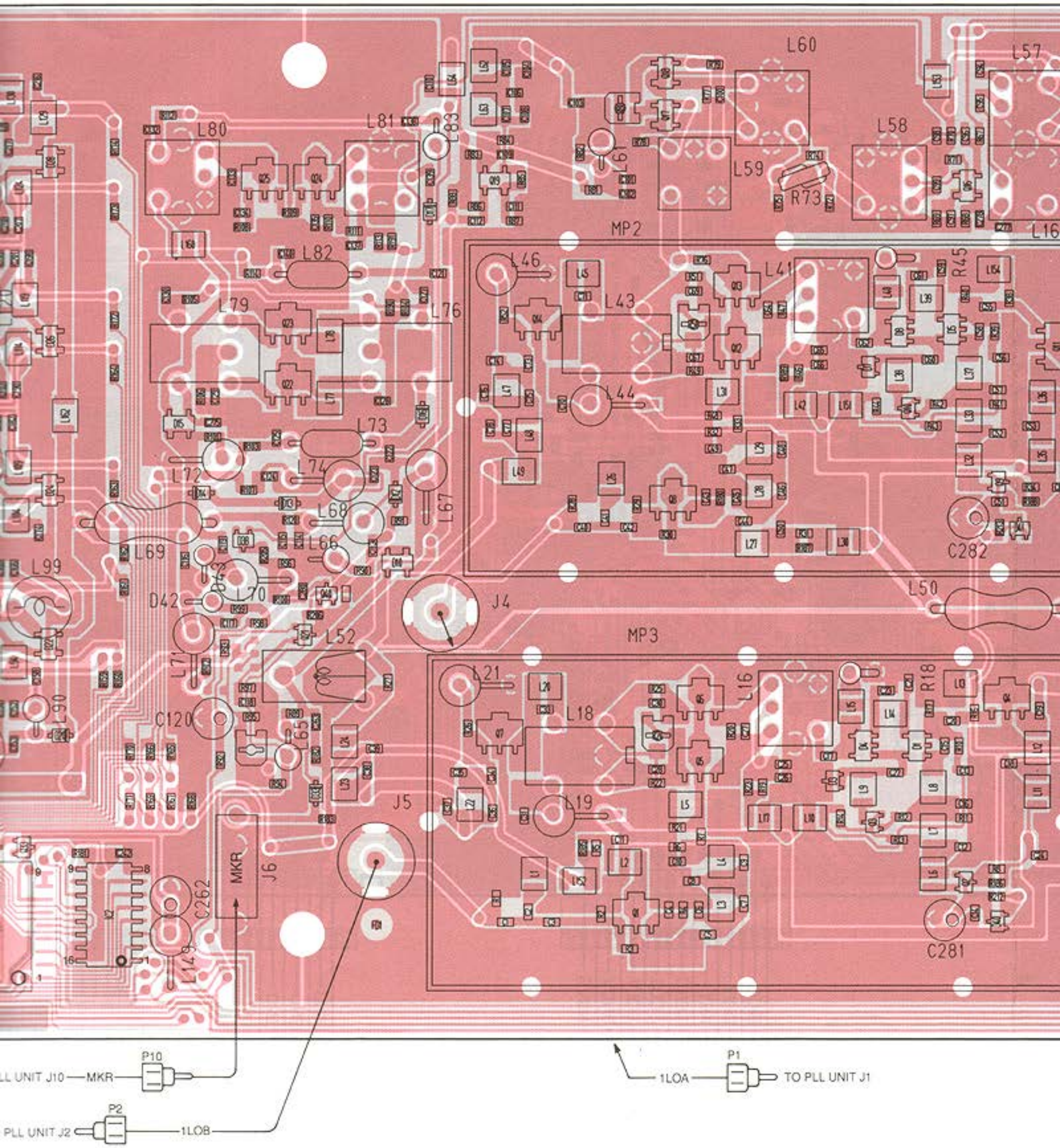

ManualsPlus.com

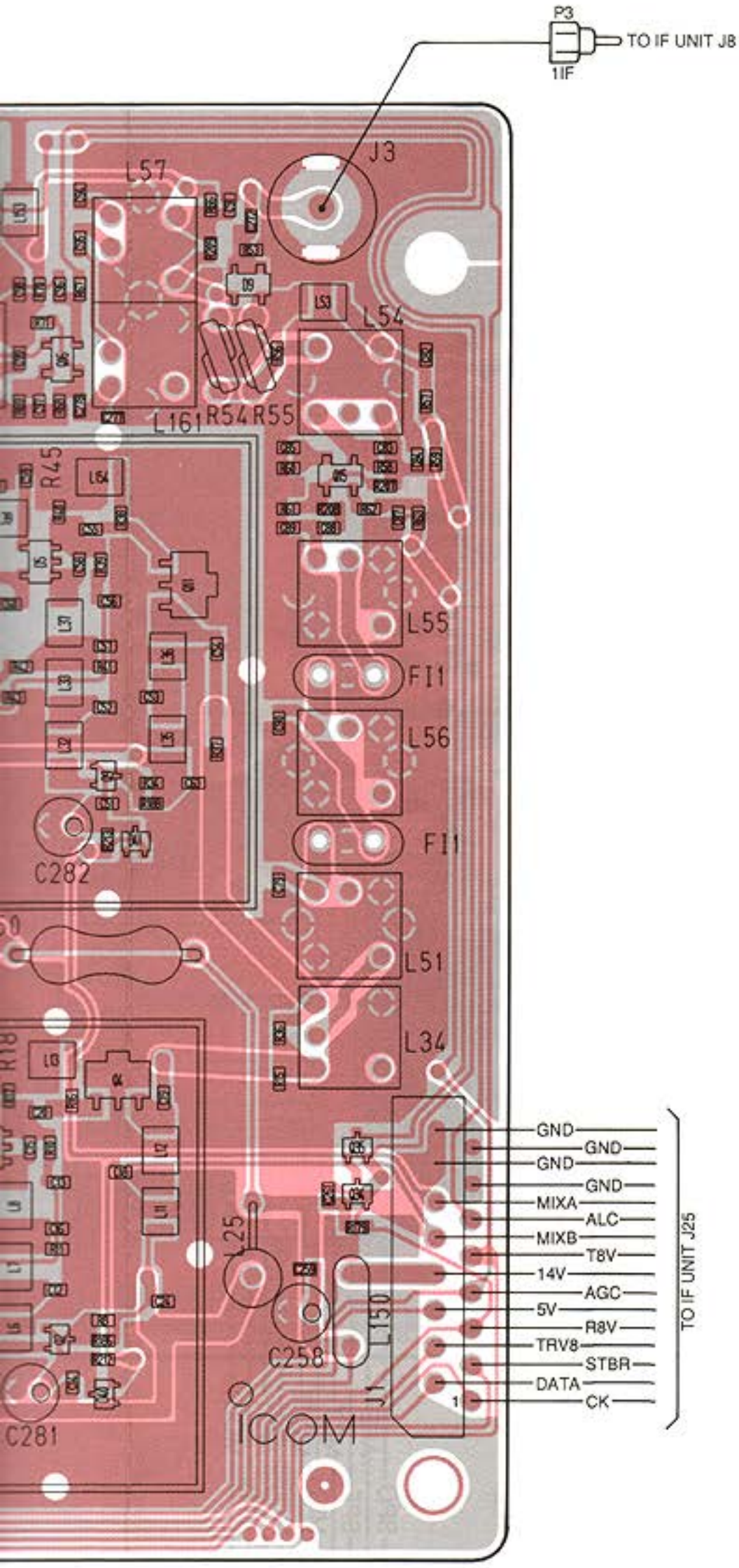

ManualsPlus.com

9-7 IF UNIT

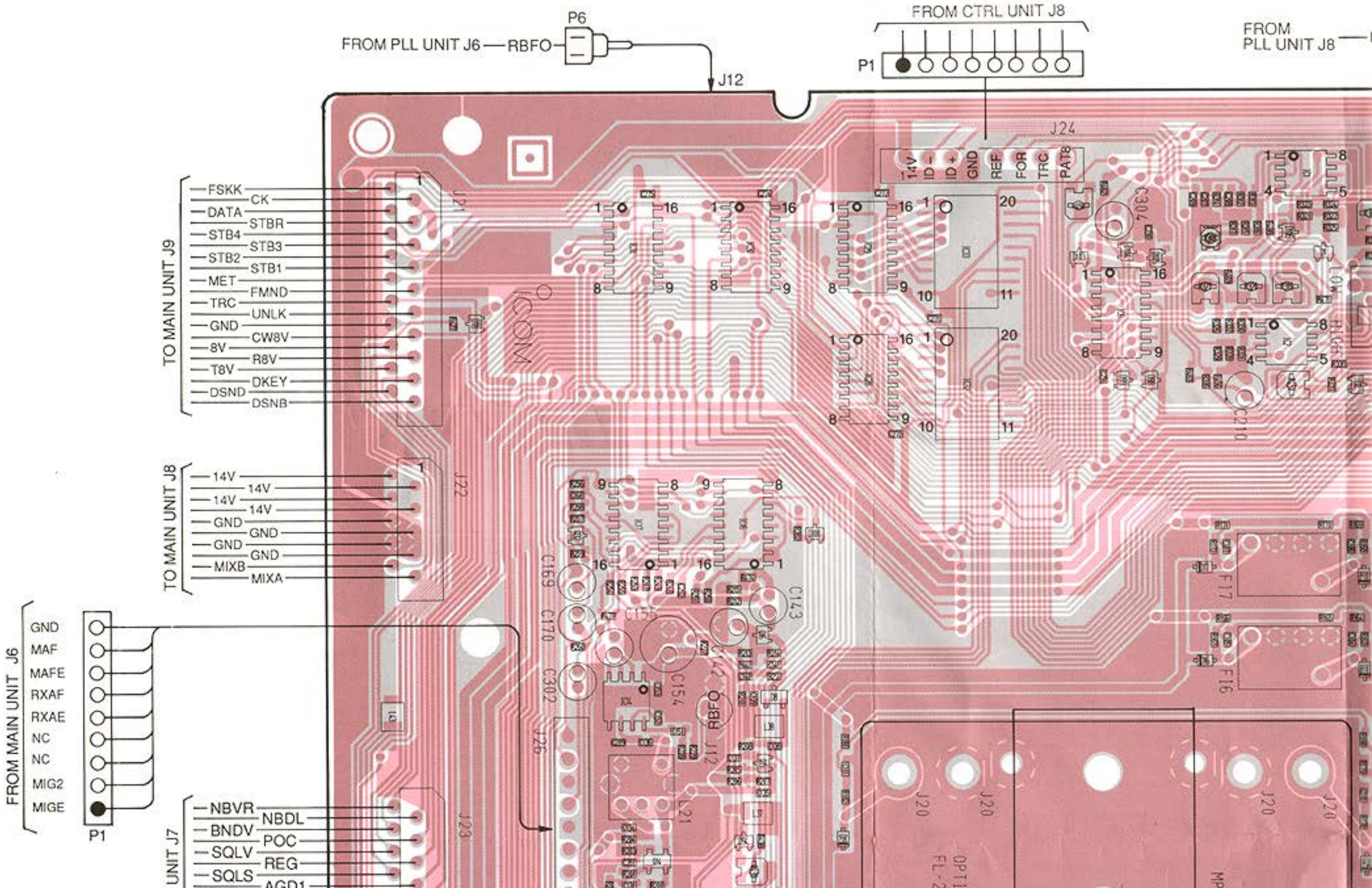

ManualsPlus.com

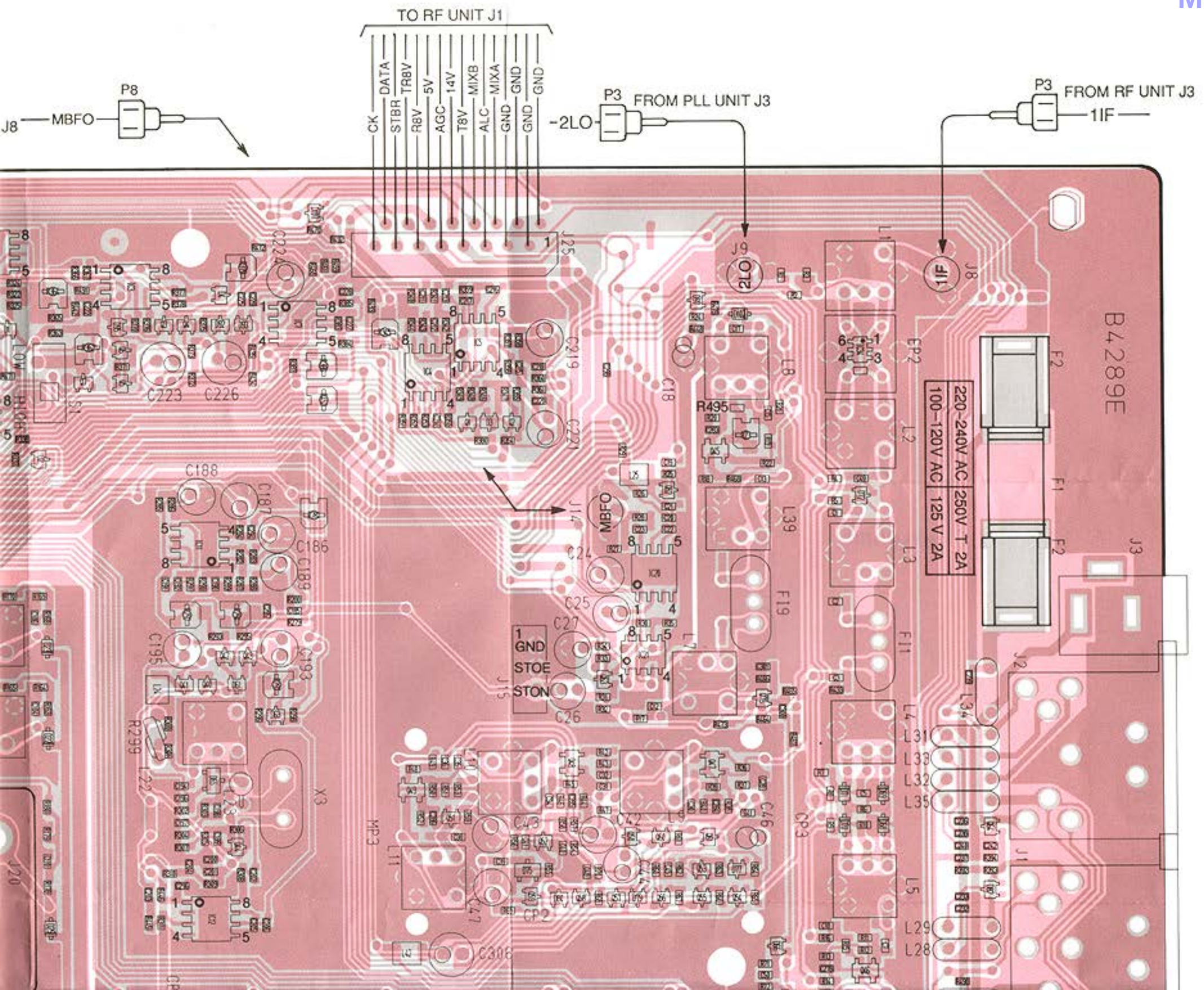

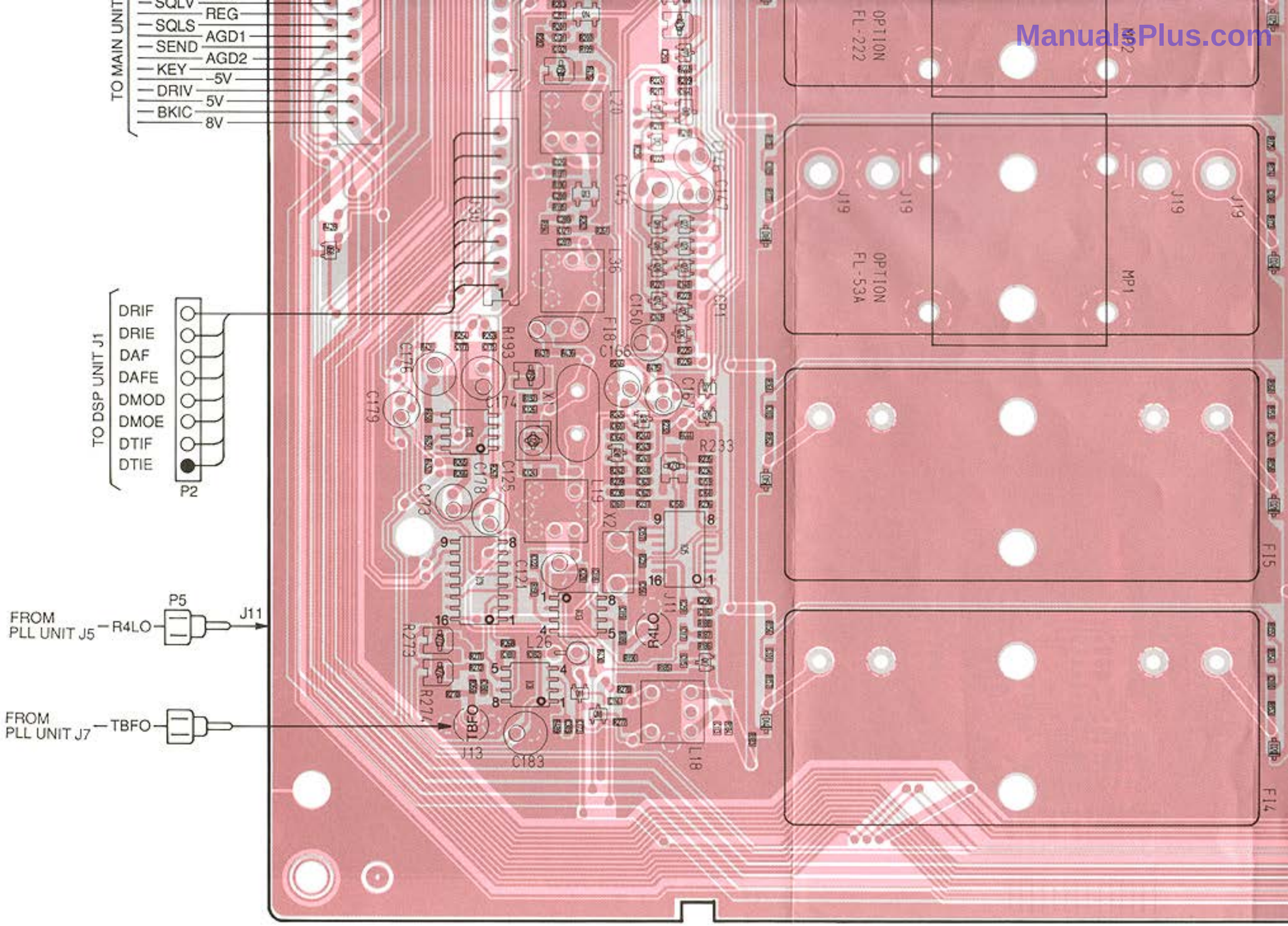

ManualsPlus.com

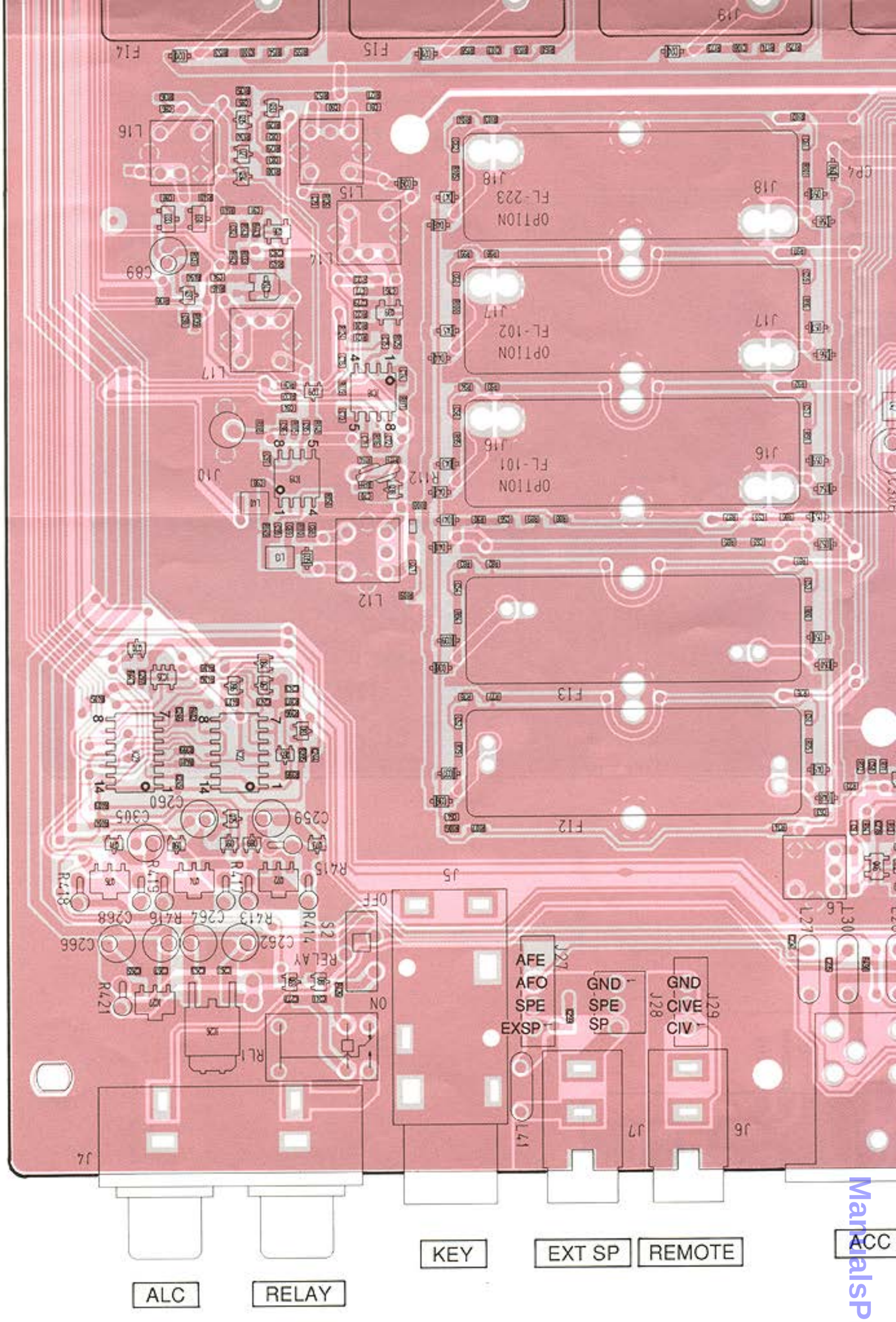

ManualsPlus.com

ManualsPlus.com

• PLL UNIT

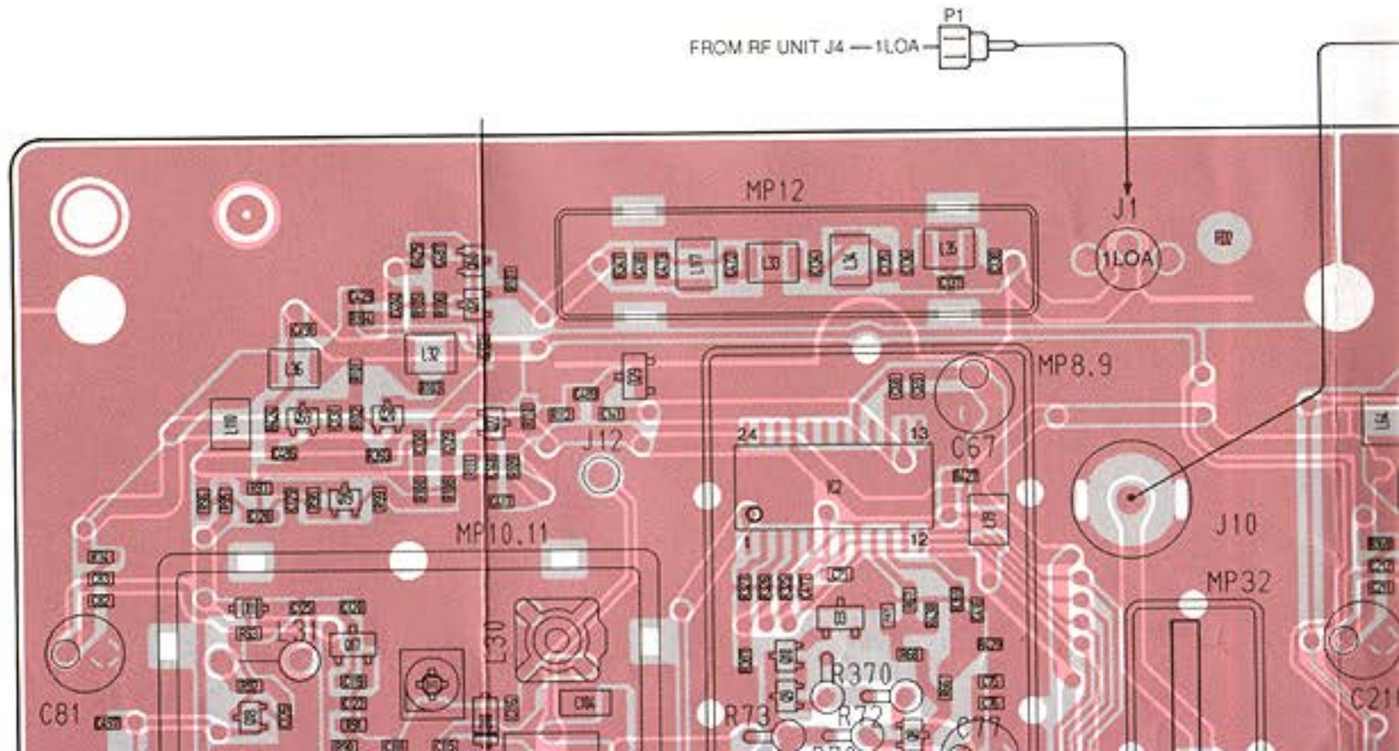

• MARKER UNIT

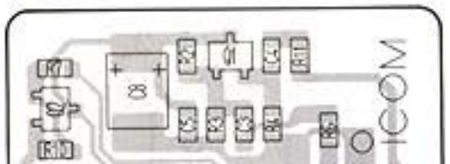

ManualsPlus.com

● DDS-A/B/C/D BOARD

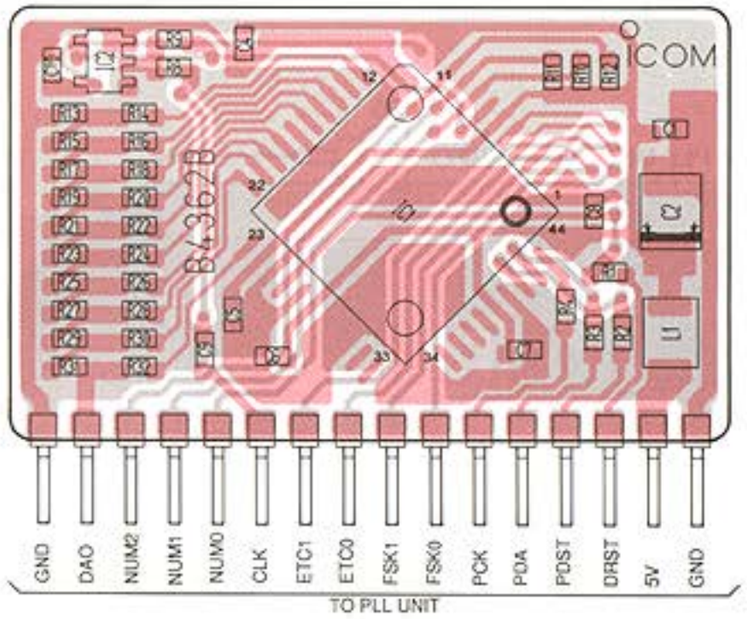

P10 TO RF UNIT J6
MKRO

P2 1LOB FROM RF UNIT J5

MP23
J2
(1LOB)
ICOM
MP19.20
J14
MP21.22
C189
MP24
DDS-A BOARD
L59
L58
L57
C210
R377
R168
R167
R165
C199
R164
MP25
DDS-B BOARD
MP26
J4
P4 3LO TO IF UNIT J10

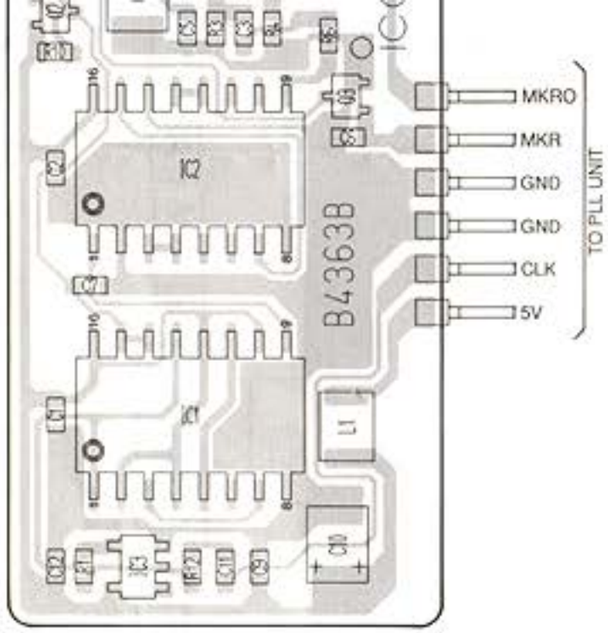

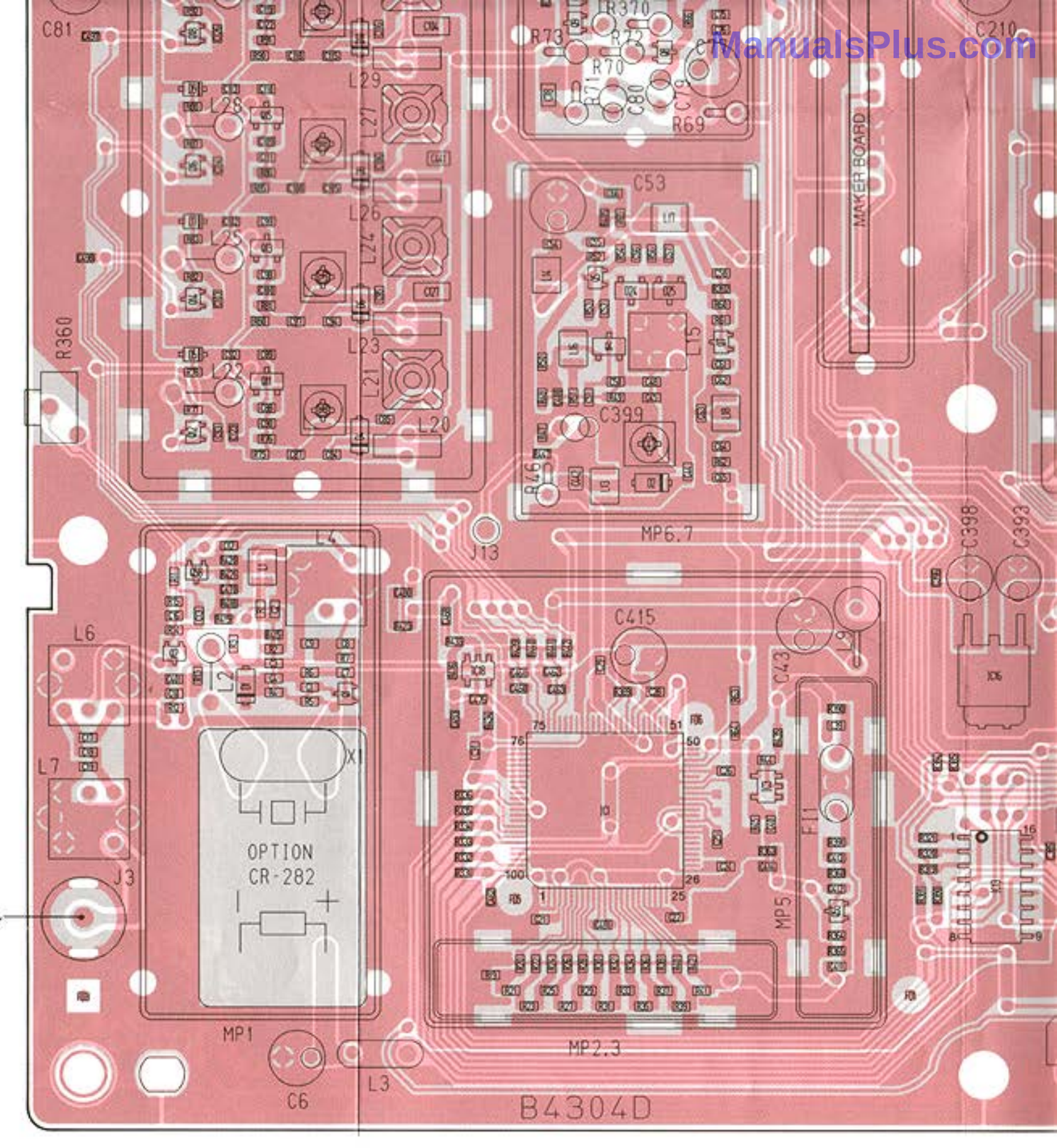

TO IF UNIT J9 — P3 — 2LC

ManualsPlus.com

ManualsPlus.com

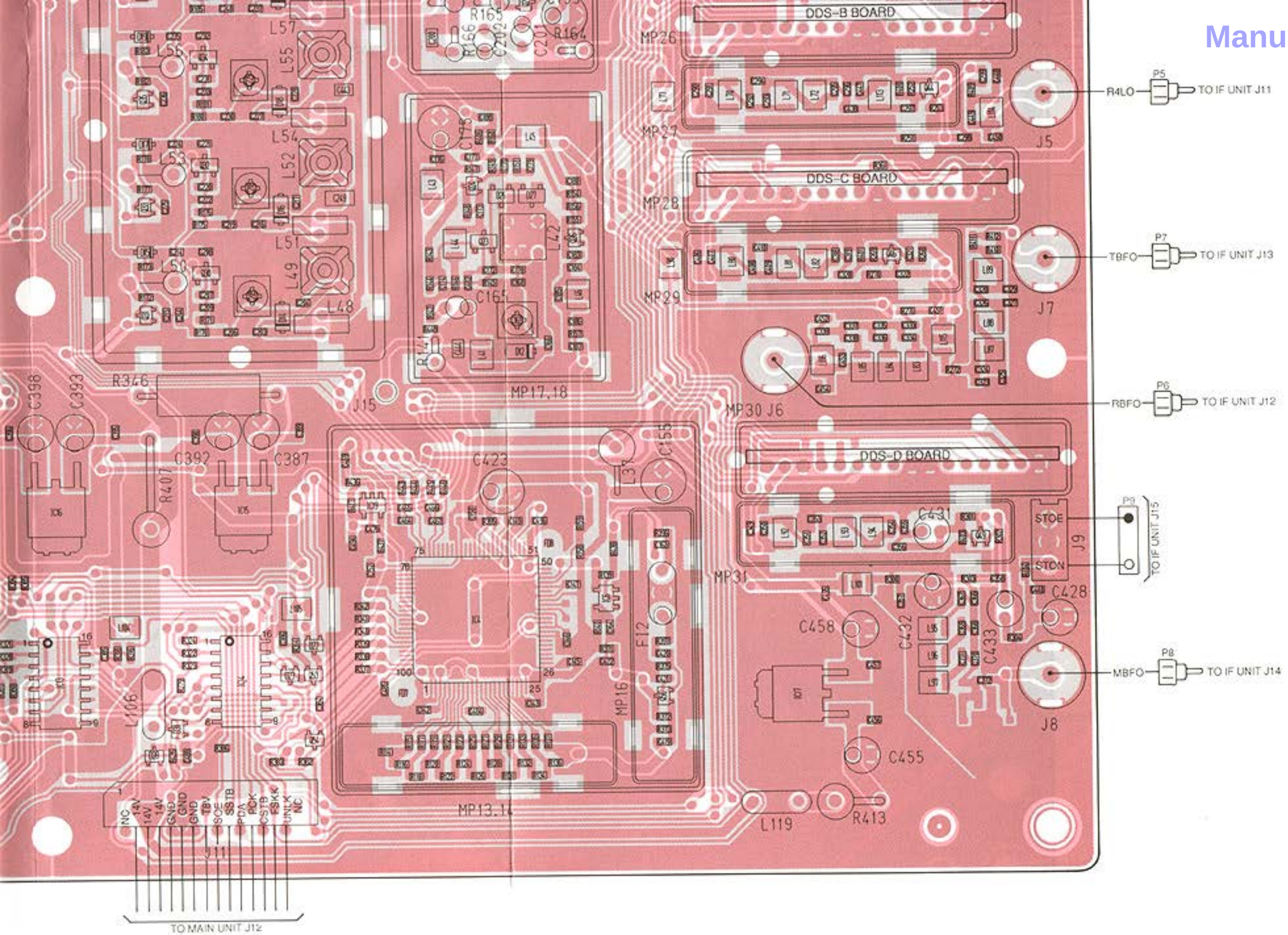

ManualsPlus.com

9-9 PA UNIT

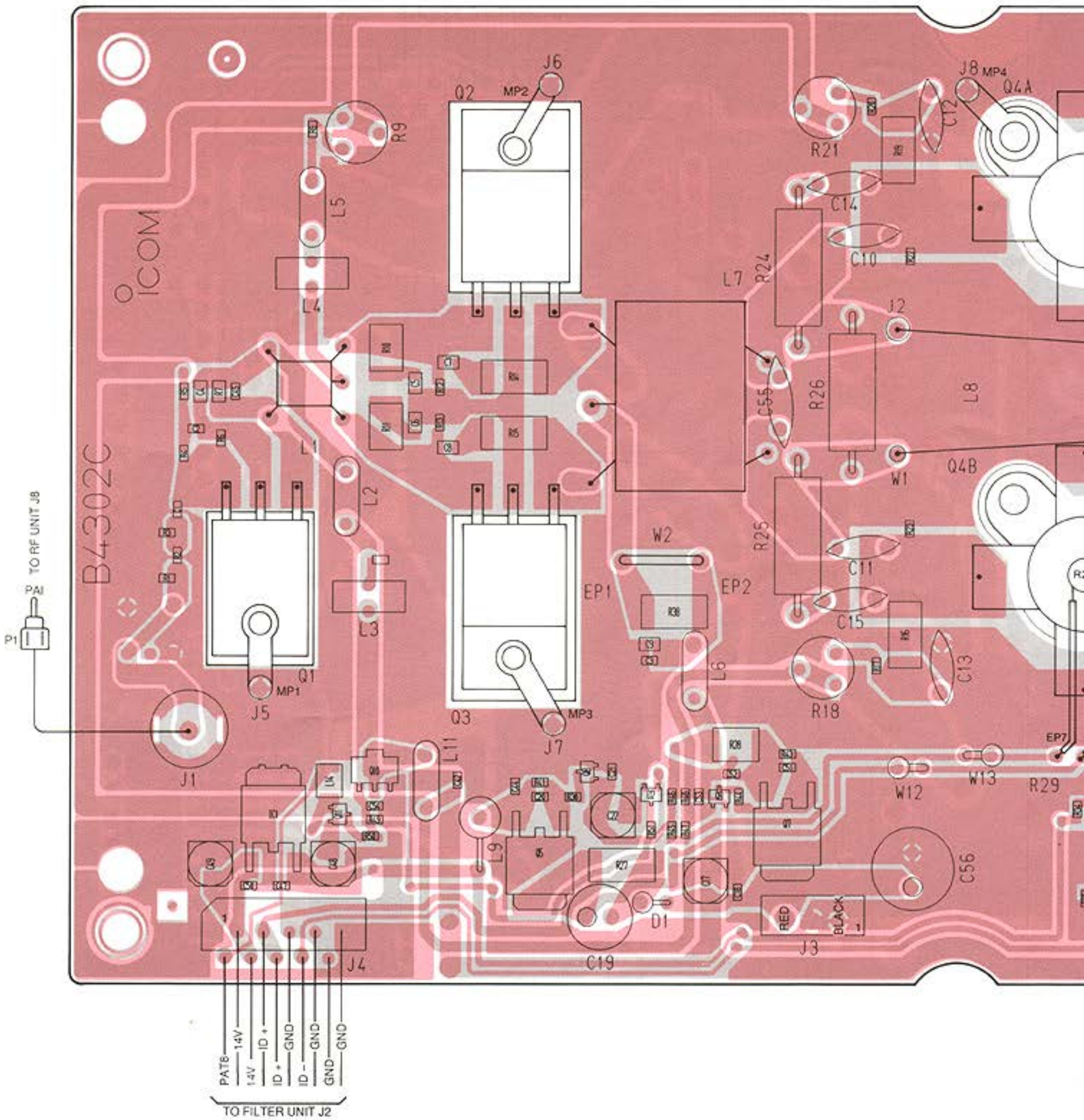

ManualsPlus.com

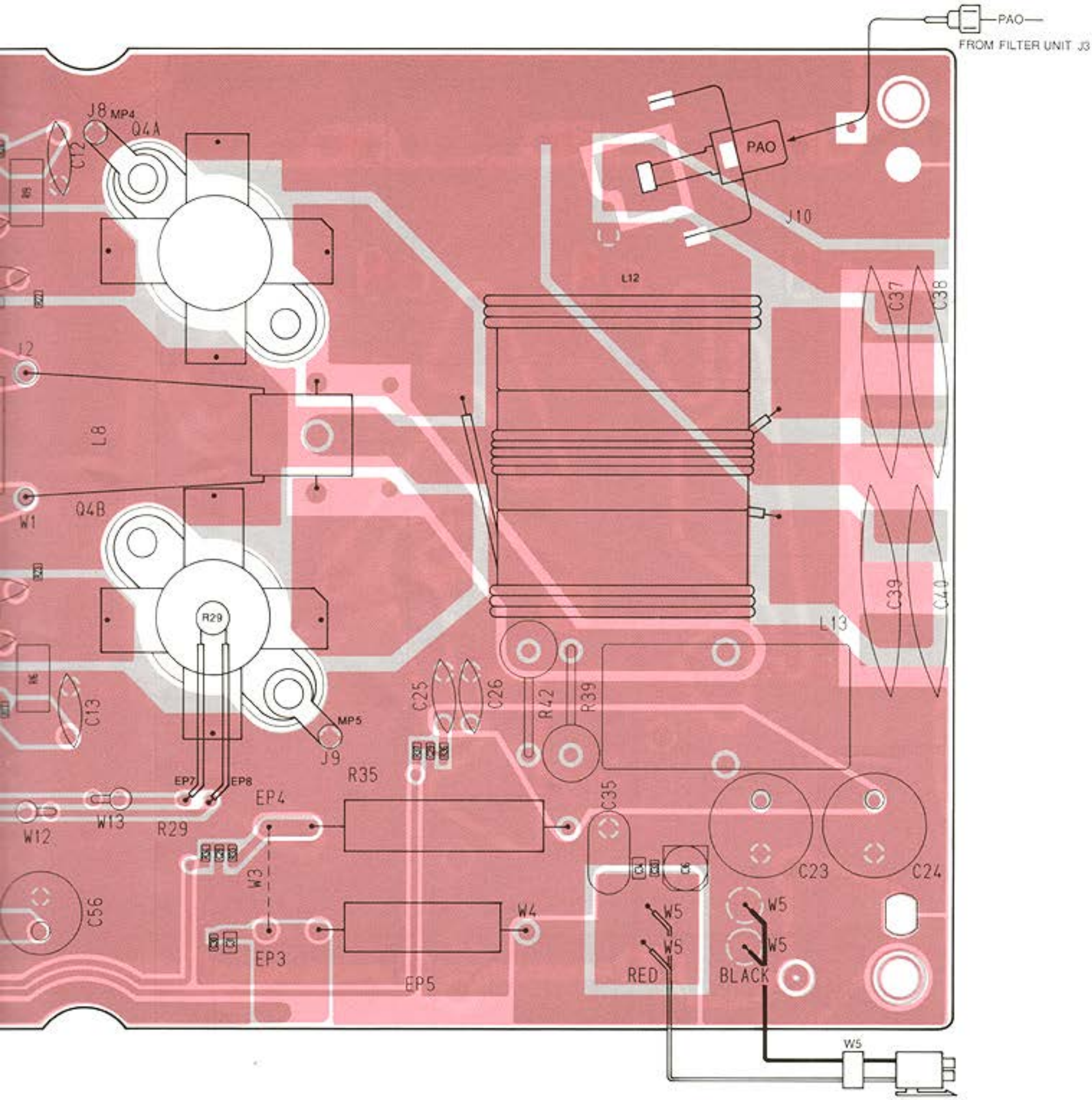

ManualsPlus.com

9-10 FILTER UNIT

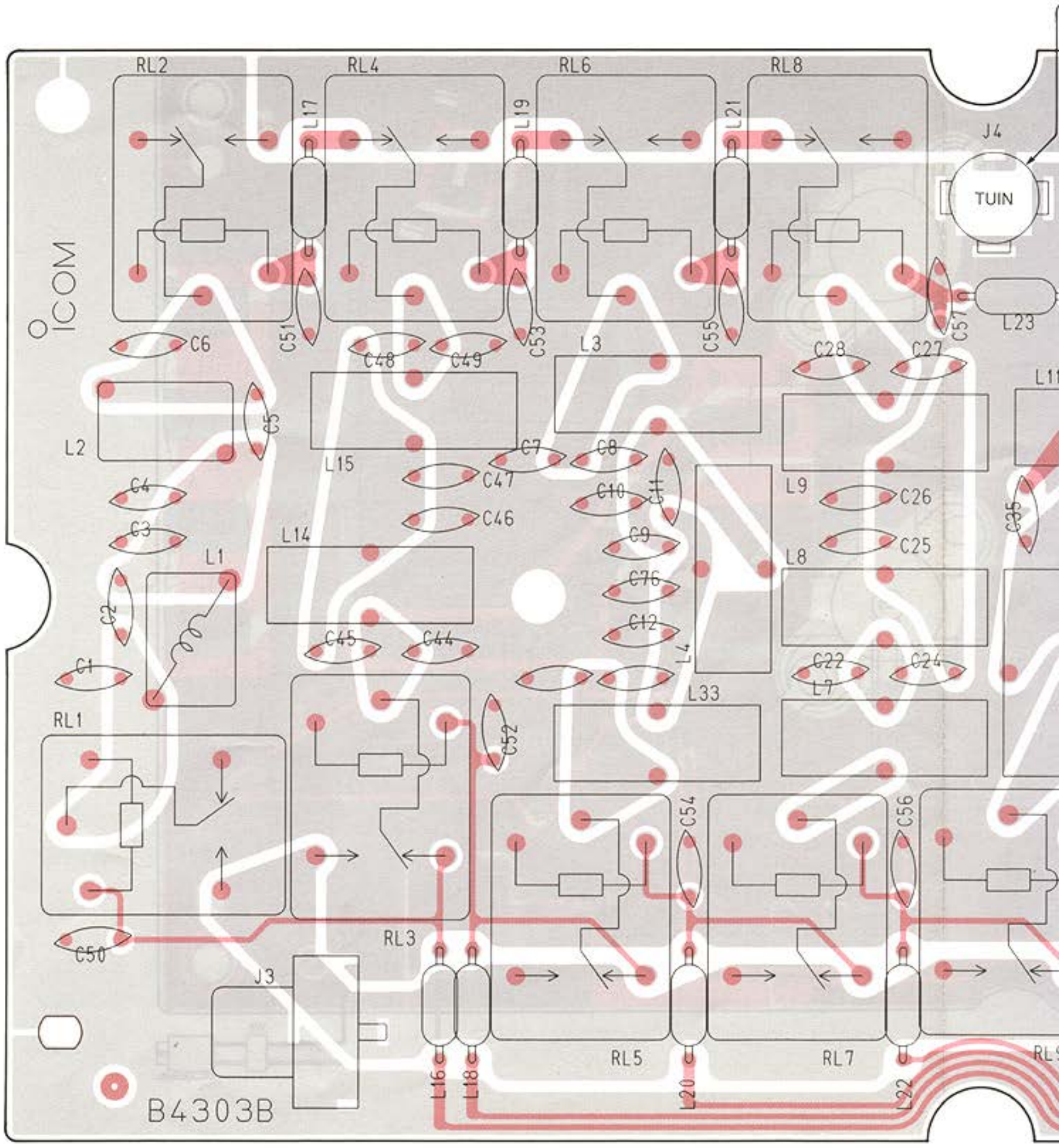

ManualsPlus.com

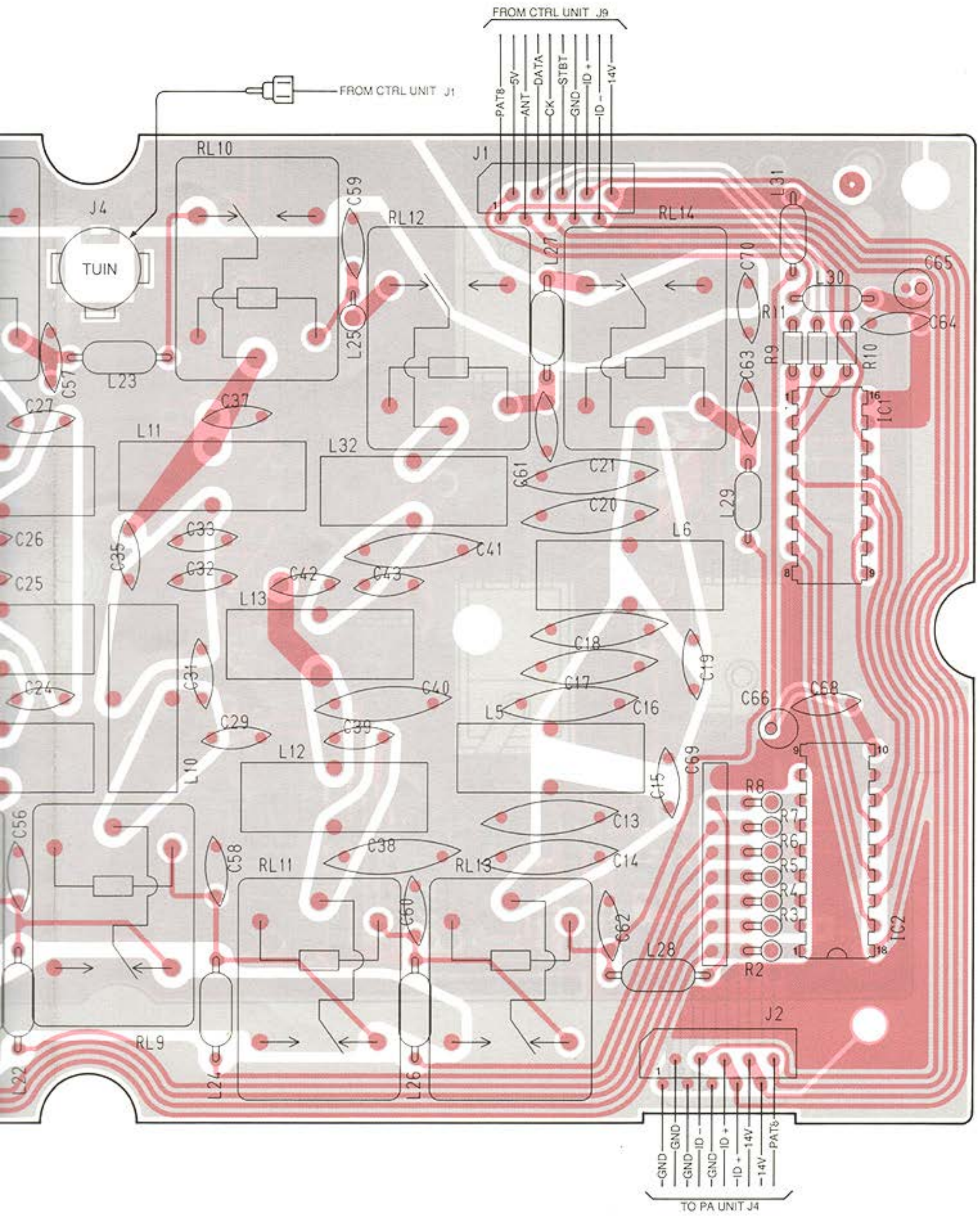

ManualsPlus.com

9-11 CTRL UNIT

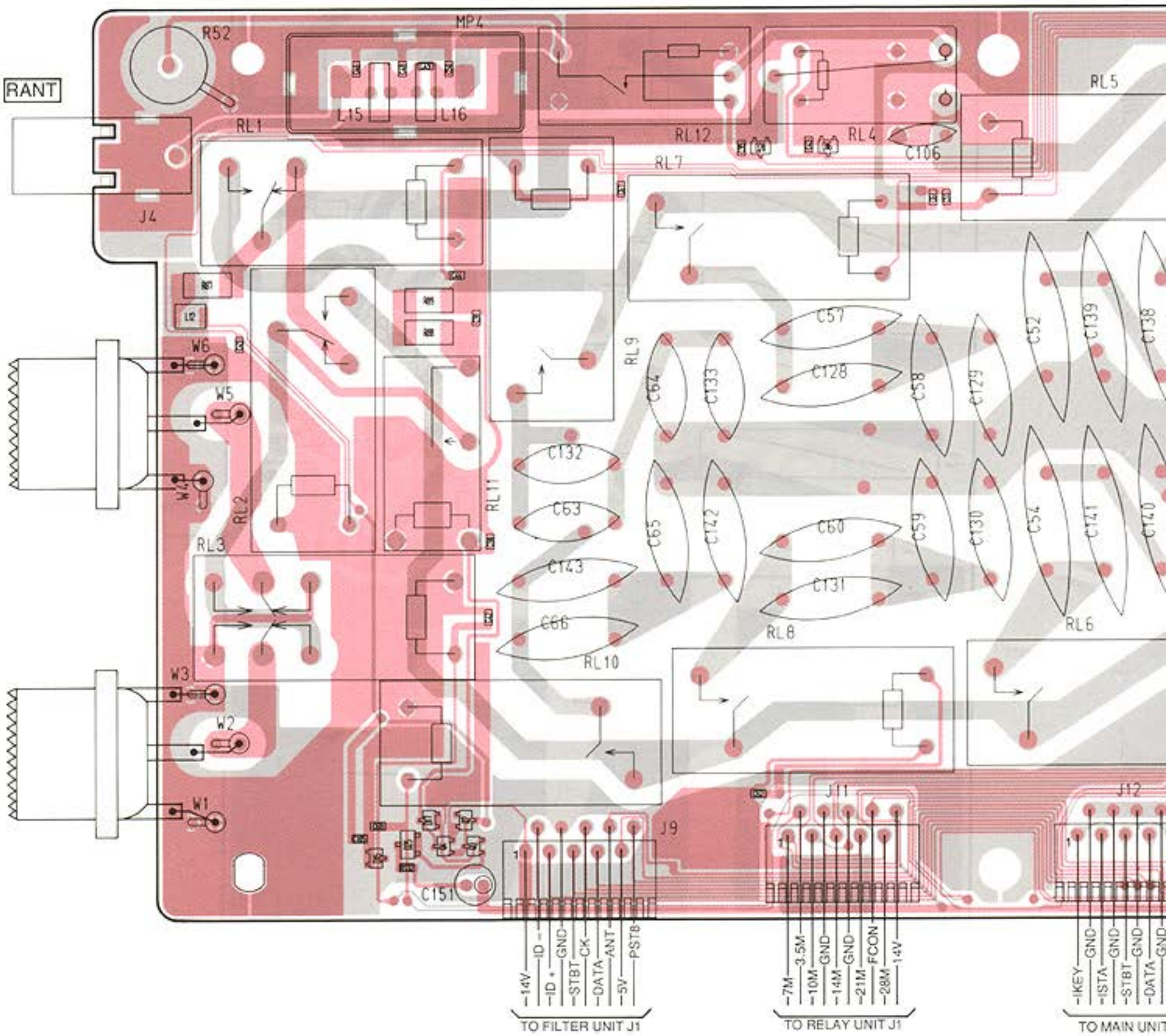

ManualsPlus.com

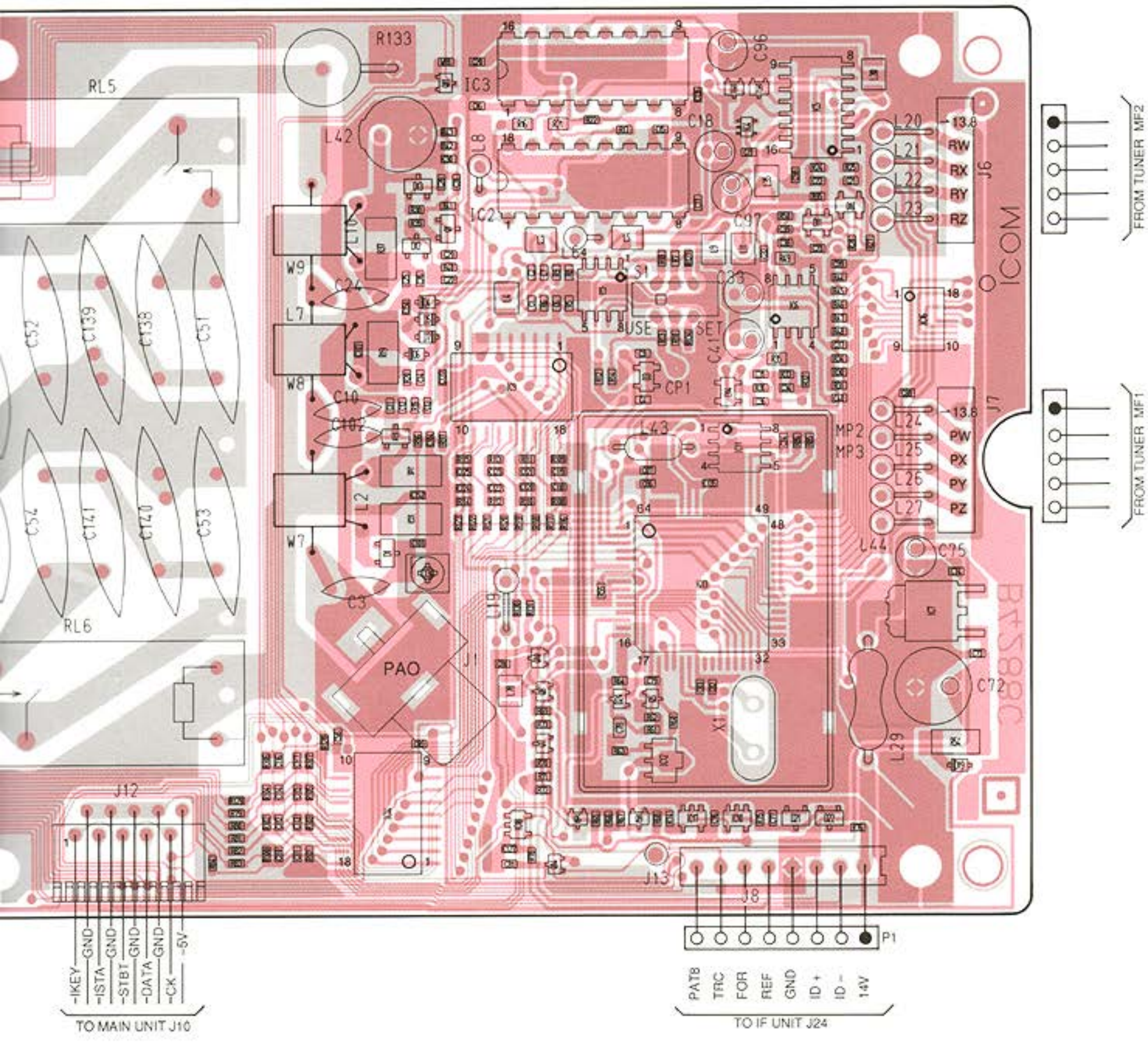

ManualsPlus.com

9-12 RELAY UNIT

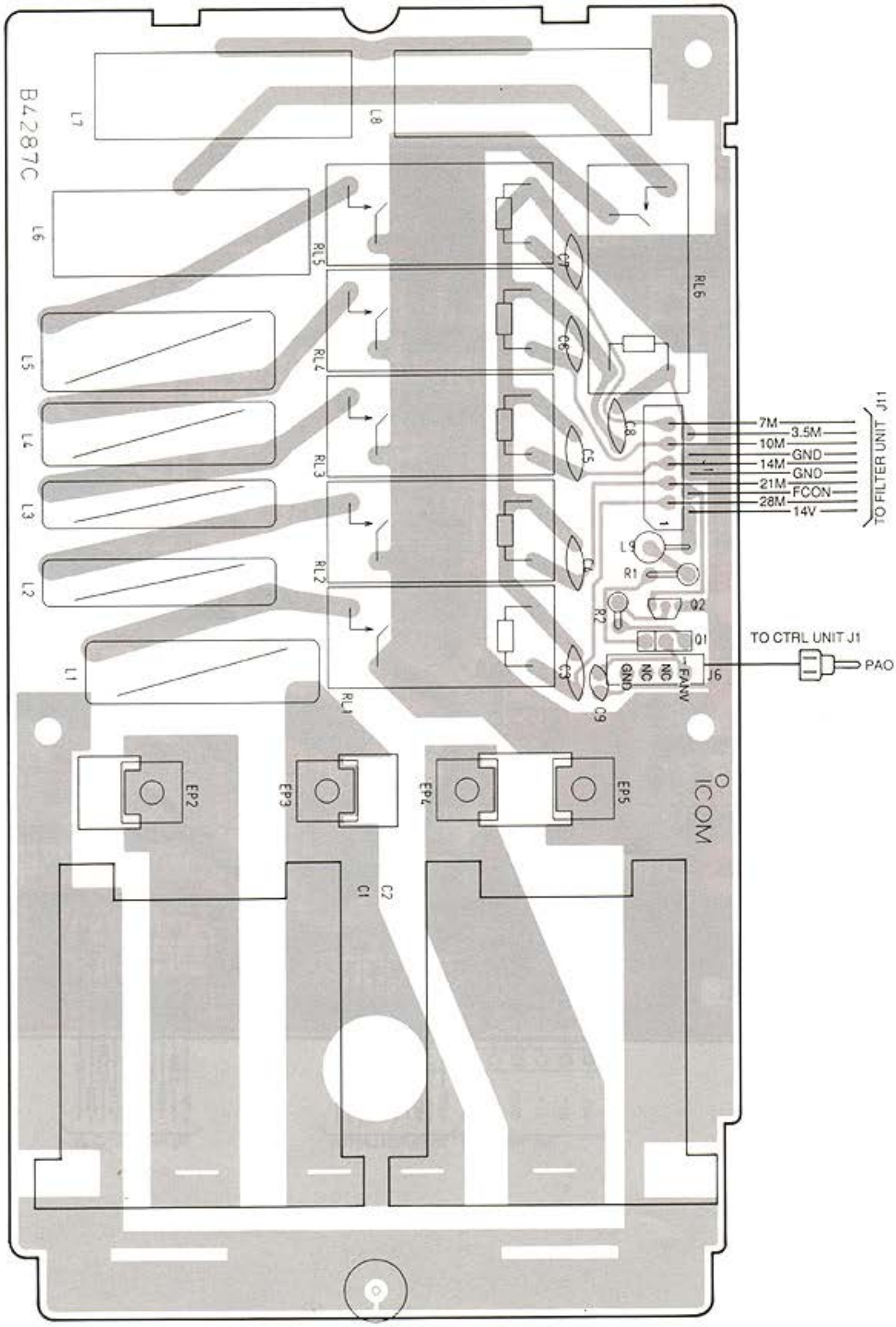

ManualsPlus.com

SECTION 10 VOLTAGE DIAGRAM/BLOCK DIAGRAM

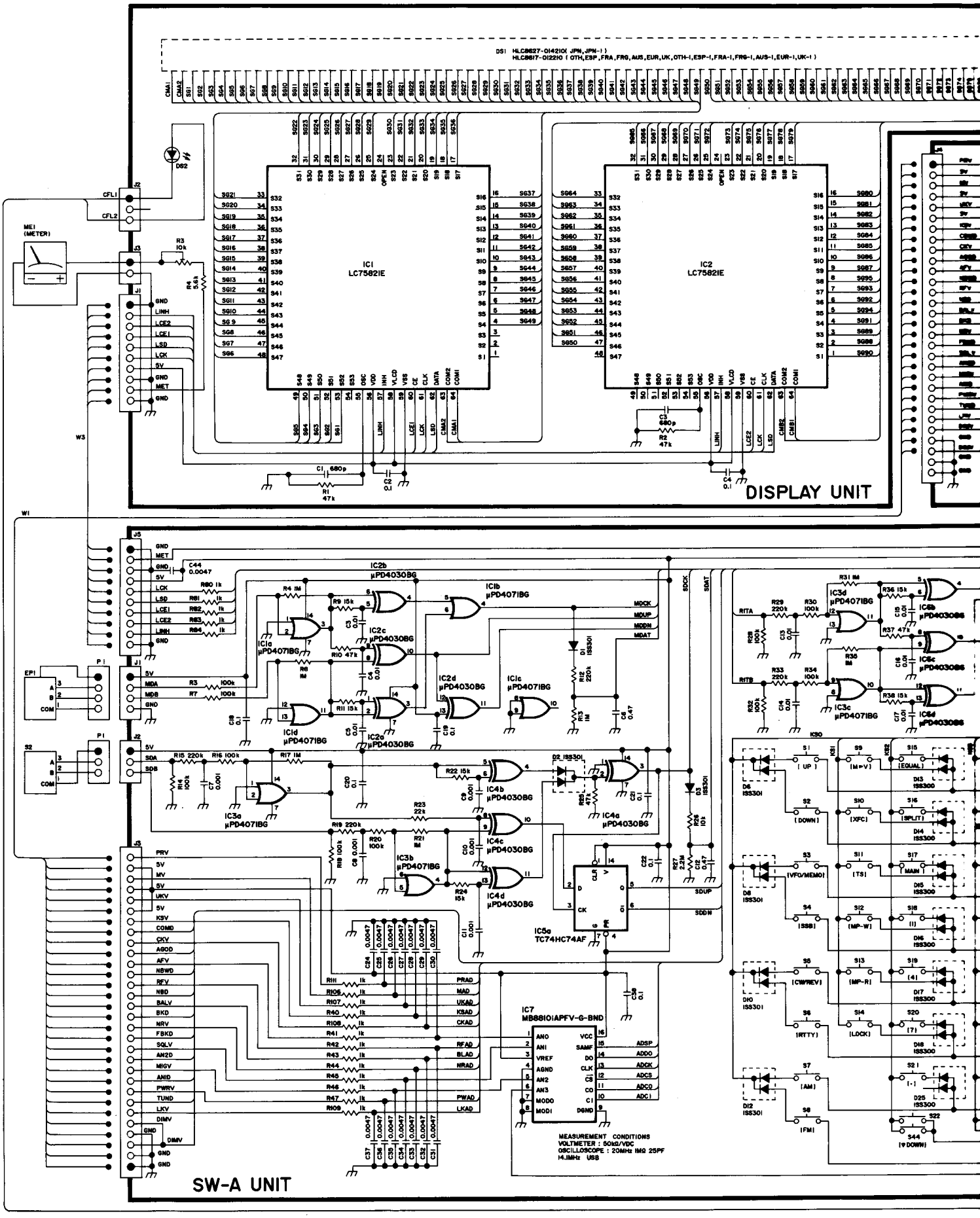

ManualsPlus.com

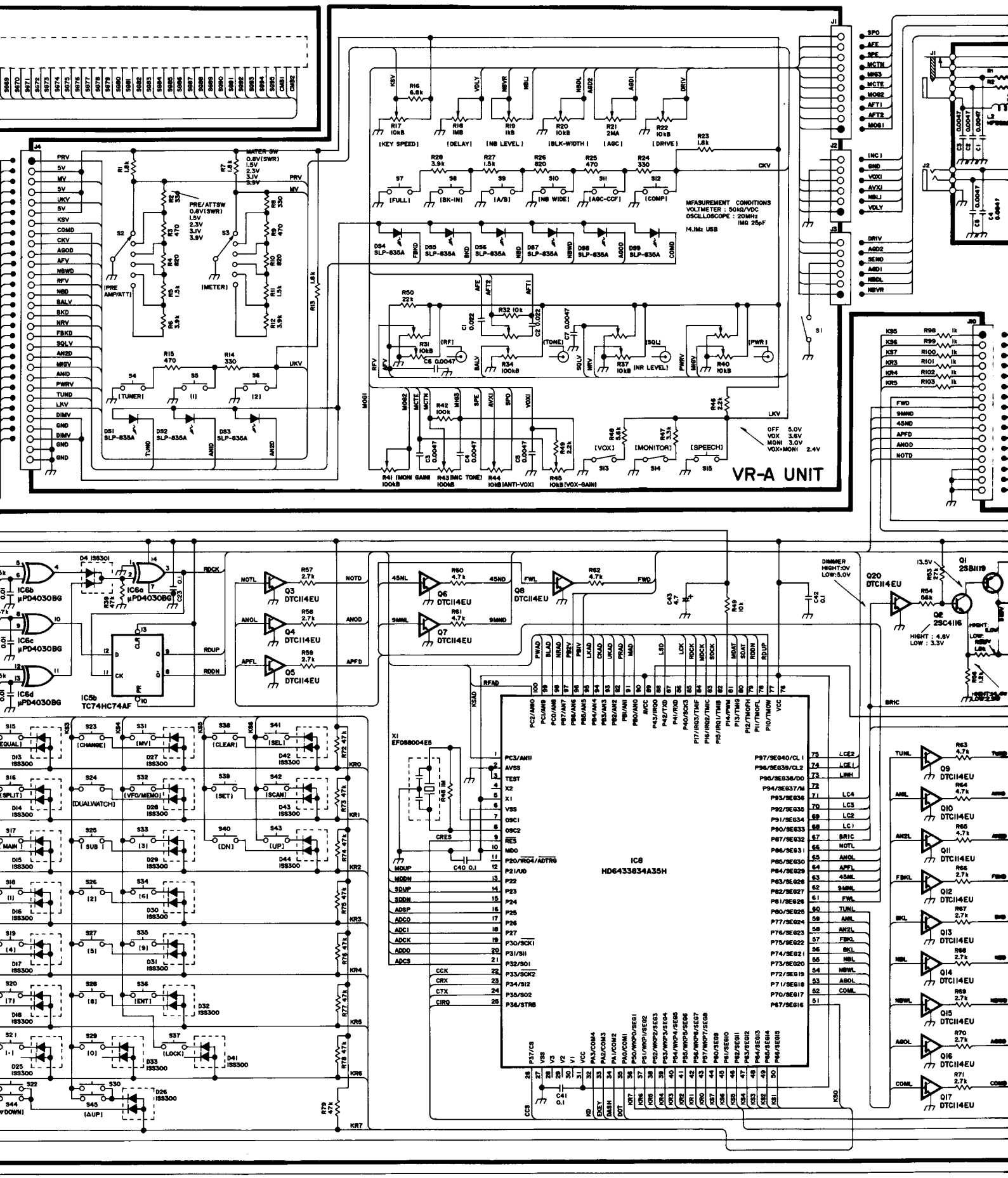

ManualsPlus.com

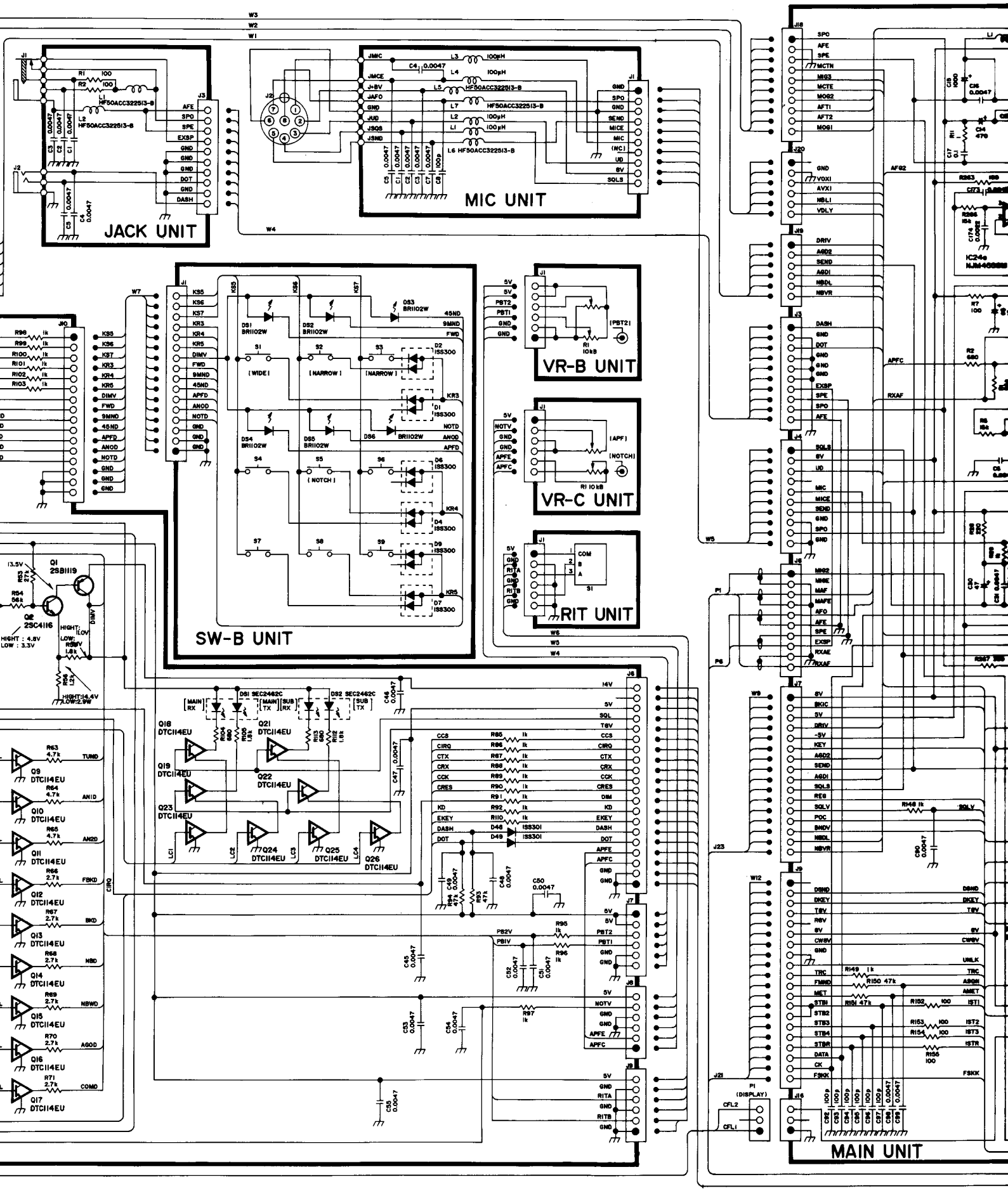

ManualsPlus.com

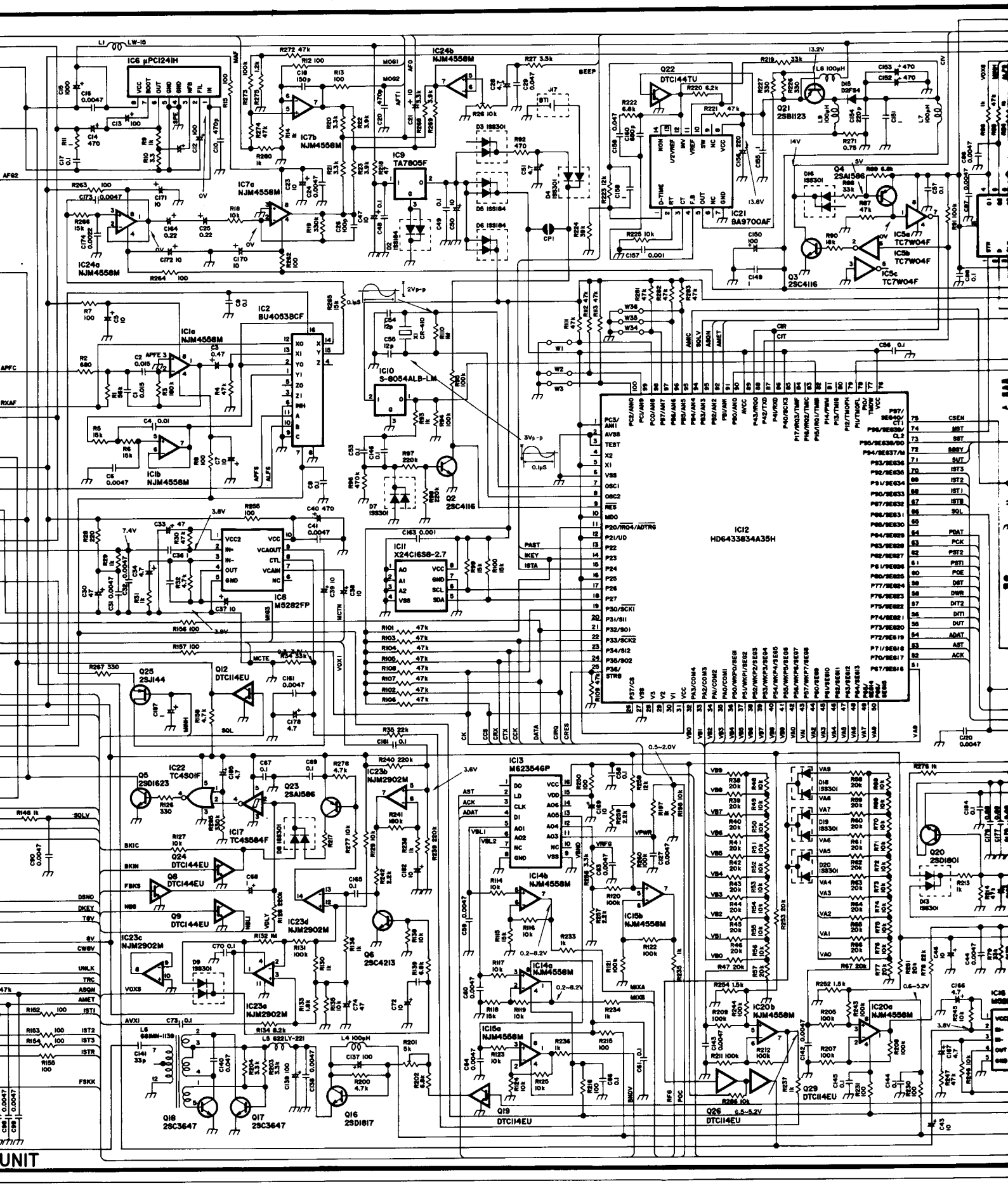

ManualsPlus.com

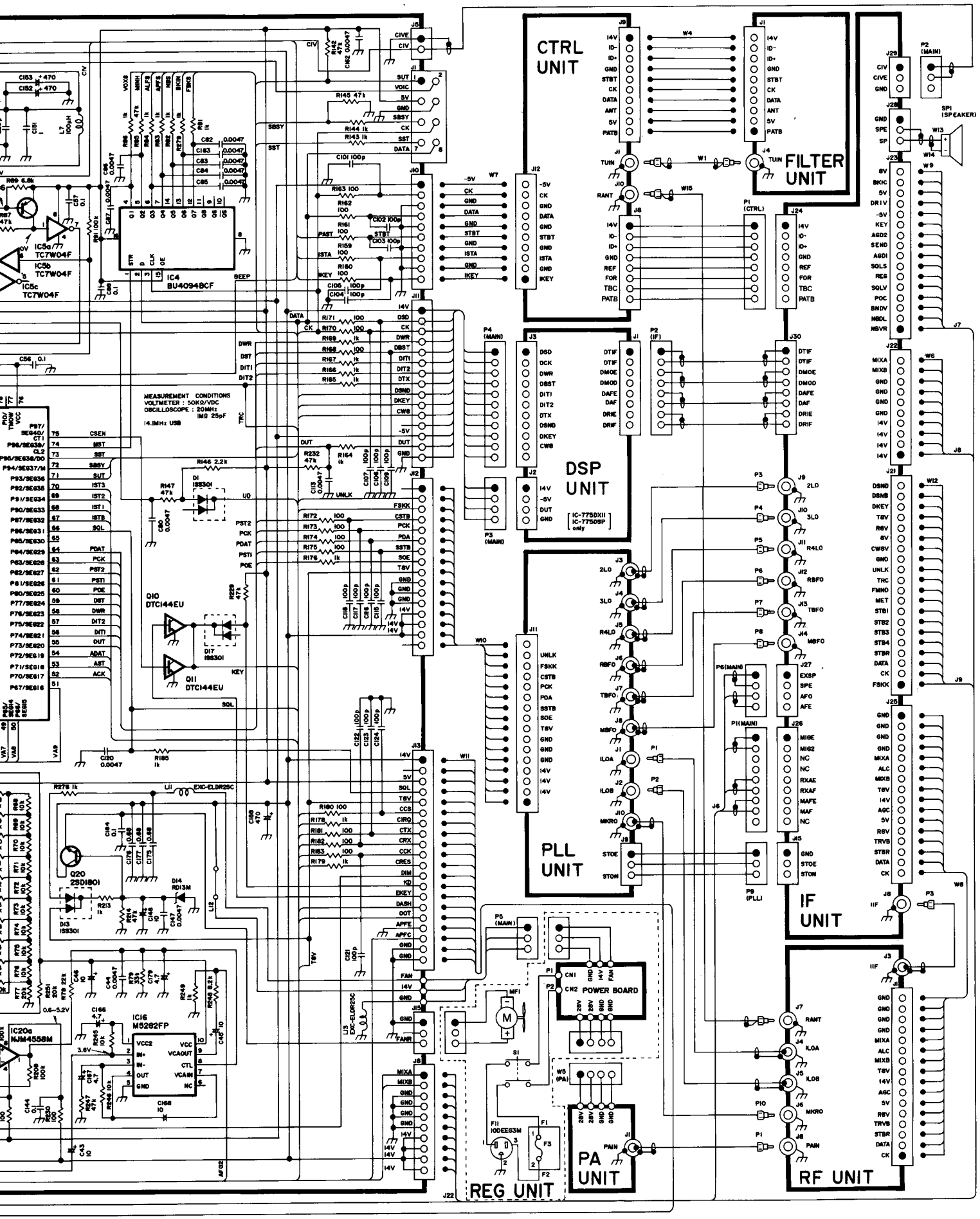

ManualsPlus.com

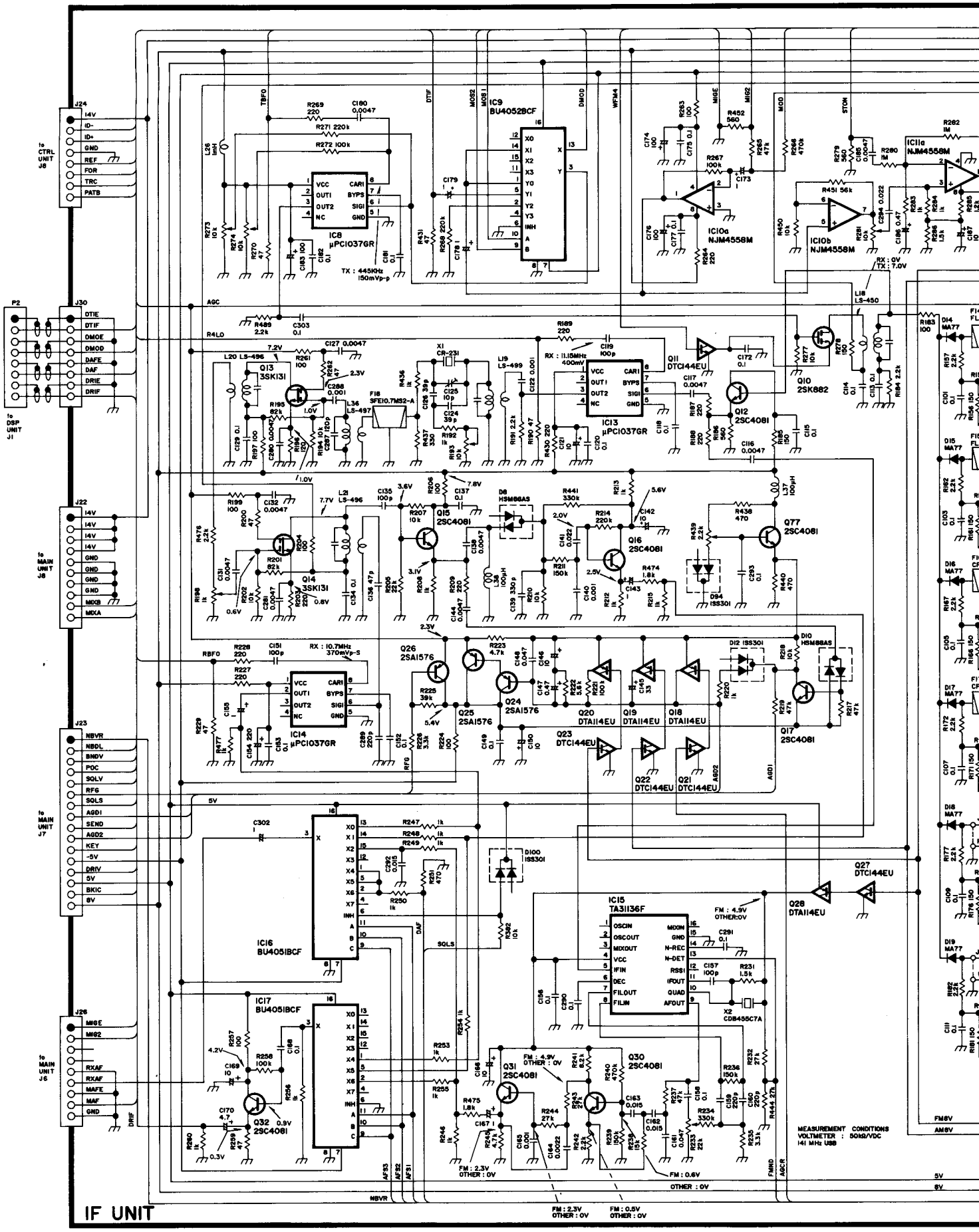

ManualsPlus.com

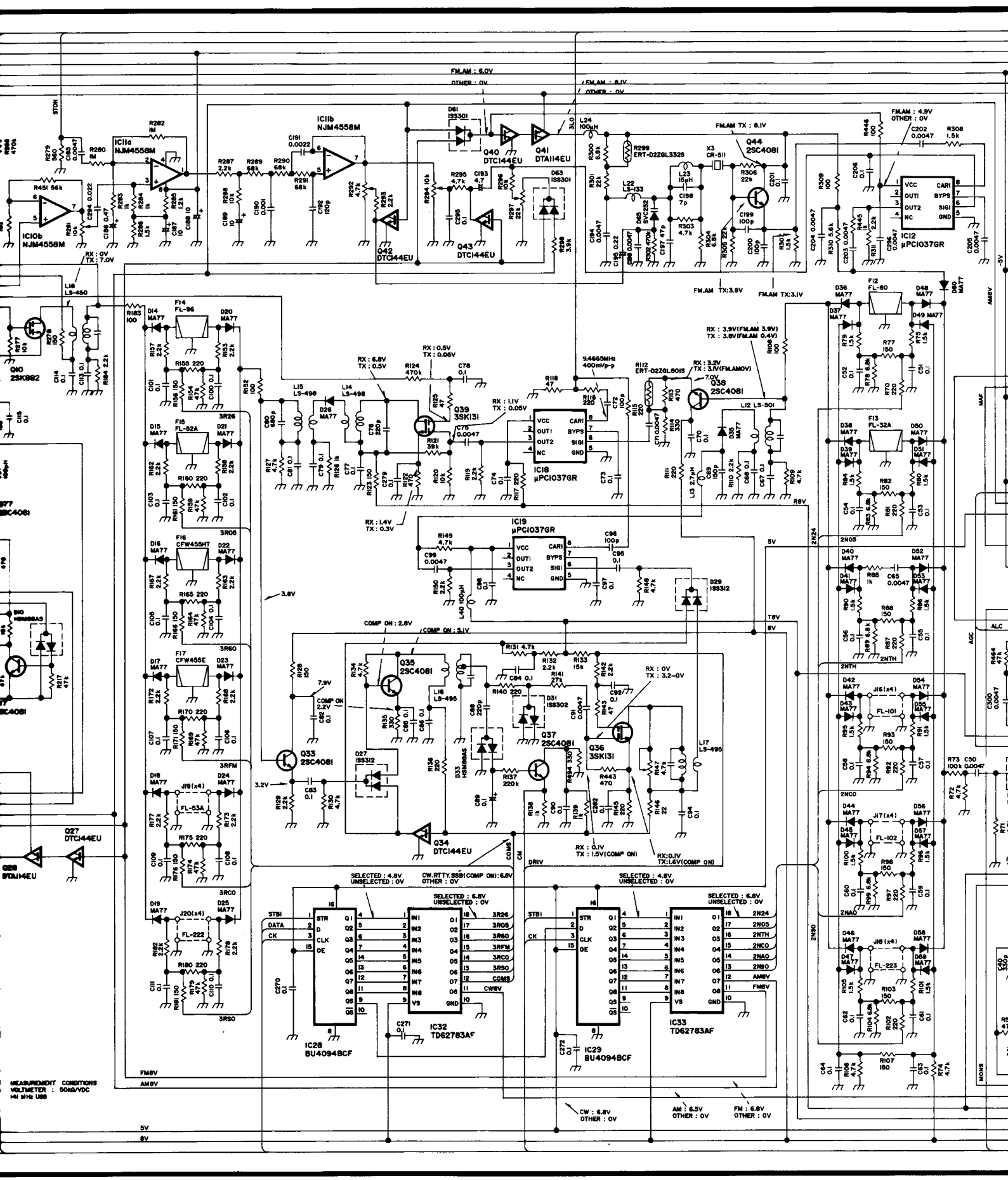

ManualsPlus.com

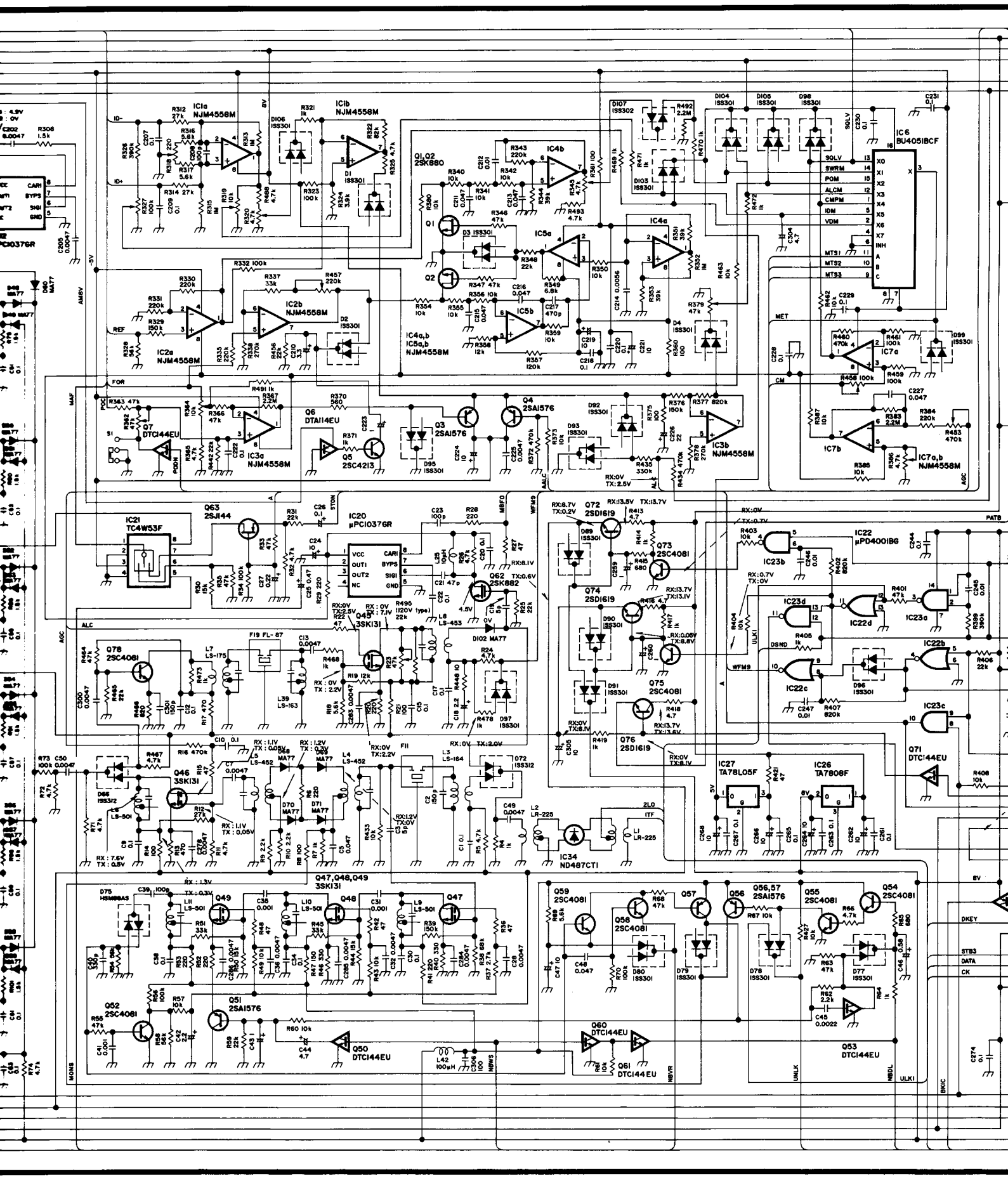

ManualsPlus.com

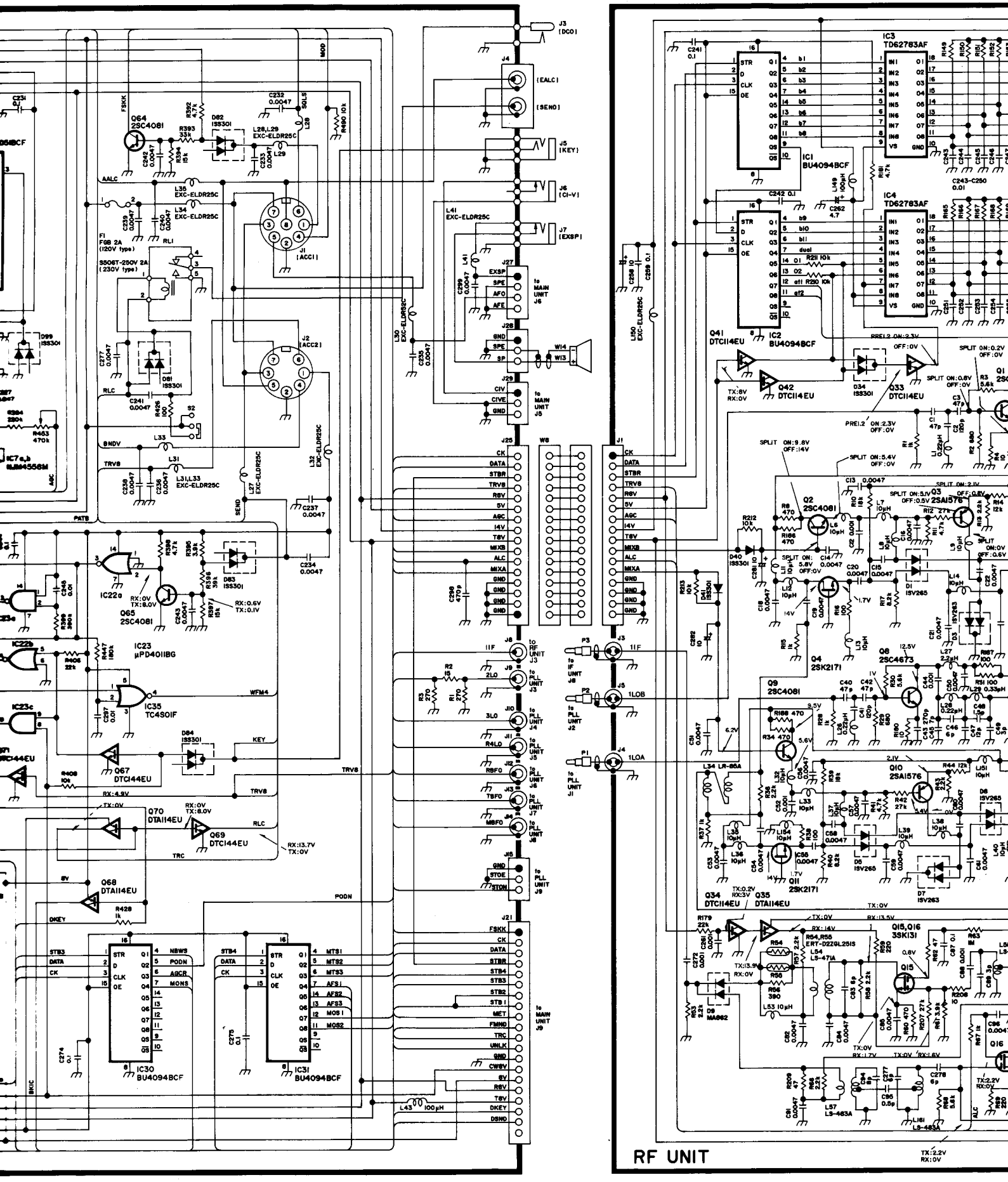

ManualsPlus.com

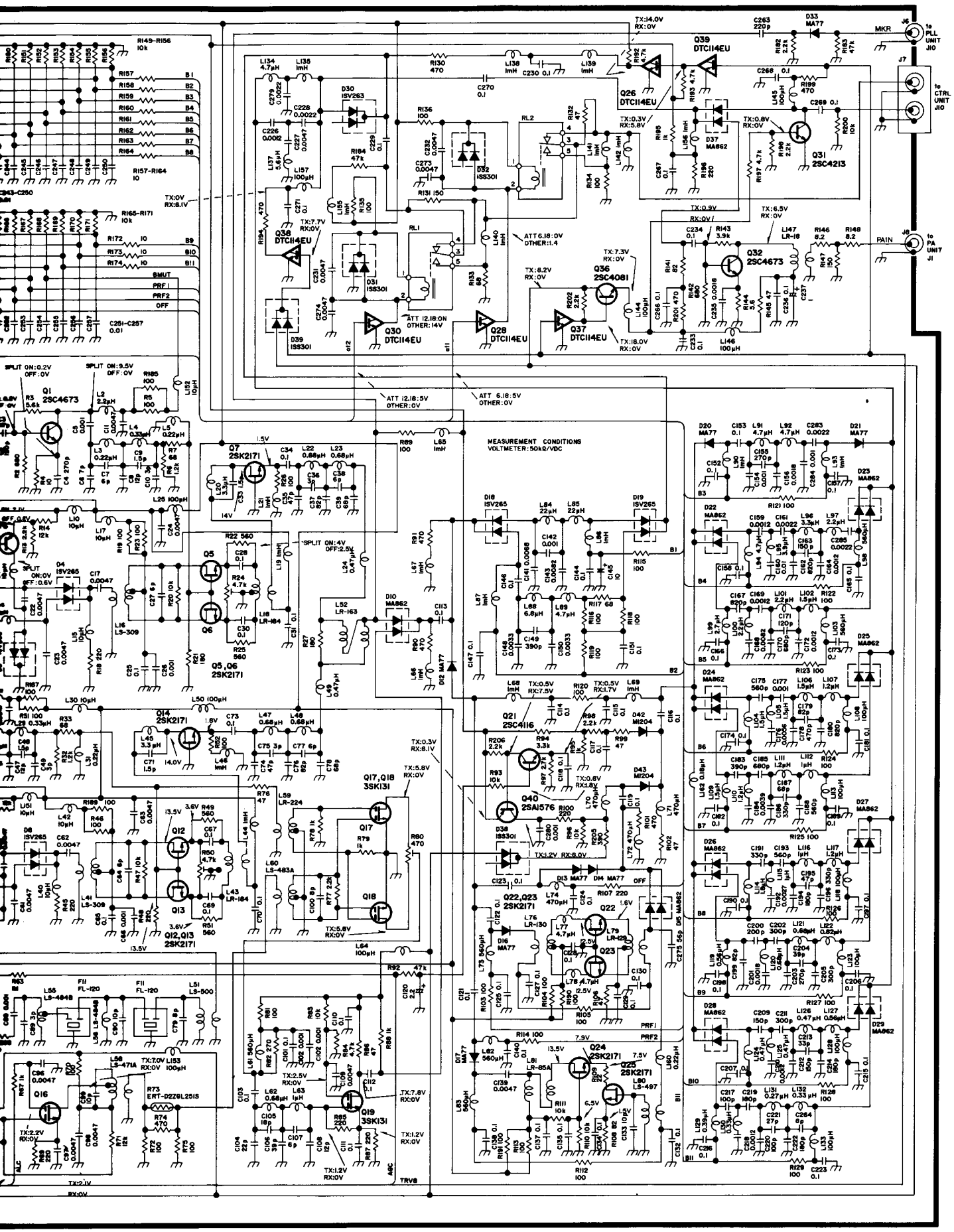

ManualsPlus.com

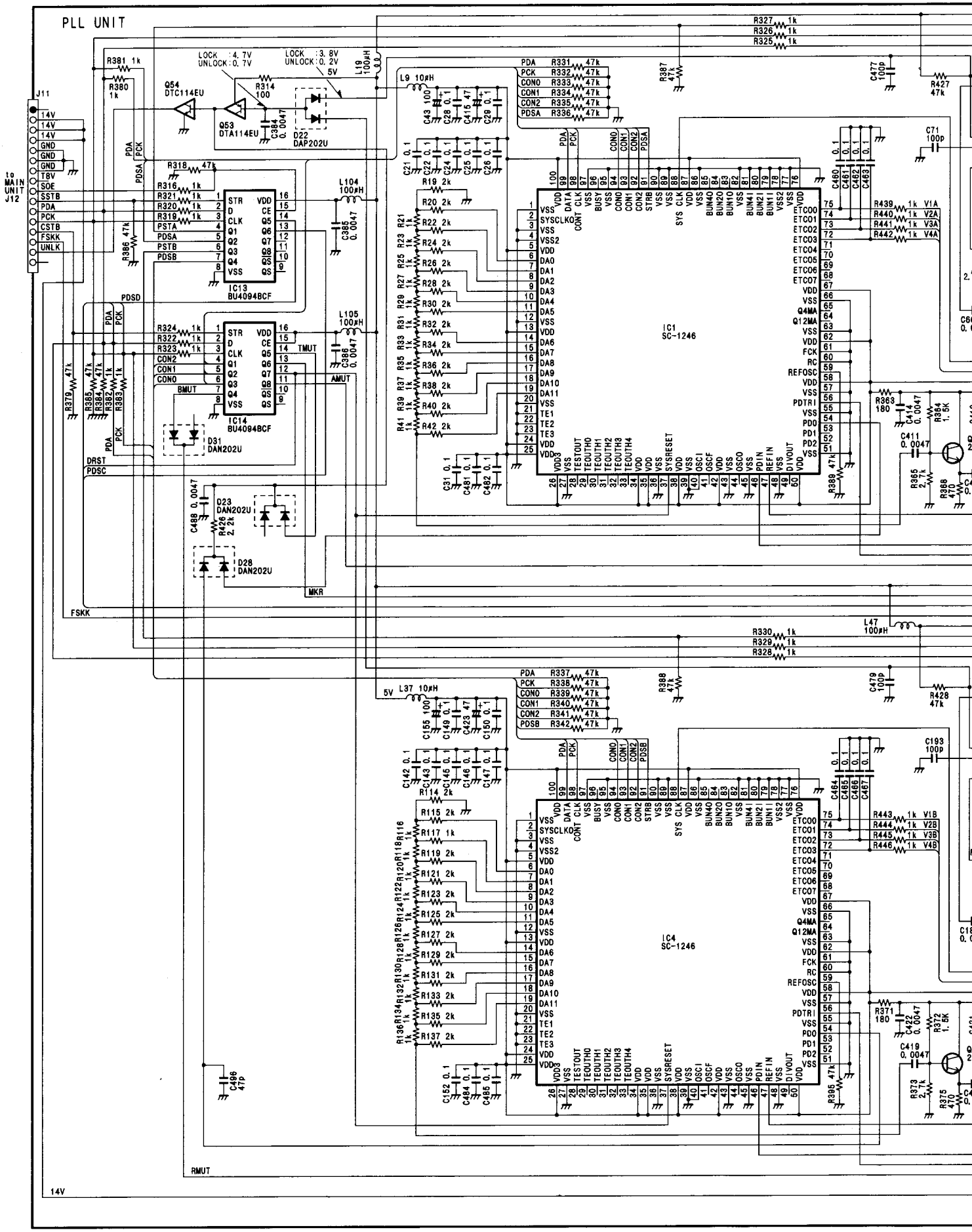

ManualsPlus.com

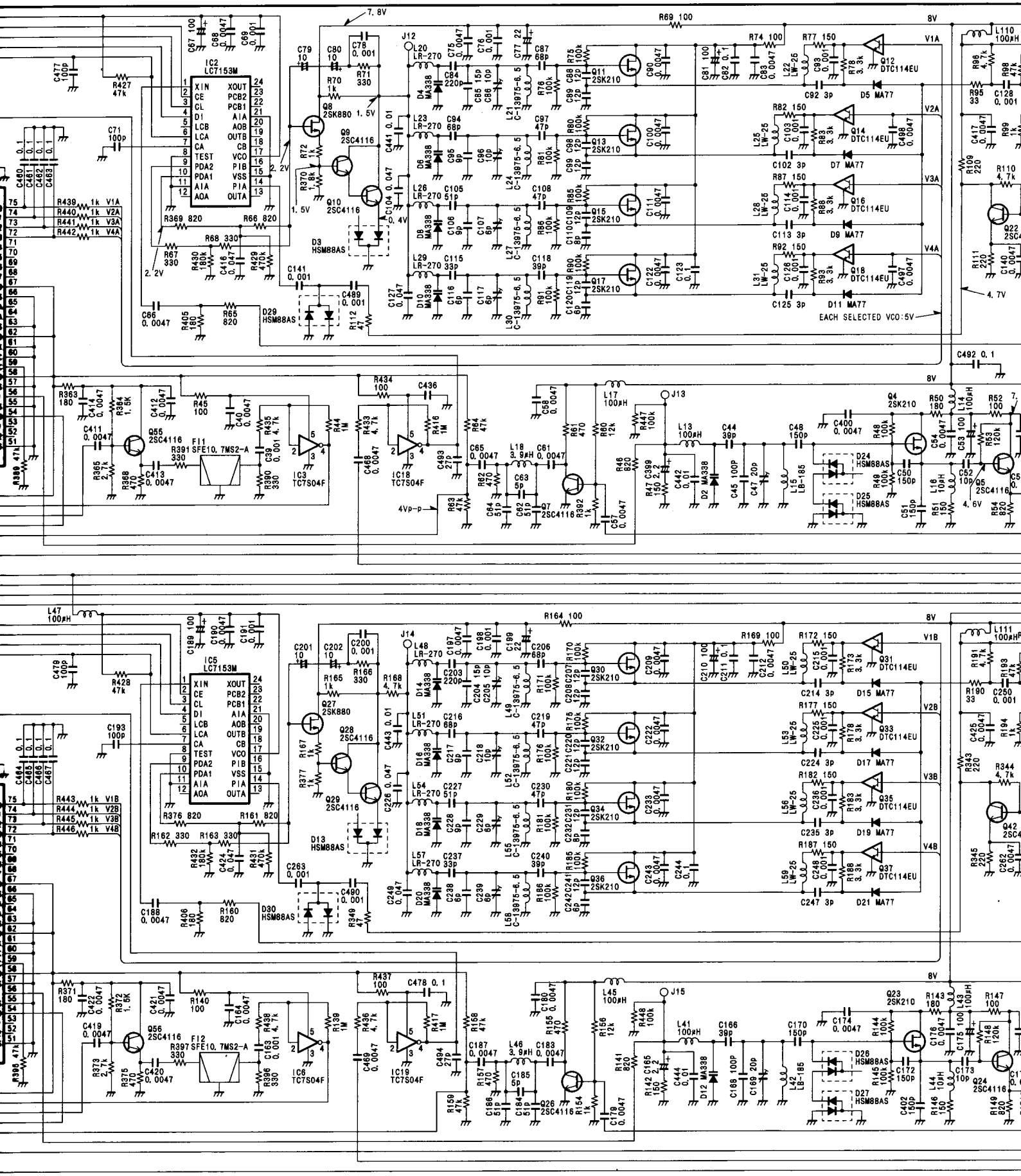

ManualsPlus.com

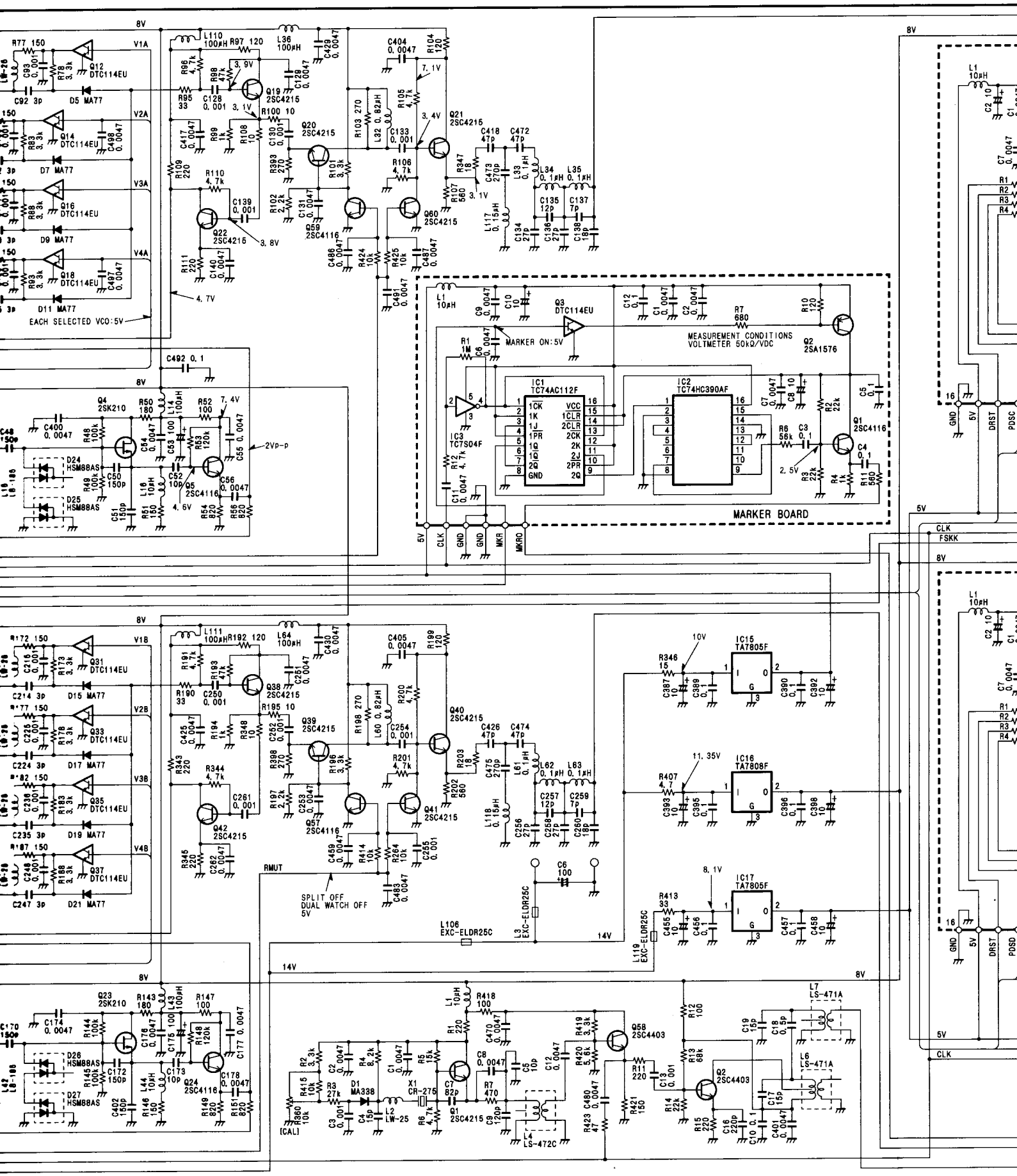

ManualsPlus.com

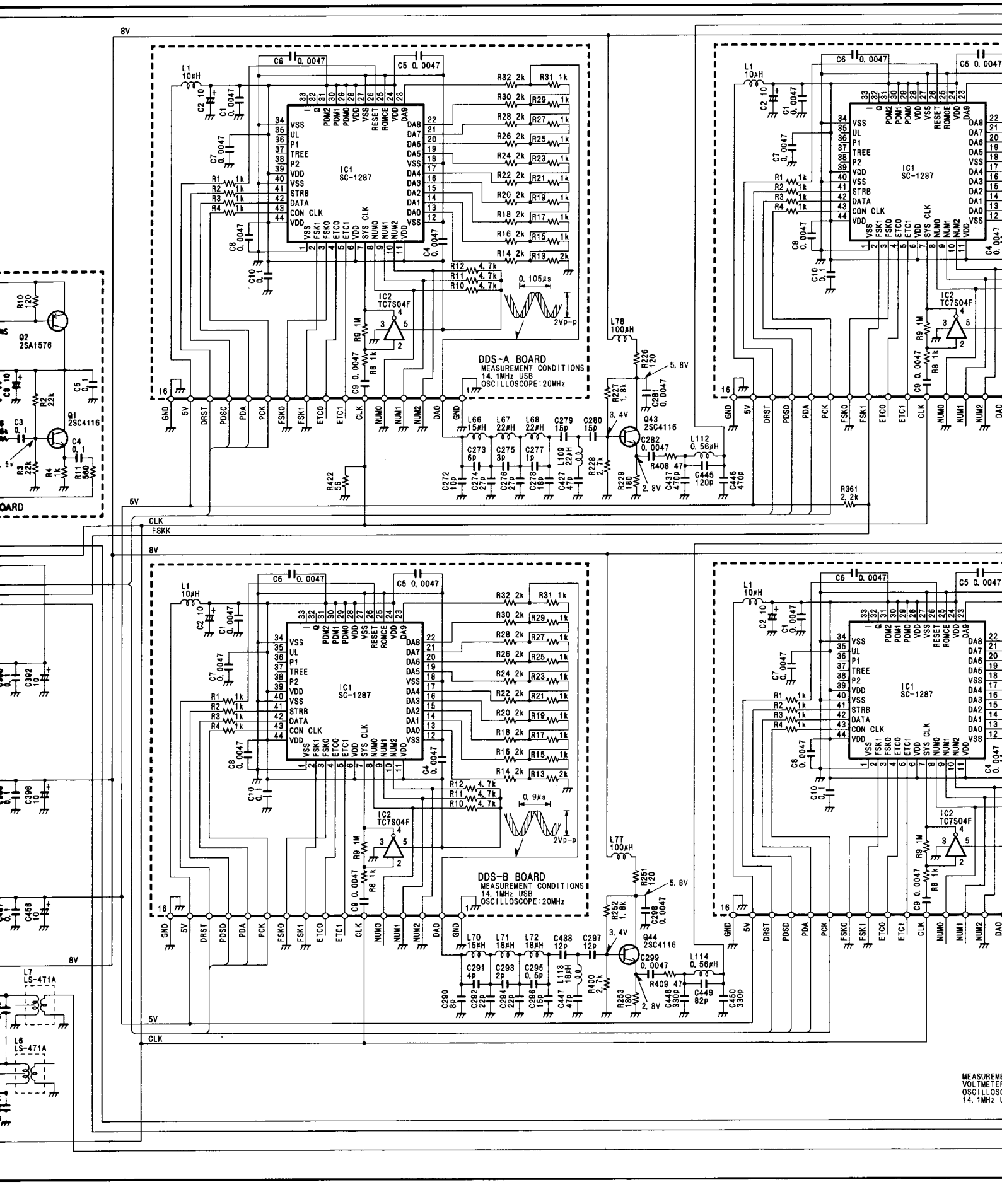

ManualsPlus.com

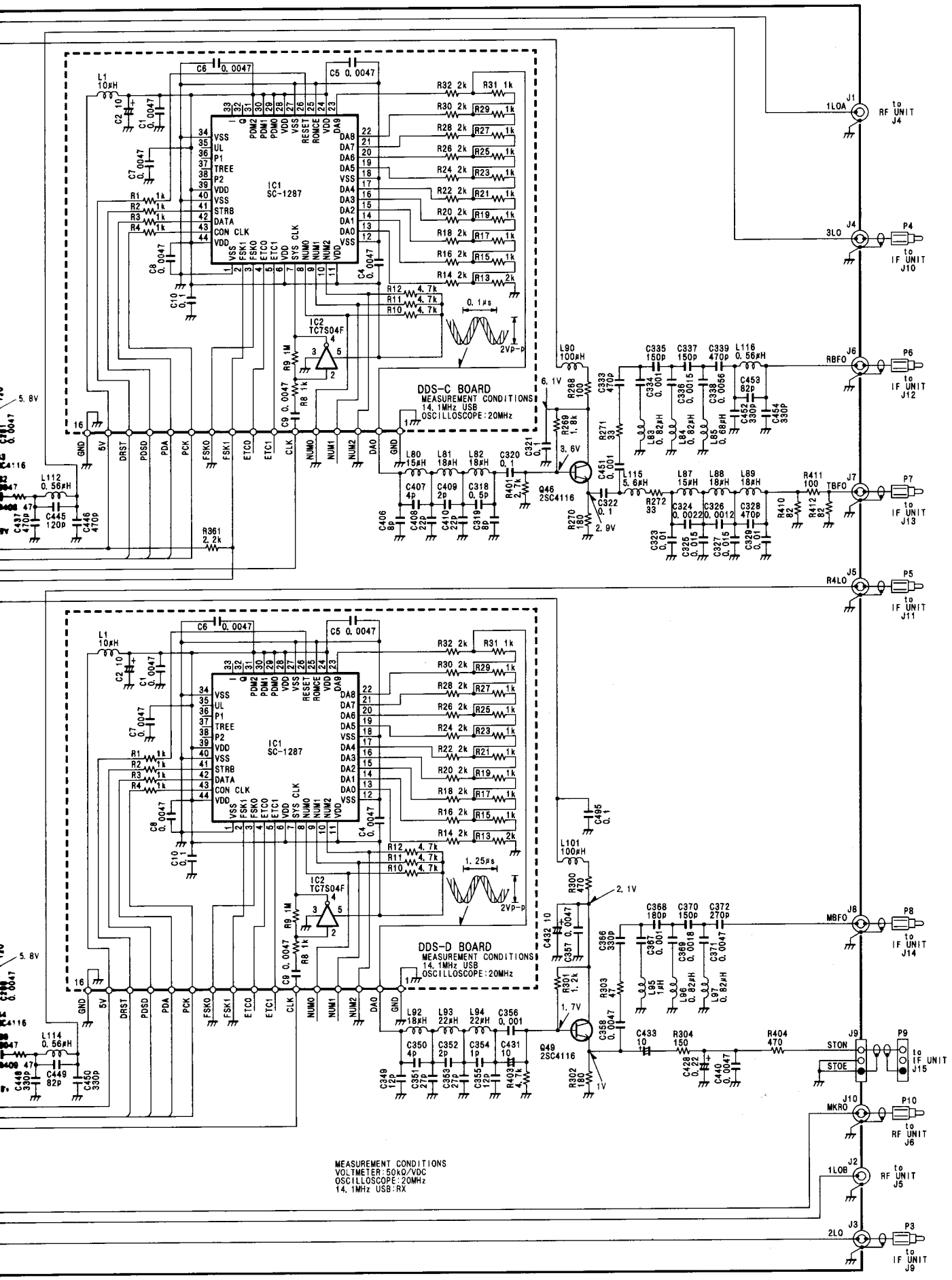

ManualsPlus.com

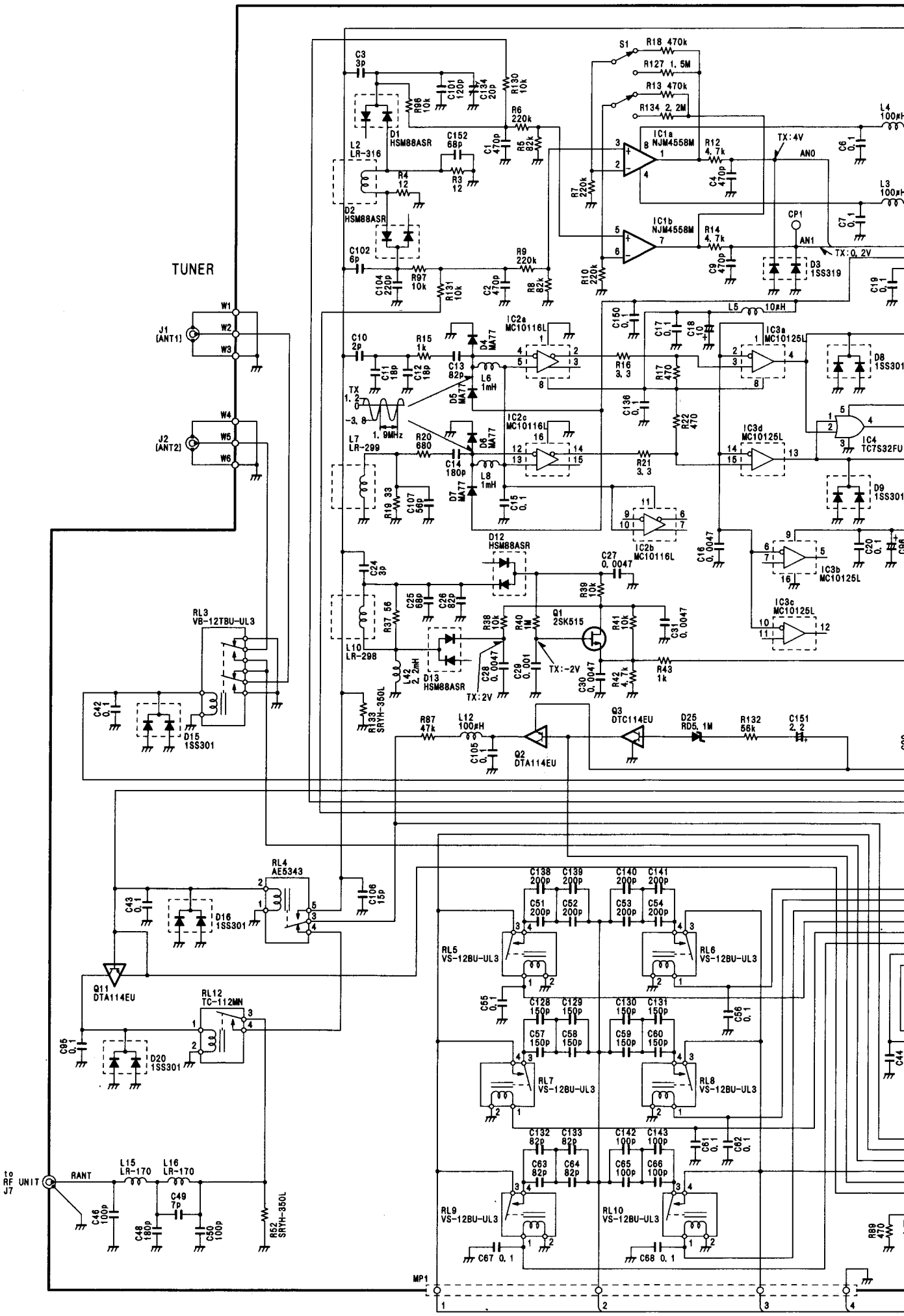

ManualsPlus.com

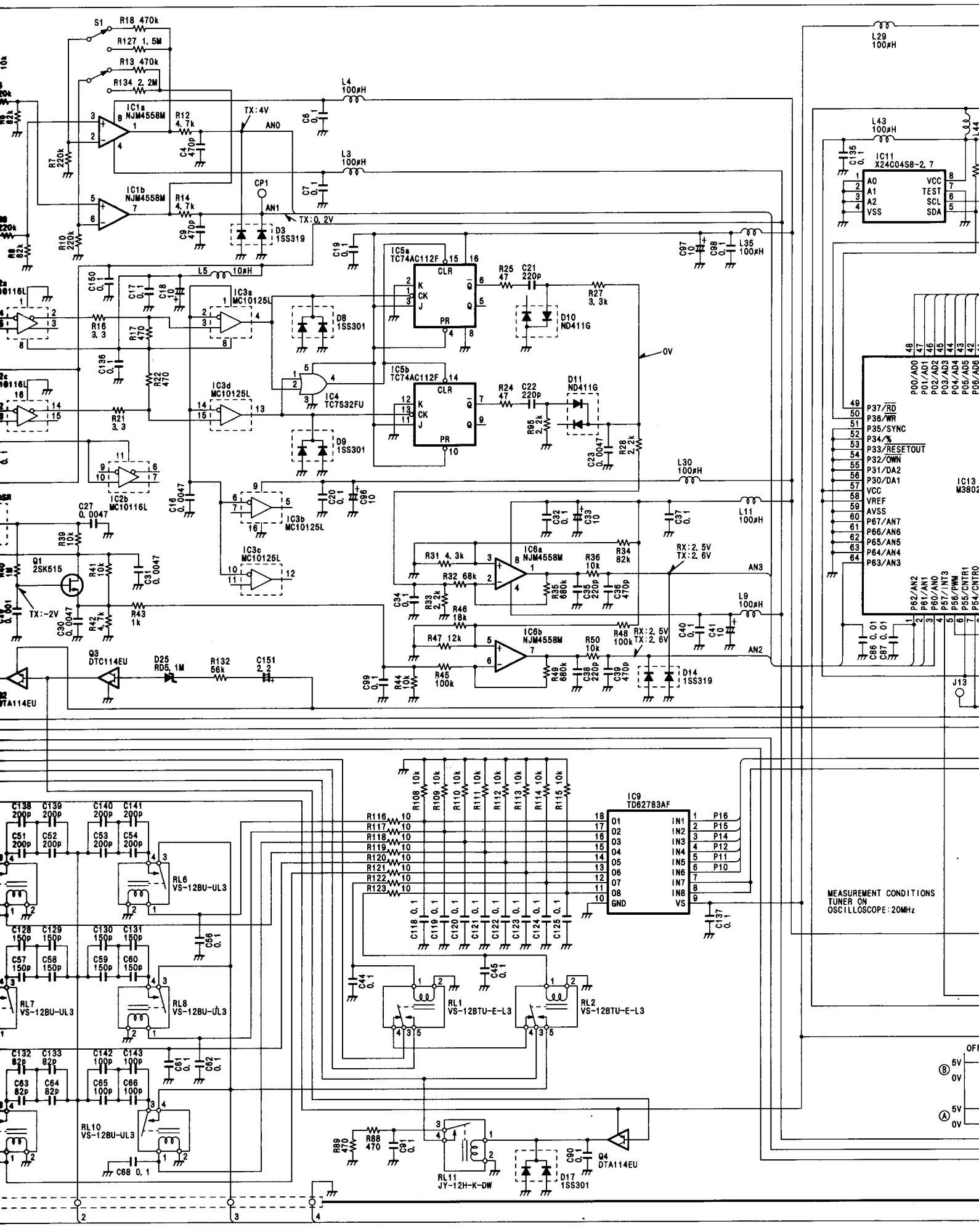

ManualsPlus.com

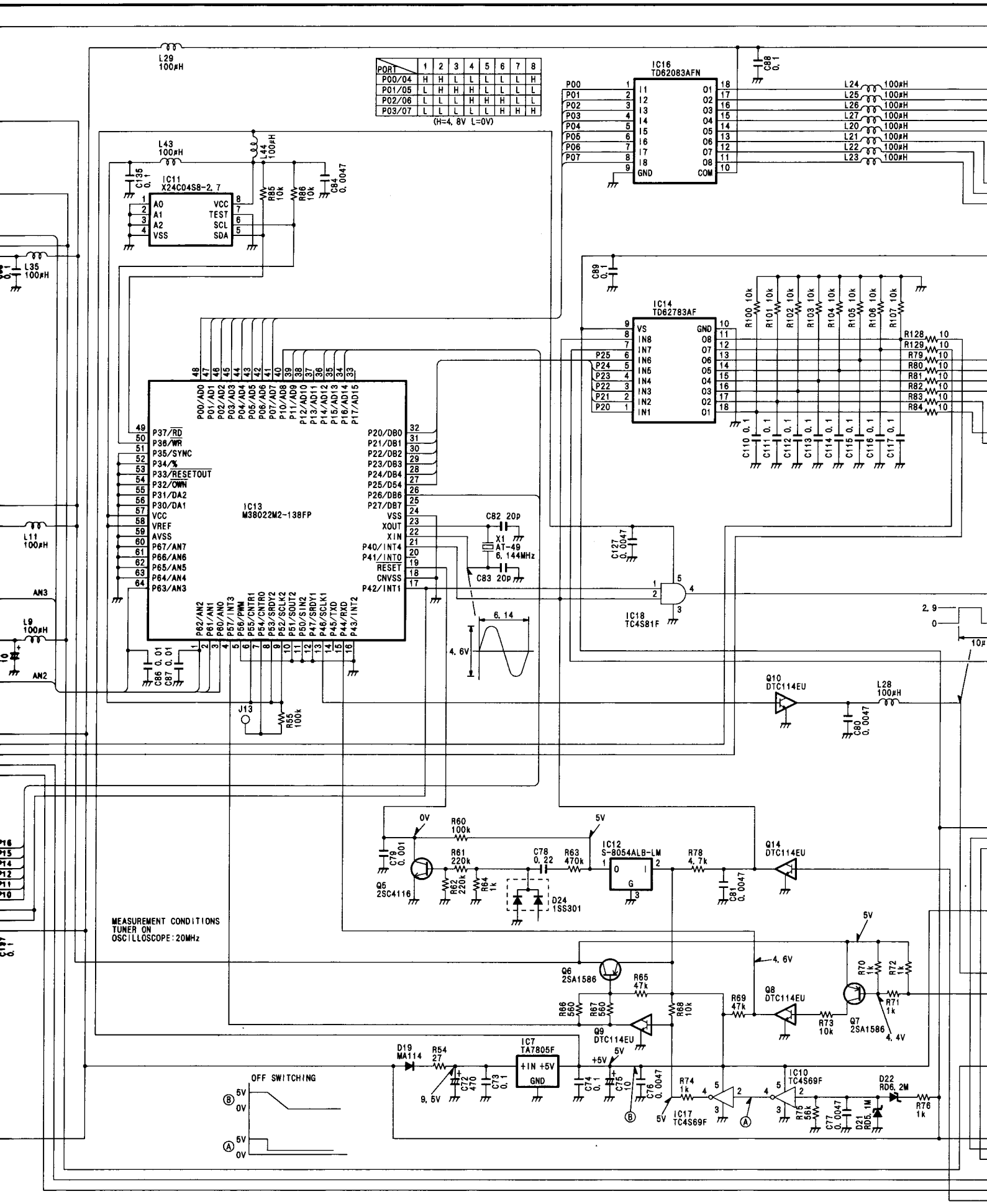

PORT	1	2	3	4	5	6	7	8
P00/04	H	H	L	L	L	L	L	H
P01/05	L	H	H	H	L	L	L	L
P02/06	L	L	L	H	H	H	L	L
P03/07	L	L	L	L	L	H	H	H

(H=4.8V L=0V)

CTRL UNIT

ManualsPlus.com

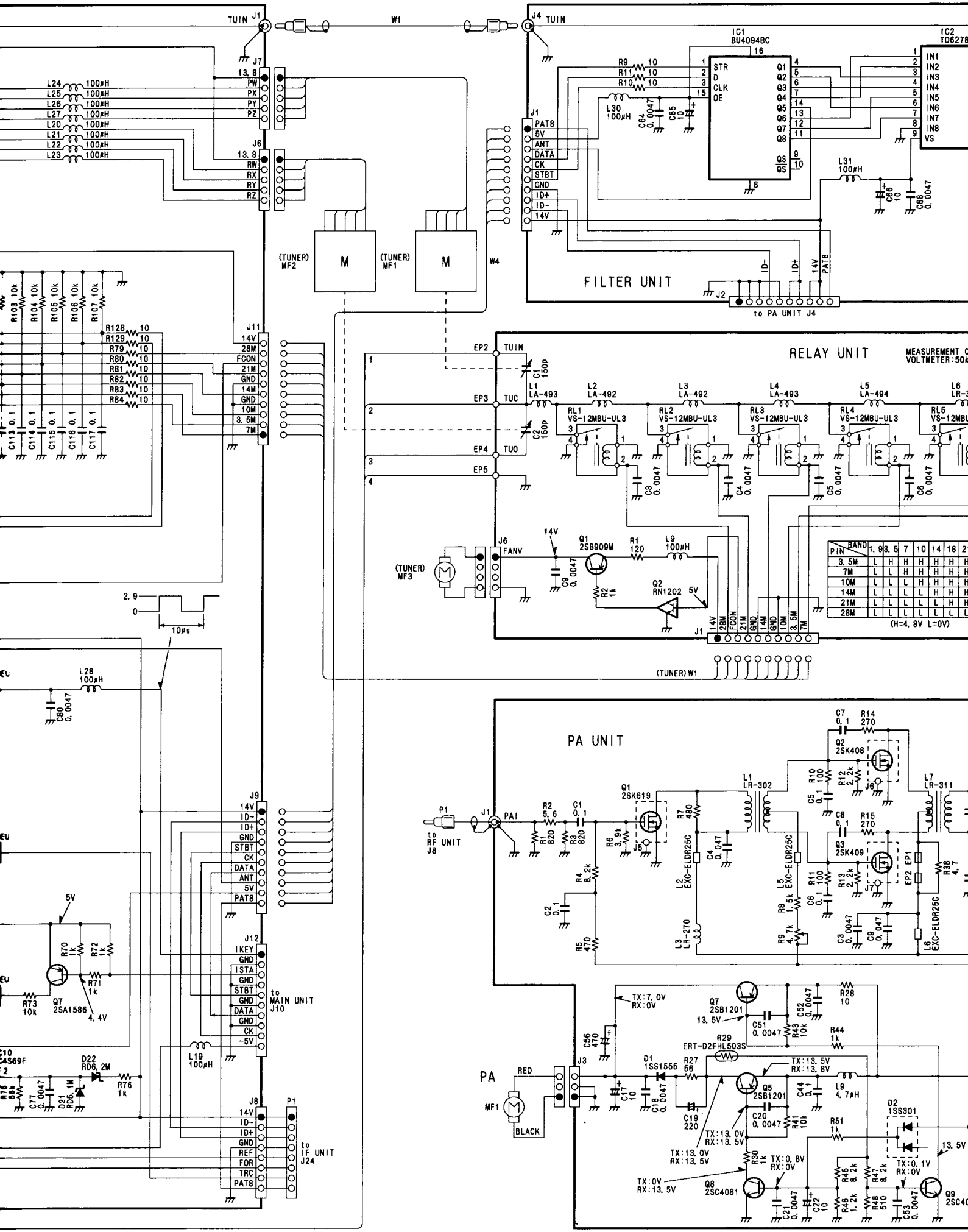

ManualsPlus.com

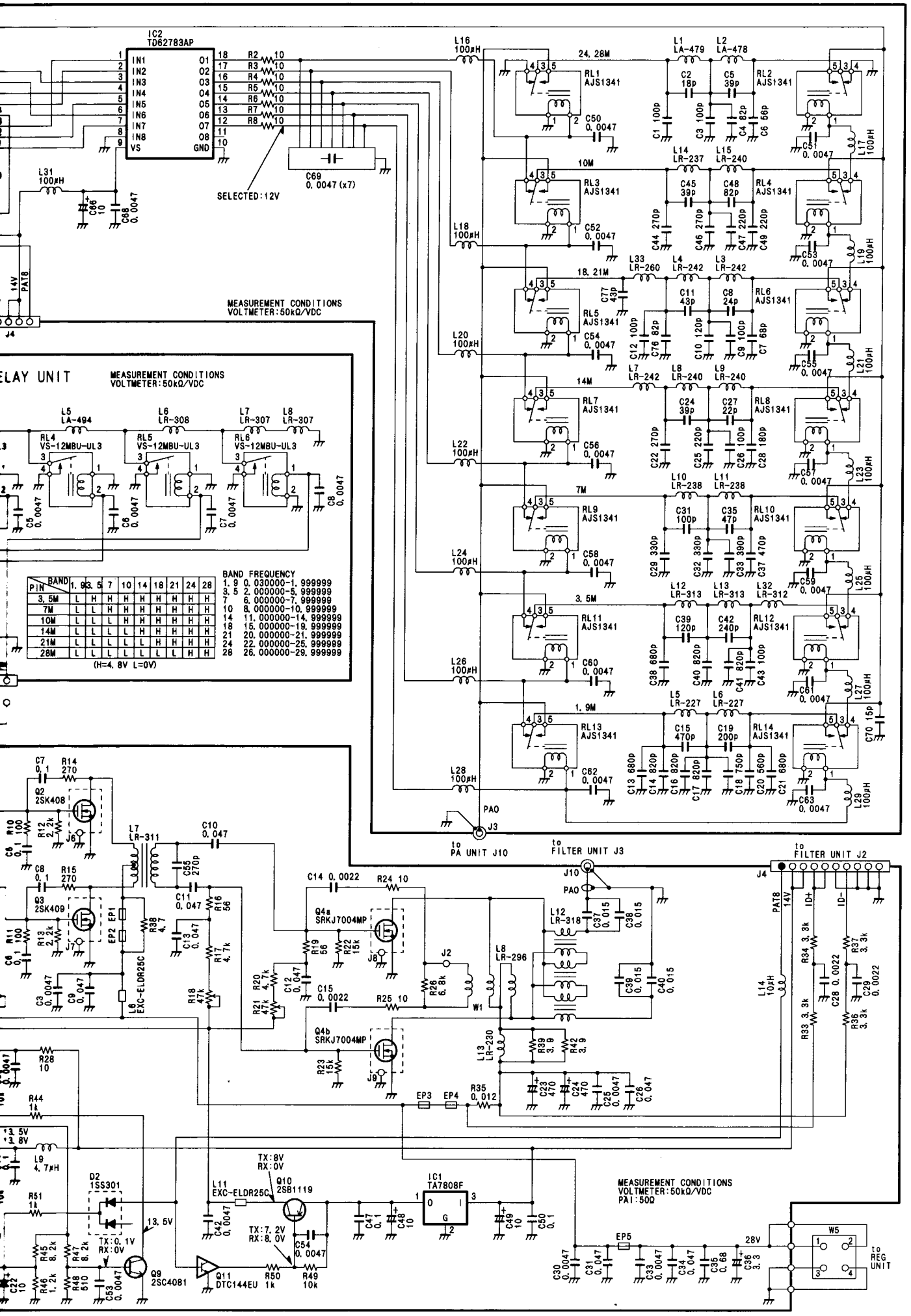

ManualsPlus.com

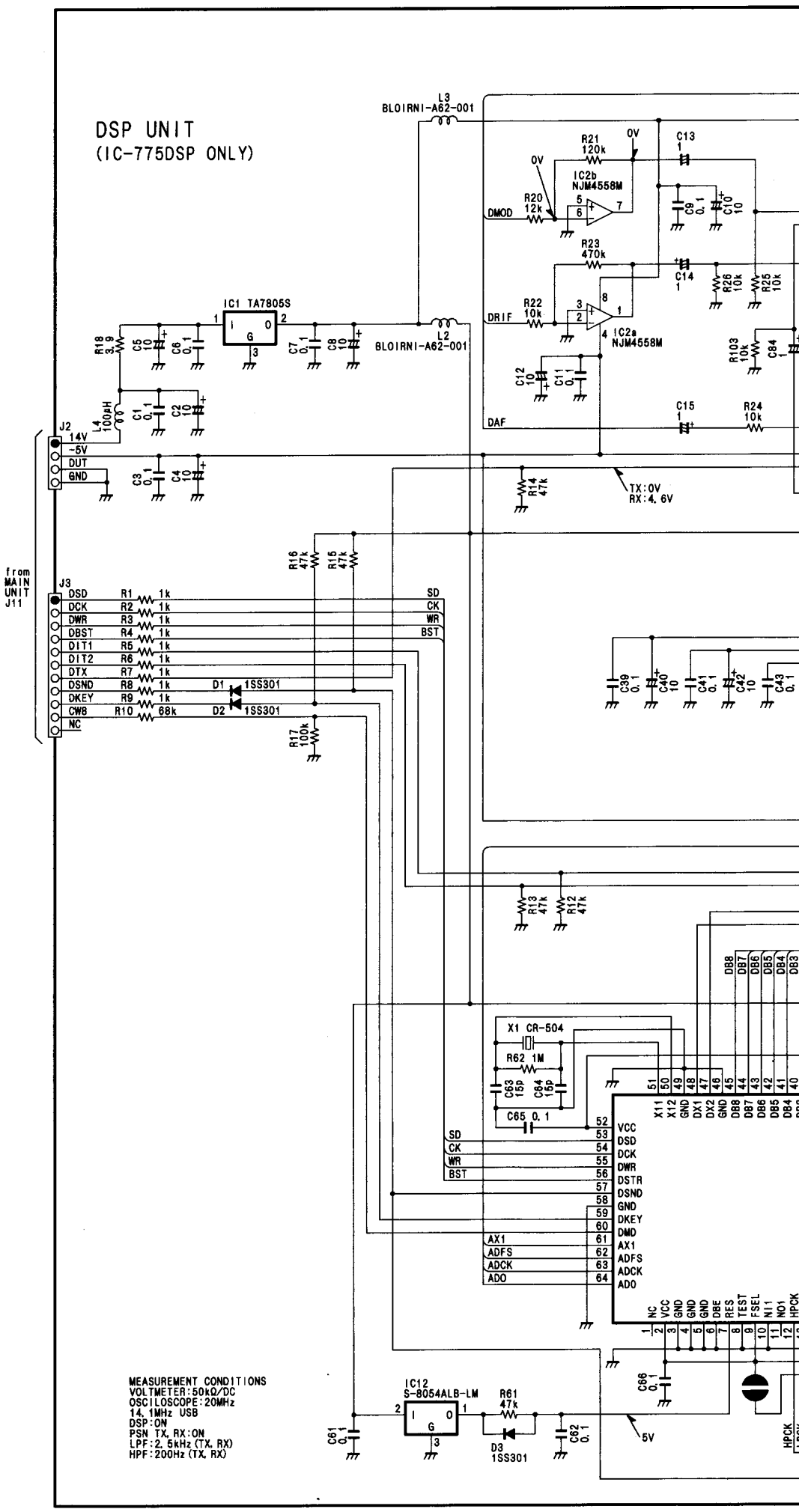

ManualsPlus.com

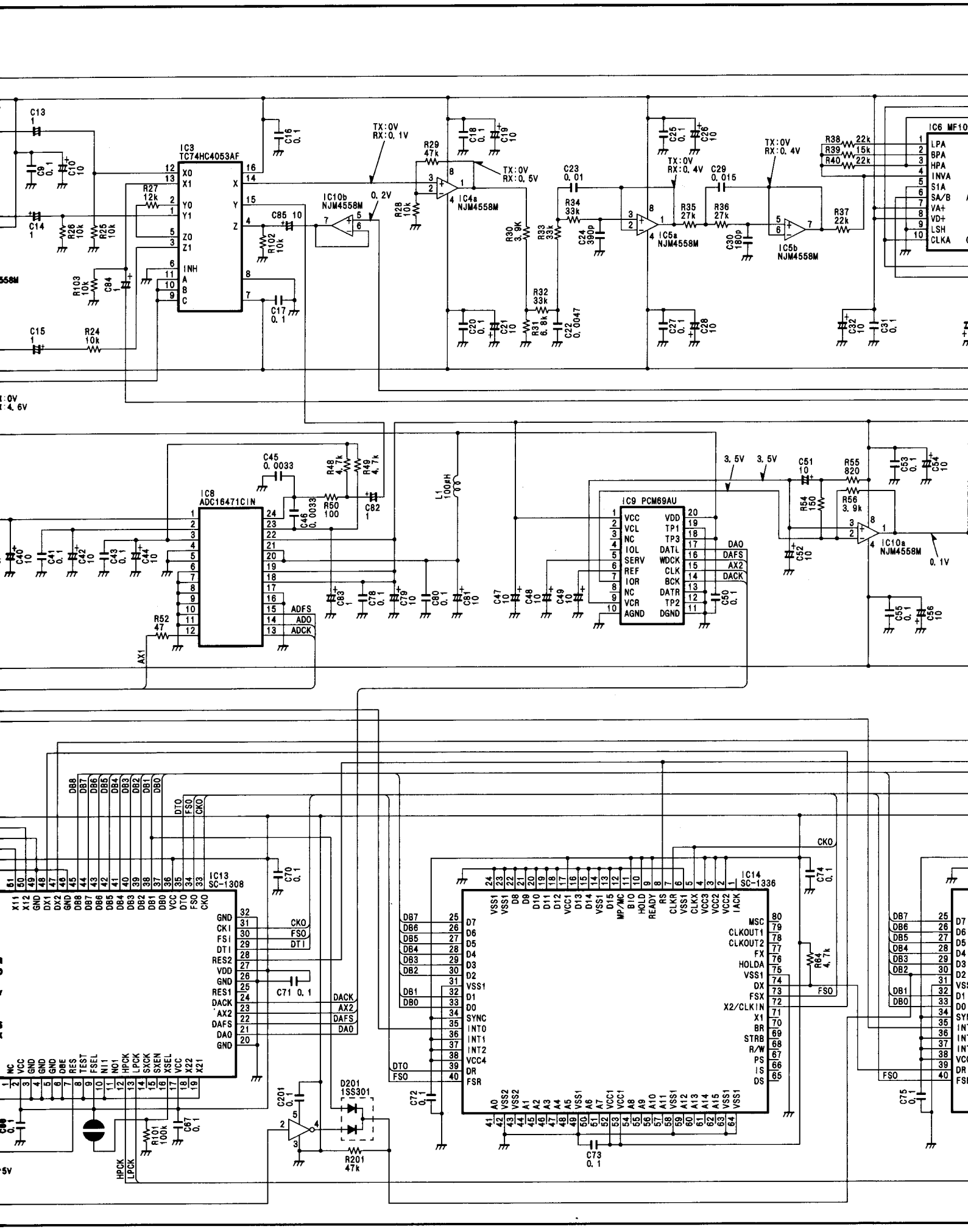

ManualsPlus.com

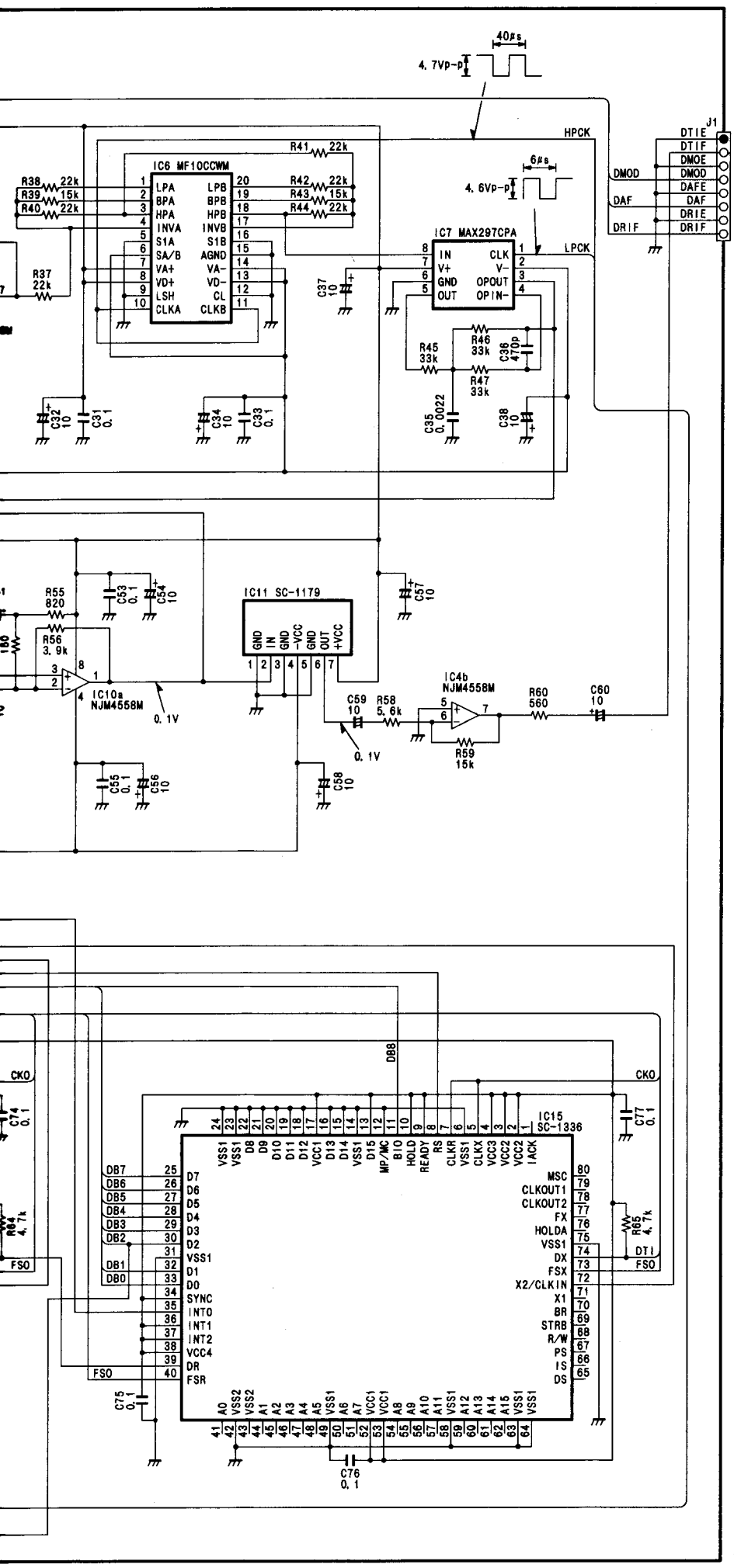

ManualsPlus.com

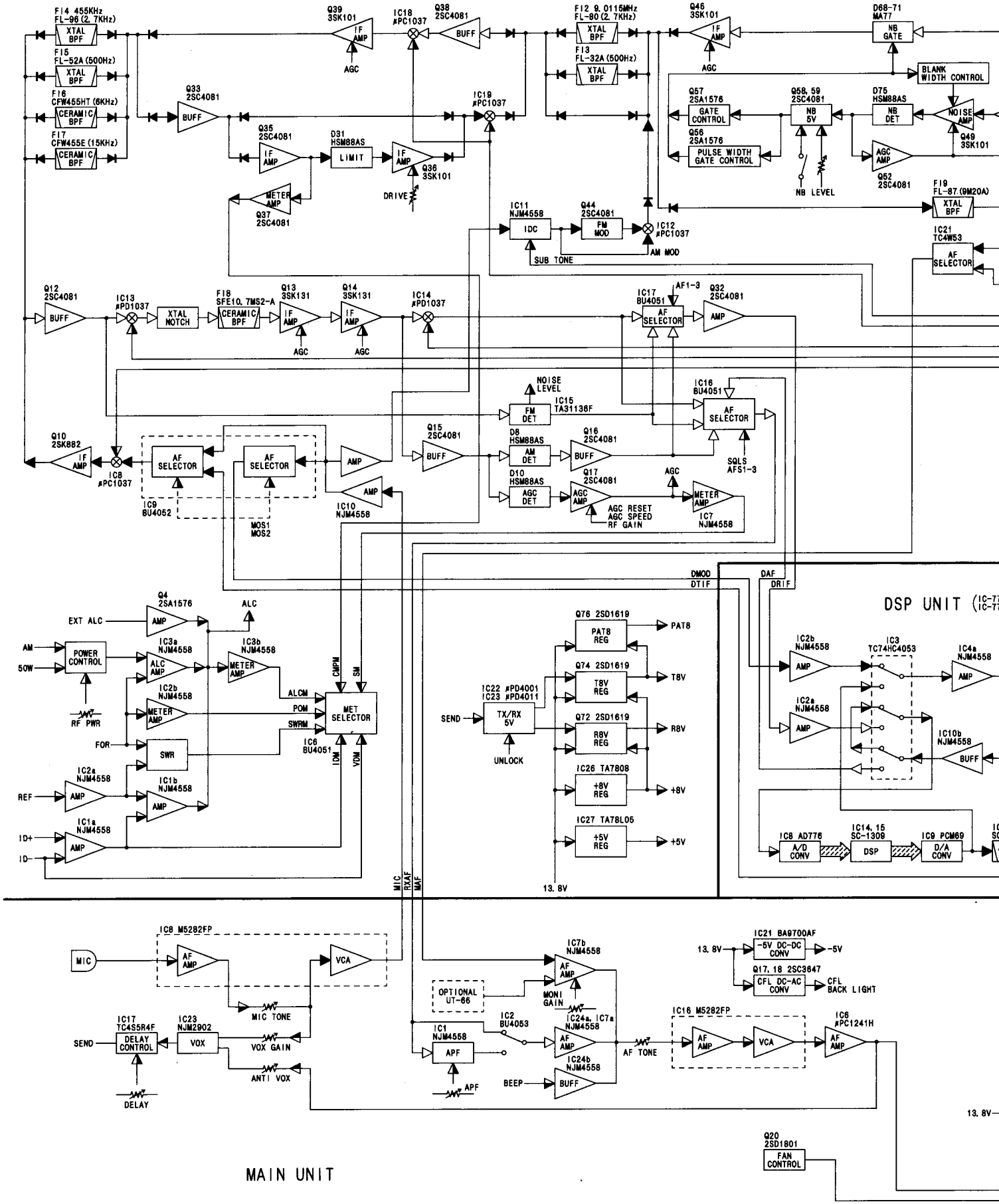

ManualsPlus.com

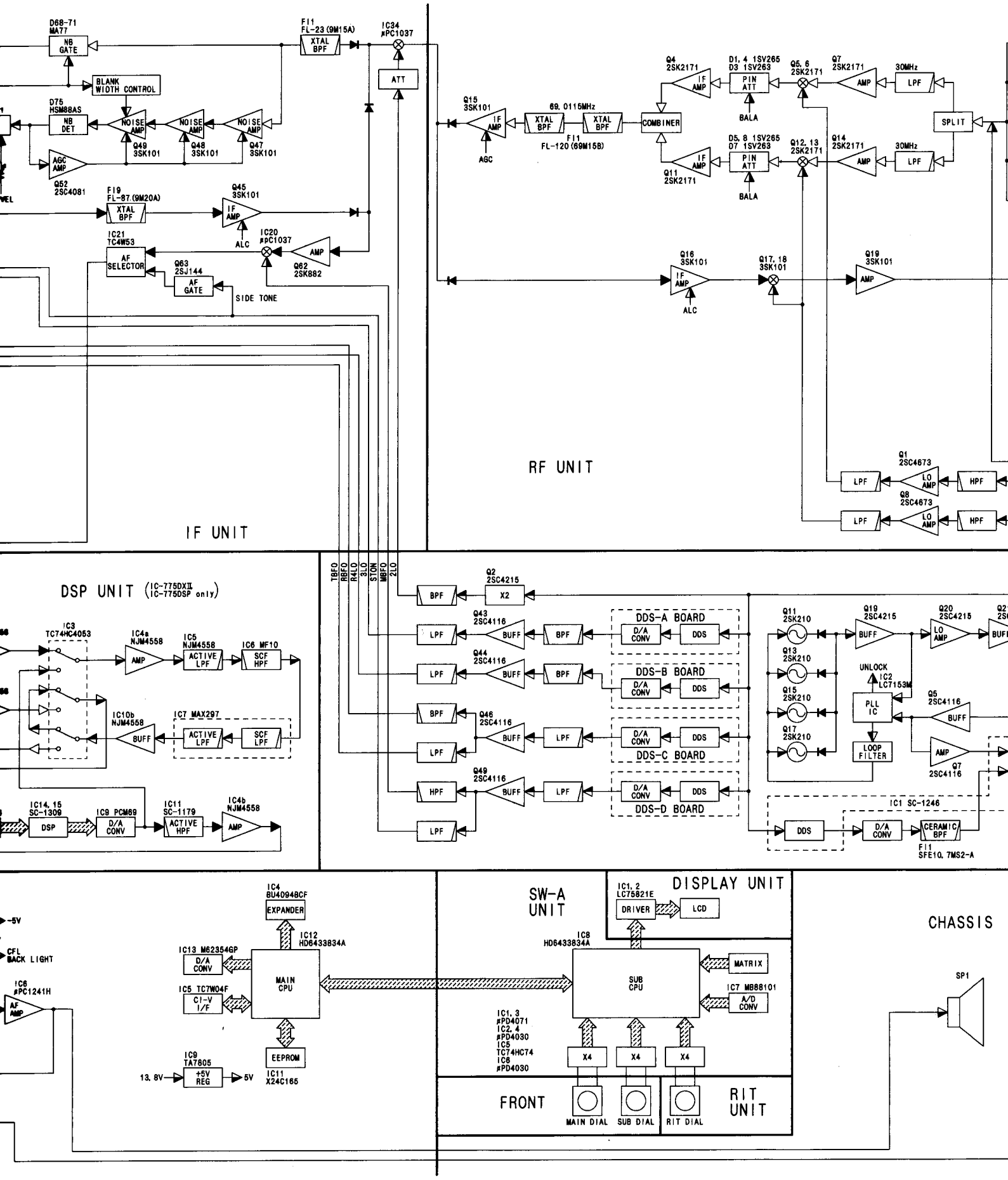

ManualsPlus.com

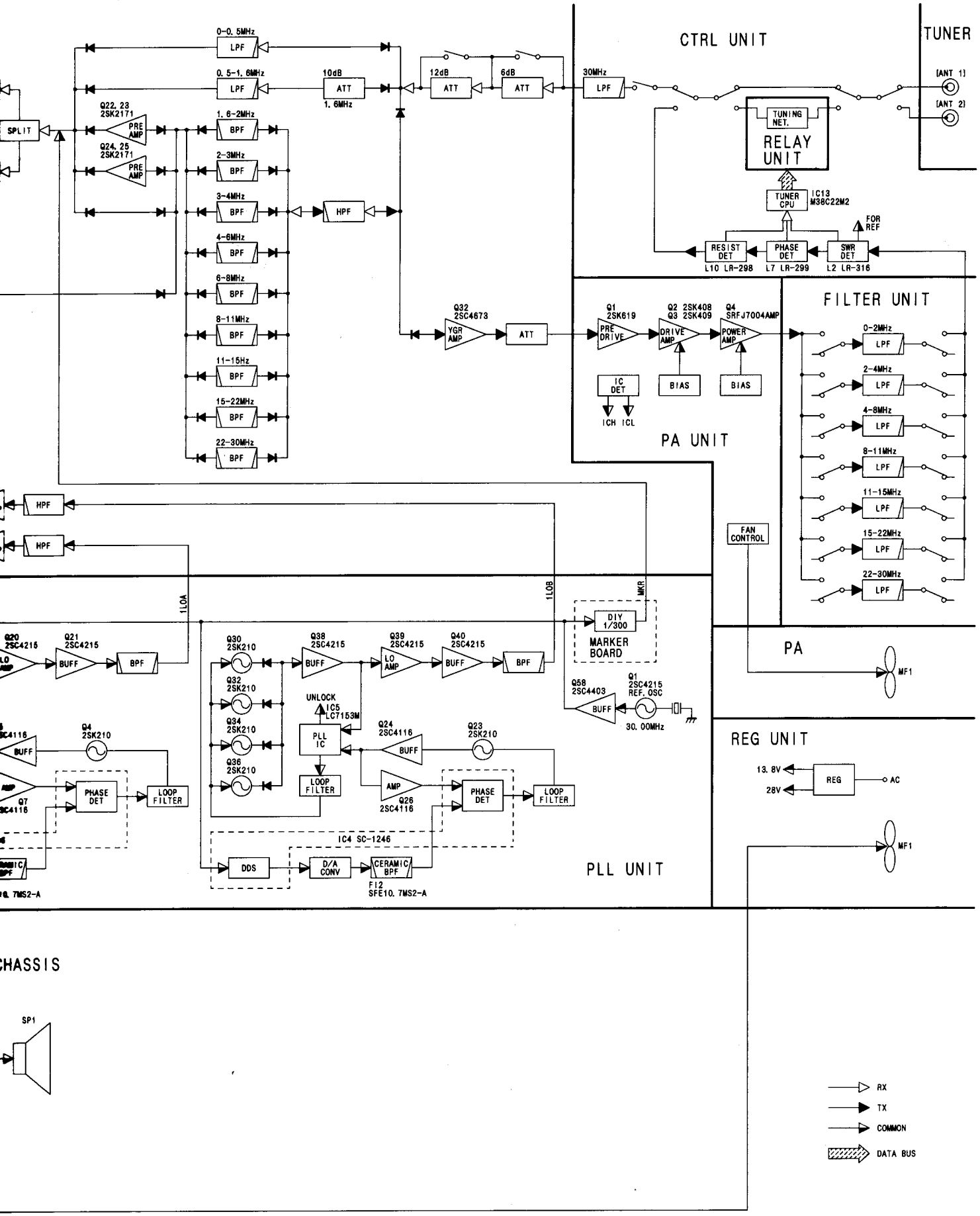

ManualsPlus.com

Icom Inc.

6-9-16, Kamihigashi, Hirano-ku, Osaka 547, Japan
Phone: 06 793 5302
Fax : 06 793 0013
Telex : 05277822 ICOMTR J

Icom America Inc.

<Corporate Headquarters>
2380 116th Avenue N.E., Bellevue, WA 98004, U.S.A.
Phone : (206) 454-8155
Fax : (206) 454-1509
Telex : 152210 ICOM AMER BVUE

<Customer Service>
Phone : (206) 454-7619

<Regional Customer Service Center>
18102 Sky Park SouthI, Suite 52-B, Irvine, CA 92714, U.S.A.
Phone : (714) 852-8026
Fax : (714) 852-8716

Icom Canada

A Division of Icom America Inc.
3071 #5 Road, Unit 9, Richmond, B.C., V6X 2T4, Canada
Phone : (604) 273-7400
Fax : (604) 273-1900

Icom (Europe) GmbH

Communication Equipment
Himmelgeister Str. 100, D-40225 Düsseldorf, Germany
Phone : 0211 346047
Fax : 0211 333639

Icom (Australia) Pty. Ltd.

A.C.N 006 092 575
7 Duke Street, Windsor, Victoria, 3181, Australia
Phone : 03 9529 7582
Fax : 03 9529 8485

Icom (UK) Ltd.

Unit 9, Sea St., Herne Bay, Kent, CT6 8LD, U.K.
Phone : 01227 741741
Fax : 01227 741742
Telex : 965179 ICOM G

Icom France S.a

Zac de la Plaine, Rue Brindejonc des Moulinais
BP 5804, 31505 Toulouse Cedex, France
Phone : 61. 36. 03. 03
Fax : 61. 36. 03. 00
Telex : 521515 ICOM FRA

Count on us!

ManualsPlus.com

Icom Inc.
6-9-16, Kamihigashi, Hirano-ku, Osaka 547, Japan

A-5340H-S
Printed in Japan
Copyright © 1995 by Icom Inc.