ManualsPlus.com

ICOM

SERVICE MANUAL

IC-μ4A/AT/E

430/440 MHz FM TRANSCEIVER

ICOM INCORPORATED

ManualsPlus.com

SCOPE OF THE SERVICE MANUAL

This service manual covers all service information related to the theoretical, physical, mechanical and electrical characteristics of the IC-μ4A/AT/E 430/440 MHz FM TRANSCEIVER.

IC-μ4A

IC-μ4AT

IC-μ4E

ASSISTANCE

If you require assistance or further information regarding the operation, capability and servicing of the IC-μ4A/AT/E, contact your nearest authorized ICOM Dealer or ICOM Service Center. Addresses are provided on the inside back cover for your convenience.

Four separate versions of the IC-μ4A/AT/E have been designed. This service manual covers every version. When using the manual each model can be referred to by the following assigned version numbers:

MODEL	VERSION NUMBER	AREA
IC-μ4E	#04	EUROPE
IC-μ4AT	#05	U.S.A.
IC-μ4A	#07	AUSTRALIA
IC-μ4AT	#09	SOUTHEAST ASIA

ORDERING REPLACEMENT PARTS

For faster, more efficient service include the following points when ordering parts or requesting information from your ICOM Service Center:

1. Equipment model and serial number
2. Schematic part identifier or service manual page number
3. Unit name and printed circuit board number (e.g., MAIN UNIT/B-1370B)
4. Component part number and name (e.g., 2SC3772 Transistor)
5. Quantity required (e.g., 10 pcs)

ManualsPlus.com

TABLE OF CONTENTS

SECTION 1 SPECIFICATIONS ..... 1 — 1

SECTION 2 OUTSIDE AND INSIDE VIEWS ..... 2 — 1 ~ 7

2 - 1 TOP VIEW ..... 2 — 1
2 - 2 FRONT AND SIDE VIEWS ..... 2 — 2
2 - 3 REAR AND BOTTOM VIEWS ..... 2 — 2
2 - 4 FRONT AND BOTTOM INSIDE VIEWS ..... 2 — 3
2 - 5 REAR INSIDE VIEWS ..... 2 — 6

SECTION 3 BLOCK DIAGRAM ..... 3 — 1

SECTION 4 CIRCUIT DESCRIPTION ..... 4 — 1 ~ 6

4 - 1 RECEIVER CIRCUITS ..... 4 — 1
4 - 2 TRANSMITTER CIRCUITS ..... 4 — 2
4 - 3 PLL CIRCUITS ..... 4 — 2
4 - 4 LOGIC CIRCUITS ..... 4 — 4
4 - 5 POWER SUPPLY CIRCUITS ..... 4 — 6
4 - 6 OTHER CIRCUITS ..... 4 — 6

SECTION 5 MECHANICAL PARTS AND DISASSEMBLY ..... 5 — 1 ~ 3

5 - 1 FRONT PANEL DISASSEMBLY ..... 5 — 1
5 - 2 SPEAKER DISASSEMBLY ..... 5 — 2
5 - 3 REAR CASE DISASSEMBLY ..... 5 — 2
5 - 4 TOP PANEL DISASSEMBLY ..... 5 — 3
5 - 5 TONE UNIT/TONE CALL UNIT DISASSEMBLY ..... 5 — 3

SECTION 6 MAINTENANCE AND ADJUSTMENT ..... 6 — 1 ~ 9

6 - 1 PREPARATION BEFORE SERVICING ..... 6 — 1
6 - 2 PLL ADJUSTMENT ..... 6 — 2
6 - 3 RECEIVER ADJUSTMENT ..... 6 — 4
6 - 4 TRANSMITTER ADJUSTMENT ..... 6 — 6
6 - 5 SUBAUDIBLE TONE, DTMF AND TONE CALL ADJUSTMENT ..... 6 — 8

SECTION 7 BOARD LAYOUTS ..... 7 — 1 ~ 11

7 - 1 INTERCONNECTIONS ..... 7 — 1
7 - 2 MAIN UNIT ..... 7 — 2
7 - 3 RF UNIT ..... 7 — 4
7 - 4 VCO UNIT ..... 7 — 6
7 - 5 TONE CALL AND TONE CALL UNITS ..... 7 — 8
7 - 6 DTMF AND PTT UNITS ..... 7 — 10

SECTION 8 VOLTAGE DIAGRAMS ..... 8 — 1 ~ 5

8 - 1 MAIN UNIT ..... 8 — 1
8 - 2 RF UNIT ..... 8 — 2
8 - 3 VCO UNIT ..... 8 — 3
8 - 4 TONE CALL UNIT [IC-μ4E ONLY] ..... 8 — 3
8 - 5 TONE UNIT [IC-μ4AT ONLY] ..... 8 — 4
8 - 6 DTMF UNIT [IC-μ4AT ONLY] ..... 8 — 4
8 - 7 UT-37 OPTIONAL TONE SQUELCH UNIT ..... 8 — 5

SECTION 9 PARTS LIST ..... 9 — 1 ~ 6

The SCHEMATIC DIAGRAM is attached at the end of this service manual.

ManualsPlus.com

SECTION 1 SPECIFICATIONS

GENERAL

Frequency coverage :

MODEL	VERSION NUMBER	AREA	OPERATIONAL RANGE
IC-μ4E	#04	EUROPE	430.0000~439.9875 MHz
IC-μ4AT	#05	U.S.A.	440.0000~449.9950 MHz
IC-μ4A	#07	AUSTRALIA	430.0000~439.9950 MHz
IC-μ4AT	#09	SOUTHEAST ASIA	430.0000~439.9950 MHz

Frequency resolution	:	IC-μ4A/AT 5 kHz IC-μ4E 12.5 kHz
Antenna impedance	:	50Ω unbalanced
Usable temperature range	:	−10°C~+60°C
Frequency stability	:	±10 ppm at −10°C~+60°C
Current drain at 8.4 V DC	:	Receiving — Power saved — Approx. 8 mA
		Receiving — At max. autio output — Max. 170 mA
		Transmitting — High (1.0 W) — Max. 700 mA
		Transmitting — Low (0.1 W) — Max. 350 mA
Dimensions (with BP-22)	:	58 (61) W × 140 (148) H × 29 (33) D mm
		Bracketed values include projections.
Weight	:	340 g

TRANSMITTER

Output power	:	HIGH 1.0 W LOW 0.1 W
Emission mode	:	F3 (FM)
Modulation system	:	Variable reactance frequency modulation
Max. frequency deviation	:	±5 kHz
Spurious emissions	:	More than 60 dB below carrier output power

RECEIVER

Receiving system	:	Double-conversion superheterodyne
Intermediate frequencies		1st 23.15 MHz 2nd 455 kHz
Sensitivity	:	Less than 0.25 μV (−119 dBm) for 12 dB SINAD
Squelch sensitivity (Threshold)	:	Less than 0.1 μV (−127 dBm)
Spurious response rejection ratio	:	More than 60 dB
Audio output power	:	More than 0.25 W at 10% distortion with an 8Ω load

ManualsPlus.com

SECTION 2 OUTSIDE AND INSIDE VIEWS

2-1 TOP VIEW

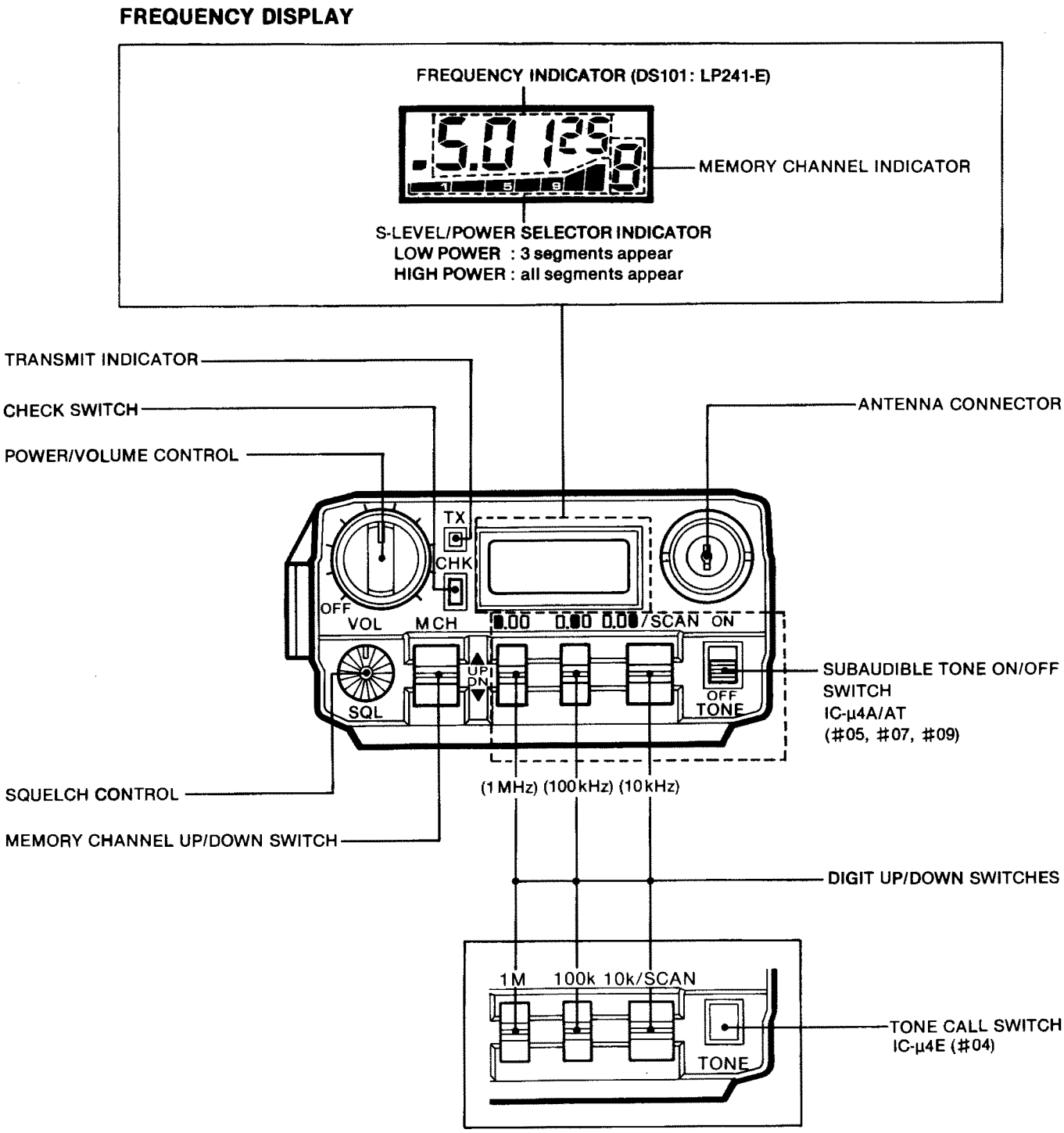

ManualsPlus.com

2-2 FRONT AND SIDE VIEWS

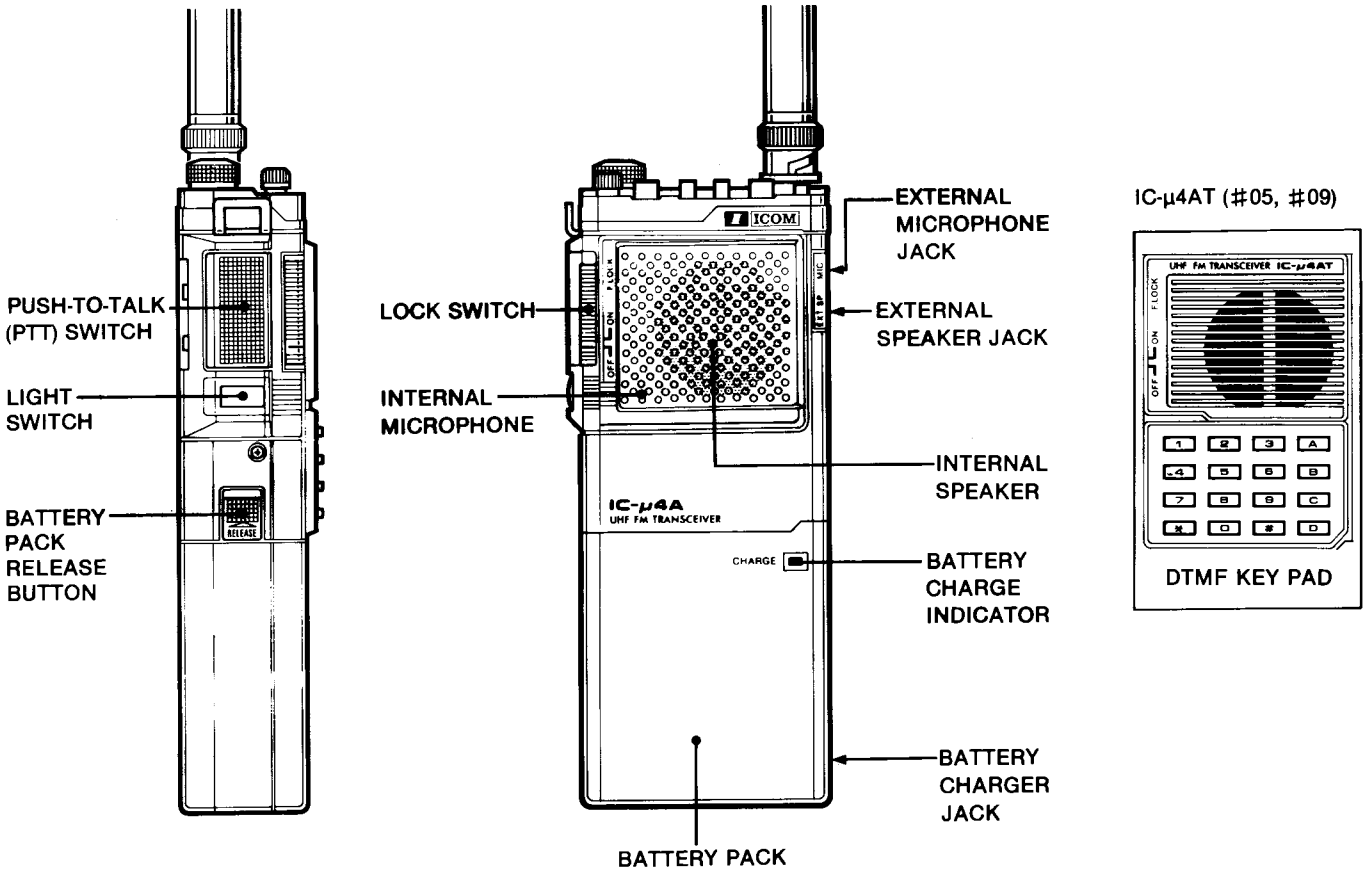

2-3 REAR AND BOTTOM VIEWS

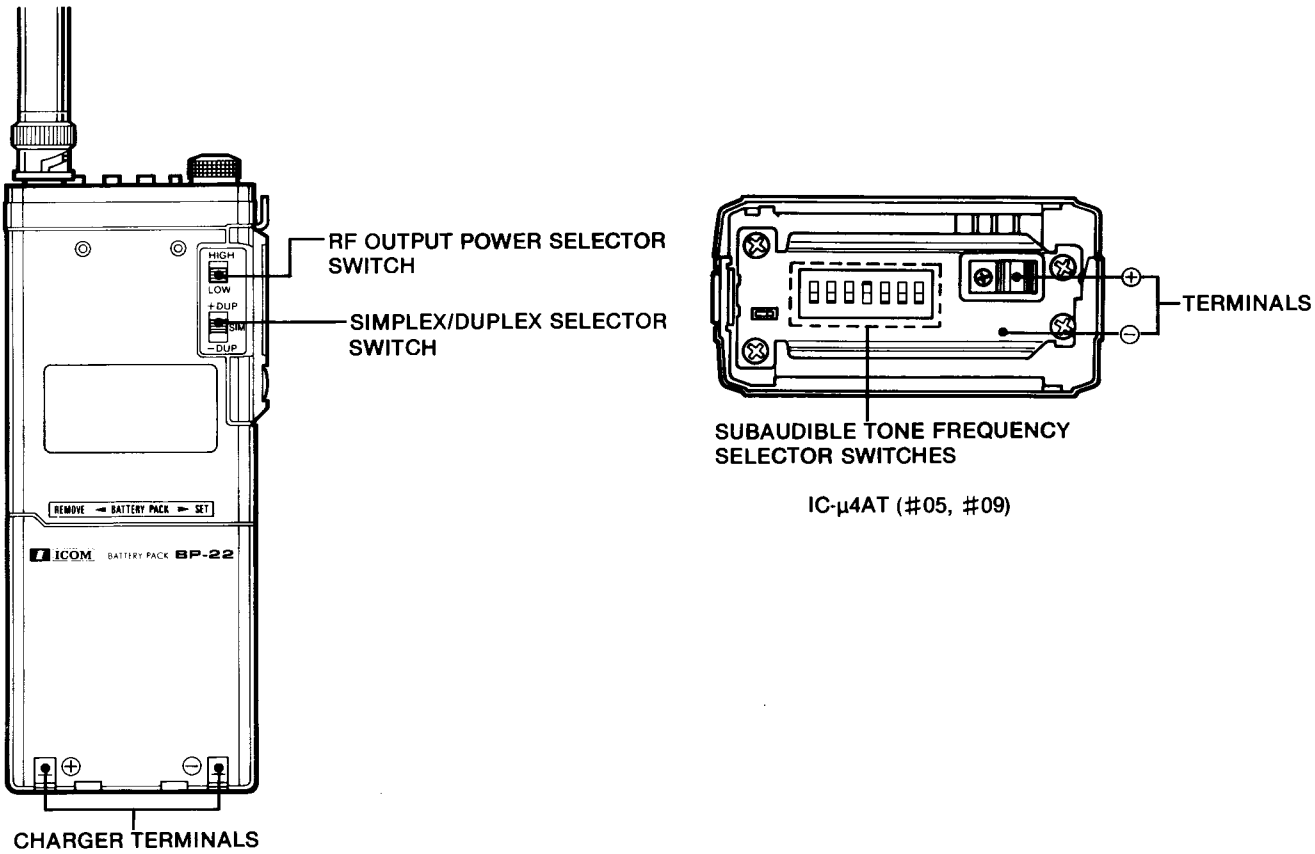

ManualsPlus.com

2-4 FRONT AND BOTTOM INSIDE VIEWS

• FRONT INSIDE VIEWS

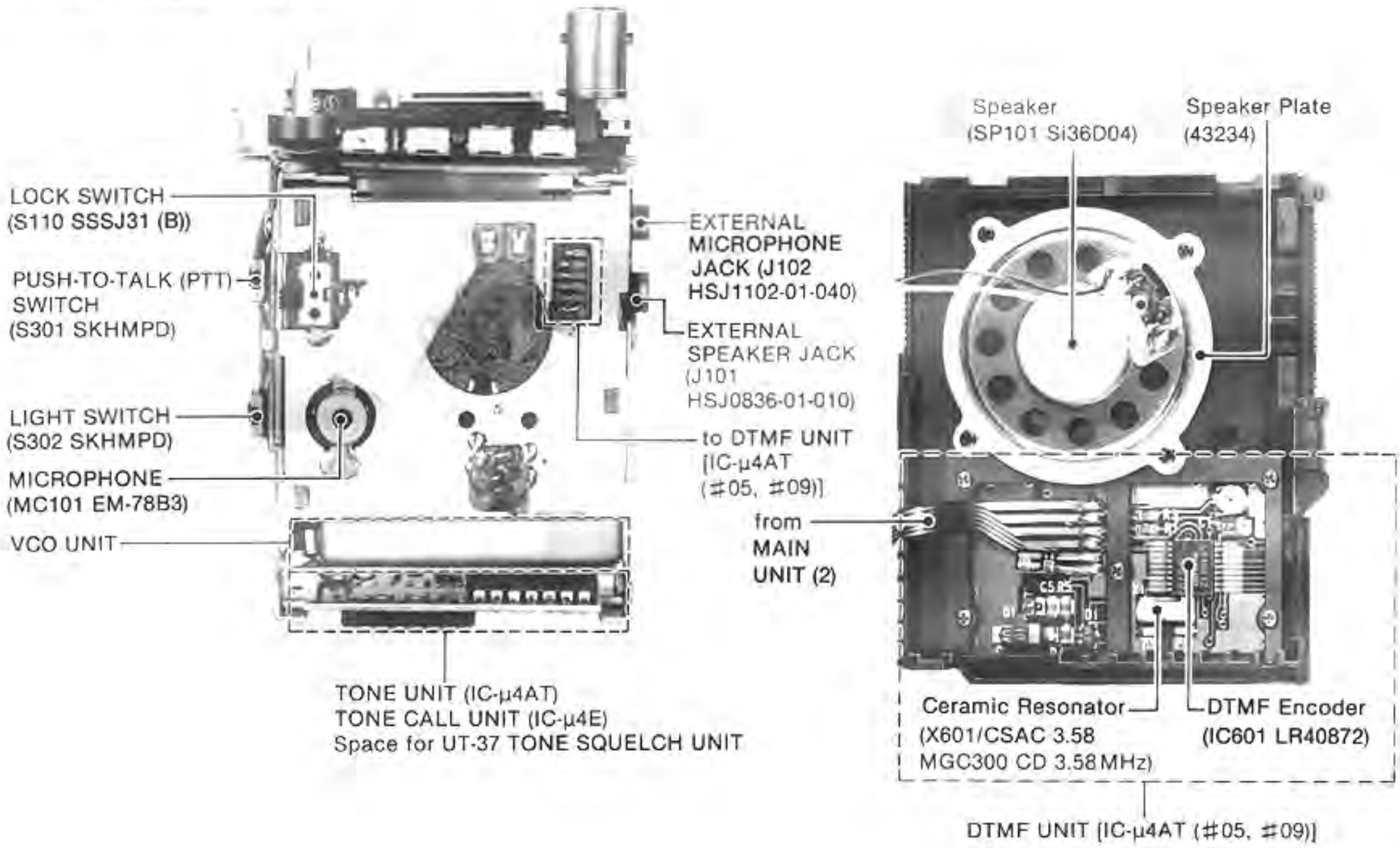

• BOTTOM INSIDE VIEWS

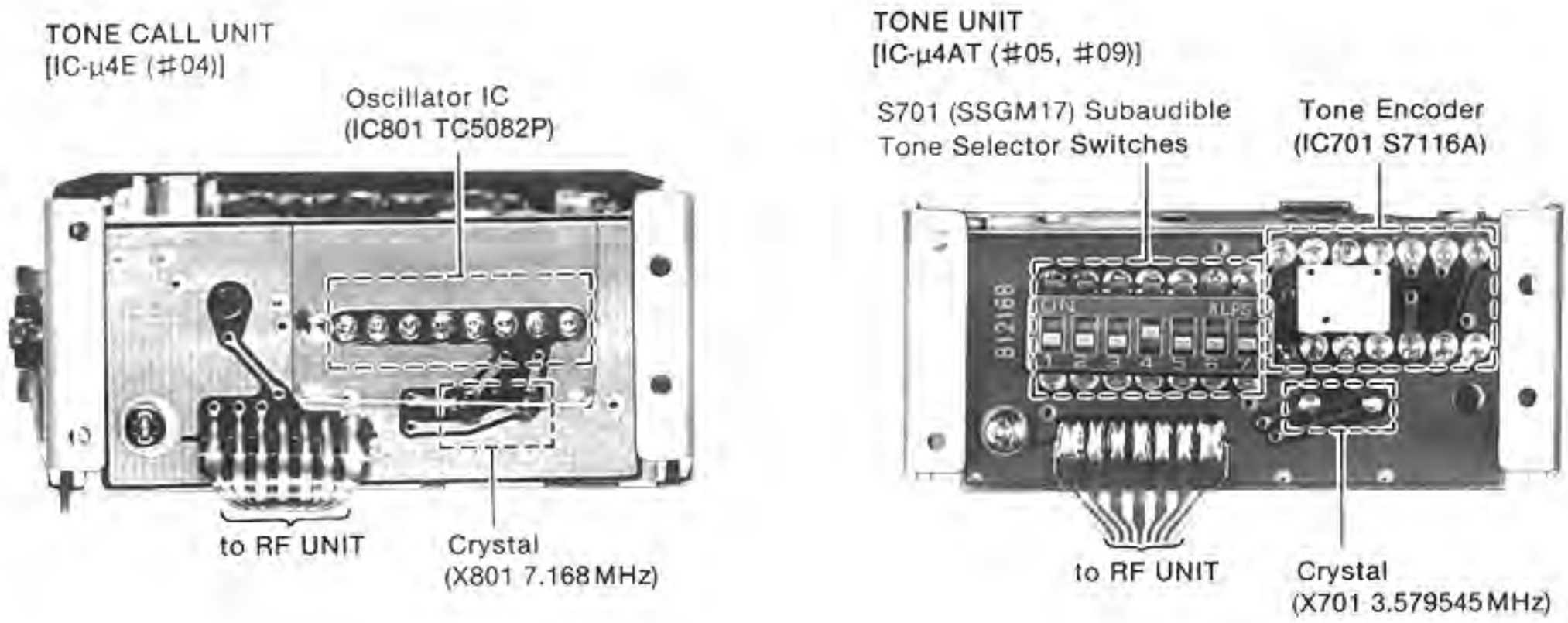

ManualsPlus.com

• FRONT INSIDE VIEW [MAIN UNIT (1)]

UNIT LOCATION

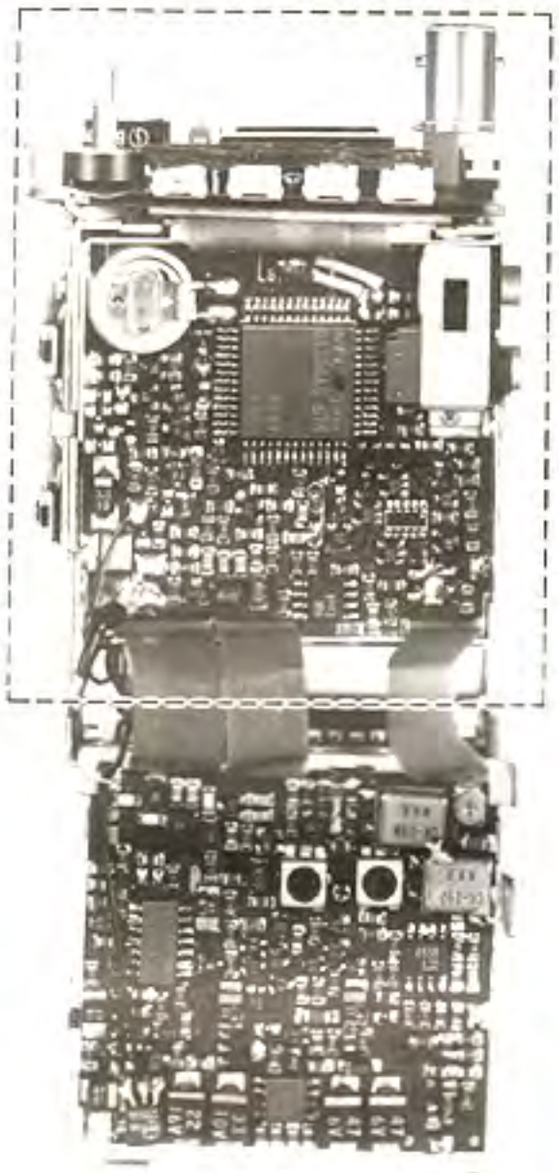

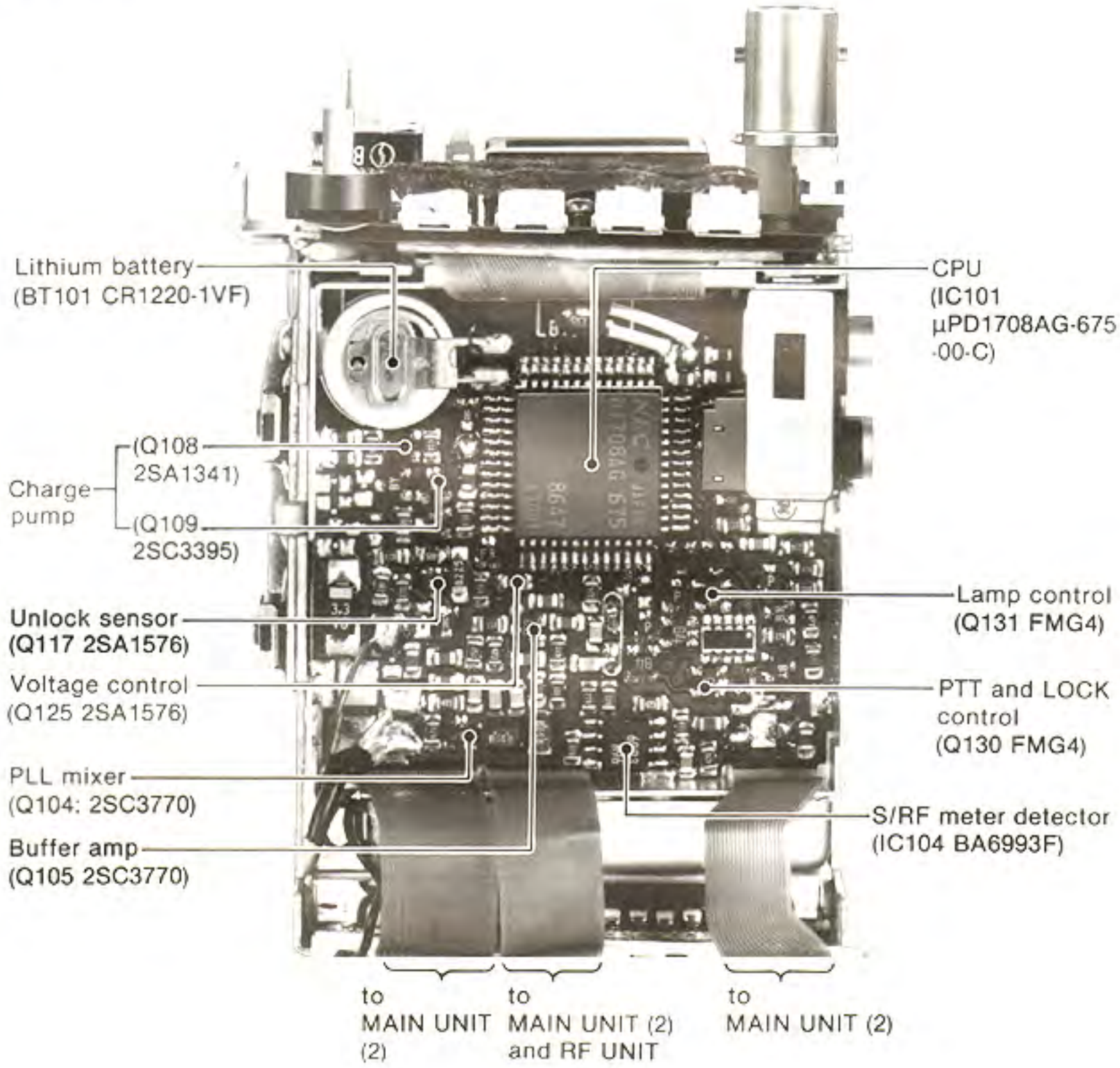

ILLUSTRATED APPEARANCE

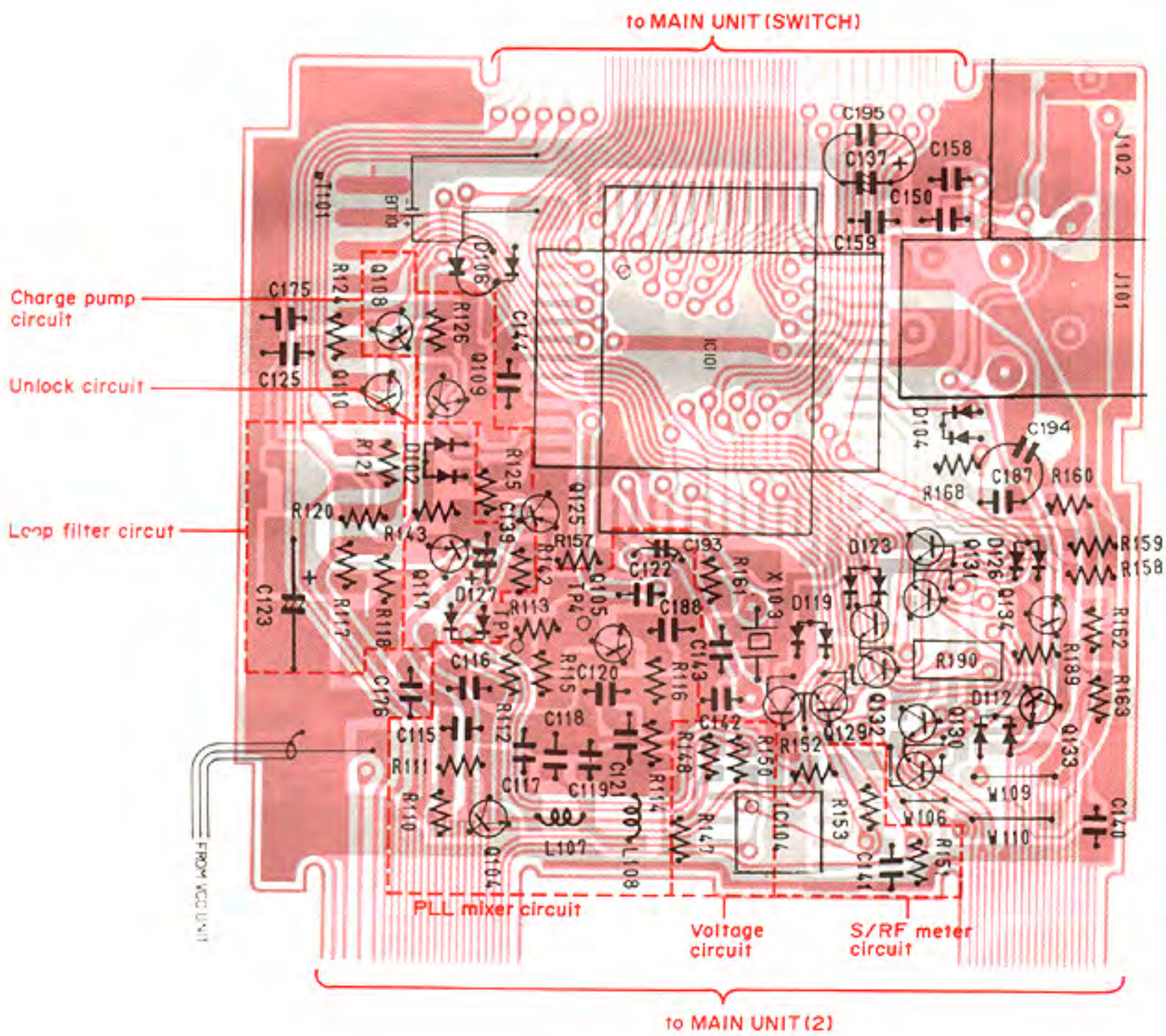

ManualsPlus.com

• FRONT INSIDE VIEW [MAIN UNIT (2)]

UNIT LOCATION

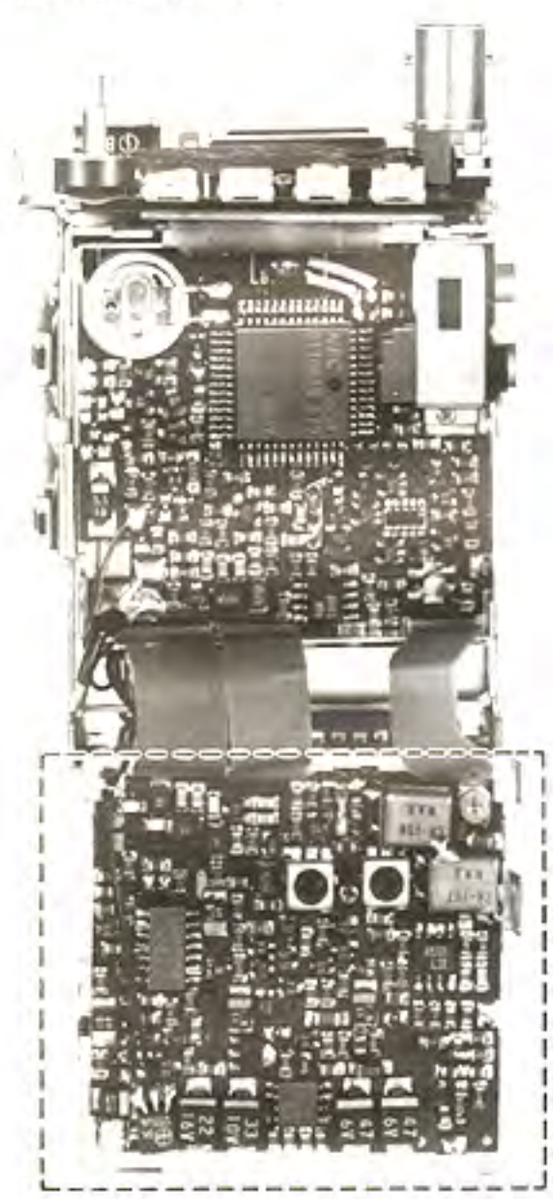

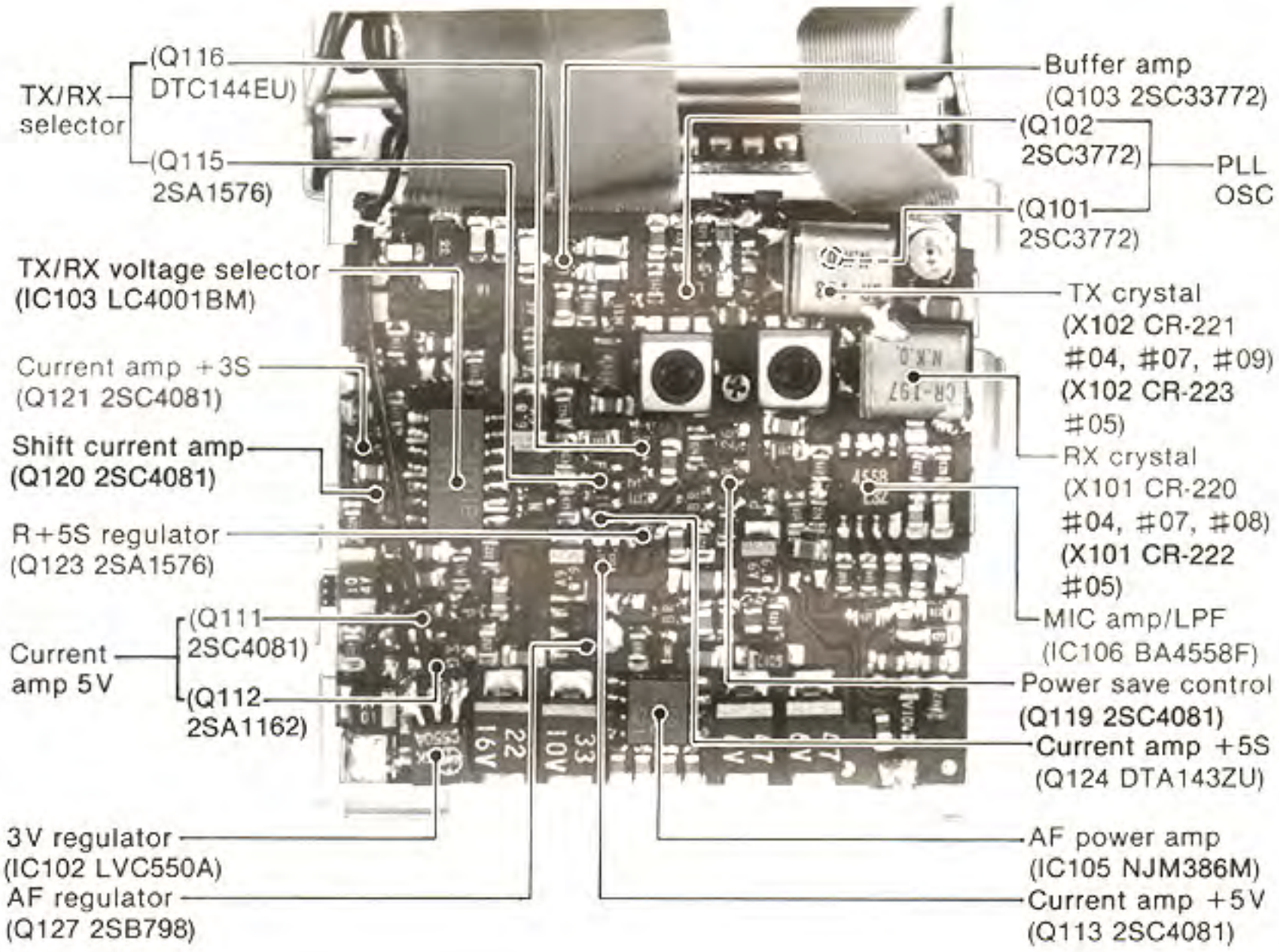

ILLUSTRATED APPEARANCE

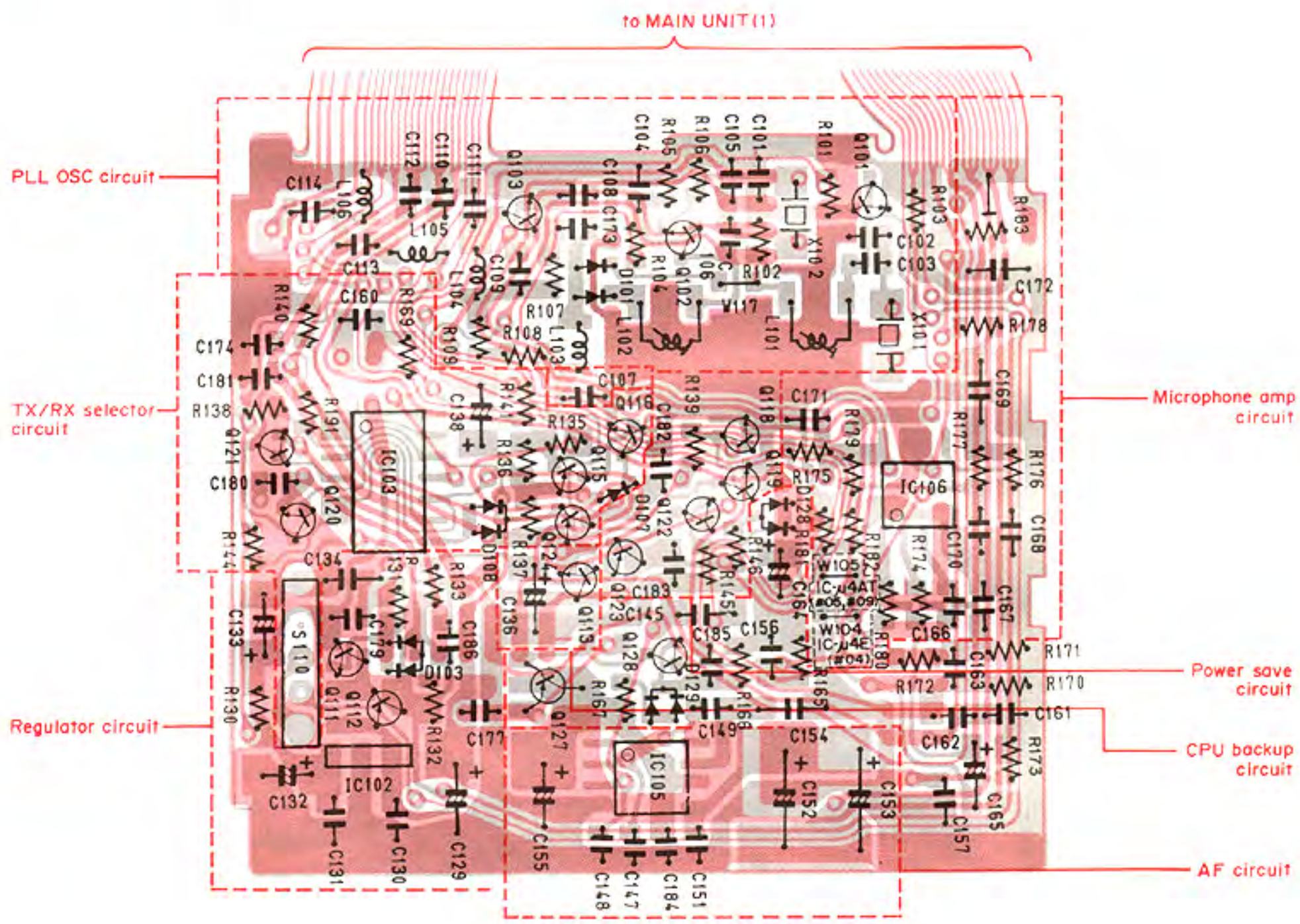

ManualsPlus.com

2-5 REAR INSIDE VIEWS

• RF UNIT (1)

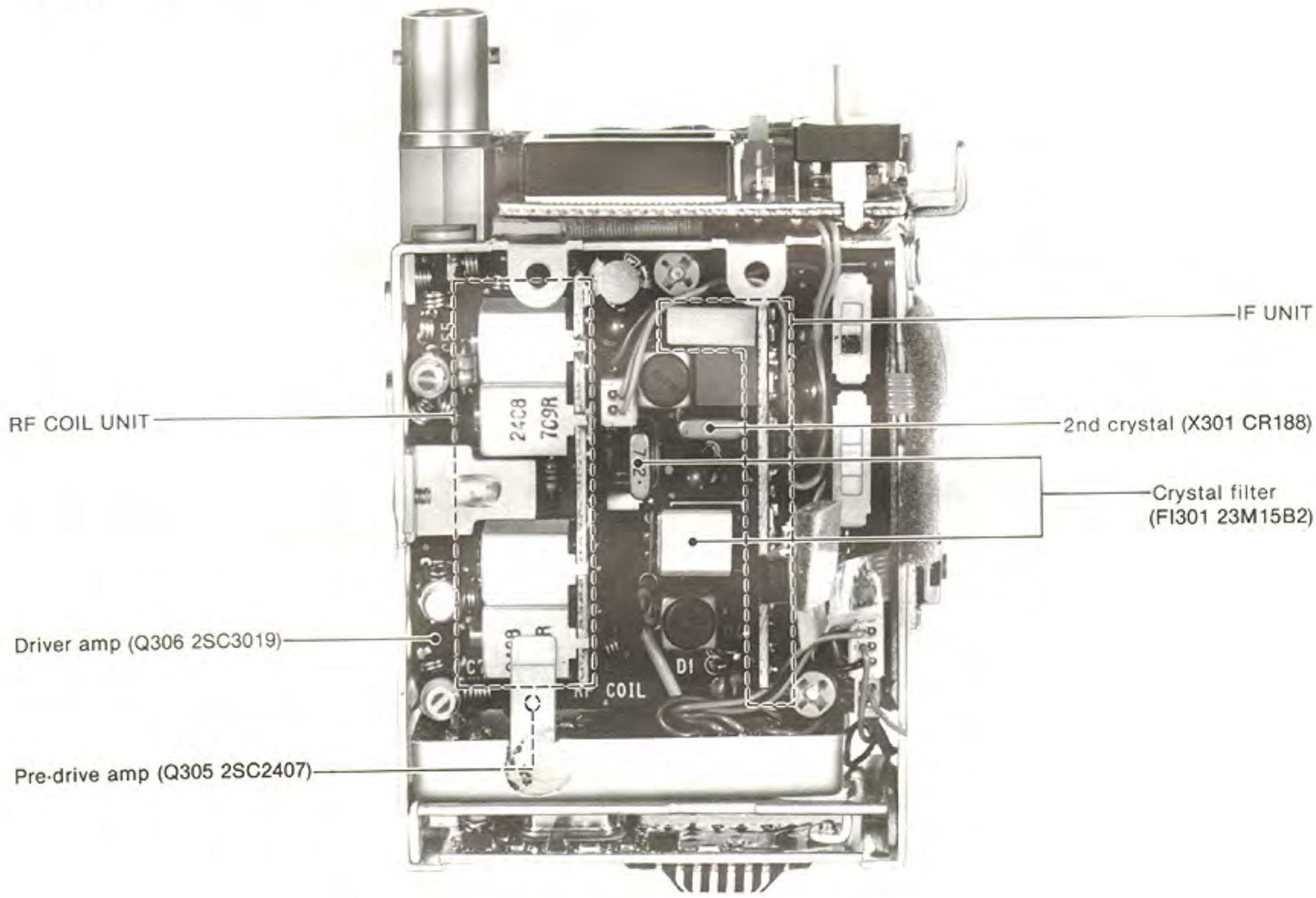

ILLUSTRATED APPEARANCE

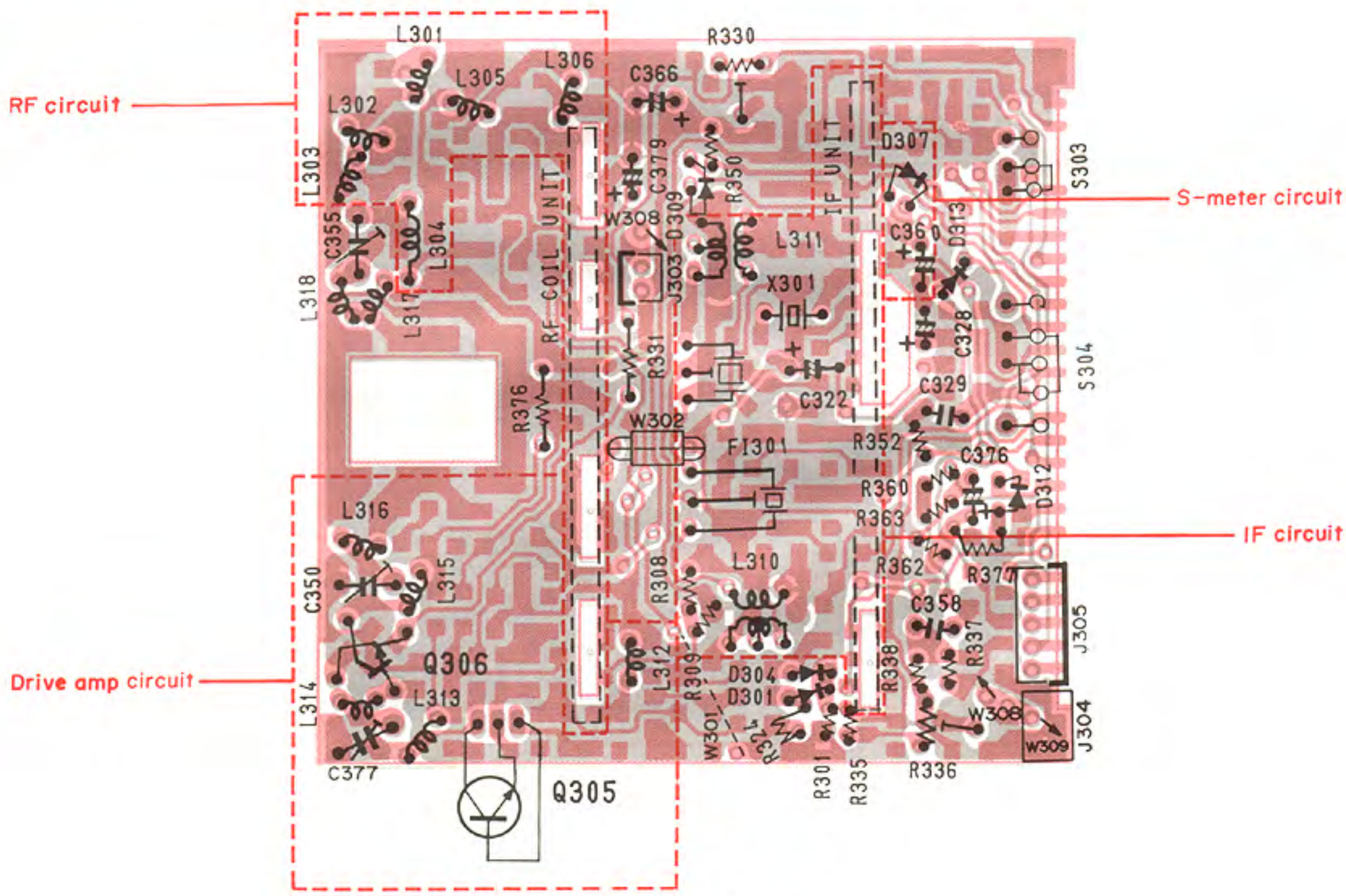

ManualsPlus.com

• RF UNIT (2)

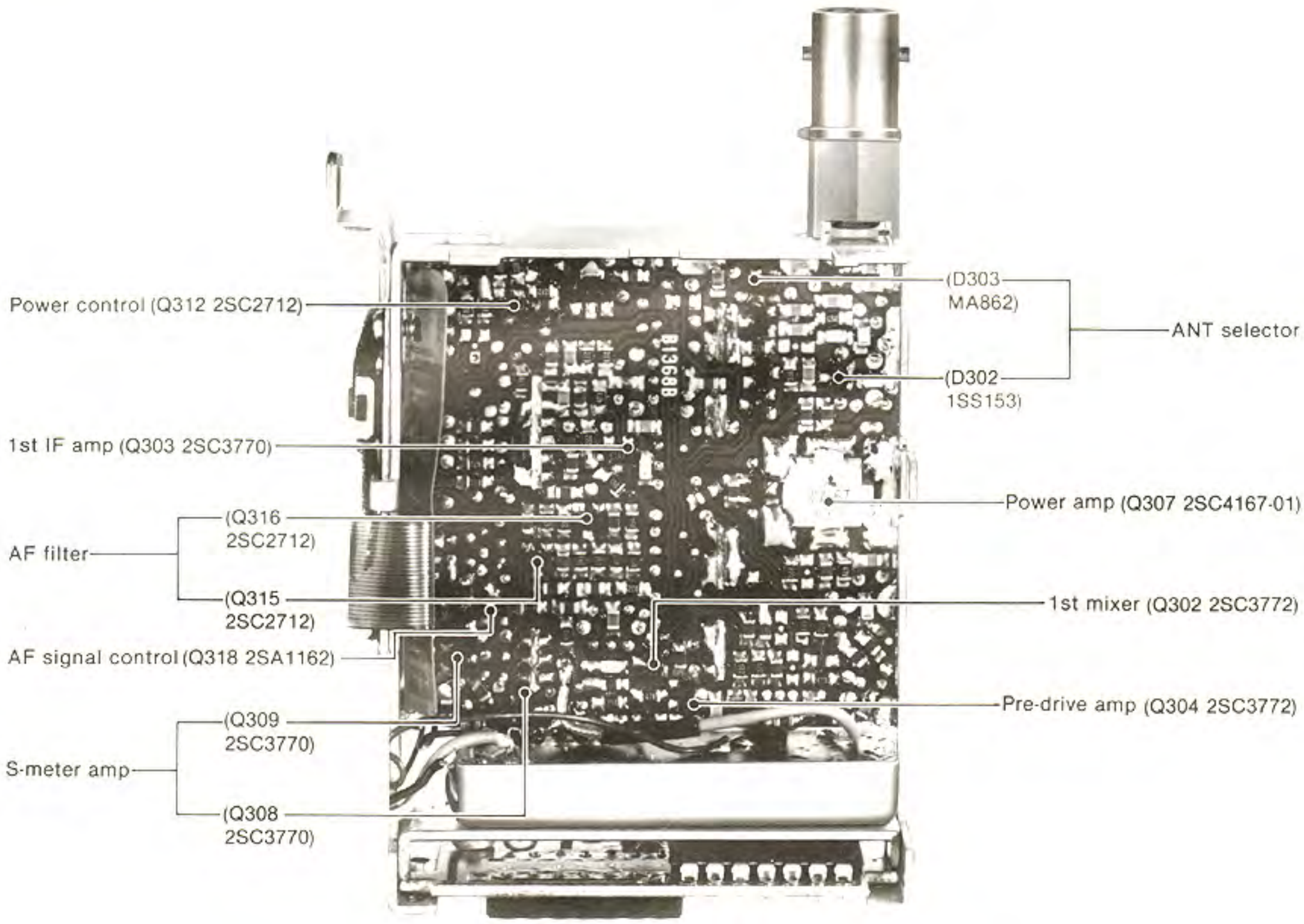

ILLUSTRATED APPEARANCE

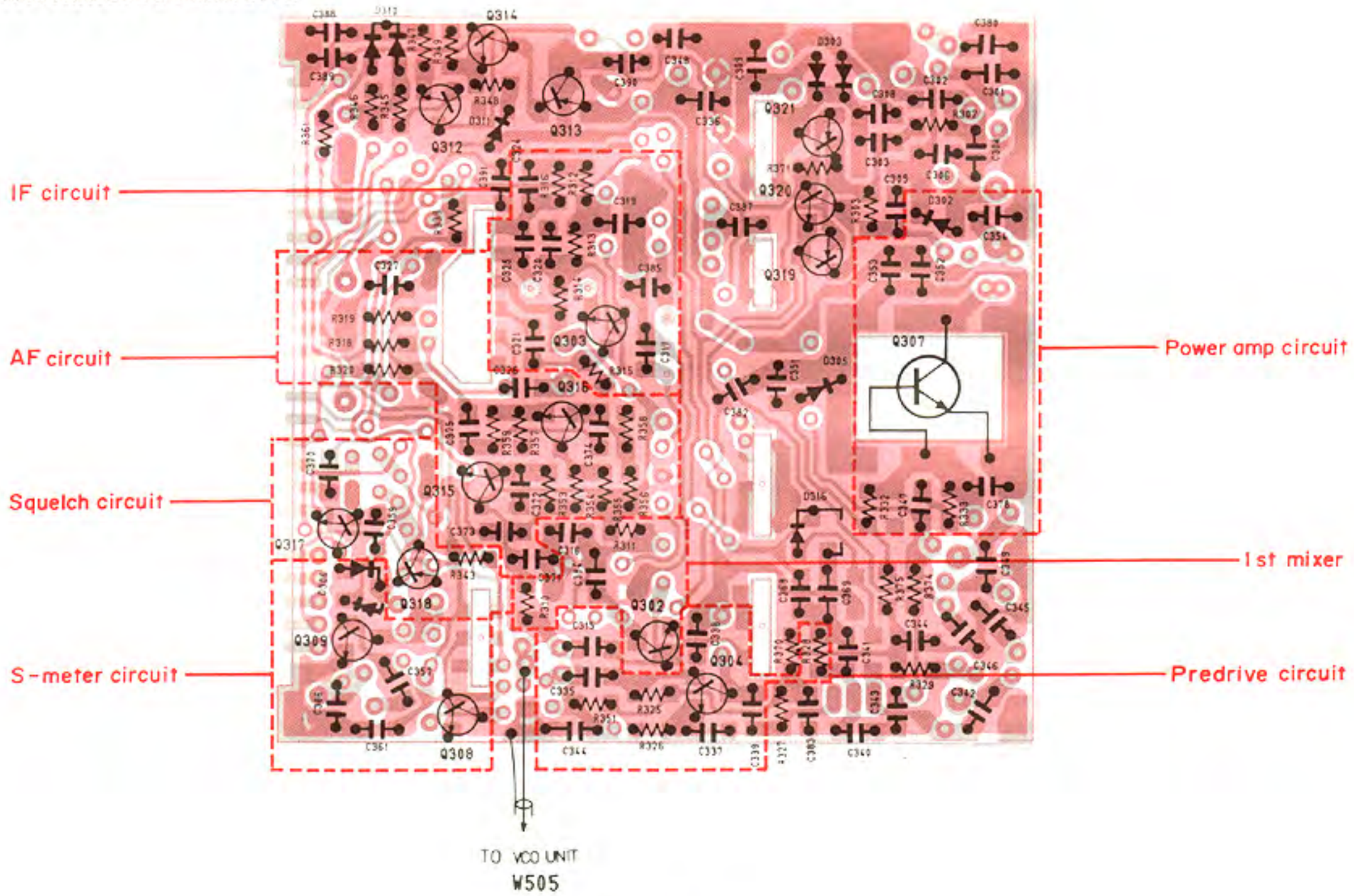

ManualsPlus.com

SECTION 3 BLOCK DIAGRAM

VERSION	f1 (TX Freq) MHz	f2 (Local Osc Freq) MHz	f3 (PLL IF) MHz	f4 (TX LO freq) MHz	f5 (RX LO freq) MHz
IC-μ4AT (#05)	440.0000 ~ 449.9950	416.8500 ~ 426.8450	11.9250 ~ 21.9200	428.075	404.925
IC-μ4A (#07, #09)	430.0000 ~ 439.9950	406.8500 ~ 416.8450	12.0250 ~ 22.0200	417.975	394.825
IC-μ4E (#04)	430.0000 ~ 439.9875	406.8500 ~ 416.8375	12.0250 ~ 22.0125		

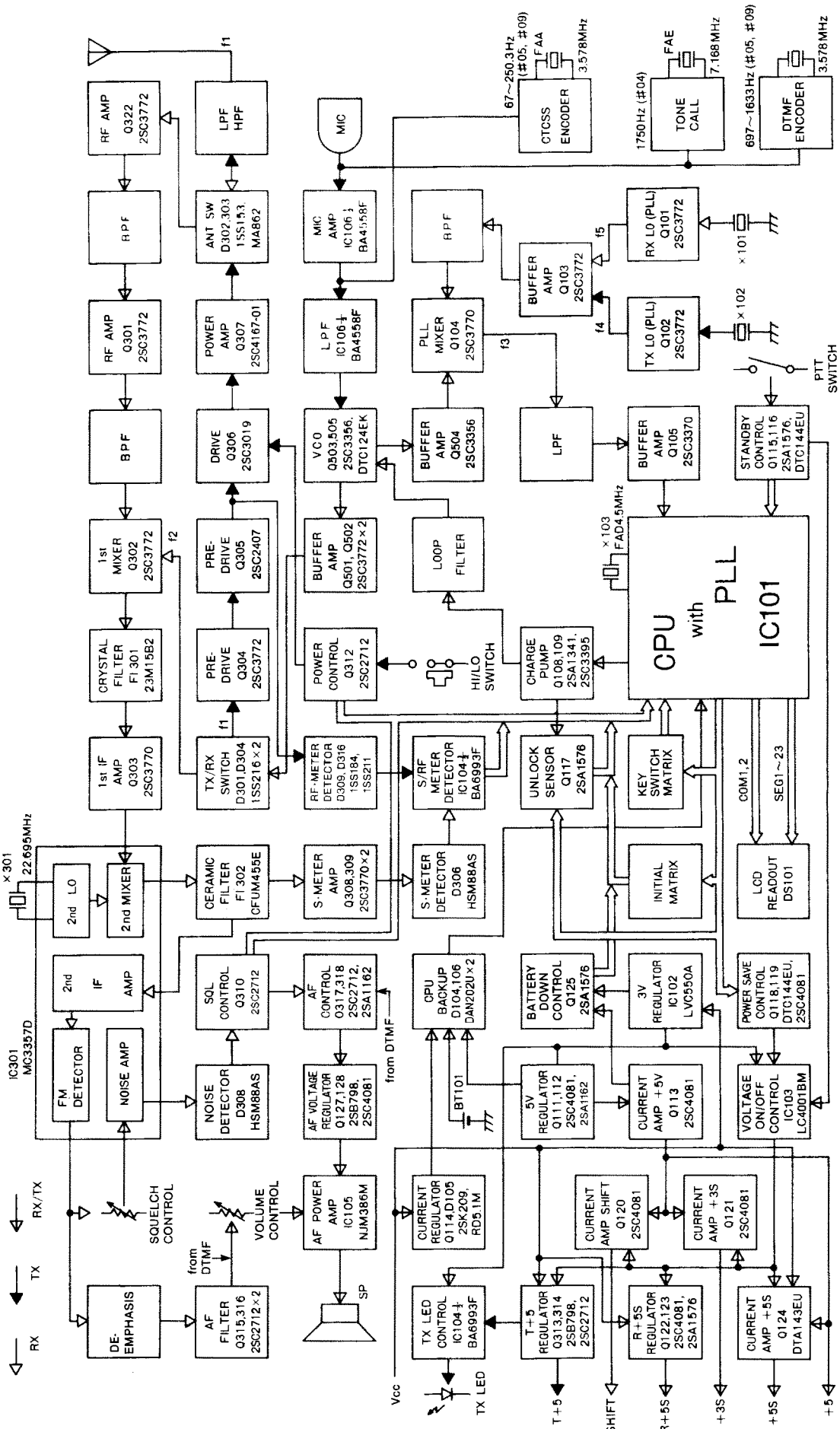

ManualsPlus.com

SECTION 4 CIRCUIT DESCRIPTION

4-1 RECEIVER CIRCUITS

4-1-1 ANTENNA SWITCHING CIRCUIT (RF UNIT)

Receive signals enter the RF UNIT from the ANTENNA CONNECTOR and pass through a low-pass filter consisting of L301, L302 and others, and a high-pass filter consisting of C304, C306 and L303. The signals are then fed to the antenna switching circuit.

The antenna switching circuit employs a λ/4-type diode switching system consisting of D302, D303, L305, L306 and other parts. While receiving, D302 and D303 turn OFF and receive signals are applied to the RF amplifier circuit.

4-1-2 RF CIRCUIT (RF UNIT)

The receive signals from the antenna switching circuit are amplified at RF amplifiers Q322 and Q301. Bandpass filters are designed for the after stage of each RF amplifier circuit to further suppress out-of-band signals.

After passing through the bandpass filter, signals are fed to 1st mixer Q302 for conversion to 23.15MHz 1st IF signals with LO signals from the PLL circuit.

4-1-3 IF CIRCUIT (RF UNIT)

1st IF signals from Q302 pass through a pair of crystal filters (FI301) to suppress out-of-band signals and unwanted heterodyned frequency signals. After passing through the filter, the 1st IF signals are amplified at IF amplifier Q303, and are fed to IC301.

IC301 contains the 2nd LO circuit, 2nd mixer circuit, limiter amplifier circuit and quadrature detector circuit. The 2nd LO circuit and X301 generate 22.695MHz 2nd LO signals which are used at the 2nd mixer section of IC301.

1st IF signals from Q303 are fed to pin 16 of IC301, and are mixed with 2nd LO signals for converting the 1st IF signals to 455kHz 2nd IF signals.

The 2nd IF signals are output from pin 3 and pass through high quality ceramic filter FI302 to suppress unwanted heterodyned frequency signals. They are then amplified at the limiter amplifier section (pin 5 of IC301) and applied to a quadrature detector circuit (pin 8 of IC301 and ceramic resonator X302) to demodulate 2nd IF signals to AF signals.

4-1-4 AF CIRCUIT (MAIN UNIT)

AF signals output from pin 9 on IC301 pass through a de-emphasis circuit (R318, C326) and are amplified at Q316 and Q315. The de-emphasis circuit is an integrator circuit with frequency characteristics of −6dB/oct.

Amplified signals pass through VOLUME CONTROL R129 and are amplified at AF power amplifier IC105 to drive the SPEAKER.

4-1-5 SQUELCH CIRCUIT (RF UNIT)

A portion of signals from pin 9 of IC301 passes through the SQUELCH CONTROL (R128 in the MAIN UNIT) and is fed to active filter pin 10 of IC301 where it collects noise components of 20kHz or more.

The noise components are then rectified by D308 for conversion to DC voltage. When this voltage is at a HIGH level, Q310 is ON, and Q317 and Q318 are OFF. Thus the audio control (ACTR) line is at a LOW level and turns OFF the power source circuit for IC105 (Q127 and Q128).

While transmitting, the emitter of Q318 is "LOW" and the power source of IC105 is also OFF.

IF CIRCUIT

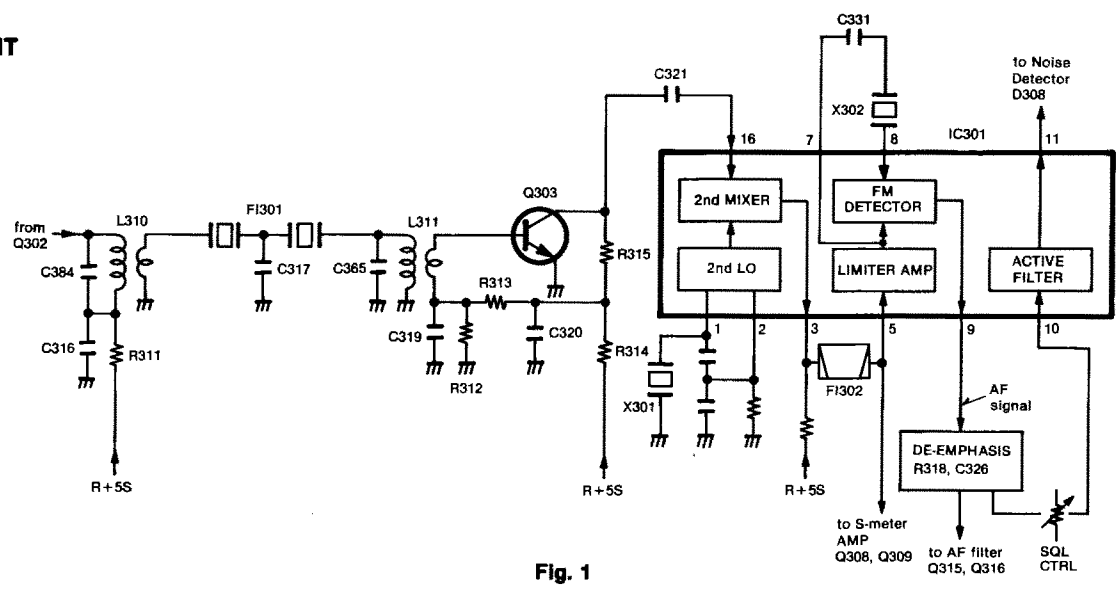

Fig. 1

ManualsPlus.com

4-1-6 S-METER CIRCUIT (RF UNIT)

A portion of signals passed from FI302 is amplified at S-meter amplifier Q308 and Q309, and is detected at voltage doubler rectifiers D306. These signals are then applied to meter comparator IC104B on the MAIN UNIT.

4-1-7 1st LO CIRCUIT (VCO UNIT)

412 MHz band LO signals from the VCO UNIT are fed to transmit/receive switching circuit D304 on the RF UNIT. The signals are then applied to the base of 1st mixer Q302 as 1st LO signals.

4-2 TRANSMITTER CIRCUITS

4-2-1 MICROPHONE AMPLIFIER CIRCUIT (MAIN UINT)

AF signals from the INTERNAL MICROPHONE or from the EXTERNAL MIC JACK are amplified at limiter amplifier pin 3 of IC106. This limiter amplifier is formed by a negative feedback circuit with frequency characteristics set at 6dB/oct. in the 300Hz~3kHz range. This causes the limiter amplifier to function as a pre-emphasis circuit.

Output from the limiter amplifier is similar to a rectangular waveform and includes harmonic components. Harmonic components higher than 3kHz are attenuated by splatter filter pin 5 of IC106.

AF signals from pin 7 of IC106 pass through modulation adjusting trimmer pot R183 and then pass through the RF UNIT. The signals are then applied to D502 on the VCO UNIT for performing frequency modulation.

4-2-2 BUFFER AMPLIFIER CIRCUIT (PLL UINT)

430 or 440 MHz band signals (OUT 2) from the VCO UNIT pass through transmit/receive switching circuit D301. They are then amplified at buffer amplifiers Q304 and Q305, and at driver Q306, thus obtaining wideband drive power.

4-2-3 POWER AMPLIFIER CIRCUIT

Amplified signals at Q306 are power amplified at Q307 and obtain more than 1W (when HIGH is selected) or 0.1W (when LOW is selected).

Output power from Q307 passes through an antenna switching circuit, a high-pass filter, a low-pass filter, and then is applied to the ANTENNA CONNECTOR.

POWER AMPLIFIER CIRCUIT

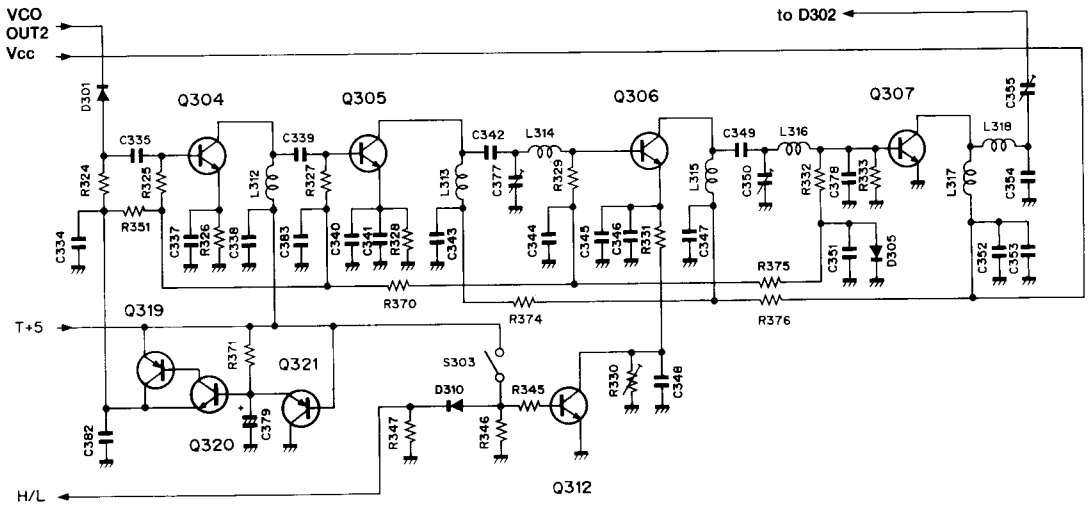

Fig. 2

4-3 PLL CIRCUITS

The PLL circuits adopt a dual modulus prescaler system and mixer system. The circuits consist of a local oscillator, a loop filter, a mixer circuit, and 3 more circuits contained in the CPU: a reference frequency circuit, a swallow counter, and a programmable counter.

4-3-1 LOCAL OSCILLATOR CIRCUIT (MAIN UNIT)

The local oscillator circuit employs a 3rd overtone oscillator circuit using X101 and Q101 in receive mode and X102 and Q102 in transmit mode. Oscillated signals are amplified at Q103 and are then applied to PLL mixer Q104. R+5S and T+5 switch each oscillator.

VERSION	FREQUENCY	
	RECEIVE	TRANSMIT
#05	404.925 MHz	428.075 MHz
#04, #07, #09	394.825 MHz	417.975 MHz

4-3-2 PLL MIXER CIRCUIT (MAIN UNIT)

The oscillated signals (OUT 1) from the VCO UNIT are applied to the base of Q104 and are mixed with local

ManualsPlus.com

oscillator signals from Q103. The minus heterodyned frequency is picked up at a low-pass filter consisting of L107, L108 and other parts, and is amplified at Q105, then fed to pin 9 of the CPU.

4-3-3 DUAL MODULUS PRESCALER (MAIN UNIT)

CPU IC101 incorporates a reference oscillator circuit, a swallow counter, a programmable counter and a phase detector separate from the logic circuits.

The mixed signals input from pin 9 are divided either by 1/32 or 1/33 by a prescaler. They are divided with N-data by a programmable divider, phase detected with a reference oscillator by a phase detector, and are output from pins 11 and 12.

4-3-4 REFERENCE OSCILLATOR CIRCUIT (MAIN UNIT)

4.5MHz signals are oscillated at reference oscillator X103 and are divided by 1/900 (1/720 #04) to obtain a reference frequency of 5kHz (6.25kHz #04). The reference frequency is used at the phase detector as explained in SECTION 4-3-3.

4-3-5 LOOP FILTER (MAIN UNIT)

Phase-detected signals from pins 11 and 12 are converted to DC voltage by charge pump Q108 and Q109, and a loop filter (low-pass filter) consisting of R117, R118, R120, R121, C123, and VCO UNIT C526.

Q106 is an accelerator which ensures rapid PLL lockup times.

4-3-6 VCO CIRCUIT (VCO UNIT)

In receive mode, the SHIFT voltage is "HIGH". This turns Q505 and D502 ON and adds C509, C510 and C522 for oscillation. In transmit mode, the SHIFT voltage is "LOW" and D502 is reverse biased. Modulation signals then change the capacitance of D502 to make an FM modulation.

VCO oscillating signals are controlled by varactor diode D501 with PLL lock voltage (LV) from the MAIN UNIT.

4-3-4 UNLOCK CIRCUIT (PLL UNIT)

When the PLL circuit is unlocked, Q110 turns ON and a "LOW" level signal passes through integrator circuit R143 and C139. The signal is then fed to Q117 which turns ON and outputs a "HIGH" MUTE signal to pin 17 of the CPU.

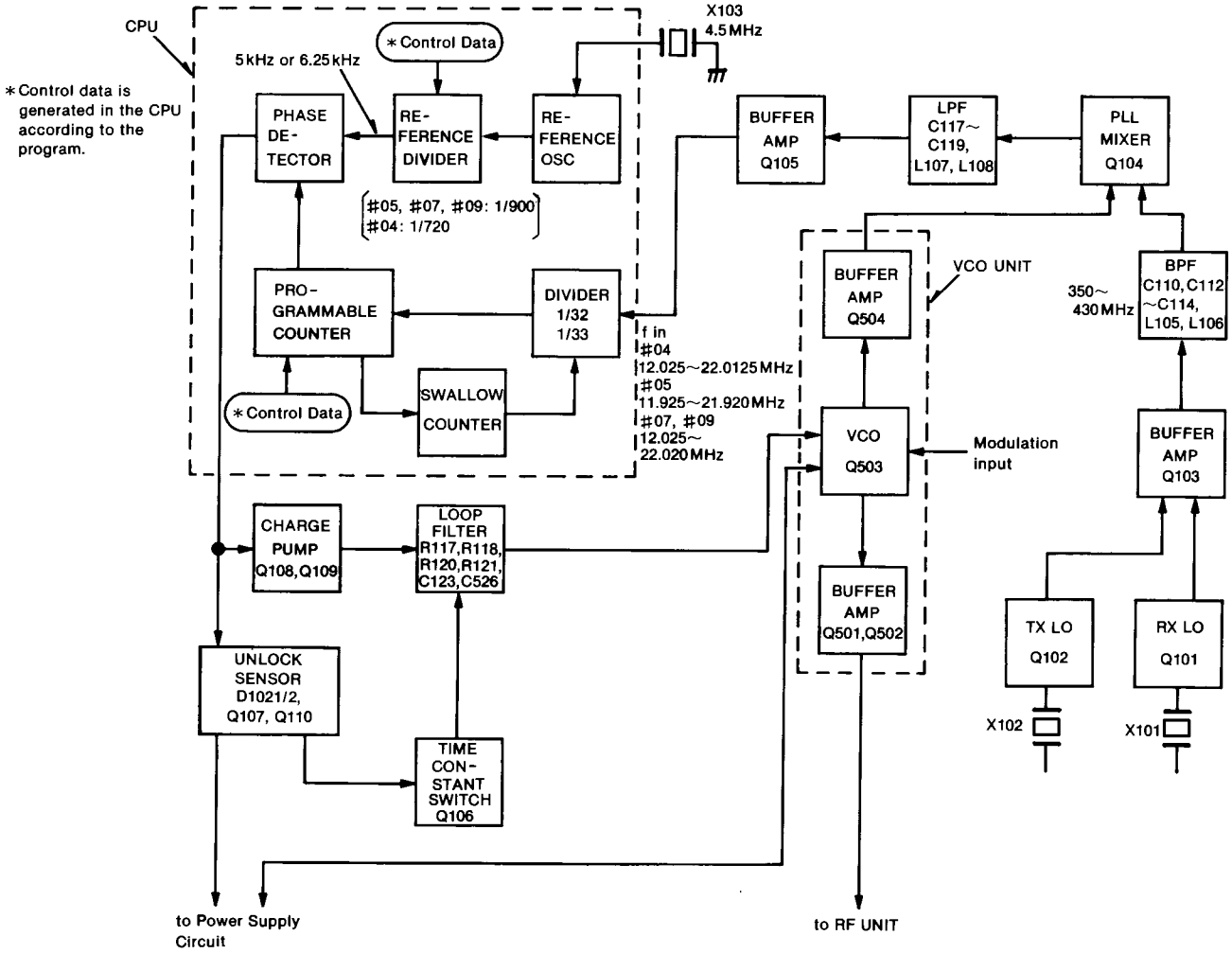

Fig. 3

ManualsPlus.com

4-4 LOGIC CIRCUITS

4-4-1 CPU PORT ALLOCATIONS

Following is an explanation of operations and their I/O ports.

PIN NUMBER	PORT NUMBER	TERMINAL	I/O	DESCRIPTION
17	PA3	MUTE	IN/ OUT	Receives "HIGH" when the PLL is unlocked. Outputs "HIGH" when out-of-ham band or offset write condition is selected.
18	PA2	H/L BUSY	IN	Receives "LOW" when the squelch is closed or the RF output [LOW] position is selected. Receives "HIGH" when the squelch is open or the RF output [HIGH] position is selected.
19	PA1	AD IN	IN	AD 01~AD 03 are indicated on the S/RF INDICATOR when "LOW" is received.
21~24	K3~K0	KEY 3~0	IN	Key matrix input ports. Refer to SECTION 4-4-3.
25~27	PB3~PB1	STB 3~1	OUT	Key matrix output ports with PC2. Refer to SECTION 4-4-3.
28	PB0	LAMP	OUT	Refer to SECTION 4-4-6.
29	PC3	PSC	OUT	Power save signal output ports. Refer to SECTION 4-4-5.
30	PC2	ADO 3	OUT	Key matrix output port with PB3~PB1. Comparison output ports with PC1 and PC0.
31, 32	PC1, PC0	ADD 2, 1	OUT	Comparison output ports with PC2. Outputs a loop counter number and counts up until the PA1 port receives "LOW" to compare and read S-meter voltage.

4-4-2 INITIAL MATRIX

The initial matrix determines the frequency range, tuning steps, etc., when the CPU is initialized.

The CPU outputs "HIGH" strobe signals in sequence to the initial matrix: PC0→PC3→PB0→PB2.

After finishing the strobe scan, output ports for initial matrix operate the other functions as described in SECTION 4-4-1.

INITIAL MATRIX CIRCUIT

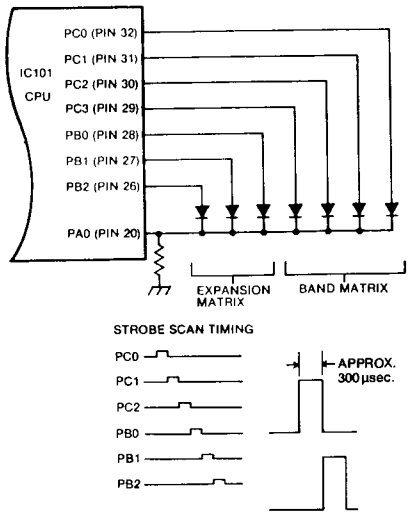

Fig. 4

4-4-3 KEY MATRIX

The key matrix checks all switch conditions.

When all non-lock type switches remain OFF:

PB1~PB3 ports remain "HIGH" and strobe scan does not function. The F.LOCK SWITCH also is not checked.

When one of non-lock type switches is pushed:

1) Any of input ports K0~K3 is "HIGH".
2) The CPU then starts strobe scanning to search for a switch to turn ON.
3) After searching, output ports PB1~PB3 are at "LOW" and the PC2 port is "HIGH" for checking the lock-type switch condition.

Example: While pushing the 100kHz switch upwards when the DUP/SIM SWITCH is selected at "-DUP".

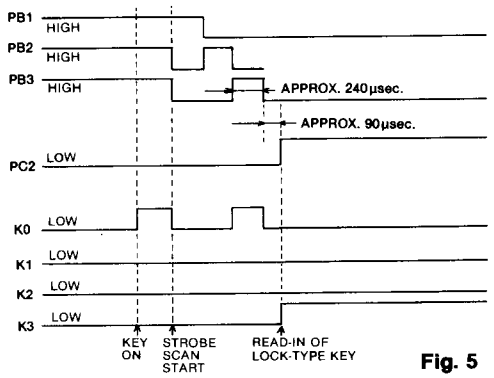

Fig. 5

ManualsPlus.com

HARDWARE CONFIGURATION OF KEY MATRIX

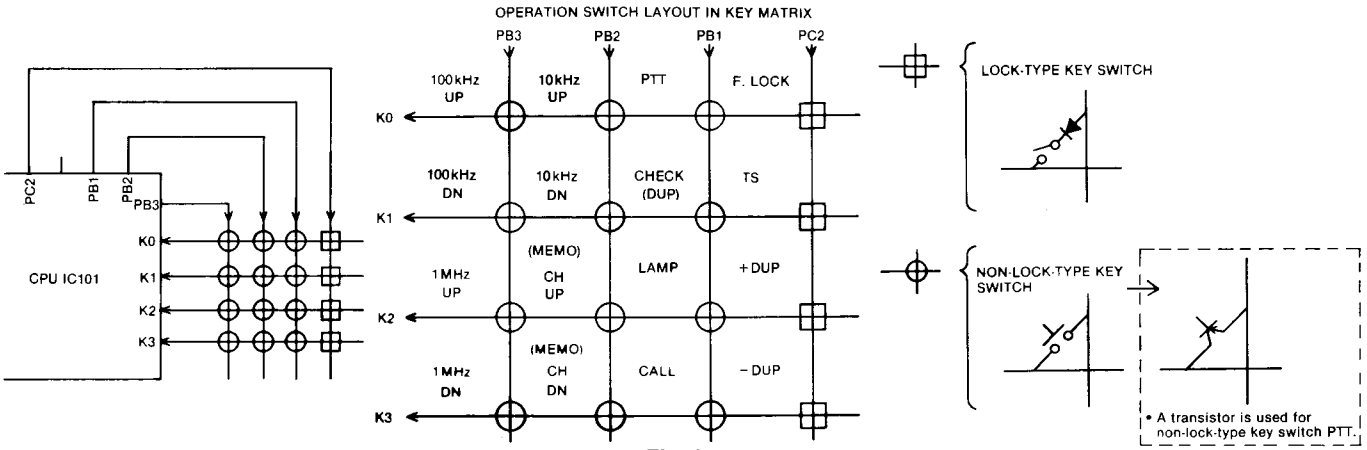

Fig. 6

4-4-4 METER COMPARATOR

When receiving:

The voltage detected in the S-meter circuit is input to pin 6 of IC104B. A/D signals from the CPU are fed to pin 5 of IC104B.

The CPU then counts up and outputs 3-bit digital signals (additional scan) until pin 5 of IC104B becomes higher than pin 6. These signals are converted to analog signals with R158~R160.

When a PA1 port receives "HIGH", the CPU indicates a counting number minus 1 to the S/RF INDICATOR. When PA 1 port does not receive "HIGH" until finishing an additional scan, the S/RF indicator shows full scale.

When the PA2 port receives "HIGH", 1 dot appears on the S/RF INDICATOR. The squelch is in an open condition and the power saver function does not operate.

When transmitting:

The PC1 port is "HIGH", PC0 and PC2 are "LOW", and the S/RF line is fixed at "LOW" so additional scanning cannot start. The S/RF INDICATOR shows full scale when the PA2 port is "HIGH", and 3 dots when the PA2 port is "LOW".

S/RF INDICATOR VOLTAGE DETECTION AND SQUELCH OPEN DETECTION

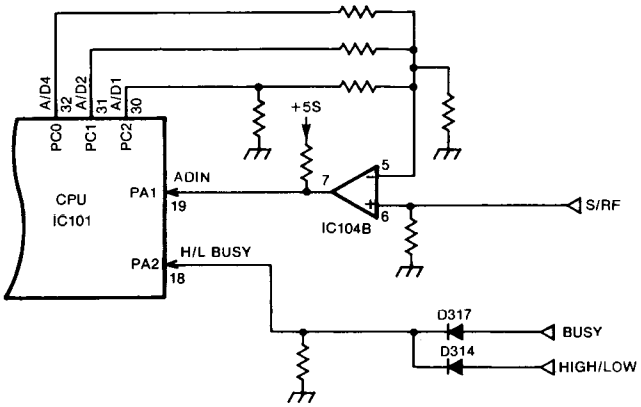

Fig. 7

4-4-5 POWER SAVER CIRCUIT

The power saver function starts when no signals are received by the CPU after 30sec. (when no switch is pushed, the squelch is closed, or when the transceiver is in receive mode).

When the power saver function starts, the PC3 port outputs a power save signal as in the following timing diagram.

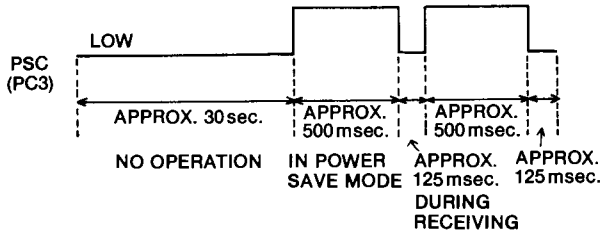

Fig. 8

While the PC3 port outputs "HIGH", +3S, R+5S and +5S lines are 0V and other circuits other than the CPU power source circuit do not function.

POWER SAVER CIRCUIT

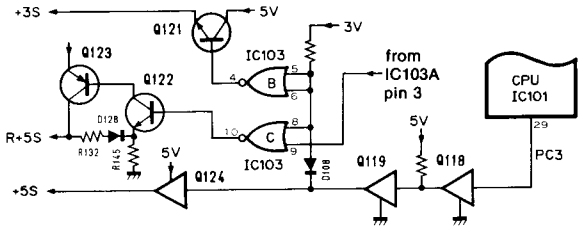

Fig. 9

ManualsPlus.com

4-4-6 LAMP CIRCUIT

When the LAMP SWITCH is pushed, the PB0 port remains "HIGH" for 5sec.

PB0: "HIGH": The LCD backlight comes on.
"LOW": The LCD backlight goes out.

If the LAMP SWITCH is pushed again when the PB0 port is in a "HIGH" condition, the PB0 port returns to "LOW".

If any non-lock type switches are pushed while PB0 remains "HIGH", the 5sec. timer starts after non-lock type switches are released (except for the PTT and CHECK SWITCHES).

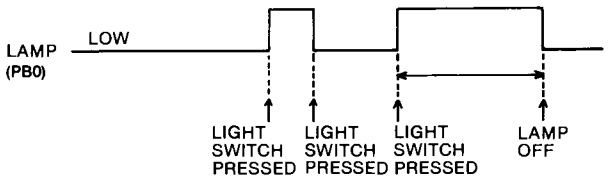

Fig. 10

4-5 POWER SUPPLY CIRCUITS

4-5-1 VOLTAGE LINES

LINE	DESCRIPTION
HV	From the BATTERY PACK directly.
VCC	HV voltage passed through the POWER SWITCH.
+3S	Common 3V controlled by the power save function. Made at Q121 and IC103B.
+5S	Common 5V controlled by the power save function. Made at Q124.
R+5S	Receive 5V controlled by the power save function. Current amplified at Q122 and Q123.
T+5C	Transmit 5V controlled by a MUTE signal. Made at IC103D.
T+5	Transmit 5V current amplifed of T+5C at Q313 and Q314 in the RF UNIT.

4-5-2 CPU POWER SOURCE CIRCUIT (MAIN UNIT)

When the battery pack is remove from the transceiver, a voltage is applied to the CPU via D106 from LITHIUM BACKUP BATTERY BT101 to provide backup for the memory contents.

4-5-3 REDUCED VOLTAGE DETECTING CIRCUIT (MAIN UNIT)

The reduced voltage detecting circuit consists of IC104A, R147 and R148. A regulated 3V is applied to pin 3 of IC104A. The voltage of the Vcc is divided by R148 and R147, and is applied to pin 2.

If the Vcc voltage decreases to less than 5.45V, the voltage at pin 2 is less than that at pin 3 and the output voltage at pin 1 of IC104A is "HIGH". The TRANSMIT INDICATOR does not light up even if the PTT SWITCH is pushed.

REDUCED VOLTAGE DETECTING CIRCUIT

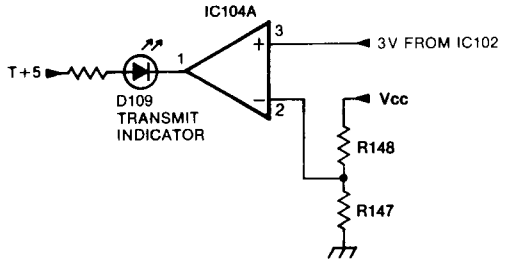

Fig. 11

4-6 OTHER CIRCUITS

4-6-1 DTMF ENCODER CIRCUIT (DTMF UNIT) [#05 and #09 versions only]

IC601, the DTMF encoder, generates Dual Tone Multi-Frequencies. If any keys on the KEYBOARD are pushed while transmitting, the proper frequency dividing ratio for the dividing frequency of X601 (3.58MHz) is selected. One set of audio frequencies corresponding to row input and column input are then output from pin 17.

Also, a "HIGH" level is applied from pin 10 of IC601 when the KEYBOARD is activated. This level has a time constant of approximately 1sec. for turning Q601 ON. Thus key entries can be made without holding the PTT SWITCH down.

4-6-2 SUBAUDIBLE TONE ENCODER CIRCUIT (TONE UNIT) [#05 and #09 versions only]

When the SUBAUDIBLE TONE SWITCH or P7 of S701 is turned ON, IC701 generates subaudible tones. A generated tone is made from dividing oscillator X701, and the dividing ratio is fixed by the P1~P6 switches on S701.

4-7-6 TONE CALL CIRCUIT (TONE UNIT) [#04 version only]

The TONE CALL UNIT generates a 1750Hz tone to open a repeater. When the TONE CALL SWITCH is pushed, Q801 is turned ON and T+5V is applied to IC801. IC801 divides 7.1680MHz by 1/4096 and outputs 1750Hz from pin 4.

ManualsPlus.com

SECTION 5 MECHANICAL PARTS AND DISASSEMBLY

5-1 FRONT PANEL DISASSEMBLY

1. Turn the POWER/VOLUME CONTROL OFF and remove the BATTERY PACK as shown in Fig. 5-1-1.

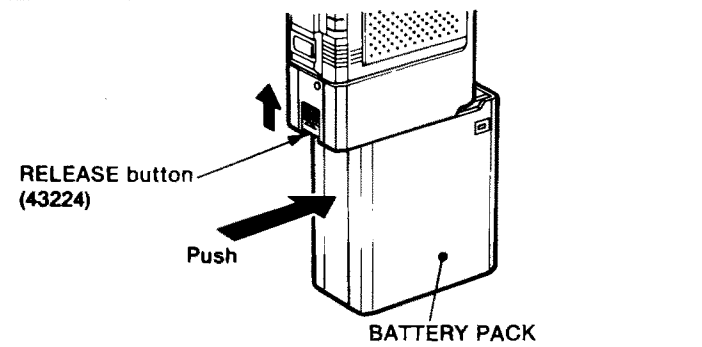

Fig. 5-1-1

2. Remove the 4 screws Ⓐ on the bottom and the sliding guide as shown in Fig. 5-1-2.

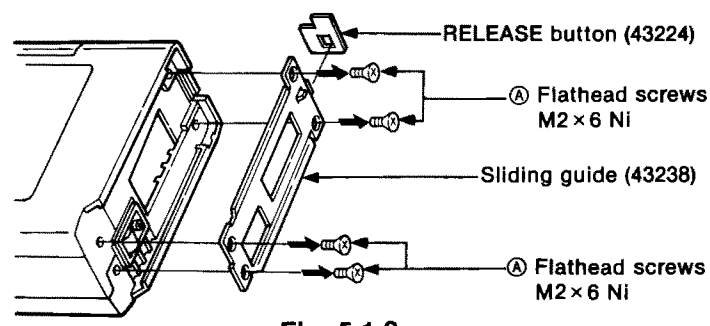

Fig. 5-1-2

3. Remove the screw Ⓑ and the FRONT PANEL as shown in Fig. 5-1-3.
4. Remove the PTT button and the LIGHT button.

IC-μ4E/A (#04, #07)
CAUTION:
Be careful not to cut the lead wires of the speaker.

IC-μ4AT (#05, #09)
CAUTION:
Be careful not to cut the lead wires of the speaker and the flexible board.

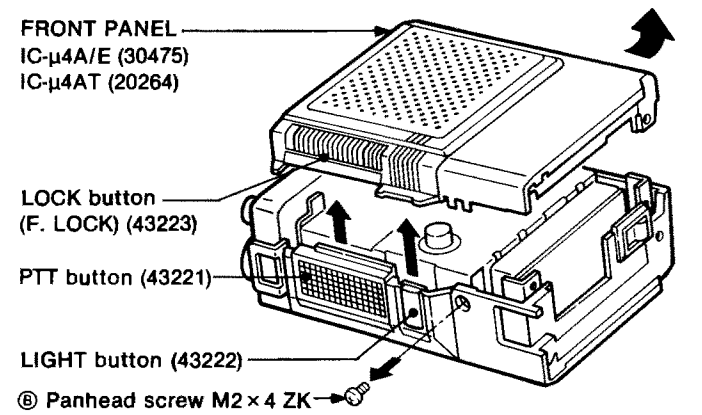

Fig. 5-1-3

IC-μ4AT (#05, #09)
5. Unsolder solder point Ⓐ to remove the flexible board.

NOTE: When assembling the FRONT PANEL, turn the flexible board in as shown here.

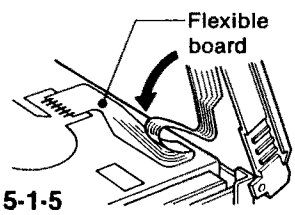

Fig. 5-1-5

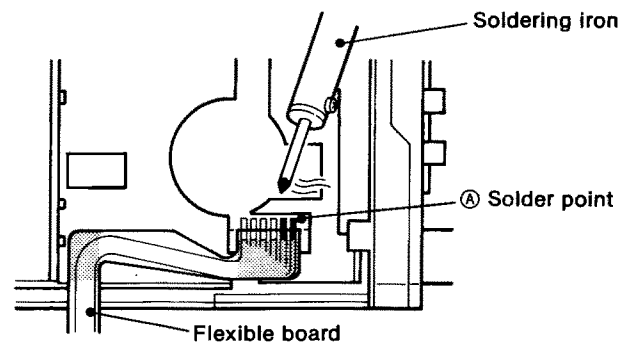

Fig. 5-1-4

ManualsPlus.com

5-2 SPEAKER DISASSEMBLY

1. Remove the 4 screws Ⓐ and the speaker plate as shown in Fig. 5-2-1 and Fig. 5-2-2.

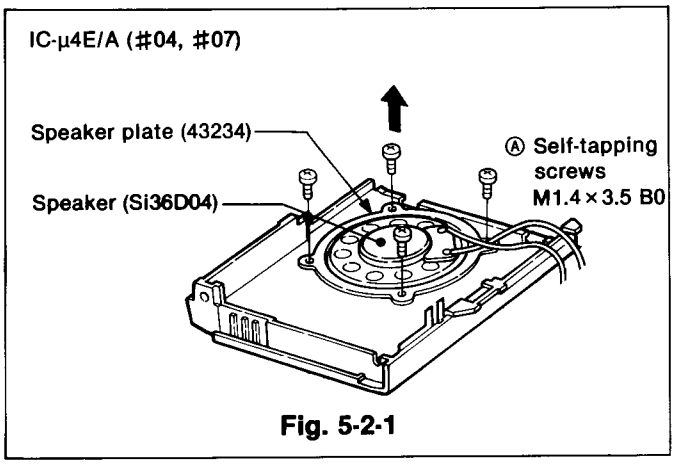

Fig. 5-2-1

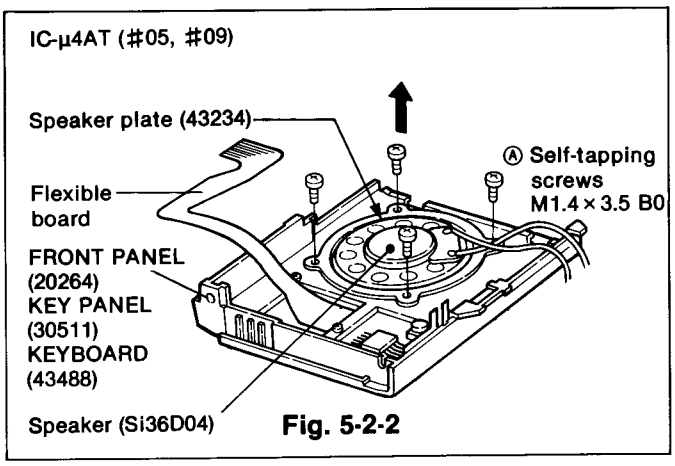

Fig. 5-2-2

5-3 REAR CASE DISASSEMBLY

1. Remove the battery terminal from the bottom case and remove the rear case as shown in Fig. 5-3-1.
2. Remove the shield plate.

NOTE: Be careful not to lose any parts during disassembly.

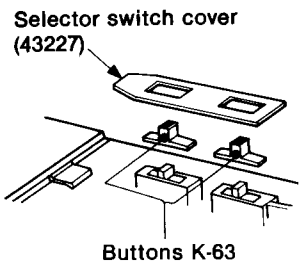

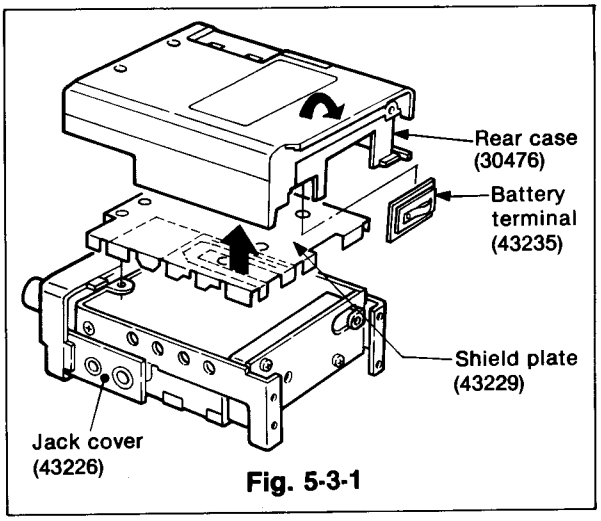

Fig. 5-3-1

ManualsPlus.com

5-4 TOP PANEL DISASSEMBLY

1. Remove the POWER/VOLUME CONTROL knob and the SQUELCH CONTROL knob.
2. Remove the TOP PANEL, making sure 4 hooks are free from the front and rear chassis.

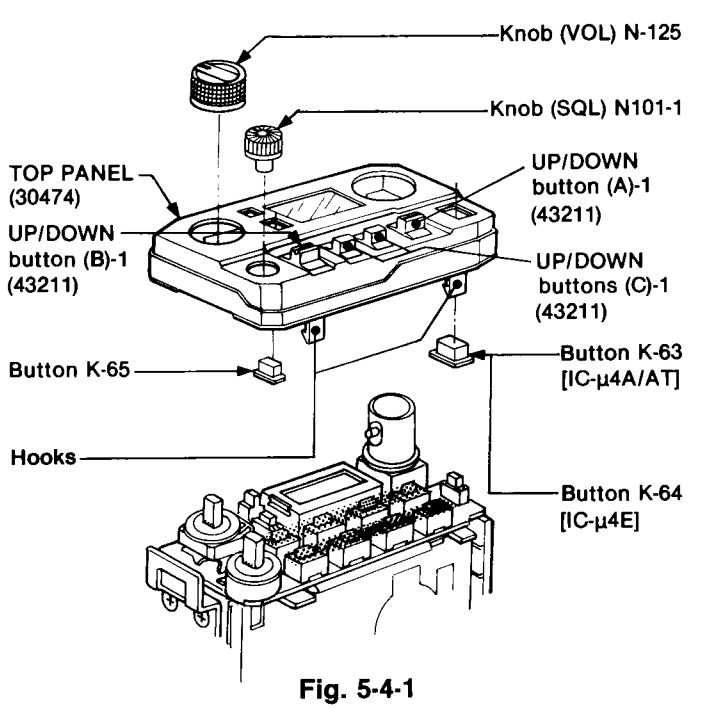

Fig. 5-4-1

5-5 TONE UNIT/TONE CALL UNIT DISASSEMBLY

1. Pull out the flexible board from the MAIN UNIT as shown in Fig. 5-5-1.

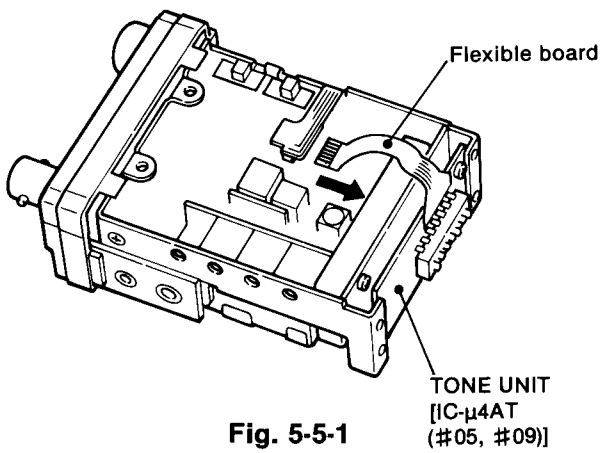

Fig. 5-5-1

2. Remove the screw Ⓐ and the TONE UNIT/TONE CALL UNIT as shown in Fig. 5-5-2.

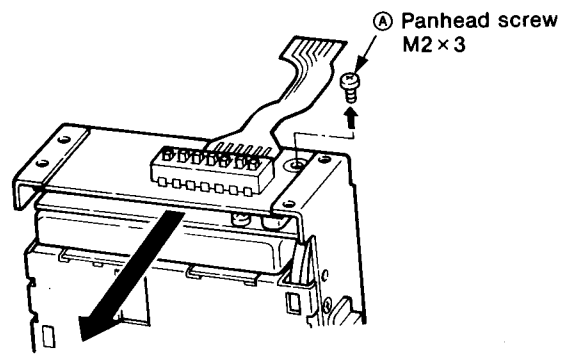

Fig. 5-5-2

ManualsPlus.com

SECTION 6 MAINTENANCE AND ADJUSTMENT

6-1 PREPARATION BEFORE SERVICING

1. Detach the power cord and turn OFF the POWER SWITCH before performing any work on the transceiver.

2. DO NOT short circuit components while making adjustments.

3. Use an insulated tuning tool for all adjustments.

4. DO NOT force any of the variable components. Turn them slowly and smoothly.

5. Follow the instructions exactly. If an indicated result is not obtained, repeat the instruction until the correct result is obtained.

6. Check the condition of connectors, solder joints and screws when adjustments are complete. Make sure components DO NOT touch each other.

7. Confirm defective operation of the transceiver first when checking an out-of-service unit. Verify that external sources DO NOT cause the problem.

8. Use the correct tools and test equipment.

9. Remove the transceiver case as shown in SECTION 5.

10. For transmission problems, attach a dummy load to the ANTENNA CONNECTOR. For reception problems, attach an antenna or signal generator to the ANTENNA CONNECTOR. DO NOT transmit into the signal generator.

11. Recheck for the suspected malfunction with the POWER SWITCH ON.

12. Check the defective circuit. Measure the DC voltages of the collector, base and emitter of each transistor.

13. There are different versions of this transceiver. Adjustment procedures and results may differ for each version. Be sure to follow the correct procedure for the transceiver you adjust.

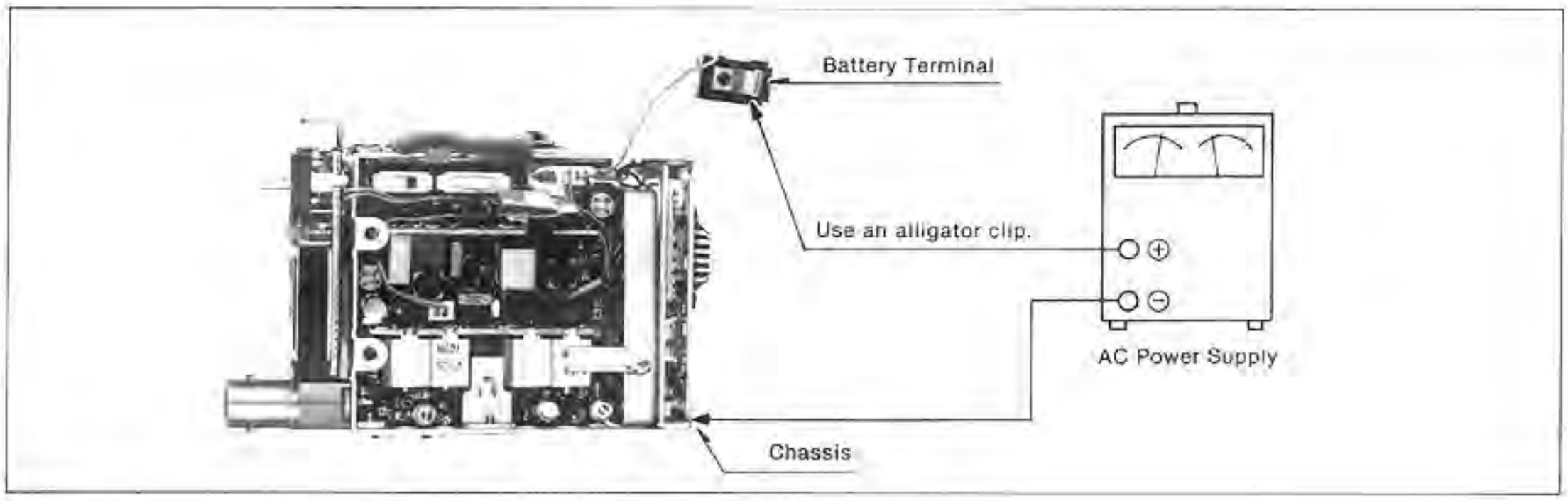

ManualsPlus.com

6-2 PLL ADJUSTMENT

TEST INSTRUMENTS REQUIRED	MEASUREMENT CONNECTION LOCATION
(1) AC POWER SUPPLY • Output voltage : 9V DC ±15% • Current capacity : 2A or more (2) FREQUENCY COUNTER • Frequency range : 0.1~500MHz • Frequency accuracy : ±1ppm or better • Sensitivity : 100mV or better (3) DC VOLTMETER • Input impedance : 50kΩ/DC or better	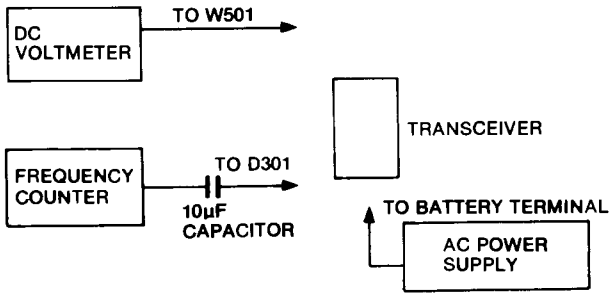

ADJUSTMENT		ADJUSTMENT CONDITIONS	MEASUREMENT		VALUE	ADJUSTMENT POINT	
			UNIT	LOCATION		UNIT	ADJUST
LOCK VOLTAGE	1	• Frequency display: 430.00MHz (#04, #07, #09) 440.00MHz (#05) • SIMPLEX/DUPLEX SELECTOR SWITCH: SIM • Receive mode	MAIN (1)	Connect a DC voltmeter to W501.	1.0V	VCO	C507*
	2	• Transmit mode			0.5~1.5V		Verify
LO FREQUENCY	1	• Frequency display: 435.00MHz (#04, #07, #09) 445.00MHz (#05) • Receive mode	RF	Connect a frequency counter to D301.	411.850MHz (#04, #07, #09) 421.850MHz (#05)	MAIN (2)	L101
	2	• Transmit mode			435.000MHz (#04, #07, #09) 445.000MHz (#05)		L102

* Remove the TONE UNIT or TONE CALL UNIT to adjust C507. Refer to SECTION 5-5 for removal.

ManualsPlus.com

UNIT LOCATIONS

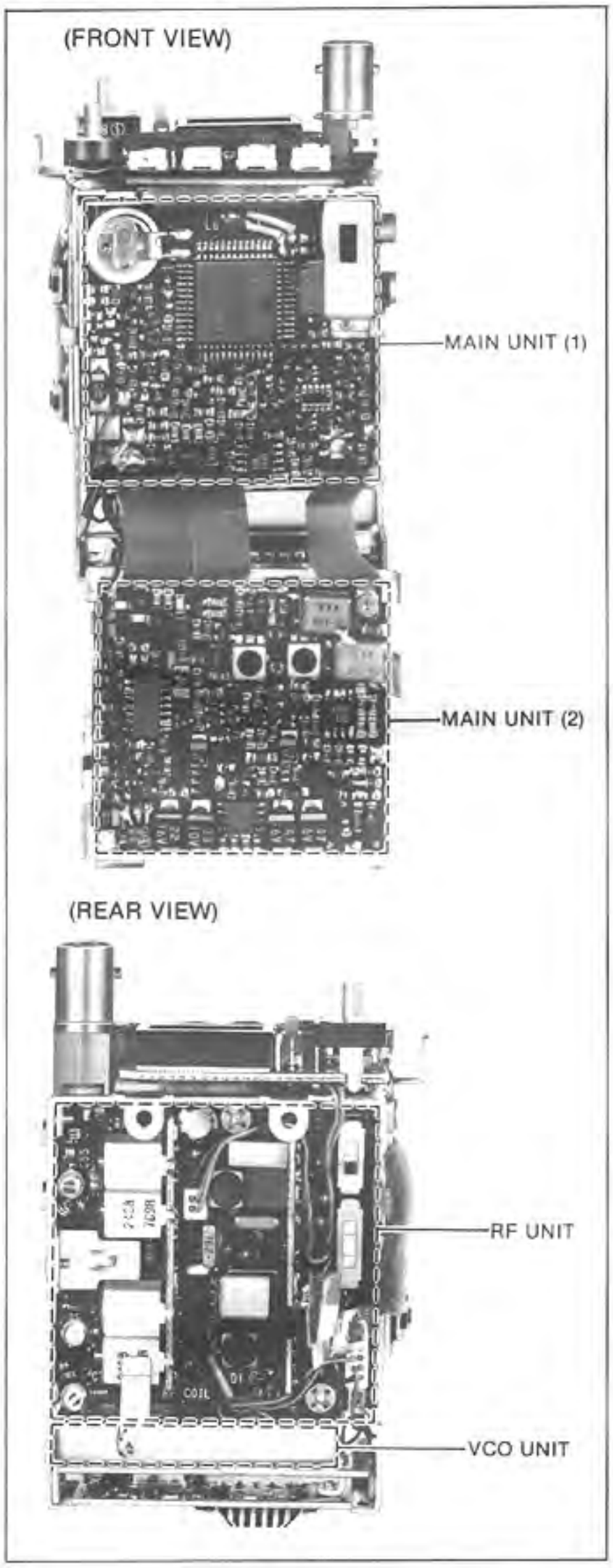

MAIN UNIT (1)

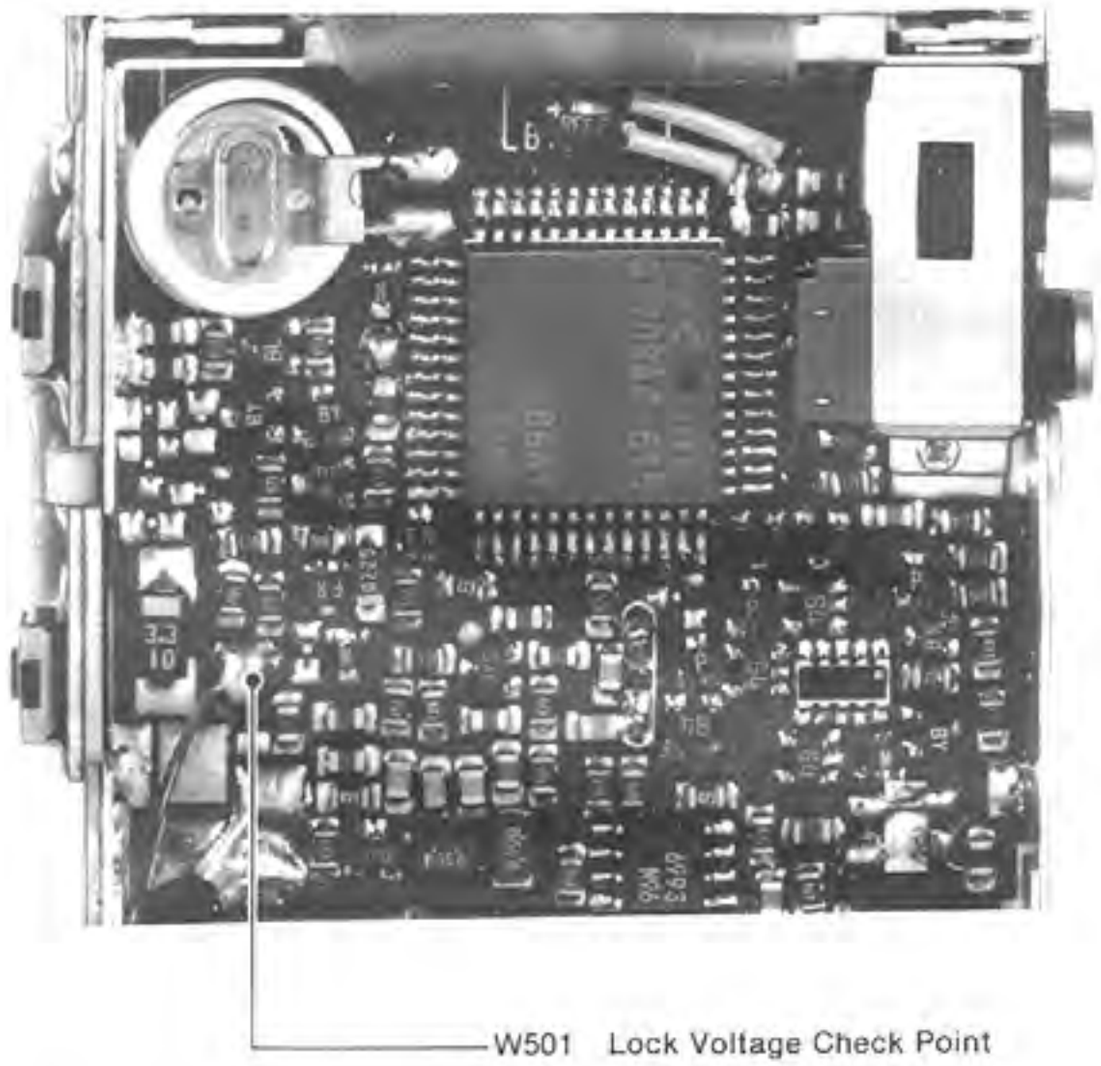

MAIN UNIT (2)

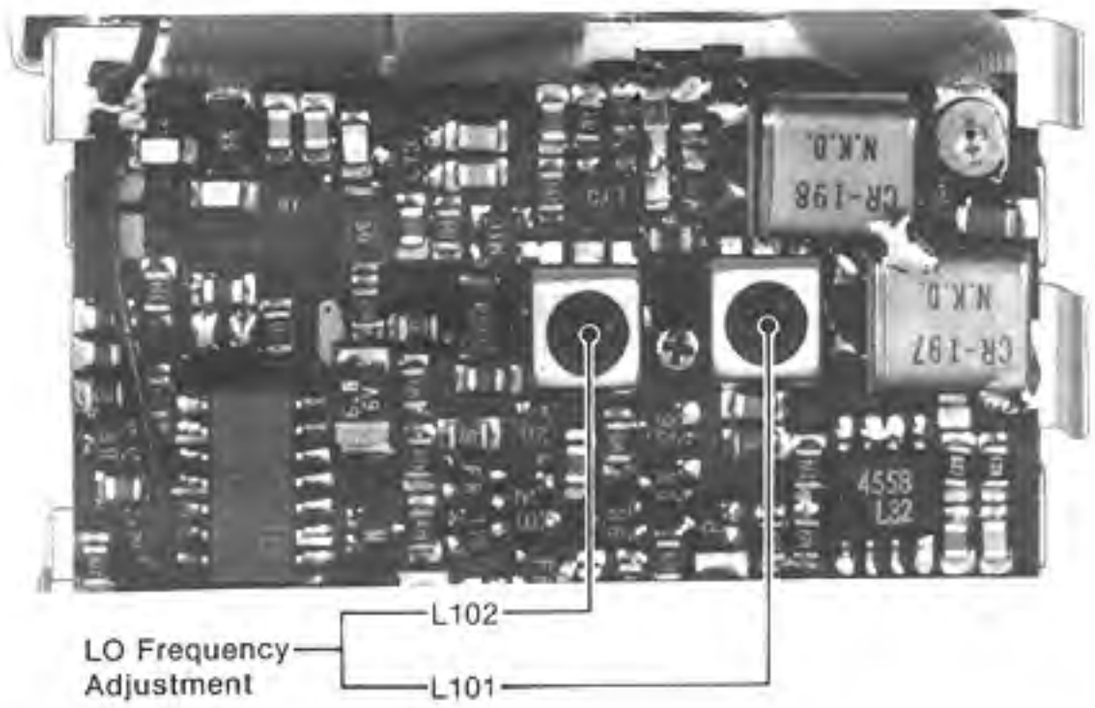

RF UNIT

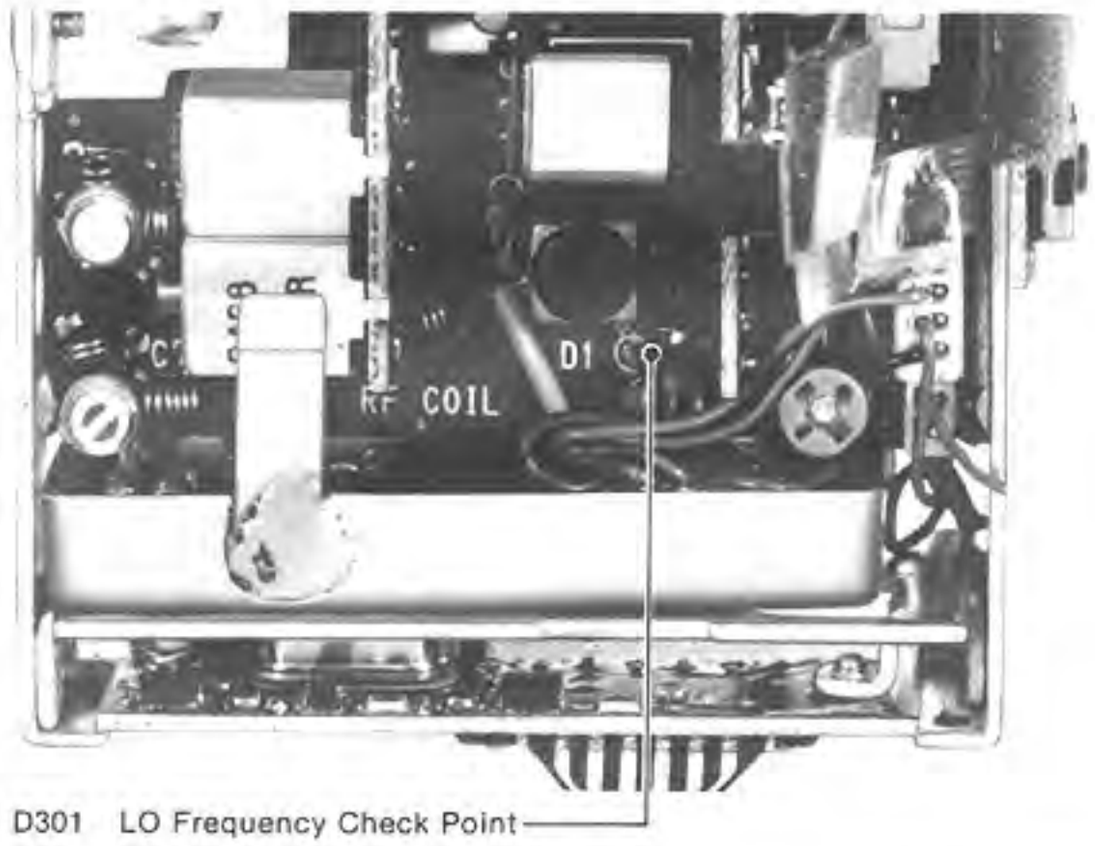

VCO UNIT

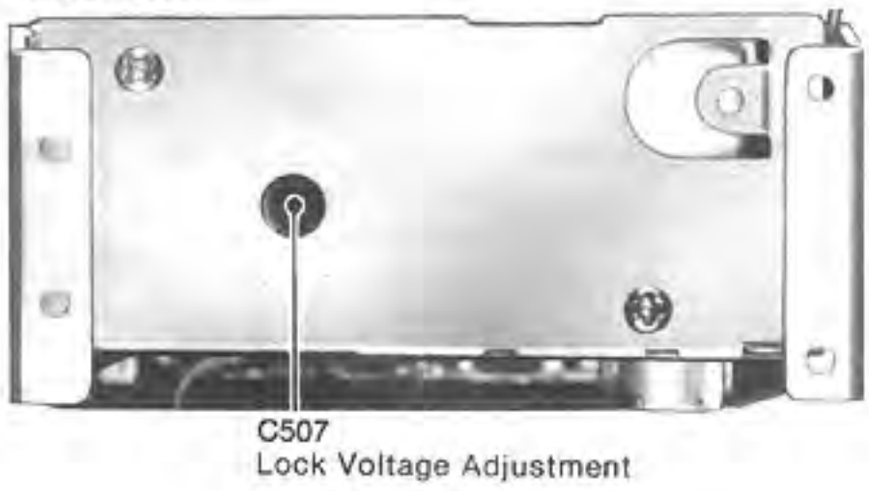

NOTE: For complete part numbers, "300" must be added to each binary numeral on the RF UNIT.

ManualsPlus.com

6-3 RECEIVER ADJUSTMENT

TEST INSTRUMENTS REQUIRED	MEASUREMENT CONNECTION LOCATION
(1) AC POWER SUPPLY • Output voltage : 8.4V DC (#04, #05, #07) 9.0V DC (#09) • Current capacity : 2A or more (2) STANDARD SIGNAL GENERATOR (SSG) • Frequency range : 0.1~500MHz • Output level : −127~−17dBm (0.1μV~32mV) (3) DC VOLTMETER • Input impedance : 50kΩ/DC or better (4) SINAD METER (5) EXTERNAL SPEAKER • Impedance : 8Ω	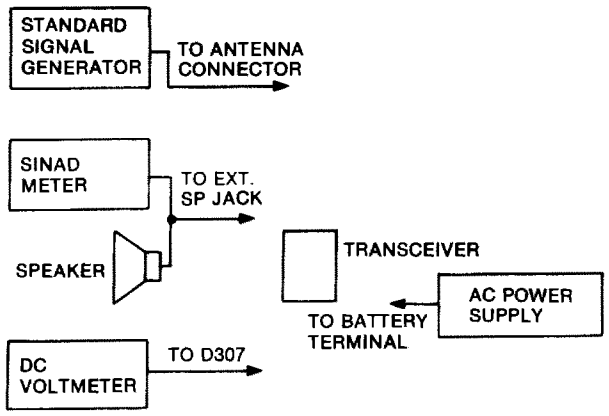

ADJUSTMENT		ADJUSTMENT CONDITIONS	MEASUREMENT		VALUE	ADJUSTMENT POINT	
			UNIT	LOCATION		UNIT	ADJUST
SENSITIVITY	1	• Frequency display: 435.00MHz (#04, #07, #09) 445.00MHz (#05) • SIMPLEX/DUPLEX SELECTOR SWITCH: SIM • Apply an RF signal to the ANTENNA CONNECTOR. Level: −107dBm (1μV) Dev. : ±3.5kHz Mod. : 1kHz • SQUELCH CONTROL: Max. CCW • Receive mode	RF	Connect a DC voltmeter to the cathode of D307.	Maximum	RF	L307, L309, L310, L311
	2	• Apply an RF signal to the ANTENNA CONNECTOR. Level: −119dBm (0.25μV) Dev. : ±3.5kHz Med. : 1kHz	SIDE PANEL	Connect a SINAD meter with an 8Ω load to the EXT. SP JACK.	Maximum		L309 (nearest to transceiver bottom)
	3	• Apply an RF signal to the ANTENNA CONNECTOR. Level: −119dBm (0.25μV) Mod. : OFF • Adjust the applied frequency ±6kHz of the center frequency.			Verify and adjust the tolerance of sensitivity within ±3dBm.		L310, L311
S-LEVEL INDICATOR	1	• Apply an RF signal to the ANTENNA CONNECTOR. Level: −107dBm (1μV) Dev. : ±3.5kHz Mod. : 1kHz	TOP PANEL	S-LEVEL/POWER SELECTOR INDICATOR.	2 dots	RF	R336

CCW: Counterclockwise

ManualsPlus.com

RF UNIT

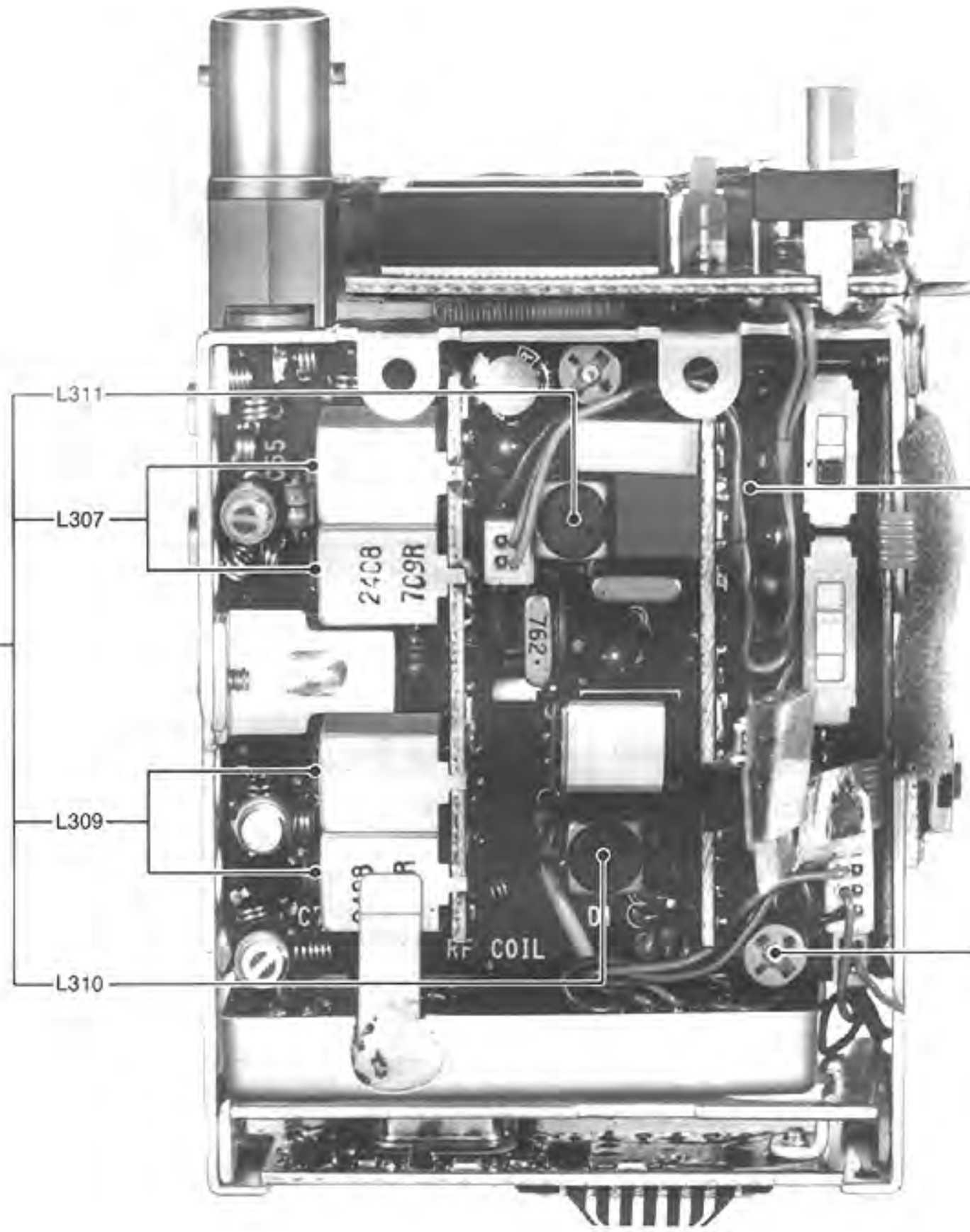

NOTE: For complete part numbers, "300" must be added to each binary numeral on the RF UNIT.

ManualsPlus.com

6-4 TRANSMITTER ADJUSTMENT

TEST INSTRUMENTS REQUIRED	MEASUREMENT CONNECTION LOCATION
(1) AC POWER SUPPLY • Output voltage : 8.4V DC (#04, #05, #07) 9.0V DC (#09) • Current capacity : 2A or more (2) RF POWER METER (TERMINATED TYPE) • Measuring range : 2W • Frequency range : 400~500MHz • Impedance : 50Ω • SWR : Less than 1:1.2 (3) AMMETER • Measurement capability : 1A (4) AF GENERATOR (AG) • Frequency range : 200~2000Hz • Output level : 0~200mV (5) AC MILLI-VOLTMETER • Measuring range : 2~200mV (6) FM DEVIATION METER • Frequency minimum : 500MHz • Measuring range : 0~±5kHz	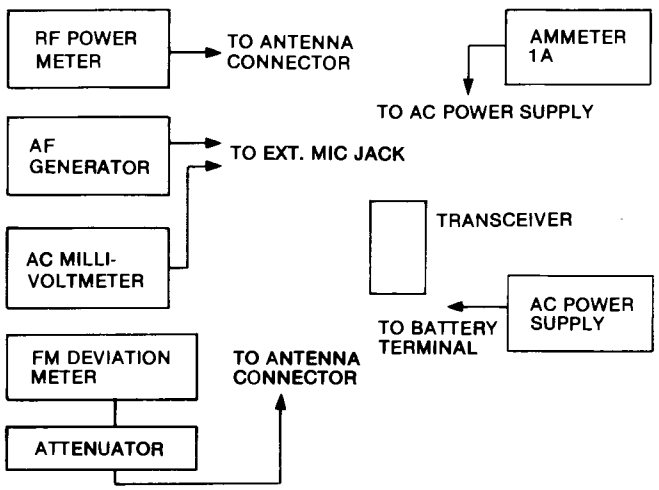

ADJUSTMENT		ADJUSTMENT CONDITIONS	MEASUREMENT		VALUE	ADJUSTMENT POINT	
			UNIT	LOCATION		UNIT	ADJUST
OUTPUT POWER	1	• Frequency display: 435.00MHz (#04, #07, #09) 445.00MHz (#05) • RF OUTPUT POWER SELECTOR SWITCH: HIGH • SIMPLEX/DUPLEX SELECTOR SWITCH: SIM • Transmit mode	TOP PANEL	Connect an RF power meter to the ANTENNA CONNECTOR.	Adjust to maximum output.	RF	C377, C350, C355
	2		BOTTOM PANEL	Connect an ammeter between the AC power supply and the transceiver.	Less than 600mA		C355
	3	• RF OUTPUT POWER SELECTOR SWITCH: LOW	TOP PANEL	Connect an RF power meter to the ANTENNA CONNECTOR.	0.1W		R330
		NOTE: Repeat above adjustment 1 several times.					
DEVIATION	1	• Frequency display: 435.00MHz (#04, #07, #09) 445.00MHz (#05) • RF OUTPUT POWER SELECTOR SWITCH: HIGH • SIMPLEX/DUPLEX SELECTOR SWITCH: SIM • Apply an AF signal to the EXT. MIC JACK. Level: 1kHz/40mV (#04, #07, #09) 1kHz/100mV (#05) • FM deviation meter HPF : 50Hz LPF : 20kHz De-emphasis : OFF Deviation sense: P-P/2 • Transmit mode	TOP PANEL	Connect an FM deviation meter to the ANTENNA CONNECTOR through an attenuator.	±4.8kHz	MAIN (2)	R183

ManualsPlus.com

RF UNIT

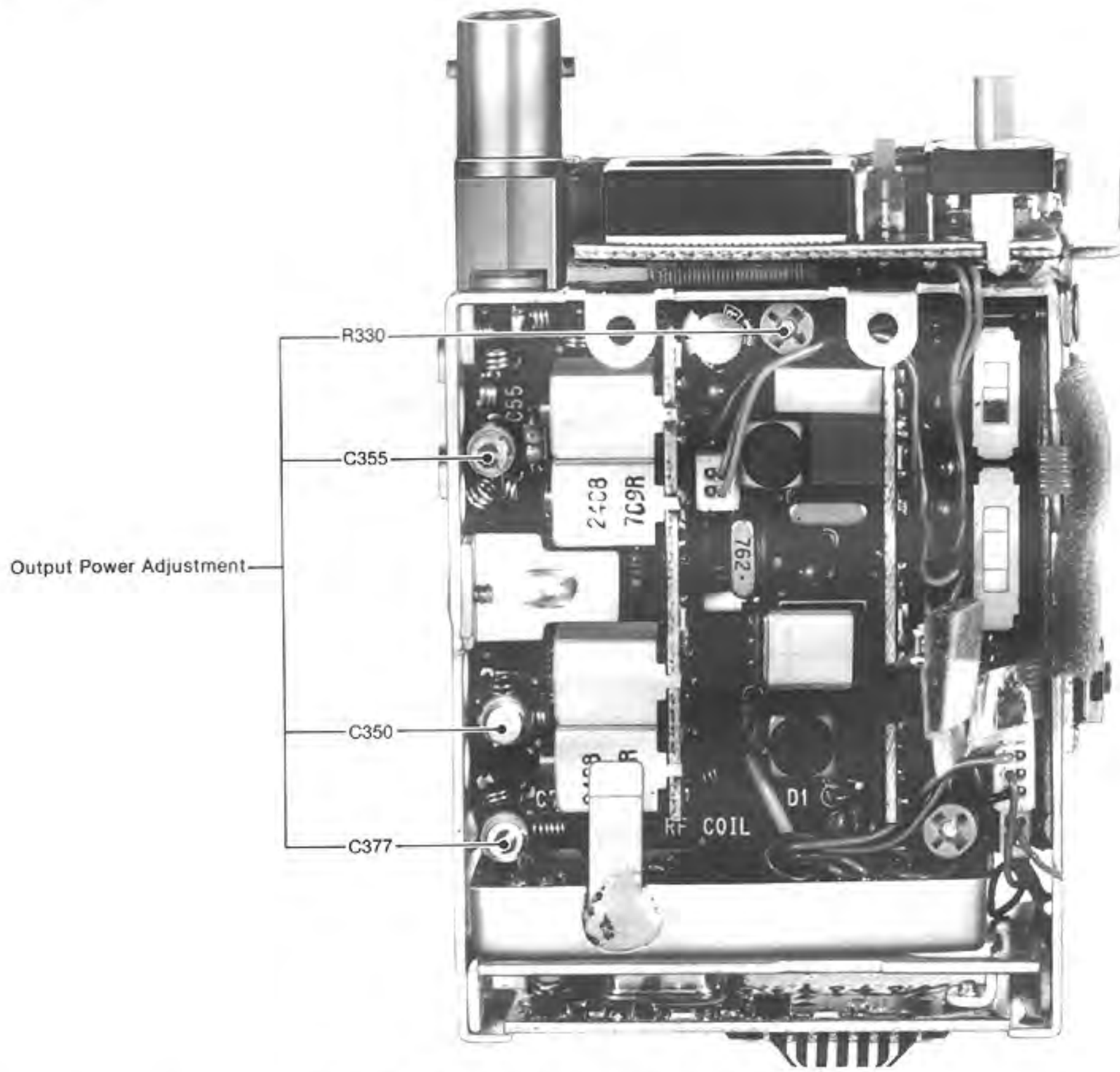

NOTE: For complete part numbers, "300" must be added to each binary numeral on the RF UNIT.

UNIT LOCATION

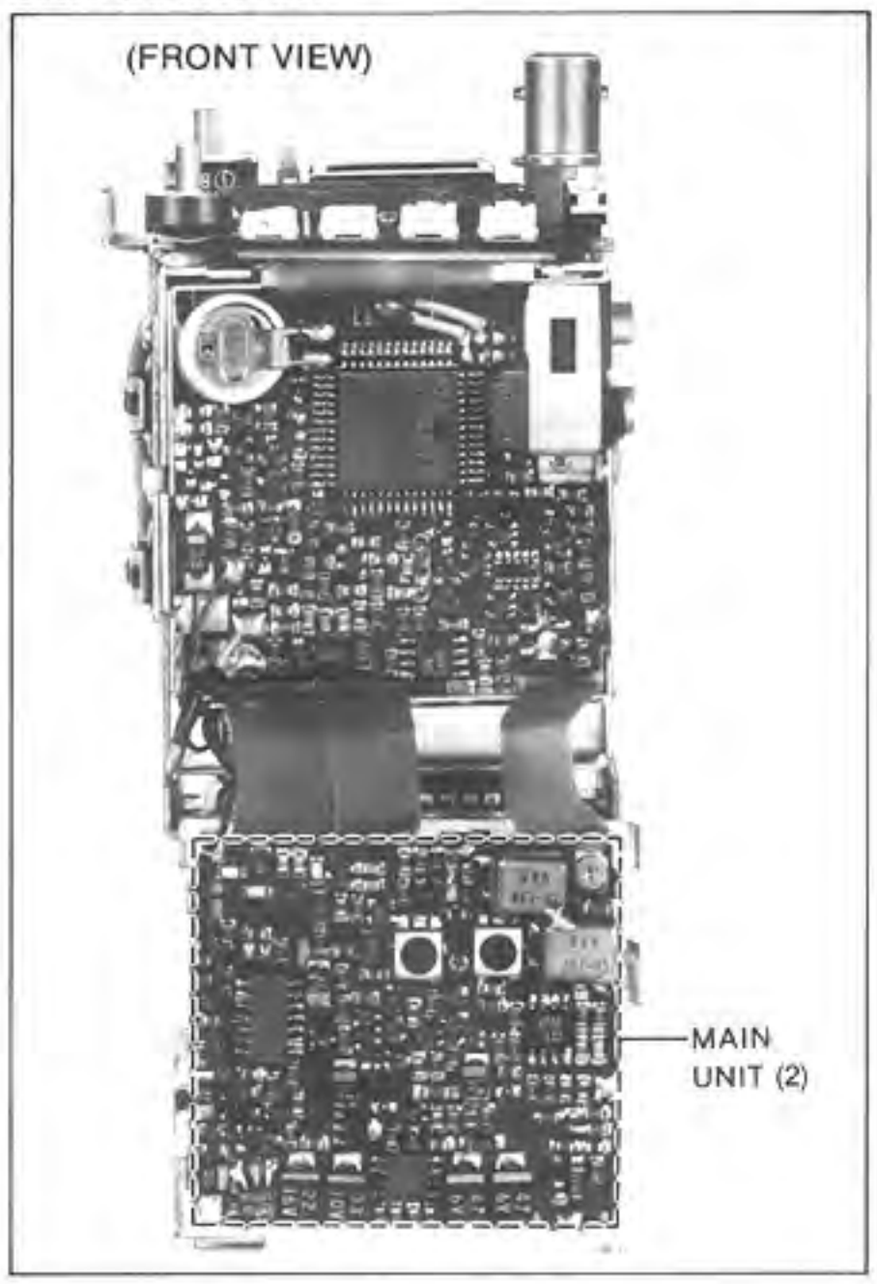

MAIN UNIT (2)

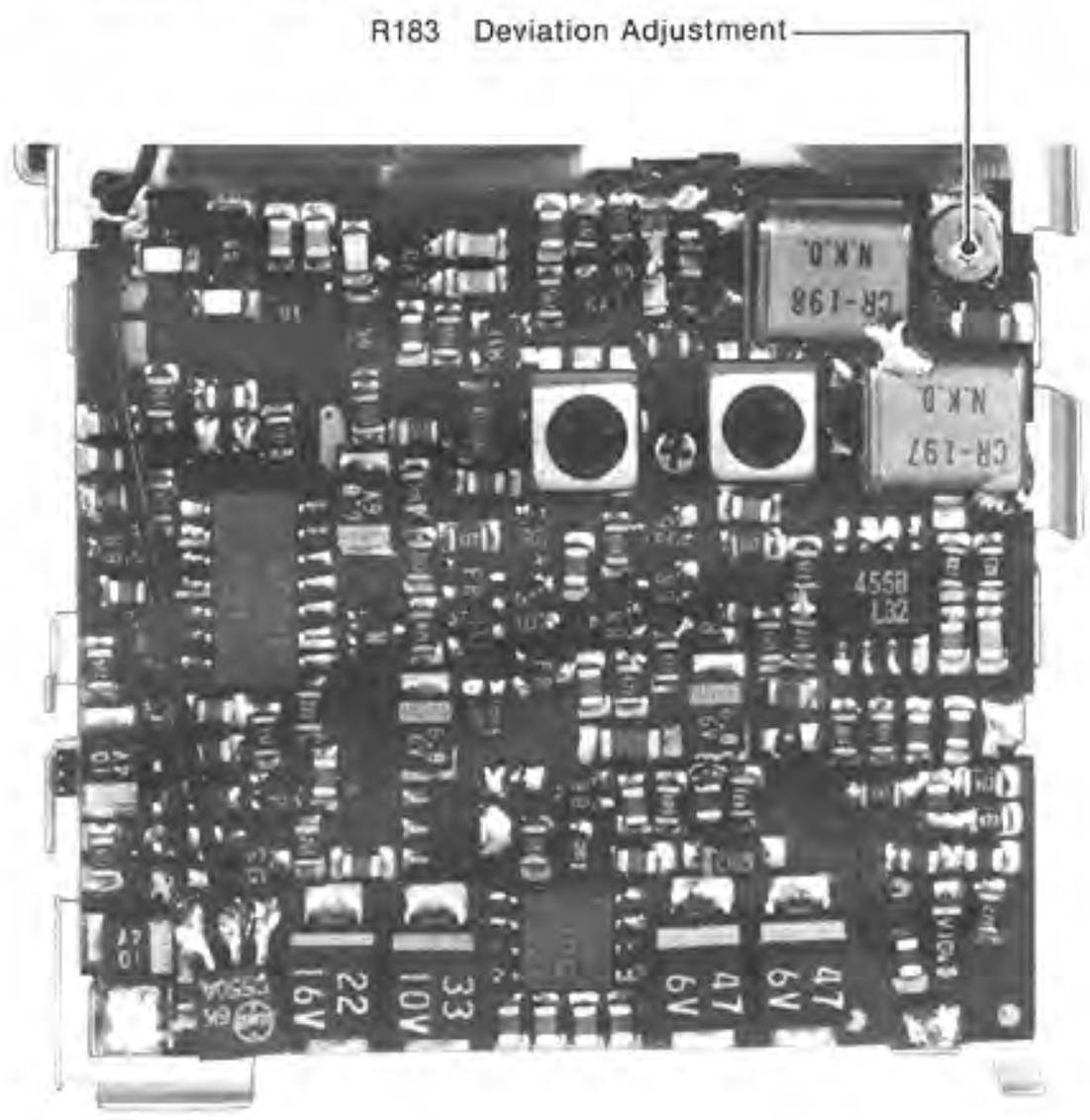

ManualsPlus.com

6-5 SUBAUDIBLE TONE, DTMF AND TONE CALL ADJUSTMENT

TEST INSTRUMENTS REQUIRED	MEASUREMENT CONNECTION LOCATION
(1) AC POWER SUPPLY • Output voltage : 8.4V DC (#04, #05) 9.0V DC (#09) • Current capacity : 2A or more (2) FM DEVIATION METER • Frequency minimum : 500MHz • Measuring range : 0～±5kHz	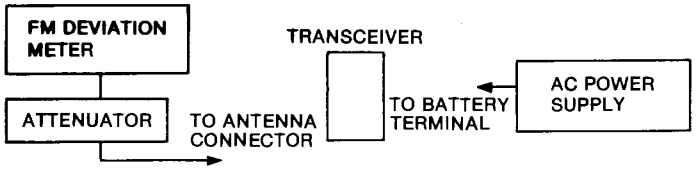

ADJUSTMENT		ADJUSTMENT CONDITIONS	MEASUREMENT		VALUE	ADJUSTMENT POINT	
			UNIT	LOCATION		UNIT	ADJUST
SUBAUDIBLE TONE (#05, #09)	1	• Frequency display: 445.00MHz (#05) 435.00MHz (#09) • RF OUTPUT POWER SELECTOR SWITCH: HIGH • SIMPLEX/DUPLEX SELECTOR SWITCH: SIM • S701 P4: ON P7: ON • SUBAUDIBLE TONE ON/OFF SWITCH: ON (#05 only) • Apply no AF signal to the EXT. MIC JACK. • FM deviation meter HPF : OFF LPF : 20kHz De-emphasis : OFF Deviation sense: P-P/2 • Transmit mode	TOP PANEL	Connect an FM deviation meter to the ANTENNA CONNECTOR through an attenuator.	±0.75kHz	TONE	R701
		NOTE: After adjustment, turn P7 of S701 OFF.					
DTMF (#05, #09)	1	• SUBAUDIBLE TONE ON/OFF SWITCH: OFF • Push and hold the PTT SWITCH and "D" key.	TOP PANEL	Connect an FM deviation meter to the ANTENNA CONNECTOR through an attenuator.	±3.5kHz	DTMF	R602
TONE CALL (#04)	1	• Frequency display: 435.00MHz • TONE CALL SWITCH: ON			±3.5kHz	TONE CALL	R801

ManualsPlus.com

UNIT LOCATION

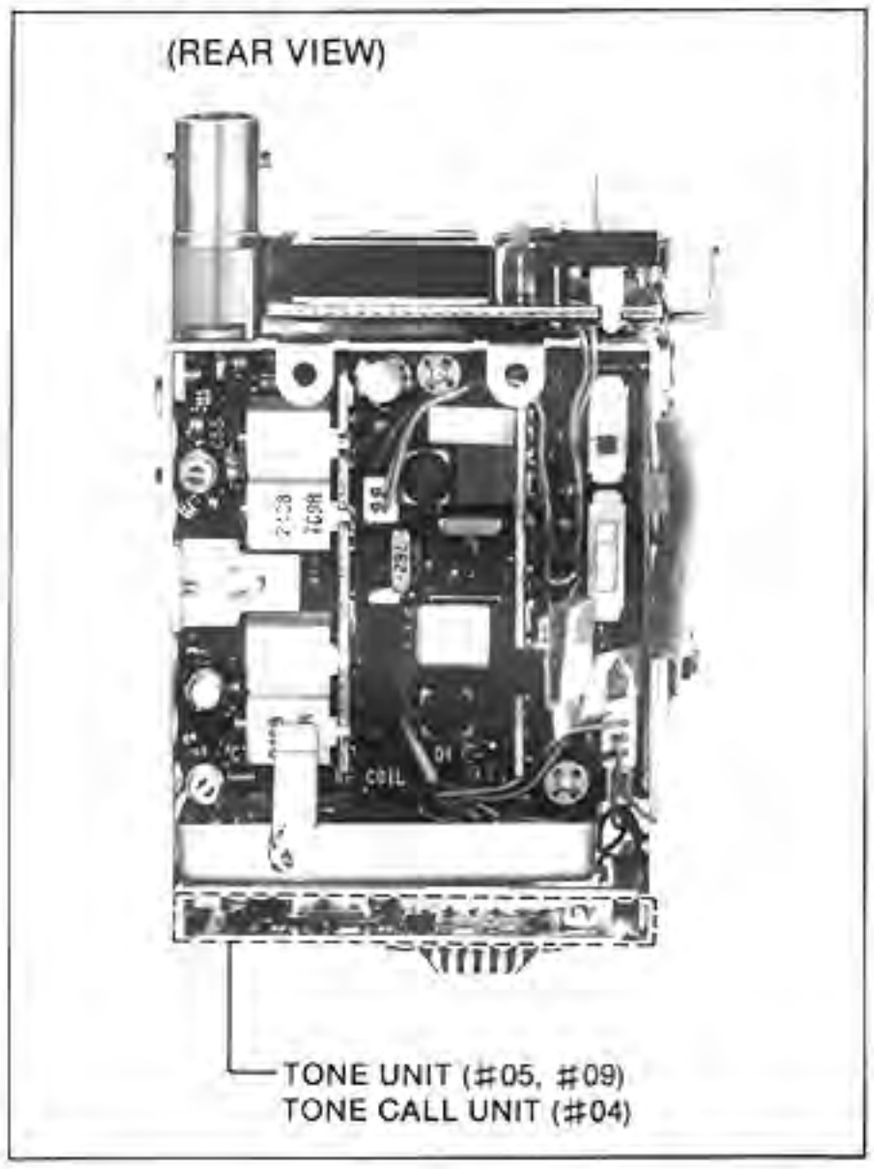

TONE UNIT (#05, #09)

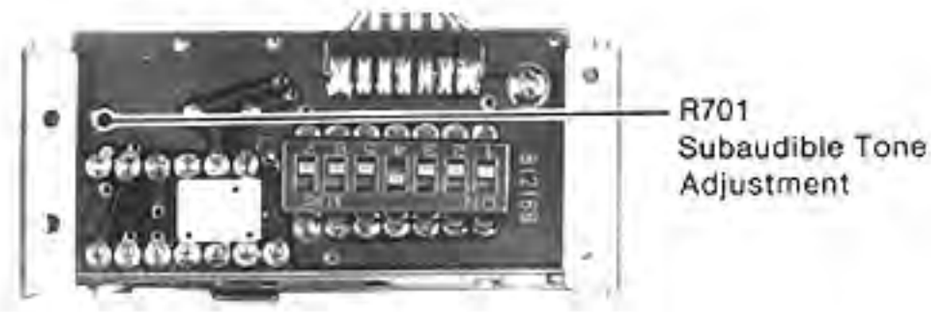

TONE CALL UNIT (#04)

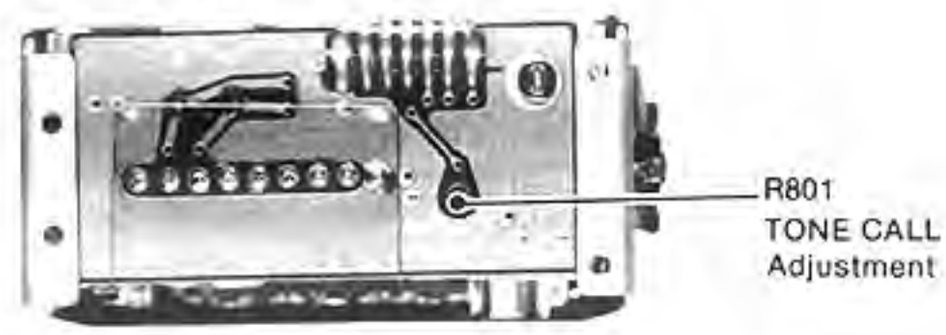

DTMF UNIT (#05, #09)

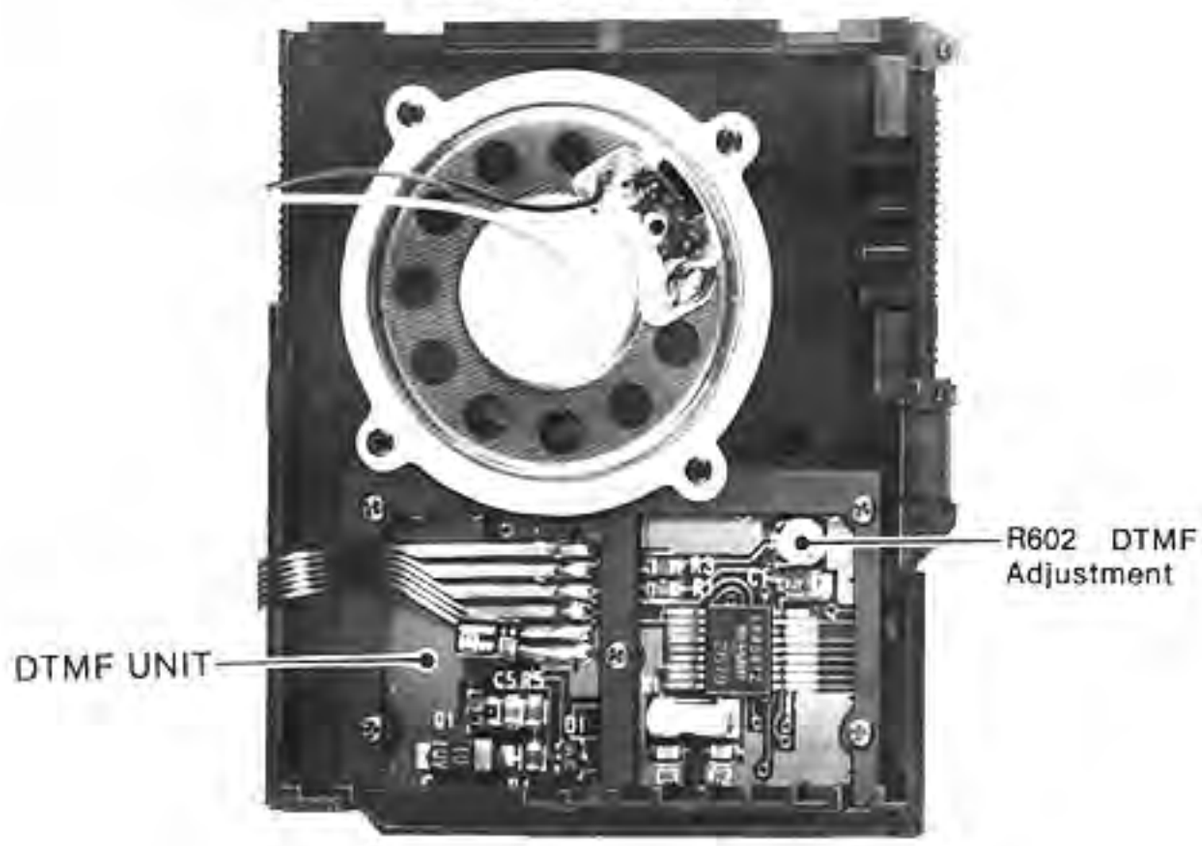

NOTE: For complete part numbers, "600" must be added to each binary numeral on the DTMF UNIT.

ManualsPlus.com

SECTION 7 BOARD LAYOUTS

7-1 INTERCONNECTIONS

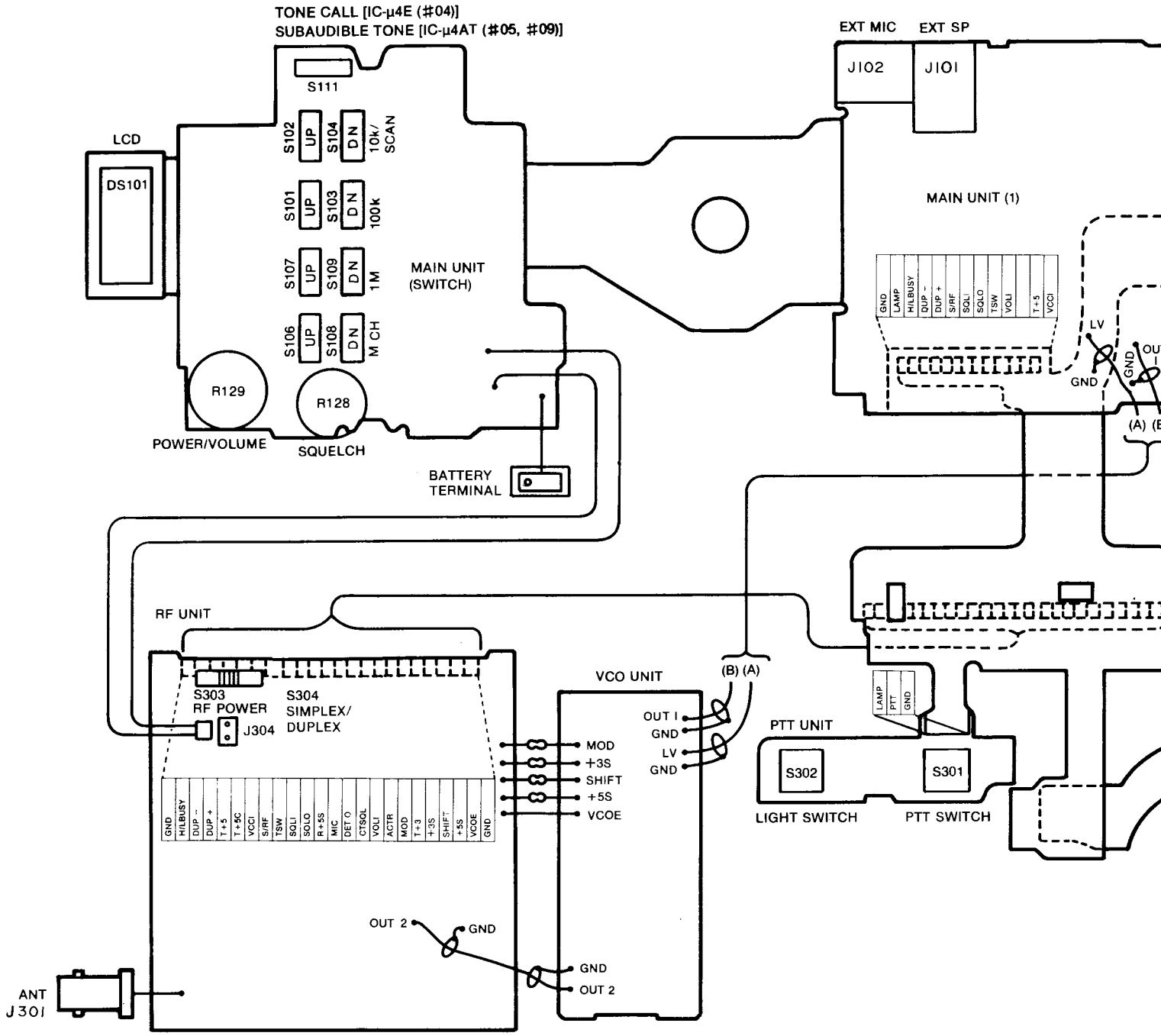

ManualsPlus.com

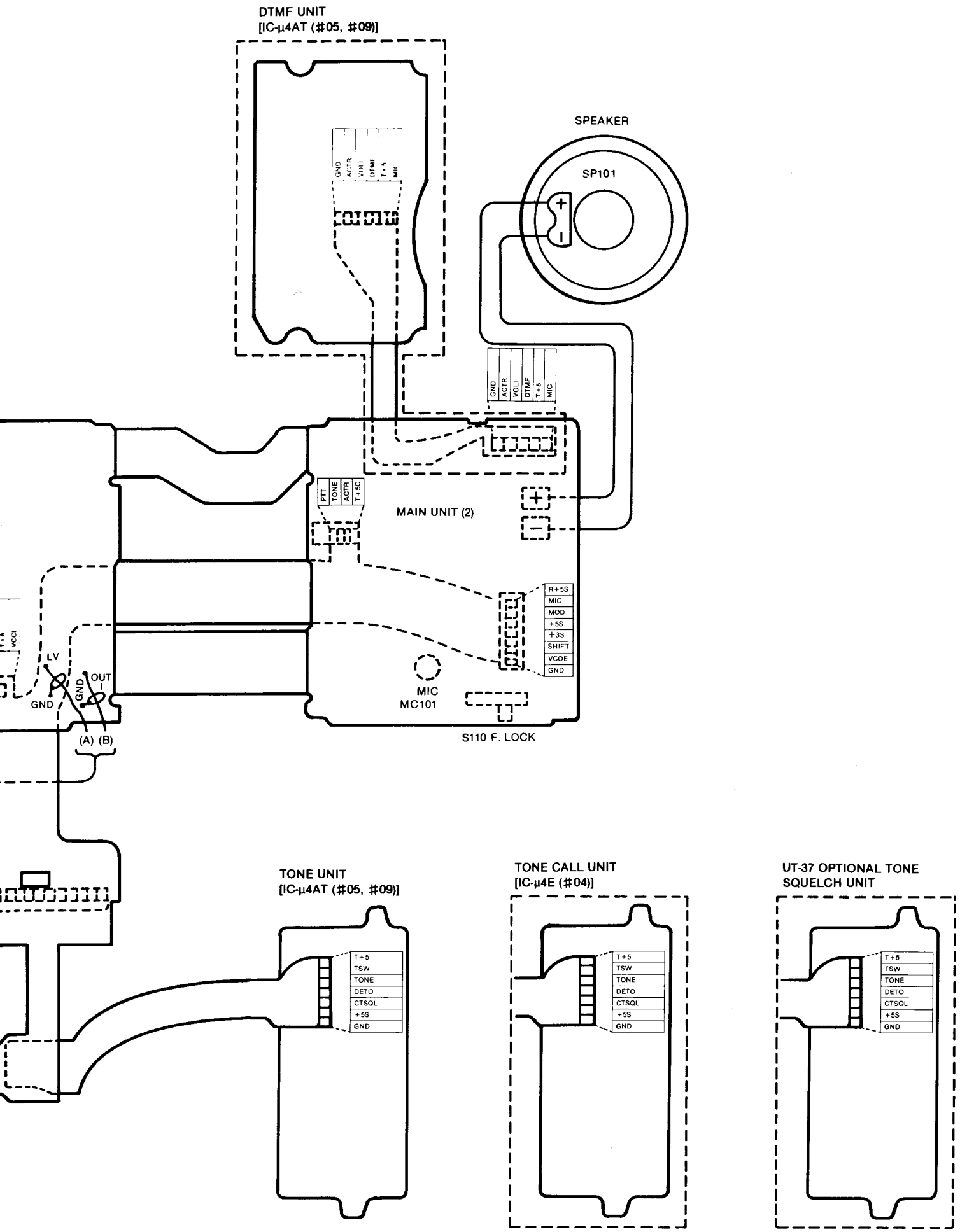

ManualsPlus.com

7-2 MAIN UNIT

IC		
IC101	**μPD1708AG-675-00** (CPU)	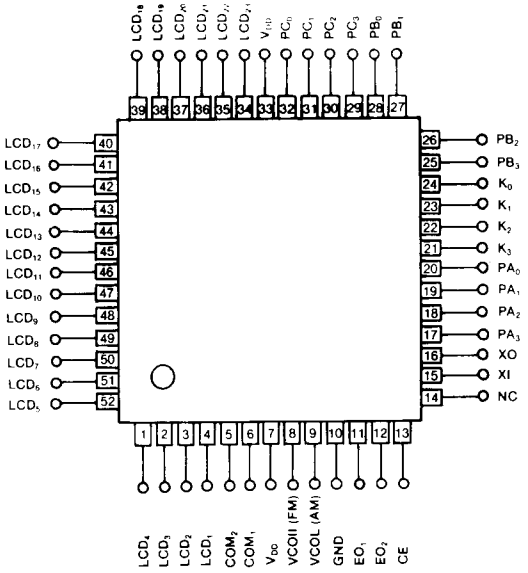
IC102	**LVC550A** **(3-TERMINAL POSITIVE VOLTAGE REGULATOR)**	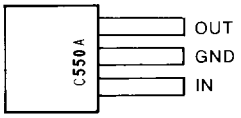
IC103	**LC4001BM** (QUAD 2-INPUT NOR GATE)	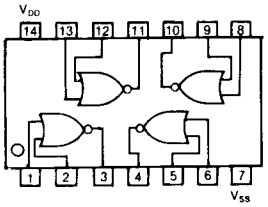
IC104	**BA6993F** (DUAL COMPARATOR)	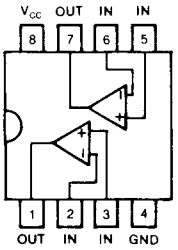
IC105	**NJM386M** (AUDIO AMPLIFIER)	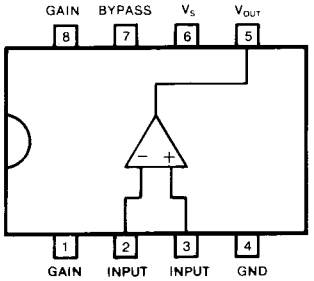

ManualsPlus.com

IC

IC106	**BA4558F** (DUAL OPERATION AMPLIFIER)	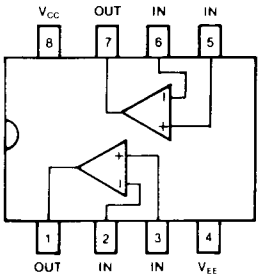

TRANSISTORS

2SC3770 rank 3 Q104, Q105 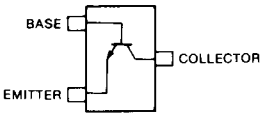 Symbol: JY3	**2SC3772 rank 3** Q101, Q102, Q103 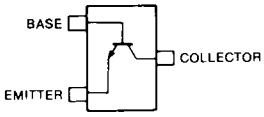 Symbol: LY3	**2SK209 rank O** Q114 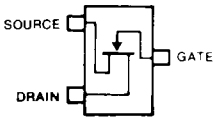 Symbol: XO	**2SC2712** Q126 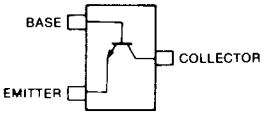 Symbol: LY
2SA1341 Q108 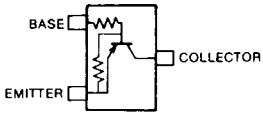 Symbol: BL	**2SC3395** Q109, Q110, Q133 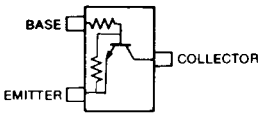 Symbol: BY	**2SA1162** Q112 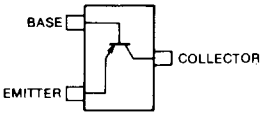 Symbol: SY	**DTA143ZU** Q124 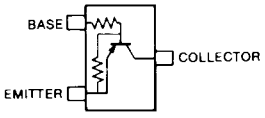 Symbol: 113
2SB798 rank DK Q127 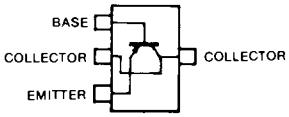 Symbol: DL	**FMG4** Q129, Q130, Q131, Q132 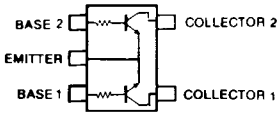 Symbol: G4	**DTC144EU** Q116, Q118 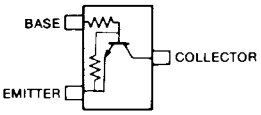 Symbol: 26	**2SA1576 rank R** Q115, Q117, Q123, Q125 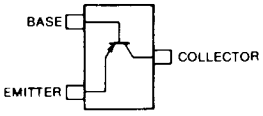 Symbol: FR
2SC4081 rank R Q111, Q113, Q119, Q120, Q121, Q122, Q128, Q134 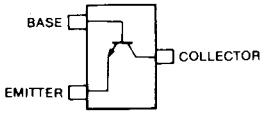 Symbol: BR			

DIODES

MA862 D101 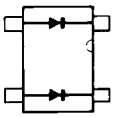 Symbol: M1I	**1SS181** D102, D115, D116, D120 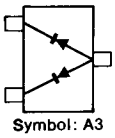 Symbol: A3	**RD5.1 B3** D105 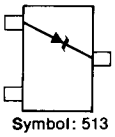 Symbol: 513	**DAP202U** D103, D119, D123, D126, D128 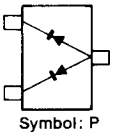 Symbol: P	**DAN202U** D104, D106, D108, D112, D127, D129 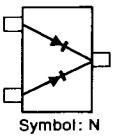 Symbol: N
1SS193 D113 (#05), D114 (#04, #07, #09) 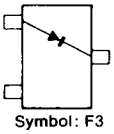 Symbol: F3	**1SS190** D107 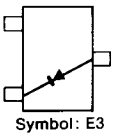 Symbol: E3	**SLM-13MW** D117, D118 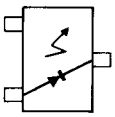	**1SS196** D113 (#04), D114 (#05) 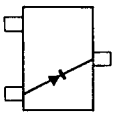 Symbol: G3	**1SS187** D120 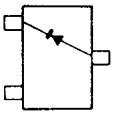 Symbol: D3

ManualsPlus.com

• MAIN UNIT

COMPONENTS SIDE

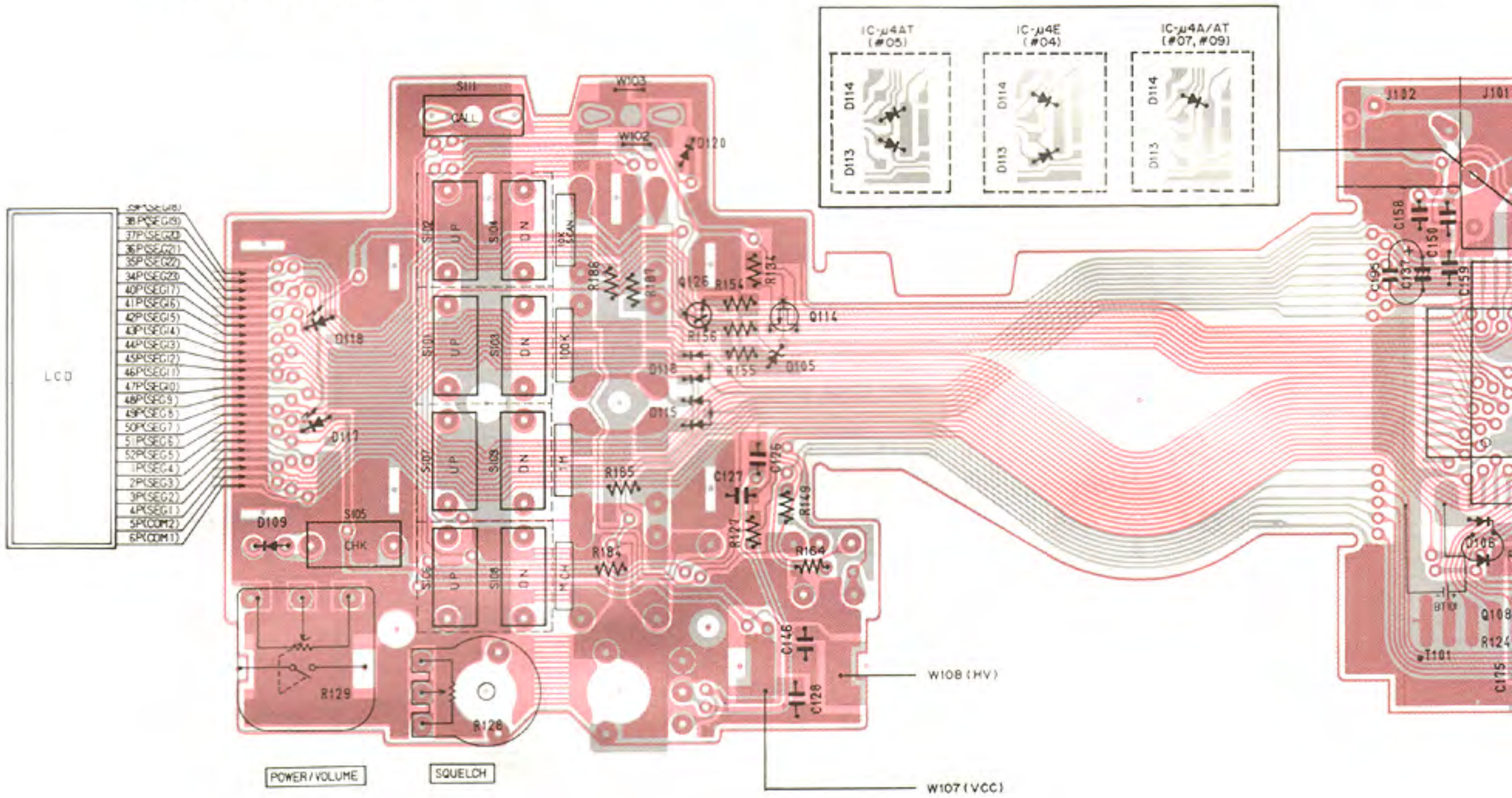

FOIL SIDE

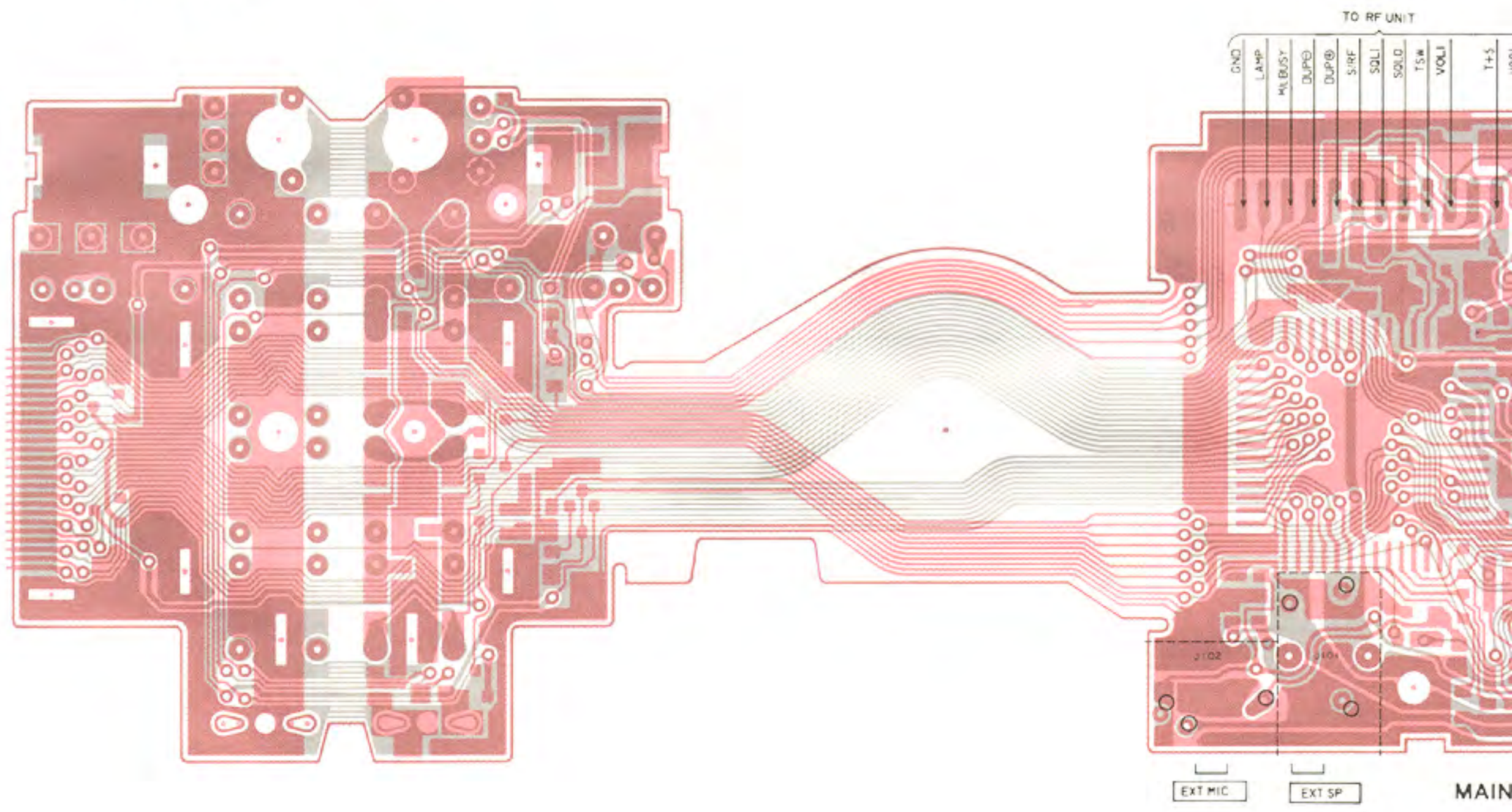

MAIN

ManualsPlus.com

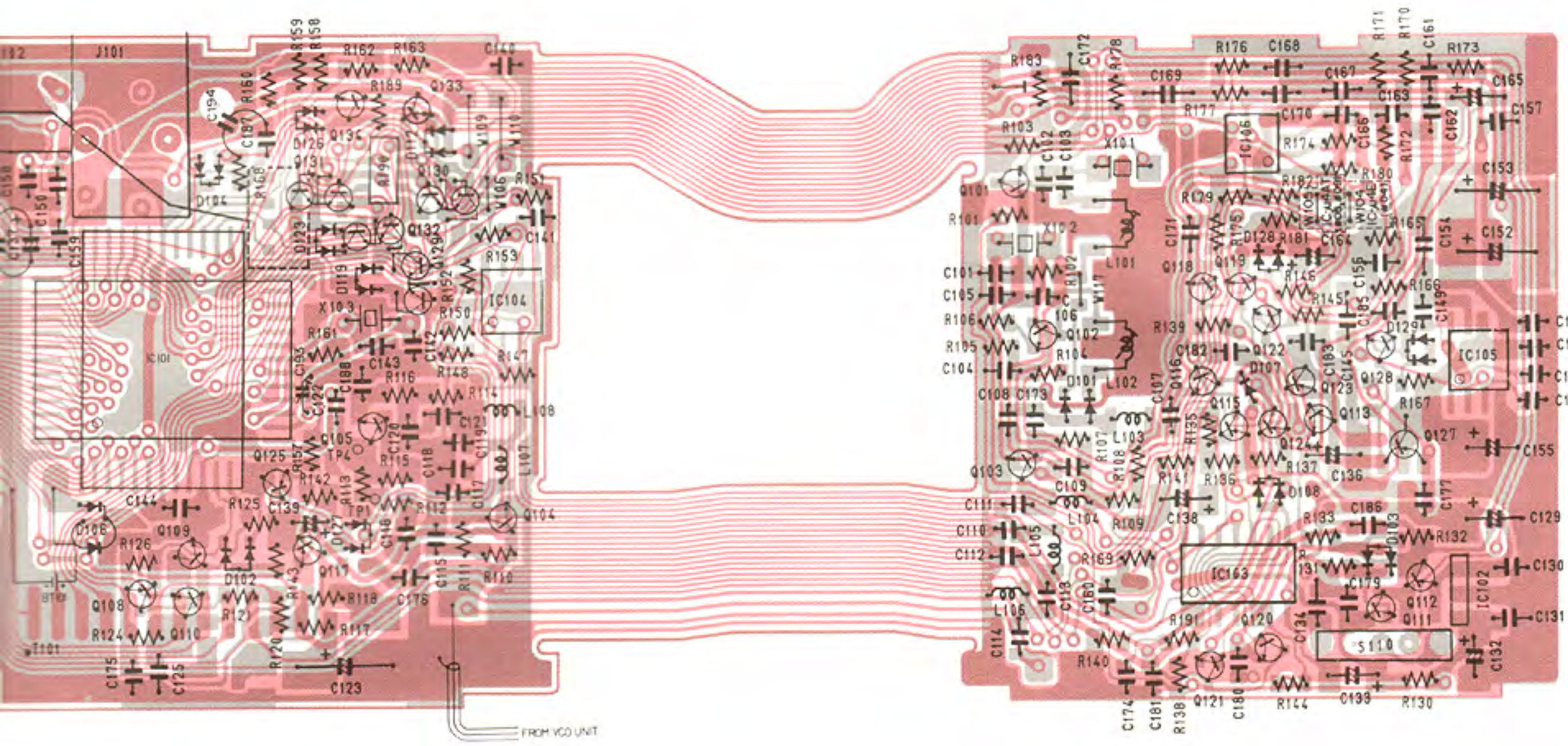

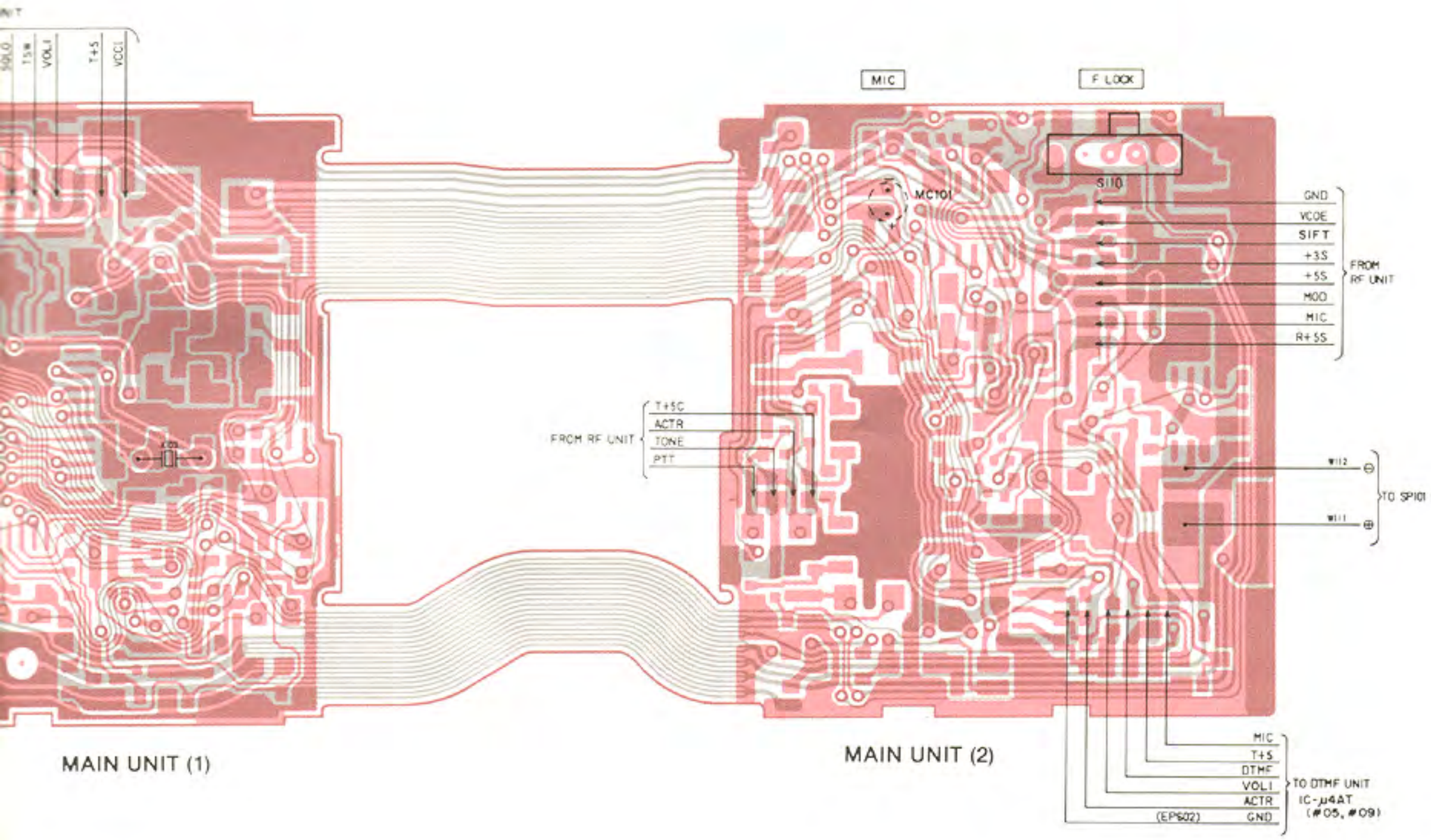

MAIN UNIT (1)

MAIN UNIT (2)

ManualsPlus.com

7-3 RF UNIT, RF COIL UNIT, IF UNIT

IC

IC301	**MC3357D** (LOW POWER FM IF)	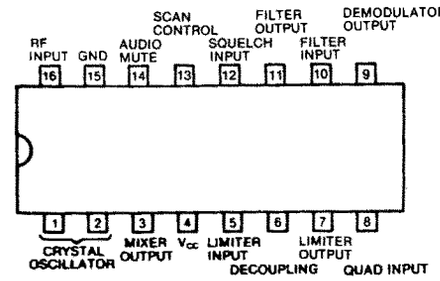

TRANSISTORS

2SB798 rank DK Q313 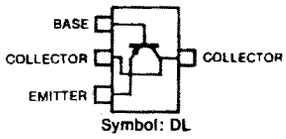 Symbol: DL	**2SC3770 rank 3** Q303, Q308, Q309 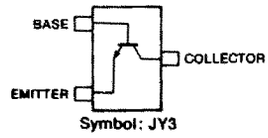 Symbol: JY3	**2SC2712 rank BL** Q310, Q312, Q314, Q315, Q316, Q317, Q320 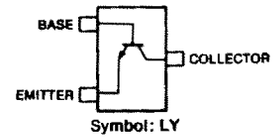 Symbol: LY	**2SC3772 rank 3** Q301, Q302, Q304, Q322 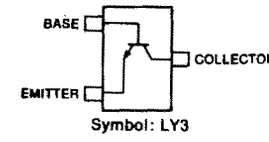 Symbol: LY3
2SC2407 Q305 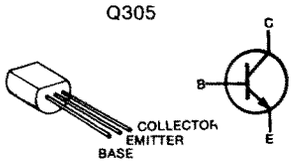	**2SC4167-01** Q307 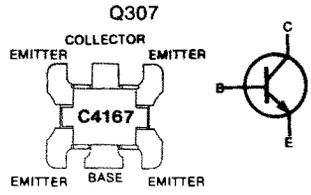	**2SA1162** Q318, Q319, Q321 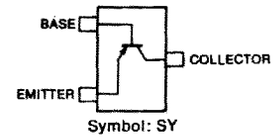 Symbol: SY	**2SC3019** Q306 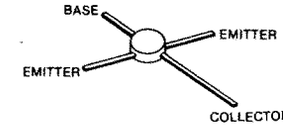

DIODES

MA862 D303 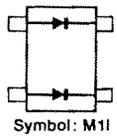 Symbol: M1I	**HSM88AS** D306, D308 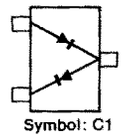 Symbol: C1	**1SS187** D311 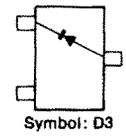 Symbol: D3	**1SS153** D302 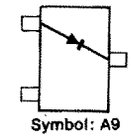 Symbol: A9
1SS184 D310, D316 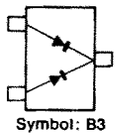 Symbol: B3	**1SS196** D305 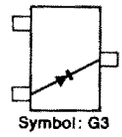 Symbol: G3		

ManualsPlus.com

• RF UNIT

COMPONENTS SIDE

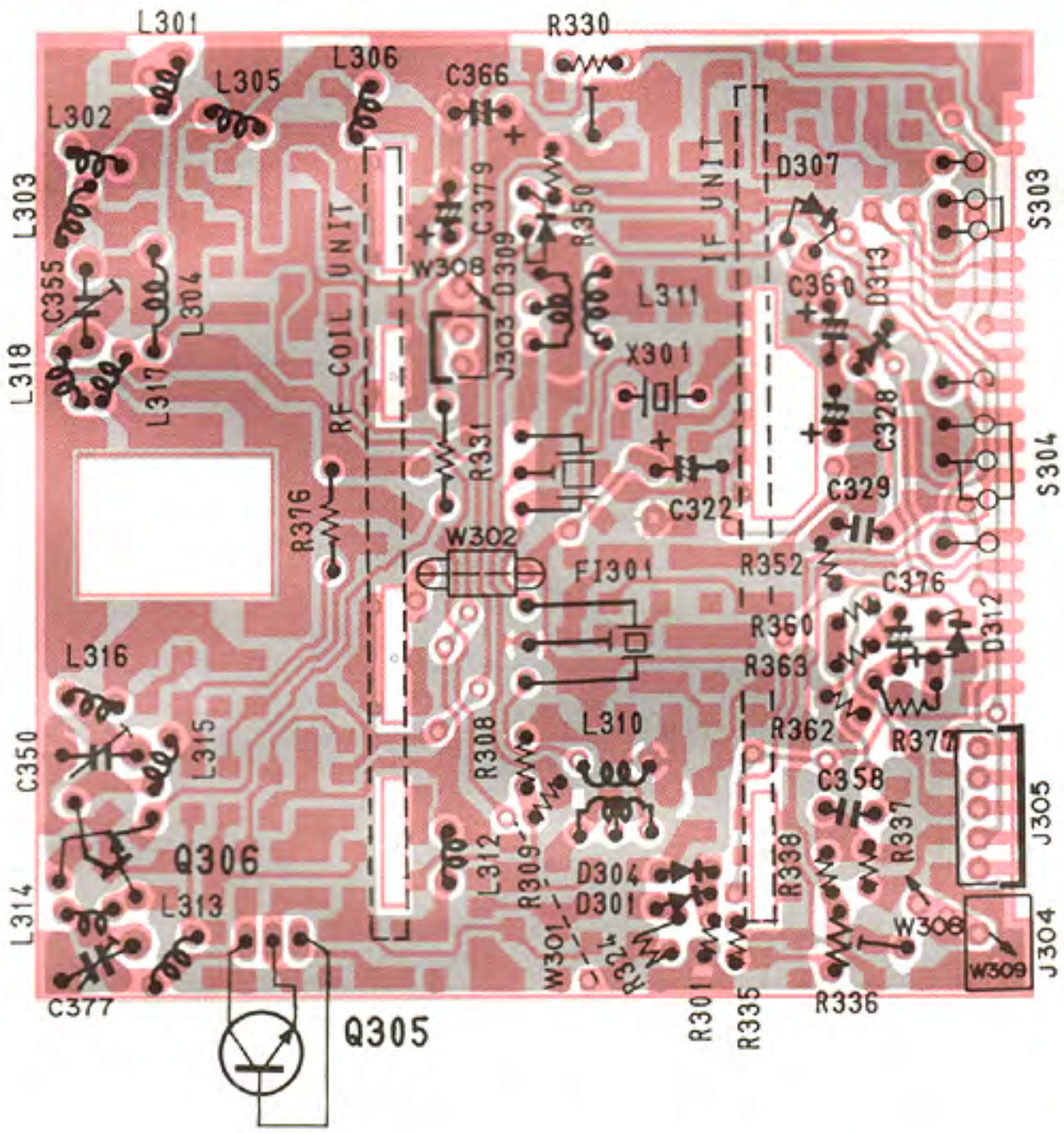

FOIL SIDE

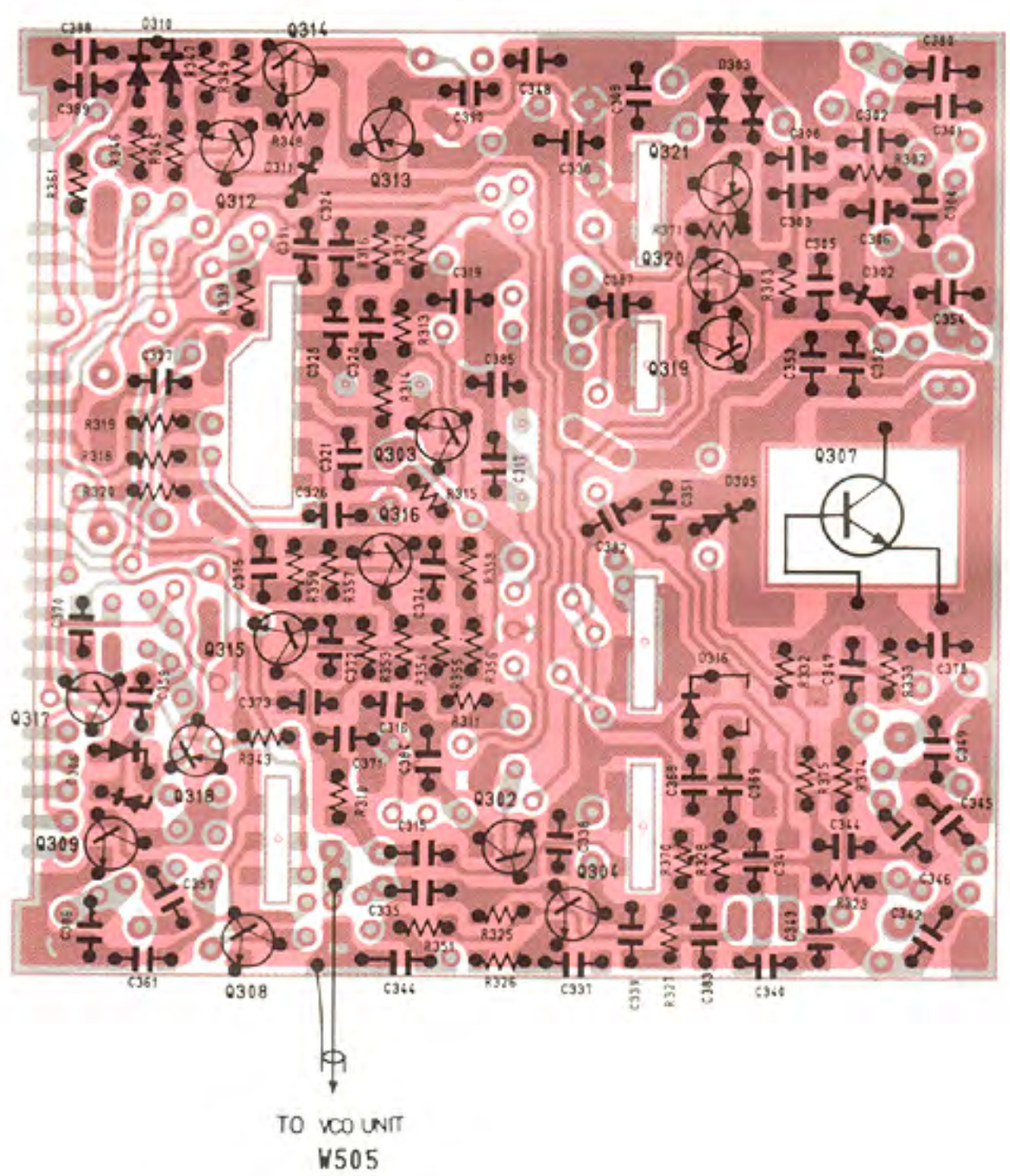

ManualsPlus.com

• IF UNIT

COMPONENTS SIDE

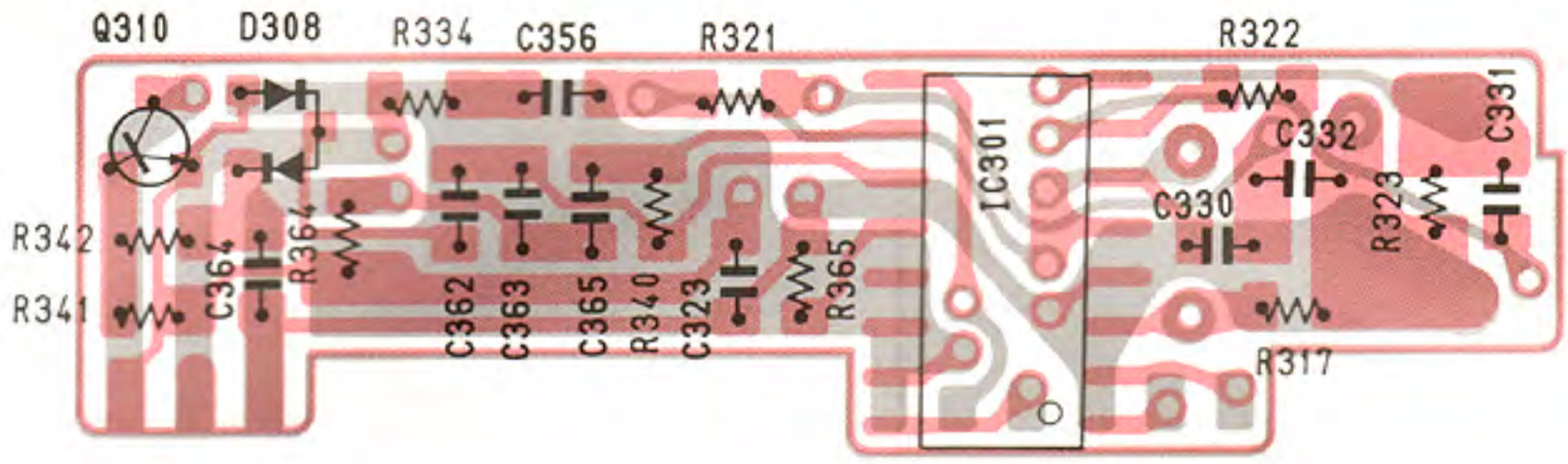

FOIL SIDE

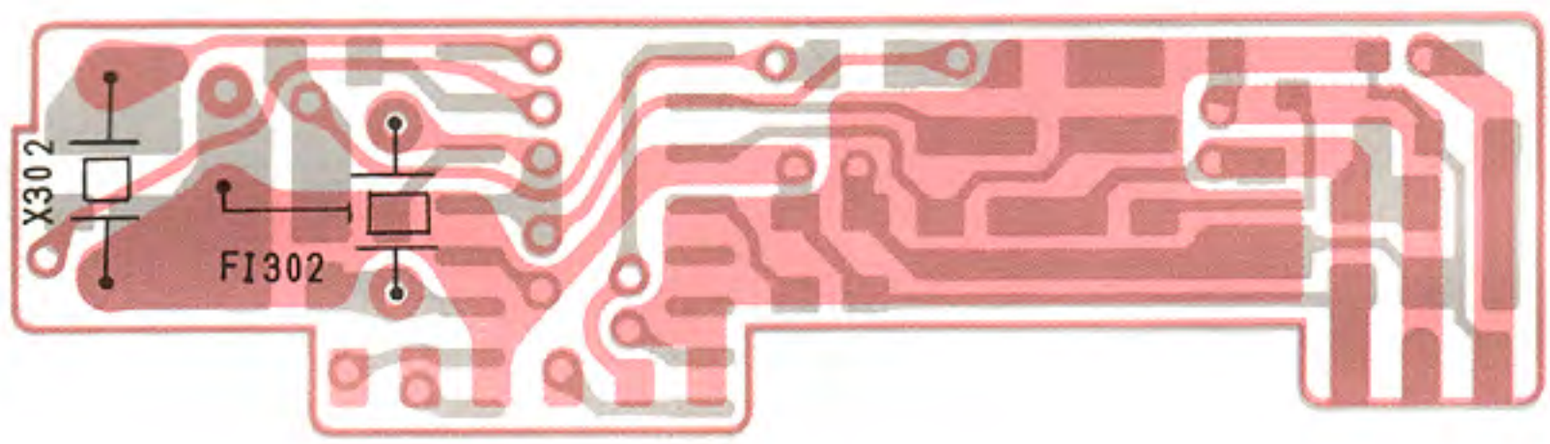

• RF COIL UNIT

COMPONENTS SIDE

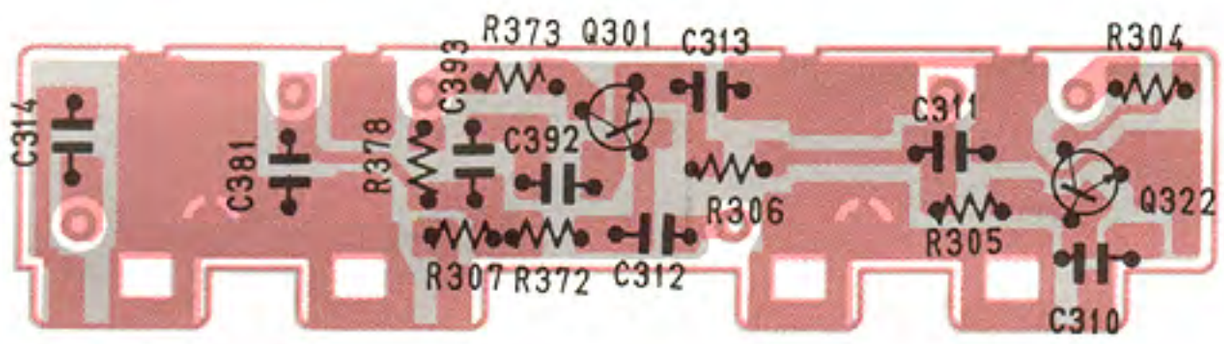

FOIL SIDE

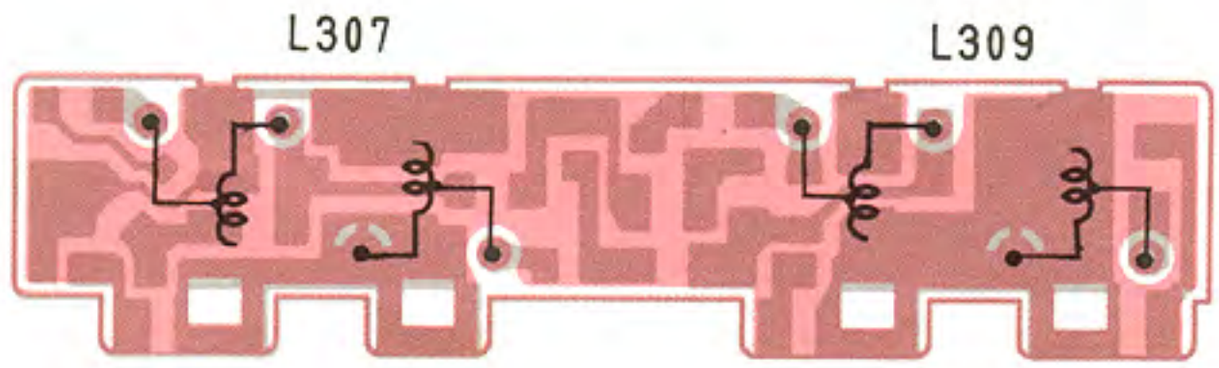

ManualsPlus.com

7-4 VCO UNIT

TRANSISTORS			
2SC3772 rank 3 Q501, Q502 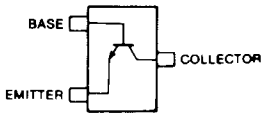 Symbol: LY3	**2SC3356** Q503, Q504 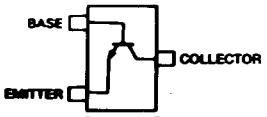 Symbol: R	**DTC124EK** Q505 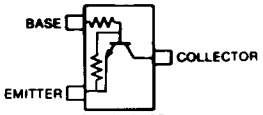 Symbol: 25	
DIODE			
MA862 D502 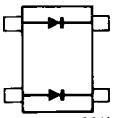 Symbol: M1I			

ManualsPlus.com

• VCO UNIT

COMPONENTS SIDE

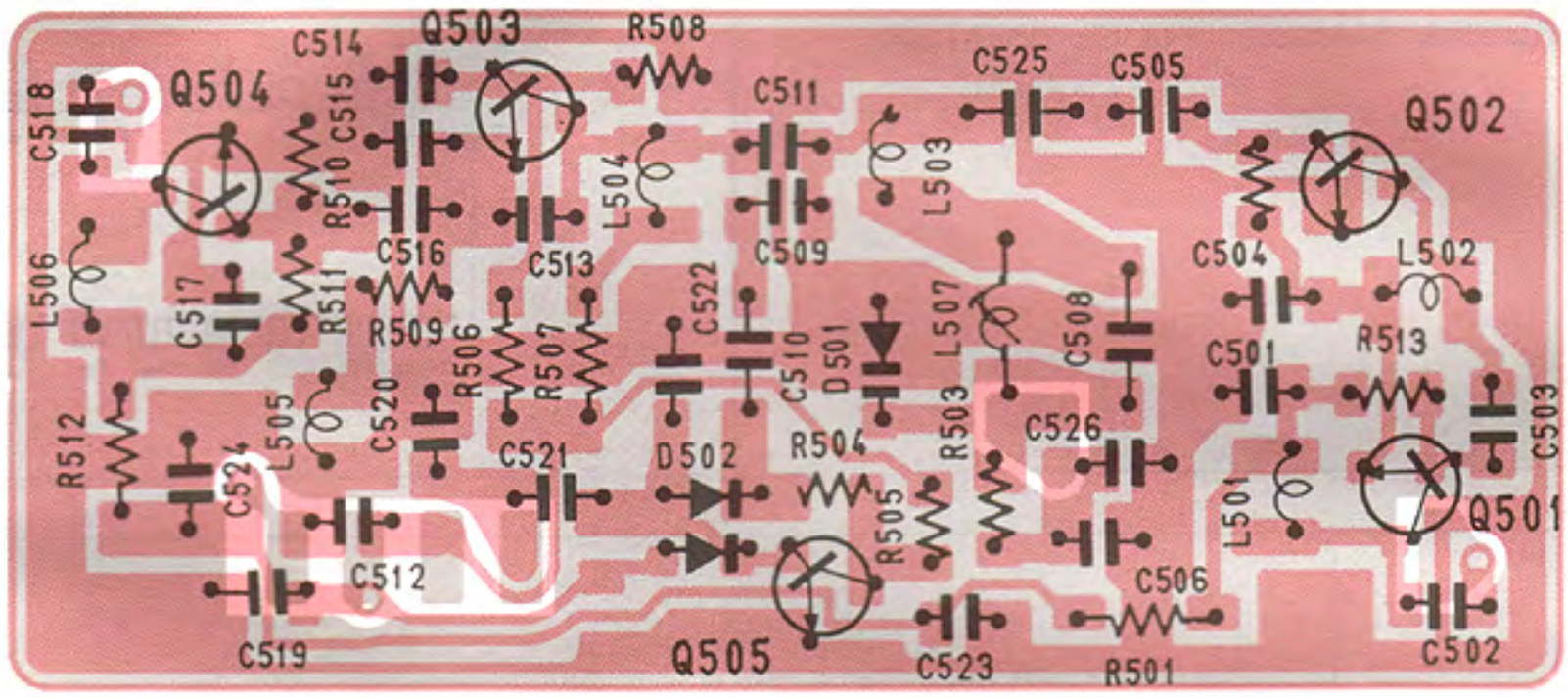

FOIL SIDE

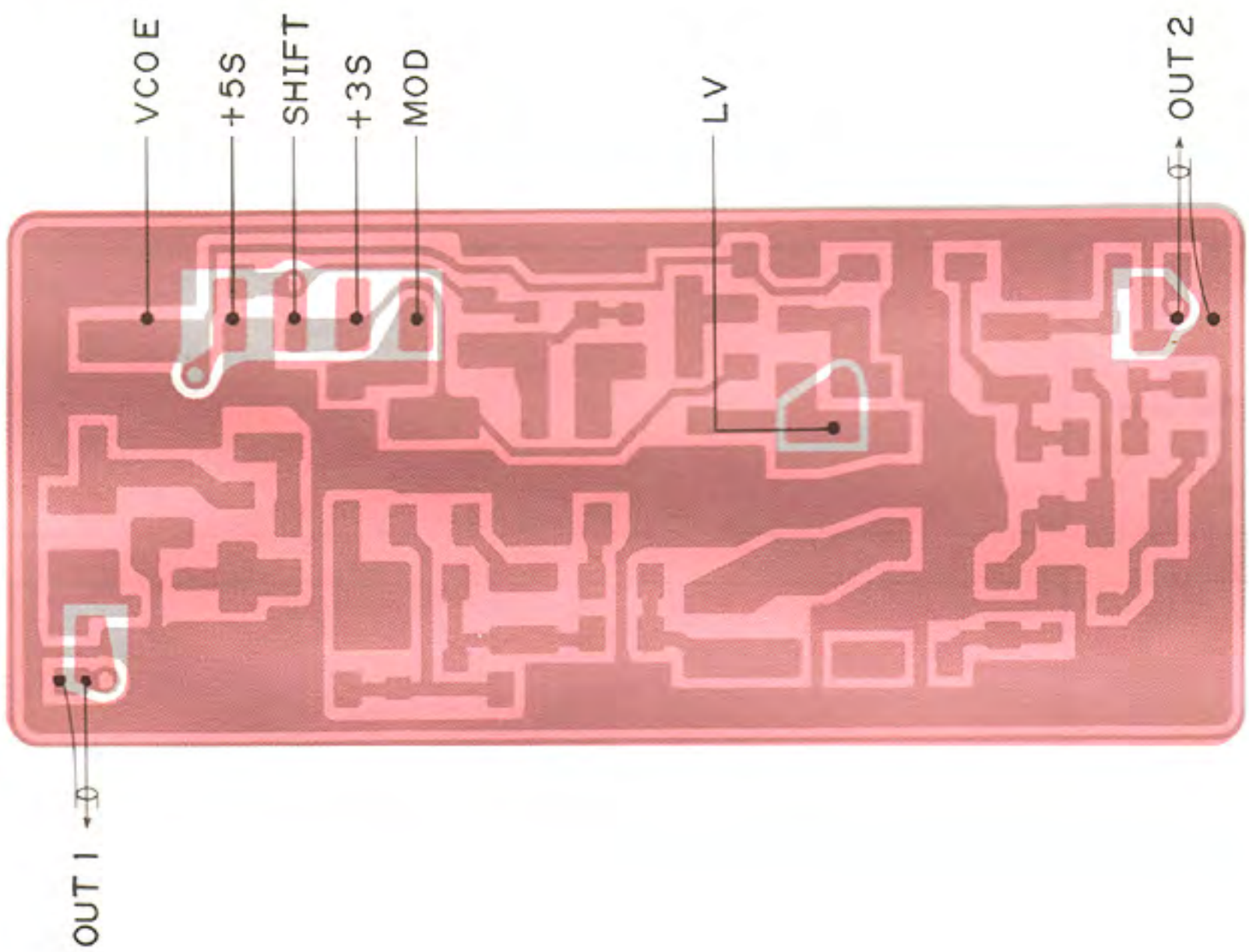

ManualsPlus.com

7-5 TONE AND TONE CALL UNITS

• TONE UNIT [IC-μ4AT (#05, #09)]

IC		
IC701	S7116A (PROGRAMMABLE TONE GENERATOR)	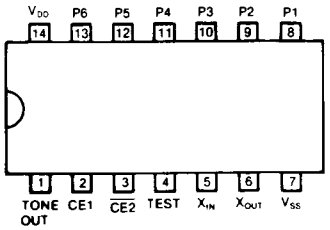

TRANSISTOR	
2SC2712 rank BL Q701 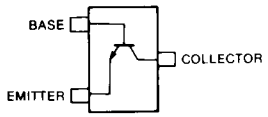 Symbol: LY	

• TONE CALL UNIT [IC-μ4E (#04)]

IC		
IC801	TC5082P (OSCILLATOR AND 12-STAGE DIVIDER)	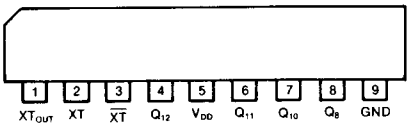

TRANSISTOR	
RN2404 Q801 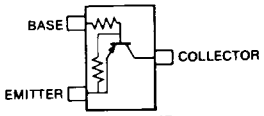 Symbol: YD	

DIODE	
1SS193 D801 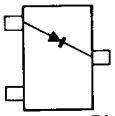 Symbol: F3	

ManualsPlus.com

• **TONE UNIT [IC-μ4AT (#05, #09)]**

COMPONENTS SIDE

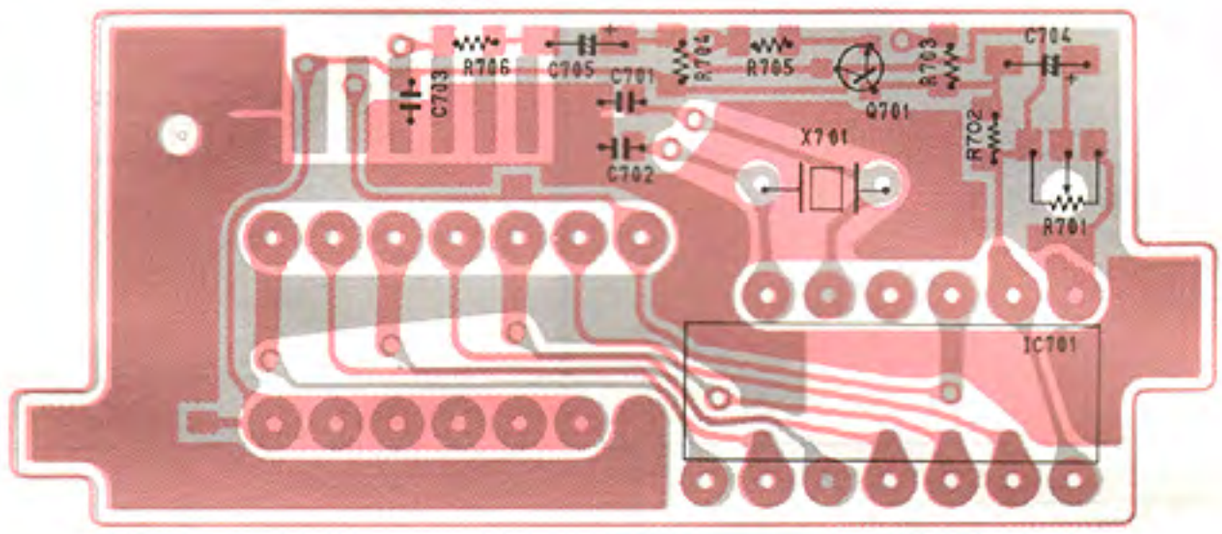

FOIL SIDE

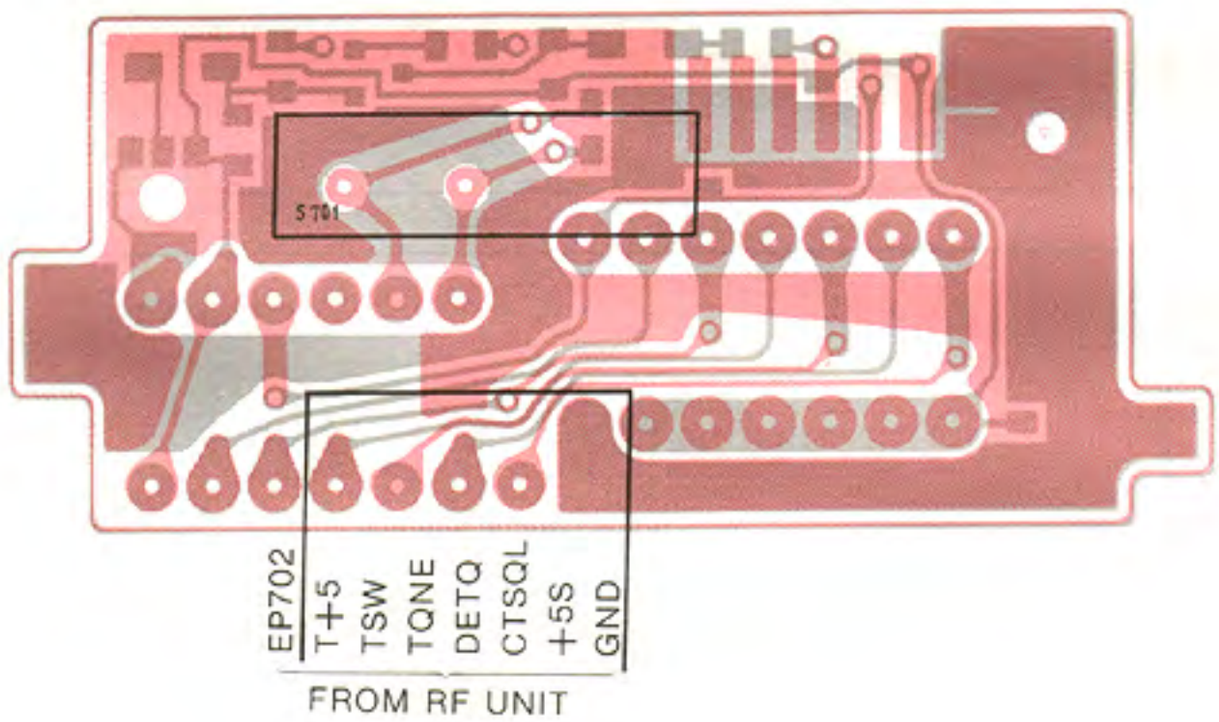

• **TONE CALL UNIT [IC-μ4E (#04)]**

COMPONENTS SIDE

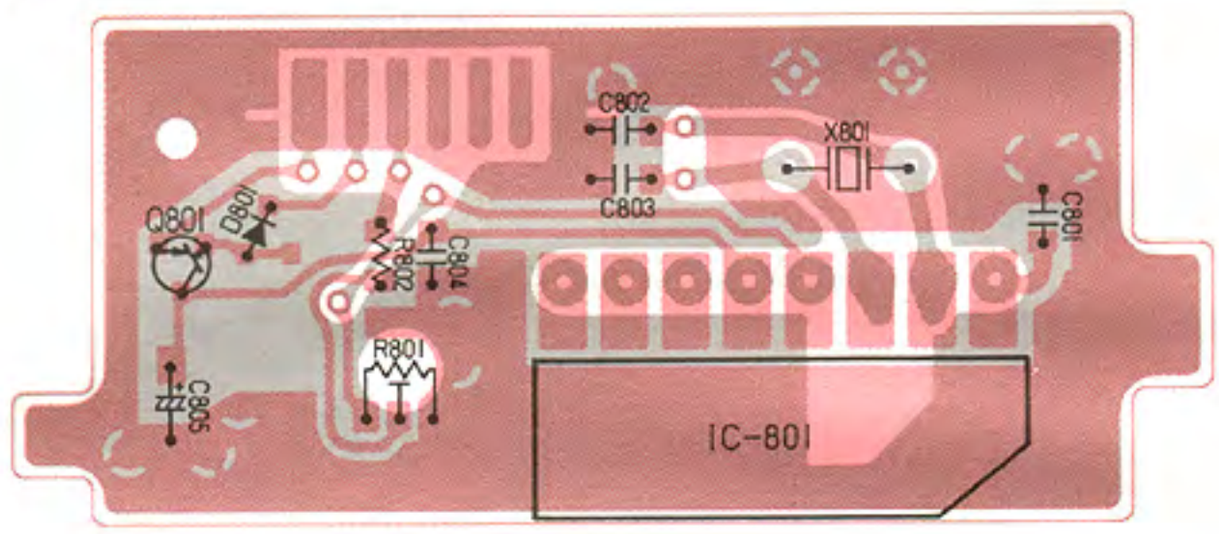

FOIL SIDE

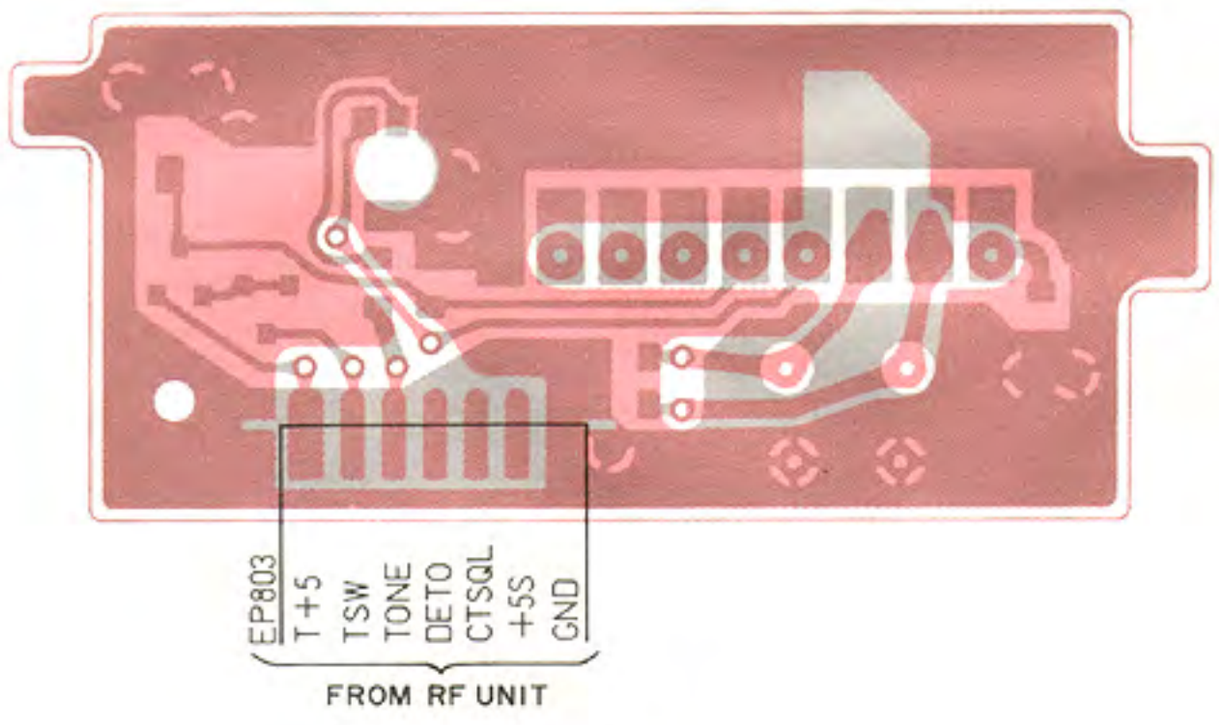

ManualsPlus.com

7-6 DTMF AND PTT UNITS

• DTMF UNIT [IC-μ4AT (#05, #09)]

IC		
IC601	**LR40872** (TONE DIALING)	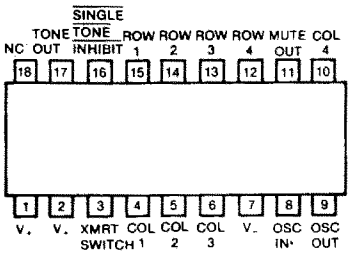
TRANSISTOR		
2SC2712 Q601 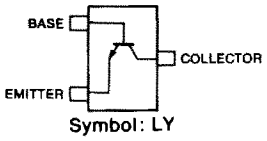 Symbol: LY		
DIODE		
1SS181 D601 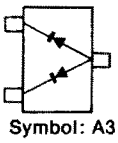 Symbol: A3		

ManualsPlus.com

• DTMF UNIT [IC-μ4AT (#05, #09)]

COMPONENTS SIDE

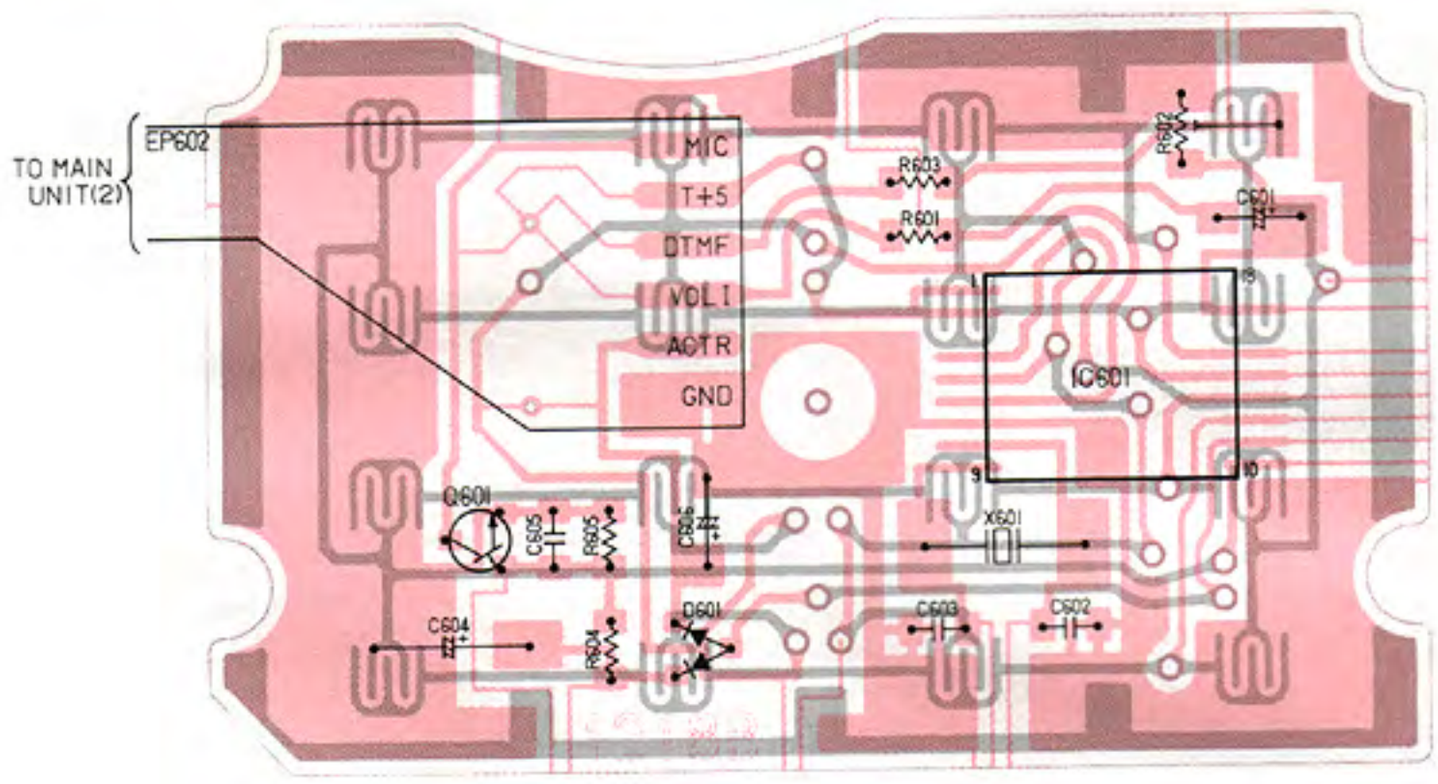

FOIL SIDE

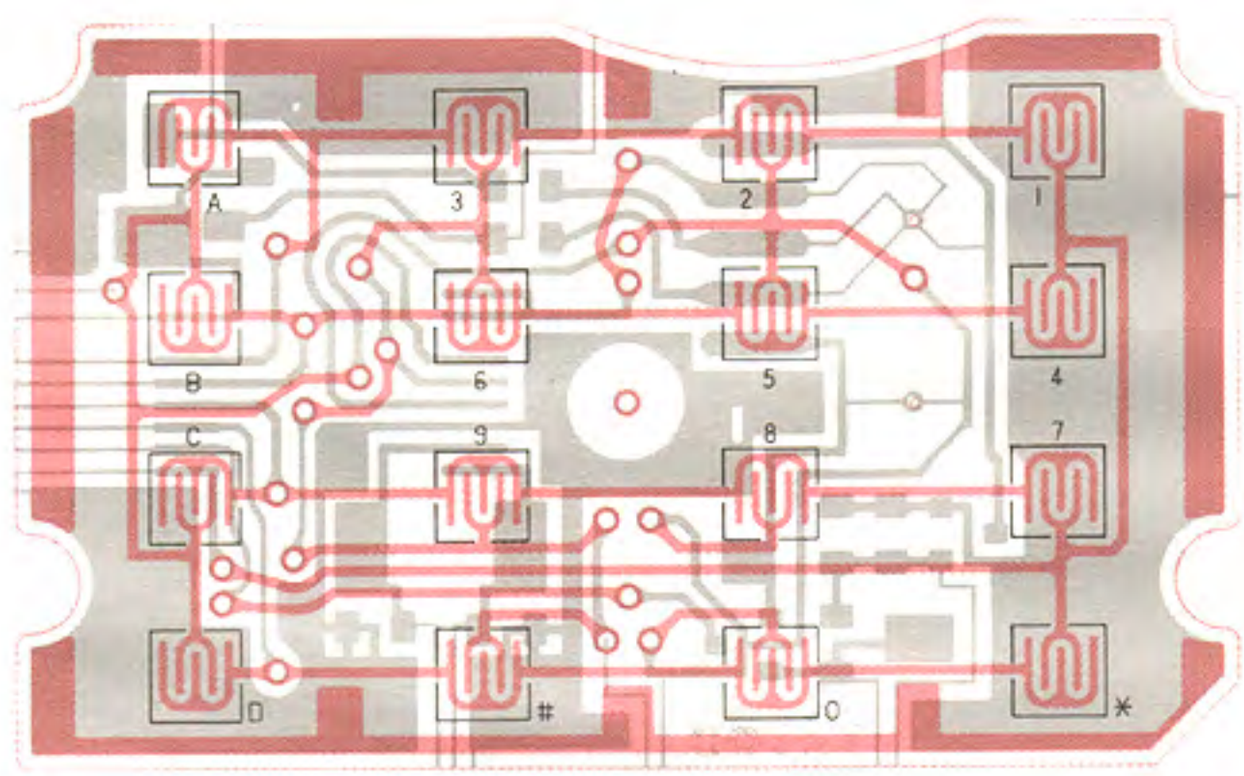

• PTT UNIT

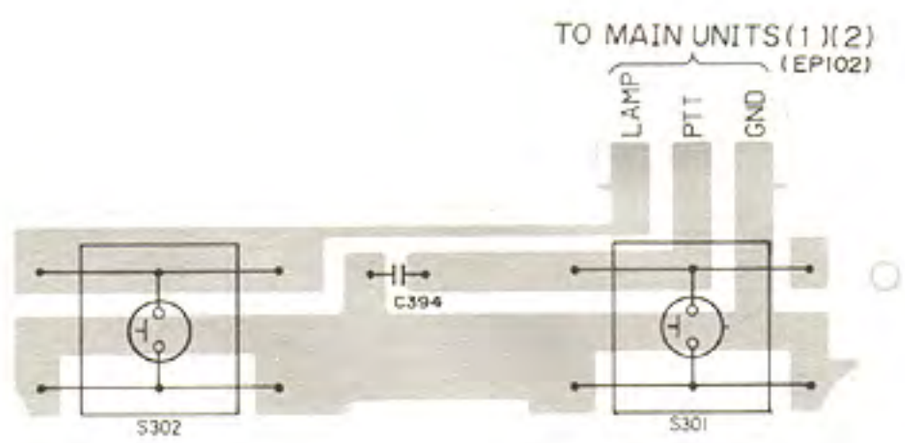

ManualsPlus.com

SECTION 8 VOLTAGE DIAGRAMS

8-1 MAIN UNIT

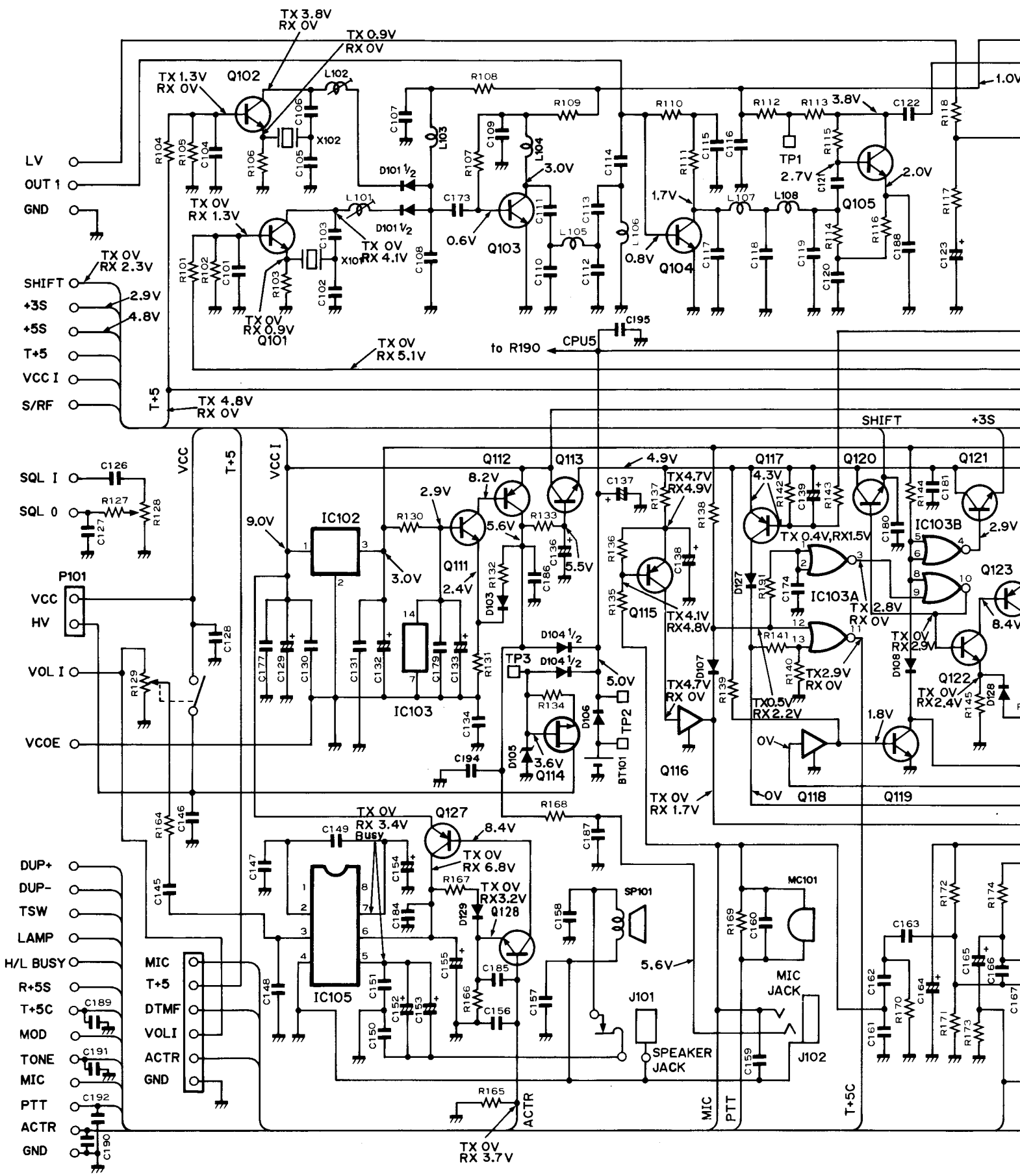

ManualsPlus.com

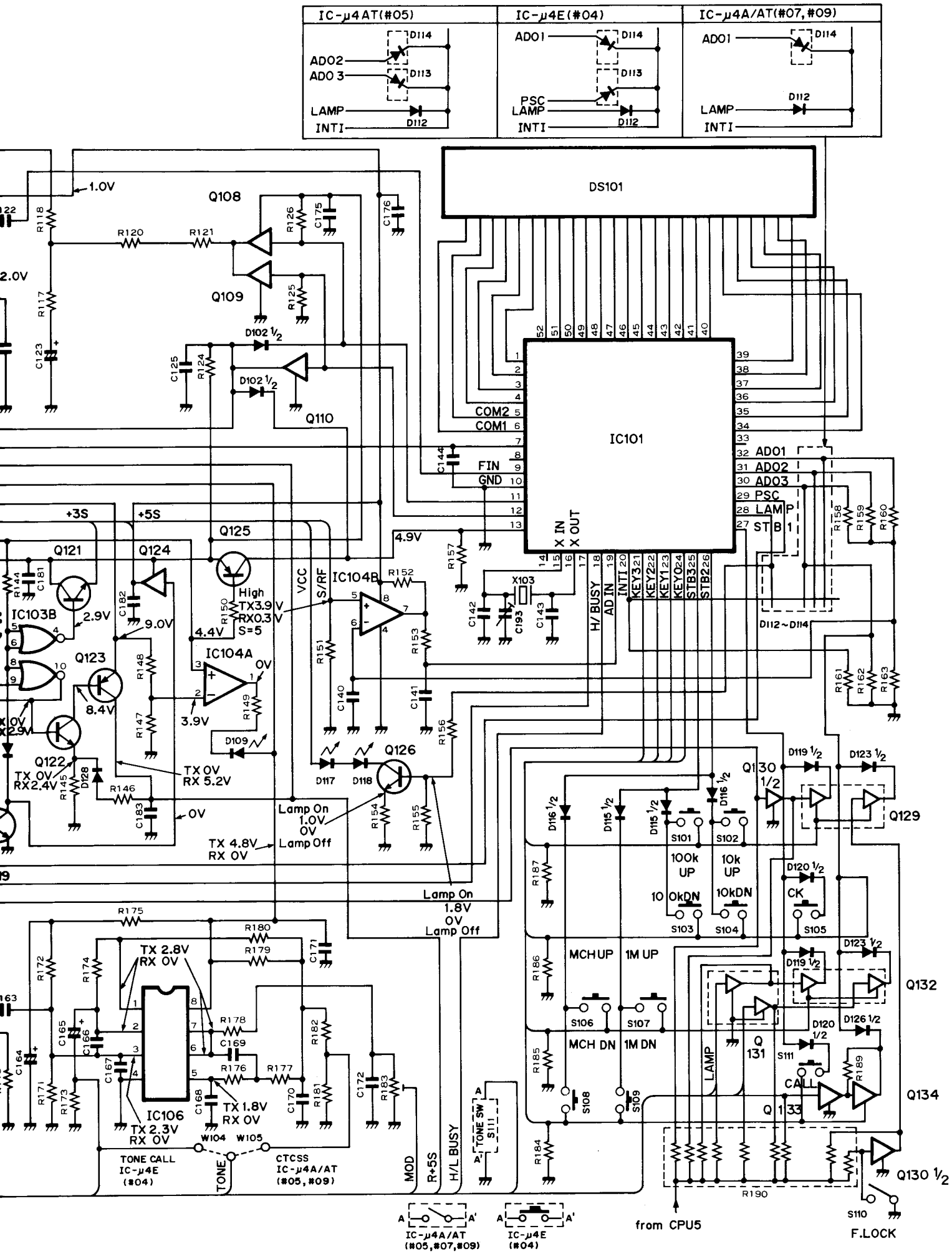

ManualsPlus.com

8-2 RF UNIT

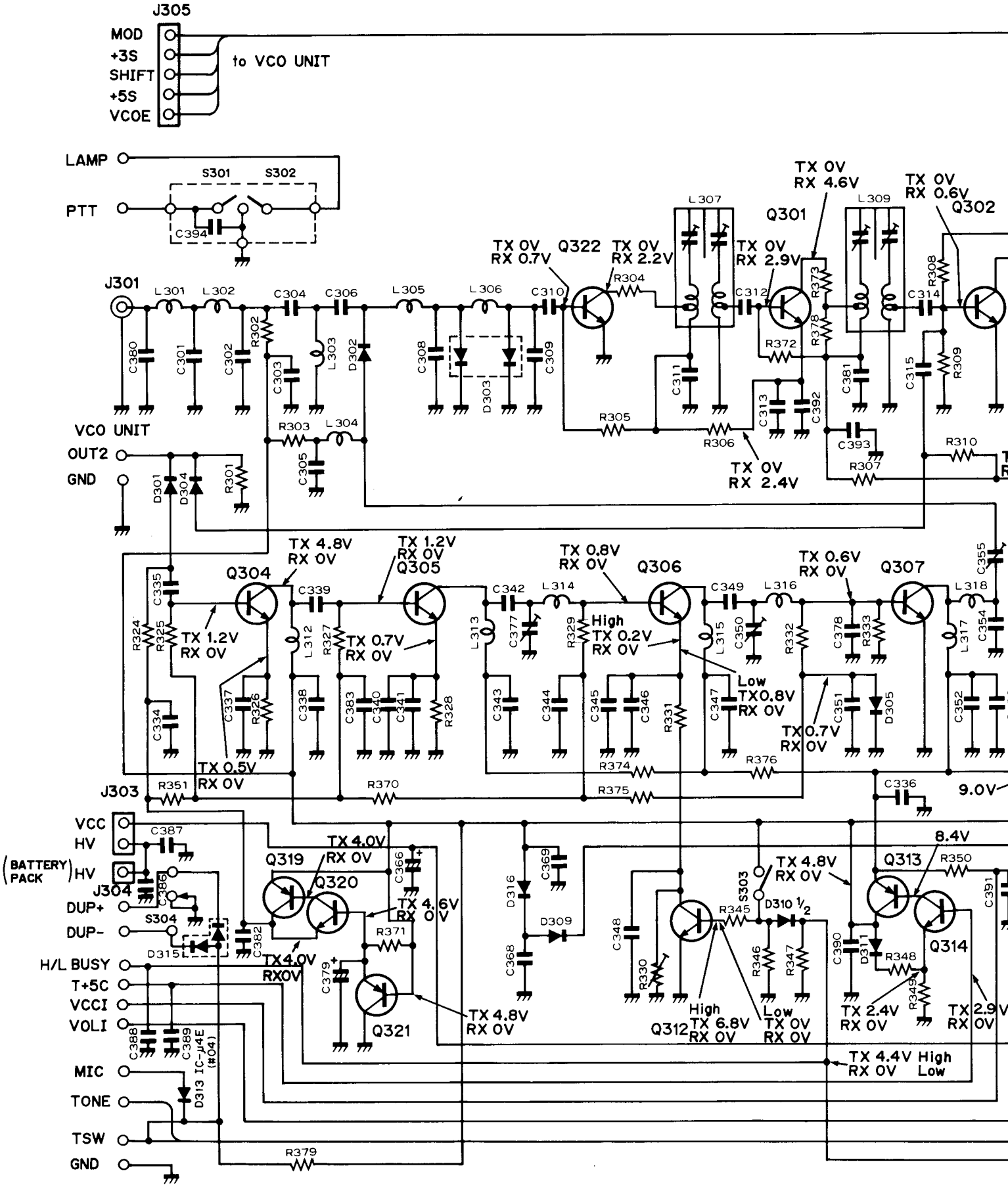

ManualsPlus.com

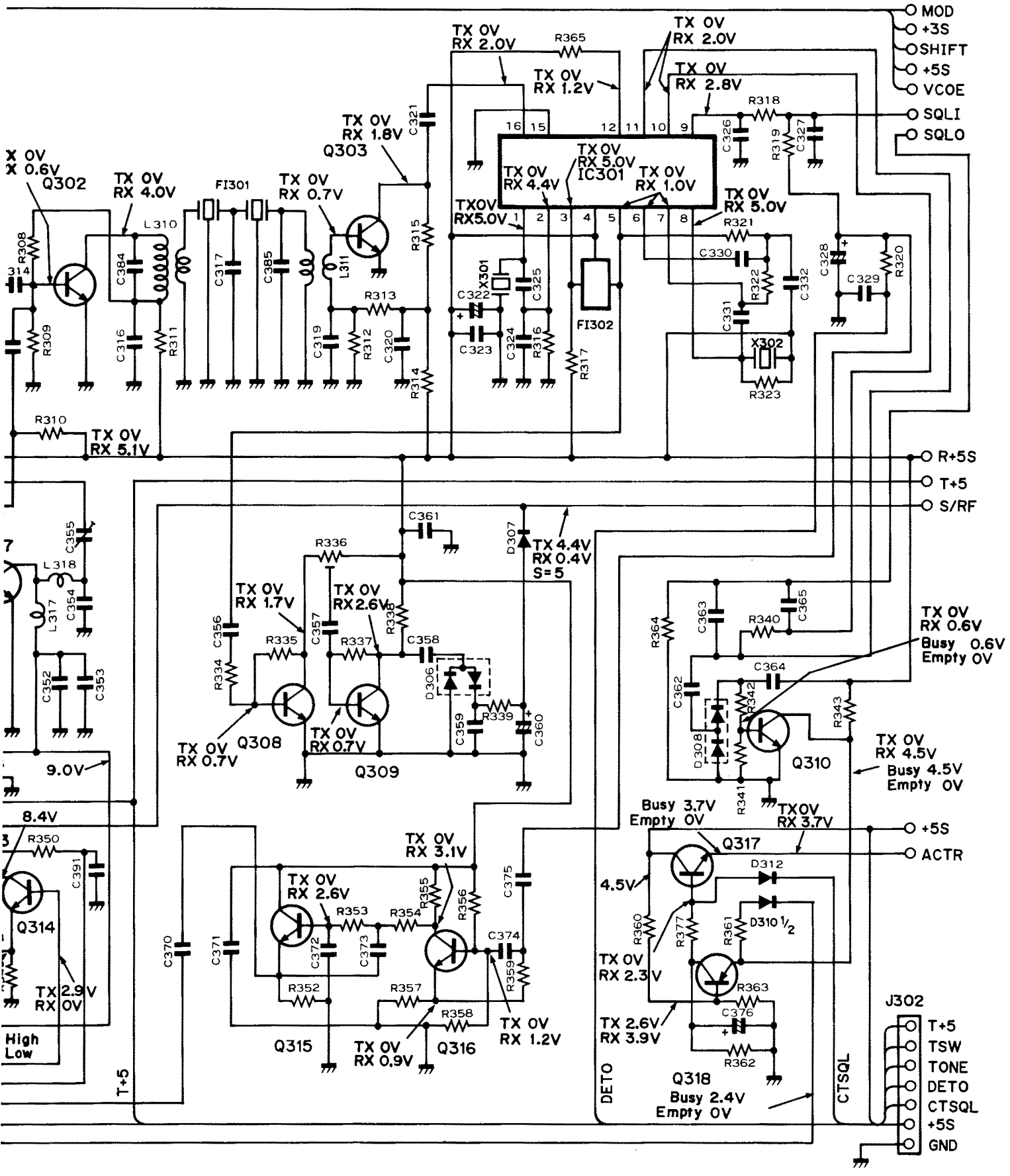

ManualsPlus.com

8-3 VCO UNIT

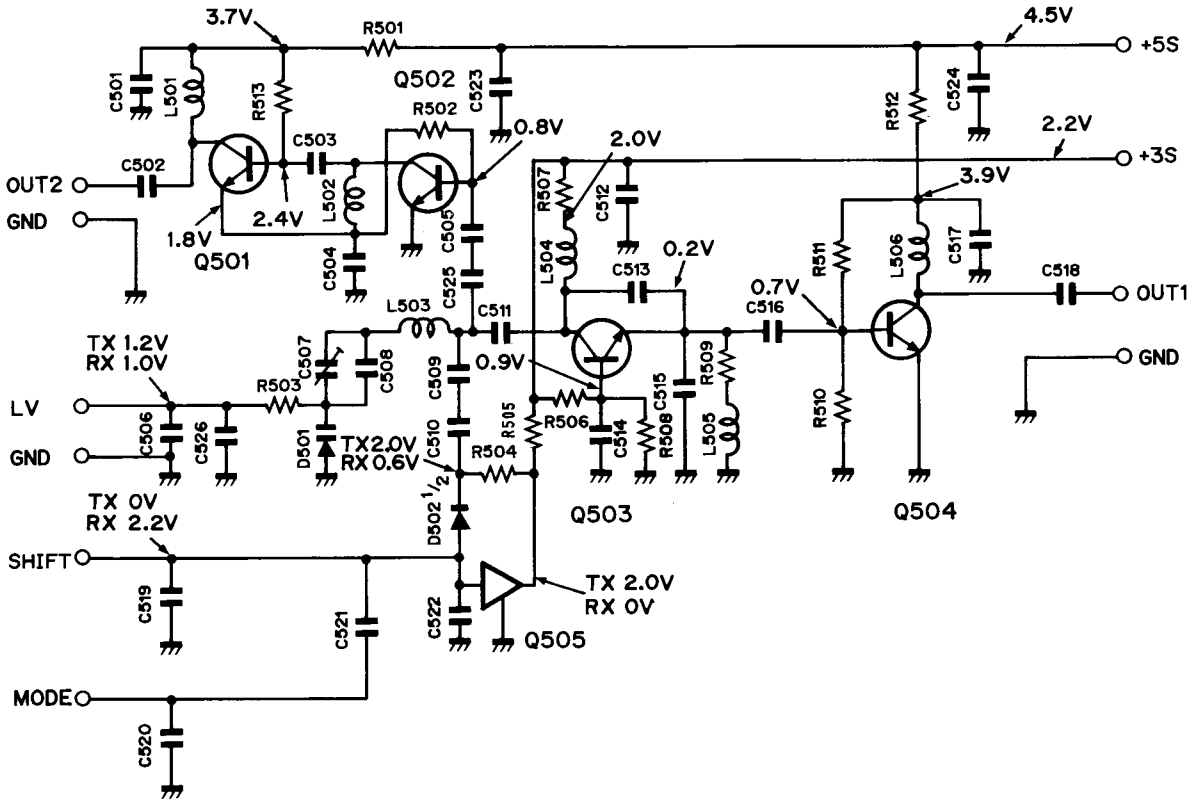

8-4 TONE CALL UNIT [IC-μ4E (#04)]

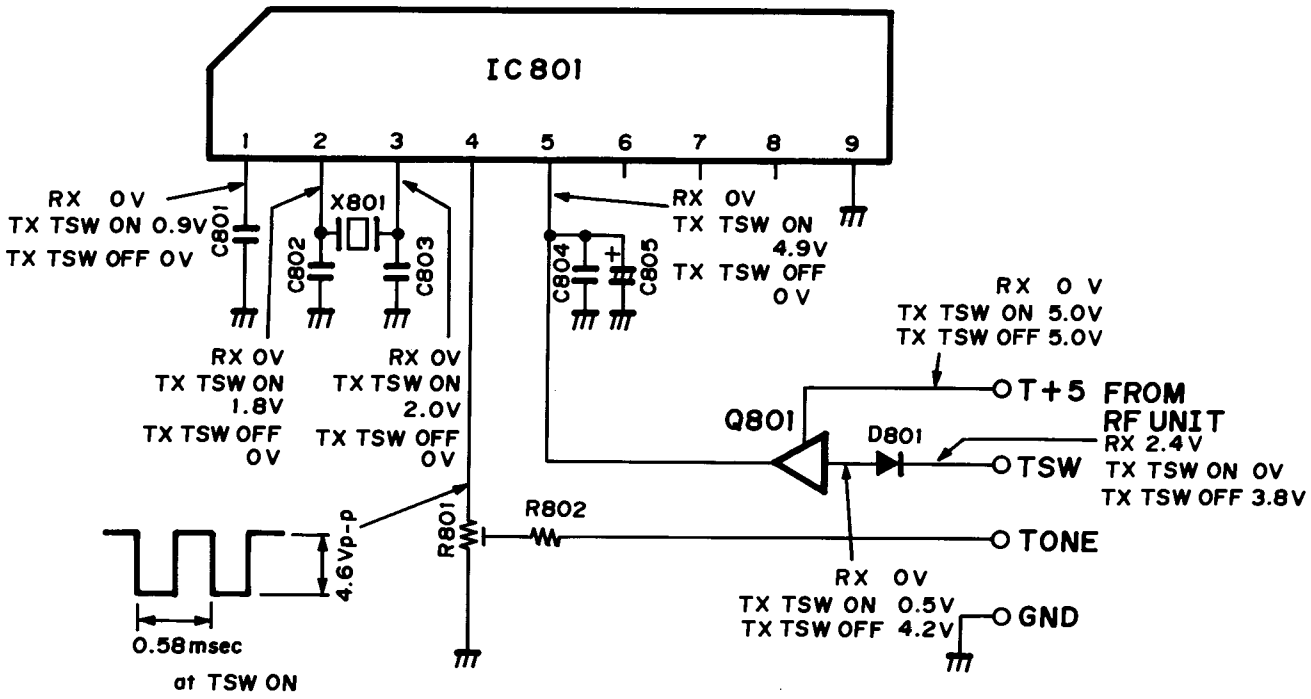

ManualsPlus.com

8-5 TONE UNIT [IC-μ4AT (#05, #09)]

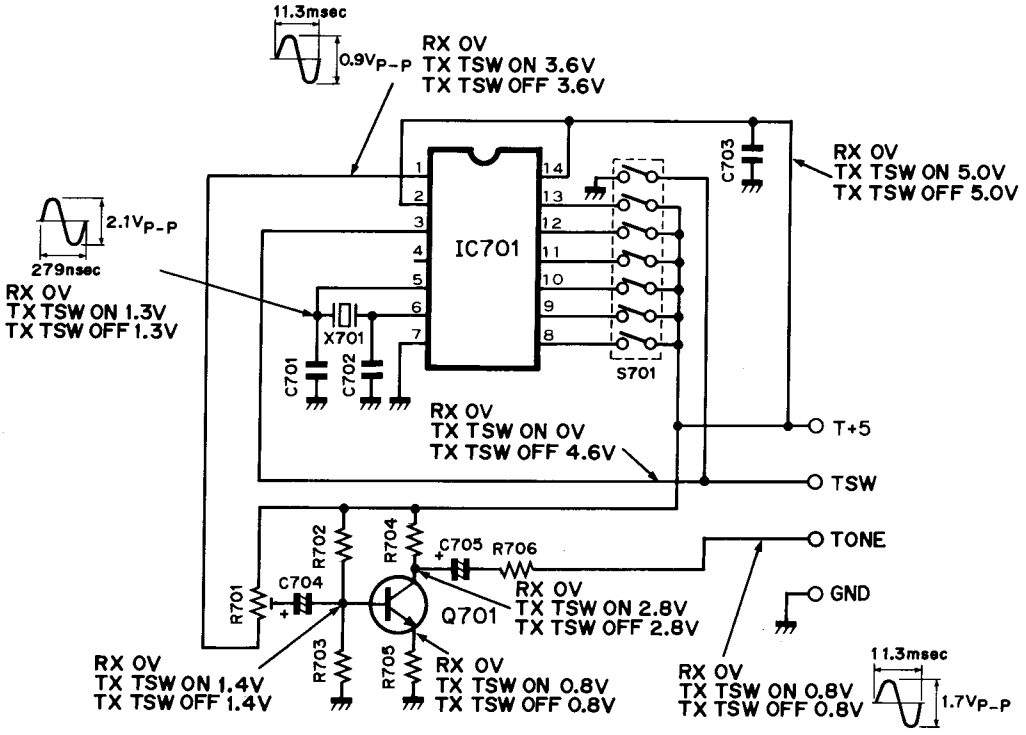

Select Frequency 88.5Hz

8-6 DTMF UNIT [IC-μ4AT (#05, #09)]

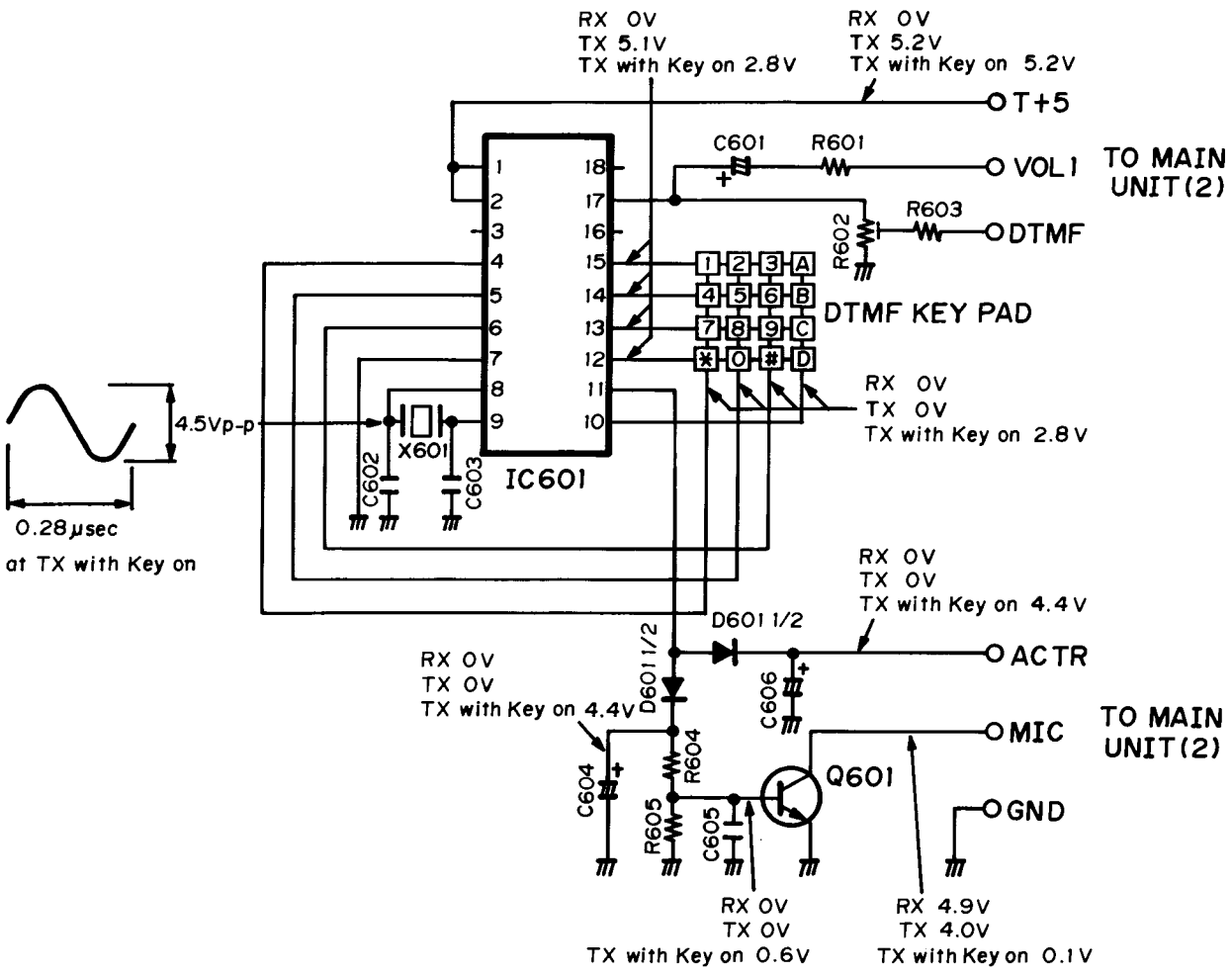

ManualsPlus.com

8-7 UT-37 OPTIONAL TONE SQUELCH UNIT

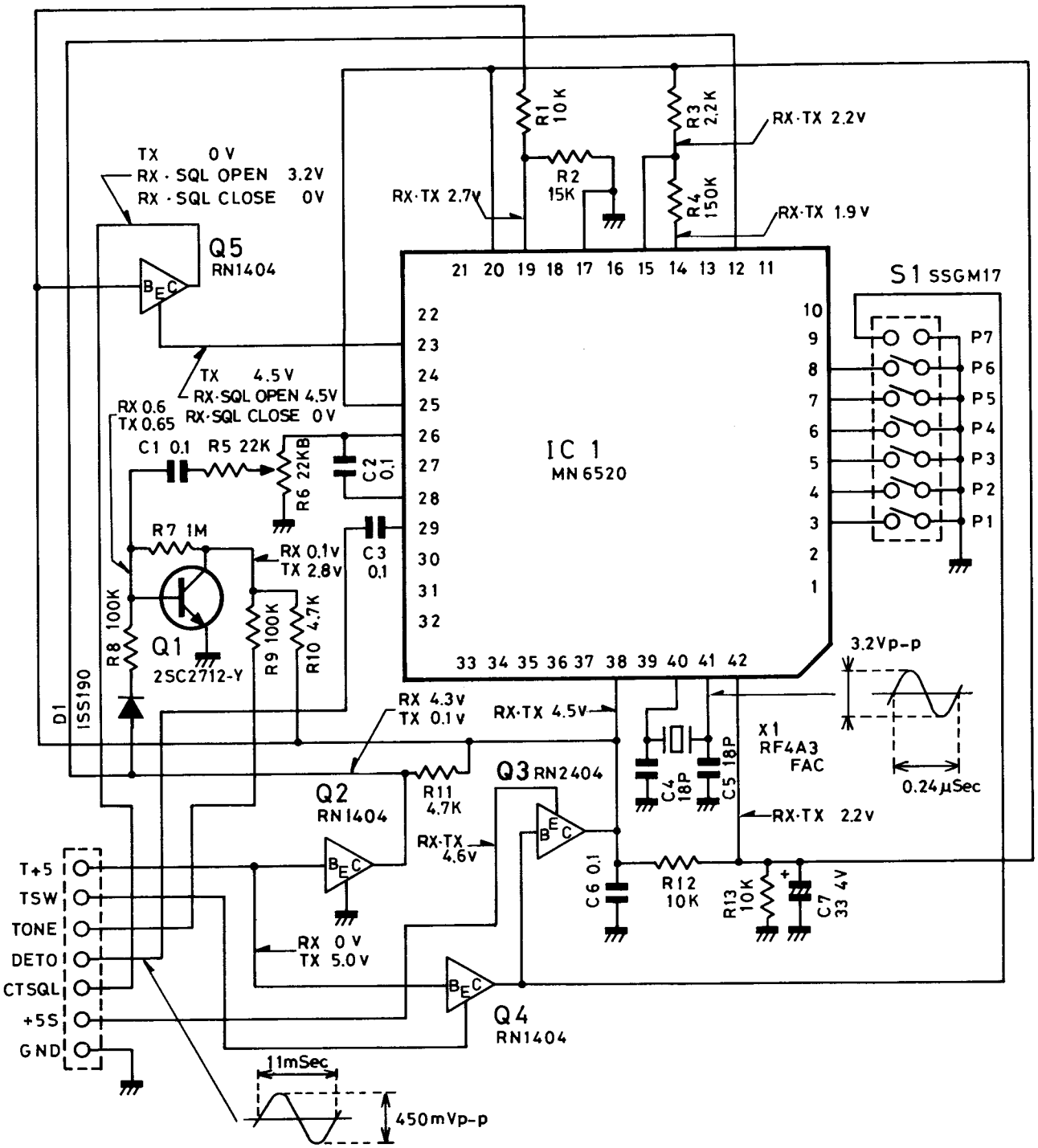

ManualsPlus.com

SECTION 9 PARTS LIST

[MAIN UNIT]

REF. NO.	DESCRIPTION	PART NO.
IC101	IC	µPD1708AG-675-00-C
IC102	IC	LVC550A
IC103	IC	LC4001BM
IC104	IC	BA6993F
IC105	IC	NJM386M
IC106	IC	BA4558F
Q101	Transistor	2SC3772 3
Q102	Transistor	2SC3772 3
Q103	Transistor	2SC3772 3
Q104	Transistor	2SC3770 3
Q105	Transistor	2SC3770 3
Q108	Transistor	2SA1341
Q109	Transistor	2SC3395
Q110	Transistor	2SC3395
Q111	Transistor	2SC4081 R
Q112	Transistor	2SA1162 GR
Q113	Transistor	2SC4081 R
Q114	FET	2SK209 O
Q115	Transistor	2SA1576 R
Q116	Transistor	DTC144EU
Q117	Transistor	2SA1576 R
Q118	Transistor	DTC144EU
Q119	Transistor	2SC4081 R
Q120	Transistor	2SC4081 R
Q121	Transistor	2SC4081 R
Q122	Transistor	2SC4081 R
Q123	Transistor	2SA1576 R
Q124	Transistor	DTA143ZU
Q125	Transistor	2SA1576 R
Q126	Transistor	2SC2712 BL
Q127	Transistor	2SB798 DK
Q128	Transistor	2SC4081 R
Q129	Transistor	FMG4
Q130	Transistor	FMG4
Q131	Transistor	FMG4
Q132	Transistor	FMG4
Q133	Transistor	2SC3395
Q134	Transistor	2SC4081 R
D101	Diode	MA862
D102	Diode	1SS181
D103	Diode	DAP202U
D104	Diode	DAN202U
D105	Zener	RD5.1M B3
D106	Diode	DAN202U
D107	Diode	1SS190
D108	Diode	DAN202U
D109	LED	SLB-22VR
D112	Diode	DAN202U
D113	Diode (#05)	1SS193
D113	Diode (#04)	1SS196
D114	Diode (#04, #07, #09)	1SS193
D114	Diode (#05)	1SS196
D115	Diode	1SS181
D116	Diode	1SS181
D117	LED	SLM-13MW
D118	LED	SLM-13MW
D119	Diode	DAP202U
D120	Diode	1SS187
D123	Diode	DAP202U
D126	Diode	DAP202U
D127	Diode	DAN202U

[MAIN UNIT]

REF. NO.	DESCRIPTION	PART NO.
D128	Diode	DAP202U
D129	Diode	DAN202U
X101	Crystal (#04, #07, #09)	CR-220
	Crystal (#05)	CR-222
X102	Crystal (#04, #07, #09)	CR-221
	Crystal (#05)	CR-223
X103	Crystal	RF4A3 FAD 4.5MHz
L101	Coil	LS-318
L102	Coil	LS-317
L103	Coil	NL322522-R56M
L104	Coil	NL322522-039M
L105	Coil	NL322522-018M
L106	Coil	NL322522-022M
L107	Coil	NL322522-R39M
L108	Coil	NL322522-R39M
R101	Chip	5.6kΩ MCR10
R102	Chip	3.3kΩ MCR10
R103	Chip	680Ω MCR10
R104	Chip	5.6kΩ MCR10
R105	Chip	3.3kΩ MCR10
R106	Chip	680Ω MCR10
R107	Chip	100kΩ MCR10
R108	Chip	68Ω MCR10
R109	Chip	1kΩ MCR10
R110	Chip	47Ω MCR10
R111	Chip	47kΩ MCR10
R112	Chip	150Ω MCR10
R113	Chip	330Ω MCR10
R114	Chip	100Ω MCR10
R115	Chip	47kΩ MCR10
R116	Chip	47Ω MCR10
R117	Chip	1.8kΩ MCR10
R118	Chip	8.2kΩ MCR10
R120	Chip	10kΩ MCR10
R121	Chip	470Ω MCR10
R124	Chip	100kΩ MCR10
R125	Chip	10kΩ MCR10
R126	Chip	10kΩ MCR10
R127	Chip	10kΩ MCR10
R128	Variable Resistor	10kΩ V105-B10K
R129	Variable Resistor	10kΩ V108-S-B10K
R130	Chip	4.7kΩ MCR10
R131	Chip	3.3kΩ MCR10
R132	Chip	3.9kΩ MCR10
R133	Chip	2.2kΩ MCR10
R134	Chip	6.8kΩ MCR10
R135	Chip	2.2kΩ MCR10
R136	Chip	10kΩ MCR10
R137	Chip	470Ω MCR10
R138	Chip	10kΩ MCR10
R139	Chip	100kΩ MCR10
R140	Chip	330kΩ MCR10
R141	Chip	220kΩ MCR10
R142	Chip	150kΩ MCR10
R143	Chip	1MΩ MCR10
R144	Chip	220kΩ MCR10
R145	Chip	4.7kΩ MCR10
R146	Chip	4.7kΩ MCR10
R147	Chip	330kΩ MCR10
R148	Chip	270kΩ MCR10

ManualsPlus.com

[MAIN UNIT]

REF. NO.	DESCRIPTION	PART NO.	
R149	Chip	330Ω	MCR10
R150	Chip	100kΩ	MCR10
R151	Chip	470kΩ	MCR10
R152	Chip	47kΩ	MCR10
R153	Chip	4.7kΩ	MCR10
R154	Chip	47Ω	MCR10
R155	Chip	3.3kΩ	MCR10
R156	Chip	5.6kΩ	MCR10
R157	Chip	22kΩ	MCR10
R158	Chip	1MΩ	MCR10
R159	Chip	470kΩ	MCR10
R160	Chip	220kΩ	MCR10
R161	Chip	100kΩ	MCR10
R162	Chip	47kΩ	MCR10
R163	Chip	33kΩ	MCR10
R164	Chip	10kΩ	MCR10
R165	Chip	47kΩ	MCR10
R166	Chip	680Ω	MCR10
R167	Chip	680Ω	MCR10
R168	Chip	1.2kΩ	MCR10
R169	Chip	33kΩ	MCR10
R170	Chip	47kΩ	MCR10
R171	Chip	270kΩ	MCR10
R172	Chip	180kΩ	MCR10
R173	Chip (#04, #07, #09)	120Ω	MCR10
R173	Chip (#5)	270Ω	MCR10
R174	Chip	180kΩ	MCR10
R175	Chip	1kΩ	MCR10
R176	Chip	82kΩ	MCR10
R177	Chip	82kΩ	MCR10
R178	Chip	100kΩ	MCR10
R179	Chip	270kΩ	MCR10
R180	Chip	180kΩ	MCR10
R181	Chip	100kΩ	MCR10
R182	Chip	270kΩ	MCR10
R183	Trimmer	47kΩB	RH04A3AS4J
R184	Chip	47kΩ	MCR10
R185	Chip	47kΩ	MCR10
R186	Chip	47kΩ	MCR10
R187	Chip	47kΩ	MCR10
R189	Chip	220kΩ	MCR10
R190	Array	MA5025 F 09 224 J	
R191	Chip	220kΩ	MCR10
C101	Monolithic	470pF	GRM40
C102	Monolithic (#04, #07, #09)	68pF	GRM40 CH
C102	Monolithic (#05)	56pF	GRM40 CH
C103	Monolithic	27pF	GRM40 CH
C104	Monolithic	470pF	GRM40
C105	Monolithic (#04, #07, #09)	68pF	GRM40 CH
C105	Monolithic (#05)	56pF	GRM40 CH
C106	Monolithic	22pF	GRM40 CH
C107	Monolithic	470pF	GRM40
C108	Monolithic	100pF	GRM40
C109	Monolithic	470pF	GRM40
C110	Monolithic	10pF	GRM40
C111	Monolithic	1pF	GRM40
C112	Monolithic	10pF	GRM40
C113	Monolithic	3pF	GRM40
C114	Monolithic	3pF	GRM40
C115	Monolithic	0.001μF	GRM40
C116	Monolithic	0.01μF	GRM40 F
C117	Monolithic	22pF	GRM40
C118	Monolithic	82pF	GRM40
C119	Monolithic	12pF	GRM40
C120	Monolithic	0.001μF	GRM40
C121	Monolithic	0.001μF	GRM40
C122	Monolithic	0.001μF	GRM40

[MAIN UNIT]

REF. NO.	DESCRIPTION	PART NO.	
C123	Tantalum	TESVB1A335M12L	
C125	Monolithic	0.1μF	GRM40 F
C126	Monolithic	0.001μF	GRM40
C127	Monolithic	470pF	GRM40
C128	Monolithic	470pF	GRM40
C129	Tantalum	TESVD21C226M12L	
C130	Monolithic	470pF	GRM40
C131	Monolithic	470pF	GRM40
C132	Tantalum	TESVB20G106M8L	
C133	Tantalum	TESVB20G106M8L	
C134	Monolithic	470pF	GRM40
C136	Tantalum	TESVB20J685M8L	
C137	Tantalum	DSB0J336M1S	
C138	Tantalum	TESVB20J685M8L	
C139	Tantalum	TESVA1A225M1-8L	
C140	Monolithic	0.001μF	GRM40
C141	Monolithic	0.001μF	GRM40
C142	Monolithic	5pF	GRM40
C143	Monolithic	15pF	GRM40
C144	Monolithic	0.001μF	GRM40
C145	Monolithic	GRM42-6 B 153K 50PT	
C146	Monolithic	470pF	GRM40
C147	Monolithic	470pF	GRM40
C148	Monolithic	470pF	GRM40
C149	Monolithic	0.01μF	GRM40 F
C150	Monolithic	470pF	GRM40
C151	Monolithic	470pF	GRM40
C152	Tantalum	TESVD20J476M12L	
C153	Tantalum	TESVD20J476M12L	
C154	Tantalum	TESVA1C105M1-8L	
C155	Tantalum	TESVD21A336M12L	
C156	Monolithic	470pF	GRM40
C157	Monolithic	0.001μF	GRM40
C158	Monolithic	470pF	GRM40
C159	Monolithic	470pF	GRM40
C160	Monolithic	470pF	GRM40
C161	Monolithic	0.001μF	GRM40
C162	Monolithic	GRM40 B 103K 25PT	
C163	Monolithic	0.0047μF	GRM40
C164	Tantalum	TESVB20J685M8L	
C165	Tantalum (#04, #07, #09)	TESVA1V224K1-8L	
C165	Tantalum (#05)	TESVA1V104K1-8L	
C166	Monolithic	470pF	GRM40
C167	Monolithic	470pF	GRM40
C168	Monolithic	120pF	GRM40
C169	Monolithic	GRM42-6 SL 222J 50PT	
C170	Monolithic	GRM40 SL 102J 50PT	
C171	Monolithic	0.1μF	GRM40 F
C172	Monolithic	GRM42-6 SL 222J 50PT	
C173	Monolithic	18pF	GRM40
C174	Monolithic	0.001μF	GRM40
C175	Monolithic	470pF	GRM40
C176	Monolithic	470pF	GRM40
C177	Monolithic	470pF	GRM40
C179	Monolithic	470pF	GRM40
C180	Monolithic	470pF	GRM40
C181	Monolithic	470pF	GRM40
C182	Monolithic	470pF	GRM40
C183	Monolithic	470pF	GRM40
C184	Monolithic	470pF	GRM40
C185	Monolithic	470pF	GRM40
C186	Monolithic	470pF	GRM40
C187	Monolithic	470pF	GRM40
C188	Monolithic	470pF	GRM40
C189	Ceramic	0.001μF	50V
C190	Ceramic	0.001μF	50V
C191	Ceramic	0.001μF	50V
C192	Ceramic	0.001μF	50V
C193	Trimmer	10pF	ECRKN010C11
C194	Monolithic	470pF	GRM40
C195	Monolithic	470pF	GRM40

ManualsPlus.com

[MAIN UNIT]

REF. NO.	DESCRIPTION	PART NO.
J101	Connector	HSJ0836-01-010
J102	Connector	HSJ1102-01-040
P101	Connector	TZL-P02H-A1
DS101	LCD	LP241-E
MC101	Microphone	EM-78B3
S101	Switch	SKHLAD
S102	Switch	SKHLAD
S103	Switch	SKHLAD
S104	Switch	SKHLAD
S105	Switch	SKHLAD
S106	Switch	SKHLAD
S107	Switch	SKHLAD
S108	Switch	SKHLAD
S109	Switch	SKHLAD
S110	Switch	SSSJ31 (B)
S111	Switch (#05, #07, #09)	SSSS31
S111	Switch (#04)	SKHLAD
SP101	Speaker	Si36D04
BT101	Lithium Battery	CR1220-1VF
EP101	F.P.C. Board	B-1370B
EP102	F.P.C. Board	B-1212D
W102	Jumper (#04, #05, #07, #09)	MCR10-JPW
W103	Jumper (#04, #05, #07, #09)	MCR10-JPW
W104	Jumper (#04)	MCR10-JPW
W105	Jumper (#05, #07, #09)	MCR10-JPW
W106	Jumper	MCR10-JPW
W107	Wire	24/02/115/W01/Y
W108	Wire	24/01/115/W01/Y
W109	Wire	71/98/005/W98/W98
W111	Wire	24/04/050/W01/W01
W112	Wire	24/00/050/W01/W01
W113	Wire	73/98/008/X98/X98
W114	Wire	73/98/008/X98/X98
W115	Wire	23/00/060/W01/W01
W117	Jumper	MCR10-JPW
W118	Wire	72/98/007/X98/X98
W119	Wire	72/98/007/X98/X98

[RF UNIT]

REF. NO.	DESCRIPTION	PART NO.
IC301	IC	MC3357D
Q301	Transistor	2SC3772 3
Q302	Transistor	2SC3772 3
Q303	Transistor	2SC3770 3

[RF UNIT]

REF. NO.	DESCRIPTION	PART NO.
Q304	Transistor	2SC3772 3
Q305	Transistor	2SC2407
Q306	Transistor	2SC3019
Q307	Transistor	2SC4167-01
Q308	Transistor	2SC3770 3
Q309	Transistor	2SC3770 3
Q310	Transistor	2SC2712 BL
Q312	Transistor	2SC2712 BL
Q313	Transistor	2SB798 DK
Q314	Transistor	2SC2712 BL
Q315	Transistor	2SC2712 BL
Q316	Transistor	2SC2712 BL
Q317	Transistor	2SC2712 BL
Q318	Transistor	2SA1162 GR
Q319	Transistor	2SA1162 GR
Q320	Transistor	2SC2712 BL
Q321	Transistor	2SA1162 GR
Q322	Transistor	2SC3772 3
D301	Diode	1SS216
D302	Diode	1SS153
D303	Diode	MA862
D304	Diode	1SS216
D305	Diode	1SS196
D306	Diode	HSM88AS
D307	Diode	1SS211
D308	Diode	HSM88AS
D309	Diode	1SS211
D310	Diode	1SS184
D311	Diode	1SS187
D312	Diode	1SS211
D313	Diode (#04)	1SS211
D316	Diode	1SS184
FI301	Crystal	23M15B2
FI302	Ceramic	CFUM455E
X301	Crystal	CR188 22.695MHz
X302	Discriminator	CDB455C7A
L301	Coil	LA-223
L302	Coil	LA-223
L303	Coil	LA-223
L304	Coil	LAL02NA R82M
L305	Coil	LA-223
L306	Coil	LA-223
L307	Coil (#04, #07, #09)	7HW-252SXP-2380A
L307	Coil (#05)	7HW-252SXP-2408A
L309	Coil (#04, #07, #09)	7HW-252SXP-2380A
L309	Coil (#05)	7HW-252SXP-2408A
L310	Coil	LS-264
L311	Coil	LS-264
L312	Coil	LA-223
L313	Coil	LA-226
L314	Coil	LA-222
L315	Coil	LA-223
L316	Coil	LA-222
L317	Coil	LA-222
L318	Coil	LA-223
R301	Resistor	10kΩ ELR20
R302	Chip	15kΩ MCR10
R303	Chip	330Ω MCR10
R304	Chip	47Ω MCR10
R305	Chip	56kΩ MCR10

ManualsPlus.com

[RF UNIT]

REF. NO.	DESCRIPTION	PART NO.	
R306	Chip	47Ω	MCR10
R307	Chip	220Ω	MCR10
R308	Resistor	150kΩ	ELR10
R309	Resistor	68kΩ	ELR10
R310	Chip	47Ω	MCR10
R311	Chip	1kΩ	MCR10
R312	Chip	22kΩ	MCR10
R313	Chip	47kΩ	MCR10
R314	Chip	2.2kΩ	MCR10
R315	Chip	150Ω	MCR10
R316	Chip	22kΩ	MCR10
R317	Chip	1.5kΩ	MCR10
R318	Chip	470Ω	MCR10
R319	Chip	2.7kΩ	MCR10
R320	Chip	27kΩ	MCR10
R321	Chip	1.5kΩ	MCR10
R322	Chip	47kΩ	MCR10
R323	Chip	1.5kΩ	MCR10
R324	Resistor	4.7kΩ	ELR20
R325	Chip	470Ω	MCR10
R326	Chip	22Ω	MCR10
R327	Chip	220Ω	MCR10
R328	Chip	22Ω	MCR10
R329	Chip	47Ω	MCR10
R330	Trimmer	330Ω	RH0521CN2J05A
R331	Resistor	2.2Ω	R20
R332	Chip	22Ω	MCR10
R333	Chip	470Ω	MCR10
R334	Chip	33kΩ	MCR10
R335	Resistor	560kΩ	ELR20
R336	Trimmer	22kΩ	RH0521CJ4J06A
R337	Resistor	680kΩ	ELR20
R338	Resistor	10kΩ	ELR20
R339	Chip	330kΩ	MCR10
R340	Chip	330kΩ	MCR10
R341	Chip	1MΩ	MCR10
R342	Chip	100kΩ	MCR10
R343	Chip	10kΩ	MCR10
R345	Chip	1kΩ	MCR10
R346	Chip	100kΩ	MCR10
R347	Chip	330kΩ	MCR10
R348	Chip	2.2kΩ	MCR10
R349	Chip	2.2kΩ	MCR10
R350	Resistor	2.2Ω	ELR20
R351	Chip	150Ω	MCR10
R352	Resistor	4.7kΩ	ELR20
R353	Chip	39kΩ	MCR10
R354	Chip	39kΩ	MCR10
R355	Chip	4.7kΩ	MCR10
R356	Chip	330kΩ	MCR10
R357	Chip	2.2kΩ	MCR10
R358	Chip	150kΩ	MCR10
R359	Chip	15kΩ	MCR10
R360	Resistor	68kΩ	ELR20
R361	Chip	47kΩ	MCR10
R362	Resistor	470kΩ	ELR20
R363	Resistor	100kΩ	ELR20
R364	Chip	5.6kΩ	MCR10
R365	Chip	100kΩ	MCR10
R370	Chip	22Ω	MCR10
R371	Chip	22kΩ	MCR10
R372	Chip	82kΩ	MCR10
R373	Chip	47Ω	MCR10
R374	Chip	22Ω	MCR10
R375	Chip	10Ω	MCR10
R376	Resistor	10Ω	R20
R377	Resistor	150kΩ	ELR20
R378	Chip	100Ω	MCR10
C301	Monolithic	15pF	GRM40
C302	Monolithic	12pF	GRM40
C303	Monolithic	47pF	GRM40
C304	Monolithic	4pF	GRM40
C305	Monolithic	47pF	GRM40

[RF UNIT]

REF. NO.	DESCRIPTION	PART NO.	
C306	Monolithic	4pF	GRM40
C308	Monolithic	15pF	GRM40
C309	Monolithic	7pF	GRM40
C310	Monolithic	470pF	GRM40
C311	Monolithic	470pF	GRM40
C312	Monolithic	470pF	GRM40
C313	Monolithic	470pF	GRM40
C314	Monolithic	470pF	GRM40
C315	Monolithic	0.5pF	GRM40
C316	Monolithic	470pF	GRM40
C317	Monolithic	4pF	GRM40
C319	Monolithic	0.01μF	GRM40 F
C320	Monolithic	0.1μF	GRM40 F
C321	Monolithic	0.001μF	GRM40
C322	Tantalum	4.7μF	16V DN
C323	Monolithic	0.1μF	GRM40 F
C324	Monolithic	39pF	GRM40
C325	Monolithic	27pF	GRM40
C326	Monolithic	0.001μF	GRM40
C327	Monolithic	0.0047μF	GRM40
C328	Tantalum	0.1μF	35V DN
C329	Barrier Layer	0.01μF	25V
C330	Monolithic	0.1μF	GRM40 F
C331	Monolithic	82pF	GRM40
C332	Monolithic	0.1μF	GRM40 F
C334	Monolithic	470pF	GRM40
C335	Monolithic	470pF	GRM40
C336	Monolithic	470pF	GRM40
C337	Monolithic	470pF	GRM40
C338	Monolithic	470pF	GRM40
C339	Monolithic	4pF	GRM40
C340	Monolithic	470pF	GRM40
C341	Monolithic	470pF	GRM40
C342	Monolithic	10pF	GRM40
C343	Monolithic	470pF	GRM40
C344	Monolithic	470pF	GRM40
C345	Monolithic	470pF	GRM40
C346	Monolithic	470pF	GRM40
C347	Monolithic	470pF	GRM40
C348	Monolithic	470pF	GRM40
C349	Monolithic	4pF	GRM40
C350	Trimmer	10pF	ECR-GA010D30
C351	Monolithic	470pF	GRM40
C352	Monolithic	470pF	GRM40
C353	Monolithic	470pF	GRM40
C354	Monolithic	4pF	GRM40
C355	Trimmer	6pF	ECR-GA006A30
C356	Monolithic	15pF	GRM40
C357	Monolithic	470pF	GRM40
C358	Ceramic	470pF	50V
C359	Monolithic	0.1μF	GRM40 F
C360	Tantalum	0.22μF	35V DN
C361	Monolithic	0.1μF	GRM40 F
C362	Monolithic	0.001μF	GRM40
C363	Monolithic	33pF	GRM40
C364	Monolithic	0.1μF	GRM40 F
C365	Monolithic	0.001μF	GRM40
C366	Electrolytic	47μF	16V MS5
C368	Monolithic	470pF	GRM40
C369	Monolithic	470pF	GRM40
C370	Monolithic	0.1μF	GRM40 F
C371	Monolithic	0.1μF	GRM40 F
C372	Monolithic	0.001μF	GRM40
C373	Monolithic	0.0022μF	GRM40 B
C374	Monolithic	GRM40 B 103K 50PT	
C375	Monolithic	GRM40 B 103K 50PT	
C376	Tantalum	0.47μF	35V DN
C377	Trimmer	20pF	ECR-GA020E30
C378	Monolithic	47pF	GRM40
C379	Tantalum	4.7μF	16V DN
C380	Monolithic	7pF	GRM40
C381	Monolithic	470pF	GRM40
C382	Monolithic	470pF	GRM40
C383	Monolithic	470pF	GRM40
C384	Monolithic	47pF	GRM40

ManualsPlus.com

[RF UNIT]

REF. NO.	DESCRIPTION	PART NO.	
C385	Monolithic	47pF	GRM40
C386	Monolithic	470pF	GRM40
C387	Monolithic	470pF	GRM40
C388	Monolithic	470pF	GRM40
C389	Monolithic	470pF	GRM40
C390	Monolithic	470pF	GRM40
C391	Monolithic	470pF	GRM40
C392	Monolithic	470pF	GRM40
C393	Monolithic	470pF	GRM40
C394	Monolithic	0.001μF	GRM40
J301	Connector	BNC-RM-107	
J302	Connector	07FM-ST	
J303	Connector	TZL-P02P-A1	
J304	Connector	TZB-P02H-A1	
J305	Connector	TZL-P05P-A1	
S301	Switch	SKHMPD	
S302	Switch	SKHMPD	
S303	Switch	SSSS31	
S304	Switch	SSSS31	
EP301	P.C. Board	B1368B	[RF]
EP302	P.C. Board	B1369B	[RF COIL]
EP303	P.C. Board	B1421B	[IF]
EP304	P.C. Board	B1211C	[PTT]
W301	Wire	71/98/030/X98/X98	
W302	Jumper	JPW-01R-01	
W308	Wire	24/01/075/Y/Y	
W309	Wire	24/02/070/W01/Y	
W310	Wire	72/98/050/X98/X98	

[VCO UNIT]

REF. NO.	DESCRIPTION	PART NO.	
Q501	Transistor	2SC3772 3	
Q502	Transistor	2SC3772 3	
Q503	Transistor	2SC3356	
Q504	Transistor	2SC3356	
Q505	Transistor	DTC124EK	
D501	Varicap	MA334 B	
D502	Diode	MA862	
L501	Coil	NL322522-018M	
L502	Coil	NL322522-018M	
L503	Coil	NL322522-033M	
L504	Coil	NL322522-1R0M	
L505	Coil	NL322522-1R0M	
L506	Coil	NL322522-047M	
R501	Chip	470Ω	MCR18
R502	Chip	56kΩ	MCR10
R503	Chip	1kΩ	MCR10
R504	Chip	1kΩ	MCR10
R505	Chip	47kΩ	MCR10
R506	Chip	4.7kΩ	MCR18
R507	Chip	47Ω	MCR18
R508	Chip	3.9kΩ	MCR10
R509	Chip	56Ω	MCR10
R510	Chip	6.8kΩ	MCR10

[VCO UNIT]

REF. NO.	DESCRIPTION	PART NO.	
R511	Chip	22kΩ	MCR10
R512	Chip	220Ω	MCR18
R513	Chip	56kΩ	MCR10
C501	Monolithic	470pF	GRM40
C502	Monolithic	6pF	GRM40
C503	Monolithic	6pF	GRM40
C504	Monolithic	470pF	GRM40
C505	Monolithic	GRM40 SL 0R75C 50PT	
C506	Monolithic	470pF	GRM40
C507	Trimmer	10pF	TZB04N100BA
C508	Monolithic	GRM42-6 SL 010 50PT	
C509	Monolithic	8pF	GRM40
C510	Monolithic	GRM42-6 SL 080 50PT	
C511	Monolithic	7pF	GRM40
C512	Monolithic	0.1μF	GRM40 F
C513	Monolithic	7pF	GRM40
C514	Monolithic	470pF	GRM40
C515	Monolithic	8pF	GRM40
C516	Monolithic	GRM40 SL 0R75C 50PT	
C517	Monolithic	470pF	GRM40
C518	Monolithic	6pF	GRM40
C519	Monolithic	470pF	GRM40
C520	Monolithic	470pF	GRM40
C521	Monolithic	0.1μF	GRM40 F
C522	Monolithic	GRM42-6 B 471K 50PT	
C523	Monolithic	470pF	GRM40
C524	Monolithic	470pF	GRM40
C525	Monolithic	GRM40 SL 0R75C 50PT	
C526	Monolithic	0.1μF	GRM40 F
EP501	P.C. Board	B-1371B	
P501	Connector	TZL-P05H-A1	
W501	Wire	24/05/075/W01/W01	
W502	Shield Cable	[66/99/045/W18/W99A	
W503		08 A]	
W504	Shield Cable	[66/99/045/W18/W99A	
W505		08 A]	
W506	Wire	24/05/035/W01/Y	
W507	Wire	24/08/035/W01/Y	
W508	Wire	24/02/035/W01/Y	
W509	Wire	24/01/035/W01/Y	
W510	Wire	24/00/035/W01/Y	
W511	Wire	72/98/003/X98/X98	

[TONE UNIT] [IC-μ4AT (#05, #09)]

REF. NO.	DESCRIPTION	PART NO.	
IC701	IC	S7116A	
Q701	Transistor	2SC2712 BL	
X701	Crystal	RF4A3 FAA 3.579545MHz	
R701	Trimmer	47kΩB	RH04BPAS4J
R702	Chip	330kΩ	MCR10
R703	Chip	150kΩ	MCR10
R704	Chip	3.3kΩ	MCR10
R705	Chip	1.2kΩ	MCR10
R706	Chip	47kΩ	MCR10

ManualsPlus.com

[TONE UNIT] [IC-μ4AT (#05, #09)]

REF. NO.	DESCRIPTION	PART NO.
C701	Monolithic	47pF GRM40
C702	Monolithic	39pF GRM40
C703	Monolithic	470pF GRM40
C704	Tantalum	0.47μF TESVA1E474M1-8L 25V
C705	Tantalum	0.47μF TESVA1E474M1-8L 25V
S701	Switch	SSGM17 [SUBAUDIBLE TONE FREQUENCY SELECTOR]
EP701	P.C. Board	B-1216C
EP702	F.P.C. Board	B-1319

[TONE CALL UNIT] [IC-μ4E (#04)]

REF. NO.	DESCRIPTION	PART NO.
IC801	IC	TC5082P-G
Q801	Transistor	RN2404
D801	Diode	1SS193
X801	Crystal	RF4A3 FAE (7.168MHz)
R801	Trimmer	10kΩB RH04BPA14J
R802	Chip	47kΩ MCR10
C801	Monolithic	47pF GRM40
C802	Monolithic	10pF GRM40
C803	Monolithic	10pF GRM40
C804	Monolithic	0.001μF GRM40
C805	Tantalum	0.1μF TESVA1V104M1-8L 35V
EP802	P.C. Board	B-1215B
EP803	F.P.C. Board	B-1319

[DTMF UNIT] [IC-μ4AT (#05, #09)]

REF. NO.	DESCRIPTION	PART NO.
IC601	IC	LR40872
Q601	Transistor	2SC2712 BL
D601	Diode	1SS181
X601	Ceramic Resonator	CSAC3.58MGC300CD
R601	Chip	33kΩ MCR10
R602	Trimmer	10kΩB RH04A3A14J
R603	Chip	22kΩ MCR10

[DTMF UNIT] [IC-μ4AT (#05, #09)]

REF. NO.	DESCRIPTION	PART NO.
R604	Chip	47kΩ MCR10
R605	Chip	68kΩ MCR10
C601	Tantalum	0.47μF TESVA1E474M1-8L 25V
C602	Monolithic	GRM40 SL 300J 50PT
C603	Monolithic	GRM40 SL 300J 50PT
C604	Tantalum	10μF TESVC1A106M12L 10V
C605	Monolithic	470pF GRM40
C606	Tantalum	2.2μF TESVA1A225M1-8L 10V
EP601	P.C. Board	B-1218B
EP602	F.P.C. Board	B-1366

ManualsPlus.com

IC-μ4A/AT/E SCHEMATIC DIA

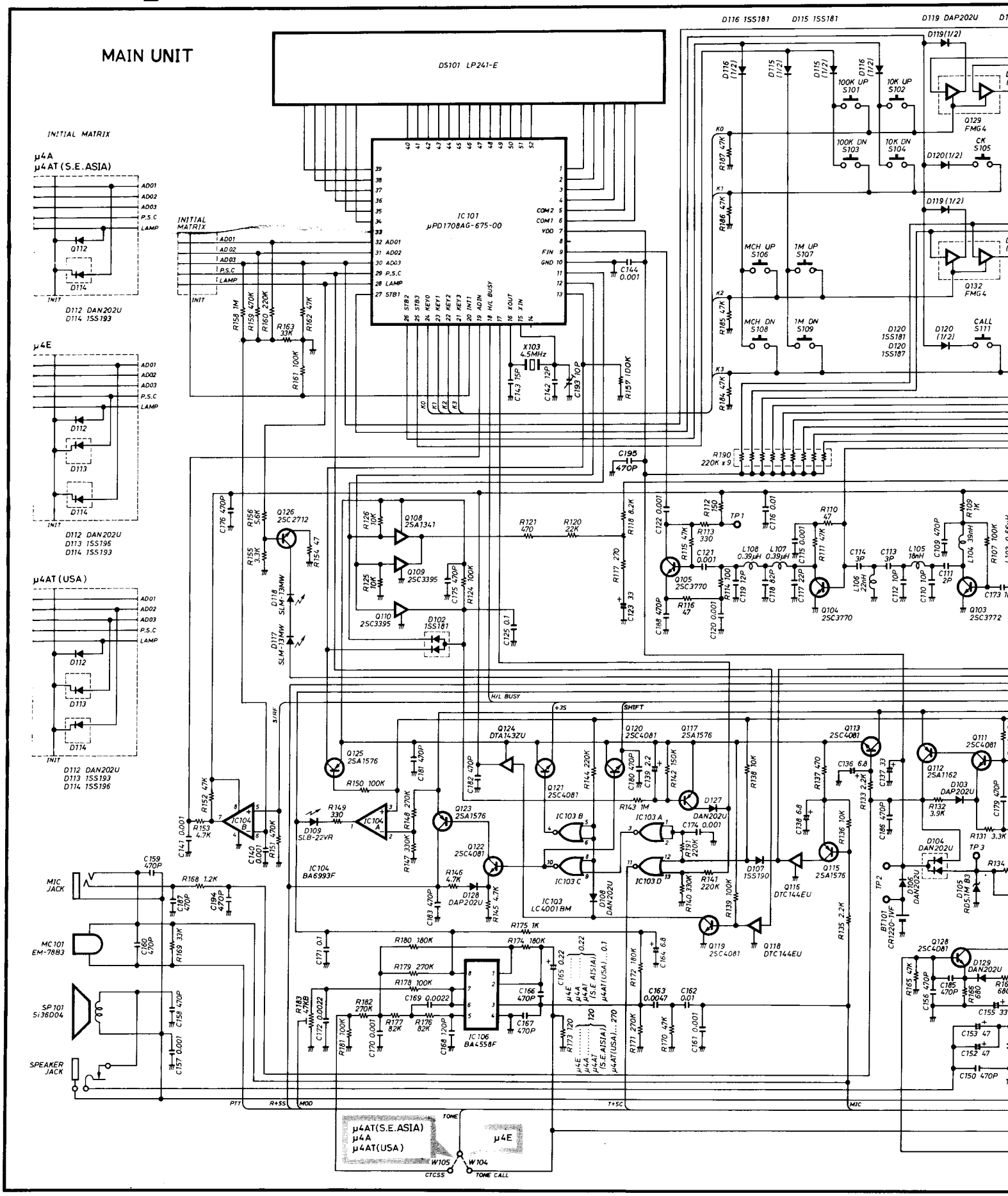

ManualsPlus.com

TIC DIAGRAM

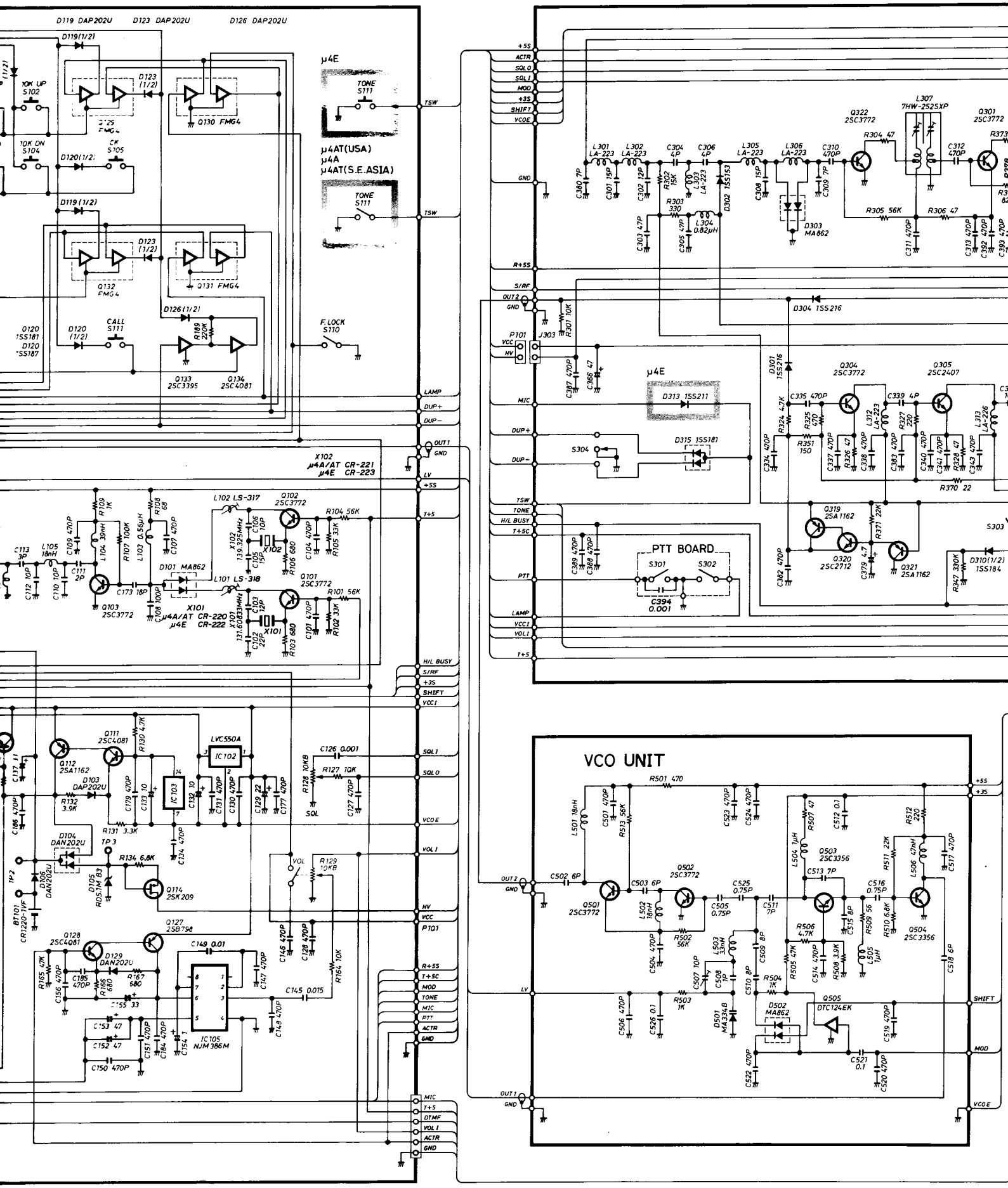

ManualsPlus.com

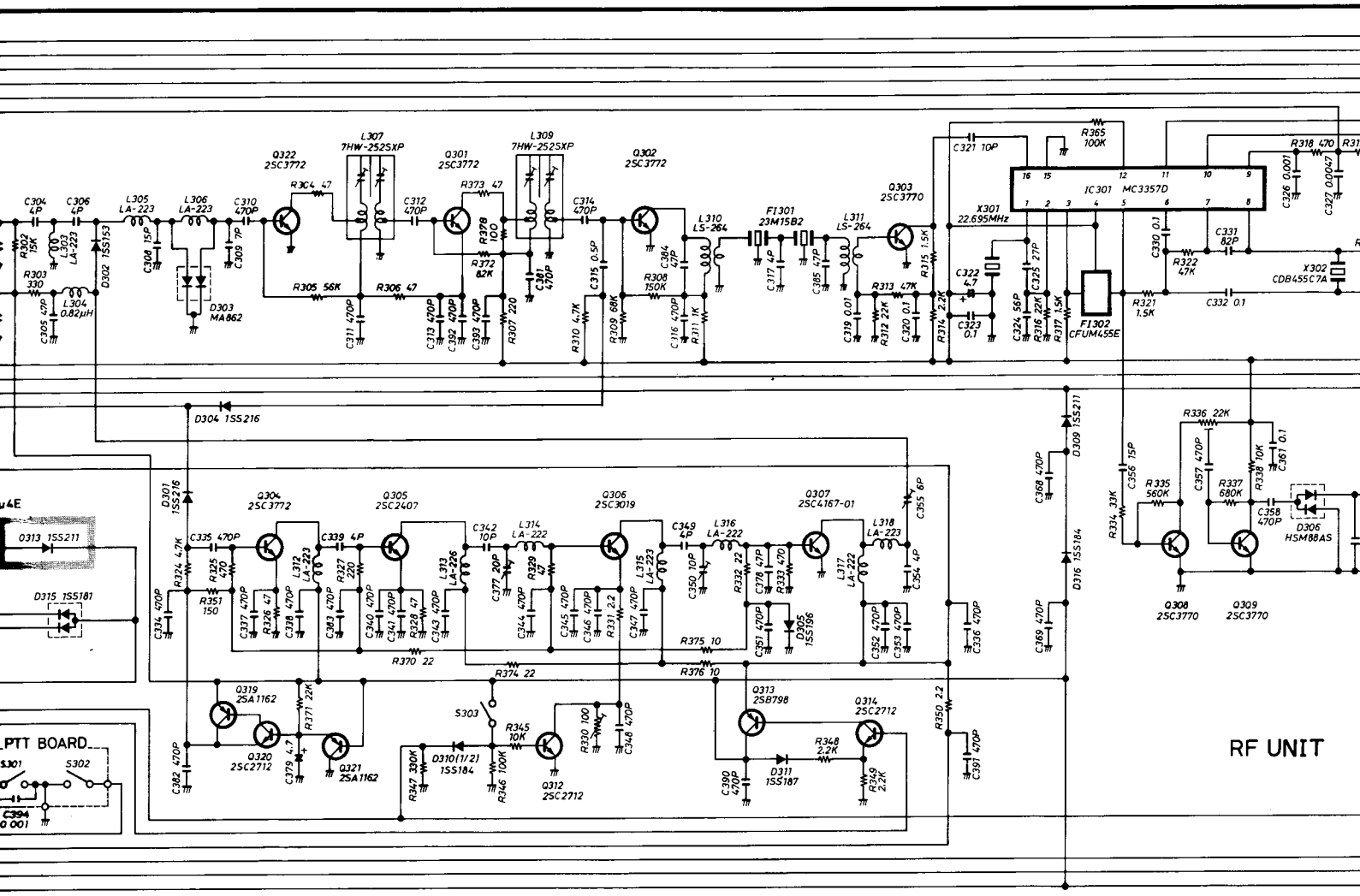

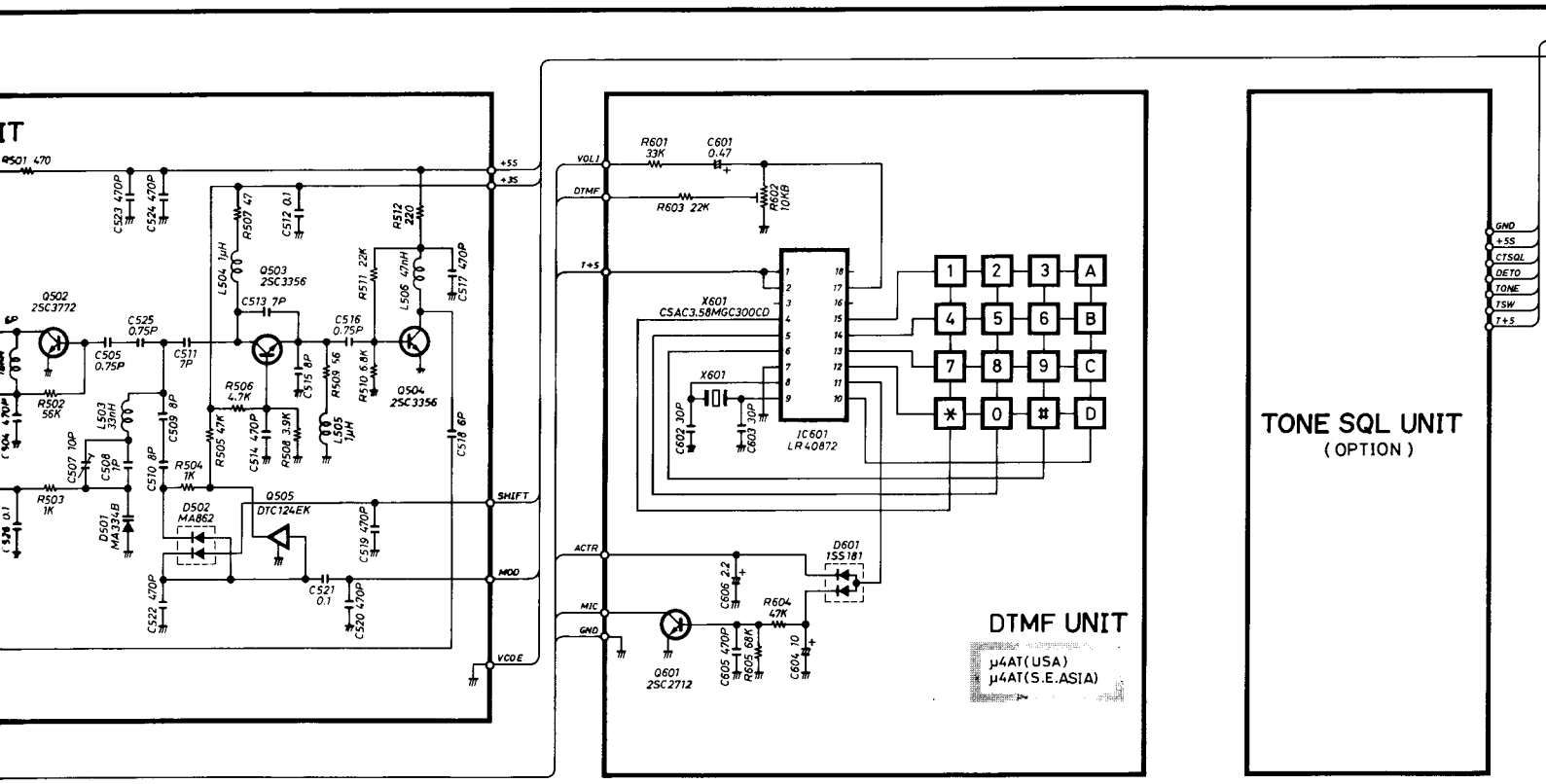

ICOM INCORPOR

ManualsPlus.com

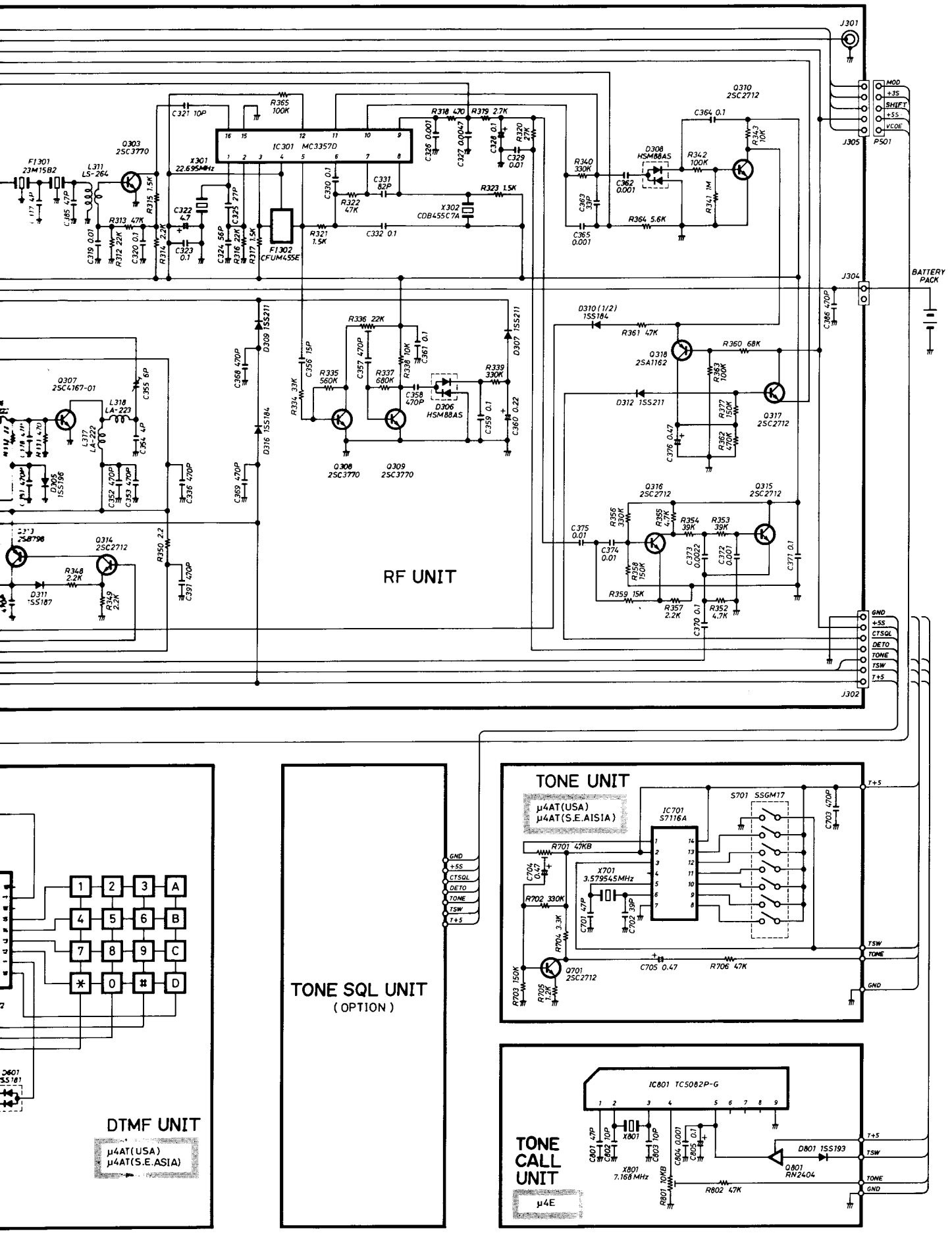

ICOM ICOM INCORPORATED

To upgrade quality, some components may be subject to change without notice.

A-0863A

ManualsPlus.com

ICOM INCORPORATED

1-6-19, Kamikuratsukuri, Hirano-ku, Osaka 547, Japan
Phone: (06) 793-5301
Fax : (06) 793-0013
Telex : 05277822 ICOMTR J

ICOM AMERICA, INC.
2380 116th Avenue N.E.,
Bellevue, WA 98004
Phone: (206) 454-8155
Fax : (206) 454-1509
Telex : 230-152210 ICOM AMER BVUE

3150 Premier Drive, Suite 126,
Irving, TX 75063
Phone: (214) 550-7525
Fax : (214) 550-7423

1777 Phoenix Parkway, Suite 201,
Atlanta, GA 30349
Phone: (404) 991-6166
Fax : (404) 991-6327

ICOM CANADA, LTD.
3071-#5 Road, Unit 9,
Richmond, B.C.,
Canada V6X 2T4
Phone: (604) 273-7400
Fax : (604) 273-1900

ICOM (EUROPE) GmbH
Himmelgeister Strasse 100,
4000 Düsseldorf 1,
West Germany
Phone: 0211-346047
Fax : 0211-333639
Telex : 41-8588082 ICOM D

ICOM AUSTRALIA, PTY., LTD.
7 Duke Street, Windsor 3181,
Victoria, Australia
Phone: (03) 529-7582
Fax : (03) 529-8485
Telex : 71-35521 ICOMAS

ICOM FRANCE S.A.
BP-4063, 120 Route de Revel,
31029 Toulouse CEDEX,
France
Phone: 61.20.31.49
Fax : 61.34.05.91
Telex : 521515 ICOMFRA

ICOM (UK) LIMITED
Unit 9, Sea Street,
Herne Bay, Kent, CT6 8LD
England, U.K.
Phone: (0227) 363859
Fax : (0227) 360155
Telex : 965179 ICOM G