ManualsPlus.com

ICOM

SERVICE MANUAL

WIDEBAND RECEIVER

IC-RX7

S-14510XZ-C1
Aug. 2008

Icom Inc.

ManualsPlus.com

INTRODUCTION

This service manual describes the latest service information for the **IC-RX7** WIDEBAND RECEIVER at the time of publication.

MODEL	VERSION	RX FREQUENCY RANGE (MHz)
IC-RX7	[EUR01]	0.150–1300.000
	[UK-01]	
	[USA-01]	0.150–821.995 851.000–866.995 896.000–1300.000
	[EXP-01]	0.150–1300.000
	[CHN-01]	
	[CAN-01]	

To upgrade quality, any electrical or mechanical parts and internal circuits are subject to change without notice or obligation.

UNIT ABBREVIATIONS:
L=LOGIC UNIT
M=MAIN UNIT

CAUTION

NEVER connect the receiver to an AC outlet or to a DC power supply that uses more than specifed. This will ruin the receiver.

DO NOT expose the receiver to rain, snow or any liquids.

DO NOT reverse the polarities of the power supply when connecting the receiver.

DO NOT apply an RF signal of more than 20 dBm (100 mW) to the antenna connector. This could damage the receiver's front-end.

ORDERING PARTS

Be sure to include the following four points when ordering replacement parts:

1. 10-digit Icom parts numbers
2. Component name
3. Equipment model name and unit name
4. Quantity required

<ORDER EXAMPLE>

1110003491	S.IC	TA31136FNG	IC-RX7	MAIN UNIT	5 pieces
8820001210	Screw	2438 screw	IC-RX7	Top cover	10 pieces

Addresses are provided on the inside back cover for your convenience.

REPAIR NOTES

1. Make sure that the problem is internal before disassembling the receiver.
2. **DO NOT** open the receiver until the receiver is disconnected from its power source.
3. **DO NOT** force any of the variable components. Turn them slowly and smoothly.
4. **DO NOT** short any circuits or electronic parts. An insulated tuning tool **MUST** be used for all adjustments.
5. **DO NOT** keep power ON for a long time when the receiver is defective.
6. **READ** the instructions of test equipment throughly before connecting a test equipment to the receiver.

Icom, Icom Inc. and ICOM logo are registered trademarks of Icom Incorporated (Japan) in the United States, the United Kingdom, Germany, France, Spain, Russia and/or other countries.

ManualsPlus.com

TABLE OF CONTENTS

SECTION 1 SPECIFICATIONS

SECTION 2 INSIDE VIEWS

SECTION 3 DISASSEMBLY INSTRUCTION

SECTION 4 CIRCUIT DESCRIPITON

4-1 MAIN UNIT 4-1
4-2 1st VCO UNIT 4-3
4-3 2nd VCO UNIT 4-4
4-4 VOLTAGE DIAGRAMS 4-4
4-5 PORT ALLOCATIONS 4-5

SECTION 5 ADJUSTMENT PROCEDURES

5-1 PREPARATION 5-1
5-2 FREQUENCY ADJUSTMENT 5-2

SECTION 6 PARTS LIST

SECTION 7 MECHANICAL PARTS

SECTION 8 BOARD LAYOUTS

SECTION 9 BLOCK DIAGRAM

SECTION 10 VOLTAGE DIAGRAMS

LOGIC UNIT (Left side) 10-1
LOGIC UNIT (Right side) 10-2
MAIN UNIT (Left side) 10-3
MAIN UNIT (Right side) 10-4
1st VCO UNIT 10-5
2nd VCO UNIT 10-5

ManualsPlus.com

SECTION 1 SPECIFICATIONS

◇ General

- Frequency coverage : (Unit: MHz)
  - USA: 0.150–821.995, 851.000–866.995, 896.000–1300.000
  - Other than USA: 0.150–1300.000
- Number of memory channels : 1600 channels (Memory channels)
  200 channels (Auto write channels)
  25 channels (Scan edge channels)
- Receive modes : FM, AM, WFM
- Frequency resolution : 5, 6.25, 7.5, *8.33,*9, 10, 12.5, 15, 20, 25, 30, 50, 100, 125, 200 kHz
  *selectable depending on the operating frequency band.
- Operating temperature range : –10°C to +60˚C; +14˚F to +140˚F
- Reference frequency stability : ±6 ppm (–10˚C to +60˚C; +14˚F to +140˚F)
- Power supply requirement (Negative ground) : BP-244 (Li-Ion battery pack), BP-262 (3 AA (LR6) alkaline cells) or 5.1 to 6.9 V DC (with CP-18A/E)
- Current drain (backlight OFF with BP-244 (3.7 V DC):
  - rated audio: 150 mA typical
  - receive standby: 100 mA typical
  - power saved: 35 mA typical
- Antenna connector type : SMA
- Antenna impedance : 50 Ω (unbalanced)
- Dimensions (proj. not included) : 57(W) × 128(H) × 23(D) mm
  2¼(W)×5 1/32(H)×29/32(D) in
- Weight (approx.) : 200 g; 7.1 oz (with the ant. and BP-244)
- AF output power (at 3.7 V DC) : More than 600 mW at 70% modulation, 10% distortion with an 8 Ω load
- Ext. speaker connector : 3-conductor 3.5 (d) mm (⅛″)/8 Ω

◇ Receiver

- Receive system : Triple-conversion superheterodyne
- Intermediate frequencies : 1st : 429.1 MHz,
  2nd : 19.65 MHz (FM/AM), 20.75 MHz (WFM)
  3rd : 450 kHz (FM/AM), 1.55 MHz (WFM)
- Sensitivity (except spurious points) :

FM (1 kHz/3.5 kHz Dev.; 12 dB SINAD)	
1.625–4.995 MHz	Less than 0.56 μV
5.000–246.995 MHz	Less than 0.4 μV
247.000–832.995 MHz	Less than 0.56 μV
833.000–1300.000 MHz	Less than 0.79 μV (Except USA version)
851.000–866.995 MHz	Less than 1.3 μV (USA version only)
896.000–1300.000 MHz	Less than 0.79 μV (USA version only)
WFM (1 kHz/52.5 kHz Dev.; 12 dB SINAD)	
76.000–108.000 MHz	Less than 1.8 μV
175.000–221.995 MHz	Less than 1.8 μV
470.000–770.000 MHz	Less than 2.5 μV
AM EXT-ANT (DX) (1 kHz/30% MOD.; 10 dB S/N)	
0.495–4.995 MHz	Less than 2.5 μV
5.000–29.995 MHz	Less than 1.8 μV
118.000–136.000 MHz	Less than 1.8 μV
222.000–246.995 MHz	Less than 1.8 μV
247.000–329.995 MHz	Less than 1.8 μV

- Selectivity :

AM/FM	More than 15 kHz/–9 dB
	Less than 30 kHz/–60 dB
WFM	More than 150 kHz/–6 dB

ManualsPlus.com

• LOGIC UNIT

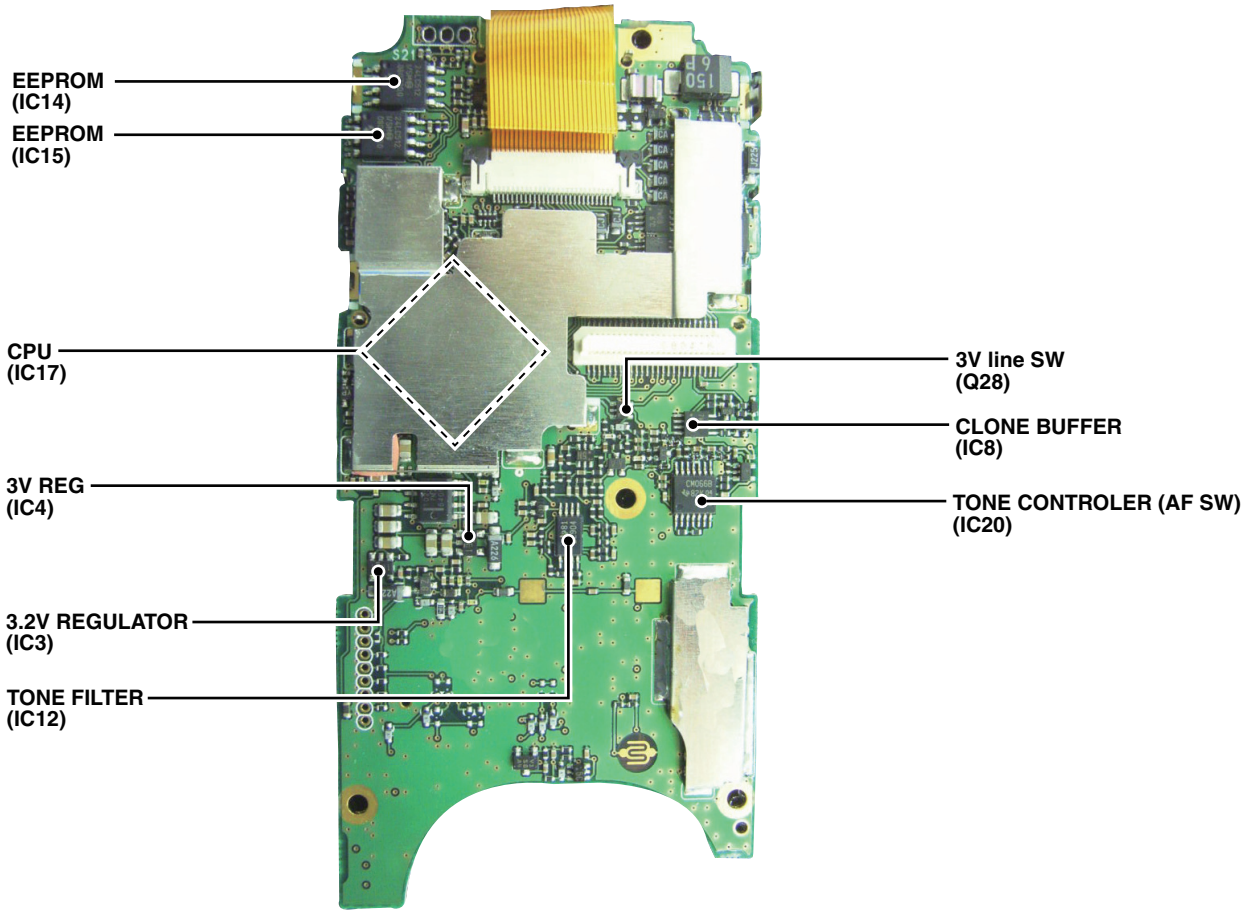

• MAIN UNIT

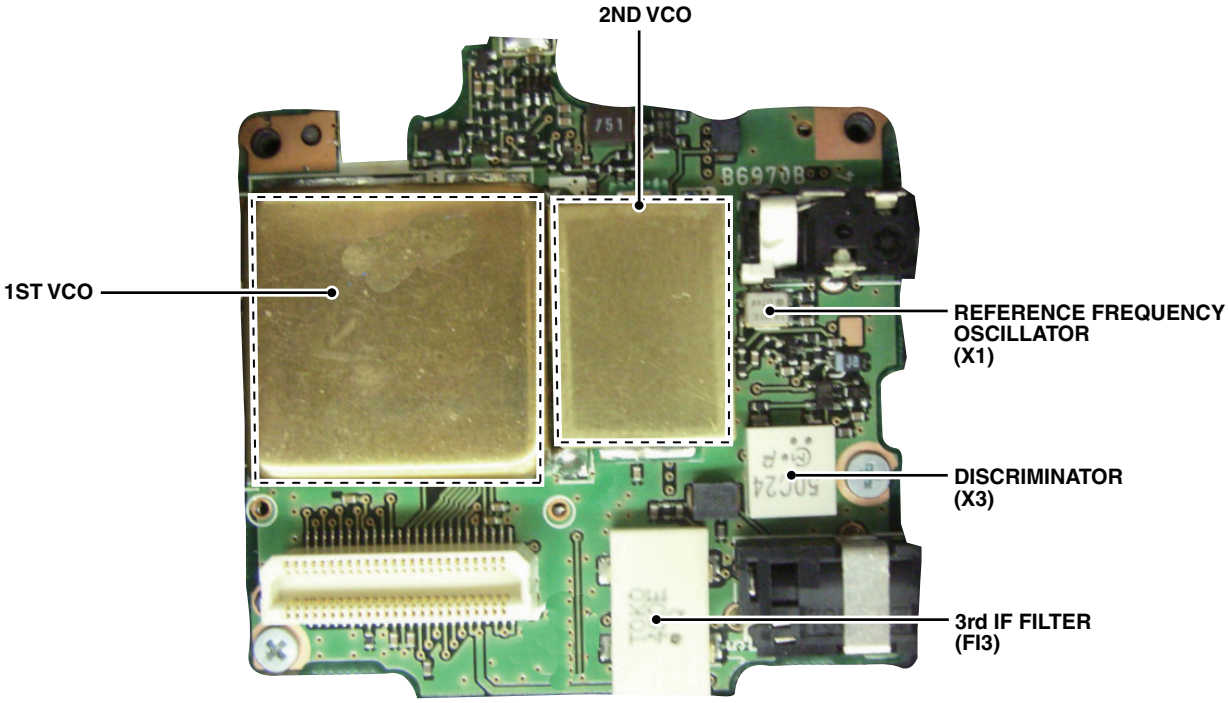

ManualsPlus.com

SECTION 3 DISASSEMBLY INSTRUCTION

1. Removing the front panel

① Unscrew 4 screws from the rear panel.

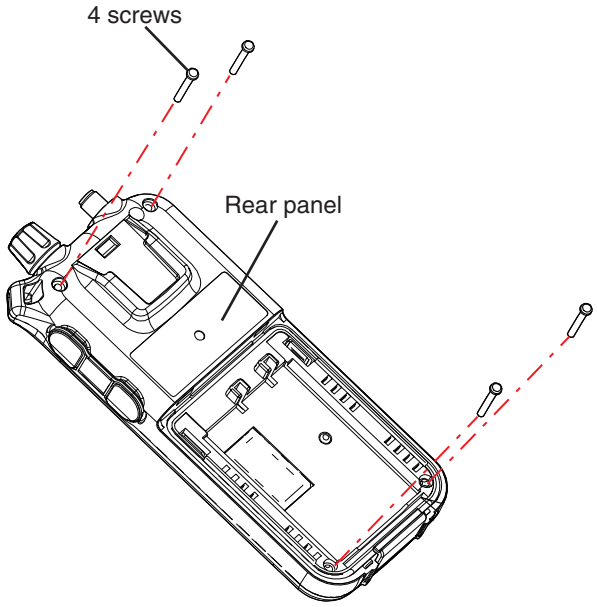

② Release the both sides of notches, and remove the front panel.

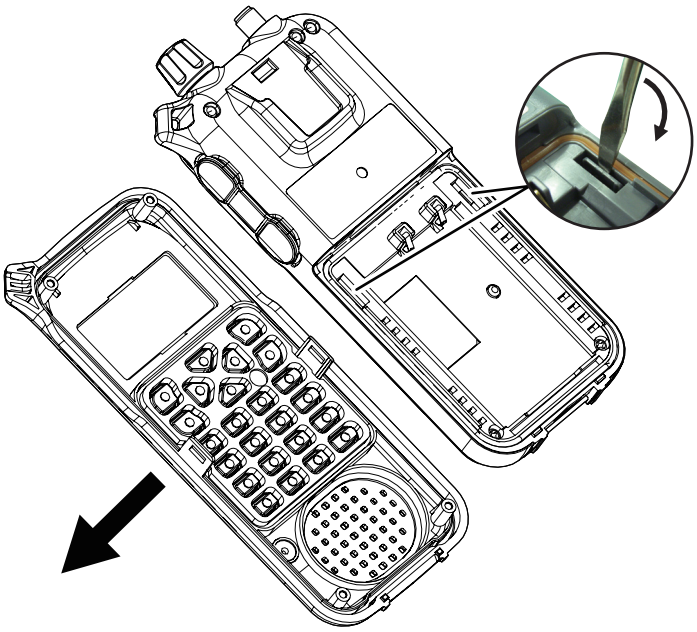

2. Removing the LOGIC UNIT

① Unscrew total of 4 screws from the LOGIC UNIT.

② Unsolder 3 points at the rotary encoder (CONTROL DIAL), then remove the LOGIC UNIT from the rear panel.

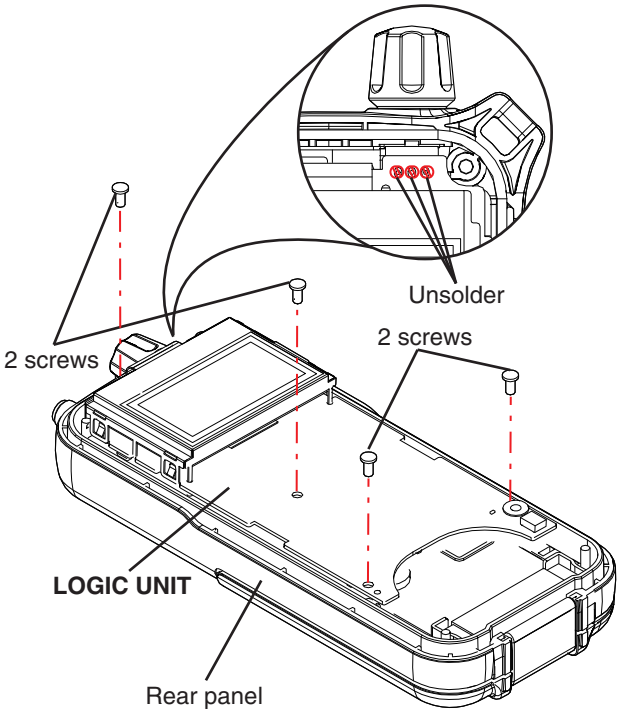

3. Removing the MAIN UNIT

① Unscrew 5 screws from the MAIN UNIT

② Unsolder 1 point at the bottom of antenna conector, then remove the MAIN UNIT from the rea panel.

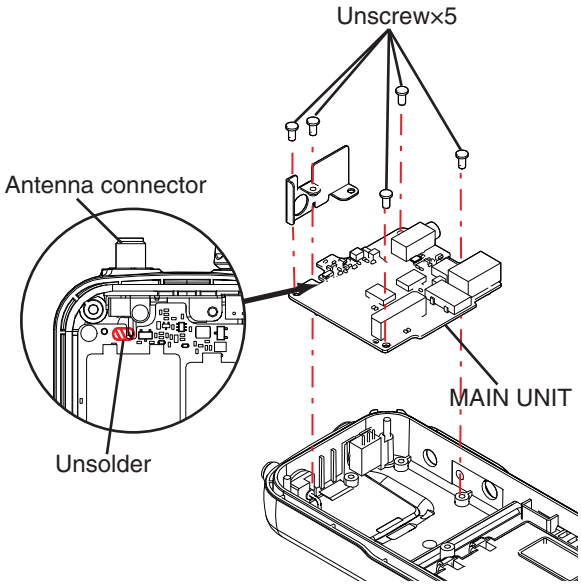

ManualsPlus.com

SECTION 4 CIRCUIT DESCRIPTION

4-1 MAIN UNIT

MAIN UNIT has RF circuits, 1st and 2nd IF circuits, FM and AM demodulator circuits. The RX signals from the antenna are filtered, amplified and converted into the 1st and 2nd IF signals in sequence, then FM/AM-demodulated.

ATTENUATOR CIRCUIT

RF signals from the antenna are passed through the limiter (D1) and ATT SW (D2), then applied to the band SWs which select the appropriate bandpass/low-pass filter according to the RX frequency.

When the attenuator is inactivated, Q2 is OFF and the RX signals are passed through D2. When the attenuator is activated, Q2 is ON and the RX signals are passed through the attenuator for 20 dB attenuation. The switching of Q2 and D2 is carried out by Q3 with the control signal "ATT."

RF AMP/FILTER CIRCUITS (BC/HF BAND)

The 0.15–76 MHz RX signals are passed through the diode SW (D4) and LPF for unwanted signal removal and diode SW (D28), then applied to the RF AMP (Q12, D33, 34).

When the “external antenna” is selected for AM broadcast RX, the 0.5–3 MHz RX signals are passed through the diode SW (D5) and the BPF (D53, etc.), then applied to the RF AMP (Q12, D33, 34) via the diode SW (D29).

When the “internal bar antenna” is selected, the 0.5–1.6 MHz RX signal is passed through the diode SW (D27) and applied to the RF AMP (Q12, D33, 34) via the diode SW (D29).

The amplified RX signals from the RF AMP (Q12, D33, 34) are applied to the wide band RF AMP (IC1) via the diode SW (D37).

RF AMP/ FILTER CIRCUITS (VHF BAND)

The 76–350 MHz RX signals are passed through the diode SW (D7) and HPF/LPF (D57, etc.) for unwanted signal removal, and applied to the RF AMP (Q7, D14, 15).

The amplified RX signals are passed through the tuned BPF (D31, 35, 58, etc.) for unwanted signal removal, and applied to the wide band RF AMP (IC1) via the diode SW (D38).

When the RX frequency is 160 MHz and higher, the center frequency of BPF is shifted to higher by D51 and D52.

RF AMP/FILTER CIRCUITS (UHF BAND)

The 350–470 MHz RX signals are passed through the diode SW (D8) and HPF/LPF for unwanted signal removal, and applied to the RF AMP (Q41, 42, D18, 19).

The amplified RX signals are passed through the tuned BPF (D32, 36, etc.) for unwanted signal removal, and applied to the wide band RF AMP (IC1) via the diode SW (D40).

RF AMP/FILTER CIRCUITS (800 MHz BAND)

The 470–833 MHz RX signals are passed through the diode SW (D9) and tuned BPF (D12, 13, etc.) for unwanted signal removal, and applied to the RF AMP (Q5, D20, 21).

The amplified RX signals are passed through the tuned BPF (D25, 26, etc.) for unwanted signal removal, and applied to the wide band RF AMP (IC1) via the diode SW (D41)

RF AMP/FILTER CIRCUITS (1 GHz BAND)

The 833–1300 MHz RX signals are passed through the diode SW (D10) and HPF/LPF for unwanted signal removal, and applied to the RF AMP (Q6, D22, 23).

The amplified RX signals are applied to the wide band RF AMP (IC1) via the diode SW (D42).

REGULATOR SWs

The power supply for each RF circuit (3V) is switched by Q11, 17, 18 and 19.

1st MIXER and 2nd MIXER

The RX signals from each RF circuit are amplified by the wideband RF AMP (IC1) and passed through the attenuator, then applied to the 1st mixer (IC5). The RX signals are mixed with the 1st LO signals from the 1st VCO UNIT to be converted into the 429.1 MHz 1st IF signal.

The 429.1 MHz 1st IF signal is filtered by the 1st IF filter (FI1) to remove unwanted signals, then applied to the 2nd mixer (IC8).

The 2nd IF signal is mixed with 2nd LO signals from the 2nd VCO UNIT to be converted into the 2nd IF signal; 19.65 MHz for AM/FM mode, 20.75 MHz for WFM mode.

In AM/FM mode operation, the 2nd IF signal is filtered by the 2nd IF filter (FI2) to remove unwanted signals, then applied to the 2nd IF AMP (Q31).

In WFM mode operation, the 2nd IF signal is by-passed the 2nd IF filter (FI2).

The path of 1st IF signal is switched by diode SWs (D44, 49).

3rd IF, DEMODULATOR and AGC CIRCUITS

The 2nd IF signal from the 2nd IF AMP (Q11) is applied to IC13. IC is the IF IC which contains mixer, limiter, quadrature detector and RSSI circuit in its package.

The 2nd IF signal is mixed with the 3rd LO signal from the LO AMP (Q36) to be converted into the 3rd IF signal; 450 kHz for AM/FM mode, 1.55 MHz for WFM mode.

• AM/FM MODE

The 3rd IF signal is filtered by the 3rd IF filter (FI3) to remove unwanted signals, and applied to the each detector circuit (AM or FM detector).

• WFM MODE

The 3rd IF signal is by-passed FI3, and applied to the FM demodulator circuit. The path of 3rd IF signal is switched by diode SWs (D47, 48) controlled by Q37.

In FM mode operation, the 3rd IF signal (450 kHz) is FM-demodulated by the ceramic discriminator (X3).

In WFM mode operation, the 3rd IF signal (1.55 MHz) is FM-demodulated by the LC resonator for WFM demodulation. The switching of mode (WFM) is controlled by Q38, 40.

• AM MODE

The 3rd IF signal is amplified by Q26 and AM-demodulated by Q25.

In each mode, the detected DC components are feedback

to the RF AMP and IF AMP for AGC operation. The demodulated AF signals are entered to the LOGIC UNIT via AF SW (IC9).

REFERENCE FREQUENCY CIRCUIT

The reference frequency for both of 1st and 2nd VCO UNITs is generated by the reference frequency oscillator TCXO (X1).

The reference frequency signal is used as the 3rd LO signal too.

• INTERMEDIATE FREQUENCIES (IF)

	WFM	FM	AM
1st IF Frequency	429.1 MHz		
2nd IF Frequency	20.75 MHz	19.65 MHz	
3rd IF Frequency	1.55 MHz	450 kHz	

4-2 1st VCO UNIT

The 1st VCO UNIT has 4 VCOs and each VCO oscillates 1st LO signals for each band (SW, BC, VHF, UHF, 800 MHz and 1 GHz).

• Loop Filter

IC3 is a PLL IC, and the resulting signal of phase-comparison is DC converted by the loop filter; active-filter (Q6, Q7, R24, C38, C39) and passive filter (R35, C48), then the voltage (Lock voltage) controls the oscillation frequency of VCOs.

• OSC AMP

Q12 is a OSC AMP, and amplifies the OSC signals from the MAIN UNIT, then the OSC signals are applied to IC3.

• 1VCO

1 VCO is the oscillator composed by Q1, D1, D2, L3, C3, C4, and oscillates the 1st LO signals for receiving 510–741.5 MHz .

• 2VCO

2 VCO is the oscillator composed by Q2, D3, L6, C11, C16, and oscillates the 1st LO signals for receiving 283–510 MHz and 1130–1300MHz.

• 3VCO

3 VCO is the oscillator composed by Q3, D4, L9, C20, and oscillates the 1st LO signals for receiving 83.5–283 MHz and 950–1130MHz.

• 4VCO

4VCO is the oscillator composed by Q4, D5, L12, C27, C28, and oscillates the 1st LO signals for receiving 0.15–83.5 MHz and 741.5–950MHz.

• BUFFER AMP

The each VCO output signals are passed through the LO SW (D7–10) and amplified by the buffer AMP (IC2), then applied to the both of PLL IC (IC3, via Q8) and MAIN UNIT as the 1st LO signals.

• VCO OSCILLATION FREQUENCY

	OSCILLATION FREQUENCY	RX FREQUENCY
VCO1	939.1000–1170.1495 MHz	510–741.0499 MHz
VCO2	712.1000–939.0999 MHz	283–509.9999 MHz
	700.9000–875.8999 MHz	1130–1304.9999 MHz
VCO3	512.6000–712.0995 MHz	83.5–282.9999 MHz
	525.9000–700.8999 MHz	950–1129.9999 MHz
VCO4	429.25–512.5999 MHZ	0.15–83.4999 MHz
	311.9500–520.8999 MHz	741.05–949.9999 MHz

ManualsPlus.com

4-3 2nd VCO UNIT

The 2nd VCO UNIT oscillates the 2nd LO signals. The VCO oscillates 409.4500/448.7500 MHz signal in FM/AM mode, and oscillates 408.3500/449.8500 MHz signal in WFM mode .

• VCO

The oscillator is composed by Q1, D1, C2–5, L1.

The VCO output signals are passed through the LPF that composed by L3, C8, C9 and C10, and then applied to IC1 and MAIN UNIT as the 2nd LO signals.

• OSC AMP

Q3 is the OSC AMP and amplifies the reference frequency signal from the MAIN UNIT, then the reference signal is applied to PLL IC (IC1).

• Loop Filter

The pulse-type signal from the PLL IC is DC-converted by the loop filter (the lug lead filter) which is composed by C21, R15 and R22, C1, to control the oscillating frequency of the VCO.

• Ripple Filter

The ripple filter is composed by Q4, C32 and R21, and removes ripples contained in the voltage line for regulated voltage for the VCO.

ManualsPlus.com

4-4 LOGIC UNIT

The LOGIC UNIT has CPU, D/A converter (DAC), AF circuits and power supply circuits. The CPU and DAC control the whole operation of the receiver (RX frequency setting, BPF tuning etc.), and the AF circuits filter, amplify and tone-control the demodulated AF signals. The power supply circuits supply the voltage for each circuits.

CPU

IC17 is a 16 bits CPU that integrated ROM, RAM, the intrude controller, real time pulse unit, serial interface and A/D converter on the chip, and the CPU and external EEPROM (IC14 and IC15) compose the main control system of receiver.

RESET CIRCUIT

RESET CIRCUIT power-detects of ON/OFF with IC6, and resets the CPU when the receiver is turned ON/OFF.

CLOCK CIRCUIT

The clock frequency (around 12.288 MHz) of the CPU is oscillated by X1, C19 and 22. The clock frequency is able to be shifted to prevent spurious interference.

DAC

IC16 is a 3-ch 8-bit D/A converter. The DAC controls the LO frequencies, gain of RF AMP, tuning voltage, etc. according to the serial data from the CPU.

DC UPCONVERTER

The clock signal from the CPU is upconverted to 12 V DC by the full-wave rectification circuit (IC11, D24 to 27). The upconverted voltage is passed through the ripple filter (Q24, C158, 195) then applied to the VP terminal of PLL IC as the charge pump voltage.

POWER SUPPLY CIRCUITS

IC3 is a 3.2 V 3-terminal regulator and supplies voltage to CPU, EEPROM and RESET IC. While the receiver's power is ON, +3 V DC is provided by Q2.

IC4 is also 3.2 V 3-terminal regulator and supplies 3 V (as R3V) in power save mode.

BAR ANTENNA TUNING CIRCUIT

The internal bar antenna for AM broadcast band RX is tuned to the frequency to receive by varying the capacitance of D19 using the voltage from DC-DC upconverter via Q21 and D37.

DECODE CIRCUIT

The demodulated AF signals "DET" from each detector circuit are passed through the tone filter (1/2 of IC12) and applied to the CPU for tone signal interpretation.

Another 1/2 of IC12 composes the LPF for VSC function, and cut the AF line when unwanted continuous audible signals is out there.

The demodulated AF signals from detector circuit are also applied to the CPU for other tone signals interpretation (WX/MSK) via some LPFs.

AF CIRCUITS

Other than WFM mode operation, and when the AF filter is activated, the demodulated AF signals are passed through the AF filter (Q20) and applied to Q18.

In WFM mode operation, and when the AF filter is inactivated, the demodulated AF signals are passed through Q23 and applied to Q18.

The amplified AF signals from Q18 are applied to the tone controller (IC19). The tone controller adjusts the frequency characteristic of the AF signals. The output signals of tone controller are then applied to the electric VR IC (IC10) and level-adjusted.

AF AMP

The level-adjusted AF signals are power-amplified by the speaker AMP (IC9), then applied to the external/internal speaker.

CHARGING CONTROL CIRCUIT

IC18 is a charge control IC that contains battery connect detection, full charge detection, charging current control, temperature detection, etc. The remaining battery capacity and type of battery is detected by the voltage to be applied to pin 2, and the IC interpret whether pre-charge is necessary or not.

The charging period is set by resisters connected to the pins 2 and 6, and the temperature is ministered by the voltage to be applied to pin 8 with external thermostat.

While charging, pin 3 outputs "L" level to the CPU for charging indication on the LCD. Only when an external power supply is connected and chargeable batteries are detected through "BDET" terminal, the IC permits to start charging.

ManualsPlus.com

4-5 VOLTAGE DIAGRAM

Voltage from the power supply is routed to the whole of the receiver via the regulators and switches.

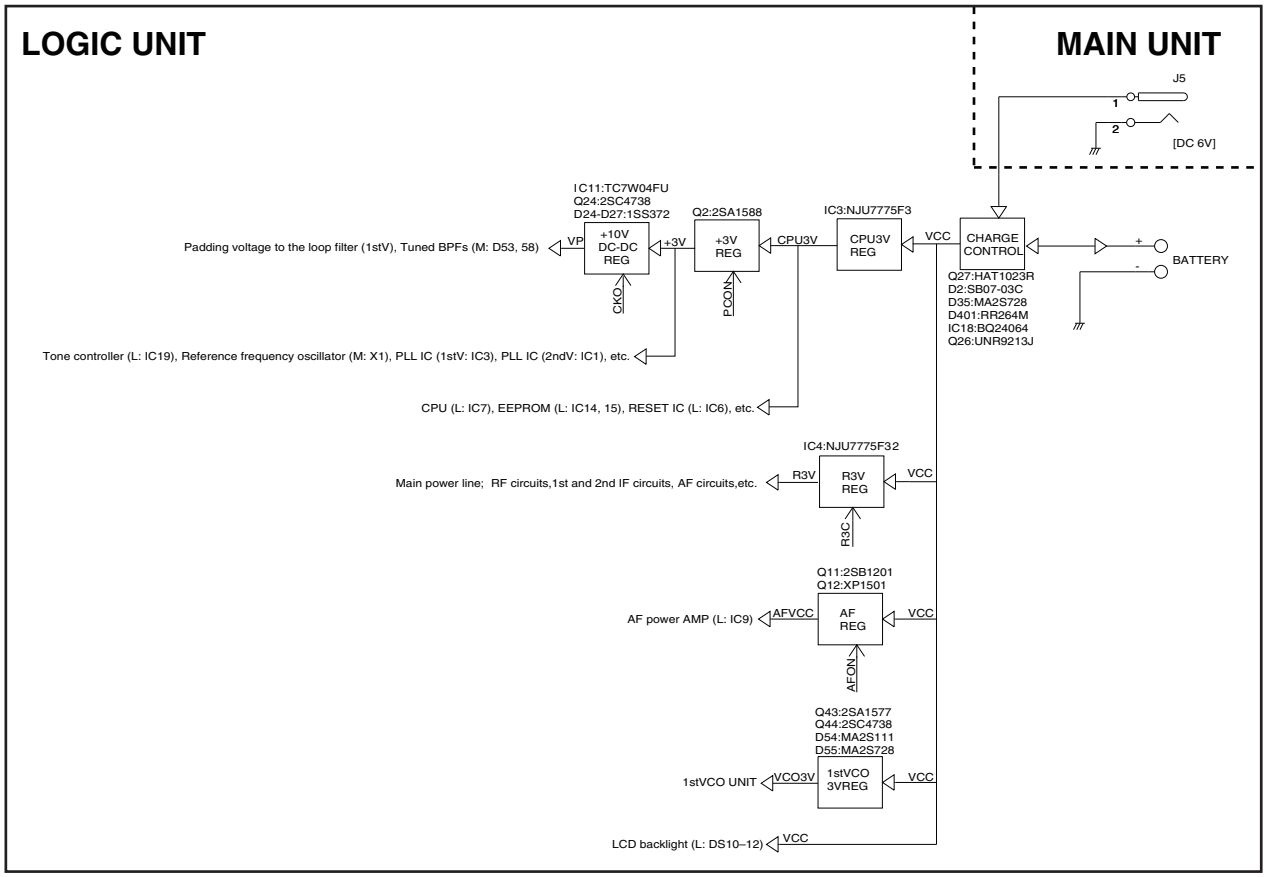

ManualsPlus.com

4-6 CPU PORT ALLOCATION

Pin No.	LINE NAME	DESCRIPTION	I/O
1	KR0	Key matrix.	I
2	PCON	+3V line SW "L"=Power ON	O
3	TCON	Tone filter (L: IC12) SW "L"=Filter activated.	O
4–7	KS0–KS3	Key matrix.	I
8	TREBLE_B	Tone control circuit SW. "H"=Treble-B	O
9	BASS_B	Tone control circuit SW. "H"=Bass-B	O
10	ESIO	EEPROM data I/O.	I/O
11	ECK	EEPROM clock.	O
13	TREBLE_C	Tone control circuit SW. "H"=Treble-C	O
15	BASS_C	Tone control circuit SW. "H"=Bass-C	O
16	TRUTH	AF filter (L: Q20) by-pass SW. "H"=FM mode.	O
17	SHIFT	RX frequency shift. "L"=200 MHz RX.	O
18	LCK	DAC (L: IC16) clock.	O
19	AM	AF line SW (M: IC9) control. "L"=Receiving in AM mode.	O
20	AGCC	AGC function switching. "L"=AGC activated.	O
21	WFM	RX mode switching (phase shifter switching; discriminator/LC resonator). "H"= WFM mode.	O
22	ANTSW	AM broadcast antenna switching. "L"=Internal bar antenna.	O
23	B2C	RF circuit (BC band) control. "L"=BC band RX (Ext. LOCAL antenna).	O
24	B1C	RF circuit (SW band) control. "L"=SW band RX (Ext. DX antenna).	O
25	ATT	Attenuator (M: D2, R2 to 4) control. "L"=Attenuator ON.	O
26	NOISE	Detected noise level (D/A value).	I
27	800MC	RF circuit (800 MHz band) control. "L"=800 MHz band RX.	O
28	GC	RF circuit (1 GHz band) control. "L"=1 GHz band RX.	O
29	UHFC	RF circuit (UHF band) control. "L"=UHF band RX.	O
30	EAR	Earphone antenna control. "L"=Earphone antenna activated.	O
34	DUD	[DIAL] (rotary encoder; L S21)	I
35	DCK	[DIAL] (rotary encoder; L S21)	I
36	LDATA	DAC (L: IC16) data.	I
37	CKO	CPU clock signal to converter (L: IC11, D24–27).	O
38	POWER	[POWER] key.	I
39	DATAC	Common data to the buffer (L: IC1).	O
40	LIGHT	LCD backlight driver (L: Q5) control. "H"=Backlight (L: DS10 to 12) ON.	O
41	AFON	AF power AMP SW (L: Q11, 12) control. "H"=AF power AMP (L: IC9) ON.	O
44	BEEP	Beep sounds (square waves).	I
45	RSSI	RSSI voltage (A/D value).	I
46	RTONE	Demodulated tone signals.	I
47	CTONE	Demodulated tone signals.	I
48	VSCAF	Filtered demodulated signal (extracted voice signal).	I
49	CHG	Charge status. "H"=While pre/fast charging.	I
50	TEMP	Internal temparature according divided voltage by thermister (L: R189)	I
51	BATTI	Battery voltage input (AD value).	I
52	HVIN	DC input voltage monitor (divided voltage of HV line).	I
59	RESET	CPU reset signal.	I
70	CPU CLOCK SHIFT	CPU clock frequency shift.	O
71	VCO1	VCO switching signal. "L"=VCO1 activated (=receiving 510–741 MHz).	O
72	VCO2	VCO switching signal. "L"=VCO1 activated (=receiving 283–510 MHz/1130–1368 MHz).	O
73	VCO3	VCO switching signal. "L"=VCO1 activated (=receiving 83.5–283 MHz/950–1130 MHz).	O
74	VCO4	VCO switching signal. "L"=VCO1 activated (=receiving 0.15–83.5 MHz/741–950 MHz).	O
75	BDET	Battery pack attachment detect. "L"=Battery pack is attached.	I
76	LCDDT	Serial data to the LCD (L: DS13).	O
77	LCDCS	Serial data to the LCD (L: DS13).	O
78	LCDCK	Serial clock to the LCD (L: DS13).	O
79	CL_OUT	Cloning data.	O
80	CL_IN	Cloning data.	I
83	DASTB	Strobe to the DAC (L: IC16).	O
84	VRSTB	Strobe to the VR IC (L: IC10).	O
85	PCK	PLL clock.	O
86	PLDATA	PLL data.	O
87	PSTB1	PLL (1st VCO UNIT; IC3) strobe.	O
88	PSTB2	PLL (2ND VCO UNIT; IC1) strobe.	O
89	PS	Power save mode control for PLL IC. "L"=While in power save mode.	O
90	CHGC	Charge management IC (L: IC18) control. "H"=While charging.	O
91	HVDET	HV line voltage detect. "H"=3 V is applied.	I
92	CL_IN	Cloning data.	I
93	VHF_C	RF circuit (VHF band) control. "L"=VHF band RX.	O
94	HFC	RF circuit (HF band) control. "L"=HF band RX.	O
95	R3C	R3V line SW. (regurator (L: IC4) control signal) "H"=R3V line is ON. (the regulator is enable)	O
96–100	KR5–KR1	Key matrix.	I

ManualsPlus.com

SECTION 5 ADJUSTMENT PROCEDURE

5-1 PREPARATION

REQUIRED TEST EQUIPMENTS

EQUIPMENT	GRADE AND RANGE	EQUIPMENT	GRADE AND RANGE
Frequency Counter	Frequency range : 0.1–30 MHz Frequency accuracy : ±1 ppm or better Sensitivity : 100 mV or better	Standard Signal Generator (SSG)	Frequency range : 0.1–1500 MHz Output level : 0.1 µV to 32 mV (–127 to –17 dBm) Output impedance : 50 Ω

CAUTION!: BACK UP the originally programmed memory data in the transceiver before starting adjustment. When the adjustment is finished, the memory data may be cleared.

ENTERING ADJUSTMENT MODE

① Connect the stereo plug (“clone–GND“ connected) to the [SP] jack.

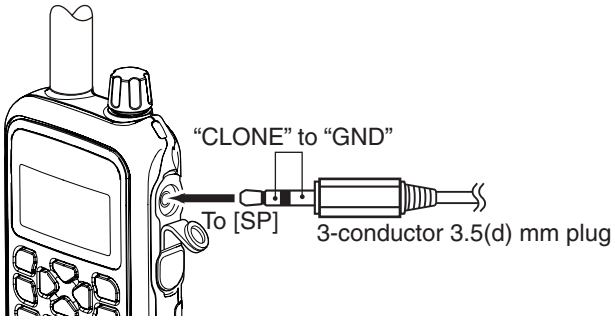

② Push and hold **[▲]**, **[▼]**, **[8]** and **[SEARCH]** keys, turn the power ON.
Then the function display shows the adjustment item and adjustment frequency as below.

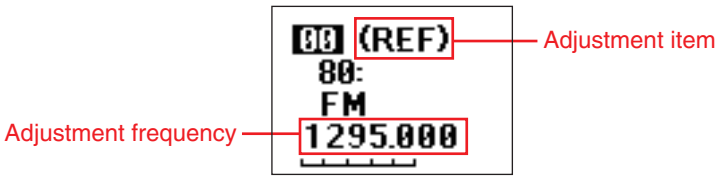

KEY ASSIGNMENT FOR ADJUSTMENT MODE

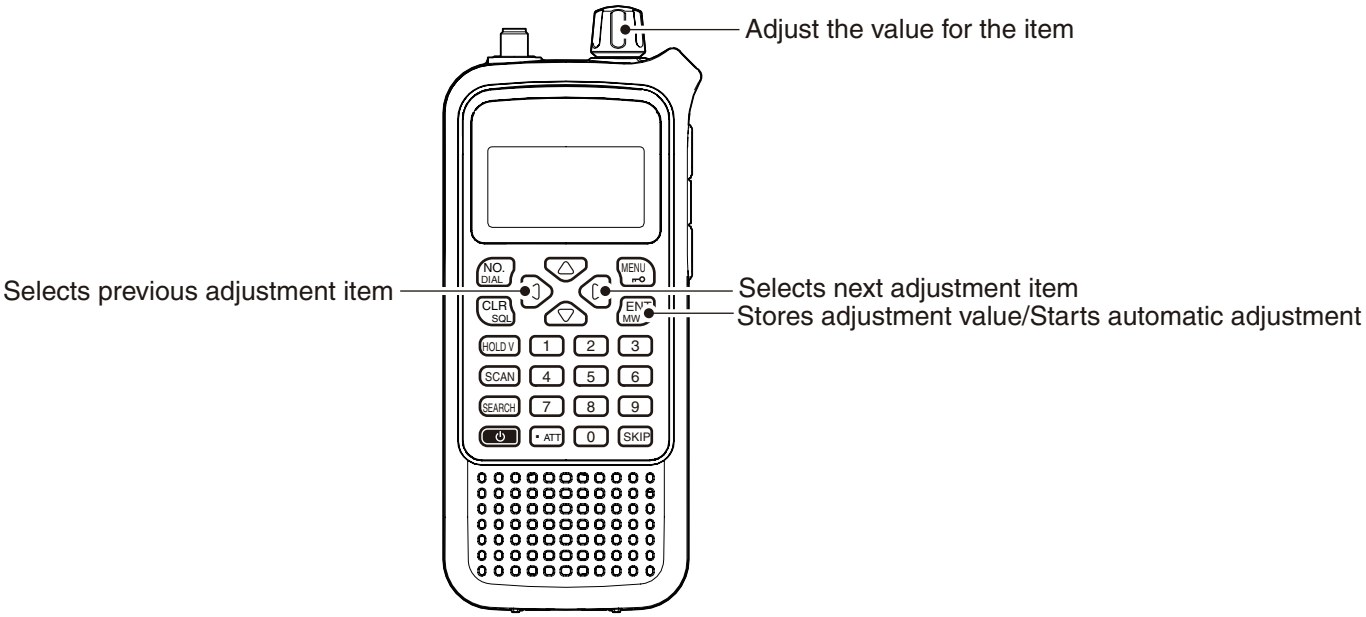

QUITING ADJUSTMENT MODE

• Turn the power OFF, then push and hold **[▲]**, **[▼]**, **[8]**, **[CLR SQL]** and **[ENT MW]** keys, turn the power ON.

ManualsPlus.com

5-2 ADJUSTMENTS

ADJUSTMENT		DISPLAYED ITEM	OPERATION	VALUE
REFERENCE FREQUENCY	1	**[REF]**	1) Remove the front panel and LOGIC UNIT to expose the MAIN UNIT. (Refer to the **DISASSEMBLY INSTRUCTION**) 2) Connect a Frequency Counter to the **CP6** on the **MAIN UNIT** through a thin coaxial cable as below. 3) Adjust the frequency using [DIAL] then push [ENT MW] key.	19.2000 MHz ±3 ppm

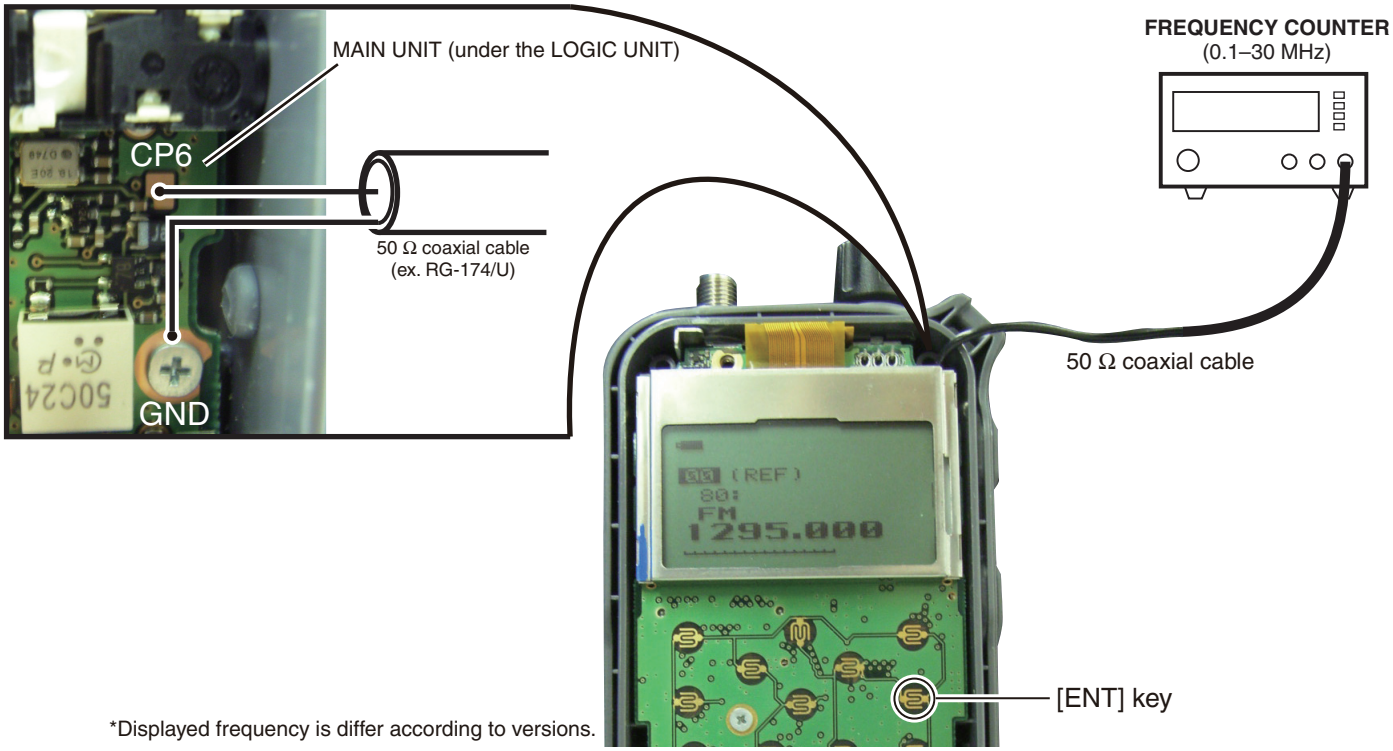

*Displayed frequency is differ according to versions.

ADJUSTMENT		DISPLAYED ITEM	OPERATION	VALUE
BAR ANTENNA SENSITIVITY (Low MF)	1	**[ANL]**	1) Inductive coupple an SSG to the internal AM bar anttena. 2) Set the SSG as; Frequency : (Displayed on the function display) Modulation : 1 kHz Deviation : 30% (AM) Level : –20 dBm 3) Push [ENT MW] key.	(Automatic adjustment)
(High MF)	2	**[ANH]**	1) Inductive coupple an SSG to the internal AM bar anttena. 2) Set the SSG as; Frequency : (Displayed on the function display) Modulation : 1 kHz Deviation : 30% (AM) Level : –20 dBm 3) Push [ENT MW] key.	

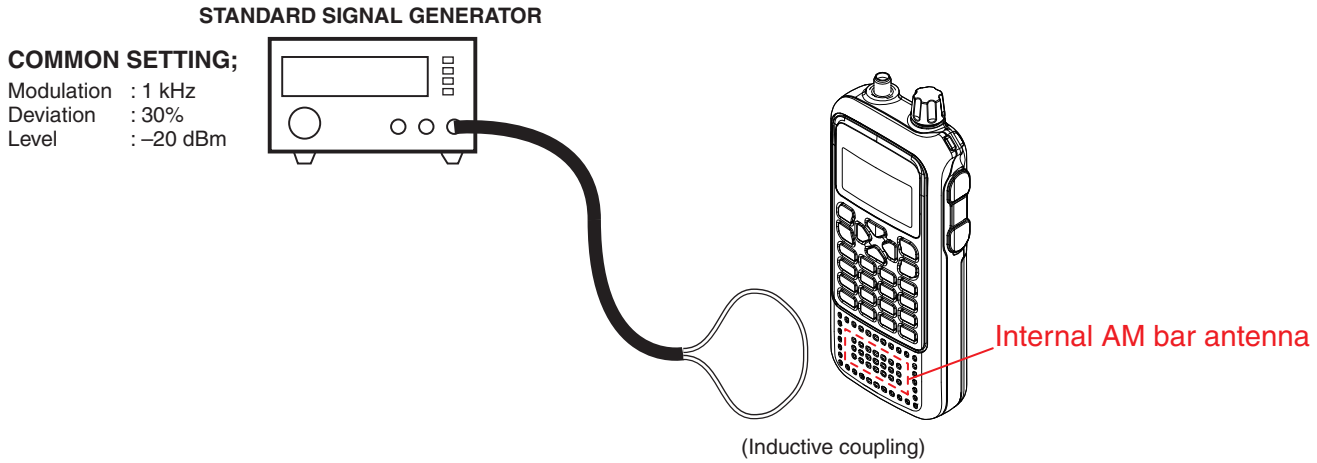

ManualsPlus.com

ADJUSTMENT		DISPLAYED ITEM	OPERATION	VALUE
SENSITIVITY -MF band- (Preparation)	1	–	• Connect an SSG to the antenna connector, and set it as; Frequency : (Displayed on the function display) Modulation : 1 kHz Deviation : 3.5 kHz (FM) Level : –5 dBμ	(Automatic adjustment)
(Band high)	2	**[TRL]**	1) Set the SSG as; Frequency : (Displayed on the function display) 2) Push [ENT MW] key.	
(Band low)	3	**[TRH]**	1) Set the SSG as; Frequency : (Displayed on the function display) 2) Push [ENT MW] key.	
-Low VHF band- (Band low)	4	**[TRL]**	1) Set the SSG as; Frequency : (Displayed on the function display) 2) Push [ENT MW] key.	
(Band center)	5	**[TRM]**	1) Set the SSG as; Frequency : (Displayed on the function display) 2) Push [ENT MW] key.	
(Band high)	6	**[TRH]**	1) Set the SSG as; Frequency : (Displayed on the function display) 2) Push [ENT MW] key.	
-High VHF band- (Band low)	7	**[TRL]**	1) Set the SSG as; Frequency : (Displayed on the function display) 2) Push [ENT MW] key.	
-High VHF band- (Band center)	8	**[TRM]**	1) Set the SSG as; Frequency : (Displayed on the function display) 2) Push [ENT MW] key.	
-High VHF band- (Bandhigh)	9	**[TRH]**	1) Set the SSG as; Frequency : (Displayed on the function display) 2) Push [ENT MW] key.	
-Low UHF band- (Band low)	10	**[TRL]**	1) Set the SSG as; Frequency : (Displayed on the function display) 2) Push [ENT MW] key.	
-Low UHF band- (Band center)	11	**[TRM]**	1) Set the SSG as; Frequency : (Displayed on the function display) 2) Push [ENT MW] key.	
-Low UHF band- (Bandhigh)	12	**[TRH]**	1) Set the SSG as; Frequency : (Displayed on the function display) 2) Push [ENT MW] key.	
-High UHF band- (Band low)	13	**[TRL]**	1) Set the SSG as; Frequency : (Displayed on the function display) 2) Push [ENT MW] key.	
-High UHF band- (Band center)	14	**[TRM]**	1) Set the SSG as; Frequency : (Displayed on the function display) 2) Push [ENT MW] key.	
-High UHF band- (Bandhigh)	15	**[TRH]**	1) Set the SSG as; Frequency : (Displayed on the function display) 2) Push [ENT MW] key.	

STANDARD SIGNAL GENERATOR
(0.3–1500 MHz)

COMMON SETTING;
Modulation : 1 kHz
Deviation : 3.5 kHz

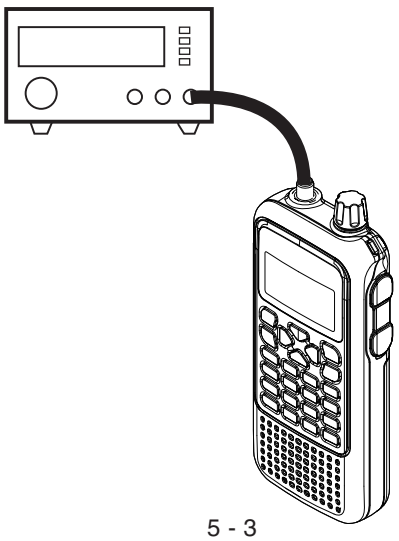

ManualsPlus.com

ADJUSTMENT		DISPLAYED ITEM	OPERATION	VALUE
S-METER CURVE -145 MHz- (Preparation)	1	–	• Connect an SSG to the antenna connector and set it as; Modulation : 1 kHz Deviation : 3.5 kHz (FM)	–
(S0 level)	2	**[S0]**	1) Set the SSG as; Frequency : (Displayed on the function display) Level : –9 dBμ 2) Push [ENT MW] key.	(Automatic adjustment)
(S3 level)	3	**[S3]**	1) Set the SSG as; Frequency : (Displayed on the function display) Level : –5 dBμ 2) Push [ENT MW] key.	
(Full scale)	4	**[SF]**	1) Set the SSG as; Frequency : (Displayed on the function display) Level : +3 dBμ 2) Push [ENT MW] key.	
S-METER CURVE -83 MHz- (Preparation)	1	–	• Connect an SSG to the antenna connector and set it as; Modulation : 1 kHz Deviation : 52.5 kHz (WFM)	–
(S0 level)	2	**[S0]**	1) Set the SSG as; Frequency : (Displayed on the function display) Level : 0 dBμ 2) Push [ENT MW] key.	(Automatic adjustment)
(S3 level)	3	**[S3]**	1) Set the SSG as; Frequency : (Displayed on the function display) Level : +3 dBμ 2) Push [ENT MW] key.	
(Full scale)	4	**[SF]**	1) Set the SSG as; Frequency : (Displayed on the function display) Level : +9 dBμ 2) Push [ENT MW] key.	

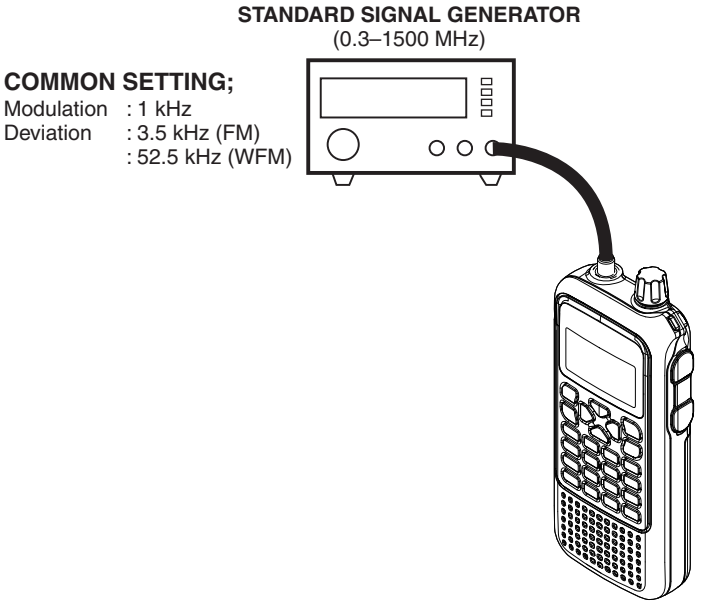

ManualsPlus.com

ADJUSTMENT		DISPLAYED ITEM	OPERATION	VALUE
S-METER (Preparation)	**1**	–	• Connect an SSG to the antenna connector and set it as; Modulation : 1 kHz	–
-MF band- (FM:S3 level)	**2**	**[FS3]**	1) Set the SSG as; Frequency : (Displayed on the function display) Deviation : 3.5 kHz (FM) Level : 0 dBμ 2) Push [ENT MW] key.	(Automatic adjustment)
-MF band- (WFM:S0 level)	**3**	**[WS0]**	1) Set the SSG as; Frequency : (Displayed on the function display) Deviation : 52.5 kHz (WFM) Level : 3 dBμ 2) Push [ENT MW] key.	
-14 MHz band- (FM:S3 level)	**4**	**[FS3]**	1) Set the SSG as; Frequency : (Displayed on the function display) Deviation : 3.5 kHz (FM) Level : –5 dBμ 2) Push [ENT MW] key.	
-14 MHz band- (WFM:S0 level)	**5**	**[WS0]**	1) Set the SSG as; Frequency : (Displayed on the function display) Deviation : 52.5 kHz (WFM) Level : –2 dBμ 2) Push [ENT MW] key.	
-51 MHz band- (FM:S3 level)	**6**	**[FS3]**	1) Set the SSG as; Frequency : (Displayed on the function display) Deviation : 3.5 kHz (FM) Level : –5 dBμ 2) Push [ENT MW] key.	
-51 MHz band- (WFM:S0 level)	**7**	**[WS0]**	1) Set the SSG as; Frequency : (Displayed on the function display) Deviation : 52.5 kHz (WFM) Level : –2 dBμ 2) Push [ENT MW] key.	
-83 MHz band- (FM:S3 level)	**8**	**[FS3]**	1) Set the SSG as; Frequency : (Displayed on the function display) Deviation : 3.5 kHz (FM) Level : –5 dBμ 2) Push [ENT MW] key.	
-145 MHz band- (WFM:S0 level)	**9**	**[WS0]**	1) Set the SSG as; Frequency : (Displayed on the function display) Deviation : 52.5 kHz (WFM) Level : –2 dBμ 2) Push [ENT MW] key.	

STANDARD SIGNAL GENERATOR
(0.3–1500 MHz)

COMMON SETTING;
Modulation : 1 kHz
Deviation : 3.5 kHz (FM)
: 52.5 kHz (WFM)

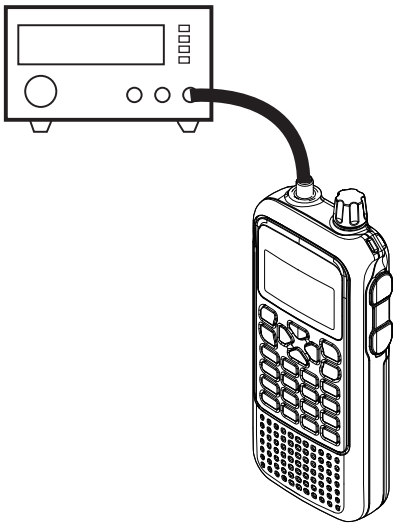

ManualsPlus.com

ADJUSTMENT		DISPLAYED ITEM	OPERATION	VALUE
-200 MHz band-(FM:S3 level)	**10**	**[FS3]**	1) Set the SSG as; Frequency : (Displayed on the function display) Deviation : 3.5 kHz (FM) Level : –5 dBμ 2) Push [ENT MW] key.	(Automatic adjustment)
-200 MHz band-(WFM:S0 level)	**11**	**[WS0]**	1) Set the SSG as; Frequency : (Displayed on the function display) Deviation : 52.5 kHz (WFM) Level : +4 dBμ 2) Push [ENT MW] key.	
-435 MHz band-(FM:S3 level)	**12**	**[FS3]**	1) Set the SSG as; Frequency : (Displayed on the function display) Deviation : 3.5 kHz (FM) Level : –5 dBμ 2) Push [ENT MW] key.	
-435 MHz band-(WFM:S0 level)	**13**	**[WS0]**	1) Set the SSG as; Frequency : (Displayed on the function display) Deviation : 52.5 kHz (WFM) Level : –2 dBμ 2) Push [ENT MW] key.	
-650 MHz band-(FM:S3 level)	**14**	**[FS3]**	1) Set the SSG as; Frequency : (Displayed on the function display) Deviation : 3.5 kHz (FM) Level : –5 dBμ 2) Push [ENT MW] key.	
-650 MHz band-(WFM:S0 level)	**15**	**[WS0]**	1) Set the SSG as; Frequency : (Displayed on the function display) Deviation : 52.5 kHz (WFM) Level : –2 dBμ 2) Push [ENT MW] key.	
-1280 MHz band-(FM:S3 level)	**16**	**[FS3]**	1) Set the SSG as; Frequency : (Displayed on the function display) Deviation : 3.5 kHz (FM) Level : +4 dBμ 2) Push [ENT MW] key.	
-1280 MHz band-(WFM:S0 level)	**17**	**[WS0]**	1) Set the SSG as; Frequency : (Displayed on the function display) Deviation : 52.5 kHz (WFM) Level : +16 dBμ 2) Push [ENT MW] key.	

STANDARD SIGNAL GENERATOR
(0.3–1500 MHz)

COMMON SETTING;
Modulation : 1 kHz
Deviation : 3.5 kHz (FM)
: 52.5 kHz (WFM)

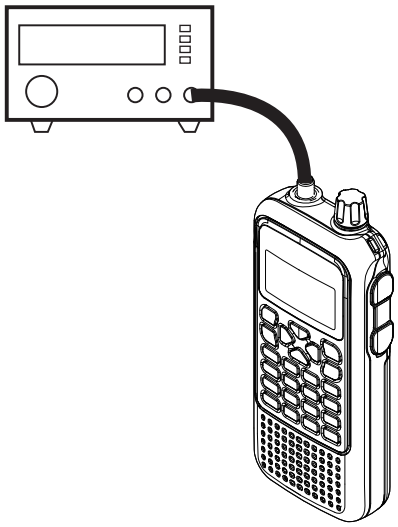

ManualsPlus.com

SECTION 6 PARTS LIST

[MAIN UNIT]

REF NO.	PARTS NO.	DESCRIPTION		M.	H/V LOCATION
IC1	1110005180	S.IC	UPC2746TB-E3	B	9.4/20.9
IC5	1110005230	S.IC	UPC2757TB-E3	B	15.2/19.4
IC8	1110005230	S.IC	UPC2757TB-E3	B	29.6/21.7
IC9	1130009981	S.IC	TC7W53FK(TE85L,F)	B	24/4.3
IC13	1110003201	S.IC	TA31136FNG(EL)	B	38.1/15.8
Q2	1530003990	S.TRA	2SC4738-BL(TE85L,F)	T	17.9/45
Q3	1590001660	S.TRA	XP4312(TX)	T	21.7/43.2
Q5	1530003810	S.TRA	2SC5008-T1	B	14/30.1
Q6	1530003781	S.TRA	2SC5624VH-TL-E	B	9.8/27.8
Q7	1530003611	S.TRA	FH102-TR-E	B	22.7/35.3
Q11	1590001680	S.TRA	XP1110(TX)	B	31.8/38.7
Q12	1530003260	S.TRA	2SC5006-T1	B	28.4/27.6
Q17	1590001810	S.TRA	XP1113(TX)	B	31.8/36.2
Q18	1590001810	S.TRA	XP1113(TX)	B	3.2/16.9
Q19	1590001810	S.TRA	XP1113(TX)	B	5.7/16.9
Q23	1590003250	S.TRA	UNR9115J-(TX)	B	29/11.4
Q25	1590001190	S.TRA	XP6501-(TX).AB	B	27.5/9.2
Q26	1590001190	S.TRA	XP6501-(TX).AB	B	32.3/8.5
Q31	1530003260	S.TRA	2SC5006-T1	B	43.2/22.7
Q36	1530003260	S.TRA	2SC5006-T1	T	39/24.3
Q37	1590002010	S.TRA	XP1114(TX)	B	28.9/15.8
Q38	1590002010	S.TRA	XP1114(TX)	T	41.3/21.1
Q39	1590003290	S.TRA	UNR9213J-(TX)	B	29/13.4
Q40	1590003290	S.TRA	UNR9213J-(TX)	T	43.7/21.2
Q41	1530003260	S.TRA	2SC5006-T1	B	2.2/32.6
Q42	1530003260	S.TRA	2SC5006-T1	B	1.3/30.3
Q43	1510001110	S.TRA	2SA1577T106R	B	11.1/16.6
Q44	1530003990	S.TRA	2SC4738-BL(TE85L,F)	B	12.4/13.5
Q45	1590003250	S.TRA	UNR9115J-(TX)	B	40.4/38
Q46	1590003290	S.TRA	UNR9213J-(TX)	B	29.8/5.2
Q47	1590003230	S.TRA	UNR9113J-(TX)	T	21.2/39
D1	1720000241	S.DIO	1SV172(TE85R,F)	T	14.8/39.5
D2	1790001260	S.DIO	MA2S077-(TX)	T	17.8/38.9
D4	1790001621	S.DIO	1SV308(TPL3,F)	B	25.5/39.6
D5	1790001621	S.DIO	1SV308(TPL3,F)	T	23.7/38.2
D7	1790001621	S.DIO	1SV308(TPL3,F)	B	16.5/39.4
D8	1790001621	S.DIO	1SV308(TPL3,F)	B	14.5/38.4
D9	1790001621	S.DIO	1SV308(TPL3,F)	B	17.6/37.7
D10	1790001621	S.DIO	1SV308(TPL3,F)	B	16.4/37.7
D12	1750000721	S.VAR	HVC375BTRF-E	B	18.8/33.1
D13	1750000721	S.VAR	HVC375BTRF-E	B	18/31.4
D14	1790001240	S.DIO	MA2S728-(TX)	B	25.5/34.1
D15	1790001240	S.DIO	MA2S728-(TX)	B	26.8/34.1
D18	1790001240	S.DIO	MA2S728-(TX)	B	5.3/31.1
D19	1790001240	S.DIO	MA2S728-(TX)	B	5.3/33.6
D20	1790001240	S.DIO	MA2S728-(TX)	B	12.1/31.2
D21	1790001240	S.DIO	MA2S728-(TX)	B	12.1/32.4
D22	1790001240	S.DIO	MA2S728-(TX)	B	6.5/28.8
D23	1790001240	S.DIO	MA2S728-(TX)	B	6.5/31.3
D25	1750000721	S.VAR	HVC375BTRF-E	B	15.6/27.6
D26	1750000721	S.VAR	HVC375BTRF-E	B	17.4/28.4
D27	1790001621	S.DIO	1SV308(TPL3,F)	B	30.8/34.3
D28	1790001621	S.DIO	1SV308(TPL3,F)	B	28.1/34.3
D29	1790001621	S.DIO	1SV308(TPL3,F)	T	28.4/35.2
D31	1720000840	S.VAR	HVD328CKRU-E	B	20.5/30
D32	1750000711	S.VAR	HVC350BTRF-E	B	2.4/27.3
D33	1790001240	S.DIO	MA2S728-(TX)	B	25.5/30.9
D34	1790001240	S.DIO	MA2S728-(TX)	B	26.8/30.9
D35	1720000840	S.VAR	HVD328CKRU-E	B	22.9/28
D36	1750000711	S.VAR	HVC350BTRF-E	B	3.3/23.1
D37	1790001621	S.DIO	1SV308(TPL3,F)	B	25.7/24
D38	1790001621	S.DIO	1SV308(TPL3,F)	B	23/24.2
D40	1790001621	S.DIO	1SV308(TPL3,F)	B	3.3/21
D41	1790001621	S.DIO	1SV308(TPL3,F)	B	12.3/24
D42	1790001621	S.DIO	1SV308(TPL3,F)	B	9.1/24
D44	1750001070	S.DIO	DAN235ETL	B	32.7/25
D45	1790001240	S.DIO	MA2S728-(TX)	B	32.3/6.1
D47	1750001070	S.DIO	DAN235ETL	B	38.3/8.3
D48	1750001070	S.DIO	DAN235ETL	B	42.3/8.8
D49	1750001070	S.DIO	DAN235ETL	B	44.4/27.5
D50	1790001240	S.DIO	MA2S728-(TX)	B	41.9/24.3
D51	1790001260	S.DIO	MA2S077-(TX)	B	21.1/31.2
D52	1790001260	S.DIO	MA2S077-(TX)	B	20.2/25.5
D53	1720000821	S.VAR	SVC347S/T-TL-E	T	30.6/39.9
D54	1790001250	S.DIO	MA2S111-(TX)	B	13/16.7
D55	1790001240	S.DIO	MA2S728-(TX)	B	14.8/14
D56	1790001621	S.DIO	1SV308(TPL3,F)	B	28.8/40.7
D57	1790001260	S.DIO	MA2S077-(TX)	B	21.7/42.1
D58	1790001260	S.DIO	MA2S077-(TX)	B	24.7/27.6
FI1	2040001190	S.SAW	EFCH429MKQP1	B	22.4/20.1
FI2	2010002280	S.MON	19S15A 19.650 MHz (FL-293)	B	37.3/25.4
FI3	2020002170	S.CER	ELFY450E	T	29.5/6.3
X1	6050012790	S.XTA	CR-869 DSA321SC 19.2MHZ	T	37.4/27.1
X3	6070000191	S.DIS	CDBKB450KCAY24-R0	T	38.6/16.1
L1	6200010850	S.COI	LQW18AN22NG00D	B	7.1/37.6
L2	6200010630	S.COI	LQW18AN8N2D00D	B	12/35.7
L3	6200007001	S.COI	ELJRE 82NGFA	B	22.1/38.1
L4	6200010850	S.COI	LQW18AN22NG00D	B	4.4/37

[MAIN UNIT]

REF NO.	PARTS NO.	DESCRIPTION		M.	H/V LOCATION
L5	6200010130	S.COI	LQW18AN6N8C00D	B	8.4/34.9
L7	6200009220	S.COI	LQW18AN15NG00D	B	2.6/36.1
L8	6200010120	S.COI	LQW18AN5N6C00D	B	9.1/33
L10	6200010850	S.COI	LQW18AN22NG00D	B	1.8/34.3
L11	6200005601	S.COI	ELJRE 3N3ZFA	B	18.1/35
L12	6200005631	S.COI	ELJRE 5N6ZFA	B	17.6/33.1
L13	6200010130	S.COI	LQW18AN6N8C00D	B	9.1/30.4
L15	6200010130	S.COI	LQW18AN6N8C00D	B	9.9/25.8
L16	6200009280	S.COI	LQW18AN27NG00D	B	23.5/32.4
L18	6200005611	S.COI	ELJRE 3N9ZFA	B	12.3/29.3
L19	6200005591	S.COI	ELJRE 2N7ZFA	B	13.1/27.4
L20	6200009280	S.COI	LQW18AN27NG00D	B	22.9/26.9
L21	6200002041	S.COI	NLV25T-101J	B	28.6/24.3
L22	6200005641	S.COI	ELJRE 6N8ZFA	B	12.8/20.8
L23	6200005701	S.COI	ELJRE 22NGFA	B	17.9/18.4
L24	6200005721	S.COI	ELJRE 33NGFA	B	27.8/19.1
L25	6200002971	S.COI	NLV32T-121J	T	33.5/13.9
L29	6200013520	S.COI	NLFC322522T-151K-PF	T	26.8/40.1
L31	6200005051	S.COI	NLV25T-330J	T	34.7/39.2
L33	6200004720	S.COI	MLF1608D R10K-T	B	26.3/37.8
L34	6200004600	S.COI	MLF1608D R15K-T	B	28.1/31.7
L36	6200005651	S.COI	ELJRE 8N2ZFA	B	2.4/28.5
L38	6200004600	S.COI	MLF1608D R15K-T	B	29.3/30.1
L40	6200008570	S.COI	LQW2BHN6N8D03L	B	3.7/24.8
L41	6200007170	S.COI	MLF1608A 3R3K-T	B	35.9/22.7
L43	6200007170	S.COI	MLF1608A 3R3K-T	B	41.5/22.5
L44	6200006380	S.COI	ELJFC 150K	B	33.1/19.6
L50	6200009220	S.COI	LQW18AN15NG00D	B	8.9/36.8
L51	6200006960	S.COI	MLF1608A 2R7K-T	B	42/27
L52	6200011670	S.COI	LQW18AN82NG00D	B	20.9/32.4
L53	6200011670	S.COI	LQW18AN82NG00D	B	20.2/26.8
L54	6200010850	S.COI	LQW18AN22NG00D	B	10.1/36.6
L55	6200009250	S.COI	LQW18ANR22G00D	B	12.9/36.9
L56	6200009250	S.COI	LQW18ANR22G00D	B	15.2/40.6
L60	6200005641	S.COI	ELJRE 6N8ZFA	B	15.5/32.2
L61	6200011770	S.COI	LQW18ANR10G00D	B	18.4/43.9
L62	6200009070	S.COI	LQW18AN18NG00D	B	21.3/40
L63	6200011770	S.COI	LQW18ANR10G00D	B	19.8/43.9
L64	6200011770	S.COI	LQW18ANR10G00D	B	25.9/27.6
R1	7030005120	S.RES	ERJ2GEJ 102 X (1K)	B	13.3/40.3
R2	7030005570	S.RES	ERJ2GEJ 820 X (82)	T	17/40.4
R3	7030007280	S.RES	ERJ2GEJ 331 X (330)	T	18.2/39.9
R4	7030005570	S.RES	ERJ2GEJ 820 X (82)	T	18.2/40.8
R5	7030009140	S.RES	ERJ2GEJ 272 X (2.7K)	T	20.6/40.4
R11	7030007290	S.RES	ERJ2GEJ 222 X (2.2K)	B	18.6/39.4
R13	7030007290	S.RES	ERJ2GEJ 222 X (2.2K)	B	16.4/35.4
R14	7030007290	S.RES	ERJ2GEJ 222 X (2.2K)	B	15.5/35.4
R15	7030005030	S.RES	ERJ2GEJ 152 X (1.5K)	T	19.7/41.8
R16	7030005050	S.RES	ERJ2GEJ 103 X (10K)	T	19.7/43.6
R22	7030005090	S.RES	ERJ2GEJ 104 X (100K)	B	18.8/30
R24	7030005090	S.RES	ERJ2GEJ 104 X (100K)	T	21.3/41.3
R25	7030005120	S.RES	ERJ2GEJ 102 X (1K)	T	26.3/37.2
R26	7030005290	S.RES	ERJ2GEJ 682 X (6.8K)	B	23.7/37.8
R27	7030007340	S.RES	ERJ2GEJ 153 X (15K)	B	26/35.8
R28	7030005290	S.RES	ERJ2GEJ 682 X (6.8K)	B	0.6/32.8
R29	7030007340	S.RES	ERJ2GEJ 153 X (15K)	B	4.2/28.3
R31	7030007280	S.RES	ERJ2GEJ 331 X (330)	B	20.7/37.1
R32	7030007280	S.RES	ERJ2GEJ 331 X (330)	B	3.9/34.1
R34	7030005240	S.RES	ERJ2GEJ 473 X (47K)	B	14.2/31.5
R35	7030008010	S.RES	ERJ2GEJ 123 X (12K)	B	14.2/32.4
R36	7030005240	S.RES	ERJ2GEJ 473 X (47K)	B	7.8/29.6
R37	7030008010	S.RES	ERJ2GEJ 123 X (12K)	B	7.8/28.7
R38	7030005040	S.RES	ERJ2GEJ 472 X (4.7K)	B	20.7/38.9
R41	7030005040	S.RES	ERJ2GEJ 472 X (4.7K)	B	2.7/29.9
R43	7030005120	S.RES	ERJ2GEJ 102 X (1K)	B	27.8/38.5
R44	7030005120	S.RES	ERJ2GEJ 102 X (1K)	T	28.4/36.8
R45	7030005710	S.RES	ERJ2GEJ 121 X (120)	B	16/29.6
R46	7030007280	S.RES	ERJ2GEJ 331 X (330)	B	7.8/26
R49	7030005090	S.RES	ERJ2GEJ 104 X (100K)	B	15.8/28.6
R52	7030005090	S.RES	ERJ2GEJ 104 X (100K)	B	18.5/27.9
R54	7030005120	S.RES	ERJ2GEJ 102 X (1K)	B	22.3/33.5
R57	7030007290	S.RES	ERJ2GEJ 222 X (2.2K)	B	33/34.3
R60	7030007300	S.RES	ERJ2GEJ 332 X (3.3K)	B	30/35.6
R61	7030005090	S.RES	ERJ2GEJ 104 X (100K)	B	22.1/29.9
R62	7030005240	S.RES	ERJ2GEJ 473 X (47K)	B	00.6/25.9
R65	7030005050	S.RES	ERJ2GEJ 103 X (10K)	B	27/29.3
R66	7030005240	S.RES	ERJ2GEJ 473 X (47K)	B	27/28.1
R67	7030004980	S.RES	ERJ2GEJ 101 X (100)	B	30.2/27.3
R68	7030005090	S.RES	ERJ2GEJ 104 X (100K)	B	21.4/28.2
R69	7030005240	S.RES	ERJ2GEJ 473 X (47K)	B	0.6/24.3
R73	7030005580	S.RES	ERJ2GEJ 560 X (56)	B	22.5/25.3
R75	7030007290	S.RES	ERJ2GEJ 222 X (2.2K)	B	2.9/22.1
R76	7030007290	S.RES	ERJ2GEJ 222 X (2.2K)	B	13.3/26.1
R77	7030007290	S.RES	ERJ2GEJ 222 X (2.2K)	B	7.8/24.2
R78	7030005040	S.RES	ERJ2GEJ 472 X (4.7K)	B	10.5/22.9
R85	7030005710	S.RES	ERJ2GEJ 121 X (120)	B	15.3/21.4
R86	7030005570	S.RES	ERJ2GEJ 820 X (82)	B	11.5/19.4
R87	7030004980	S.RES	ERJ2GEJ 101 X (100)	B	11.5/18.5
R89	7030005570	S.RES	ERJ2GEJ 820 X (82)	B	12.7/18.7
R97	7030005300	S.RES	ERJ2GEJ 150 X (15)	B	15.3/16.4
R98	7030007270	S.RES	ERJ2GEJ 151 X (150)	B	16.5/16
R101	7030005700	S.RES	ERJ2GEJ 274 X (270K)	T	40.2/28
R108	7030007340	S.RES	ERJ2GEJ 153 X (15K)	B	27.5/5.6
R109	7030004980	S.RES	ERJ2GEJ 101 X (100)	B	27.4/11.4
R110	7030005290	S.RES	ERJ2GEJ 682 X (6.8K)	T	35.6/24.7
R113	7030005230	S.RES	ERJ2GEJ 334 X (330K)	B	25.7/8.9

M.=Mounted side (T: Mounted on the Top side, B: Mounted on the Bottom side)
S.=Surface mount

ManualsPlus.com

[MAIN UNIT]

REF NO.	PARTS NO.	DESCRIPTION	M.	H/V LOCATION
R114	7030005220	S.RES ERJ2GEJ 223 X (22K)	B	26.6/7.2
R118	7030005160	S.RES ERJ2GEJ 105 X (1M)	B	23.9/8.9
R126	7030005240	S.RES ERJ2GEJ 473 X (47K)	B	30.5/10.5
R128	7030005030	S.RES ERJ2GEJ 152 X (1.5K)	B	29.4/8.8
R129	7030005090	S.RES ERJ2GEJ 104 X (100K)	B	30.3/8.8
R138	7030007300	S.RES ERJ2GEJ 332 X (3.3K)	B	29.5/7.2
R141	7030005040	S.RES ERJ2GEJ 472 X (4.7K)	B	31.1/25.4
R142	7030005100	S.RES ERJ2GEJ 154 X (150K)	B	33.3/6.3
R143	7030005100	S.RES ERJ2GEJ 154 X (150K)	B	31.2/5.7
R148	7030005040	S.RES ERJ2GEJ 472 X (4.7K)	B	32.9/23.5
R149	7030010040	S.RES ERJ2GEJ-JPW	B	33.8/22.6
R150	7030003290	S.RES ERJ3GEYJ 560 V (56) [EUR-01]	B	33.4/27.4
	7030003290	S.RES ERJ3GEYJ 560 V (56) [UK-01]		
	7030003290	S.RES ERJ3GEYJ 560 V (56) [EXP-01]		
	7030003290	S.RES ERJ3GEYJ 560 V (56) [CHN-01]		
	7030003290	S.RES ERJ3GEYJ 560 V (56) [CAN-01]		
R154	7030005040	S.RES ERJ2GEJ 472 X (4.7K)	B	39.7/7.4
R157	7030005050	S.RES ERJ2GEJ 103 X (10K)	B	39.7/6.5
R162	7030007340	S.RES ERJ2GEJ 153 X (15K)	T	30.1/13.2
R167	7030010040	S.RES ERJ2GEJ-JPW	B	43.2/25.9
R168	7030005050	S.RES ERJ2GEJ 103 X (10K)	B	41.7/7.4
R169	7030005040	S.RES ERJ2GEJ 472 X (4.7K)	B	44.2/9.3
R172	7030005040	S.RES ERJ2GEJ 472 X (4.7K)	B	44.5/29.2
R173	7030005050	S.RES ERJ2GEJ 103 X (10K)	B	32.3/27.8
R179	7030005040	S.RES ERJ2GEJ 472 X (4.7K)	B	40.3/8.8
R181	7030004980	S.RES ERJ2GEJ 101 X (100)	B	45.8/25.7
R184	7030005090	S.RES ERJ2GEJ 104 X (100K)	B	34.5/13.9
R185	7030005030	S.RES ERJ2GEJ 152 X (1.5K)	B	34.5/15.7
R187	7030005110	S.RES ERJ2GEJ 224 X (220K)	B	44.5/24.5
R188	7030007340	S.RES ERJ2GEJ 153 X (15K)	B	43.6/24.5
R189	7030005030	S.RES ERJ2GEJ 152 X (1.5K)	B	39.2/11.5
R190	7030005240	S.RES ERJ2GEJ 473 X (47K)	B	32.9/15.7
R194	7030005120	S.RES ERJ2GEJ 102 X (1K)	B	44.2/20.4
R195	7030007340	S.RES ERJ2GEJ 153 X (15K)	B	31.5/14.5
R196	7030005120	S.RES ERJ2GEJ 102 X (1K)	B	32.2/13.3
R203	7030009160	S.RES ERJ2GEJ 181 X (180)	B	41.3/19.8
R204	7030005000	S.RES ERJ2GEJ 471 X (470)	B	34.5/16.6
R210	7030005240	S.RES ERJ2GEJ 473 X (47K)	B	41.4/16.5
R213	7030008010	S.RES ERJ2GEJ 123 X (12K)	T	40.9/23.9
R214	7030005010	S.RES ERJ2GEJ 681 X (680)	T	36.8/20.4
R215	7030004990	S.RES ERJ2GEJ 221 X (220)	B	36.6/20.5
R216	7030007310	S.RES ERJ2GEJ 155 X (1.5M)	T	40.5/25.1
R218	7030005120	S.RES ERJ2GEJ 102 X (1K)	T	35.6/23.1
R221	7030007280	S.RES ERJ2GEJ 331 X (330)	B	28.2/26
R222	7030007290	S.RES ERJ2GEJ 222 X (2.2K)	B	23/29.3
R223	7030007290	S.RES ERJ2GEJ 222 X (2.2K)	B	20.4/24.5
R224	7030005090	S.RES ERJ2GEJ 104 X (100K)	T	27.7/38.1
R225	7030005720	S.RES ERJ2GEJ 563 X (56K)	B	27.5/2.6
R226	7030010040	S.RES ERJ2GEJ-JPW	B	4/32.3
R227	7030010040	S.RES ERJ2GEJ-JPW	B	36.7/6.9
R228	7030005060	S.RES ERJ2GEJ 333 X (33K)	B	7.8/41.6
R229	7030005040	S.RES ERJ2GEJ 472 X (4.7K)	B	14.9/15.1
R230	7030007290	S.RES ERJ2GEJ 222 X (2.2K)	B	12/11.8
R232	7030007290	S.RES ERJ2GEJ 222 X (2.2K)	B	38.4/38.9
R233	7030010040	S.RES ERJ2GEJ-JPW	B	36/39.9
R234	7030005120	S.RES ERJ2GEJ 102 X (1K)	B	27.1/40.3
R236	7030005070	S.RES ERJ2GEJ 683 X (68K)	B	12.9/11.8
R237	7030010040	S.RES ERJ2GEJ-JPW	B	41.4/14.8
R238	7030005030	S.RES ERJ2GEJ 152 X (1.5K)	T	18/41.9
R239	7030007250	S.RES ERJ2GEJ 220 X (22)	B	23.9/33.5
R240	7030007290	S.RES ERJ2GEJ 222 X (2.2K)	B	23.2/40.7
R241	7030005040	S.RES ERJ2GEJ 472 X (4.7K)	T	8.9/4.5
R242	7030007290	S.RES ERJ2GEJ 222 X (2.2K)	B	25.9/25.9
R243	7030005090	S.RES ERJ2GEJ 104 X (100K)	T	22.7/37.9
C2	4030016930	S.CER ECJ0EB1A104K	T	13.4/38
C3	4030016930	S.CER ECJ0EB1A104K	T	16.1/38
C4	4030016930	S.CER ECJ0EB1A104K	T	19.4/38.3
C6	4030016930	S.CER ECJ0EB1A104K	T	19.4/40.6
C7	4030017460	S.CER ECJ0EB1E102K	T	17.6/43.1
C8	4030017460	S.CER ECJ0EB1E102K	B	19.5/38.2
C9	4030017460	S.CER ECJ0EB1E102K	B	15.1/37.1
C10	4030017460	S.CER ECJ0EB1E102K	B	14.8/33.9
C11	4030017460	S.CER ECJ0EB1E102K	B	13.2/33.7
C12	4030017460	S.CER ECJ0EB1E102K	T	23.6/41.5
C15	4030017380	S.CER ECJ0EC1H050B	B	9.7/39.1
C16	4030017460	S.CER ECJ0EB1E102K	B	17.7/36
C17	4030016790	S.CER ECJ0EB1C103K	T	18.5/43.1
C18	4030017460	S.CER ECJ0EB1E102K	T	19.9/44.8
C19	4030017360	S.CER ECJ0EC1H030B	B	7.8/36.2
C22	4030017600	S.CER ECJ0EC1H080C	B	14.6/35.4
C23	4030017460	S.CER ECJ0EB1E102K	T	19.7/42.7
C24	4030017460	S.CER ECJ0EB1E102K	B	20.7/38
C25	4030017390	S.CER ECJ0EC1H180J	B	13.7/35.4
C29	4030017350	S.CER ECJ0EC1H020B	B	12.3/34.6
C30	4030016790	S.CER ECJ0EB1C103K	B	20.9/44.2
C31	4030017460	S.CER ECJ0EB1E102K	T	23.6/40.6
C34	4030017590	S.CER ECJ0EC1H070C	B	6.3/36.2
C35	4030017420	S.CER ECJ0EC1H470J	B	10.6/34.6
C37	4030017340	S.CER ECJ0EC1H010B	B	5.1/38.3
C38	4030017360	S.CER ECJ0EC1H030B	B	11.4/33.7
C40	4030017380	S.CER ECJ0EC1H050B	B	3.9/35.9
C41	4030017340	S.CER ECJ0EC1H010B	B	7.7/33.8
C43	4030017340	S.CER ECJ0EC1H010B	B	10.2/33.3
C46	4030017600	S.CER ECJ0EC1H080C	B	3.9/35
C47	4030017350	S.CER ECJ0EC1H020B	B	7.7/32.9
C49	4030016930	S.CER ECJ0EB1A104K	T	25.1/37.7
C51	4030017730	S.CER ECJ0EB1E471K	B	8.1/31.7
C52	4030017420	S.CER ECJ0EC1H470J	T	21.5/45
C61	4030017460	S.CER ECJ0EB1E102K	B	16.6/33.4
C68	4030017460	S.CER ECJ0EB1E102K	B	20.7/36.2
C69	4030017460	S.CER ECJ0EB1E102K	B	3.9/33.2
C70	4030016930	S.CER ECJ0EB1A104K	T	30.5/35.2

[MAIN UNIT]

REF NO.	PARTS NO.	DESCRIPTION	M.	H/V LOCATION
C72	4030016930	S.CER ECJ0EB1A104K	B	29/38.1
C73	4030016930	S.CER ECJ0EB1A104K	T	27.5/36.8
C75	4030017730	S.CER ECJ0EB1E471K	B	16/30.5
C76	4030017730	S.CER ECJ0EB1E471K	B	7.8/26.9
C80	4030017460	S.CER ECJ0EB1E102K	B	20.7/35.3
C81	4030017460	S.CER ECJ0EB1E102K	B	4/30.4
C82	4030017660	S.CER ECJ0EC1H330J	B	27.8/37.6
C83	4030017420	S.CER ECJ0EC1H470J	B	30.7/32.6
C84	4030017390	S.CER ECJ0EC1H180J	B	20.7/34.4
C86	4030017600	S.CER ECJ0EC1H080C	B	3.6/31.4
C87	4030017600	S.CER ECJ0EC1H080C	B	27.3/36.4
C88	4030017610	S.CER ECJ0EC1H090C	B	29.1/32.2
C90	4030017660	S.CER ECJ0EC1H330J	B	28.5/35.9
C91	4030017680	S.CER ECJ0EC1H820J	B	30.7/30.8
C93	4030017460	S.CER ECJ0EB1E102K	B	14.2/28.6
C94	4030017730	S.CER ECJ0EB1E471K	B	7.8/27.8
C96	4030017560	S.CER ECJ0EC1H2R5B	B	10.4/24.7
C98	4030017460	S.CER ECJ0EB1E102K	B	20.7/33.5
C99	4030017460	S.CER ECJ0EB1E102K	B	4/29.5
C100	4030017730	S.CER ECJ0EB1E471K	B	17.6/30
C101	4030017460	S.CER ECJ0EB1E102K	B	7.8/25.1
C102	4030016790	S.CER ECJ0EB1C103K	B	32.5/33.1
C104	4030017360	S.CER ECJ0EC1H030B	B	28.2/29.6
C106	4030017440	S.CER ECJ0EC1H221J	B	23.3/30.5
C107	4030017460	S.CER ECJ0EB1E102K	B	0.6/27.8
C108	4030016930	S.CER ECJ0EB1A104K	B	34.6/34.3
C110	4030017420	S.CER ECJ0EC1H470J	B	30.7/29.3
C113	4030017460	S.CER ECJ0EB1E102K	B	20.2/28.8
C115	4030017460	S.CER ECJ0EB1E102K	B	12.3/26.1
C116	4030017460	S.CER ECJ0EB1E102K	B	5.9/26.8
C117	4030017460	S.CER ECJ0EB1E102K	B	15.2/26.5
C118	4030016930	S.CER ECJ0EB1A104K	B	29.1/33.8
C119	4030017350	S.CER ECJ0EC1H020B	B	23.9/29.3
C120	4030017350	S.CER ECJ0EC1H020B	B	1.6/25.9
C122	4030017440	S.CER ECJ0EC1H221J	B	20.2/27.9
C123	4030017460	S.CER ECJ0EB1E102K	B	1.6/24.3
C124	4030016930	S.CER ECJ0EB1A104K	B	30.2/28.2
C127	4030017460	S.CER ECJ0EB1E102K	B	34.6/39.6
C128	4030017460	S.CER ECJ0EB1E102K	B	34.6/37.8
C129	4030017460	S.CER ECJ0EB1E102K	B	18.1/26
C131	4030017460	S.CER ECJ0EB1E102K	B	4.5/22.1
C132	4030017460	S.CER ECJ0EB1E102K	B	6.5/33.9
C133	4030017660	S.CER ECJ0EC1H330J	B	23.7/25.5
C135	4030017590	S.CER ECJ0EC1H070C	B	1.6/22.7
C136	4030016930	S.CER ECJ0EB1A104K	B	29.8/26
C137	4030017460	S.CER ECJ0EB1E102K	B	34.6/38.7
C138	4030017460	S.CER ECJ0EB1E102K	B	34.6/36.9
C139	4030017460	S.CER ECJ0EB1E102K	T	17.8/12.8
C141	4030016930	S.CER ECJ0EB1A104K	B	8.1/22.9
C142	4030017460	S.CER ECJ0EB1E102K	T	20.9/18.7
C145	4030017460	S.CER ECJ0EB1E102K	B	7.4/16.8
C146	4030017460	S.CER ECJ0EB1E102K	B	2.7/19.2
C147	4030017460	S.CER ECJ0EB1E102K	B	4.9/19.7
C150	4030017460	S.CER ECJ0EB1E102K	B	34.6/35.5
C151	4030017460	S.CER ECJ0EB1E102K	B	3.9/19.7
C152	4030017460	S.CER ECJ0EB1E102K	B	6.4/19.7
C157	4030016930	S.CER ECJ0EB1A104K	B	11.2/21.3
C158	4030016930	S.CER ECJ0EB1A104K	B	10.3/18.9
C162	4030017460	S.CER ECJ0EB1E102K	T	28.1/15.9
C167	4030017420	S.CER ECJ0EC1H470J	T	12.7/19.4
C168	4030017420	S.CER ECJ0EC1H470J	T	12.7/20.3
C172	4030017420	S.CER ECJ0EC1H470J	T	13.2/24.4
C173	4030016930	S.CER ECJ0EB1A104K	B	14.4/21.4
C174	4030017370	S.CER ECJ0EC1H3R5B	B	14.9/17.6
C178	4030017420	S.CER ECJ0EC1H470J	T	14.1/24.4
C181	4030017460	S.CER ECJ0EB1E102K	T	40.2/27.1
C183	4030016790	S.CER ECJ0EB1C103K	B	36/38.3
C187	4030016790	S.CER ECJ0EB1C103K	T	40.2/26.2
C188	4030017460	S.CER ECJ0EB1E102K	B	16.5/17.6
C189	4030017460	S.CER ECJ0EB1E102K	B	30.5/12.4
C190	4030017360	S.CER ECJ0EC1H030B	B	17.4/20.1
C191	4030017040	S.CER ECJ0EB1A333K	B	27.5/7.2
C194	4030016790	S.CER ECJ0EB1C103K	B	25.7/7.2
C201	4030016790	S.CER ECJ0EB1C103K	B	25.6/10.6
C203	4030017460	S.CER ECJ0EB1E102K	B	27.8/22
C206	4030017460	S.CER ECJ0EB1E102K	B	29.2/20
C207	4550007600	S.TAN F920J106MPABMA	B	32.7/10.6
C208	4030017460	S.CER ECJ0EB1E102K	B	24.8/8.9
C217	4030017700	S.CER ECJ0EC1H151J	B	30.4/7.2
C220	4030017460	S.CER ECJ0EB1E102K	B	30.5/19.2
C221	4030017460	S.CER ECJ0EB1E102K	B	34.5/17.5
C223	4030017460	S.CER ECJ0EB1E102K	B	31.1/23.8
C225	4030017460	S.CER ECJ0EB1E102K	B	28.4/7.2
C226	4030017640	S.CER ECJ0EC1H150J	B	34.5/7.2
C228	4030016930	S.CER ECJ0EB1A104K	B	26.6/2.6
C239	4030017460	S.CER ECJ0EB1E102K	B	40.9/6
C242	4030017730	S.CER ECJ0EB1E471K [EUR-01]	B	33.2/29.1
	4030017730	S.CER ECJ0EB1E471K [UK-01]		
	4030017420	S.CER ECJ0EC1H470J [USA-01]		
	4030017730	S.CER ECJ0EB1E471K [EXP-01]		
	4030017730	S.CER ECJ0EB1E471K [CHN-01]		
	4030017730	S.CER ECJ0EB1E471K [CAN-01]		
C244	4030017400	S.CER ECJ0EC1H220J	B	38/22.7
C245	4030017430	S.CER ECJ0EC1H101J	T	31/13.2
C246	4030017430	S.CER ECJ0EC1H101J	T	29.2/13.2
C247	4030016790	S.CER ECJ0EB1C103K	B	38/6.6
C249	4030017430	S.CER ECJ0EC1H101J	T	33.9/11.7
C253	4030016790	S.CER ECJ0EB1C103K	B	41.8/6
C256	4030016930	S.CER ECJ0EB1A104K	B	45.8/9.3
C258	4030016930	S.CER ECJ0EB1A104K	B	45.7/29.7
C259	4030016930	S.CER ECJ0EB1A104K	B	31.6/26.6
C261	4030016930	S.CER ECJ0EB1A104K	B	40.8/10
C262	4030016930	S.CER ECJ0EB1A104K	B	38.5/10
C263	4030016930	S.CER ECJ0EB1A104K	B	37.1/11.1

M.=Mounted side (T: Mounted on the Top side, B: Mounted on the Bottom side)
S.=Surface mount

ManualsPlus.com

[MAIN UNIT]

REF NO.	PARTS NO.	DESCRIPTION	M.	H/V LOCATION
C265	4030016930	S.CER ECJ0EB1A104K	B	42.3/18.1
C266	4030017730	S.CER ECJ0EB1E471K	B	34.5/14.8
C269	4030016790	S.CER ECJ0EB1C103K	B	45.4/24.5
C270	4030017730	S.CER ECJ0EB1E471K	B	33.3/14.5
C272	4030017460	S.CER ECJ0EB1E102K	B	44.2/21.3
C275	4030016790	S.CER ECJ0EB1C103K	B	32.4/14.5
C276	4030016790	S.CER ECJ0EB1C103K	B	39.4/10
C278	4030016790	S.CER ECJ0EB1C103K	B	32/16.6
C279	4030017460	S.CER ECJ0EB1E102K	B	42.4/21
C280	4030017460	S.CER ECJ0EB1E102K	B	33.3/17
C284	4030017460	S.CER ECJ0EB1E102K	B	40.4/22.1
C285	4030017460	S.CER ECJ0EB1E102K	B	40.4/20.5
C286	4030017040	S.CER ECJ0EB1A333K	B	38.4/20.5
C291	4030016790	S.CER ECJ0EB1C103K	T	38.8/22.8
C292	4030016930	S.CER ECJ0EB1A104K	T	42.7/18.5
C293	4030017730	S.CER ECJ0EB1E471K	B	39.3/20.5
C296	4030016790	S.CER ECJ0EB1C103K	T	40/23
C297	4030017680	S.CER ECJ0EC1H820J	B	37.5/20.5
C300	4030017730	S.CER ECJ0EB1E471K	B	34.8/20.5
C301	4030017680	S.CER ECJ0EC1H820J	B	35.7/20.5
C306	4550007600	S.TAN F920J106MPABMA	T	43/23.3
C313	4030016790	S.CER ECJ0EB1C103K	T	36.5/23.8
C316	4030017460	S.CER ECJ0EB1E102K	T	43.6/19.6
C401	4030017460	S.CER ECJ0EB1E102K	T	11.9/4.5
C402	4030017460	S.CER ECJ0EB1E102K	T	10.7/4.5
C403	4030018860	S.CER ECJ0EB0J105K	B	26.6/5
C404	4030017040	S.CER ECJ0EB1A333K	B	27.1/3.8
C405	4030017620	S.CER ECJ0EC1H100C	B	27.3/20.8
C406	4030017460	S.CER ECJ0EB1E102K	T	18.3/13.7
C412	4030017600	S.CER ECJ0EC1H080C	B	7.8/39
C413	4030017430	S.CER ECJ0EC1H101J	B	8.8/39.1
C414	4030017400	S.CER ECJ0EC1H220J	B	41.2/25.6
C415	4030017780	S.CER ECJ0EB1E472K	B	36.7/3.2
C416	4030016930	S.CER ECJ0EB1A104K	B	32.2/1.1
C417	4030016930	S.CER ECJ0EB1A104K	B	23.3/31.4
C418	4030016930	S.CER ECJ0EB1A104K	B	18.8/24.5
C419	4030017610	S.CER ECJ0EC1H090C	B	12.4/37.9
C420	4030017500	S.CER ECJ0EC1H560J	B	11.2/37.5
C421	4030017430	S.CER ECJ0EC1H101J	B	41.4/18.1
C422	4550007680	S.TAN TEESVP 0J 226M8R	B	14.3/11.8
C423	4550007680	S.TAN TEESVP 0J 226M8R	B	8.9/18.1
C424	4030017460	S.CER ECJ0EB1E102K	B	16.5/15.1
C425	4030017460	S.CER ECJ0EB1E102K	T	12.7/18.4
C426	4030017460	S.CER ECJ0EB1E102K	B	10.4/11.3
C427	4030017460	S.CER ECJ0EB1E102K	B	38.4/38
C428	4030016930	S.CER ECJ0EB1A104K	B	25.9/40.7
C431	4030017460	S.CER ECJ0EB1E102K	T	25.5/36
C434	4030018890	S.CER ECJ0EB0J224K	B	29.3/3.7
C435	4030016790	S.CER ECJ0EB1C103K	T	42.1/24.7
C436	4030017560	S.CER ECJ0EC1H2R5B	B	7.8/40.2
C437	4030017460	S.CER ECJ0EB1E102K	B	10.9/29.6
C438	4030017460	S.CER ECJ0EB1E102K	B	7.1/14.8
C439	4030017460	S.CER ECJ0EB1E102K	B	7.2/12.1
C440	4030017460	S.CER ECJ0EB1E102K	B	8.2/15.3
C441	4030017460	S.CER ECJ0EB1E102K	T	7.8/14.5
C442	4030017460	S.CER ECJ0EB1E102K	B	8.8/12.2
C443	4030017460	S.CER ECJ0EB1E102K	B	10/12.5
C444	4030018860	S.CER ECJ0EB0J105K	B	24.4/10.7
C445	4030017420	S.CER ECJ0EC1H470J	T	13/2.4
C446	4030017510	S.CER ECJ0EC1H680J	B	17.6/40.4
C447	4030018140	S.CER ECJ0EB1H391K	B	17.5/41.7
C448	4030017510	S.CER ECJ0EC1H680J	B	19.2/40.4
C449	4030017580	S.CER ECJ0EC1H060C	B	18.4/41.8
C450	4030017350	S.CER ECJ0EC1H020B	B	19.6/41.3
C451	4030017580	S.CER ECJ0EC1H060C	B	19.6/42.2
C452	4030017380	S.CER ECJ0EC1H050B	B	21.3/41
C453	4030017460	S.CER ECJ0EB1E102K	B	25.9/25
C454	4030017590	S.CER ECJ0EC1H070C	B	24.6/25.5
C455	4030017460	S.CER ECJ0EB1E102K	B	23.4/39
C456	4030017650	S.CER ECJ0EC1H270J	B	34.4/28.3
J1	6510024970	S.CON AXK5F16535YJ	T	17.7/21.6
J2	6510024970	S.CON AXK5F16535YJ	T	28.9/20.4
J3	6510026700	S.CON AXK3S50335G	T	11.9/8.9
J4	6450002250	CON HSJ1456-010320		
J5	6450002131	CON 04-730A3-02BKA		
EP6	6910013310	S.BEA MMZ1608D121B	B	36/36.2
EP9	6910014690	S.BEA MPZ1608S221A-T	B	32.9/3.6
EP10	6910014690	S.BEA MPZ1608S221A-T	B	33.8/1.6
EP11	6910014680	S.BEA MMZ1608Y 121BT	B	36/33.6
EP12	6910014680	S.BEA MMZ1608Y 121BT	B	42/34.4
EP13	6910014680	S.BEA MMZ1608Y 121BT	B	34.5/31.8
EP14	6910014680	S.BEA MMZ1608Y 121BT	B	39.1/29.4
MP1	8930076971	PLA 3076 MAIN SHIELD-1		
MP2	8930077190	SHE 3076 VCO SHEET		
MP3	8930076930	SHE INSULATION SHEET(MH)		

[1st VCO UNIT]

REF NO.	PARTS NO.	DESCRIPTION	M.	H/V LOCATION
IC2	1110005180	S.IC UPC2746TB-E3	T	16.5/14.2
IC3	1130011660	S.IC MB15T61ULPVA-G-ER	B	10.4/11.8
Q1	1530003260	S.TRA 2SC5006-T1	T	11/3.6
Q2	1530003260	S.TRA 2SC5006-T1	T	8.3/8.1
Q3	1530003260	S.TRA 2SC5006-T1	T	8.3/12.6
Q4	1530003260	S.TRA 2SC5006-T1	T	8.3/17.1
Q6	1560000531	S.FET 2SK880-GR(TE85R,F)	B	10.4/16.7
Q7	1530003001	S.TRA 2SC4117-BL(TE85R,F)	B	5.3/16.5
Q8	1530003581	S.TRA 2SC5231C8-TL-E 2	B	18.3/14.6
Q10	1590001810	S.TRA XP1113(TX)	B	8.8/2.9
Q11	1590001810	S.TRA XP1113(TX)	B	7.1/6.6
Q12	1530003591	S.TRA 2SC5277-D2-TL-E 0	B	11.5/6.6
D1	1750001650	S.VAR 1SV309(TPH3,F)	T	5/2
D2	1750001650	S.VAR 1SV309(TPH3,F)	T	3.9/3.8
D3	1750001051	S.VAR HVC417CTRU-E	T	5/5.7
D4	1750001051	S.VAR HVC417CTRU-E	T	5/10.2
D5	1750001051	S.VAR HVC417CTRU-E	T	5/14.7
D7	1790001621	S.DIO 1SV308(TPL3,F)	T	15.8/6.1
D8	1790001621	S.DIO 1SV308(TPL3,F)	T	13.8/9
D9	1790001621	S.DIO 1SV308(TPL3,F)	T	13.8/13.5
D10	1790001621	S.DIO 1SV308(TPL3,F)	T	15.9/16.1
L1	6200011660	S.COI LQW18ANR15G00D	T	3.8/2
L2	6200011660	S.COI LQW18ANR15G00D	T	6.2/2
L3	6200010020	S.COI C2012C-12NG-A	T	8.4/3.5
L4	6200009290	S.COI LQW18AN47NG00D	T	13.2/4.5
L5	6200009250	S.COI LQW18ANR22G00D	T	3.8/5.9
L6	6200010030	S.COI C2012C-15NG-A	T	5.7/8
L7	6200009290	S.COI LQW18AN47NG00D	T	10.5/9.1
L8	6200009250	S.COI LQW18ANR22G00D	T	3.8/10.4
L9	6200010310	S.COI C2012C-27NG-A	T	5.7/12.5
L10	6200009290	S.COI LQW18AN47NG00D	T	10.5/13.7
L12	6200010540	S.COI C2012C-47NG-A	T	5.7/17
L13	6200011770	S.COI LQW18ANR10G00D	T	11.8/17.4
L15	6200011770	S.COI LQW18ANR10G00D	T	14.5/2.6
L16	6200011770	S.COI LQW18ANR10G00D	T	11.8/7.2
L17	6200011770	S.COI LQW18ANR10G00D	T	11.8/11.8
L18	6200011650	S.COI LQW18AN68NG00D	T	10/18.6
L19	6200011860	S.COI LQW18ANR47G00D	T	3.8/14.9
L20	6200007961	S.COI ELJRF 6N8JFB (6.8) [EUR-01]	T	14.1/16.9
	6200007961	S.COI ELJRF 6N8JFB (6.8) [UK-01]		
	6200007961	S.COI ELJRF 6N8JFB (6.8) [USA-01]		
	6200007961	S.COI ELJRF 6N8JFB (6.8) [CAN-01]		
L21	6200007941	S.COI ELJRF 10NJFB [EUR-01]	T	16.5/17.2
	6200007941	S.COI ELJRF 10NJFB [UK-01]		
	6200007941	S.COI ELJRF 10NJFB [USA-01]		
	6200007941	S.COI ELJRF 10NJFB [CAN-01]		
R1	7030004980	S.RES ERJ2GEJ 101 X (100)	T	13.3/3.1
R2	7030004990	S.RES ERJ2GEJ 221 X (220)	T	15.6/1.5
R3	7030005040	S.RES ERJ2GEJ 472 X (4.7K)	T	12.4/1.5
R4	7030005210	S.RES ERJ2GEJ 822 X (8.2K)	T	8.7/1.6
R5	7030007270	S.RES ERJ2GEJ 151 X (150)	T	16.5/1.5
R6	7030004980	S.RES ERJ2GEJ 101 X (100)	T	10.7/7.7
R7	7030004990	S.RES ERJ2GEJ 221 X (220)	T	13/6.1
R8	7030005040	S.RES ERJ2GEJ 472 X (4.7K)	T	9.8/6.1
R9	7030005210	S.RES ERJ2GEJ 822 X (8.2K)	T	6/6.1
R10	7030004990	S.RES ERJ2GEJ 221 X (220)	T	13.9/6.1
R11	7030004980	S.RES ERJ2GEJ 101 X (100)	T	10.7/12.3
R12	7030004990	S.RES ERJ2GEJ 221 X (220)	T	13/10.6
R13	7030005040	S.RES ERJ2GEJ 472 X (4.7K)	T	9.8/10.7
R14	7030005210	S.RES ERJ2GEJ 822 X (8.2K)	T	6/10.6
R15	7030004990	S.RES ERJ2GEJ 221 X (220)	T	13.9/10.6
R16	7030005210	S.RES ERJ2GEJ 822 X (8.2K)	T	6/15.1
R17	7030004990	S.RES ERJ2GEJ 221 X (220)	T	11.8/15.3
R18	7030004990	S.RES ERJ2GEJ 221 X (220)	T	10.7/17.2
R19	7030007270	S.RES ERJ2GEJ 151 X (150)	T	13/15.3
R23	7030005120	S.RES ERJ2GEJ 102 X (1K)	B	9.3/14.8
R24	7030007300	S.RES ERJ2GEJ 332 X (3.3K)	B	8.4/16.6
R25	7030004990	S.RES ERJ2GEJ 221 X (220)	B	13.2/15.4
R26	7030005290	S.RES ERJ2GEJ 682 X (6.8K)	B	8.4/17.5
R27	7030005210	S.RES ERJ2GEJ 822 X (8.2K)	B	7.2/16.7
R28	7030007340	S.RES ERJ2GEJ 153 X (15K)	B	3.4/12.3
R29	7030005090	S.RES ERJ2GEJ 104 X (100K)	B	15.2/12.6
R30	7030004990	S.RES ERJ2GEJ 221 X (220)	B	17.3/13
R31	7030005080	S.RES ERJ2GEJ 823 X (82K)	B	18/16
R32	7030007270	S.RES ERJ2GEJ 151 X (150)	B	18.5/12.2
R33	7030007260	S.RES ERJ2GEJ 330 X (33)	T	19.2/16.4
R34	7030007250	S.RES ERJ2GEJ 220 X (22)	T	17.8/12.5
R35	7030009140	S.RES ERJ2GEJ 272 X (2.7K)	B	3.1/13.5
R36	7030005040	S.RES ERJ2GEJ 472 X (4.7K)	T	15.6/3.2
R37	7030005040	S.RES ERJ2GEJ 472 X (4.7K)	T	13.8/7.7
R38	7030005040	S.RES ERJ2GEJ 472 X (4.7K)	T	13.9/12.2
R39	7030005710	S.RES ERJ2GEJ 121 X (120) [EUR-01]	T	12.9/16.5
	7030005710	S.RES ERJ2GEJ 121 X (120) [UK-01]		
	7030005710	S.RES ERJ2GEJ 121 X (120) [USA-01]		
	7030005040	S.RES ERJ2GEJ 472 X (4.7K) [EXP-01]		
	7030005040	S.RES ERJ2GEJ 472 X (4.7K) [CHN-01]		
	7030005710	S.RES ERJ2GEJ 121 X (120) [CAN-01]		
R40	7030005040	S.RES ERJ2GEJ 472 X (4.7K)	T	17.1/7.2
R41	7030005300	S.RES ERJ2GEJ 150 X (15)	T	19.5/15
R42	7030004970	S.RES ERJ2GEJ 470 X (47)	T	19.2/13.7
R43	7030009530	S.RES ERJ2GEJ 270 X (27) [EUR-01]	T	19.2/10.5
	7030009530	S.RES ERJ2GEJ 270 X (27) [UK-01]		
	7030007260	S.RES ERJ2GEJ 330 X (33) [USA-01]		
	7030010040	S.RES ERJ2GEJ-JPW [EXP-01]		
	7030010040	S.RES ERJ2GEJ-JPW [CHN-01]		
	7030007260	S.RES ERJ2GEJ 330 X (33) [CAN-01]		

M.=Mounted side (T: Mounted on the Top side, B: Mounted on the Bottom side)
S.=Surface mount

ManualsPlus.com

[1st VCO UNIT]

REF NO.	PARTS NO.	DESCRIPTION			M.	H/V LOCATION
R44	7030009530	S.RES	ERJ2GEJ 270 X (27)	[EUR-01]	T	17.1/9.4
	7030009530	S.RES	ERJ2GEJ 270 X (27)	[UK-01]		
	7030007260	S.RES	ERJ2GEJ 330 X (33)	[USA-01]		
	7030010040	S.RES	ERJ2GEJ-JPW	[EXP-01]		
	7030010040	S.RES	ERJ2GEJ-JPW	[CHN-01]		
	7030007260	S.RES	ERJ2GEJ 330 X (33)	[CAN-01]		
R46	7030005120	S.RES	ERJ2GEJ 102 X (1K)		B	13.8/6.4
R47	7030005120	S.RES	ERJ2GEJ 102 X (1K)		B	8.9/7
R48	7030005120	S.RES	ERJ2GEJ 102 X (1K)		B	10/7.9
R49	7030008300	S.RES	ERJ2GEJ 184 X (180K)		B	12.9/6.4
R53	7030005570	S.RES	ERJ2GEJ 820 X (82)		B	12.3/15.4
R55	7030005120	S.RES	ERJ2GEJ 102 X (1K)		B	18.5/9.7
R56	7030005120	S.RES	ERJ2GEJ 102 X (1K)		B	16.9/10.1
R57	7030005120	S.RES	ERJ2GEJ 102 X (1K)		B	18.5/10.8
R59	7030005040	S.RES	ERJ2GEJ 472 X (4.7K)		T	9.8/15.6
R60	7030010040	S.RES	ERJ2GEJ-JPW		T	2.7/1.7
R61	7030010040	S.RES	ERJ2GEJ-JPW		T	2.7/5.4
R62	7030010040	S.RES	ERJ2GEJ-JPW		T	2.7/10.1
R63	7030010040	S.RES	ERJ2GEJ-JPW		T	2.7/14.6
R64	7030010040	S.RES	ERJ2GEJ-JPW	[EXP-01]		
	7030010040	S.RES	ERJ2GEJ-JPW	[CHN-01]		
R65	7030010040	S.RES	ERJ2GEJ-JPW	[EXP-01]		
	7030010040	S.RES	ERJ2GEJ-JPW	[CHN-01]		
R66	7030009530	S.RES	ERJ2GEJ 270 X (27)	[EUR-01]	T	16.3/10.7
	7030009530	S.RES	ERJ2GEJ 270 X (27)	[UK-01]		
	7030010090	S.RES	ERJ2GEJ 180 X (18)	[USA-01]		
	7030010090	S.RES	ERJ2GEJ 180 X (18)	[CAN-01]		
C2	4030017460	S.CER	ECJ0EB1E102K		T	5.9/3.8
C3	4030017370	S.CER	ECJ0EC1H3R5B		T	12.4/3.1
C4	4030017360	S.CER	ECJ0EC1H030B		T	11.5/1.6
C5	4030017460	S.CER	ECJ0EB1E102K		T	10.5/1.6
C6	4030016930	S.CER	ECJ0EB1A104K		T	9.6/1.6
C7	4030017340	S.CER	ECJ0EC1H010B		T	15.3/4.5
C8	4030016930	S.CER	ECJ0EB1A104K		T	13.3/1.5
C9	4030017460	S.CER	ECJ0EB1E102K		T	2.7/7
C10	4030017460	S.CER	ECJ0EB1E102K		T	3.7/8
C11	4030017380	S.CER	ECJ0EC1H050B		T	8.8/6.1
C12	4030017460	S.CER	ECJ0EB1E102K		T	6.9/6.1
C13	4030016930	S.CER	ECJ0EB1A104K		T	7.8/6.1
C14	4030017530	S.CER	ECJ0EC1H0R5B		T	12.9/7.7
C15	4030016930	S.CER	ECJ0EB1A104K		T	10.7/6.1
C16	4030017380	S.CER	ECJ0EC1H050B		T	9.8/7.7
C17	4030017460	S.CER	ECJ0EB1E102K		T	2.7/12.5
C18	4030017460	S.CER	ECJ0EB1E102K		T	3.7/12.5
C19	4030017610	S.CER	ECJ0EC1H090C		T	9.8/12.3
C20	4030017610	S.CER	ECJ0EC1H090C		T	8.8/10.6
C21	4030017460	S.CER	ECJ0EB1E102K		T	7.8/10.6
C22	4030016930	S.CER	ECJ0EB1A104K		T	6.9/10.6
C23	4030017530	S.CER	ECJ0EC1H0R5B		T	13/12.2
C24	4030016930	S.CER	ECJ0EB1A104K		T	10.7/10.7
C25	4030017460	S.CER	ECJ0EB1E102K		T	2.8/17.4
C26	4030017460	S.CER	ECJ0EB1E102K		T	7.8/15.1
C27	4030017390	S.CER	ECJ0EC1H180J		T	9.8/17.2
C28	4030017390	S.CER	ECJ0EC1H180J		T	8.8/15.1
C29	4030017460	S.CER	ECJ0EB1E102K		T	3.7/17
C30	4030016930	S.CER	ECJ0EB1A104K		T	10.7/15.6
C31	4030017460	S.CER	ECJ0EB1E102K		B	12.4/5
C35	4030017770	S.CER	ECJ0EB1E332K		B	8.4/15.7
C37	4550003220	S.TAN	TEESVA 1E 105M8R		B	14.2/17.2
C38	4550000930	S.TAN	TEESVA 1D 684M8R		B	4.9/12.8
C39	4550000930	S.TAN	TEESVA 1D 684M8R		B	7.1/12.8
C40	4030016790	S.CER	ECJ0EB1C103K		B	3.1/10.5
C41	4030017460	S.CER	ECJ0EB1E102K		B	13.6/10.8
C42	4030017460	S.CER	ECJ0EB1E102K		B	16.1/13.5
C43	4030017620	S.CER	ECJ0EC1H100C	[EUR-01]	B	19.2/16.3
	4030017620	S.CER	ECJ0EC1H100C	[UK-01]		
	4030017620	S.CER	ECJ0EC1H100C	[USA-01]		
	4030017350	S.CER	ECJ0EC1H020B	[EXP-01]		
	4030017350	S.CER	ECJ0EC1H020B	[CHN-01]		
	4030017620	S.CER	ECJ0EC1H100C	[CAN-01]		
C44	4030017460	S.CER	ECJ0EB1E102K		B	18.5/13.1
C45	4030017340	S.CER	ECJ0EC1H010B		T	12.9/18.1
C46	4030017460	S.CER	ECJ0EB1E102K		T	18.3/13.7
C47	4030017460	S.CER	ECJ0EB1E102K		T	18.3/15.3
C48	4340000290	S.MYL	ECHU 1C 103JX5		B	3.1/15.7
C49	4030017380	S.CER	ECJ0EC1H050B	[EUR-01]	T	15.1/12.5
	4030017380	S.CER	ECJ0EC1H050B	[UK-01]		
	4030017380	S.CER	ECJ0EC1H050B	[USA-01]		
	4030017620	S.CER	ECJ0EC1H100C	[EXP-01]		
	4030017620	S.CER	ECJ0EC1H100C	[CHN-01]		
	4030017380	S.CER	ECJ0EC1H050B	[CAN-01]		
C50	4030017460	S.CER	ECJ0EB1E102K		T	19.2/12.1
C52	4030017460	S.CER	ECJ0EB1E102K		T	18.3/8.9
C54	4030017460	S.CER	ECJ0EB1E102K		T	16.5/3.7
C55	4030017460	S.CER	ECJ0EB1E102K		T	14.8/6.1
C56	4030017460	S.CER	ECJ0EB1E102K		T	14.8/10.6
C57	4030017460	S.CER	ECJ0EB1E102K		T	14.2/14.9
C58	4030016930	S.CER	ECJ0EB1A104K		B	13.2/13.8
C59	4030016790	S.CER	ECJ0EB1C103K		B	10/6.3
C60	4030016790	S.CER	ECJ0EB1C103K		B	8.8/8.7
C61	4030016930	S.CER	ECJ0EB1A104K		B	11.3/15
C62	4030016930	S.CER	ECJ0EB1A104K		B	13.6/9.9
C63	4030017460	S.CER	ECJ0EB1E102K		B	13.6/11.7
C64	4550007600	S.TAN	F920J106MPABMA		B	15.2/15
C65	4550007600	S.TAN	F920J106MPABMA		B	5.2/2.5
C66	4550007600	S.TAN	F920J106MPABMA		B	4.4/4.2
C67	4550007600	S.TAN	F920J106MPABMA		B	4/6
C68	4030017460	S.CER	ECJ0EB1E102K		B	13.6/12.6
C69	4030016930	S.CER	ECJ0EB1A104K		T	6.9/15.1
C70	4550007600	S.TAN	F920J106MPABMA		B	4.8/8.4
C71	4030017460	S.CER	ECJ0EB1E102K		B	13.8/2.3
C72	4030017350	S.CER	ECJ0EC1H020B		T	20.4/11

[1st VCO UNIT]

REF NO.	PARTS NO.	DESCRIPTION			M.	H/V LOCATION
C73	4030017350	S.CER	ECJ0EC1H020B		T	18.3/6.8
C74	4030017380	S.CER	ECJ0EC1H050B	[EUR-01]	T	14.1/18.7
	4030017380	S.CER	ECJ0EC1H050B	[UK-01]		
	4030017380	S.CER	ECJ0EC1H050B	[USA-01]		
	4030017380	S.CER	ECJ0EC1H050B	[CAN-01]		
C75	4030017370	S.CER	ECJ0EC1H3R5B	[EUR-01]	T	14.1/17.8
	4030017370	S.CER	ECJ0EC1H3R5B	[UK-01]		
	4030017370	S.CER	ECJ0EC1H3R5B	[USA-01]		
	4030017370	S.CER	ECJ0EC1H3R5B	[CAN-01]		
C76	4030017600	S.CER	ECJ0EC1H080C	[EUR-01]	T	15.3/17.4
	4030017600	S.CER	ECJ0EC1H080C	[UK-01]		
	4030017600	S.CER	ECJ0EC1H080C	[USA-01]		
	4030017600	S.CER	ECJ0EC1H080C	[CAN-01]		
C77	4030017550	S.CER	ECJ0EC1H1R5B	[EUR-01]	T	16.5/18.1
	4030017550	S.CER	ECJ0EC1H1R5B	[UK-01]		
	4030017550	S.CER	ECJ0EC1H1R5B	[USA-01]		
	4030017550	S.CER	ECJ0EC1H1R5B	[CAN-01]		
C78	4030017580	S.CER	ECJ0EC1H060C	[EUR-01]	T	17.7/18.3
	4030017580	S.CER	ECJ0EC1H060C	[UK-01]		
	4030017580	S.CER	ECJ0EC1H060C	[USA-01]		
	4030017580	S.CER	ECJ0EC1H060C	[CAN-01]		
J1	6510024980	S.CON	AXK6F16335YJ		B	17.4/5.4
MP1	8510019050	CAS	3076 A-VCO CASE			
MP2	8510019090	PLA	3076 VCO PLATE Y1125			

[2nd VCO UNIT]

REF NO.	PARTS NO.	DESCRIPTION		M.	H/V LOCATION
IC1	1130011671	S.IC	MB15E03SLPFV1-G-ER-6E1	B	5.6/10.8
Q1	1530003611	S.TRA	FH102-TR-E 0	T	5.3/9
Q3	1530003591	S.TRA	2SC5277-D2-TL-E 0	T	9.7/14.7
Q4	1530003630	S.TRA	2SC4617 TLS	T	9/6.6
D1	1750000741	S.VAR	1SV314(TPH3,F)	T	1.9/11.5
L1	6200009070	S.COI	LQW18AN18NG00D	T	4/12.5
L2	6200005721	S.COI	ELJRE 33NGFA	T	7.3/7
L3	6200005701	S.COI	ELJRE 22NGFA	T	4.6/5.4
L4	6200009351	S.COI	ELJRE R22GFA	T	5.2/14.1
R1	7030004970	S.RES	ERJ2GEJ 470 X (47)	T	6.2/14.7
R2	7030005050	S.RES	ERJ2GEJ 103 X (10K)	T	5.7/10.8
R3	7030005120	S.RES	ERJ2GEJ 102 X (1K)	T	3/9
R4	7030005120	S.RES	ERJ2GEJ 102 X (1K)	T	4.8/7.2
R9	7030005580	S.RES	ERJ2GEJ 560 X (56)	B	6.8/6.6
R10	7030004980	S.RES	ERJ2GEJ 101 X (100)	B	6.8/7.5
R11	7030005120	S.RES	ERJ2GEJ 102 X (1K)	B	4.8/7.1
R12	7030005120	S.RES	ERJ2GEJ 102 X (1K)	B	3/7.1
R13	7030005120	S.RES	ERJ2GEJ 102 X (1K)	B	3.9/7.1
R14	7030005530	S.RES	ERJ2GEJ 100 X (10)	B	6.5/14.7
R15	7030009270	S.RES	ERJ2GEJ 821 X (820)	B	5.3/14.2
R16	7030005120	S.RES	ERJ2GEJ 102 X (1K)	T	10.4/11.8
R17	7030008300	S.RES	ERJ2GEJ 184 X (180K)	T	7.9/13
R18	7030005120	S.RES	ERJ2GEJ 102 X (1K)	T	7.5/15.1
R19	7030005120	S.RES	ERJ2GEJ 102 X (1K)	T	7.9/12.1
R21	7030005120	S.RES	ERJ2GEJ 102 X (1K)	T	8.8/8
R22	7030007280	S.RES	ERJ2GEJ 331 X (330)	B	5.3/15.1
C1	4550006910	S.TAN	TEESVP 1C 334M8R	T	2.9/14.9
C2	4030017390	S.CER	ECJ0EC1H180J	T	2.4/12.5
C3	4030017640	S.CER	ECJ0EC1H150J	T	5.3/12
C4	4030017620	S.CER	ECJ0EC1H100C	T	3.9/10.8
C5	4030017640	S.CER	ECJ0EC1H150J	T	3/9.9
C6	4030017460	S.CER	ECJ0EB1E102K	T	3/8.1
C7	4030017570	S.CER	ECJ0EC1H040B	T	6.2/7
C8	4030017340	S.CER	ECJ0EC1H010B	T	5.7/5.4
C9	4030017380	S.CER	ECJ0EC1H050B	T	3.3/6.2
C10	4030017380	S.CER	ECJ0EC1H050B	T	3.3/4.7
C16	4030017730	S.CER	ECJ0EB1E471K	T	4.2/3
C17	4030017380	S.CER	ECJ0EC1H050B	B	8/7.1
C18	4030017420	S.CER	ECJ0EC1H470J	B	1.2/9.5
C19	4030017420	S.CER	ECJ0EC1H470J	B	2.1/7.1
C20	4030017420	S.CER	ECJ0EC1H470J	B	1.2/7.1
C21	4550007630	S.TAN	F920J475MPABMA	B	2.6/14.7
C22	4030016790	S.CER	ECJ0EB1C103K	T	10/13
C23	4030016790	S.CER	ECJ0EB1C103K	T	7.9/13.9
C24	4030016790	S.CER	ECJ0EB1C103K	B	8.4/14.3
C25	4030017460	S.CER	ECJ0EB1E102K	B	9.9/9.5
C26	4030016930	S.CER	ECJ0EB1A104K	B	9.9/13
C27	4030017460	S.CER	ECJ0EB1E102K	B	1.2/11.4
C30	4030017460	S.CER	ECJ0EB1E102K	T	6.9/5.3
C31	4030017460	S.CER	ECJ0EB1E102K	B	8.9/6.1
C32	4550007600	S.TAN	F920J106MPABMA	T	8.3/10.1
C33	4030017350	S.CER	ECJ0EC1H020B	T	2.4/13.5
J1	6510024980	S.CON	AXK6F16335YJ	B	5.6/3.8
MP1	8510019030	CAS	3076 B-VCO CASE		

M.=Mounted side (T: Mounted on the Top side, B: Mounted on the Bottom side)
S.=Surface mount

ManualsPlus.com

[LOGIC UNIT]

REF NO.	PARTS NO.	DESCRIPTION		M.	H/V LOCATION
IC1	1130007031	S.IC TC7W08FU(TE12L,F)		B	12.1/78.1
IC3	1180003380	S.REG NJU7775F32-TE1-#ZZZB		B	42.6/39
IC4	1180003380	S.REG NJU7775F32-TE1-#ZZZB		B	32.7/41.8
IC6	1110005731	S.IC S-80928CNMC-G8Y-G		B	45.7/58.4
IC8	1130007111	S.IC TC7W04FU(TE12L,F)		B	7.6/55.1
IC9	1110002810	S.IC NJM2070M-TE1-#ZZZB		B	5.1/86.8
IC10	1130011860	S.IC SM6451BT-G-E2		B	4/77
IC11	1130007111	S.IC TC7W04FU(TE12L,F)		B	5.6/33.1
IC12	1110006380	S.IC LM2904PWR		B	21.7/42.6
IC14	1140012950	S.IC 24LC512T-I/SM		B	40.6/92.7
IC15	1140012950	S.IC 24LC512T-I/SM		B	42.7/86.9
IC16	1190001830	S.IC BH2220FVM-TR		B	12.1/74.7
IC17	1140013020	S.IC HD64F2238RTF13V		B	31.2/66.6
IC18	1190002830	S.IC BQ24064DRCR		B	42.8/51.7
IC19	1110006490	S.IC LMV321IDCKR		B	1.9/49.7
IC20	1130011770	S.IC CD4066BPWR		B	7.7/47.2
Q2	1510000671	S.TRA 2SA1588-GR(TE85R, F)		B	37.7/37
Q5	1530003630	S.TRA 2SC4617 TLS		T	9.3/99.8
Q8	1510001100	S.TRA 2SA1832-GR(TE85R,F)		B	4/56.6
Q10	1530003990	S.TRA 2SC4738-BL(TE85L,F)		B	2.3/54.8
Q11	1520000651	S.TRA 2SB1201S-TL-E		B	27.4/94.4
Q12	1590001170	S.TRA XP1501-(TX).AB		B	32.3/91.8
Q16	1590003250	S.TRA UNR9115J-(TX)		B	25/45.7
Q18	1530003990	S.TRA 2SC4738-BL(TE85L,F)		B	11.3/51.8
Q20	1590001190	S.TRA XP6501-(TX).AB		B	20/51.5
Q21	1590001650	S.TRA XP4601(TX)		B	20.5/15.7
Q23	1590001391	S.FET 2SJ144-Y(TE85R,F)		B	16.5/50.6
Q24	1530003990	S.TRA 2SC4738-BL(TE85L,F)		B	3.4/19.4
Q25	1590003290	S.TRA UNR9213J-(TX)		B	39.7/56.7
Q26	1590003290	S.TRA UNR9213J-(TX)		B	41.9/58.2
Q27	1590002950	S.FET HAT1023R-EL		B	36.5/46.6
Q28	1590001810	S.TRA XP1113(TX)		B	15.9/56.6
Q29	1530003091	S.TRA 2SC4213-B(TE85R,F)		B	12.2/90.2
Q30	1590003250	S.TRA UNR9115J-(TX)		B	27.3/90.7
D2	1790000671	S.DIO SB07-03C-TB-E		B	34.6/51.1
D5	1790001250	S.DIO MA2S111-(TX)		B	23.5/21.8
D7	1790001250	S.DIO MA2S111-(TX)	[USA-01]	B	32.8/22.2
	1790001250	S.DIO MA2S111-(TX)	[EXP-01]		
	1790001250	S.DIO MA2S111-(TX)	[CHN-01]		
	1790001250	S.DIO MA2S111-(TX)	[CAN-01]		
D8	1790001250	S.DIO MA2S111-(TX)		B	24.7/21.2
D10	1790001250	S.DIO MA2S111-(TX)	[UK-01]	B	36.4/22.2
	1790001250	S.DIO MA2S111-(TX)	[EXP-01]		
	1790001250	S.DIO MA2S111-(TX)	[CHN-01]		
D11	1790001250	S.DIO MA2S111-(TX)		B	25.9/21.2
D13	1790001250	S.DIO MA2S111-(TX)	[EUR-01]	B	37.6/22.2
	1790001250	S.DIO MA2S111-(TX)	[USA-01]		
	1790001250	S.DIO MA2S111-(TX)	[EXP-01]		
	1790001250	S.DIO MA2S111-(TX)	[CHN-01]		
	1790001250	S.DIO MA2S111-(TX)	[CAN-01]		
D14	1790001250	S.DIO MA2S111-(TX)		B	41.8/20.3
D15	1750000771	S.VAR HVC376BTRF-E		B	46.7/77.6
D16	1750000940	S.DIO ISS400 TE61		B	.9/57.2
D19	1720000821	S.VAR SVC347S/T-TL-E		B	26.5/17
D22	1790001250	S.DIO MA2S111-(TX)		B	16.1/54.7
D24	1790001561	S.DIO 1SS372(TE85R,F)		B	5.4/29
D25	1790001561	S.DIO 1SS372(TE85R,F)		B	5.4/26.4
D26	1790001561	S.DIO 1SS372(TE85R,F)		B	5.4/23.8
D27	1790001561	S.DIO 1SS372(TE85R,F)		B	5.4/21.2
D28	1790001250	S.DIO MA2S111-(TX)		B	31.8/50.2
D29	1790001250	S.DIO MA2S111-(TX)		B	37.8/35.1
D31	1790001250	S.DIO MA2S111-(TX)		B	30/47.6
D32	1790001250	S.DIO MA2S111-(TX)		B	34.8/34.3
D33	1790001250	S.DIO MA2S111-(TX)		B	41.2/55.2
D34	1790001140	S.ZEN MA8039-L(TX)		B	39/54.7
D35	1790001240	S.DIO MA2S728-(TX)		B	36.8/51.2
D37	1790001250	S.DIO MA2S111-(TX)		B	22.5/15.8
D38	1790001810	S.VAR AVR-M1005C080MTABB		B	39.4/49.8
D39	1790001810	S.VAR AVR-M1005C080MTABB		B	38.2/52.6
D40	175 0001670	S.DIO RR264M-400TR		B	31.3/54.2
X1	6050011830	S.XTA CR-774 SMD-49TB 12.288 MHz		B	42.5/77.3
L1	6200003640	S.COI MLF1608E 100K-T		B	7.9/31.6
R2	7410001110	S.ARR EXB28V332JX		B	42.9/67.2
R3	7410001220	S.ARR EXB28V103JX		B	31.1/78
R5	7030005050	S.RES ERJ2GEJ 103 X (10K)		B	44.9/60.5
R6	7410001220	S.ARR EXB28V103JX		B	24.6/76.5
R7	7410001130	S.ARR EXB28V102JX		B	36.1/56
R9	7030005240	S.RES ERJ2GEJ 473 X (47K)		B	42.6/27.7
R10	7030005240	S.RES ERJ2GEJ 473 X (47K)		B	36.7/88.4
R11	7030005040	S.RES ERJ2GEJ 472 X (4.7K)		B	35.8/88.4
R16	7030005090	S.RES ERJ2GEJ 104 X (100K)		B	5.7/58.2
R19	7030005570	S.RES ERJ2GEJ 820 X (82)		T	9.4/98
R20	7030005570	S.RES ERJ2GEJ 820 X (82)		T	7.6/98
R21	7030005090	S.RES ERJ2GEJ 104 X (100K)		B	5.7/57.3
R22	7030005570	S.RES ERJ2GEJ 820 X (82)		T	8.5/98
R23	7410001130	S.ARR EXB28V102JX		B	16.2/68.4
R24	7030010040	S.RES ERJ2GEJ-JPW		B	43.3/65.2
R29	7030005050	S.RES ERJ2GEJ 103 X (10K)		B	39.2/72
R31	7410001220	S.ARR EXB28V103JX		B	40.4/70.2
R32	7030005530	S.RES ERJ2GEJ 100 X (10)		B	38.2/79.3
R33	7030005160	S.RES ERJ2GEJ 105 X (1M)		B	38.6/77.2
R37	7030005240	S.RES ERJ2GEJ 473 X (47K)		B	14.4/23.4
R39	7030005240	S.RES ERJ2GEJ 473 X (47K)		B	4.1/55.1
R40	7410001130	S.ARR EXB28V102JX		B	27.8/56.9

[LOGIC UNIT]

REF NO.	PARTS NO.	DESCRIPTION	M.	H/V LOCATION
R41	7030005090	S.RES ERJ2GEJ 104 X (100K)	B	16/23.4
R44	7030005050	S.RES ERJ2GEJ 103 X (10K)	B	3.9/58.2
R45	7030008290	S.RES ERJ2GEJ 183 X (18K)	B	2.2/57.3
R46	7030008010	S.RES ERJ2GEJ 123 X (12K)	B	4.1/54.2
R48	7410001130	S.ARR EXB28V102JX	B	21.2/60
R50	7410001130	S.ARR EXB28V102JX	B	26.1/58.7
R51	7030005090	S.RES ERJ2GEJ 104 X (100K)	B	46.3/80.1
R53	7410001130	S.ARR EXB28V102JX	B	23.2/58.4
R57	7030010040	S.RES ERJ2GEJ-JPW	B	2.2/56.4
R61	7030007320	S.RES ERJ2GEJ 225 X (2.2M)	B	46.3/75.9
R66	7030005090	S.RES ERJ2GEJ 104 X (100K)	B	14.8/80
R67	7410001130	S.ARR EXB28V102JX	B	19.3/69.7
R70	7030005050	S.RES ERJ2GEJ 103 X (10K)	B	37.9/57.3
R71	7030005050	S.RES ERJ2GEJ 103 X (10K)	B	37.9/58.2
R79	7410001130	S.ARR EXB28V102JX	B	33.6/56
R81	7030005160	S.RES ERJ2GEJ 105 X (1M)	B	30.8/88.9
R83	7030005000	S.RES ERJ2GEJ 471 X (470)	B	8.6/77.9
R84	7030005000	S.RES ERJ2GEJ 471 X (470)	B	15.1/77.3
R85	7030005070	S.RES ERJ2GEJ 683 X (68K)	B	32.2/90.1
R86	7030000010	S.RES MCR10EZHJ JPW (000)	B	17.9/90
R89	7030005120	S.RES ERJ2GEJ 102 X (1K)	B	34.5/92
R90	7030005090	S.RES ERJ2GEJ 104 X (100K)	B	34.5/93.8
R91	7030005090	S.RES ERJ2GEJ 104 X (100K)	B	26/78.8
R97	7030008290	S.RES ERJ2GEJ 183 X (18K)	B	31.8/93.6
R102	7030005050	S.RES ERJ2GEJ 103 X (10K)	B	7.3/78.5
R105	7030005050	S.RES ERJ2GEJ 103 X (10K)	B	5/81.3
R107	7030005170	S.RES ERJ2GEJ 474 X (470K)	B	39.5/38.3
R108	7030005040	S.RES ERJ2GEJ 472 X (4.7K)	B	38.1/38.8
R111	7030005530	S.RES ERJ2GEJ 100 X (10)	B	4.8/91.1
R112	7030005000	S.RES ERJ2GEJ 471 X (470)	T	40.7/12.8
R113	7030005110	S.RES ERJ2GEJ 224 X (220K)	B	24.3/17.9
R114	7030005120	S.RES ERJ2GEJ 102 X (1K)	B	2.9/82.2
R115	7030007340	S.RES ERJ2GEJ 153 X (15K)	B	6.6/82.2
R116	7030005090	S.RES ERJ2GEJ 104 X (100K)	B	23.8/15
R117	7030010040	S.RES ERJ2GEJ-JPW	B	40.2/40.2
R118	7030005310	S.RES ERJ2GEJ 124 X (120K)	B	24.8/43
R121	7030008010	S.RES ERJ2GEJ 123 X (12K)	B	24.4/41.8
R124	7030005090	S.RES ERJ2GEJ 104 X (100K)	B	34.3/38.8
R128	7030005530	S.RES ERJ2GEJ 100 X (10)	B	11.1/53.7
R129	7030005040	S.RES ERJ2GEJ 472 X (4.7K)	B	9.9/53.1
R130	7030005570	S.RES ERJ2GEJ 820 X (82)	B	12.8/51.8
R132	7030005100	S.RES ERJ2GEJ 154 X (150K)	B	11.1/50.4
R133	7030005170	S.RES ERJ2GEJ 474 X (470K)	B	21/38.3
R135	7030008300	S.RES ERJ2GEJ 184 X (180K)	B	14/54.2
R136	7030008300	S.RES ERJ2GEJ 184 X (180K)	B	23.8/38.7
R137	7030009150	S.RES ERJ2GEJ 824 X (820K)	B	22.6/38.3
R140	7030005080	S.RES ERJ2GEJ 823 X (82K)	B	15.7/53.7
R141	7030005090	S.RES ERJ2GEJ 104 X (100K)	B	15.3/52.5
R142	7030005080	S.RES ERJ2GEJ 823 X (82K)	B	17.9/40.1
R144	7030007340	S.RES ERJ2GEJ 153 X (15K)	B	17.8/54.9
R145	7030005080	S.RES ERJ2GEJ 823 X (82K)	B	21.9/17.4
R146	7030005220	S.RES ERJ2GEJ 223 X (22K)	B	21.9/18.3
R147	7030005170	S.RES ERJ2GEJ 474 X (470K)	B	17.9/41
R149	7030005090	S.RES ERJ2GEJ 104 X (100K)	B	19.5/53.4
R150	7030005100	S.RES ERJ2GEJ 154 X (150K)	B	17.9/42.8
R151	7030007350	S.RES ERJ2GEJ 393 X (39K)	B	17.9/43.7
R155	7030008300	S.RES ERJ2GEJ 184 X (180K)	B	18.7/49.7
R156	7030008300	S.RES ERJ2GEJ 184 X (180K)	B	18.2/50.9
R157	7030007320	S.RES ERJ2GEJ 225 X (2.2M)	B	16.5/52.5
R160	7030007320	S.RES ERJ2GEJ 225 X (2.2M)	B	21.8/51.1
R161	7030005170	S.RES ERJ2GEJ 474 X (470K)	B	21.2/53.4
R162	7030005080	S.RES ERJ2GEJ 823 X (82K)	B	19.1/45.2
R163	7030005050	S.RES ERJ2GEJ 103 X (10K)	B	24.5/47.6
R165	7030005160	S.RES ERJ2GEJ 105 X (1M)	B	18.2/47.6
R166	7030007350	S.RES ERJ2GEJ 393 X (39K)	B	18.2/45.2
R167	7030010040	S.RES ERJ2GEJ-JPW	B	23.6/47.6
R170	7030007320	S.RES ERJ2GEJ 225 X (2.2M)	B	22.7/49.2
R171	7030009290	S.RES ERJ2GEJ 562 X (5.6K)	B	19.1/47.6
R172	7030005050	S.RES ERJ2GEJ 103 X (10K)	B	4.9/19.2
R177	7030006610	S.RES ERJ2GEJ 394 X (390K)	B	21.8/49.2
R178	7030007350	S.RES ERJ2GEJ 393 X (39K)	B	20.5/48.8
R179	7030005240	S.RES ERJ2GEJ 473 X (47K)	B	40.2/58.3
R182	7030005090	S.RES ERJ2GEJ 104 X (100K)	B	38.2/49.9
R184	7030009190	S.RES RR0510P-332-D (3.3K)	B	44.8/48.5
R185	7030005770	S.RES RR0510P-101-D (100)	B	42/47.9
R188	7030009190	S.RES RR0510P-332-D (3.3K)	B	43.2/47.5
R189	7510001661	S.THR NTCG16 4LH 473JT	B	34.9/36.2
R190	7030008270	S.RES RR0510P-104-D (100K)	B	33.9/37.6
R191	7030008051	S.RES ERA3YKD 184V (180K)	B	30/50.2
R192	7030008270	S.RES RR0510P-104-D (100K)	B	31.3/48.5
R193	7030008270	S.RES RR0510P-104-D (100K)	B	32.5/35.1
R194	7030008051	S.RES ERA3YKD 184V (180K)	B	36/34.4
R195	7030011880	S.RES RR0510P-183-D (18K)	B	42.3/56.3
R196	7030011000	S.RES RR0510P-392-D (3.9K)	B	43.5/56.1
R201	7030005080	S.RES ERJ2GEJ 823 X (82K)	B	43/54.2
R202	7030008270	S.RES RR0510P-104-D (100K)	B	46/55.1
R203	7030005240	S.RES ERJ2GEJ 473 X (47K)	B	43.5/57.8
R208	7410001130	S.ARR EXB28V102JX	B	38.6/60.9
R209	7030007280	S.RES ERJ2GEJ 331 X (330)	B	37.9/59.1
R210	7030005050	S.RES ERJ2GEJ 103 X (10K)	B	22.6/71.7
R211	7030005050	S.RES ERJ2GEJ 103 X (10K)	B	40.8/62.4
R212	7030005120	S.RES ERJ2GEJ 102 X (1K)	B	41.8/63.3
R213	7030005120	S.RES ERJ2GEJ 102 X (1K)	B	21.2/73.9
R214	7030005120	S.RES ERJ2GEJ 102 X (1K)	B	22.1/73.9
R216	7510001581	S.THE NTCG16 4BH 153JT	B	46.5/23.2
R217	7030005050	S.RES ERJ2GEJ 103 X (10K)	B	20.3/73.9
R218	7030005050	S.RES ERJ2GEJ 103 X (10K)	B	3.8/50.2
R219	7030005040	S.RES ERJ2GEJ 472 X (4.7K)	B	4.2/51.5
R220	7030005040	S.RES ERJ2GEJ 472 X (4.7K)	B	8.6/51.9
R221	7030005040	S.RES ERJ2GEJ 472 X (4.7K)	B	4.2/49
R222	7030005040	S.RES ERJ2GEJ 472 X (4.7K)	B	4.2/48.1
R223	7030009290	S.RES ERJ2GEJ 562 X (5.6K)	B	5.8/51.5
R224	7030009290	S.RES ERJ2GEJ 562 X (5.6K)	B	7.4/51.5
R225	7030005600	S.RES ERJ2GEJ 273 X (27K)	B	7.4/43

M.=Mounted side (T: Mounted on the Top side, B: Mounted on the Bottom side)
S.=Surface mount

ManualsPlus.com

[LOGIC UNIT]

REF NO.	PARTS NO.	DESCRIPTION	M.	H/V LOCATION
R226	7030005600	S.RES ERJ2GEJ 273 X (27K)	B	9/43
R227	7030005050	S.RES ERJ2GEJ 103 X (10K)	B	4.2/52.4
R228	7030005050	S.RES ERJ2GEJ 103 X (10K)	B	22.6/70.6
R229	7030010040	S.RES ERJ2GEJ-JPW	B	34.7/77.4
R231	7030005050	S.RES ERJ2GEJ 103 X (10K)	B	43/31.2
R232	7030005050	S.RES ERJ2GEJ 103 X (10K)	B	42.6/26.2
R233	7030005050	S.RES ERJ2GEJ 103 X (10K)	B	42.6/24.7
R234	7030005050	S.RES ERJ2GEJ 103 X (10K)	B	42.6/23.2
R235	7030005050	S.RES ERJ2GEJ 103 X (10K)	B	42.6/29.2
R236	7030005240	S.RES ERJ2GEJ 473 X (47K)	B	36.8/95.4
R237	7030005240	S.RES ERJ2GEJ 473 X (47K)	B	35/95.4
R239	7030005240	S.RES ERJ2GEJ 473 X (47K)	B	23.8/73.9
R240	7030005110	S.RES ERJ2GEJ 224 X (220K)	B	24.7/74.5
R241	7030005240	S.RES ERJ2GEJ 473 X (47K)	T	10.6/98.5
R242	7030005090	S.RES ERJ2GEJ 104 X (100K)	B	37.6/81.6
R243	7030005240	S.RES ERJ2GEJ 473 X (47K)	B	40.3/31.7
R244	7030005240	S.RES ERJ2GEJ 473 X (47K)	B	40.3/30.7
R245	7030010040	S.RES ERJ2GEJ-JPW	B	8.4/87.1
R246	7030005050	S.RES ERJ2GEJ 103 X (10K)	B	39.2/73.8
R247	7030005050	S.RES ERJ2GEJ 103 X (10K)	B	38.3/73.8
R248	7030005090	S.RES ERJ2GEJ 104 X (100K)	B	24.4/40.9
R249	7030005090	S.RES ERJ2GEJ 104 X (100K)	B	17.9/41.9
R250	7030005100	S.RES ERJ2GEJ 154 X (150K)	B	33.8/90.1
R251	7030005770	S.RES RR0510P-101-D (100)	B	40.7/48.2
R252	7030000020	S.RES MCR10EZHJ 1 (010)	B	29.4/54.2
R253	7030005170	S.RES ERJ2GEJ 474 X (470K)	B	26.5/74
R254	7030010040	S.RES ERJ2GEJ-JPW	B	35.9/75.1
R256	7030010040	S.RES ERJ2GEJ-JPW	B	40.4/67.8
R257	7030005050	S.RES ERJ2GEJ 103 X (10K)	B	22.3/90.3
C1	4030016930	S.CER ECJ0EB1A104K	B	37.6/88.4
C2	4030017460	S.CER ECJ0EB1E102K	B	26/75.2
C3	4030017460	S.CER ECJ0EB1E102K	B	26.9/75.2
C4	4030017460	S.CER ECJ0EB1E102K	B	26.9/76.9
C5	4030017460	S.CER ECJ0EB1E102K	B	27.8/77
C6	4030017460	S.CER ECJ0EB1E102K	B	29/77.9
C7	4030016790	S.CER ECJ0EB1C103K	B	46.1/56
C8	4030017460	S.CER ECJ0EB1E102K	B	29/77
C9	4030017460	S.CER ECJ0EB1E102K	B	32.9/77.8
C10	4030017460	S.CER ECJ0EB1E102K	B	33.8/77.8
C15	4030017460	S.CER ECJ0EB1E102K	B	14.4/24.3
C16	4030017460	S.CER ECJ0EB1E102K	T	10.6/97.6
C17	4030017420	S.CER ECJ0EC1H470J	B	38.8/96.6
C18	4030017420	S.CER ECJ0EC1H470J	B	33.7/96.6
C19	4030017640	S.CER ECJ0EC1H150J	B	38.9/78.4
C20	4030016930	S.CER ECJ0EB1A104K	B	24.9/60.4
C21	4030017460	S.CER ECJ0EB1E102K	B	35.6/73.6
C22	4030017350	S.CER ECJ0EC1H020B	B	38.2/76
C23	4030016790	S.CER ECJ0EB1C103K	B	46.3/75
C24	4030017730	S.CER ECJ0EB1E471K	B	46.3/79.2
C25	4030018870	S.CER ECJ0EF0J105Z	B	46.3/81
C26	4030016930	S.CER ECJ0EB1A104K	T	10.9/100.2
C27	4030017460	S.CER ECJ0EB1E102K	T	44.7/6.5
C29	4030017420	S.CER ECJ0EC1H470J	B	.9/55
C31	4030017460	S.CER ECJ0EB1E102K	B	19.3/89
C32	4030017460	S.CER ECJ0EB1E102K	B	31.7/88.9
C34	4030017460	S.CER ECJ0EB1E102K	B	32.6/88.9
C35	4030016930	S.CER ECJ0EB1A104K	B	14.9/95.1
C36	4030018860	S.CER ECJ0EB0J105K	B	34.5/91.1
C37	4030018520	S.CER C1608 JB 0J 225M-T	B	33.7/88.4
C42	4510009870	S.ELE 10 CE 100 LD	B	20.3/96.4
C43	4030017460	S.CER ECJ0EB1E102K	B	34.5/92.9
C51	4030016930	S.CER ECJ0EB1A104K	B	6.4/91.1
C53	4550007700	S.TAN TEESVP 1C 225M8R	B	21.9/77
C54	4550007700	S.TAN TEESVP 1C 225M8R	B	20.2/76.6
C58	4550007700	S.TAN TEESVP 1C 225M8R	B	18.4/77.3
C59	4550007700	S.TAN TEESVP 1C 225M8R	B	16.7/78
C61	4550007690	S.TAN TEESVP 1C 105M8R	B	11.6/87.7
C62	4550007690	S.TAN TEESVP 1C 105M8R	B	11.6/86
C64	4550007690	S.TAN TEESVP 1C 105M8R	B	11.6/84.2
C66	4550007690	S.TAN TEESVP 1C 105M8R	B	11.6/82.5
C67	4550007690	S.TAN TEESVP 1C 105M8R	B	11.6/80.7
C68	4030017460	S.CER ECJ0EB1E102K	B	35.7/37.6
C70	4550006880	S.TAN TEESVD2 0J 157M12R	B	6.9/94.2
C71	4030017460	S.CER ECJ0EB1E102K	B	36.1/38.8
C73	4030016930	S.CER ECJ0EB1A104K	B	2.9/81.3
C74	4030016950	S.CER ECJ0EB1A473K	B	3.2/91.1
C75	4030017460	S.CER ECJ0EB1E102K	B	40.4/38.3
C76	4030017460	S.CER ECJ0EB1E102K	B	0.6/79.5
C77	4550007090	S.TAN TEESVA 1A 226M8R	B	8.9/82.6
C78	4550007090	S.TAN TEESVA 1A 226M8R	B	41.7/36.3
C79	4550007090	S.TAN TEESVA 1A 226M8R	B	30/41.2
C80	4030017460	S.CER ECJ0EB1E102K	B	28.5/42.3
C81	4030018860	S.CER ECJ0EB0J105K	B	7.3/80.1
C82	4550007090	S.TAN TEESVA 1A 226M8R	B	5/72.2
C83	4030016930	S.CER ECJ0EB1A104K	B	6.6/81.3
C84	4550000730	S.TAN TEESVA 0J 225M8R	B	1.3/85.1
C85	4030017460	S.CER ECJ0EB1E102K	B	27/45.2
C87	4030016930	S.CER ECJ0EB1A104K	B	24.3/16.3
C88	4030017460	S.CER ECJ0EB1E102K	B	34.3/39.7
C89	4030017460	S.CER ECJ0EB1E102K	B	27/46.2
C90	4030017760	S.CER ECJ0EB1H222K	B	26/42.7
C92	4030016930	S.CER ECJ0EB1A104K	B	11.3/48.2
C93	4030019500	S.CER GRM21BB31A106KE18	B	41.9/43.6
C94	4030019500	S.CER GRM21BB31A106KE18	B	41.9/41.8
C95	4030016970	S.CER ECJ0EB1C223K	B	26/41.8
C98	4030016930	S.CER ECJ0EB1A104K	B	12.3/54.2
C99	4030016930	S.CER ECJ0EB1A104K	B	5/82.2
C101	4030018860	S.CER ECJ0EB0J105K	B	9.5/51.9
C102	4030019500	S.CER GRM21BB31A106KE18	B	37/41.8
C103	4030019500	S.CER GRM21BB31A106KE18	B	35.3/41.8
C104	4030016930	S.CER ECJ0EB1A104K	B	21/37.4
C106	4030018860	S.CER ECJ0EB0J105K	B	14/50.4

[LOGIC UNIT]

REF NO.	PARTS NO.	DESCRIPTION	M.	H/V LOCATION
C108	4030017040	S.CER ECJ0EB1A333K	B	14/51.3
C109	4030017460	S.CER ECJ0EB1E102K	B	31.4/46
C111	4030016930	S.CER ECJ0EB1A104K	B	12.3/53.3
C112	4030016930	S.CER ECJ0EB1A104K	T	43.3/9.2
C114	4030017490	S.CER C1608 JB 1A 105K-T	B	23.8/51.4
C115	4030017510	S.CER ECJ0EC1H680J	B	5.9/36.1
C117	4030017040	S.CER ECJ0EB1A333K	B	17.3/53.7
C120	4030016930	S.CER ECJ0EB1A104K	B	14/53.3
C121	4030016930	S.CER ECJ0EB1A104K	B	14/52.4
C122	4030017490	S.CER C1608 JB 1A 105K-T	B	3.4/30.3
C123	4030017730	S.CER ECJ0EB1E471K	B	19.1/40.5
C124	4030017460	S.CER ECJ0EB1E102K	B	23.4/17.9
C125	4030016930	S.CER ECJ0EB1A104K	B	7.9/33.7
C126	4030017490	S.CER C1608 JB 1A 105K-T	B	8.7/29
C127	4030017490	S.CER C1608 JB 1A 105K-T	B	7.4/29
C128	4030017490	S.CER C1608 JB 1A 105K-T	B	3.4/27.7
C130	4030017730	S.CER ECJ0EB1E471K	B	17.8/52.5
C131	4030017490	S.CER C1608 JB 1A 105K-T	B	7.4/26.4
C133	4030017440	S.CER ECJ0EC1H221J	B	20.5/49.7
C134	4030017490	S.CER C1608 JB 1A 105K-T	B	3.4/25.1
C135	4030017460	S.CER ECJ0EB1E102K	B	24.8/44.2
C136	4030017430	S.CER ECJ0EC1H101J	B	19.1/43.2
C137	4030017490	S.CER C1608 JB 1A 105K-T	B	7.4/23.8
C138	4030017490	S.CER C1608 JB 1A 105K-T	B	3.4/22.5
C139	4030016780	S.CER ECJ0EB1C153K	B	16.7/40.5
C141	4030018100	S.CER ECJ0EB1H681K	B	22.3/52.4
C142	4030017490	S.CER C1608 JB 1A 105K-T	B	7.4/21.2
C143	4030017460	S.CER ECJ0EB1E102K	B	16.7/43.2
C144	4030017780	S.CER ECJ0EB1E472K	B	25.4/47.6
C147	4030018100	S.CER ECJ0EB1H681K	B	22.7/51.1
C148	4030018860	S.CER ECJ0EB0J105K	B	18.7/48.8
C149	4030008680	S.CER C2012 JF 1C 105Z-T	B	9/22.4
C155	4030017760	S.CER ECJ0EB1H222K	B	23.6/49.2
C156	4030017900	S.CER ECJ0EB1C123K	B	20/47.6
C157	4030016930	S.CER ECJ0EB1A104K	B	18.7/46.4
C158	4030019090	S.CER C2012 JB 1C 225M-T	B	6.9/19
C161	4030016790	S.CER ECJ0EB1C103K	B	21.8/47.6
C162	4030018860	S.CER ECJ0EB0J105K	B	20.9/47.6
C163	4030011600	S.CER C1608 JB 1E 104K-T	B	4/17.7
C164	4030017460	S.CER ECJ0EB1E102K	B	40.3/49.8
C165	4030016930	S.CER ECJ0EB1A104K	B	34.8/37.6
C166	4030019500	S.CER GRM21BB31A106KE18	B	31.2/44.6
C167	4030016930	S.CER ECJ0EB1A104K	B	33/37.6
C168	4030016930	S.CER ECJ0EB1A104K	B	31.3/47.6
C169	4030016930	S.CER ECJ0EB1A104K	B	33.7/34.7
C170	4030017460	S.CER ECJ0EB1E102K	B	38.2/50.8
C171	4030017460	S.CER ECJ0EB1E102K	B	43.2/55.1
C172	4030016930	S.CER ECJ0EB1A104K	B	38.2/51.7
C173	4030017460	S.CER ECJ0EB1E102K	B	19.6/17.9
C174	4030019500	S.CER GRM21BB31A106KE18	B	41.9/45.3
C175	4030017460	S.CER ECJ0EB1E102K	B	19.1/36.3
C178	4030016930	S.CER ECJ0EB1A104K	B	46.5/60.5
C179	4550007680	S.TAN TEESVP 0J 226M8R	B	36.1/77.5
C180	4030016930	S.CER ECJ0EB1A104K	B	34.4/75
C182	4030018860	S.CER ECJ0EB0J105K	B	8.6/75.9
C183	4030016930	S.CER ECJ0EB1A104K	B	8.6/79
C184	4030017460	S.CER ECJ0EB1E102K	B	45.7/48.5
C185	4030017480	S.CER C1608 JB 1A 474K-T	B	43.1/48.9
C186	4030019500	S.CER GRM21BB31A106KE18	B	39.9/52.2
C187	4030017790	S.CER ECJ0EB1E682K	B	11/47
C188	4030017790	S.CER ECJ0EB1E682K	B	4.2/47.2
C189	4030017920	S.CER ECJ0EB1A683K	B	5.8/52.4
C190	4030017920	S.CER ECJ0EB1A683K	B	7.4/52.4
C191	4030016930	S.CER ECJ0EB1A104K	B	11.3/49.1
C192	4030016930	S.CER ECJ0EB1A104K	B	3/51.9
C193	4030018860	S.CER ECJ0EB0J105K	B	1.2/51.5
C194	4340000450	S.MYL ECPU1C105MA5	B	13.8/93.1
C195	4030019090	S.CER C2012 JB 1C 225M-T	B	6.9/17.3
C197	4030017400	S.CER ECJ0EC1H220J	B	21.7/68.3
C198	4030016930	S.CER ECJ0EB1A104K	B	6.7/59.6
C199	4030017460	S.CER ECJ0EB1E102K	B	19.4/73
C201	4030017460	S.CER ECJ0EB1E102K	B	9.6/72.9
C202	4030017460	S.CER ECJ0EB1E102K	B	8.3/73.6
C203	4030017460	S.CER ECJ0EB1E102K	B	8.6/75
J5	6510021901	S.CON BM02B-ASRS-TF(LF)(SN)	T	43.6/3.3
J6	6510025170	S.CON IMSA-9631S-27Y-921	B	23.8/82.9
J7	6510026690	S.CON AXK4S50535G	B	12.4/63.7
DS10	5040003010	S.LED SML-A12WT	T	11.5/95
DS11	5040003010	S.LED SML-A12WT	T	23.8/95
DS12	5040003010	S.LED SML-A12WT	T	36.1/95
DS13	5030003080	LCD KMC9864-A00-SPI <VKH>		
S21	7600000210	ENC TP70N00E20-15F-1903		
EP1	6910018460	S.BEA MMZ1005Y102C-T	B	37.9/96.6
EP2	6910018460	S.BEA MMZ1005Y102C-T	B	34.6/96.6
EP8	3310003010	ANT KY-058-006-2 <KAI>		
EP9	6910014690	S.BEA MPZ1608S221A-T	B	29/36.3
EP10	6910014690	S.BEA MPZ1608S221A-T	B	15.3/37.1
EP13	6910018460	S.BEA MMZ1005Y102C-T	B	15.8/75.2
EP15	6910018460	S.BEA MMZ1005Y102C-T	B	34.9/75.8

M.=Mounted side (T: Mounted on the Top side, B: Mounted on the Bottom side)
S.=Surface mount

ManualsPlus.com

SECTION 6 MECHANICAL PARTS

[CHASSIS PARTS]

REF NO.	ORDER NO.	DESCRIPTION	QTY.
J1	6910020160	3076 SMA	1
SP1	2510001490	362P0801	1
W1	8900016000	OPC-1129A	1
MP1	8210024920	3076 FRONT PANEL (Incl. MP15)	1
MP2	8210024870	3076 REAR PANEL	1
MP3	8110009570	3076 BATT COVER	1
MP4	8930076050	3076 LOCK PLATE	1
MP5	8310072210	3076 WINDOW PLATE	1
MP6	8930076060	3076 JACK CAP	1
MP7	8610013760	KNOB N-377 (Incl. MP23)	1
MP8	8930077390	3076 KEYBOARD (A)	1
MP9	8930076290	3076 DETECT BUTTON	1
MP10	8930076300	3076 MAIN SEAL	1
MP11	8930077170	3076 REAR SEAL	1
MP12	8930076320	3076 ANT RUBBER	1
MP13	8930076360	3076 TOP PLATE	1
MP14	8930076600	3076 WINDOW SHEET	1
MP15	8930076620	3076 SP NET	1
MP16	8930067890	2869 PLUS TERMINAL	2
MP17	8930066800	O-RING (BE)	1
MP18	8930059610	SPONGE (HC)	2
MP19	8930051390	2304 SHAFT	1
MP20	8930030920	1301 SHEET	1
MP21	8830000881	VR NUT (I)-1	1
MP22	8830001470	VR NUT (N)	1
MP23	8610007510	KNOB SPRING NO.7800	1
MP24	8810008751	SCREW BT B0 2X15NI-ZK3 (BT)	2
MP25	8810009221	SCREW BT B0 2X8 NI-ZK3 (BT)	2
MP26	8810008641	0TAP 1FLAT WASHER B0 2X4 NI-ZC3 (BT)	8
MP27	8810000101	SCREW PH M2X4 ZK3	1
MP28	8810006791	SCREW PH M2X3.5 ZK3	2
MP29	8510019060	3076 EARTH PLATE	1
MP30	8930062950	SHIELD SPONGE (AF)	1
MP31	8930061120	SHIELD SPONGE (AA)	1
MP32	8930076960	3076 VOL RUBBER	1
MP33	8930076530	3076 SHEET	1
MP34	8930069710	THERMALLY SHEET (BC)	1
MP35	8930076700	INSULATION SHEET (MI)	1
MP38	8930077330	3076 MAGNETIC SHIELD	1

[LOGIC UNIT]

REF NO.	ORDER NO.	DESCRIPTION	QTY.
J5	6510021901	BM02B-ASRS-TF (LF) (SN)	1
J6	6510025170	IMSA-9631S-27Y921	1
J7	6510026690	AXK4S50535G	1
DS13	5030003080	KMC9864-A-00-SPI	1
S21	7600000210	TP70N00E2015F-1903	1
EP8	3310003010	KY-058-006-2	1
MP1	8210024910	3076 REFLECTOR	1
MP2	8930076310	3076 LCD HOLDER	1
MP3	8930076690	3076 WHITE SHEET	1
MP4	8930064320	SPONGE (HW)	1
MP5	8930039831	THERMALLY SHEET (D)-1	1
MP6	8930076830	3076 DCDC SHIELD	1
MP7	8510019070	3076 LOGIC SHIELD	1

[MAIN UNIT]

REF NO.	ORDER NO.	DESCRIPTION	QTY.
J1	6510024970	AXK5F16535YJ	1
J2	6510024970	AXK5F16535YJ	1
J3	6510026700	AXK3S50335G	1
J4	6450002250	HSJ1456-010320	1
J5	6450002131	04-730A3-02BKA	1
MP1	8930076971	3076 MAIN SHIELD-1	1
MP2	8930077190	3076 VCO SHEET	1
MP3	8930076930	INSULATION SHEET (MH)	1

[1st VCO UNIT]

REF NO.	ORDER NO.	DESCRIPTION	QTY.
J1	6510024980	AXK6F16335YJ	1
MP1	8510019050	3076 A-VCO CASE	1
MP2	8510019090	3076 VCO PLATE	1

[2nd VCO UNIT]

REF NO.	ORDER NO.	DESCRIPTION	QTY.
J1	6510024980	AXK6F16335YJ	1
MP1	8510019030	3076 B-VCO CASE	1

[ACCESSORIES]

REF NO.	ORDER NO.	DESCRIPTION	QTY.
EP1**	–	BP-244 EXP	1
EP2**	–	BC-149D [EUR-02]	1
	–	BC-149A [USA-01]	1
	–	BC-149A [EXP-01]	1
	–	BC-149D [CHN-01]	1
	–	BC-149A [CAN]	1
EP3**	–	FA-S270C	1
MP1**	–	MB-112G	1
MP2	8010018080	STRAP HK-009	1

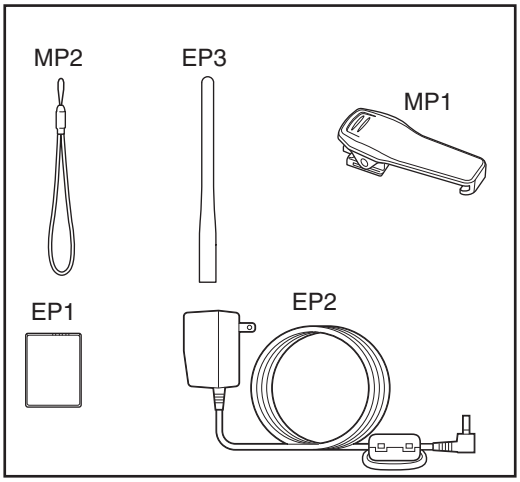

*: Refer to "**BOARD LAYOUTS**."
**: Available as an optional product.
Screw abbreviations A, B0, BT: Self-tapping PH: Pan head ZK: Black NI-ZU: Nickel-Zinc SUS: Stainless

ManualsPlus.com

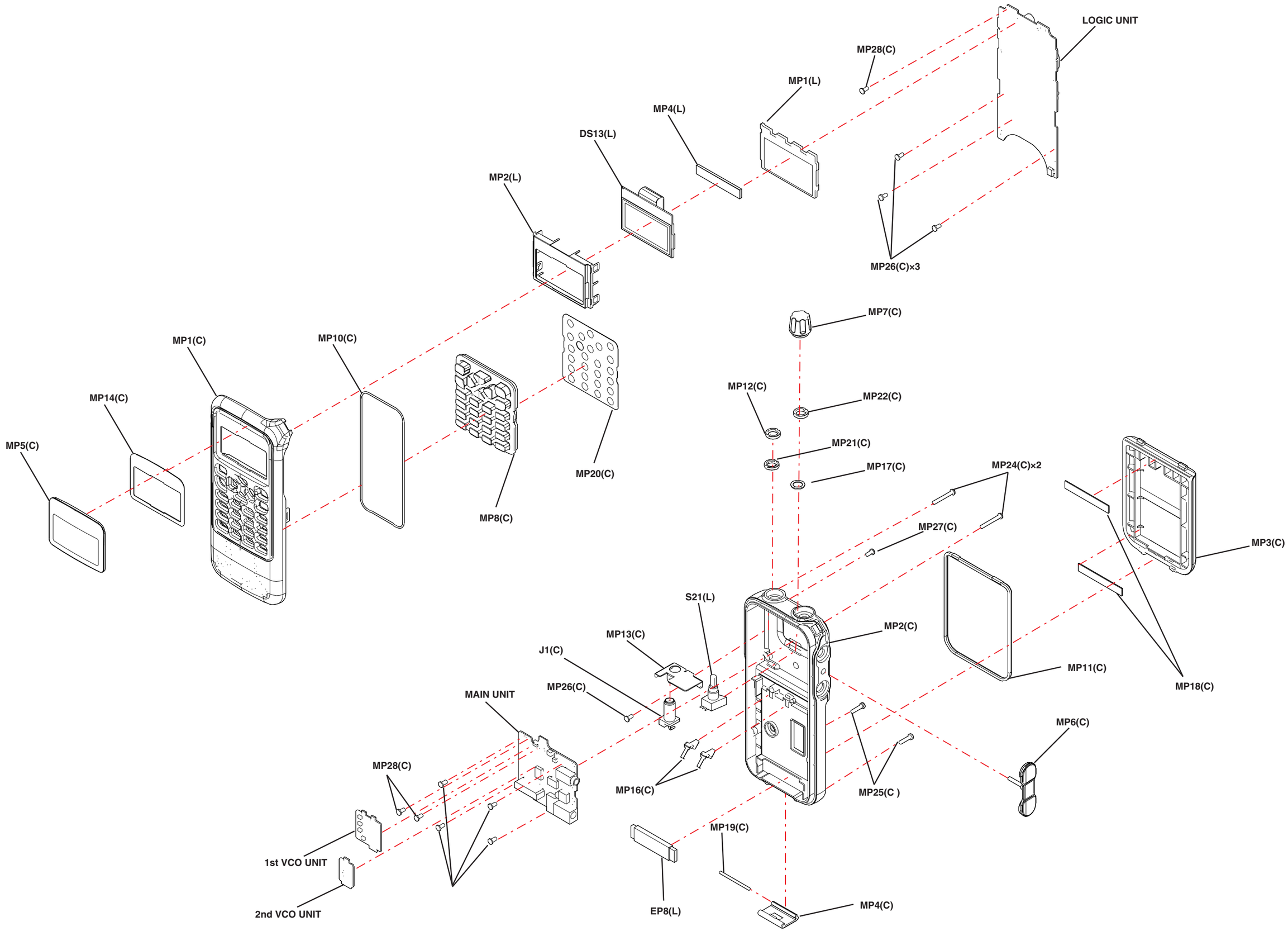

ManualsPlus.com

• MAIN UNIT
(TOP VIEW)

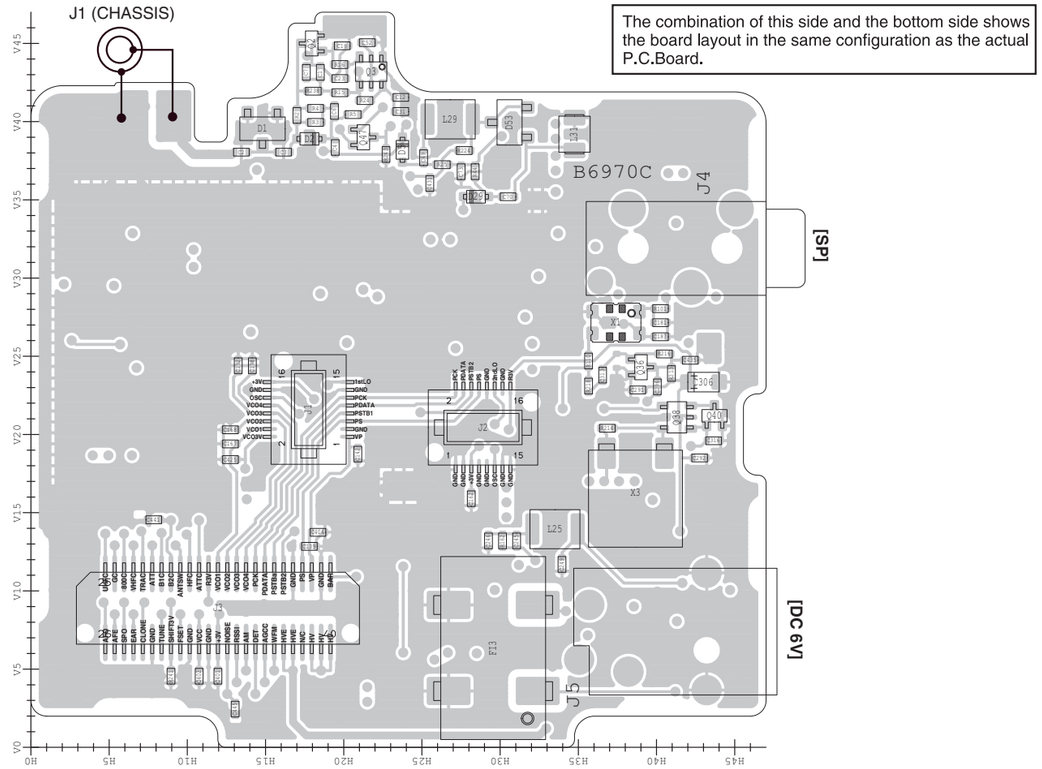

• 1st VCO UNIT
(TOP VIEW)

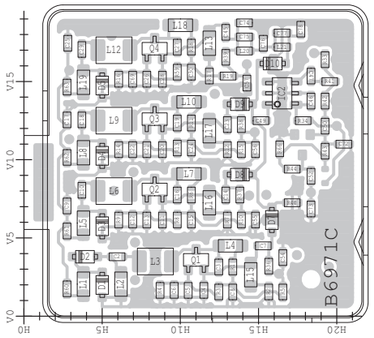

• 2nd VCO UNIT
(TOP VIEW)

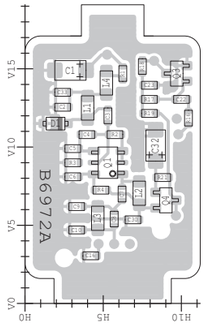

• LOGIC UNIT
(TOP VIEW)

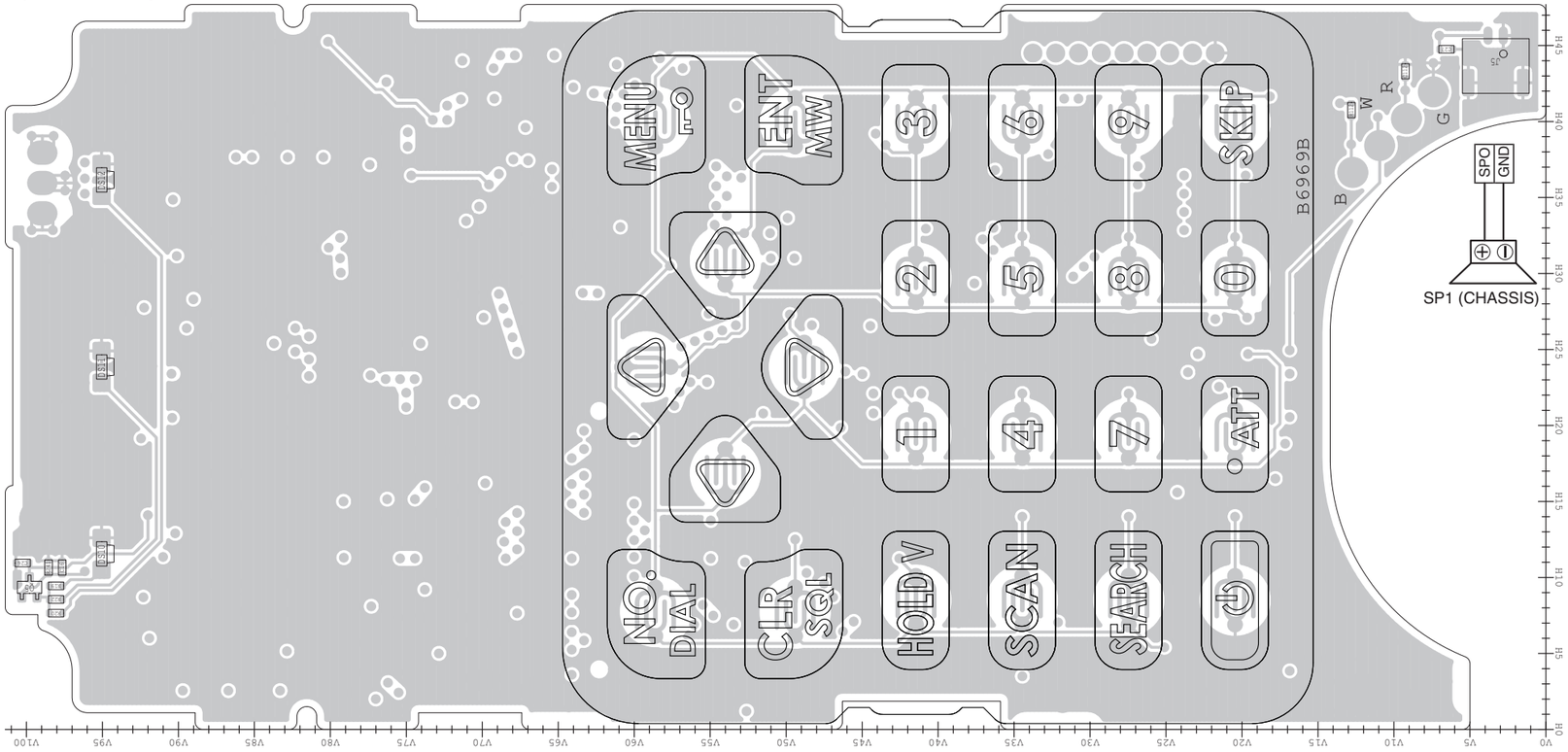

ManualsPlus.com

The combination of this side and the bottom side shows the board layout in the same configuration as the actual P.C.Board.

• MAIN UNIT (TOP VIEW)

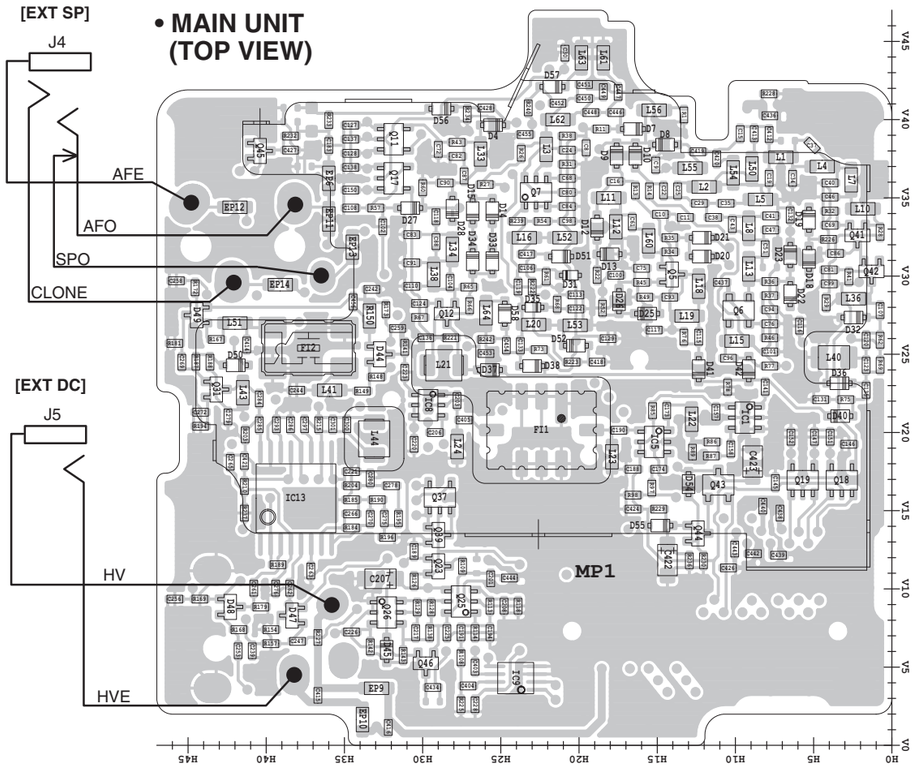

• 2nd VCO UNIT (TOP VIEW)

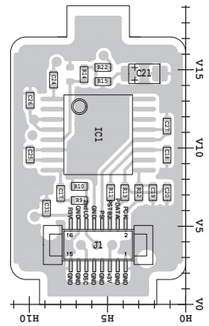

• 1st VCO UNIT (TOP VIEW)

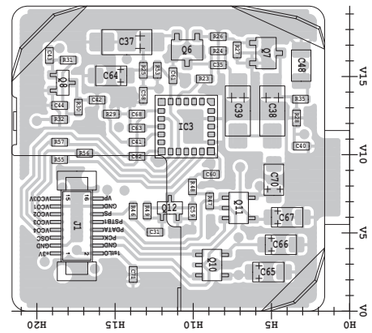

• LOGIC UNIT (TOP VIEW)

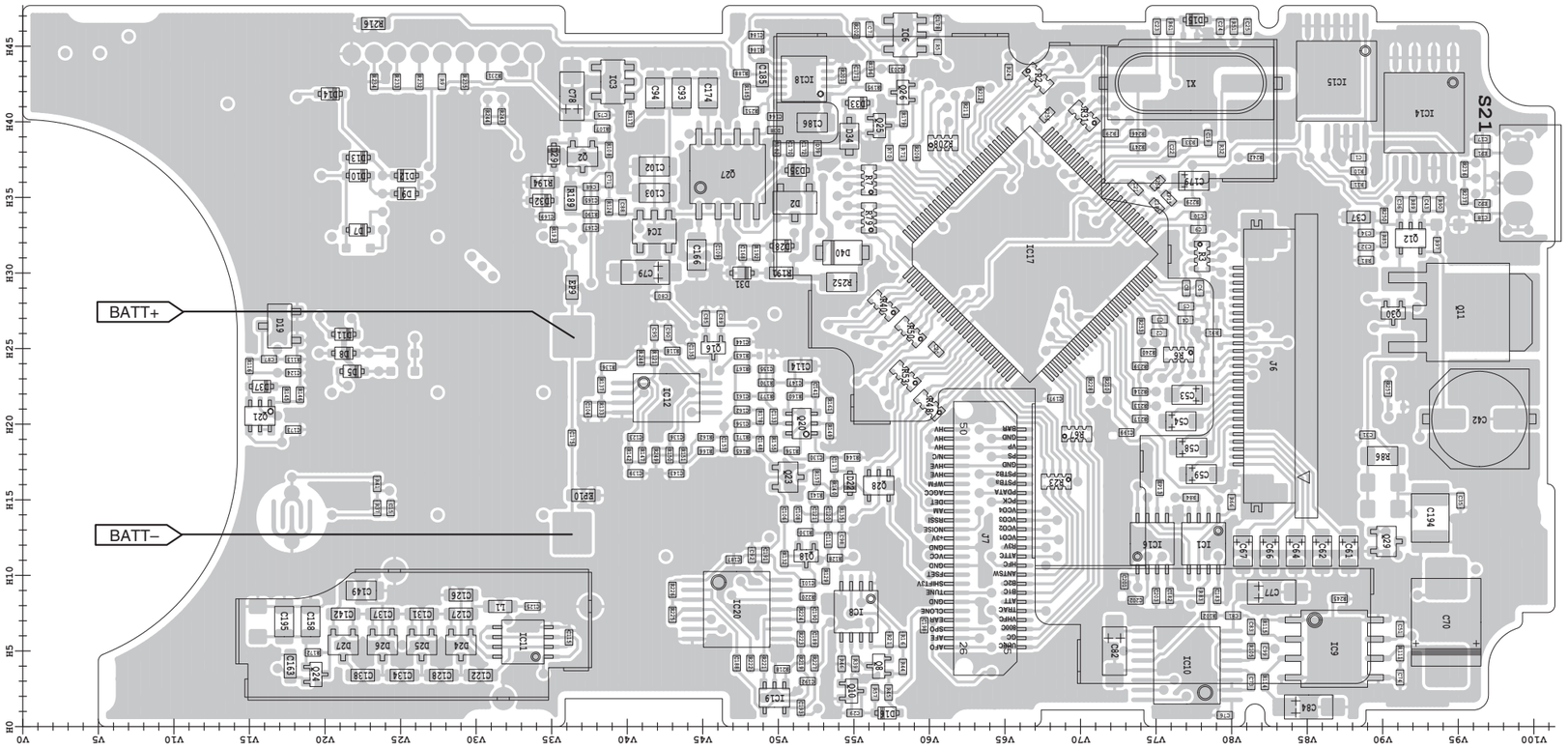

ManualsPlus.com

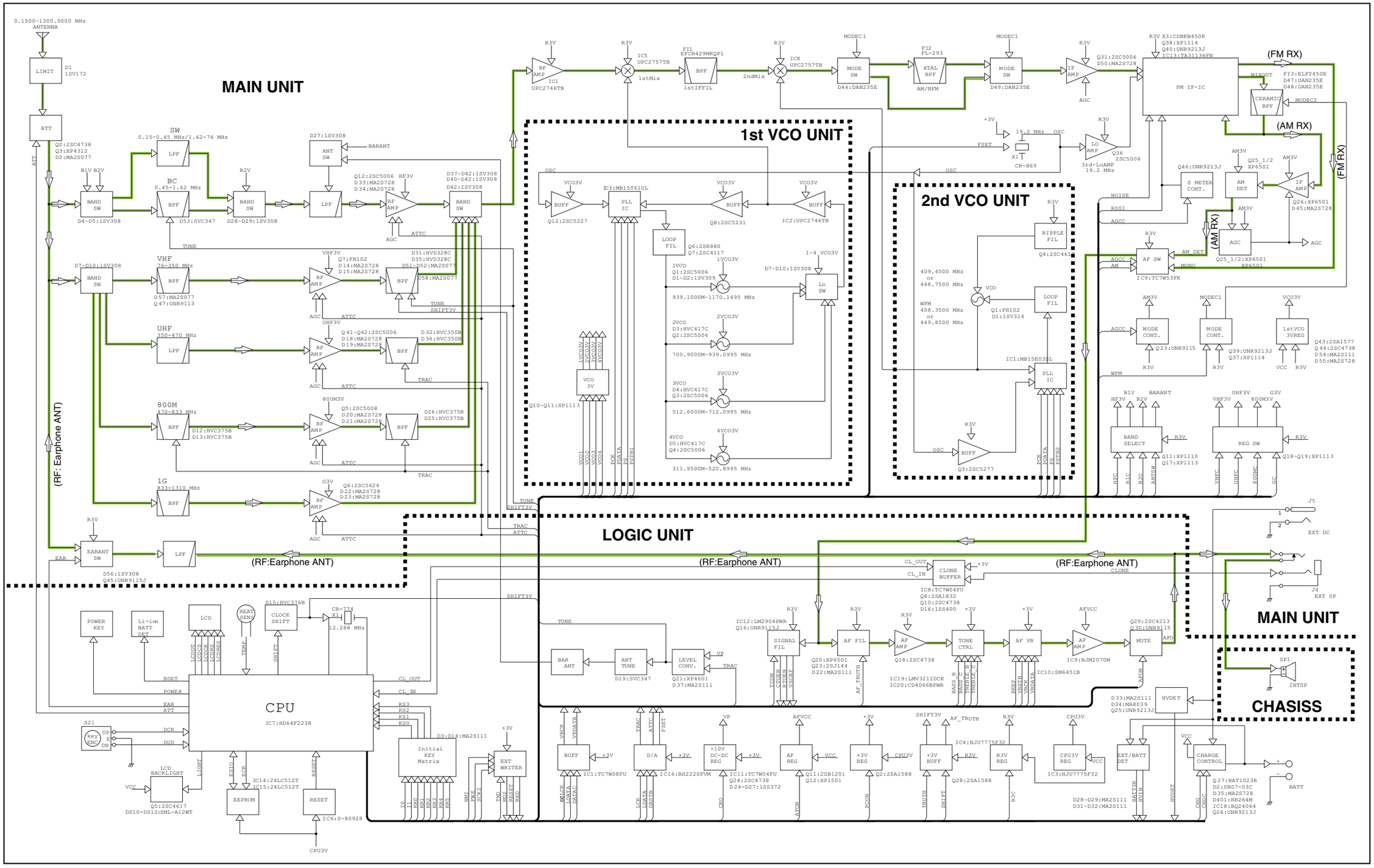

ManualsPlus.com

• LOGIC UNIT (Left side)

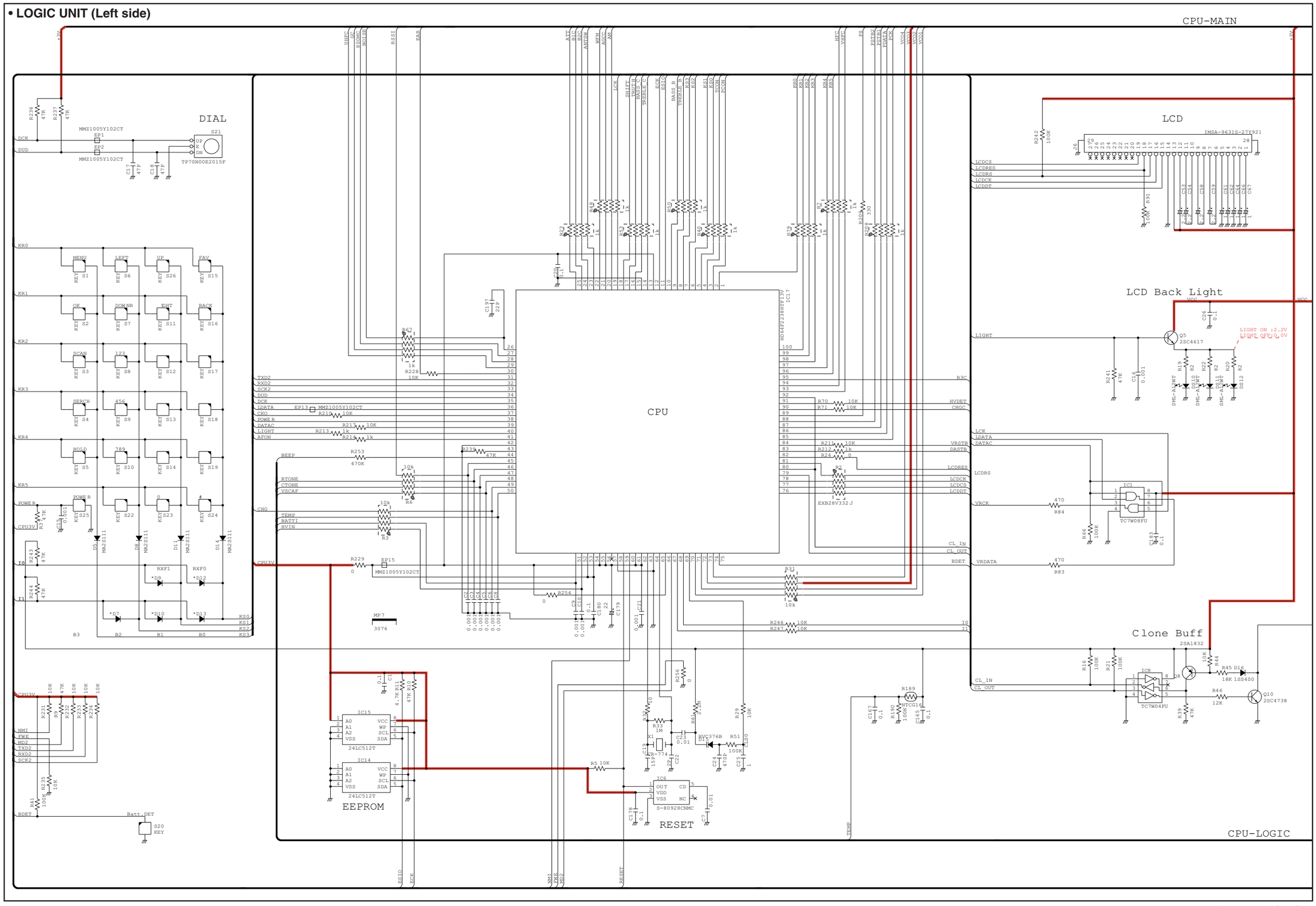

*; Refer to "PARTS LIST."

ManualsPlus.com

• **LOGIC UNIT (Right side)**

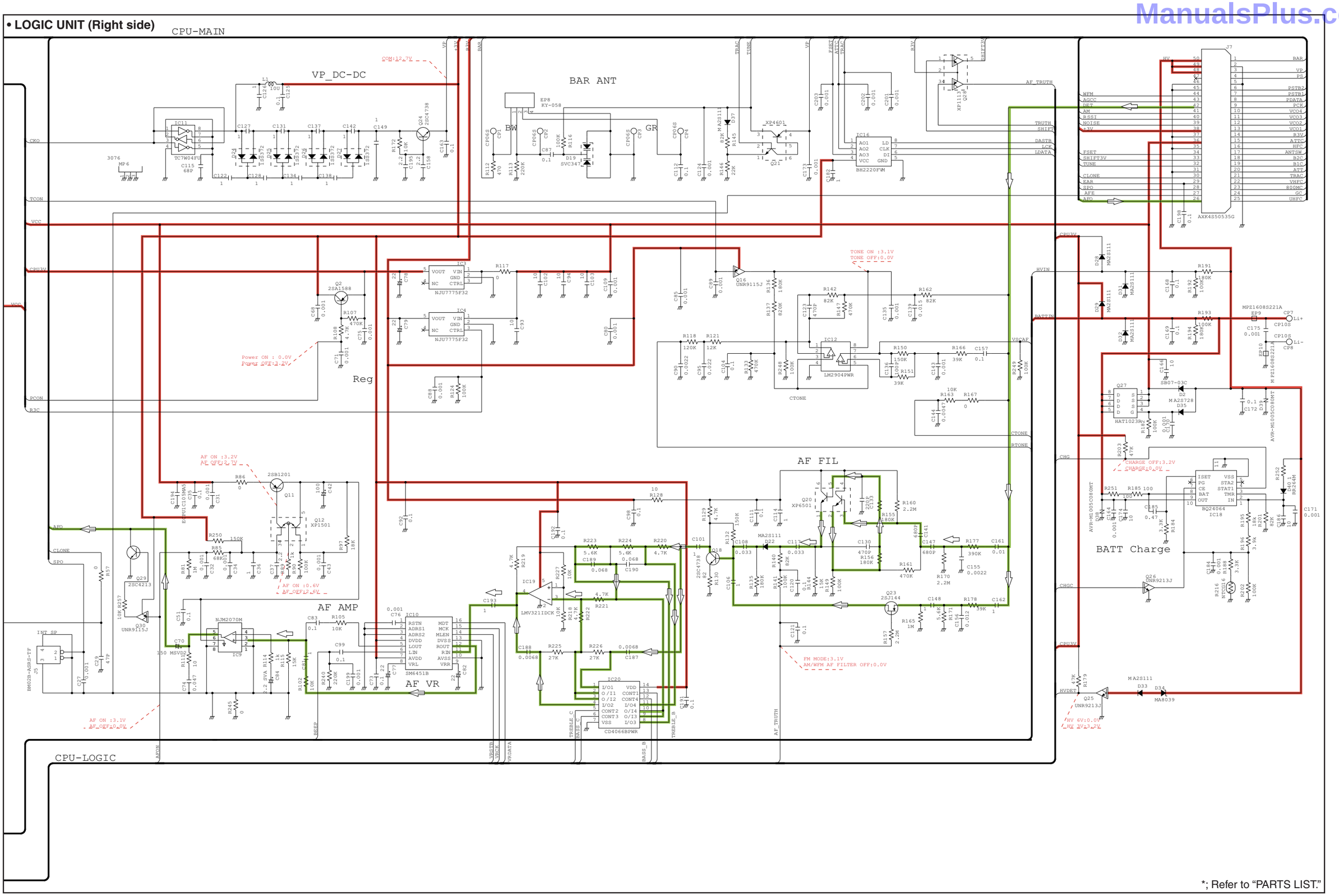

*; Refer to "PARTS LIST."

ManualsPlus.com

• MAIN UNIT (Left side)

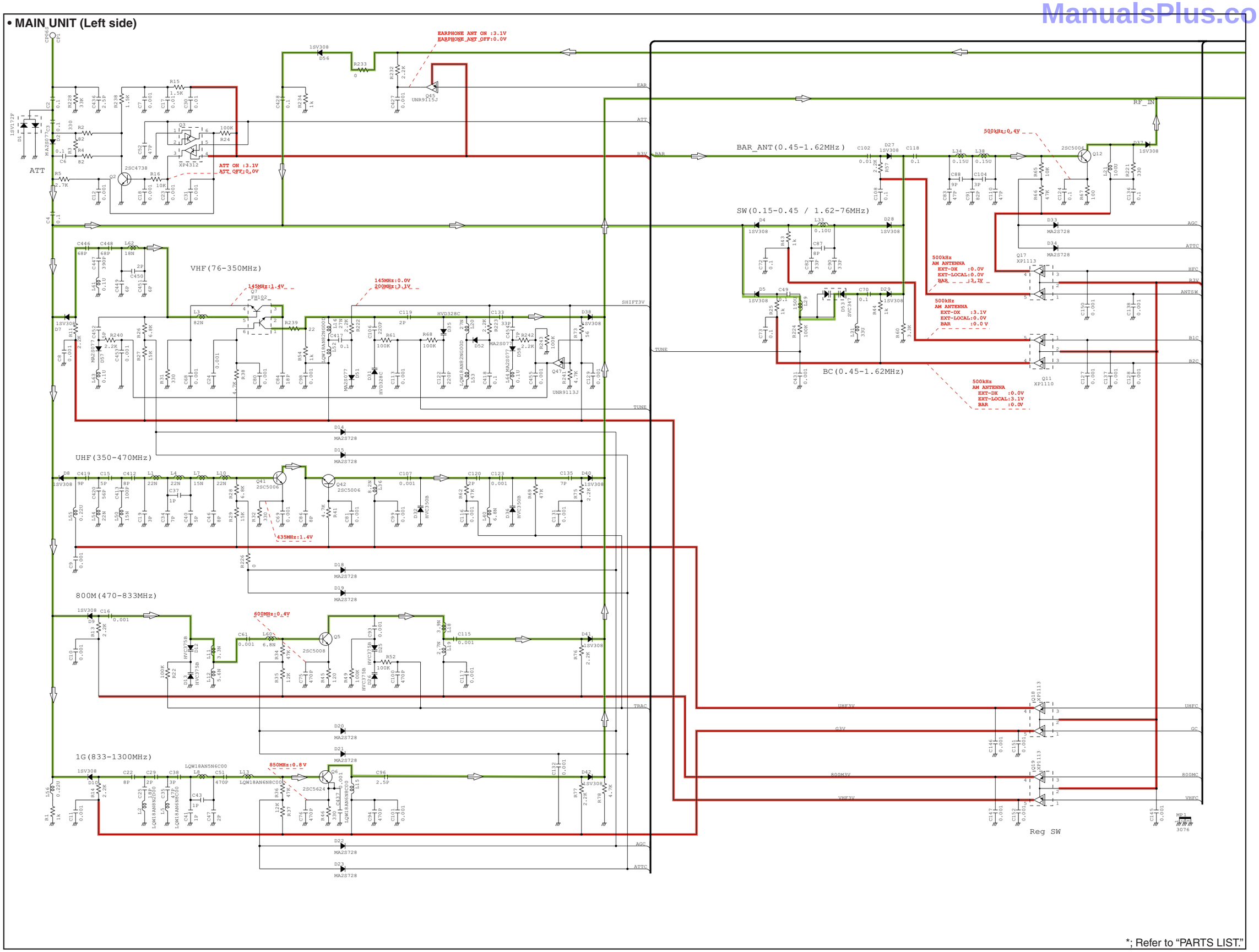

*; Refer to "PARTS LIST."

ManualsPlus.com

• **MAIN UNIT (Right side)**

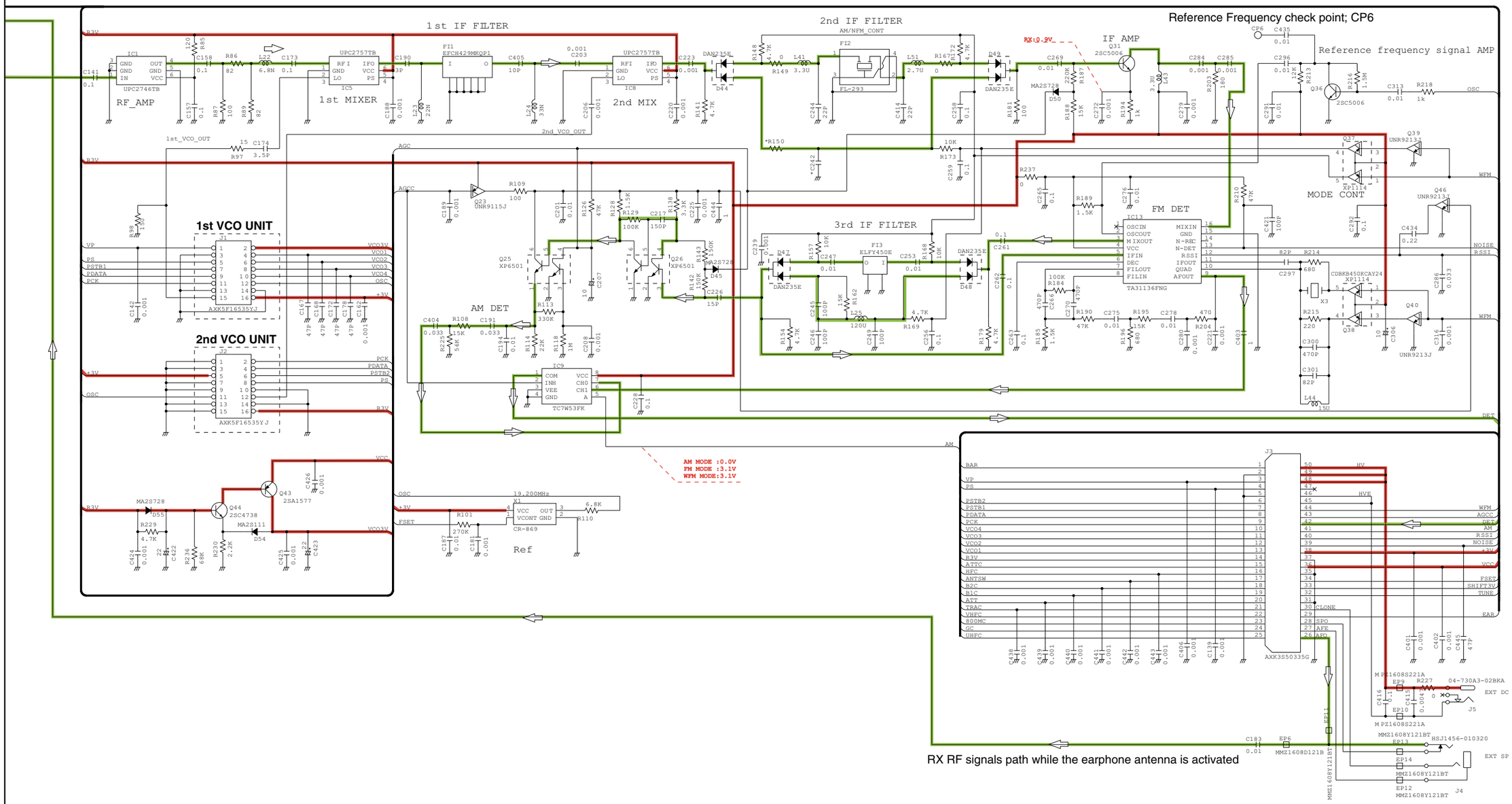

RX RF signals path while the earphone antenna is activated

*; Refer to "PARTS LIST."

ManualsPlus.com

• 1st VCO UNIT

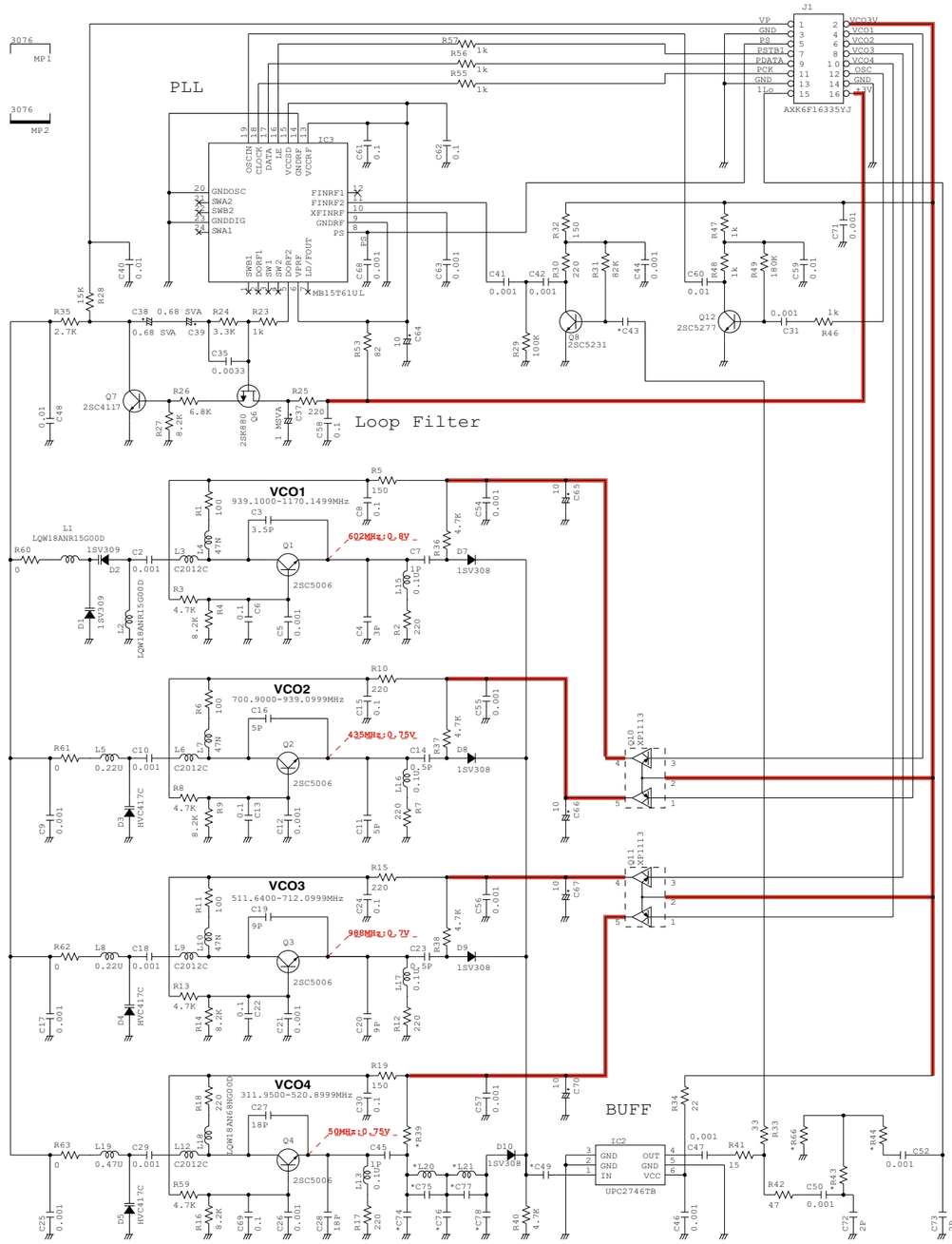

*; Refer to "PARTS LIST."

• 2nd VCO UNIT

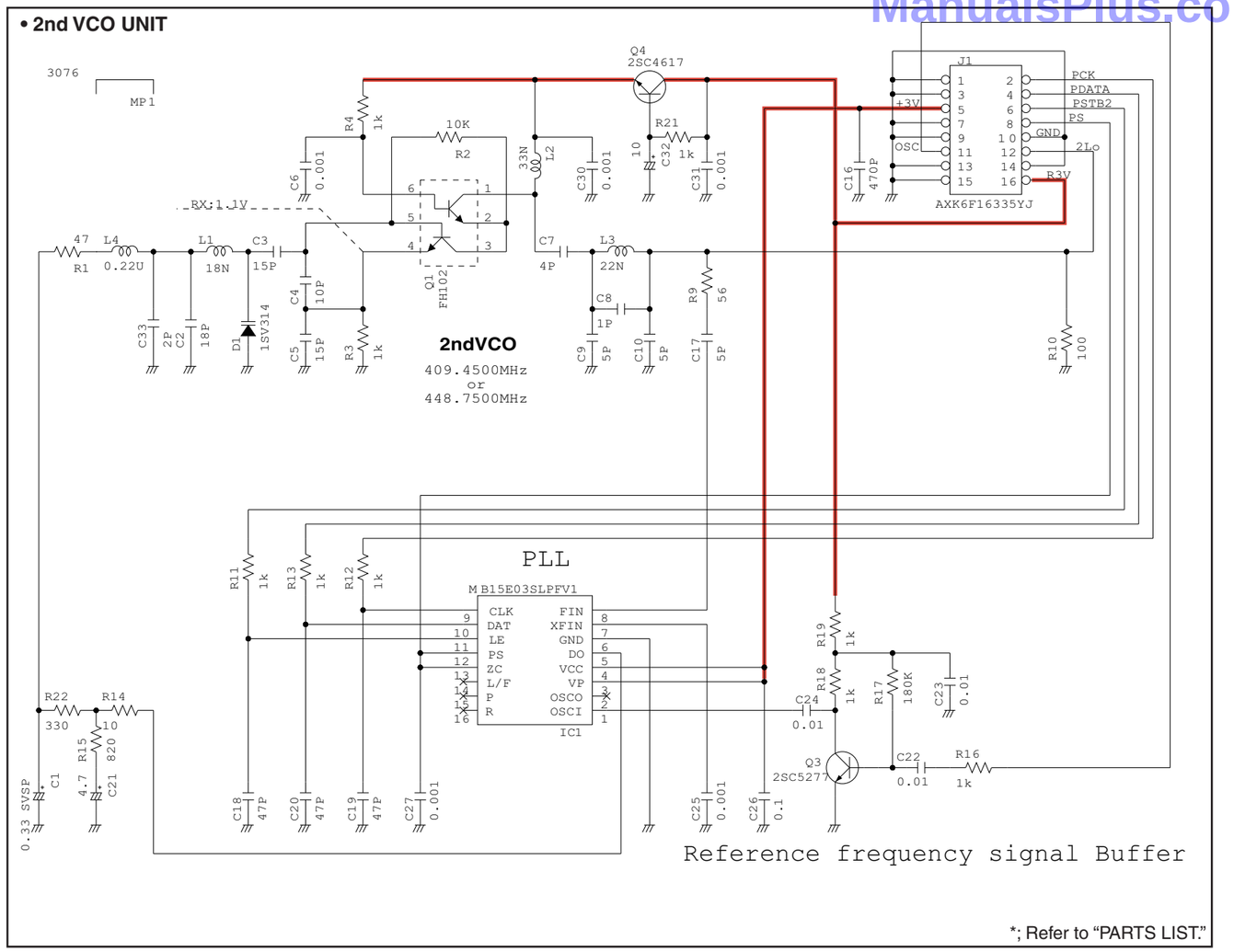

*; Refer to "PARTS LIST."

ManualsPlus.com

Icom Inc.

1-1-32, Kamiminami, Hirano-ku, Osaka 547-0003, Japan
Phone : +81 (06) 6793 5302
Fax : +81 (06) 6793 0013
URL : http://www.icom.co.jp/world/index.html

Icom America Inc.
<Corporate Headquarters>
2380 116th Avenue N.E., Bellevue, WA 98004, U.S.A.
Phone : +1 (425) 454-8155 Fax : +1 (425) 454-1509
URL : http://www.icomamerica.com
E-mail : sales@icomamerica.com
<Customer Service>
Phone : +1 (425) 454-7619

Icom Canada
Glenwood Centre #150-6165
Highway 17 Delta, B.C., V4K 5B8, Canada
Phone : +1 (604) 952-4266 Fax : +1 (604) 952-0090
URL : http://www.icomcanada.com
E-mail : info@icomcanada.com

Icom (Australia) Pty. Ltd.
Unit 1 / 103 Garden Road, Clayton VIC 3168 Australia
Phone : +61 (03) 9549-7500 Fax : +61 (03) 9549-7505
URL : http://www.icom.net.au
E-mail : sales@icom.net.au

Icom New Zealand
146A Harris Road, East Tamaki,
Auckland, New Zealand
Phone : +64 (09) 274 4062 Fax : +64 (09) 274 4708
URL : http://www.icom.co.nz
E-mail : inquiries@icom.co.nz

Beijing Icom Ltd.
10C07, Long silver Mansion, No.88, Yong Ding
Road, Haidian District, Beijing, 100039, China
Phone : +86 (010) 5889 5391/5392/5393
Fax : +86 (010) 5889 5395
E-mail : bjicom@bjicom.com
URL : http://www.bjicom.com

Icom (Europe) GmbH
Communication Equipment
Himmelgeister Str. 100, D-40225 Düsseldorf, Germany
Phone : +49 (0211) 346047 Fax : +49 (0211) 333639
URL : http://www.icomeurope.com
E-mail : info@icomeurope.com

Icom Spain S.L
Ctra. Rubi, No. 88 Bajos A 08174, Sant Cugat del Valles, Barcelona, Spain
Phone : +34 (93) 590 26 70 Fax : +34 (93) 589 04 46
URL : http://www.icomspain.com
E-mail : icom@icomspain.com

Icom (UK) Ltd.
Unit 9, Sea St., Herne Bay, Kent, CT6 8LD, U.K.
Phone : +44 (01227) 741741 Fax : +44 (01227) 741742
URL : http://www.icomuk.co.uk
E-mail : info@icomuk.co.uk

Icom France s.a.s.
Zac de la Plaine
1 Rue Brindejonc des Moulinais BP 5804
31505 Toulouse Cedex, France
Phone : +33 (5) 61 36 03 03 Fax : +33 (5) 61 36 03 00
URL : http://www.icom-france.com
E-mail : icom@icom-france.com

Asia Icom Inc.
6F No.68, Sec. 1 Cheng-Teh Road, Taipei, Taiwan, R.O.C.
Phone : +886 (02) 2559 1899 Fax : +886 (02) 2559 1874
URL : http://www.asia-icom.com
E-mail : sales@asia-icom.com

Icom Polska
81-850 Sopot, ul. 3 Maja 54, Poland
Phone : +48 (58) 550 7135 Fax : +48 (58) 551 0484
E-mail : icompolska@icompolska.com.pl

Count on us!

ManualsPlus.com

Icom Inc.
1-1-32, Kamiminami, Hirano-ku, Osaka 547-0003, Japan

S-14510XZ-C1
© 2008 Icom Inc.