5. TH-77A/77E BLOCK DIAGRAM

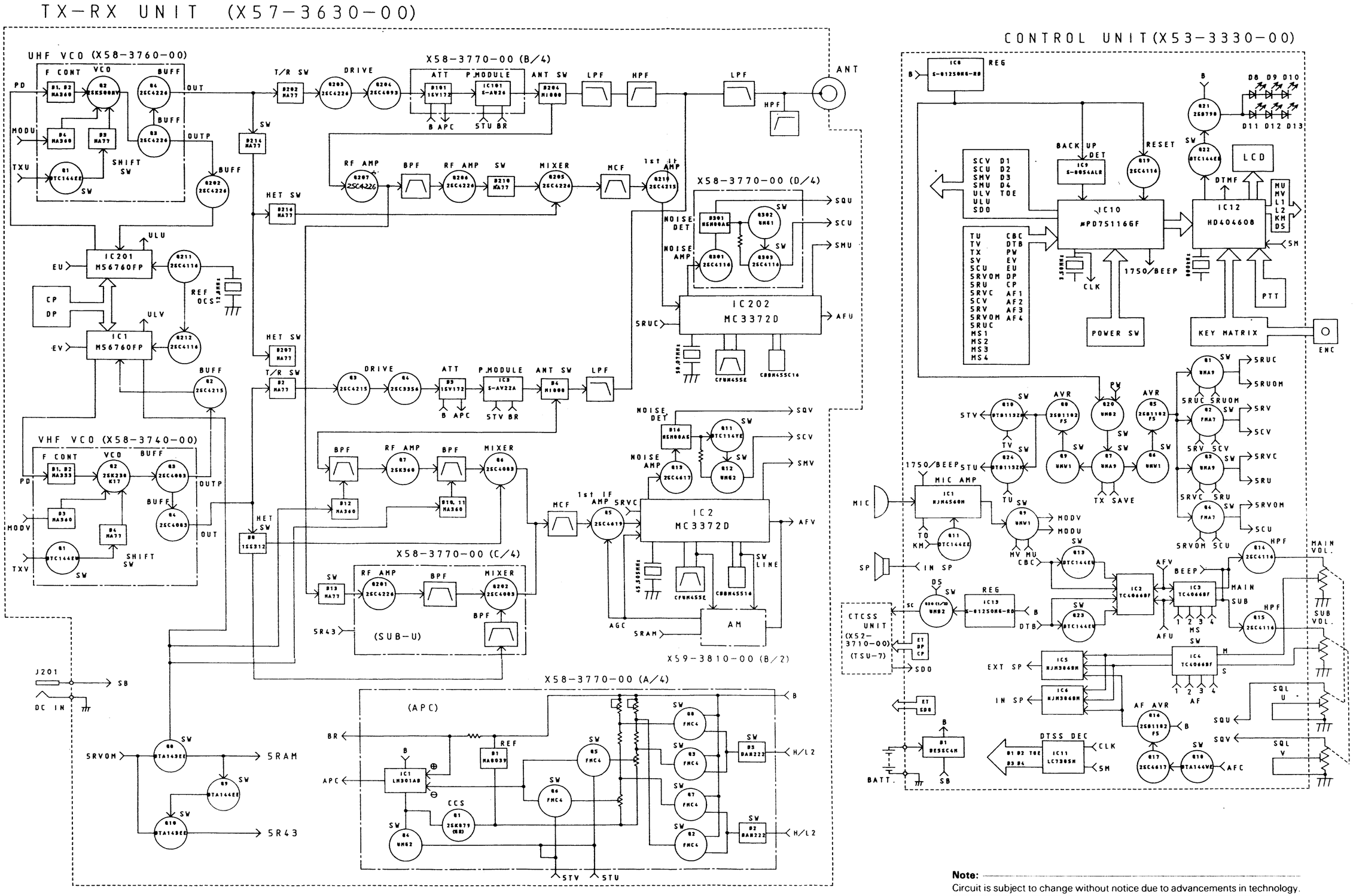

Note:
Circuit is subject to change without notice due to advancements in technology.

TH-77A/77E SCHEMATIC DIAGRAM

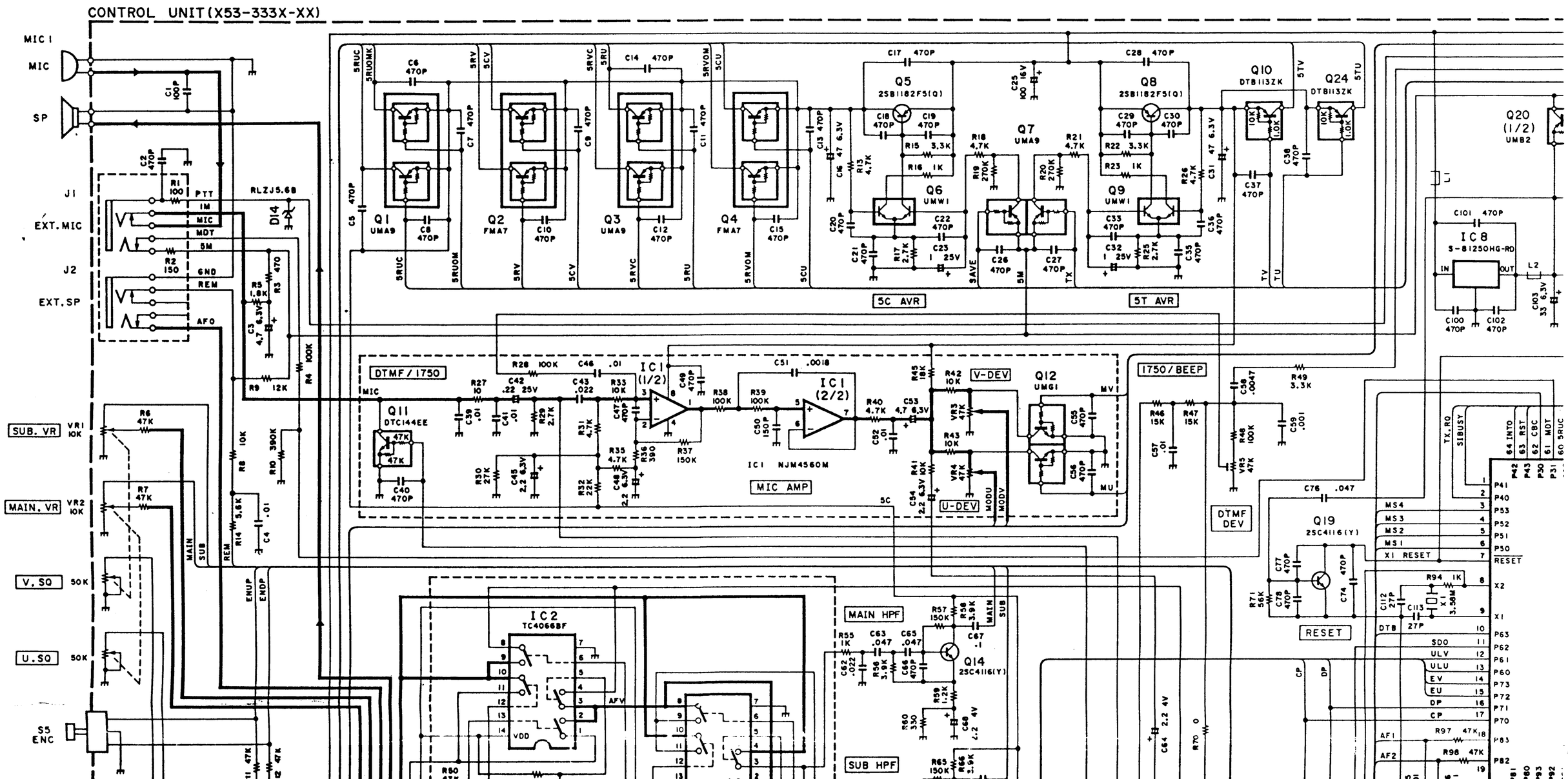

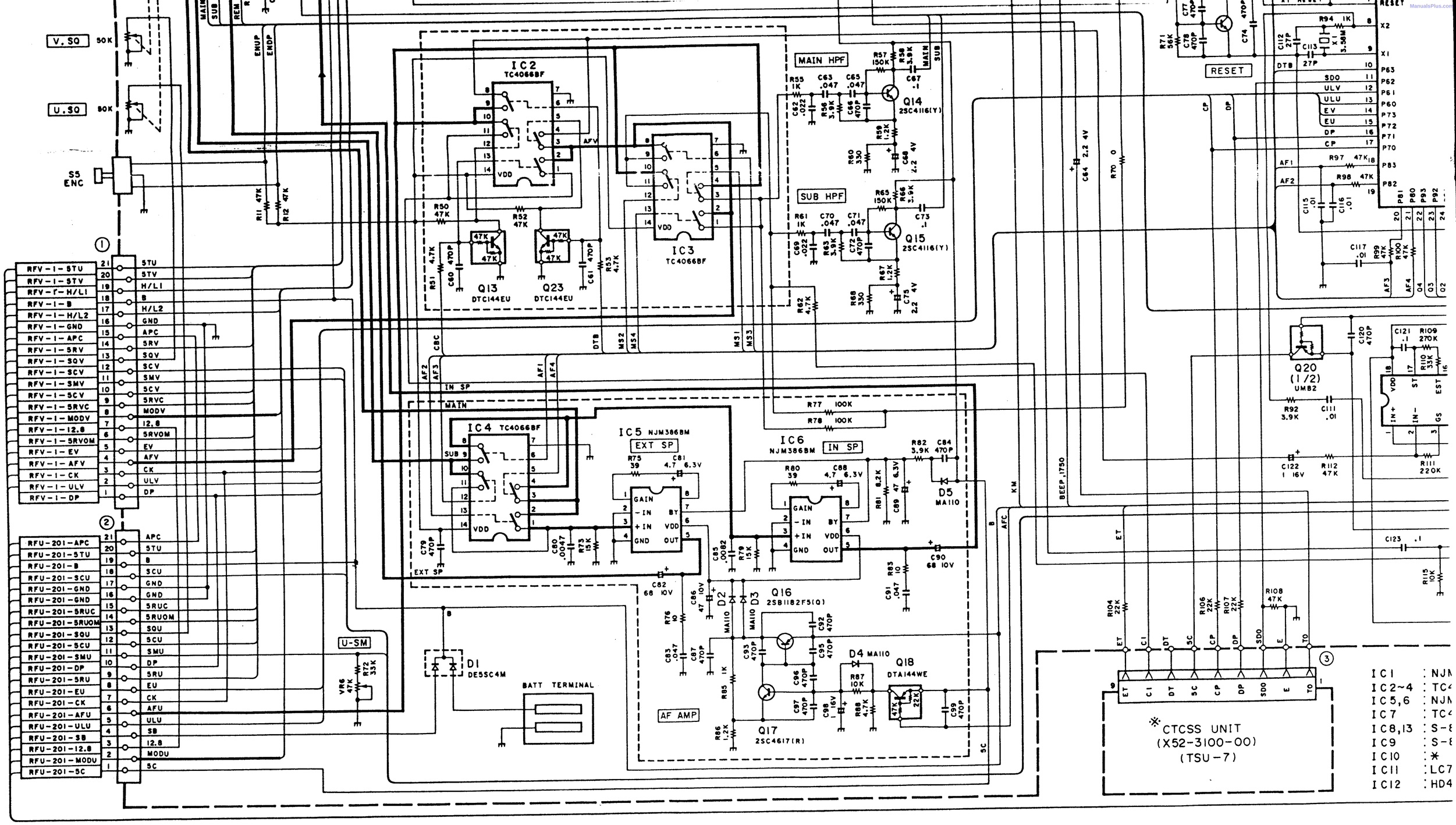
V.SQ
U.SQ
S5 ENC
IC2 TC4066BF
IC3 TC4066BF
IC4 TC4066BF
IC5 NJM386BM
IC6 NJM386BM
MAIN HPF
SUB HPF
Q14 2SC4116(Y)
Q15 2SC4116(Y)
Q13 DTC144EU
Q23 DTC144EU
RESET
Q20 (1/2) UMB2
Q16 2SB1182F5(Q)
Q17 2SC4617(R)
Q18 DTA144WE
D1 DE5SC4M
D5 MA110
BATT TERMINAL
U-SM
AF AMP
EXT SP
IN SP
MAIN
RFV-1-STU
RFV-1-STV
RFV-1-H/L1
RFV-1-B
RFV-1-H/L2
RFV-1-GND
RFV-1-APC
RFV-1-SRV
RFV-1-SQV
RFV-1-SCV
RFV-1-SMV
RFV-1-SCV
RFV-1-SRVC
RFV-1-MODV
RFV-1-12.8
RFV-1-SRVOM
RFV-1-EV
RFV-1-AFV
RFV-1-CK
RFV-1-ULV
RFV-1-DP
RFU-201-APC
RFU-201-STU
RFU-201-B
RFU-201-SCU
RFU-201-GND
RFU-201-GND
RFU-201-SRUC
RFU-201-SRUOM
RFU-201-SQU
RFU-201-SCU
RFU-201-SMU
RFU-201-DP
RFU-201-SRU
RFU-201-EU
RFU-201-CK
RFU-201-AFU
RFU-201-ULU
RFU-201-SB
RFU-201-12.8
RFU-201-MODU
RFU-201-SC
※CTCSS UNIT
(X52-3100-00)
(TSU-7)
IC1 : NJM
IC2~4 : TC4
IC5,6 : NJM
IC7 : TC4
IC8,13 : S-8
IC9 : S-8
IC10 : ※
IC11 : LC7
IC12 : HD4

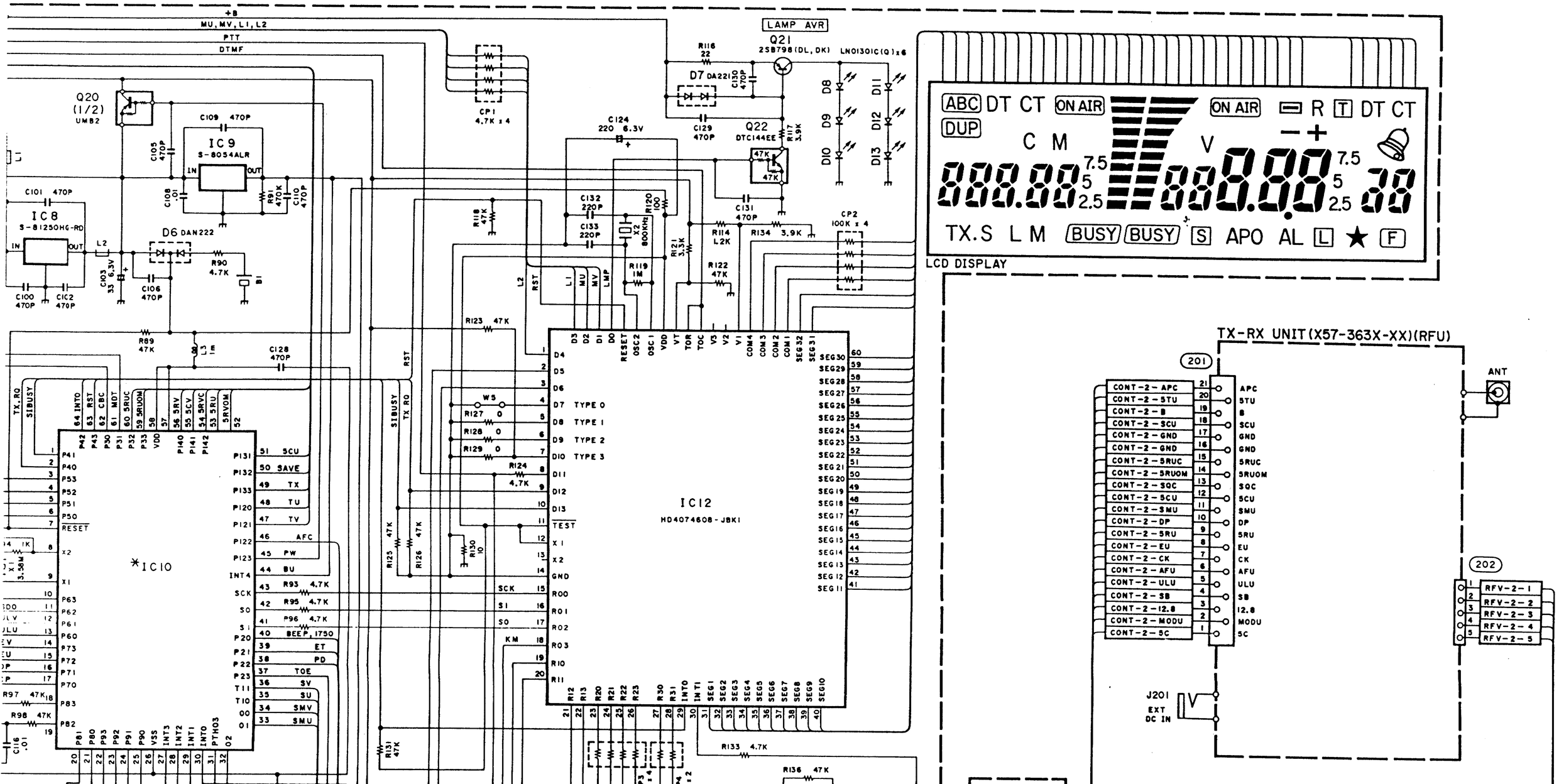
+B
MU, MV, L1, L2
PTT
DTMF
LAMP AVR
Q21
2SB798(DL, DK)
LN01301C(Q)x6
Q20
(1/2)
UMB2
IC9
S-8054ALR
IC8
S-81250HG-RD
D6 DAN222
Q22
DTC144EE
D7 DA2201
CP1
4.7K x 4
CP2
100K x 4
X2
800KHz
IC12
HD4074608-JBK1
TYPE 0
TYPE 1
TYPE 2
TYPE 3
*IC10
LCD DISPLAY
ABC DT CT ON AIR
DUP
C M
V
ON AIR R T DT CT
TX.S L M BUSY BUSY S APO AL L ★ F
TX-RX UNIT(X57-363X-XX)(RFU)
201
202
ANT
J201
EXT
DC IN
CONT-2-APC
CONT-2-5TU
CONT-2-B
CONT-2-SCU
CONT-2-GND
CONT-2-GND
CONT-2-5RUC
CONT-2-5RUOM
CONT-2-SQC
CONT-2-5CU
CONT-2-SMU
CONT-2-DP
CONT-2-5RU
CONT-2-EU
CONT-2-CK
CONT-2-AFU
CONT-2-ULU
CONT-2-SB
CONT-2-12.8
CONT-2-MODU
CONT-2-SC
RFV-2-1
RFV-2-2
RFV-2-3
RFV-2-4
RFV-2-5

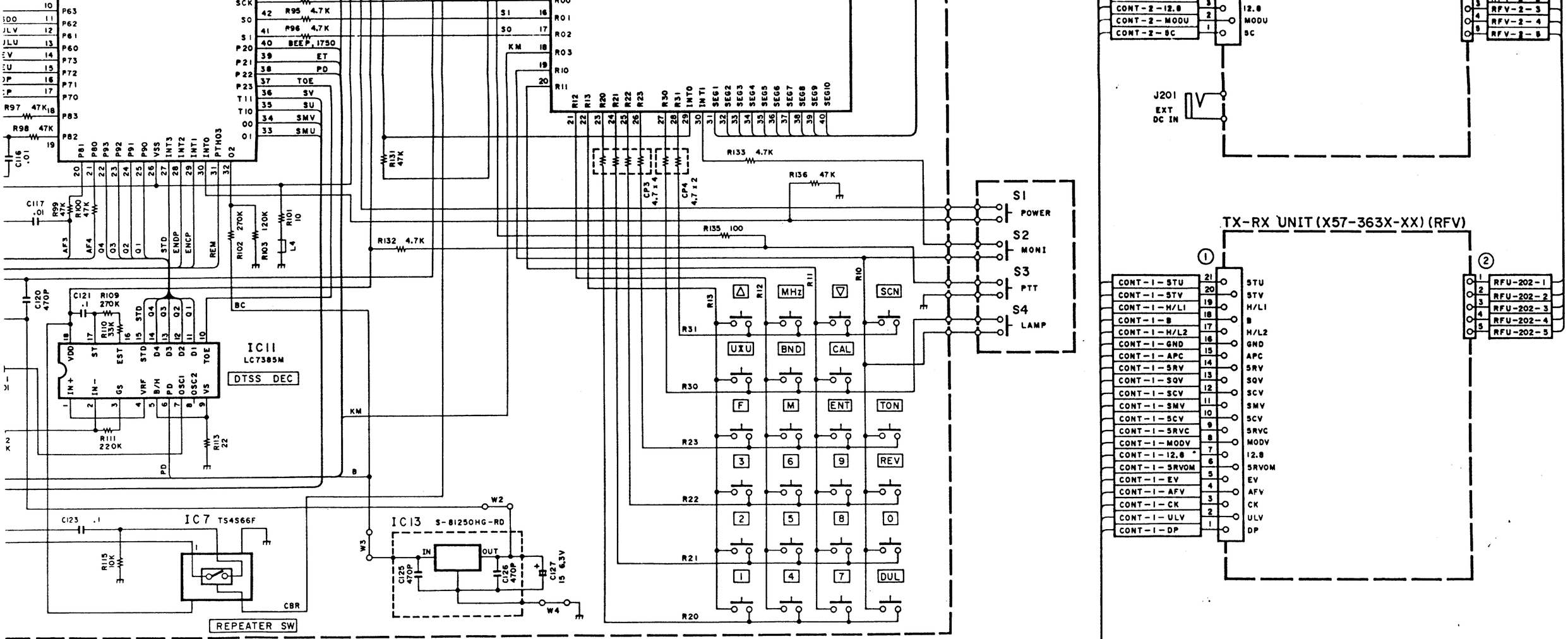

IC1	: NJM4560M	Q1,3,7	: UMA9	Q17	: 2SC4617(R)	D1	: DE5SC4M
IC2~4	: TC4066BF	Q2,4	: FMA7	Q18	: DTA144WE	D2~5	: MA110
IC5,6	: NJM386BM	Q5,8,16	: 2SB1182F5(Q)	Q20	: UMB2	D6	: DAN222
IC7	: TC4S66F	Q6,9	: UMW1	Q21	: 2SB798(DL,DK)	D7	: DA221
IC8,13	: S-81250HG-RD	Q10,24	: DTB113ZK			D8~13	: LN01301C(Q)
IC9	: S-8054ALR	Q11,22	: DTC144EE			D14	: RLZJ5.6B
IC10	: *	Q12	: UMG1				
IC11	: LC7385M	Q13,23	: DTC144EU				
IC12	: HD4074608-JBK1	Q14,15,19	: 2SC4116(Y)				

TH-77(K)(1/2)

Note:
Circuit is subject to change without notice due to advancements in technology.

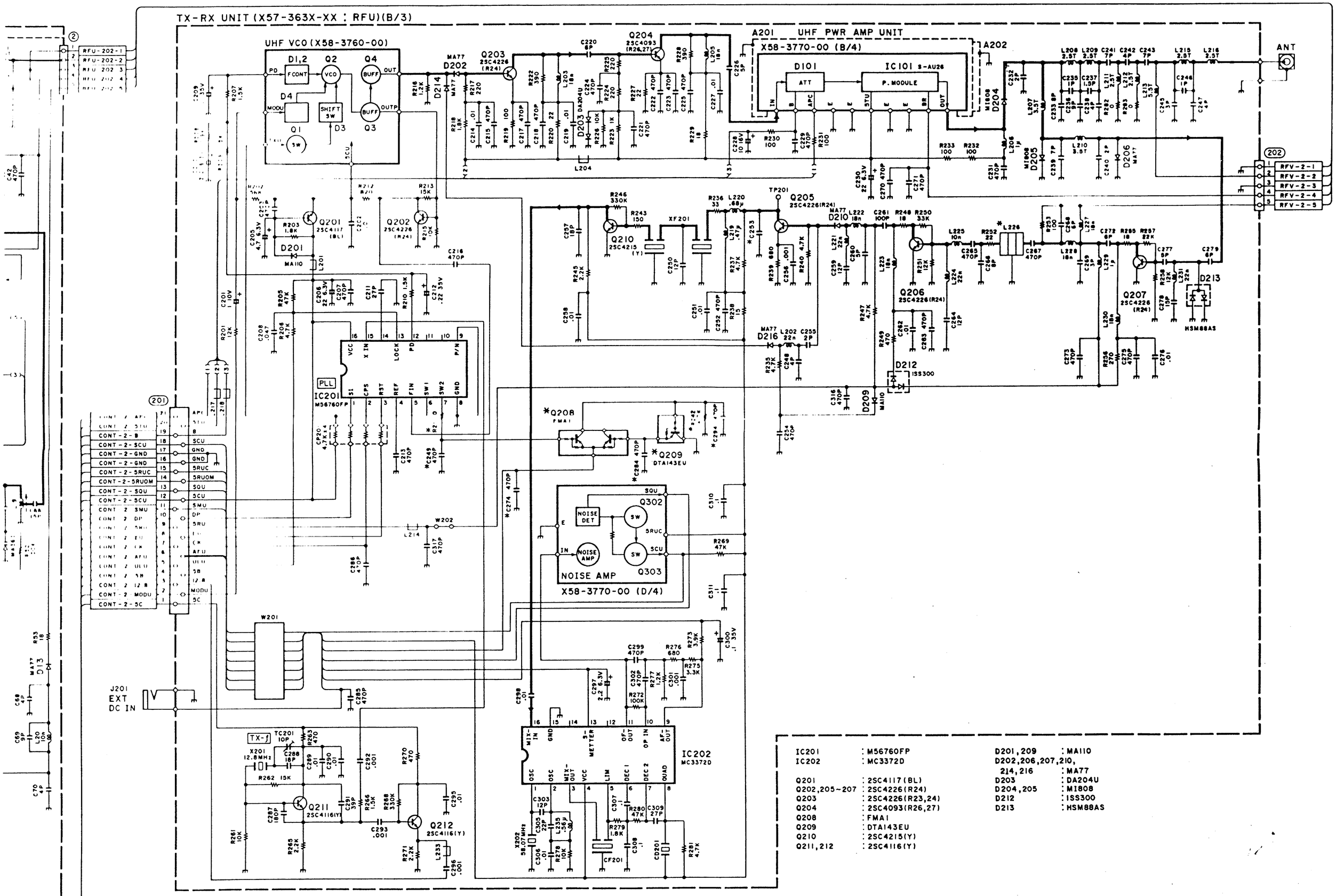

IC201	: M56760FP	D201,209	: MA110
IC202	: MC3372D	D202,206,207,210, 214,216	: MA77
Q201	: 2SC4117(BL)	D203	: DA204U
Q202,205~207	: 2SC4226(R24)	D204,205	: MI808
Q203	: 2SC4226(R23,24)	D212	: ISS300
Q204	: 2SC4093(R26,27)	D213	: HSM88AS
Q208	: FMA1		
Q209	: DTA143EU		
Q210	: 2SC4215(Y)		
Q211,212	: 2SC4116(Y)		

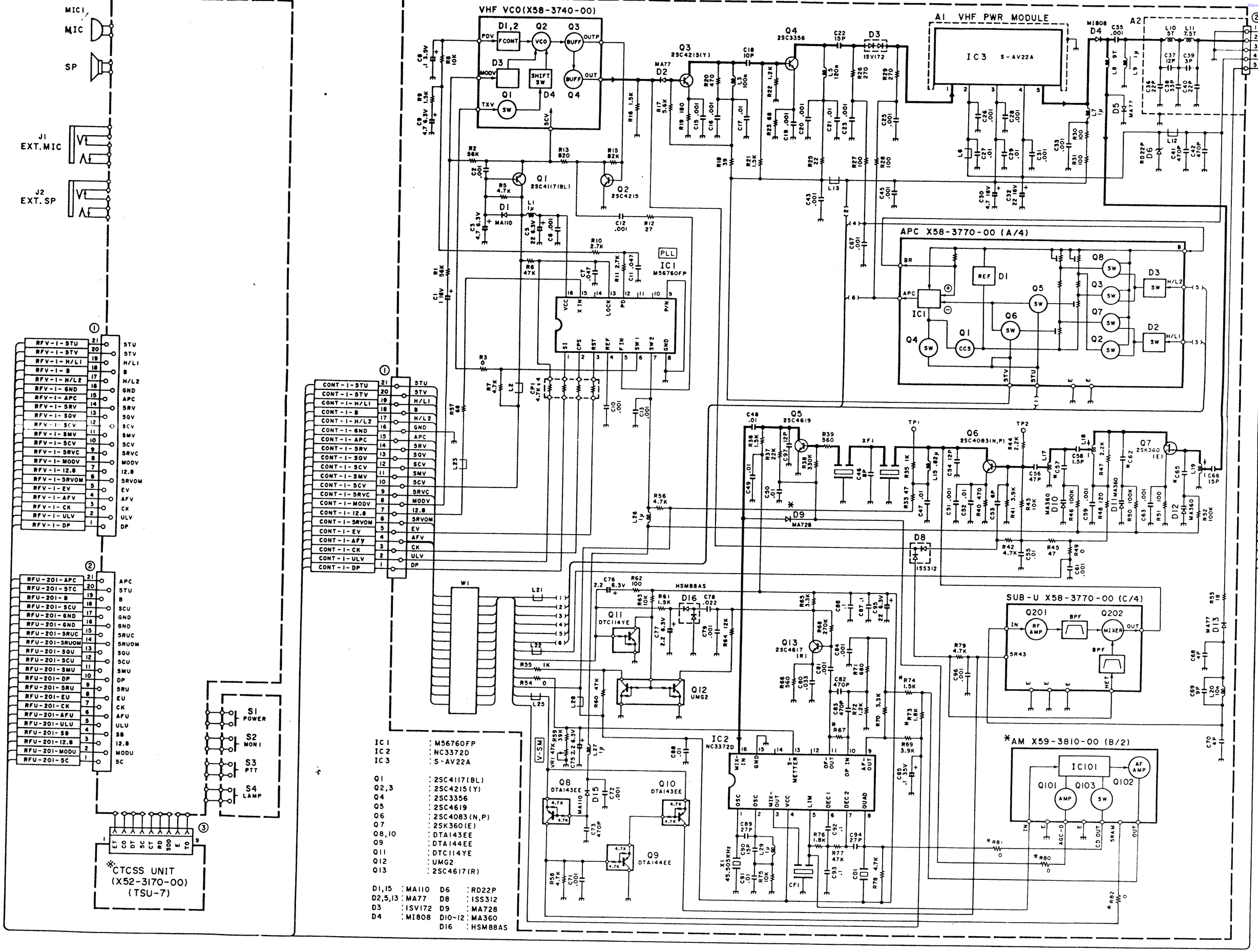
VHF VCO(X58-3740-00)
A1 VHF PWR MODULE
IC3 S-AV22A
APC X58-3770-00 (A/4)
SUB-U X58-3770-00 (C/4)
*AM X59-3810-00 (B/2)
*CTCSS UNIT (X52-3170-00) (TSU-7)
MIC1
MIC
SP
J1 EXT.MIC
J2 EXT.SP
S1 POWER
S2 MON I
S3 PTT
S4 LAMP
IC1 : M56760FP
IC2 : NC3372D
IC3 : S-AV22A
Q1 : 2SC4117(BL)
Q2,3 : 2SC4215(Y)
Q4 : 2SC3356
Q5 : 2SC4619
Q6 : 2SC4083(N,P)
Q7 : 2SK360(E)
Q8,10 : DTA143EE
Q9 : DTA144EE
Q11 : DTC114YE
Q12 : UMG2
Q13 : 2SC4617(R)
D1,15 : MA110
D2,5,13 : MA77
D3 : ISV172
D4 : MI808
D6 : RD22P
D8 : ISS312
D9 : MA728
D10~12 : MA360
D16 : HSM88AS