144MHz FM TRANSCEIVER

TH-K2AT/K2E/K2ET

KENWOOD

ManualsPlus.com

SERVICE MANUAL

© 2003-8 PRINTED IN JAPAN
B51-8658-00 (S) 836

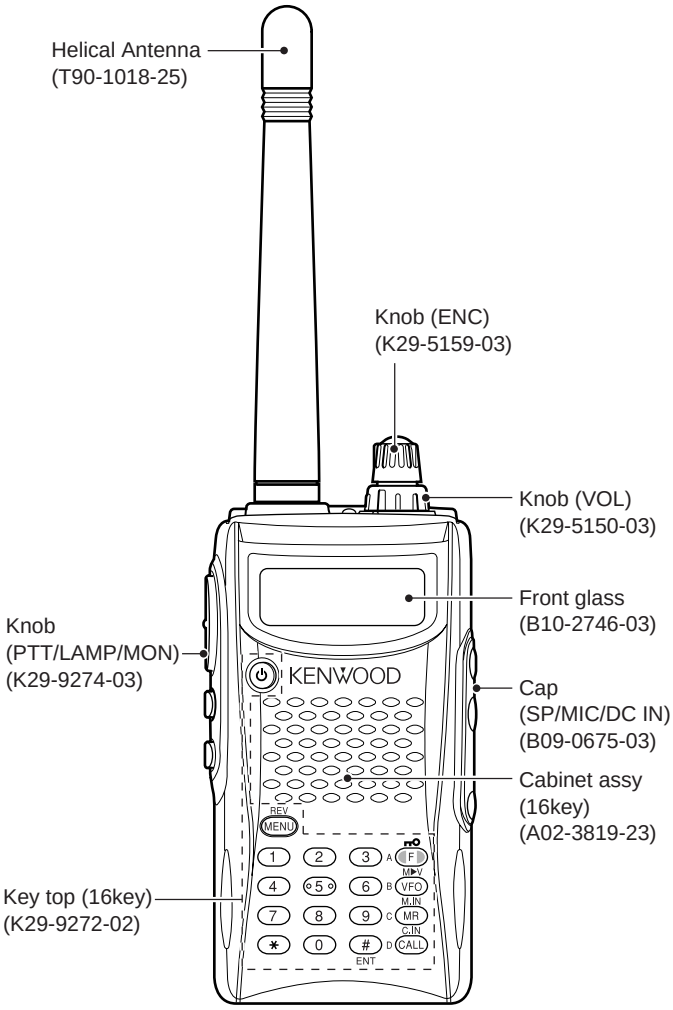

TH-K2AT/K2ET

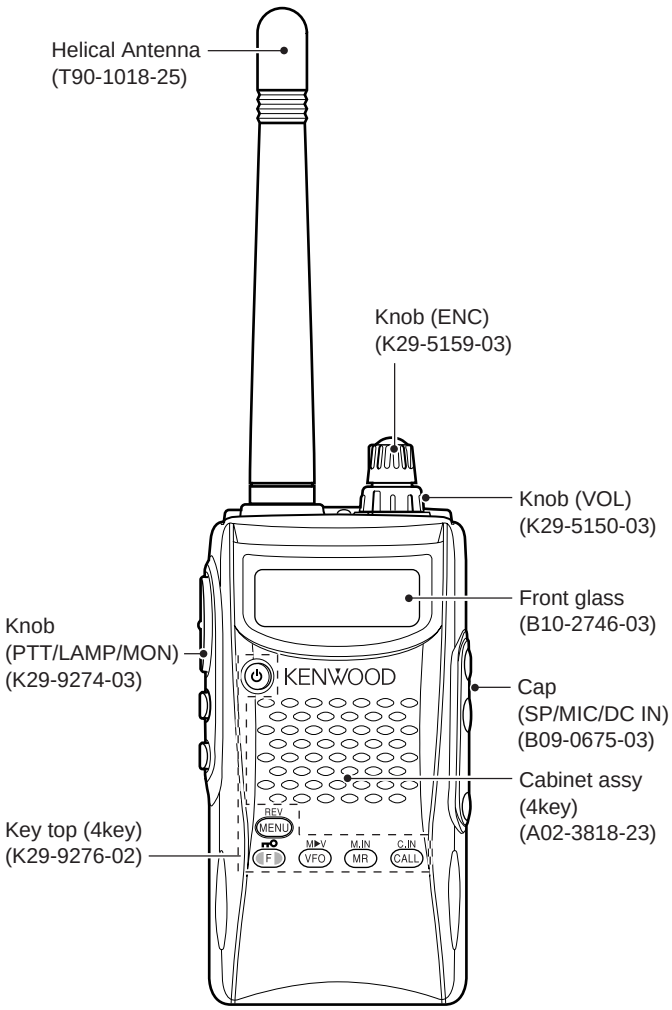

TH-K2E

CONTENTS

DISASSEMBLY FOR REPAIR 2
CIRCUIT DESCRIPTION 6
SEMICONDUCTOR DATA 14
COMPONENTS DESCRIPTION 15
PARTS LIST 17
EXPLODED VIEW 23
PACKING 25
ADJUSTMENT 27
TERMINAL FUNCTION 43
PC BOARD
- **TX-RX UNIT (X57-674X-XX) (A/3)** 44
- **TX-RX UNIT (X57-674X-XX) (B/3),(C/3)** 48

SCHEMATIC DIAGRAM 50
LEVEL DIAGRAM 55
BLOCK DIAGRAM 56
BC-21 (WALL CHARGER) 58
PB-43N (Ni-MH BATTERY PACK) 58
BT-14 (BATTERY CASE) 59
PG-4Y (PROGRAMMING INTERFACE CABLE) 59
MCP-1A (MEMORY CONTROL PROGRAM) 59
SPECIFICATIONS ..... **BACK COVER**

Downloaded by
RadioAmateur.EU

ManualsPlus.com

DISASSEMBLY FOR REPAIR

How to remove the case assembly from the chassis

1. Remove two screws (❶) holding the chassis.
2. Pull out two knobs (❷) and remove two round nuts (❸).
3. Pull out the SP and MIC parts of the cap from jacks (❹).
4. Turn the unit over with the bottom of the chassis facing upwards, and remove the chassis (❻) from the case assembly (❺).
5. Remove the speaker lead (❼) from the connector (CN2) of the TX-RX PC board (TX-RX unit A/3).

How to remove the PC board

■ Numeric key PC board (TX-RX unit B/3)

1. Remove three screws (❽) on the numeric key PC board.
2. Lift the numeric key PC board and remove it from the connector (CN9) of the TX-RX PC board (❾).

■ PTT PC board (TX-RX unit C/3)

3. Remove one screw on the PTT PC board (❿).
4. Pull the PTT PC board to the left and remove it from the connector (CN6) of the TX-RX PC board (TX-RX unit A/3) (⓫).

■ TX-RX PC board (TX-RX unit A/3)

5. Remove the SP/MIC jack cover (⓬).
6. Remove two screws (⓭) holding the shield cover (antenna terminal section).
7. Remove two screws (⓮) holding the shield cover (final amplifier section).
8. Remove eight screws (⓯) on the TX-RX PC board.
9. Absorb solder from the antenna terminal (⓰) with a solder absorber.

Note: Do not melt the shadow plate (⓱) when moving the tip of the solder absorber close to the antenna terminal.

10. Remove the TX-RX PC board from the chassis, then remove the encoder volume FPC (⓲) from the flat cable connector of the TX-RX PC board.

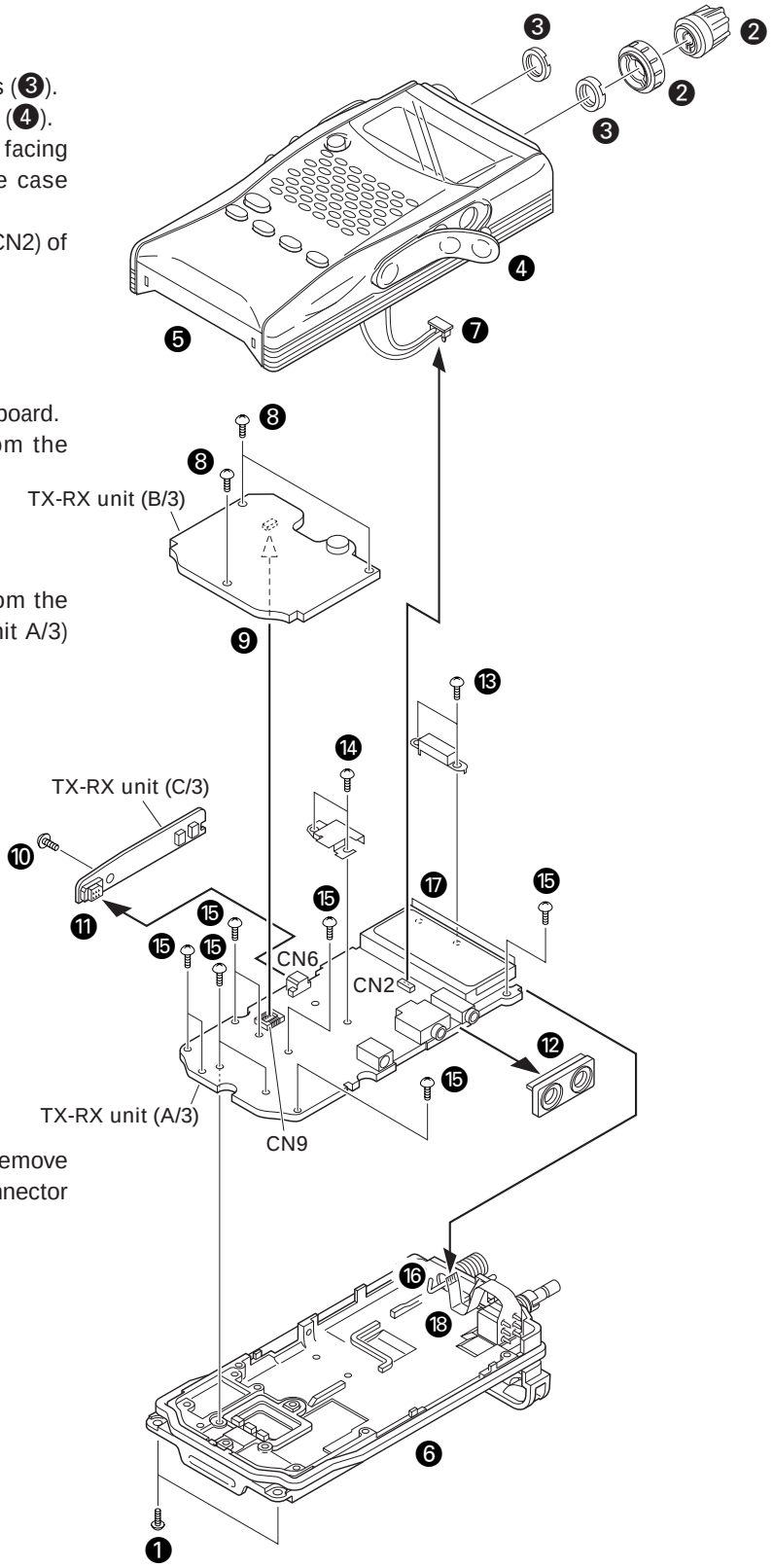

ManualsPlus.com

DISASSEMBLY FOR REPAIR

Soldering the antenna terminal

1. With the shield cover removed from the antenna terminal section, install two screws on the PC board and bring the PC board into contact with the chassis (❶).
2. Solder the antenna terminal with a soldering iron (❷).

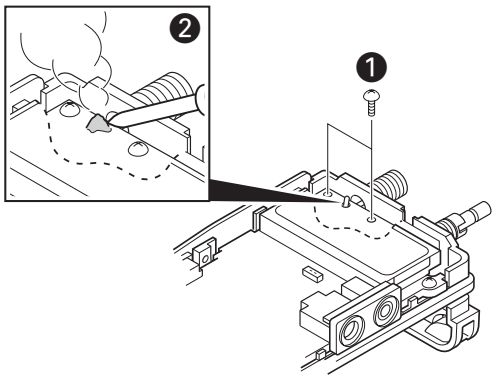

3. Remove the two screws installed in step 1 above, and install the two screws again on the PC board together with the shield cover (❸).

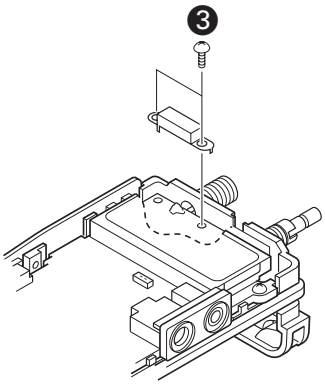

Replacing the final FET (Q12)

1. Remove the two screws holding the shield cover of the final FET section (❶).
2. Remove solder from the shield cover completely with a solder absorber. (E and E3 types only)
3. Remove the shield cover (❷).

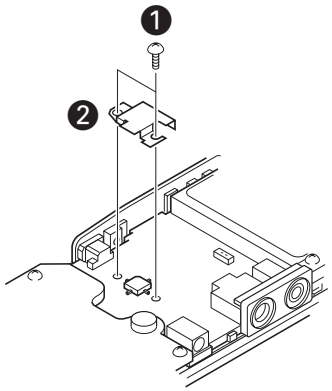

4. Apply the tips of soldering irons to all the four pins of the final FET at the same time (❸), heat them sufficiently, and remove the final FET (❹). (Two persons should be required to do this.)

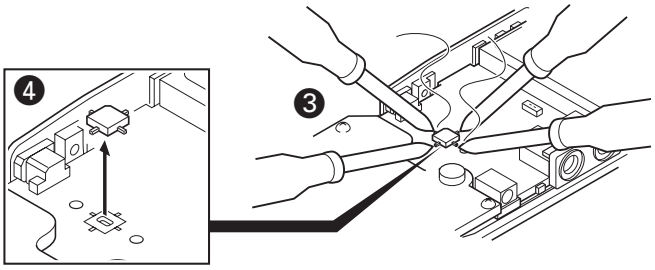

5. Remove all PC boards from the chassis.
6. Confirm that there is no space between the radiation plate installed on the foil side of the TX-RX PC board (TX-RX unit A/3) and the PC board (❺). If there is any space between the radiation plate and PC board, eliminate it by applying the tip of the soldering iron to the radiation plate.

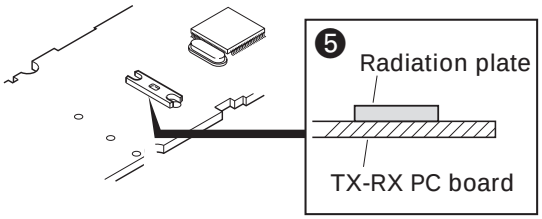

7. Apply the tip of the soldering iron to the installation side of the radiation plate of the TX-RX PC board, put a little amount of solder to the radiation plate that is seen through a square hole in the final FET installation section and melt the solder (❻).
8. When the solder in step 7 is melted, place the final FET on the PC board by aligning it with the silk of the final FET installation section of the PC board (❼).

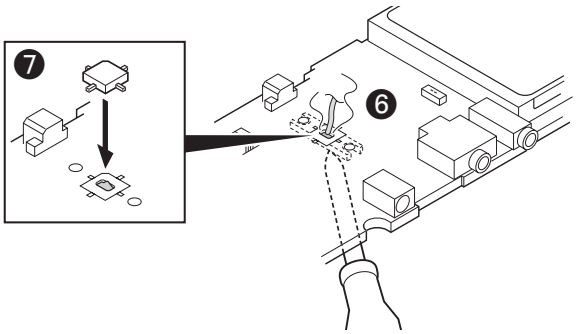

9. Release the soldering iron and confirm that the final FET and radiation plate have been soldered.
10. Solder the four pins of the final FET with the soldering iron.
11. Install all the PC boards.
12. Reinstall the shield cover removed in step 3 above in its original position and install two screws.
13. Solder the shield cover to the PC board. (E and E3 types only)
14. Install the chassis on the case assembly and assemble them.
15. Readjust transmission power.

Note: Since the FET is sensitive to static electricity, always wear a grounding band. Use a highly insulated ceramic heater solder iron.

ManualsPlus.com

DISASSEMBLY FOR REPAIR

Special care and attention required for assembly

1. Gluing to the key top (MIC element section)

You must also glue on the speaker storage area and heap the glue up until wealthy glued on the speaker storage area and the key top for waterproofing the MIC element side of the key top. (Fig. 1)

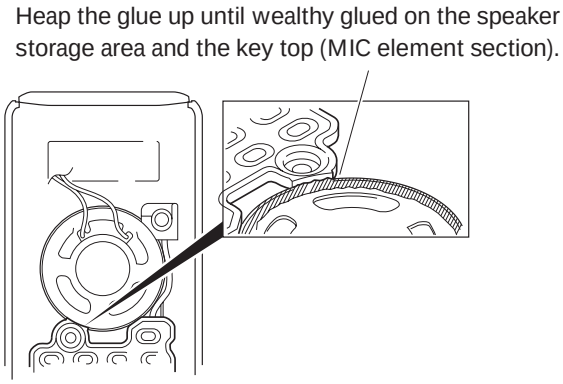

Fig. 1

2. Bending the LCD hardware fixture (J21-8456-03) tabs

(1) Insert the tabs of the LCD hardware fixture into four holes in the LCD installing position of the TX-RX PCB (TX-RX unit A/3). (Fig. 2)

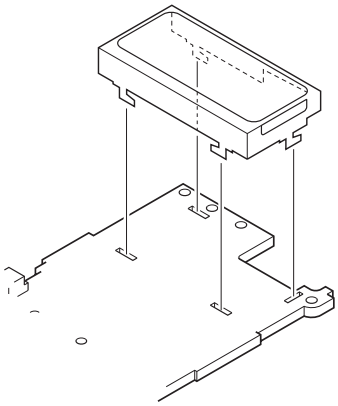

Fig. 2

(2) By pressing the LCD hardware fixture from the component side of the TX-RX PCB, you must bent all 4 tabs of the LCD hardware fixture being visible from the foil side until the bases of each tabs are folded at least 45 degrees (Fig. 3). If the bending angle of the tabs of the LCD hardware fixture is less than 45 degrees, a display error may occur.

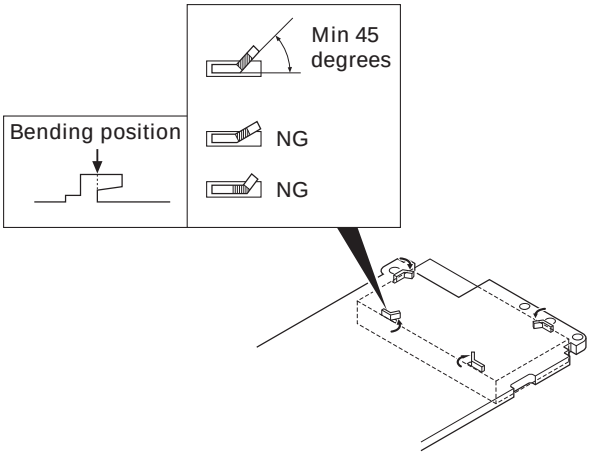

Fig. 3

3. PTT PCB (TX-RX unit C/3) installation procedure

Installing the PTT PCB on the TX-RX PCB and chassis are as follows:

(1) Insert the PTT PCB connector (CN7) into the TX-RX PCB connector (CN6) lightly.

(2) Push three parts of the PTT PCB to contact tightly with the chassis. There may be a small gap between the connectors. (Fig. 4)

Note: A double-side adhesive tape (J99-0376-04) is used behind the PTT switch. When reassembling the PTT PCB to the chassis, press the PTT PCB (under the PTT switch) so that the tape hold the PCB and chassis securely.

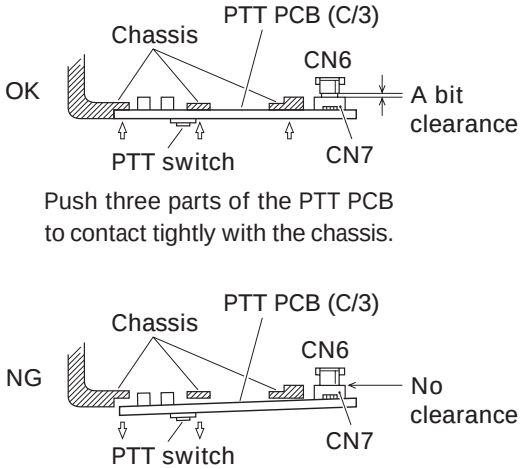

Fig. 4

(3) Tighten one screw in the PTT PCB.

ManualsPlus.com

DISASSEMBLY FOR REPAIR

4. Packing (G53-1572-02) TX/BUSY lamp installation procedure

(1) To assure waterproofing, install the packing in the chassis groove as shown in Fig. 5. (❶)

(2) Install the packing TX/BUSY lamp section on the chassis. (❷)

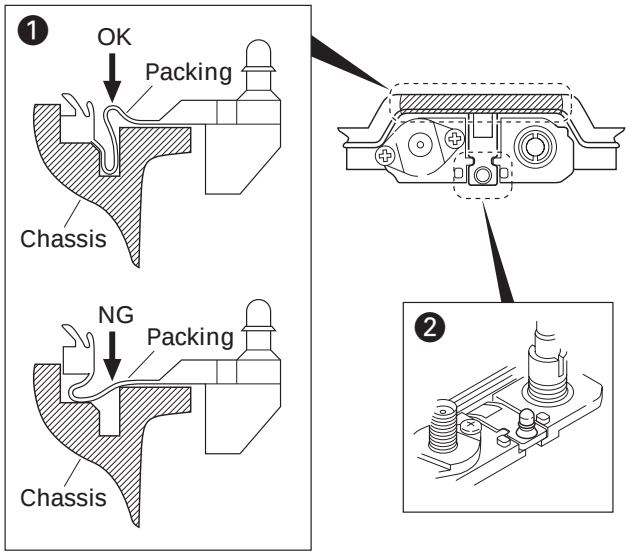

Fig. 5

5. Packing (G53-1572-02) bottom installation procedure

(1) Before installing the numeric key PCB (TX-RX unit B/3) on the chassis, push three parts of the packing to contact tightly with the chassis as shown in Fig. 6. If the packing is not in contact with the chassis, there may be a gap between the transceiver bottom case assembly and the battery, and water may enter through the gap.

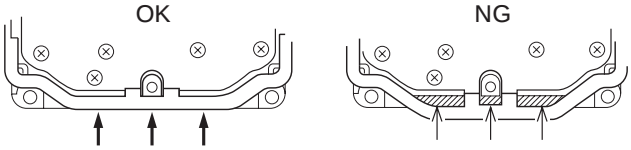

Push three parts of the packing to contact tightly with the chassis.

Clearance NG

Fig. 6

6. Cautions for installing the chassis on the case assembly

(1) Verify that the packing (G53-1572-02) TX/BUSY lamp section is has been past through the hole in the illumination guide section on the top of the case assembly. (Fig. 7)

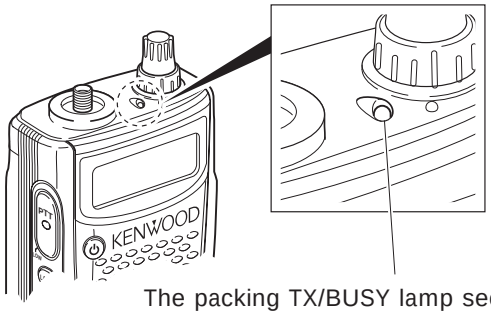

The packing TX/BUSY lamp section is has been past through the hole in the illumination guide section on the top of the case assembly.

Fig. 7

(2) Align the speaker lead as shown fig.8. Do not place the leads over the key top section, LCD section or SP/MIC/DC IN cap section.

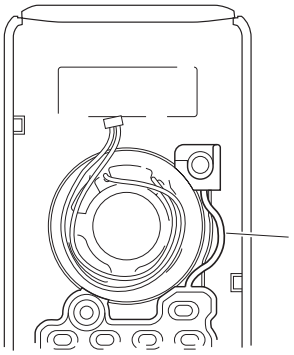

Do not fix this part of the key top to the rib of the case assembly.

Fig. 8

7. Cautions for installing the key top on the case assembly

(1) Install the key top keypad section and the power switch section on the rib of the case assembly.

(2) Do not fix the part between the key top keypad section and the power switch section to the rib of the case assembly, but install it as shown in Fig. 8.

ManualsPlus.com

CIRCUIT DESCRIPTION

Frequency Configuration

The frequency configuration is shown in Figure 1 and Table 1.

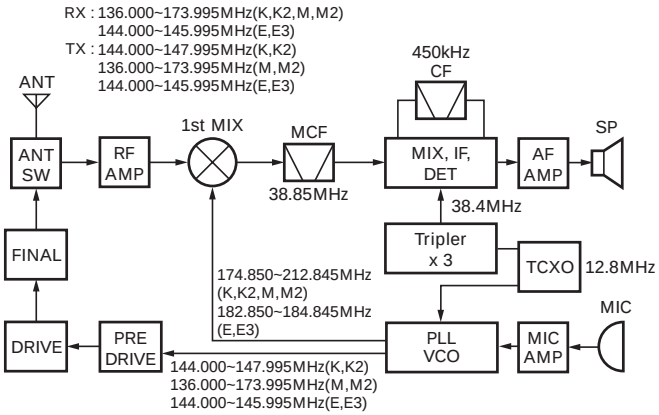

Fig. 1 Frequency configuration

Reception method	Double super heterodyne	
	1st IF Frequency	38.85MHz (Upper)
	2nd IF Frequency	450kHz (Lower)
Transmission method	VCO direct oscillation amplification	
Modulation	Variable reactance phase modulation	

Table 1 Basic configuration

Receiver System

■ Front End

The received signal from the antenna passes through a low-pass filter and then through a transmission/reception switching circuit (antenna switch) and enters the band-pass filter (L40, L41, L38).

The signal passing through the band-pass filter (L40, L41, L38) is amplified by with an RF amplifier (Q17), passes through a band-pass filter (L32, L35) and enters the first mixer (Q16).

These band-pass filters are tuned to a desired frequency by varicaps (D21, D20, D19, D18).

A tuning voltage corresponding to the desired signal is applied to each varicap through the BPF/APC terminal (pin 6) of the MPU (IC8) to tune to the receive frequency.

■ First Mixer

The received signal passing through the band-pass filter (L32, L35) is mixed with the first local signal generated by the VCO by the first mixer (Q16) to produce a first IF signal (38.85 MHz) (Upper heterodyne).

The first IF signal passes through a MCF (Monolithic crystal filter: XF1) to remove unwanted components.

The first IF signal passing through the MCF (XF1) is amplified by an IF amplifier (Q24) and the resulting signal enters the FM IC (IC3).

Item	Rating
Nominal center frequency (fo)	38.85MHz
Pass bandwidth	±6.0kHz or more at 3dB
Attenuation bandwidth	±25kHz or less at 35dB
Ultimate attenuation	70dB or more (fo –910 kHz)
Spurious response	40dB or more (fo +1MHz)
Ripple	1dB or less
Insertion loss	4dB or less
Terminating impedance	610Ω ±5% // 3pF ±0.5pF

Table 2 MCF (L71-0619-05) characteristics (TX-RX unit XF1)

Item	Rating
Nominal center frequency (fo)	450kHz
3dB bandwidth	±6.5kHz or more
50dB bandwidth	±15.5kHz or less
Ripple	2dB or less (fo ±6.5kHz)
Guaranteed attenuation	55dB or more (fo ±18kHz to ±33kHz) 50dB or more (fo ±100kHz)
Insertion loss	4dB or less
I/O matching impedance	1.5kΩ

Table 3 Ceramic filter (L72-0968-05) characteristics (TX-RX unit CF1)

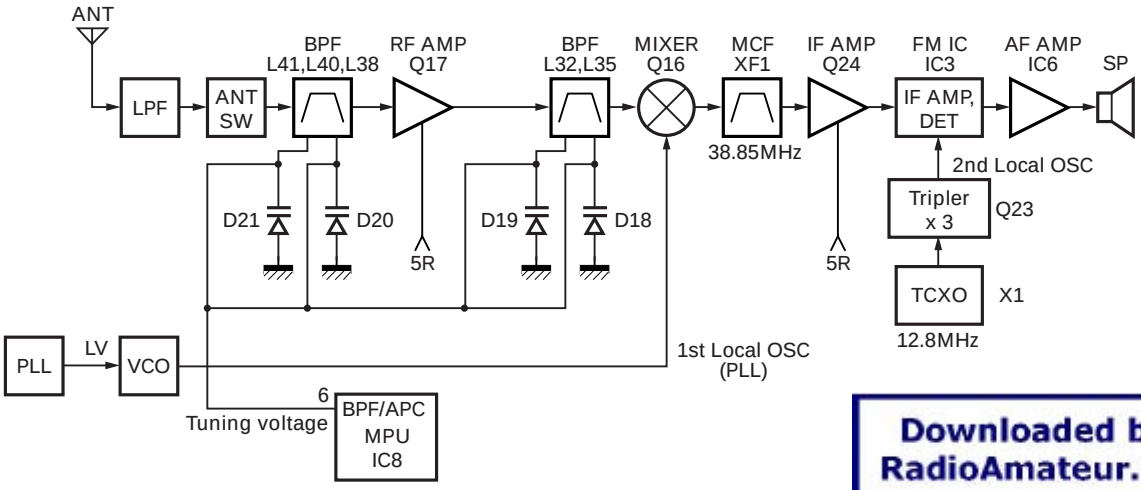

Fig. 2 Receiver section configuration

Downloaded by RadioAmateur.EU

ManualsPlus.com

CIRCUIT DESCRIPTION

■ IF Circuit

The first IF signal (38.85 MHz) amplified by the IF amplifier (Q24) and the second IF signal (38.4 MHz) generated by tripling the 12.8 MHz reference oscillator frequency of the TCXO (X1) by Q23, are mixed in the FM IC to produce a second IF signal (450 kHz) (Lower heterodyne).

The second IF signal passes through a ceramic filter (CF1) to remove unwanted components.

The second IF signal passing through the ceramic filter (CF1) passes through the IF amplifier in the FM IC again and is detected to produced an audio signal.

■ Squelch and Mute Circuit

A noise component is obtained by passing FM detection output (FM IC pin 9) through an operational amplifier in the FM IC and band-pass filter consisting of R125, R126, R135, C173, C174. The noise component is rectified in the FM IC to produce a DC voltage, which is output from the N-REC terminal (pin 14) of the FM IC as squelch voltage.

The squelch voltage enters the SQ terminal (pin 48) of the MPU (IC8) and is compared with the reference voltage preset in the MPU to control audio signal ON/OFF.

When "L" is output from the AFM terminal (pin 9) of the MPU, the AF mute switch (Q20) is activated to mute the audio signal.

■ S Meter Circuit

The S meter voltage is output from the RSSI terminal (pin 12) of the FM IC (IC3) and input to the SM terminal (pin 49) of the MPU. Then the voltage is converted from analog to digital in the MPU to control the S meter display on the LCD.

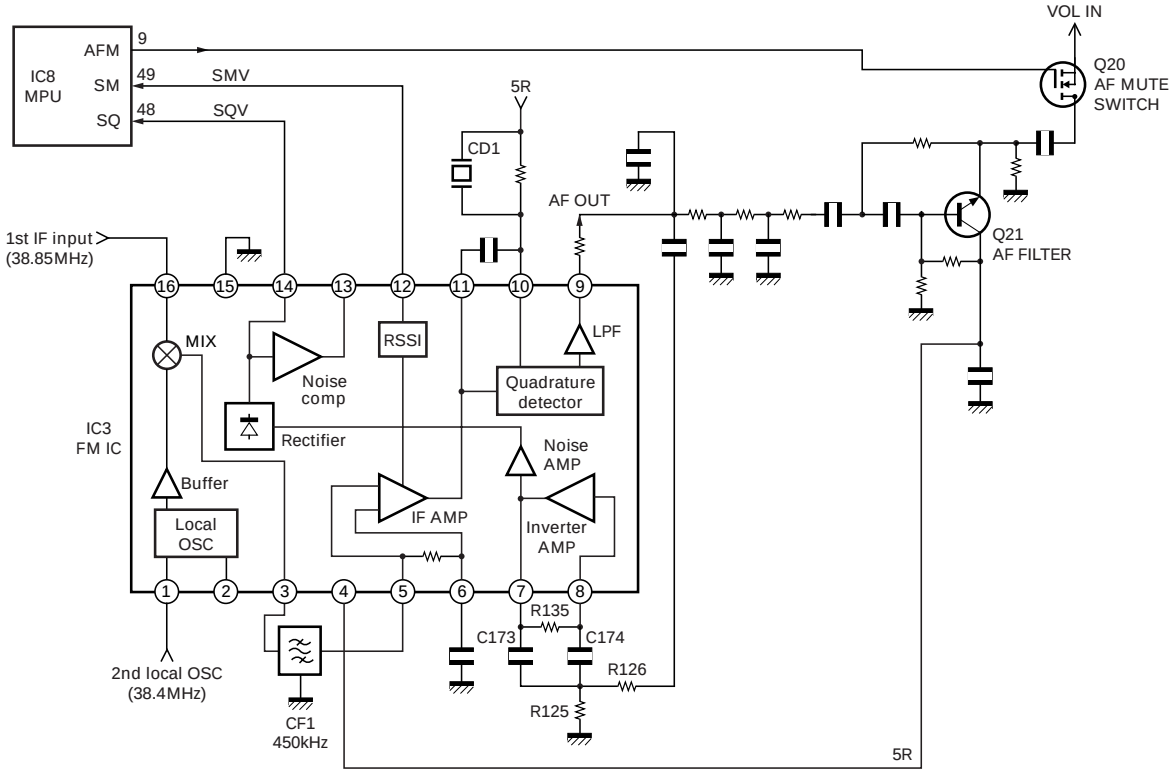

Fig. 3 IF, Squelch, Mute and S meter circuit

■ AF Amplifier

The detected audio signal passes through an AF filter (Q21) and enters an AF mute switch (Q20).

After passing through the AF mute switch (Q20), the signal passes through an AF volume (VR201) and is amplified to a specified output level with an AF amplifier (IC6).

The audio signal amplified with the AF amplifier (IC6) is output through an internal speaker or an external speaker jack (J4).

The beep tone and the DTMF signal are output from the DTMF/BEEP terminal (pin 40) of the MPU (IC8), enters the AF amplifier (IC6) and is output as a monitor tone.

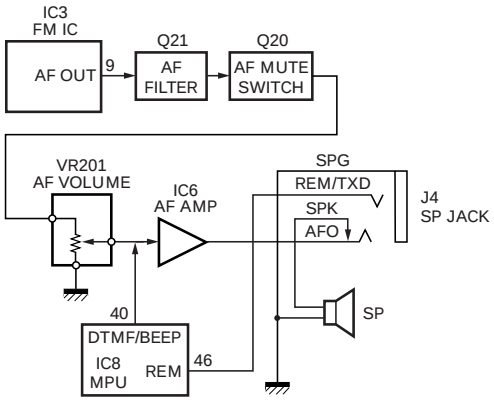

Fig. 4 AF amplifier

ManualsPlus.com

CIRCUIT DESCRIPTION

Transmitter System

■ Microphone Amplifier Circuit

The audio signal from the microphone passes through a high-pass filter (IC5) and enters a microphone amplifier (IC16).

The signal passes through a pre-emphasis circuit, limiter amplifier and splatter filter inside the microphone amplifier. The splatter filter will remove distortion outside the audio band.

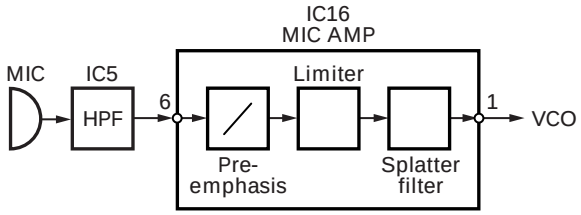

Fig. 5 Microphone amplifier circuit

■ Modulation Circuit

The audio signal amplified by the microphone amplifier (IC16) passes through a semi-fixed volume (VR5) for modulation adjustment, and goes to the VCO modulation varicap (D6) for variable reactance phase modulation.

■ Drive and Final Circuit

The output signal from VCO (Q1) passes through an RF amplifier (Q2, Q5, Q9) and drive amplifier (Q10, Q11), and is amplified by a power amplifier (Q12).

■ Transmission/Reception Switching Circuit

The signal amplified by the power amplifier (Q12) passes through a transmission/reception switching circuit and a low-pass filter, and is fed to the antenna.

The transmission/reception switching circuit consists of D10, L19, D12 and D13. These diodes are turned ON in transmit mode and OFF in receive mode to switch signals.

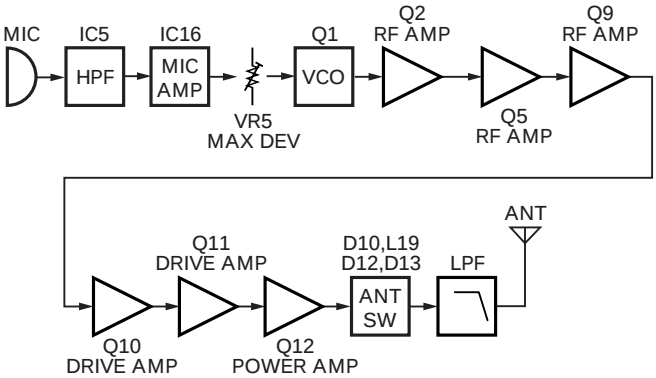

Fig. 6 Modulation, Drive, Final and Transmission/reception switching circuit

■ APC Circuit

The APC (Automatic Power Control) circuit is used to obtain a stable transmission power and controls transmission output by detecting the drain current of Q11 and Q12.

The transmission output can be changed in three levels: High, Mid, and Low.

The reference voltage is output from the BPF/APC terminal (pin 6) of the MPU (IC8) and the detection voltage generated by R70, R71 and R72 are fed to the APC differential amplifier (IC2).

The voltage in proportion to the difference between reference voltage and detection voltage is output from the BOUT terminal (pin 7) of IC2 as an APC voltage.

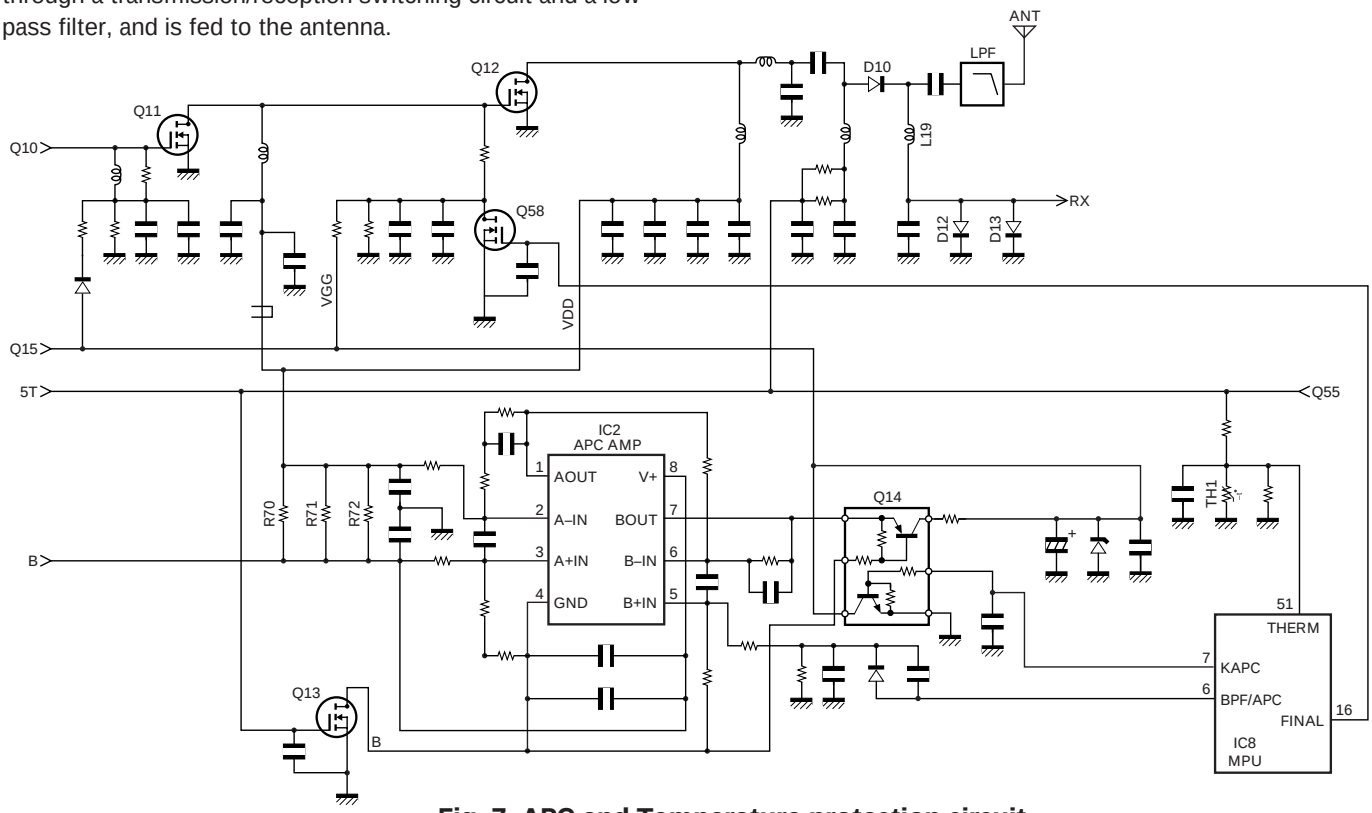

Fig. 7 APC and Temperature protection circuit

ManualsPlus.com

CIRCUIT DESCRIPTION

The APC voltage controls the gate voltage of Q11 and Q12, and keeps transmission output stable.

The MPU detects power supply voltage and controls Q58 by transmission power supply voltage and transmission power. For example, if the power supply voltage during transmission, is equal to or higher than approx. 10.5 V and if power is at Mid or Low level, the APC voltage level applied to Q12 is reduced by Q58.

■ Temperature Protection Circuit

To prevent thermal destruction of the power amplifier (Q12), this circuit reduces APC voltage when Q12 temperature rises.

The MPU (IC8) detects temperature with a thermistor (TH1) and controls reference voltage to the APC circuit.

PLL System

■ PLL Circuit

A reference frequency of 5 kHz or 6.25 kHz is produced by dividing the 12.8 MHz reference frequency of the TCXO (X1) with PLL IC (IC1). Comparison frequency is produced by amplifying VCO output with an RF amplifier (Q6) and dividing it with the PLL IC.

The PLL synthesizer with 5 kHz and 6.25 kHz step is configured by comparing phases of the reference frequency and comparison frequency.

The phase difference between reference frequency and comparison frequency passes through a charge pump in the PLL IC, then ripples are removed with a loop filter with low-range passing characteristics to produce VCO control voltage (lock voltage).

■ VCO Circuit

The VCO produces a desired frequency directly with a Colpits oscillation circuit containing an oscillation transistor (Q1) used for both transmission and reception.

The VCO control voltage is applied to varicap (D1, D2) to produce a desired frequency.

The SHIFT terminal (pin 113) of the MPU (IC8) goes "H" during reception, and the shift control switch (Q3) is turned ON to change oscillation frequency.

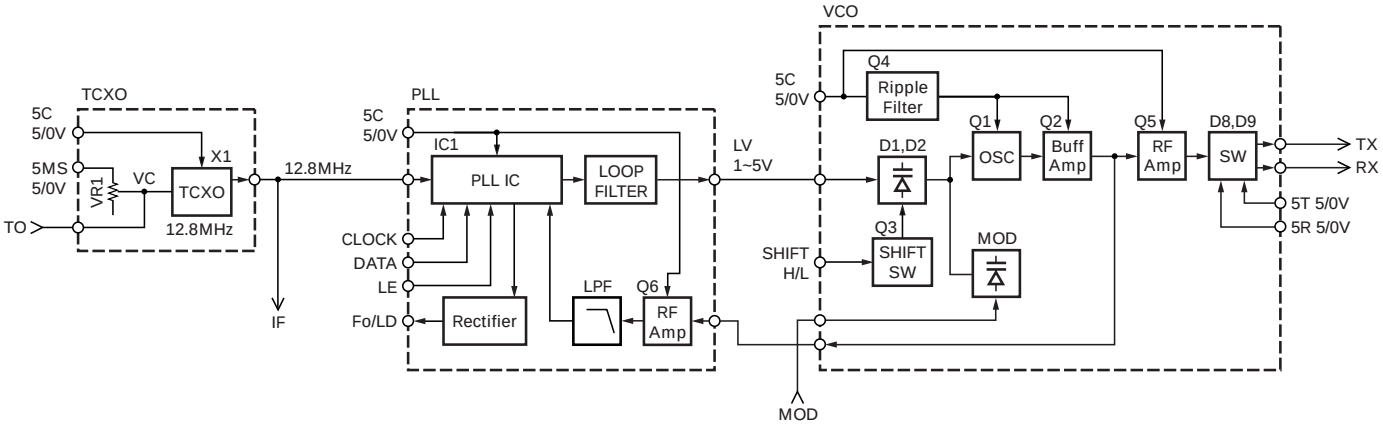

Fig. 8 PLL and VCO circuit

■ Unlock Detection Circuit

When the PLL is unlocked, the waveform of the pulse output from the Fo/LD terminal (pin 14) of the PLL IC (IC1) is rectified with R32, D16, R35 and C40, and the Fo/LD terminal is made "L" level. The voltage at the Fo/LD terminal is detected by the MPU to control transmission/reception switching timing.

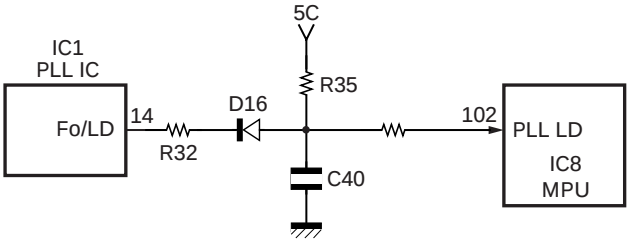

Fig. 9 Unlock detection circuit

ManualsPlus.com

CIRCUIT DESCRIPTION

Power Supply Circuit

■ Charging Circuit

When an external power supply is connected to the DC IN terminal, the constant-current circuit consisting of Q33 and D31 provides a constant current of approx. 110 mA to the Ni-MH battery.

If no external power supply is connected to the DC IN terminal, the constant-current circuit does not function.

■ Power Supply Switching Circuit

The voltage supplied through the battery terminal or DC IN terminal is branched in the power supply switching circuit as shown in Fig.10 and then supplied to the required components.

■ Battery Type Recognition Circuit

When the battery pack is attached to the transceiver, the battery type is recognized with the T terminal on the transceiver. This battery type recognition activates charging for the Ni-MH battery pack and displaying the battery meter.

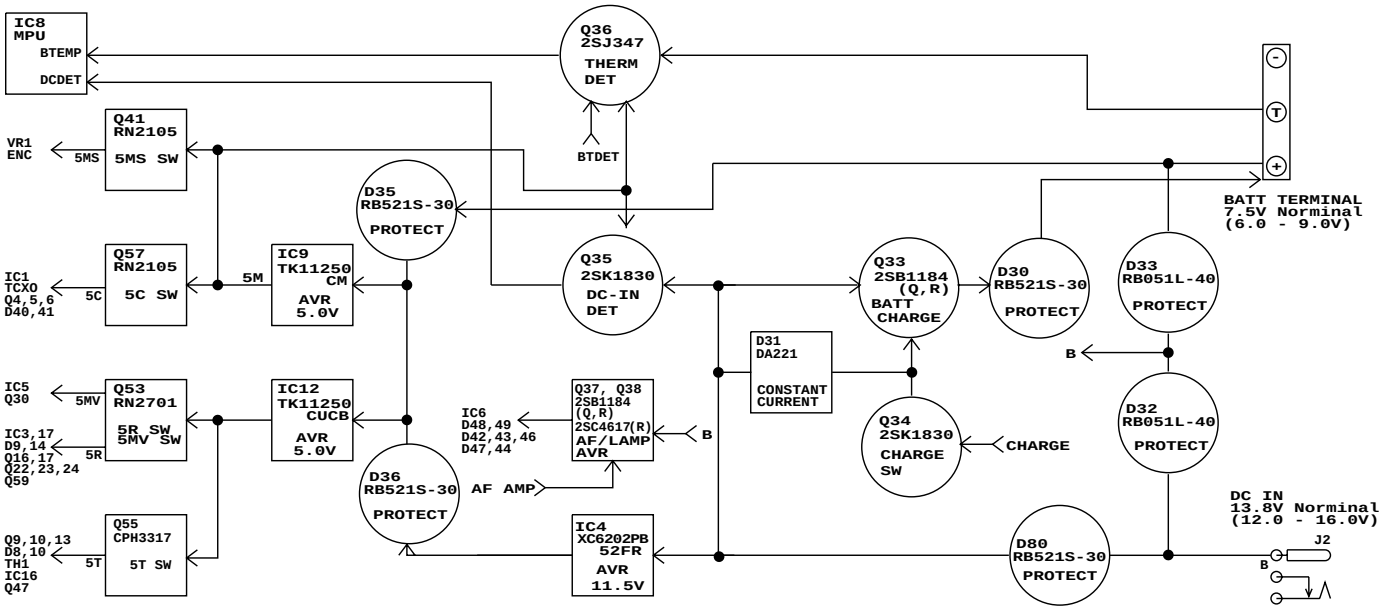

Fig. 10 Charging and Power supply switching circuit

Control System

■ Reset and Backup Circuit

When power is supplied to the transceiver, the 5M voltage goes "H" as C303 is charged.

A rising edge of the 5M voltage is detected by the voltage detection IC (IC11) and when its output (RESET) goes "H", the reset status of the MPU is released.

If the supplied voltage to the transceiver is reduced and the 5M voltage falls below the detection voltage of the voltage detection IC (IC10), the MPU detects it by an interrupt processing, backs up data in EEPROM (IC15) and turns the power off.

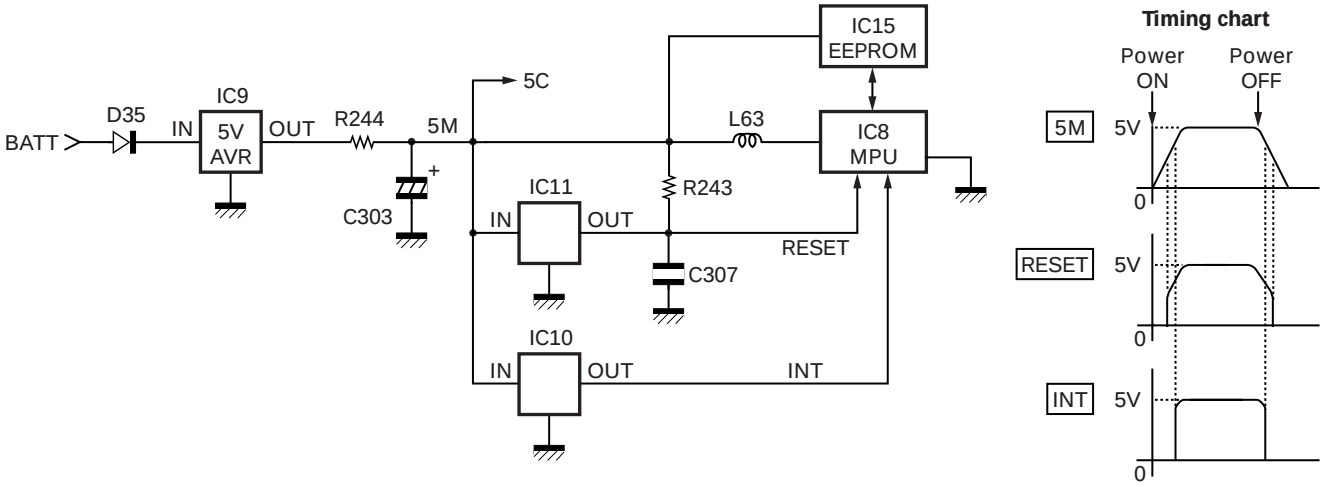

Fig. 11 Reset and Backup circuit

ManualsPlus.com

CIRCUIT DESCRIPTION

■ Voltage Detection Circuit

Various voltages are input to the A/D port of the MPU (IC8) for processing.

Battery voltage is divided with resistors (R240, R241) and enters the BATT terminal (pin 52) of the MPU.

Battery voltage is used for battery meter indication during transmission or for alert tone processing when an abnormal power supply voltage (approx. 16.5 V or higher) is applied.

Squelch voltage becomes DC voltage by detecting changes in noise voltage in the FM IC (IC3), and the signal is used for squelch control.

The S meter voltage is output from the RSSI pin of the FM IC to control S meter display.

Detection of thermistor voltage (temperature) in the Ni-MH battery during charging, detection of remote microphone key pressing and VOX voltage monitoring are performed through each A/D port of the MPU.

■ Battery Save Circuit

If there is no signal (squelch off, scan off or no key operation) for longer than 10 seconds, the transceiver will enter the battery save mode.

Battery save operation is performed by controlling Q57 with an output signal from the 5C (SAVE) terminal (pin 15) of the MPU.

The 5C ON/OFF cycle ratio during battery saving can be set from a transceiver menu.

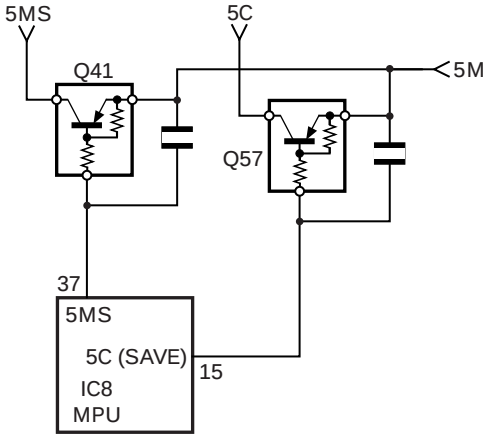

Fig. 12 Battery save circuit

■ LED Drive Circuit

The LCD and key illumination LEDs are lighted by controlling Q51 for the LCD and Q50 for keys according to the output voltage from the AF/LAMP AVR (Q37).

The BUSY and TX illumination LEDs are lighted by controlling Q47.

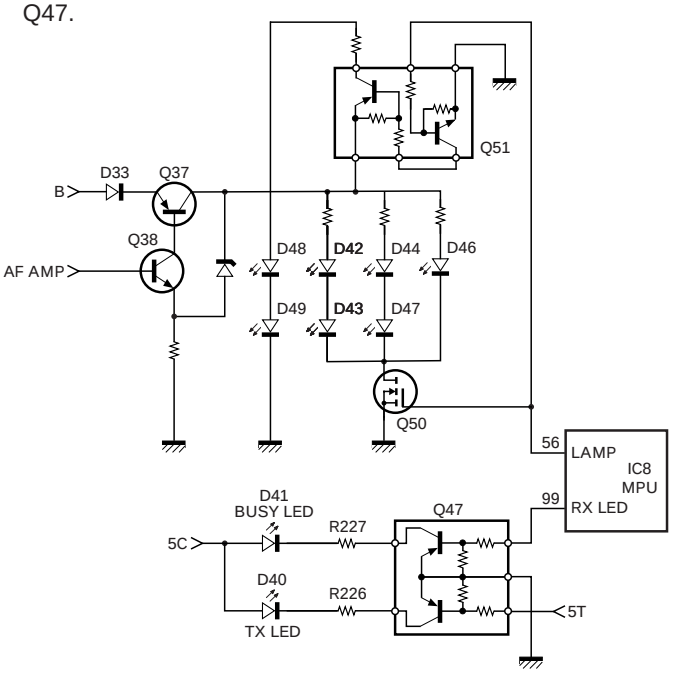

Fig. 13 LED drive circuit

ManualsPlus.com

CIRCUIT DESCRIPTION

■ Key and Encoder Input Circuit

The POWER key is assigned to the interrupt port (pin 95) of the MPU.

The PTT key is assigned to the dedicated port (pins 13, 14) of the MPU.

Other keys composes a matrix and key presses are detected by scanning them by software.

The encoder reads data using the interrupt port (pins 35 and 36) of the MPU.

16 key (K, K2, M, M2 and E3 types)

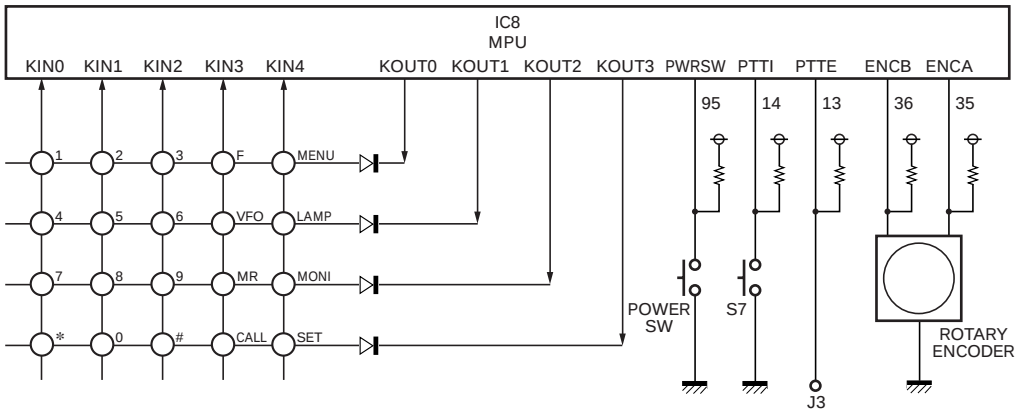

4 key (E type)

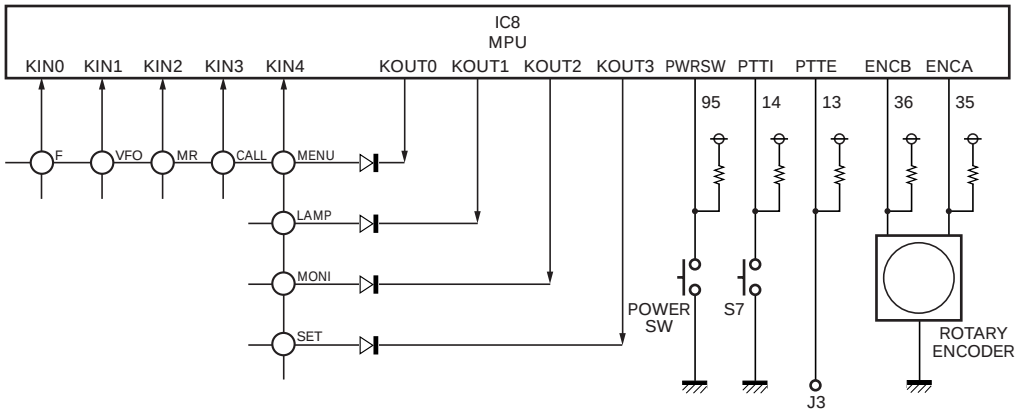

Fig. 14 Key and Encoder input circuit

ManualsPlus.com

CIRCUIT DESCRIPTION

■ CTCSS/DCS

The encode signal is generated by the MPU (IC8) and output from the TONE terminal (pin 41) of the MPU.

The unwanted high-frequency components of the encode signal output from the MPU are removed with a low-pass filter, and applied to VCO modulation input (MOD) and TCXO VC terminal for modulation.

The VCO and TCXO modulation levels are adjusted by VR6 to produce flat modulation characteristics in low and high ranges.

The decode signal is input to the SIGIN pin (pin 47) of the MPU after the waveform of the audio signal from the FM IC is rectified with a CTCSS/DCS filter (IC17). Then the set CTCSS tone frequency and DCS code are detected by digital signal processing in the MPU to control muting.

■ DTMF

The DTMF signal is generated by the MPU (IC8) and is output from the DTMF/BEEP terminal (pin 40) of the MPU.

The DTMF signal is mixed with an audio signal at the input side of the AF amplifier (IC6), and is output as a monitor tone.

The DTMF signal is mixed with a modulation signal at the input side of pre-emphasis in the microphone amplifier (IC16) and used as a transmit signal.

■ VOX

The IC5 and Q30 amplify the audio signal captured in the microphone, and then the signal is converted into the DC Voltage D24 rectifies.

The DC voltage activates the MPU (IC8), and the VOX starts.

■ Weather Alert (K and K2 types only)

The IC17 apmlifies the detected signal from the FM IC (IC3), and the MPU (IC8) processes the signal. This signal processing activates Weather Alert function.

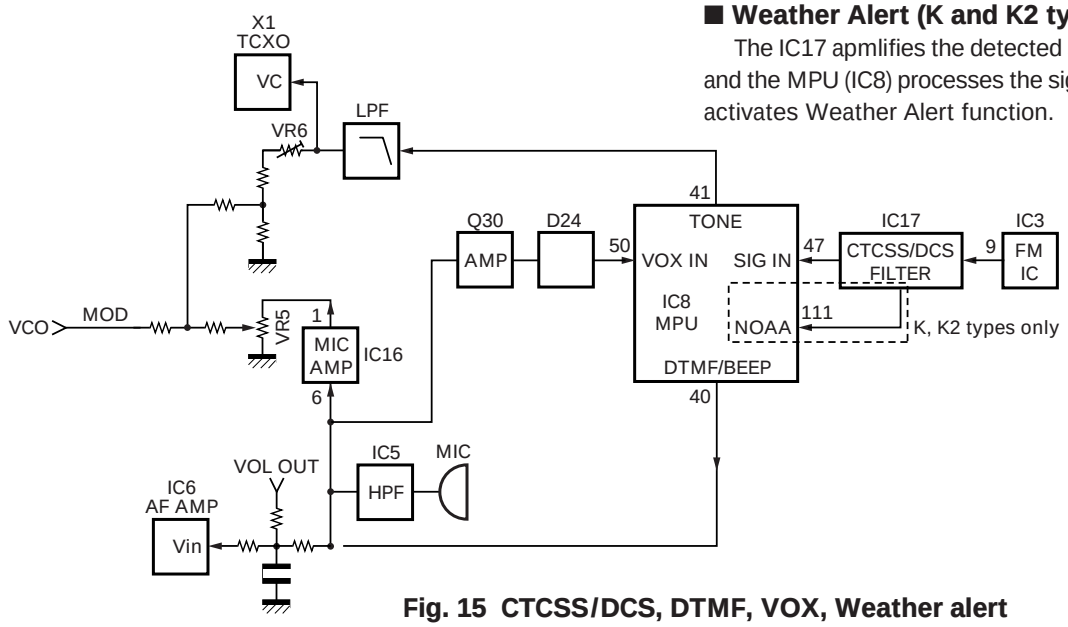

Fig. 15 CTCSS/DCS, DTMF, VOX, Weather alert

■ Serial Control

Serial control must be enabled from a transceiver menu so that the REM/TXD pin of the speaker jack (J4) and the PTT (RXD) pin of the microphone jack (J3) function as TXD and RXD, respectively, when communicating with a personal computer.

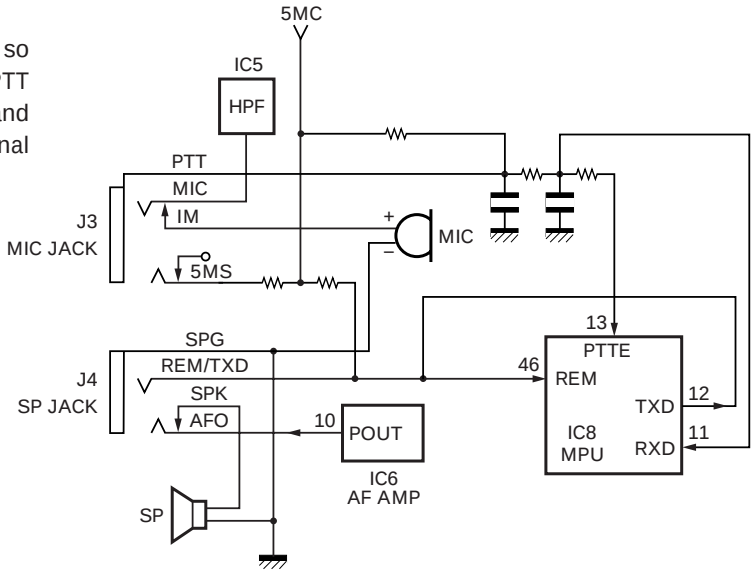

Fig. 16 Serial control

ManualsPlus.com

SEMICONDUCTOR DATA

MPU : 90522BPFFG139 (IC8)

■ Pin function

Pin No.	Pin Name	I/O	Function
1	CLOCK	O	Common serial clock output
2	DATA	O	Common serial data output
3	EEPDI	I	Data input from EEPROM
4	EEPCS	O	Chip select output to EEPROM
5	VOX	O	VOX power supply switch L:ON
6	BPF/APC	O	BPF tuning voltage output, APC voltage output (PWM)
7	KAPC	O	APC ON/OFF switch L:APC ON
8	VCC	-	Positive power supply
9	AFM	O	AF mute switch L:Mute
10	SPM	O	Speaker mute switch H:Mute
11	RXD	I	UART data input line from PC (9600bps)
12	TXD	O	UART data output line to PC (9600bps)
13	PTTE	I	External [PTT] key input L:ON
14	PTTI	I	[PTT] key input L:ON
15	5C(SAVE)	O	Save power supply switch L:ON
16	FINAL	O	Gate bias control of TX final amplifier L:Bias ON
17	SEG0	O	LCD segment output 0
18	SEG1	O	LCD segment output 1
19	SEG2	O	LCD segment output 2
20	SEG3	O	LCD segment output 3
21	SEG4	O	LCD segment output 4
22	SEG5	O	LCD segment output 5
23	SEG6	O	LCD segment output 6
24	SEG7	O	LCD segment output 7
25	SEG8	O	LCD segment output 8
26	SEG9	O	LCD segment output 9
27	SEG10	O	LCD segment output 10
28	SEG11	O	LCD segment output 11
29	SEG12	O	LCD segment output 12
30	SEG13	O	LCD segment output 13
31	SEG14	O	LCD segment output 14
32	SEG15	O	LCD segment output 15
33	VSS	-	GND
34	COR1	-	Power supply stabilization (Connected to VSS through 0.1uF)
35	ENCA	I	Encoder A side input
36	ENCB	I	Encoder B side input
37	5MS	O	5MS main power supply switch L:ON
38	DVCC	-	Reference voltage input for DAC
39	DVSS	-	Ground for DAC
40	DTMF/ BEEP	O	Encode waveform output of DTME/BEEP/ 1750Hz (D/A)
41	TONE	O	Encode waveform output of CTCSS/DCS (D/A)
42	AVCC	-	Positive power supply for ADC
43	AVRH	-	Reference voltage input for ADC
44	AVRL	-	Ground reference voltage input for ADC
45	AVSS	-	Ground for ADC
46	REM	I	Remote control microphone key voltage input (A/D)
47	SIGIN	I	Decode waveform input of CTCSS/DCS (A/D)

Pin No.	Pin Name	I/O	Function
48	SQ	I	Noise voltage input for squelch (A/D)
49	SM	I	RSSI voltage input for S-meter (A/D)
50	VOXIN	I	Microphone voltage input for VOX (A/D)
51	THERM	I	TX temperature compensation input(A/D)
52	BATT	I	Battery voltage input (A/D)
53	BTEMP	I	Detection of thermistor voltage (temperature) in the Ni-MH battety (A/D)
54	VCC	-	Positive power supply
55	CHARGE	O	Battery charge circuit power supply switch H:ON
56	LAMP	O	Lamp power supply switch H:ON
57	AFAMP	O	AF amplifier/Lamp AVR power supply switch H:ON
58	NAR	O	Wide/Narrow switching H:Narrow
59	COM0	O	LCD common output 0
60	COM1	O	LCD common output 1
61	COM2	O	LCD common output 2
62	COM3	O	LCD common output 3
63	VSS	-	GND
64	SEG16	O	LCD segment output 16
65	SEG17	O	LCD segment output 17
66	SEG18	O	LCD segment output 18
67	SEG19	O	LCD segment output 19
68	SEG20	O	LCD segment output 20
69	SEG21	O	LCD segment output 21
70	SEG22	O	LCD segment output 22
71	SEG23	O	LCD segment output 23
72	SEG24	O	LCD segment output 24
73	NC	-	Not used
74	NC	-	Not used
75	SEG25	O	LCD segment output 25
76	SEG26	O	LCD segment output 26
77	SEG27	O	LCD segment output 27
78	SEG28	O	LCD segment output 28
79	SEG29	O	LCD segment output 29
80	SEG30	O	LCD segment output 30
81	SEG31	O	LCD segment output 31
82	V0	-	Not used
83	V1	-	Not used
84	V2	-	Not used
85	V3	-	LCD drive power supply 3
86	HST(VCC)	I	Not used (VCC)
87	MD2	I	L fixed
88	MD1	I	H fixed
89	MD0	I	H fixed
90	RESET	I	Reset input L:Reset
91	VSS	-	GND
92	X0	I	System clock (7.9872MHz)
93	X1	O	System clock (7.9872MHz)
94	VCC	-	Positive power supply
95	PWRSW	I	Power switch interrupt input (↓)
96	INTUP	I	Power supply voltage interrupt input (↑)
97	INTDW	I	Power supply voltage interrupt input (↓)

ManualsPlus.com

SEMICONDUCTOR DATA / COMPONENTS DESCRIPTION

Pin No.	Pin Name	I/O	Function
98	DCDET	I	DC IN detection interrupt input (↓) L:DC IN connected
99	RXLED	O	Busy LED output H:ON
100	BSFT	O	Beat shift swiching output H:ON
101	PLLEN	O	Serial enable output to PLL IC
102	PLLLD	I	Lock detection input from PLL IC H: Lock
103	KIN0	I	Key matrix input 0
104	KIN1	I	Key matrix input 1
105	KIN2	I	Key matrix input 2
106	KIN3	I	Key matrix input 3
107	KIN4	I	Key matrix input 4
108	TYPE	I	Market code bit input
109	VUKEY	I	Detection of 4 key or 16 key
110	MICM	O	Microphone mute switch H:Mute
111	NOAA	I	1050Hz tone detection input
112	5R	O	RX power supply switch L:ON
113	SHIFT	O	VCO shift switch L:TX, H:RX
114	5T	O	TX power supply switch L:ON
115	KOUT0	O	Key matrix output 0
116	KOUT1	O	Key matrix output 1
117	KOUT2	O	Key matrix output 2
118	KOUT3	O	Key matrix output 3
119	VSS	-	GND
120	BTDET	O	Battery detection switch L:ON

COMPONENTS DESCRIPTION

TX-RX UNIT (X57-674X-XX)

Ref. No.	Use/Function	Operation/Condition/Compatibility
IC1	PLL IC	
IC2	APC differential amplifier	
IC3	FM IC	
IC4	11.5V AVR	
IC5	HPF	Active filter
IC6	AF amplifier	
IC8	MPU	
IC9	5.0V AVR	
IC10	4.4V voltage detection	MPU INT voltage detection
IC11	3.3V voltage detection	MPU Reset voltage detection
IC12	5.0V AVR	
IC15	EEPROM	
IC16	MIC amplifier	Limiter, splatter filter
IC17	CTCSS/DCS/WX filter	Active filter
Q1	VCO	
Q2	RF amplifier	
Q3	VCO shift control switch	On RX
Q4	Ripple filter	
Q5,6,9	RF amplifier	
Q10,11	Drive amplifier	
Q12	Power amplifier	
Q13	APC circuit operation switch	On TX
Q14	APC output switch	On TX
Q15	Q10 operation switch	On TX
Q16	1st mixer	
Q17	RX 1st amplifier	
Q20	Audio mute switch	Audio mute when off
Q21	Audio filter	Active filter
Q22	Wide/narrow changeover switch	On when wide is selected
Q23	Tripler	2nd local
Q24	IF amplifier	1st IF 38.85MHz
Q27	Wide/narrow changeover switch	On when wide is selected
Q29	MIC mute switch	Mutes when ON
Q30	VOX detection amplifier	
Q31	Q56 operation switch	Off when the speaker outputs audio
Q33	Charge switch	

ManualsPlus.com

COMPONENTS DESCRIPTION

Ref. No.	Use/Function	Operation/Condition/Compatibility
Q34	Q33 operation switch	On when charging
Q35	DC IN detection	H: DC IN detection
Q36	Ni-MH temperature detection	On when temperature detection is activated
Q37	AF amplifier/ Lamp AVR	
Q38	Q37 operation switch	On when the speaker outputs audio or lamp lights
Q41	5MS switch	On when 5MS is applied
Q47	TX/BUSY LED switch	
Q50	Key LED switch	On when the key LED lights
Q51	LCD LED switch	On when the LCD LED lights
Q52	Beat shift switch	
Q53	5R/5MV switch	On when 5R or 5MV is applied
Q55	5T switch	On when 5T is applied
Q56	Speaker mute switch	
Q57	5C switch	On when 5C is applied
Q58	Q12 gate voltage switch	Off when High power is selected
Q59	WX detection amplifier	
D1,2	VCO frequency control	
D5	Frequency shift	
D6	VCO modulation	
D7	Speed up	Ripple filter
D8	RF switch	On TX
D9	RF switch	On RX
D10-13	Antenna switch	On TX
D14	Reverse current prevention	APC reference voltage
D15	APC output voltage limiter	
D16	PLL lock detection	
D17	Over input protection	
D18-21	RX BPF tuning	
D22	MIC mute control	
D24	VOX detection rectification	
D25	Speaker mute speed up	
D26	C246 discharge	
D27	MIC ALC rectification	
D30	Reverse current prevention	Charge current
D31	Constant-current circuit	Constant-current charge
D32	Reverse current prevention	DC IN

Ref. No.	Use/Function	Operation/Condition/Compatibility
D33	Reverse current prevention	Battery
D34	AVR constant-voltage	
D35	Reverse current prevention	Battery
D36	Reverse current prevention	DC IN
D40	TX LED	Lights on TX
D41	BUSY LED	Lights on RX
D42-44 D46,47	Key illumination LED	Key backlight illumination
D48,49	LCD illumination LED	LCD backlight illumination
D60	Key type detection	
D62-65	market code detection	
D69-72	Reverse current prevention	Key matrix
D73	Voltage drop	
D74,79	Limiter	
D80	Reverse current prevention	

ManualsPlus.com

PARTS LIST

∗ New Parts. ⚠ indicates safety critical components.
Parts without **Parts No.** are not supplied.
Les articles non mentionnes dans le **Parts No.** ne sont pas fournis.
Teile ohne **Parts No.** werden nicht geliefert.

L: Scandinavia **K**: USA **P**: Canada
Y: PX (Far East, Hawaii) **T**: England **E**: Europe
Y: AAFES (Europe) **X**: Australia **M**: Other Areas

TH-K2AT/K2E/K2ET (Y50-580X-XX)
TX-RX UNIT (X57-674X-XX)

Ref. No.	Address	New parts	Parts No.	Description	Destination
TH-K2AT/K2E/K2ET					
1	3A,2G	*	A02-3817-02	CABINET ASSY(BATTERY CASE)	K2,M2
2	1C	*	A02-3818-23	CABINET ASSY(4KEY)	E
3	1A	*	A02-3819-23	CABINET ASSY(16KEY)	K,K2,M
3	1A	*	A02-3819-23	CABINET ASSY(16KEY)	M2,E3
4	3A,3C	*	A10-4066-11	CHASSIS	
5	3B,3D	*	A82-0053-02	REAR PANEL	
6	1B,1D	*	B09-0675-03	CAP(SP/MIC/DC IN)	
7	1A,1C	*	B10-2746-03	FRONT GLASS	
8	1B,1D	*	B11-1805-03	ILLUMINATION GUIDE(LCD)	
9	2B,2D	*	B11-1806-04	FILTER(LCD)	
10	1B,1D	*	B38-0881-05	LCD	
11	1G	*	B62-1695-00	INSTRUCTION MANUAL(CHINESE)	M2
11	1E,1G	*	B62-1696-00	INSTRUCTION MANUAL(ENGLISH)	
11	1E,1G	*	B62-1697-00	INSTRUCTION MANUAL(SPANISH)	K,K2,E
11	1E	*	B62-1697-00	INSTRUCTION MANUAL(SPANISH)	E3
11	1E	*	B62-1699-00	INSTRUCTION MANUAL(GERMAN)	E,E3
11	1E	*	B62-1702-00	INSTRUCTION MANUAL(ITALIAN)	E,E3
11	1E	*	B62-1757-00	INSTRUCTION MANUAL(FRENCH)	E,E3
11	1E	*	B62-1758-00	INSTRUCTION MANUAL(DUTCH)	E,E3
12	3A	*	B72-2128-04	MODEL NAME PLATE(TH-K2AT)	K,K2,M
12	3A	*	B72-2128-04	MODEL NAME PLATE(TH-K2AT)	M2
12	3C	*	B72-2129-04	MODEL NAME PLATE(TH-K2E)	E
12	3A	*	B72-2193-04	MODEL NAME PLATE(TH-K2ET)	E3
13	2B,2D	*	E04-0443-05	RF COAXIAL RECEPTACLE(SMA)	
14	2A,2C	*	E23-1234-04	TERMINAL(BATTERY)	
15	2B,2D	*	E29-1199-04	INTER CONNECTOR(LCD)	
16	1A,1C	*	E37-1106-05	LEAD WIRE WITH CONNECTOR(SP)	
17	2A,2C	*	F10-2464-04	SHIELDING COVER(FINAL FET)	
18	2A,2C	*	F10-2465-04	SHIELDING COVER(ANT TERMINAL)	
19	2B,2D	*	F15-1008-04	SHADOW PLATE(LCD)	
-		*	G10-1317-04	FIBROUS SHEET(SP NET)	
21	3B,3D		G53-1529-04	PACKING(VOL/ENC)	
22	2A,2C	*	G53-1572-02	PACKING(CASE)	
23	2B,2D	*	G53-1589-03	PACKING(SP/MIC)	
24	3E	*	H52-1960-02	ITEM CARTON CASE(TH-K2AT)	K,M
24	3E	*	H52-1961-02	ITEM CARTON CASE(TH-K2E)	E
24	3E	*	H52-1962-02	ITEM CARTON CASE(TH-K2ET)	E3
25	2H	*	H52-2009-02	ITEM CARTON CASE(TH-K2AT)	K2,M2
26	2F	*	H12-3146-01	PACKING FIXTURE	K,M,E
26	2F	*	H12-3146-01	PACKING FIXTURE	E3
27	3G	*	H12-3147-03	PACKING FIXTURE	K2,M2
28	2A,2C	*	J19-5451-03	HOLDER(TERMINAL)	
29	1B,1D	*	J21-8456-03	HARDWARE FIXTURE(LCD)	
30	2E,3G	*	J29-0709-04	BELT HOOK ASSY ACCESSORY	
31	2A,2C	*	J30-1284-04	SPACER(PTT KNOB)	
32	3E,2G		J69-0342-05	HANDSTRAP ACCESSORY	M,M2,E
32	3E		J69-0342-05	HANDSTRAP ACCESSORY	E3
33	2B,2D		J82-0076-05	FPC(VOL/ENC)	
45	3A,3C		J99-0376-04	ADHESIVE TAPE	
34	1B,1D		K29-5150-03	KNOB(VOL)	
35	1B,1D		K29-5159-03	KNOB(ENC)	
36	1A	*	K29-9272-02	KEY TOP(16KEY)	K,K2,M
36	1A	*	K29-9272-02	KEY TOP(16KEY)	M2,E3
37	1A,1C	*	K29-9274-03	KNOB(PTT/LAMP/MONI)	
38	1C	*	K29-9276-02	KEY TOP(4KEY)	E
A	2B,2D		N09-1492-05	PAN HEAD SCREW(SMA)	
B	1B,1D		N14-0569-04	CIRCULAR NUT(VOL/ENC)	
C	1B,1D		N14-0573-04	CIRCULAR NUT(SMA)	
D	1A,1C		N79-2035-46	PAN HEAD TAPTITE SCREW(PCB)	
E	2A,2C		N79-2040-45	PAN HEAD TAPTITE SCREW(HOLDER,R PANEL)	
F	3A,3C		N82-2007-46	PAN HEAD TAPTITE SCREW(CASE)	
G	2A,2C		N09-2433-05	PAN HEAD TAPTITE SCREW(FINAL FET)	
39	2B,2D		R39-0602-05	VARIABLE RESISTOR	
40	1A,1C		T07-0341-15	SPEAKER	
41	2F,3G	*	T90-1018-25	HELICAL ANTENNA ACCESSORY	
42	2F	*	W08-0959-15	CHARGER(230V/13.8V) ACCESSORY	M,E,E3
43	2E	*	W08-0960-15	CHARGER(120V/13.8V) ACCESSORY	K
44	2E	*	W09-0991-05	BATTERY ASSY(7.2V/1100MAH) ACCESSORY	K,M,E
44	2E	*	W09-0991-05	BATTERY ASSY(7.2V/1100MAH) ACCESSORY	E3
TX-RX UNIT (X54-674X-XX)					
0-11 : K, K2 0-21 : M, M2 2-71 : E 2-72 : E3					
D40			B30-2156-05	LED(RED)	
D41			B30-2157-05	LED(YELLOW)	
D42-44			B30-2205-05	LED(YG)	E3
D42-44			B30-2205-05	LED(YG)	K,K2,M
D42-44			B30-2205-05	LED(YG)	M2
D42,43			B30-2205-05	LED(YG)	E
D46			B30-2205-05	LED(YG)	E
D46,47			B30-2205-05	LED(YG)	E3
D46,47			B30-2205-05	LED(YG)	K,K2,M
D46,47			B30-2205-05	LED(YG)	M2
D48,49			B30-2237-05	LED(YG)	
C1			CK73HB1C103K	CHIP C 0.010UF K	
C2			CK73HB1H102K	CHIP C 1000PF K	
C3			CC73GCH1H030B	CHIP C 3.0PF B	
C4			CK73HB1H102K	CHIP C 1000PF K	
C5			CK73HB1A104K	CHIP C 0.10UF K	
C6			CK73HB1H102K	CHIP C 1000PF K	
C7			CC73HCH1H0R5B	CHIP C 0.5PF B	
C8,9			CC73GCH1H270G	CHIP C 27PF G	
C10			CK73HB1C103K	CHIP C 0.010UF K	
C11			CK73HB1H102K	CHIP C 1000PF K	
C13			CC73GCH1H0R5B	CHIP C 0.5PF B	
C14			CK73HB1H102K	CHIP C 1000PF K	
C15			CC73HCH1H120J	CHIP C 12PF J	
C17,18			CK73HB1H102K	CHIP C 1000PF K	
C19			CC73HCH1H150J	CHIP C 15PF J	
C20			CC73HCH1H080D	CHIP C 8.0PF D	
C21			CK73HB1H102K	CHIP C 1000PF K	
C22			CC73HCH1H180J	CHIP C 18PF J	
C24-26			CK73HB1H102K	CHIP C 1000PF K	
C27			C92-0628-05	CHIP-TAN 10UF 10WV	
C30			CK73HB1H102K	CHIP C 1000PF K	

E : TH-K2E **K : TH-K2AT** **M : TH-K2AT**
E3 : TH-K2ET **K2 : TH-K2AT** **M2 : TH-K2AT**

ManualsPlus.com

PARTS LIST

TX-RX UNIT (X57-674X-XX)

Ref. No.	Address	New parts	Parts No.	Description			Destination
C33			C92-0002-05	CHIP-TAN	0.22UF	35WV	
C34			C92-0714-05	TANTALUM	4.7UF	6.3WV	
C35			C92-0001-05	CHIP-C	0.1UF	35WV	
C37			CK73HB1H102K	CHIP C	1000PF	K	
C38			CK73HB1C103K	CHIP C	0.010UF	K	
C40			CK73HB1A104K	CHIP C	0.10UF	K	
C41			C92-0507-05	CHIP-TAN	4.7UF	6.3WV	
C42			CK73HB1H102K	CHIP C	1000PF	K	
C43			CK73HB1C103K	CHIP C	0.010UF	K	
C44-46			CC73HCH1H101J	CHIP C	100PF	J	
C50			CC73HCH1H220J	CHIP C	22PF	J	
C51			CC73GCH1H220J	CHIP C	22PF	J	
C52			CC73HCH1H100D	CHIP C	10PF	D	
C54			CK73HB1H102K	CHIP C	1000PF	K	
C55			CK73HB1C103K	CHIP C	0.010UF	K	
C56			CK73HB1H102K	CHIP C	1000PF	K	
C57			CC73HCH1H100D	CHIP C	10PF	D	
C61			CK73HB1H102K	CHIP C	1000PF	K	
C64			CK73HB1H102K	CHIP C	1000PF	K	
C65			CC73HCH1H180J	CHIP C	18PF	J	
C66			CK73GB0J105K	CHIP C	1.0UF	K	
C67			CK73HB1H102K	CHIP C	1000PF	K	
C68			CC73HCH1H180J	CHIP C	18PF	J	
C69			CC73HCH1H040C	CHIP C	4.0PF	C	
C70			CK73GB0J105K	CHIP C	1.0UF	K	
C71			CK73HB1H102K	CHIP C	1000PF	K	
C72			CK73GB1C104K	CHIP C	0.10UF	K	
C73			CK73HB1H102K	CHIP C	1000PF	K	
C74			CC73HCH1H330J	CHIP C	33PF	J	
C75			CK73HB1H102K	CHIP C	1000PF	K	
C76			CC73GCH1H390J	CHIP C	39PF	J	
C78			CK73HB1H102K	CHIP C	1000PF	K	
C82			CK73HB1H102K	CHIP C	1000PF	K	
C83			CK73HB1C103K	CHIP C	0.010UF	K	
C84			CK73HB1A104K	CHIP C	0.10UF	K	
C85		*	C93-0766-05	CERAMIC C	56PF	J	
C88			CC73GCH1H560J	CHIP C	56PF	J	
C89			CK73GB1H102K	CHIP C	1000PF	K	
C90-92			CK73HB1H102K	CHIP C	1000PF	K	
C93			CC73HCH1H080D	CHIP C	8.0PF	D	
C94			CK73GB1H102K	CHIP C	1000PF	K	
C95-97			CC73GCH1H120G	CHIP C	12PF	G	
C98			CC73GCH1H080B	CHIP C	8.0PF	B	
C99			CC73GCH1H130G	CHIP C	13PF	G	
C100			CC73GCH1H070B	CHIP C	7.0PF	B	
C101			CC73GCH1H240G	CHIP C	24PF	G	
C105-107			CK73HB1H102K	CHIP C	1000PF	K	
C108			CC73HCH1H101J	CHIP C	100PF	J	
C109-115			CK73HB1H102K	CHIP C	1000PF	K	
C116			C92-0544-05	CHIP-TAN	10UF	4WV	
C117,118			CK73HB1H102K	CHIP C	1000PF	K	
C124			CK73HF1C104Z	CERAMIC C	0.1UF	Z	
C125			CC73HCH1H1R5C	CHIP C	1.5PF	C	
C126			CC73HCH1H100D	CHIP C	10PF	D	
C128			CK73HB1C103K	CHIP C	0.010UF	K	
C129			CC73HCH1H110J	CHIP C	11PF	J	
C130			CK73HB1H102K	CHIP C	1000PF	K	
C131-133			CK73HB1C103K	CHIP C	0.010UF	K	
C134			CK73HB1H102K	CHIP C	1000PF	K	
C135			CC73HCH1H120J	CHIP C	12PF	J	

Ref. No.	Address	New parts	Parts No.	Description			Destination
C136			CC73HCH1H100D	CHIP C	10PF	D	
C137			CC73HCH1H050C	CHIP C	5.0PF	C	
C138			CK73HB1H102K	CHIP C	1000PF	K	
C141,142			CK73HB1H102K	CHIP C	1000PF	K	
C145			CC73HCH1H220G	CHIP C	22PF	G	
C147			CK73HB1H102K	CHIP C	1000PF	K	
C148			CC73HCH1H220G	CHIP C	22PF	G	
C152,153			CK73HB1H102K	CHIP C	1000PF	K	
C158			CC73HCH1H220G	CHIP C	22PF	G	
C159			CC73HCH1H020B	CHIP C	2.0PF	B	
C160			CC73HCH1H270G	CHIP C	27PF	G	
C161			CK73HB1H102K	CHIP C	1000PF	K	
C162		*	CC73HCH1H470G	CHIP C	47PF	G	
C163			CK73HB1H102K	CHIP C	1000PF	K	
C166			CK73HB1C103K	CHIP C	0.010UF	K	
C167,168			CK73HB1A104K	CHIP C	0.10UF	K	
C169,170			CK73HB1A683K	CHIP C	0.068UF	K	
C171			CK73HB1H102K	CHIP C	1000PF	K	
C172			CK73HB1H182K	CHIP C	1800PF	K	
C173,174		*	CC73HCH1H181J	CHIP C	180PF	J	
C175			CC73HCH1H220J	CHIP C	22PF	J	
C176			CK73HB1A104K	CHIP C	0.10UF	K	
C177			C92-0712-05	CHIP-TAN	22UF	6.3WV	
C178			CK73HB1C103K	CHIP C	0.010UF	K	
C179			CK73HB1A104K	CHIP C	0.10UF	K	
C180			CC73HCH1H121J	CHIP C	120PF	J	
C182,183			CK73HB1A104K	CHIP C	0.10UF	K	
C186			CC73HCH1H240J	CHIP C	24PF	J	
C187			CC73HCH1H020C	CHIP C	2.0PF	C	
C188			CC73HCH1H240J	CHIP C	24PF	J	
C189			CK73HB1H102K	CHIP C	1000PF	K	
C190-192			CK73HB1C103K	CHIP C	0.010UF	K	
C193			C92-0507-05	CHIP-TAN	4.7UF	6.3WV	
C194			CK73HB1A104K	CHIP C	0.10UF	K	
C195			C92-0628-05	CHIP-TAN	10UF	10WV	
C196,197			CK73HB1C682K	CHIP C	6800PF	K	
C198			CK73EF1C105Z	CHIP C	1.0UF	Z	
C201			CK73HB1H122K	CHIP C	1200PF	K	
C202			CK73HB1H271K	CHIP C	270PF	K	
C203			CC73HCH1H121J	CHIP C	120PF	J	
C204			CK73HB1A333K	CHIP C	0.033UF	K	
C205			CK73HB1A473K	CHIP C	0.047UF	K	
C206			CK73HB1C153K	CHIP C	0.015UF	K	
C207			CK73HB1C103K	CHIP C	0.010UF	K	
C208			CC73HCH1H820J	CHIP C	82PF	J	
C209			CK73HB1H102K	CHIP C	1000PF	K	
C210			CK73HB1C103K	CHIP C	0.010UF	K	
C211			CK73HB1H222K	CHIP C	2200PF	K	
C212			CK73HB1C123K	CHIP C	0.012UF	K	
C213			C92-0507-05	CHIP-TAN	4.7UF	6.3WV	
C218			CK73HB1H102K	CHIP C	1000PF	K	
C219			CK73HB1A473K	CHIP C	0.047UF	K	
C220			CK73HB1E472K	CHIP C	4700PF	K	
C221,222			CK73HB1C103K	CHIP C	0.010UF	K	
C223			CK73HB1H102K	CHIP C	1000PF	K	
C224			CK73HB1A104K	CHIP C	0.10UF	K	
C225			CK73GB0J105K	CHIP C	1.0UF	K	
C226			CK73HB1A104K	CHIP C	0.10UF	K	
C227			C92-0587-05	CHIP-TAN	2.2UF	4WV	
C228,229			CK73HB1A104K	CHIP C	0.10UF	K	

E : TH-K2E K : TH-K2AT M : TH-K2AT
E3 : TH-K2ET K2 : TH-K2AT M2 : TH-K2AT

ManualsPlus.com

PARTS LIST

TX-RX UNIT (X57-674X-XX)

Ref. No.	Address	New parts	Parts No.	Description	Destination
C230			CK73FB1C105K	CHIP C 1.0UF K	
C231,232			CK73HB1H102K	CHIP C 1000PF K	
C235,236			CK73HB1C103K	CHIP C 0.010UF K	
C237			C92-0628-05	CHIP-TAN 10UF 10WV	
C238-241			CK73HB1H102K	CHIP C 1000PF K	
C242			CK73HB1C103K	CHIP C 0.010UF K	
C243			CK73HB1H102K	CHIP C 1000PF K	
C246			C92-1327-05	CHIP-TAN 100UF 10WV	
C247,248			CK73HB1A104K	CHIP C 0.10UF K	
C249			CK73HB1H102K	CHIP C 1000PF K	
C250			CK73EF1C105Z	CHIP C 1.0UF Z	
C252			CC73HCH1H101J	CHIP C 100PF J	
C253			C92-0628-05	CHIP-TAN 10UF 10WV	
C255			C92-0628-05	CHIP-TAN 10UF 10WV	
C256,257			CK73HB1H102K	CHIP C 1000PF K	
C258			CK73HB1A104K	CHIP C 0.10UF K	
C270,271			CK73HB1H102K	CHIP C 1000PF K	
C272			CK73HB1H471K	CHIP C 470PF K	
C276			CK73HB1H102K	CHIP C 1000PF K	
C279-285			CK73HB1H102K	CHIP C 1000PF K	
C286			CK73FB1C105K	CHIP C 1.0UF K	
C290,291			CK73HB1H102K	CHIP C 1000PF K	
C293			CC73HCH1H470J	CHIP C 47PF J	
C294,295			CC73HCH1H050C	CHIP C 5.0PF C	
C297			CK73HB1A104K	CHIP C 0.10UF K	
C298			CK73HB1H102K	CHIP C 1000PF K	
C299			CK73FB1C105K	CHIP C 1.0UF K	
C300			CK73HB1H102K	CHIP C 1000PF K	
C302			CK73HB1H102K	CHIP C 1000PF K	
C303			C92-0605-05	TANTALUM C 150UF 6.3WV	
C304-306			CK73HB1H102K	CHIP C 1000PF K	
C307			CK73HB1A104K	CHIP C 0.10UF K	
C308			CK73HB1H102K	CHIP C 1000PF K	
C309			CK73FB1C105K	CHIP C 1.0UF K	
C310			CK73EF1C105Z	CHIP C 1.0UF Z	
C311			CK73GB1C104K	CHIP C 0.10UF K	
C312,313			CK73HB1A393K	CHIP C 0.039UF K	
C314			CK73HB1H102K	CHIP C 1000PF K	
C316			CK73GB1C104K	CHIP C 0.10UF K	
C317,318			CK73HB1H102K	CHIP C 1000PF K	
C319			C92-0628-05	CHIP-TAN 10UF 10WV	
C320,321			CK73HB1C822K	CHIP C 8200PF K	K,K2
C323-326			CK73HB1H102K	CHIP C 1000PF K	
C327			CK73HB1A104K	CHIP C 0.10UF K	
C328			CK73GB0J105K	CHIP C 1.0UF K	
C329			CC73FCH1H560J	CHIP C 56PF J	
C330,331			CK73HB1H102K	CHIP C 1000PF K	
C332			CK73HB1A104K	CHIP C 0.10UF K	
C335,336			CK73HB1A104K	CHIP C 0.10UF K	
C338			CK73FB1C105K	CHIP C 1.0UF K	
C339			CK73HB1A473K	CHIP C 0.047UF K	
C344-348			CK73HB1H102K	CHIP C 1000PF K	
C349			CK73HB1A104K	CHIP C 0.10UF K	M,M2,E
C349			CK73HB1A104K	CHIP C 0.10UF K	E3
C349,350			CK73HB1A104K	CHIP C 0.10UF K	K,K2
C351			CK73HB1C103K	CHIP C 0.010UF K	
C352-354			CK73HB1H102K	CHIP C 1000PF K	
C355,356			CK73HB1C103K	CHIP C 0.010UF K	
C357			CK73EF1C105Z	CHIP C 1.0UF Z	
C358			CK73HB1A473K	CHIP C 0.047UF K	

Ref. No.	Address	New parts	Parts No.	Description	Destination
C359,360			CK73HB1A104K	CHIP C 0.10UF K	
C366		*	CC73GCH1H101G	CHIP C 100PF G	
C500,501			CC73HCH1H1R5B	CHIP C 1.5PF B	
C502			CC73HCH1H030B	CHIP C 3.0PF B	
C503		*	CC73GCH1H101G	CHIP C 100PF G	
C504			CC73HCH1H020B	CHIP C 2.0PF B	
C505			CK73HB1A473K	CHIP C 0.047UF K	
C506			CK73HB1H102K	CHIP C 1000PF K	
C510			CC73HCH1H101J	CHIP C 100PF J	E,E3
C511,512			CK73HB1H471K	CHIP C 470PF K	E,E3
C514			CK73GB1H471K	CHIP C 470PF K	E,E3
C515-517			CK73HB1H471K	CHIP C 470PF K	E,E3
CN1			E40-5915-05	FLAT CABLE CONNECTOR	
CN2			E40-5929-05	PIN ASSY	
CN6		*	E40-6327-05	PIN ASSY	
CN7			E40-5630-05	PIN ASSY SOCKET	
CN8		*	E40-6308-05	PIN ASSY	
CN9		*	E40-6309-05	PIN ASSY SOCKET	
CN15			E23-1081-05	TERMINAL	
CN17			E23-1081-05	TERMINAL	E,E3
J2			E03-0190-05	DC JACK	
J3		*	E11-0484-05	3.5D PHONE JACK(3.5D)	
J4		*	E11-0483-05	2.5D PHONE JACK(2.5D)	
CN10		*	F01-1032-05	RADIATION PLATE	
F1		*	F53-0286-05	FUSE(2.5A/32V)	
F3		*	F53-0287-05	FUSE(0.5A/32V)	
CD1			L79-1474-05	TUNING COIL	
CF1			L72-0968-05	CERAMIC FILTER	
L1			L40-1001-86	SMALL FIXED INDUCTOR(10UH)	
L2			L41-4778-14	SMALL FIXED INDUCTOR	
L3			L41-8278-14	SMALL FIXED INDUCTOR	
L5,6			L40-1001-86	SMALL FIXED INDUCTOR(10UH)	
L8		*	L40-1285-71	SMALL FIXED INDUCTOR(120NH)	
L9-11		*	L40-8275-71	SMALL FIXED INDUCTOR(82NH)	
L12			L40-1075-71	SMALL FIXED INDUCTOR(10NH)	
L13			L92-0149-05	FERRITE CHIP	
L14		*	L41-4778-14	SMALL FIXED INDUCTOR	
L15			L41-6868-14	SMALL FIXED INDUCTOR	
L16			L34-4577-05	AIR-CORE COIL	
L17			L34-4606-05	AIR-CORE COIL	
L18		*	L41-2285-14	SMALL FIXED INDUCTOR	
L19			L34-4569-05	AIR-CORE COIL	
L20			L34-4567-05	AIR-CORE COIL	
L21-23			L34-4569-05	AIR-CORE COIL	
L26		*	L41-4785-14	SMALL FIXED INDUCTOR	
L27		*	L41-6885-14	SMALL FIXED INDUCTOR	
L28			L40-2775-71	SMALL FIXED INDUCTOR(27NH)	
L29			L40-2275-71	SMALL FIXED INDUCTOR(22NH)	
L32			L41-8278-14	SMALL FIXED INDUCTOR	
L35			L41-8278-14	SMALL FIXED INDUCTOR	
L38			L41-8278-14	SMALL FIXED INDUCTOR	
L40			L41-6878-14	SMALL FIXED INDUCTOR	
L41			L41-1878-14	SMALL FIXED INDUCTOR	
L45,46		*	L41-5685-14	SMALL FIXED INDUCTOR	
L49			L92-0131-05	FERRITE CHIP	
L50			L92-0137-05	FERRITE CHIP	
L53			L40-1575-71	SMALL FIXED INDUCTOR(15NH)	
L54		*	L40-5675-71	SMALL FIXED INDUCTOR(56NH)	

E : TH-K2E **K : TH-K2AT** **M : TH-K2AT**
E3 : TH-K2ET **K2 : TH-K2AT** **M2 : TH-K2AT**

ManualsPlus.com

PARTS LIST

TX-RX UNIT (X57-674X-XX)

Ref. No.	Address	New parts	Parts No.	Description	Destination
L55			L41-1078-14	SMALL FIXED INDUCTOR	
L56		*	L41-2278-14	SMALL FIXED INDUCTOR	
L58		*	L41-8285-14	SMALL FIXED INDUCTOR	
L63			L92-0140-05	FERRITE CHIP	
L64			L40-4795-85	SMALL FIXED INDUCTOR(4.7UH)	
L66		*	L40-1285-71	SMALL FIXED INDUCTOR(120NH)	
L68			L92-0161-05	BEADS CORE	
X1		*	L77-1931-05	TCXO(12.8MHZ)	
X3		*	L77-1940-05	CRYSTAL RESONATOR(7.982MHZ)	
XF1		*	L71-0619-05	MCF(38.85MHZ)	
CP1		*	RK75HA1J272J	CHIP-COM 2.7K J 1/16W	
CP2			RK75GB1J392J	CHIP-COM 3.9K J 1/16W	
CP31			RK75GB1J392J	CHIP-COM 3.9K J 1/16W	
CP32-35			RK75HA1J102J	CHIP-COM 1.0K J 1/16W	
R4			RK73HB1J102J	CHIP R 1.0K J 1/16W	
R5			RK73HB1J104J	CHIP R 100K J 1/16W	
R6			RK73HB1J102J	CHIP R 1.0K J 1/16W	
R7			RK73HB1J473J	CHIP R 47K J 1/16W	
R8			RK73HB1J104J	CHIP R 100K J 1/16W	
R9			RK73HB1J271J	CHIP R 270 J 1/16W	
R10			RK73HB1J470J	CHIP R 47 J 1/16W	
R11			RK73HB1J154J	CHIP R 150K J 1/16W	
R12			RK73HB1J470J	CHIP R 47 J 1/16W	
R13			RK73HB1J682J	CHIP R 6.8K J 1/16W	
R14			RK73HB1J332J	CHIP R 3.3K J 1/16W	
R15			RK73HB1J562J	CHIP R 5.6K J 1/16W	
R16			RK73HB1J471J	CHIP R 470 J 1/16W	
R17			RK73HB1J332J	CHIP R 3.3K J 1/16W	
R18			RK73HB1J100J	CHIP R 10 J 1/16W	
R19			RK73HB1J124J	CHIP R 120K J 1/16W	
R20			RK73HB1J102J	CHIP R 1.0K J 1/16W	
R21			RK73HB1J472J	CHIP R 4.7K J 1/16W	
R22			RK73HB1J822J	CHIP R 8.2K J 1/16W	
R24			RK73HB1J471J	CHIP R 470 J 1/16W	
R30			RK73HB1J122J	CHIP R 1.2K J 1/16W	
R31			RK73HB1J222J	CHIP R 2.2K J 1/16W	
R32			RK73HB1J102J	CHIP R 1.0K J 1/16W	
R33			RK73HB1J220J	CHIP R 22 J 1/16W	
R34			RK73HB1J332J	CHIP R 3.3K J 1/16W	
R35			RK73HB1J124J	CHIP R 120K J 1/16W	
R36			RK73HB1J100J	CHIP R 10 J 1/16W	
R37,38			RK73HB1J563J	CHIP R 56K J 1/16W	
R39			RK73HB1J271J	CHIP R 270 J 1/16W	
R41			RK73HB1J271J	CHIP R 270 J 1/16W	
R42			RK73HB1J101J	CHIP R 100 J 1/16W	
R45			RK73HB1J332J	CHIP R 3.3K J 1/16W	
R46			RK73HB1J103J	CHIP R 10K J 1/16W	
R47			RK73HB1J562J	CHIP R 5.6K J 1/16W	
R49			RK73HB1J331J	CHIP R 330 J 1/16W	
R50			RK73HB1J330J	CHIP R 33 J 1/16W	
R51			RK73HB1J471J	CHIP R 470 J 1/16W	
R52			RK73HB1J102J	CHIP R 1.0K J 1/16W	
R53,54			RK73HB1J101J	CHIP R 100 J 1/16W	
R55			RK73HB1J471J	CHIP R 470 J 1/16W	
R56			RK73HB1J102J	CHIP R 1.0K J 1/16W	
R58			RK73HB1J100J	CHIP R 10 J 1/16W	
R59			RK73HB1J123J	CHIP R 12K J 1/16W	
R60			RK73HB1J563J	CHIP R 56K J 1/16W	
R61,62			RK73HB1J221J	CHIP R 220 J 1/16W	
R64			R92-1368-05	CHIP R 0 OHM	

Ref. No.	Address	New parts	Parts No.	Description	Destination
R70-72			RK73EB2ER39K	CHIP R 0.39 K 1/4W	
R74,75			RK73HH1J104D	RESISTOR 100K D 1/16W	
R76-79			RK73HH1J154D	RESISTOR 150K D 1/16W	
R80			RK73HB1J103J	CHIP R 10K J 1/16W	
R81			RK73HB1J394J	CHIP R 390K J 1/16W	
R82			RK73HB1J273J	CHIP R 27K J 1/16W	
R83			RK73HB1J563J	CHIP R 56K J 1/16W	
R84			RK73HB1J104J	CHIP R 100K J 1/16W	
R85			RK73GB1J561J	CHIP R 560 J 1/16W	
R86			RK73HB1J562J	CHIP R 5.6K J 1/16W	
R88			RK73HB1J331J	CHIP R 330 J 1/16W	
R90			RK73HB1J331J	CHIP R 330 J 1/16W	
R91			RK73HB1J102J	CHIP R 1.0K J 1/16W	
R92			RK73HB1J332J	CHIP R 3.3K J 1/16W	
R93			RK73HB1J470J	CHIP R 47 J 1/16W	
R94			RK73HB1J331J	CHIP R 330 J 1/16W	
R95			RK73HB1J104J	CHIP R 100K J 1/16W	
R96-98			RK73HB1J823J	CHIP R 82K J 1/16W	
R99,100			RK73HB1J105J	CHIP R 1.0M J 1/16W	
R101			RK73HB1J470J	CHIP R 47 J 1/16W	
R102			R92-1368-05	CHIP R 0 OHM	
R103			RK73HB1J272J	CHIP R 2.7K J 1/16W	
R104			RK73HB1J560J	CHIP R 56 J 1/16W	
R110,111			RK73HB1J105J	CHIP R 1.0M J 1/16W	
R115			RK73HB1J562J	CHIP R 5.6K J 1/16W	
R116			RK73HB1J124J	CHIP R 120K J 1/16W	
R117			RK73HH1J272D	RESISTOR 2.7K D 1/16W	
R118			RK73HB1J273J	CHIP R 27K J 1/16W	
R119			RK73HB1J182J	CHIP R 1.8K J 1/16W	
R120			RK73HB1J272J	CHIP R 2.7K J 1/16W	
R122			RK73HB1J272J	CHIP R 2.7K J 1/16W	
R123			RK73HB1J182J	CHIP R 1.8K J 1/16W	
R124			RK73HB1J332J	CHIP R 3.3K J 1/16W	
R125			RK73HB1J561J	CHIP R 560 J 1/16W	
R126			RK73HB1J273J	CHIP R 27K J 1/16W	
R127			RK73HB1J470J	CHIP R 47 J 1/16W	
R128			RK73HB1J332J	CHIP R 3.3K J 1/16W	
R130			RK73HB1J101J	CHIP R 100 J 1/16W	
R131			RK73HB1J334J	CHIP R 330K J 1/16W	
R132			RK73HB1J222J	CHIP R 2.2K J 1/16W	
R133			RK73HB1J102J	CHIP R 1.0K J 1/16W	
R134			RK73HB1J394J	CHIP R 390K J 1/16W	
R135			RK73HB1J474J	CHIP R 470K J 1/16W	
R137			RK73HB1J472J	CHIP R 4.7K J 1/16W	
R140			RK73HB1J184J	CHIP R 180K J 1/16W	
R141			RK73HB1J183J	CHIP R 18K J 1/16W	
R142			RK73HB1J472J	CHIP R 4.7K J 1/16W	
R143			RK73HB1J471J	CHIP R 470 J 1/16W	
R144			R92-1368-05	CHIP R 0 OHM	
R145			RK73HB1J472J	CHIP R 4.7K J 1/16W	
R146			RK73HB1J183J	CHIP R 18K J 1/16W	
R147			RK73HB1J471J	CHIP R 470 J 1/16W	
R148			RK73HB1J154J	CHIP R 150K J 1/16W	
R149			RK73HB1J473J	CHIP R 47K J 1/16W	
R151			RK73HB1J681J	CHIP R 680 J 1/16W	
R152			RK73HB1J154J	CHIP R 150K J 1/16W	
R153			RK73HB1J102J	CHIP R 1.0K J 1/16W	
R155,156			RK73HB1J104J	CHIP R 100K J 1/16W	
R157,158			RK73HB1J334J	CHIP R 330K J 1/16W	
R159			RK73HB1J124J	CHIP R 120K J 1/16W	

E : TH-K2E K : TH-K2AT M : TH-K2AT
E3 : TH-K2ET K2 : TH-K2AT M2 : TH-K2AT

ManualsPlus.com

PARTS LIST

TX-RX UNIT (X57-674X-XX)

Ref. No.	Address	New parts	Parts No.	Description	Destination
R160			RK73HB1J472J	CHIP R 4.7K J 1/16W	
R161			RK73HB1J102J	CHIP R 1.0K J 1/16W	
R162			RK73HB1J184J	CHIP R 180K J 1/16W	
R163			RK73HB1J564J	CHIP R 560K J 1/16W	
R164			RK73HH1J103D	CHIP R 10K D 1/16W	
R165,166			RK73HB1J824J	CHIP R 820K J 1/16W	
R167,168			RK73HB1J184J	CHIP R 180K J 1/16W	
R169			RK73GH1J104D	CHIP R 100K D 1/16W	
R170			RK73HH1J473D	RESISTOR 47K D 1/16W	
R171		*	RK73HH1J563D	RESISTOR 56K D 1/16W	
R172			RK73HB1J103J	CHIP R 10K J 1/16W	
R173			RK73HB1J153J	CHIP R 15K J 1/16W	
R174			RK73HB1J564J	CHIP R 560K J 1/16W	
R175			RK73HB1J222J	CHIP R 2.2K J 1/16W	
R176			RK73HB1J824J	CHIP R 820K J 1/16W	
R177			RK73HB1J103J	CHIP R 10K J 1/16W	
R178			R92-1368-05	CHIP R 0 OHM	
R179			RK73HB1J224J	CHIP R 220K J 1/16W	
R180			RK73HB1J393J	CHIP R 39K J 1/16W	
R181			RK73HB1J471J	CHIP R 470 J 1/16W	
R182			RK73HB1J102J	CHIP R 1.0K J 1/16W	
R183			RK73HB1J333J	CHIP R 33K J 1/16W	
R185			RK73HB1J274J	CHIP R 270K J 1/16W	
R186			RK73GB1J683J	CHIP R 68K J 1/16W	
R188			RK73HB1J470J	CHIP R 47 J 1/16W	
R189			R92-1368-05	CHIP R 0 OHM	
R190,191			RK73HB1J473J	CHIP R 47K J 1/16W	
R192			RK73HB1J471J	CHIP R 470 J 1/16W	
R193			RK73HB1J182J	CHIP R 1.8K J 1/16W	
R194			RK73HB1J103J	CHIP R 10K J 1/16W	
R195			RK73HB1J101J	CHIP R 100 J 1/16W	
R196			RK73HB1J103J	CHIP R 10K J 1/16W	
R197			RK73HB1J101J	CHIP R 100 J 1/16W	
R198			RK73HB1J103J	CHIP R 10K J 1/16W	
R199			RK73HB1J102J	CHIP R 1.0K J 1/16W	
R200			RK73HB1J103J	CHIP R 10K J 1/16W	
R201			RK73HB1J472J	CHIP R 4.7K J 1/16W	
R202			RK73HB1J473J	CHIP R 47K J 1/16W	
R203			RK73HB1J474J	CHIP R 470K J 1/16W	
R204			RK73HB1J184J	CHIP R 180K J 1/16W	
R205			RK73HB1J101J	CHIP R 100 J 1/16W	
R206			RK73HB1J150J	CHIP R 15 J 1/16W	
R207			RK73HB1J102J	CHIP R 1.0K J 1/16W	
R208			RK73HB1J100J	CHIP R 10 J 1/16W	
R209			RK73HB1J104J	CHIP R 100K J 1/16W	
R210			RK73FB2A120J	CHIP R 12 J 1/10W	
R211			RK73HB1J474J	CHIP R 470K J 1/16W	
R212			RK73HB1J103J	CHIP R 10K J 1/16W	
R213			RK73HB1J223J	CHIP R 22K J 1/16W	
R214			RK73HB1J103J	CHIP R 10K J 1/16W	
R215			RK73HB1J474J	CHIP R 470K J 1/16W	
R216			RK73HB1J103J	CHIP R 10K J 1/16W	
R217			RK73HB1J821J	CHIP R 820 J 1/16W	
R218			R92-1368-05	CHIP R 0 OHM	
R223			RK73HB1J224J	CHIP R 220K J 1/16W	
R224			RK73HB1J183J	CHIP R 18K J 1/16W	
R226			RK73HB1J221J	CHIP R 220 J 1/16W	
R227			RK73HB1J101J	CHIP R 100 J 1/16W	
R230			RK73HB1J221J	CHIP R 220 J 1/16W	K,K2,M
R230			RK73HB1J221J	CHIP R 220 J 1/16W	M2,E3

Ref. No.	Address	New parts	Parts No.	Description	Destination
R231			RK73HB1J151J	CHIP R 150 J 1/16W	
R235,236			RK73HB1J102J	CHIP R 1.0K J 1/16W	
R237			RK73HB1J104J	CHIP R 100K J 1/16W	
R238,239			RK73HB1J102J	CHIP R 1.0K J 1/16W	
R240			RK73HB1J104J	CHIP R 100K J 1/16W	
R241-243			RK73HB1J334J	CHIP R 330K J 1/16W	
R244			R92-1252-05	CHIP R 0 OHM J 1/16W	
R246			RK73HB1J392J	CHIP R 3.9K J 1/16W	
R248			RK73HB1J392J	CHIP R 3.9K J 1/16W	
R252			RK73HB1J104J	CHIP R 100K J 1/16W	
R253,254			RK73HB1J102J	CHIP R 1.0K J 1/16W	
R255			R92-1368-05	CHIP R 0 OHM	
R256			RK73HB1J102J	CHIP R 1.0K J 1/16W	
R257			RK73HB1J563J	CHIP R 56K J 1/16W	K,K2
R258			RK73HB1J681J	CHIP R 680 J 1/16W	K,K2
R258,259			R92-1368-05	CHIP R 0 OHM	M,M2,E
R258,259			R92-1368-05	CHIP R 0 OHM	E3
R259			RK73HB1J684J	CHIP R 680K J 1/16W	K,K2
R260			RK73HB1J473J	CHIP R 47K J 1/16W	M,M2,E
R260			RK73HB1J473J	CHIP R 47K J 1/16W	E3
R260,261			RK73HB1J473J	CHIP R 47K J 1/16W	K,K2
R263			RK73HB1J103J	CHIP R 10K J 1/16W	
R264			R92-1368-05	CHIP R 0 OHM	M,M2,E
R264			R92-1368-05	CHIP R 0 OHM	E3
R271			RK73HB1J120J	CHIP R 12 J 1/16W	
R272			RK73HB1J472J	CHIP R 4.7K J 1/16W	
R273			RK73HB1J102J	CHIP R 1.0K J 1/16W	
R275-277			RK73HB1J473J	CHIP R 47K J 1/16W	
R282,283			R92-1368-05	CHIP R 0 OHM	
R285,286			R92-1368-05	CHIP R 0 OHM	
R290,291			R92-1368-05	CHIP R 0 OHM	
R310			RK73HB1J392J	CHIP R 3.9K J 1/16W	
R312			RK73HB1J472J	CHIP R 4.7K J 1/16W	
R313			RK73HB1J332J	CHIP R 3.3K J 1/16W	
R318			RK73HB1J102J	CHIP R 1.0K J 1/16W	
R323			RK73HB1J472J	CHIP R 4.7K J 1/16W	
R324,325			RK73HB1J473J	CHIP R 47K J 1/16W	
R326			R92-1368-05	CHIP R 0 OHM	
R328			RK73HB1J474J	CHIP R 470K J 1/16W	
R330			RK73HB1J471J	CHIP R 470 J 1/16W	
R332			RK73FB2A150J	CHIP R 15 J 1/10W	
R335			RK73HB1J102J	CHIP R 1.0K J 1/16W	
R336			RK73HB1J221J	CHIP R 220 J 1/16W	
R337			RK73HB1J471J	CHIP R 470 J 1/16W	
R341			R92-1368-05	CHIP R 0 OHM	
R342,343			R92-1252-05	CHIP R 0 OHM J 1/16W	
R344			RK73HB1J104J	CHIP R 100K J 1/16W	K,K2
R345			R92-1252-05	CHIP R 0 OHM J 1/16W	
R346			RK73HB1J680J	CHIP R 68 J 1/16W	
R347			RK73HB1J101J	CHIP R 100 J 1/16W	
R348			RK73HB1J221J	CHIP R 220 J 1/16W	
R349			R92-1368-05	CHIP R 0 OHM	
R351			RK73HB1J221J	CHIP R 220 J 1/16W	
R353			RK73HB1J333J	CHIP R 33K J 1/16W	
R354			R92-1368-05	CHIP R 0 OHM	
VR1		*	R32-0686-05	SEMI FIXED VARIABLE RESISTOR(500K)	
VR5			R32-0668-05	SEMI FIXED VARIABLE RESISTOR(50K)	
VR6			R32-0658-05	SEMI FIXED VARIABLE RESISTOR(100K)	
S7		*	S70-0485-05	TACT SWITCH (PTT)	

E : TH-K2E **K : TH-K2AT** **M : TH-K2AT**
E3 : TH-K2ET **K2 : TH-K2AT** **M2 : TH-K2AT**

ManualsPlus.com

PARTS LIST

TX-RX UNIT (X57-674X-XX)

Ref. No.	Address	New parts	Parts No.	Description	Destination
MIC1			T91-0580-05	MIC ELEMENT	
D1,2			1SV325	VARIABLE CAPACITANCE DIODE	
D5			HSC277	DIODE	
D6			1SV305	VARIABLE CAPACITANCE DIODE	
D7			MA2S111	DIODE	
D8,9			HSC277	DIODE	
D10			XB15A709	DIODE	
D12,13			HVC131	DIODE	
D14			MA2S111	DIODE	
D15			MA8039	ZENER DIODE	
D16			MA2S111	DIODE	
D17			HSM88AS	DIODE	
D18-21			1SV305	VARIABLE CAPACITANCE DIODE	
D22			1SS361	DIODE	
D24			MA742	DIODE	
D25			MA2S111	DIODE	
D26			1SS388	DIODE	
D27			RB706F-40	DIODE	
D30			RB521S-30	DIODE	
D31			DA221	DIODE	
D32,33			RB051L-40	DIODE	
D34		*	MAZS0270H	ZENER DIODE	
D35,36			RB521S-30	DIODE	
D60			MA2S111	DIODE	E
D62			MA2S111	DIODE	E,E3
D62-65			MA2S111	DIODE	K,K2
D63-65			MA2S111	DIODE	M,M2
D64,65			MA2S111	DIODE	E,E3
D69-73			MA2S111	DIODE	
D74			DA221	DIODE	
D79			DA221	DIODE	
D80			RB521S-30	DIODE	
IC1			LMX2316TMX	MOS IC	
IC2			NJM2904V	MOS IC	
IC3			TA31136FN	MOS IC	
IC4		*	XC6202PB52FR	MOS IC	
IC5			NJM2107F	MOS IC	
IC6			TA7368F	MOS IC	
IC8		*	90522BPFFG139	MPU	
IC9		*	TK11250CM	MOS IC	
IC10		*	S-80844CNNBB85	MOS IC	
IC11		*	S-80930CNNBG80	MOS IC	
IC12		*	TK11250CUCB	MOS IC	
IC15			AT25160N10SI27	ROM IC	
IC16			NJM2904V	MOS IC	
IC17			NJM2902V	MOS IC	
Q1			2SC5066(O)	TRANSISTOR	
Q2		*	2SC5488	TRANSISTOR	
Q3			2SK1830	FET	
Q4			2SC4617(R)	TRANSISTOR	
Q5,6		*	2SC5488	TRANSISTOR	
Q9		*	2SC5488	TRANSISTOR	
Q10			2SC4926YD	TRANSISTOR	
Q11			2SK2596	FET	
Q12			2SK3476	FET	
Q13			2SK1830	FET	
Q14		*	RN4902	TRANSISTOR	
Q15			2SC4617(R)	TRANSISTOR	
Q16			3SK318	FET	

Ref. No.	Address	New parts	Parts No.	Description	Destination
Q17			2SK1215(E)	FET	
Q20			2SK1830	FET	
Q21			2SC4617(R)	TRANSISTOR	
Q22		*	RN2105	TRANSISTOR	
Q23			KTC4082	TRANSISTOR	
Q24		*	2SC5488	TRANSISTOR	
Q27			2SK1830	FET	
Q29			2SC4919	TRANSISTOR	
Q30			2SC4617(R)	TRANSISTOR	
Q31			2SK1830	FET	
Q33			2SB1184(Q,R)	TRANSISTOR	
Q34,35			2SK1830	FET	
Q36			2SJ347	FET	
Q37			2SB1184(Q,R)	TRANSISTOR	
Q38			2SC4617(R)	TRANSISTOR	
Q41		*	RN2105	TRANSISTOR	
Q47			RN1701	TRANSISTOR	
Q50			2SK1830	FET	
Q51		*	RN4902	TRANSISTOR	
Q52		*	RN1107	TRANSISTOR	
Q53			RN2701	TRANSISTOR	
Q55		*	CPH3317	FET	
Q56		*	CPH3417	FET	
Q57		*	RN2105	TRANSISTOR	
Q58			2SK1830	FET	M,M2,E
Q58			2SK1830	FET	E3
Q58,59			2SK1830	FET	K,K2
TH1		*	B57331V2103J	THERMISTOR	
TH3,4			B57331V2104J	THERMISTOR	

E : TH-K2E K : TH-K2AT M : TH-K2AT
E3 : TH-K2ET K2 : TH-K2AT M2 : TH-K2AT

ManualsPlus.com

EXPLODED VIEW (TH-K2AT / K2ET)

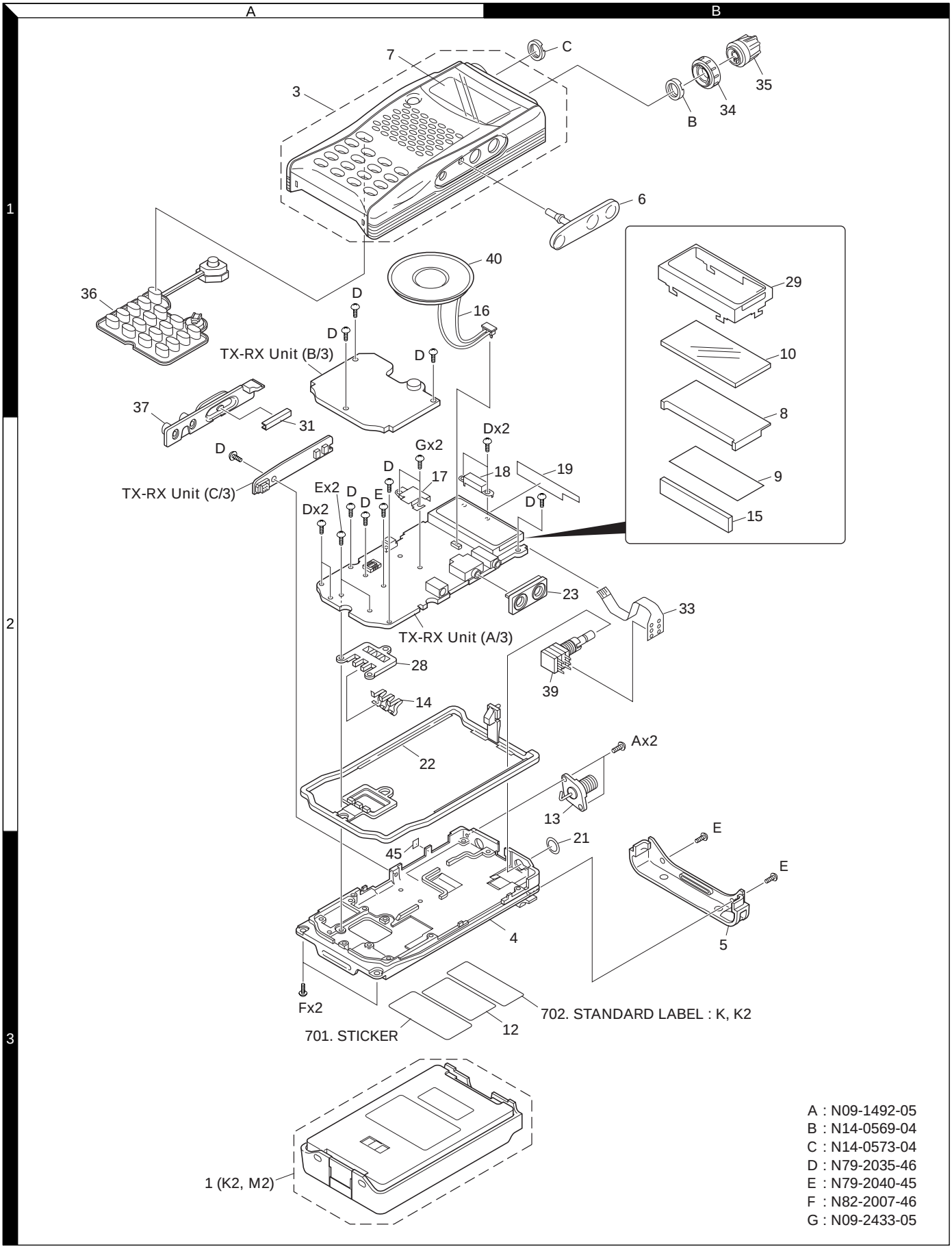

Parts with the exploded numbers larger than 700 are not supplied.

ManualsPlus.com

EXPLODED VIEW (TH-K2E)

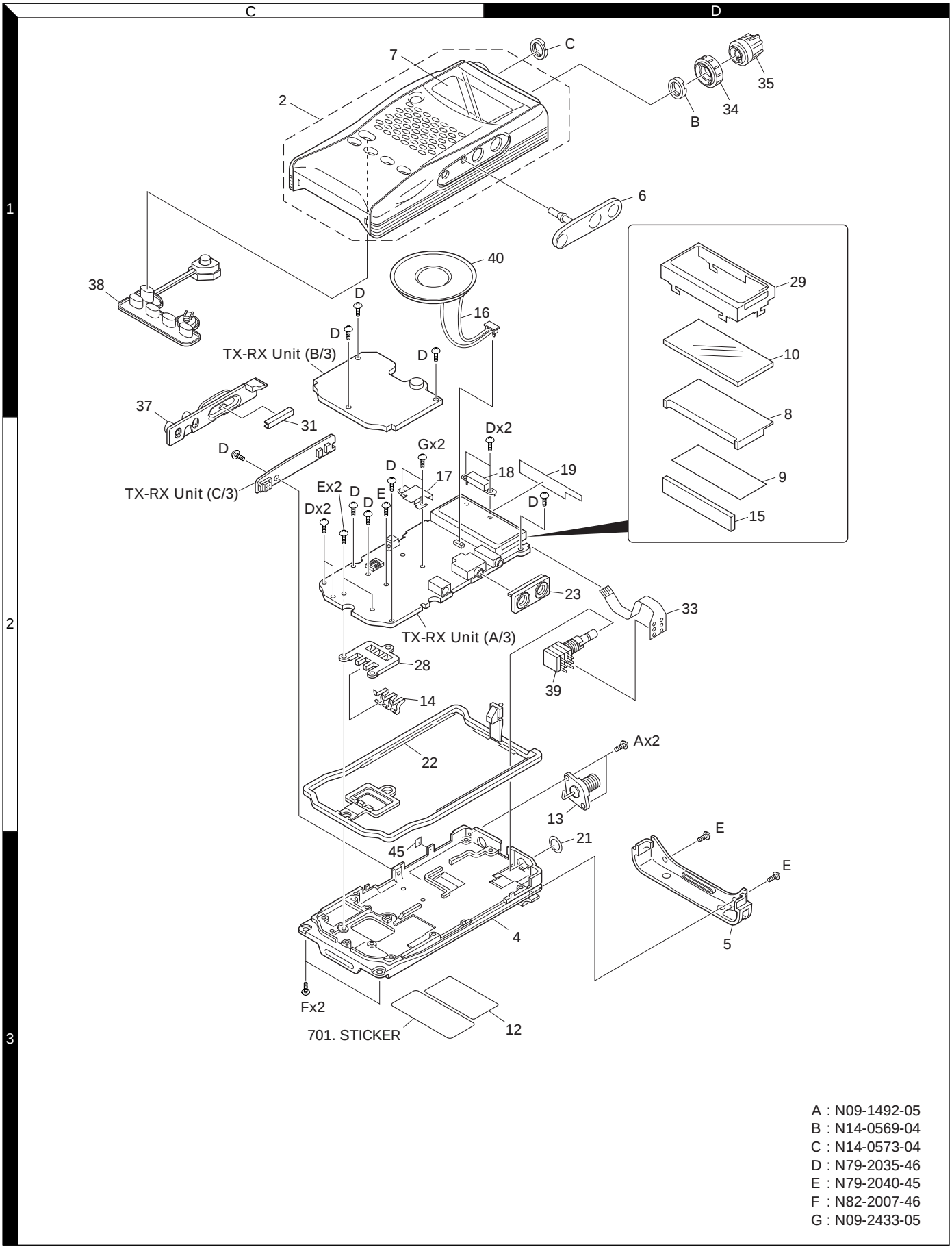

A : N09-1492-05
B : N14-0569-04
C : N14-0573-04
D : N79-2035-46
E : N79-2040-45
F : N82-2007-46
G : N09-2433-05

 Parts with the exploded numbers larger than 700 are not supplied.

ManualsPlus.com

PACKING (K, M, E and E3 types)

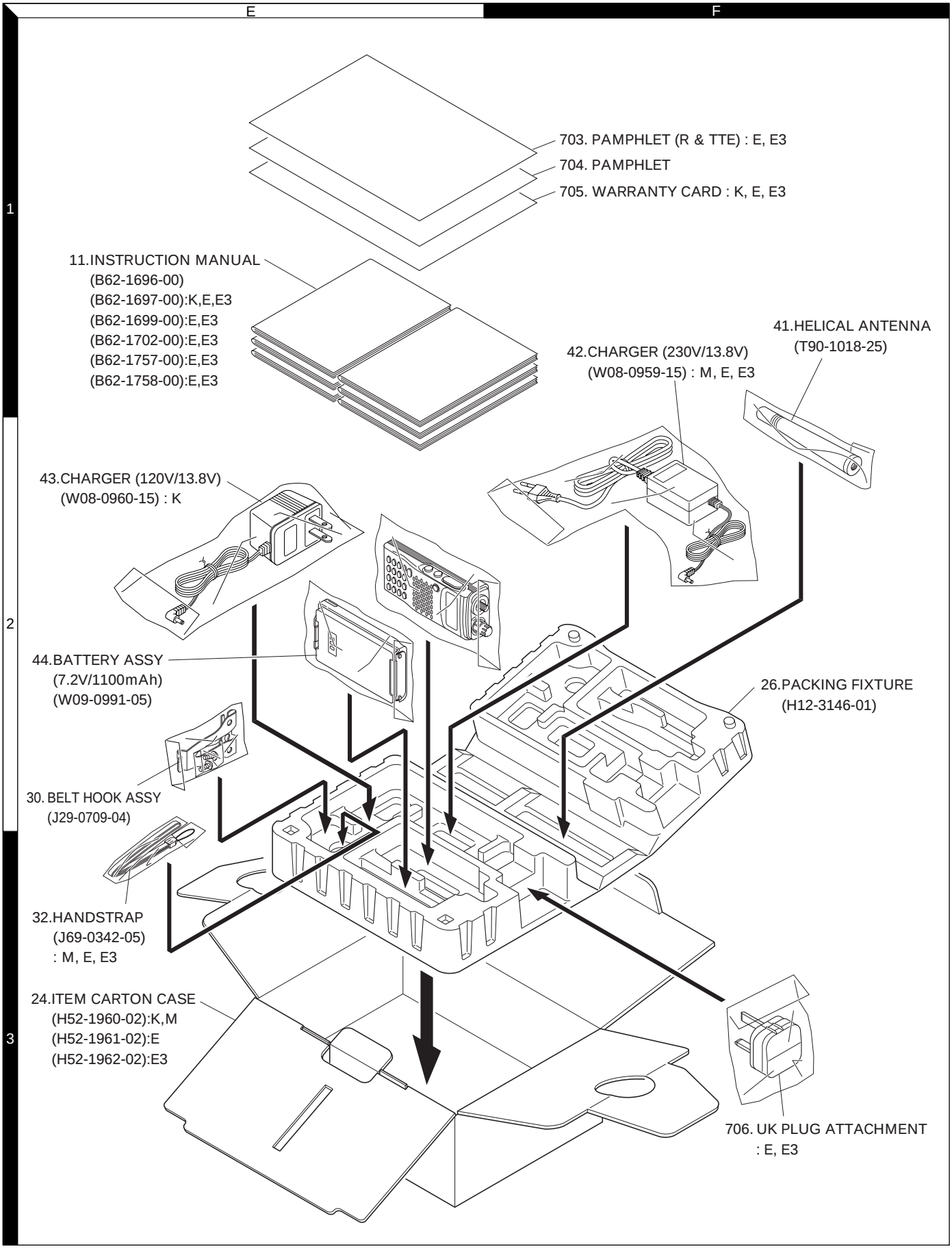

Parts with the exploded numbers larger than 700 are not supplied.

ManualsPlus.com

PACKING (K2 and M2 types)

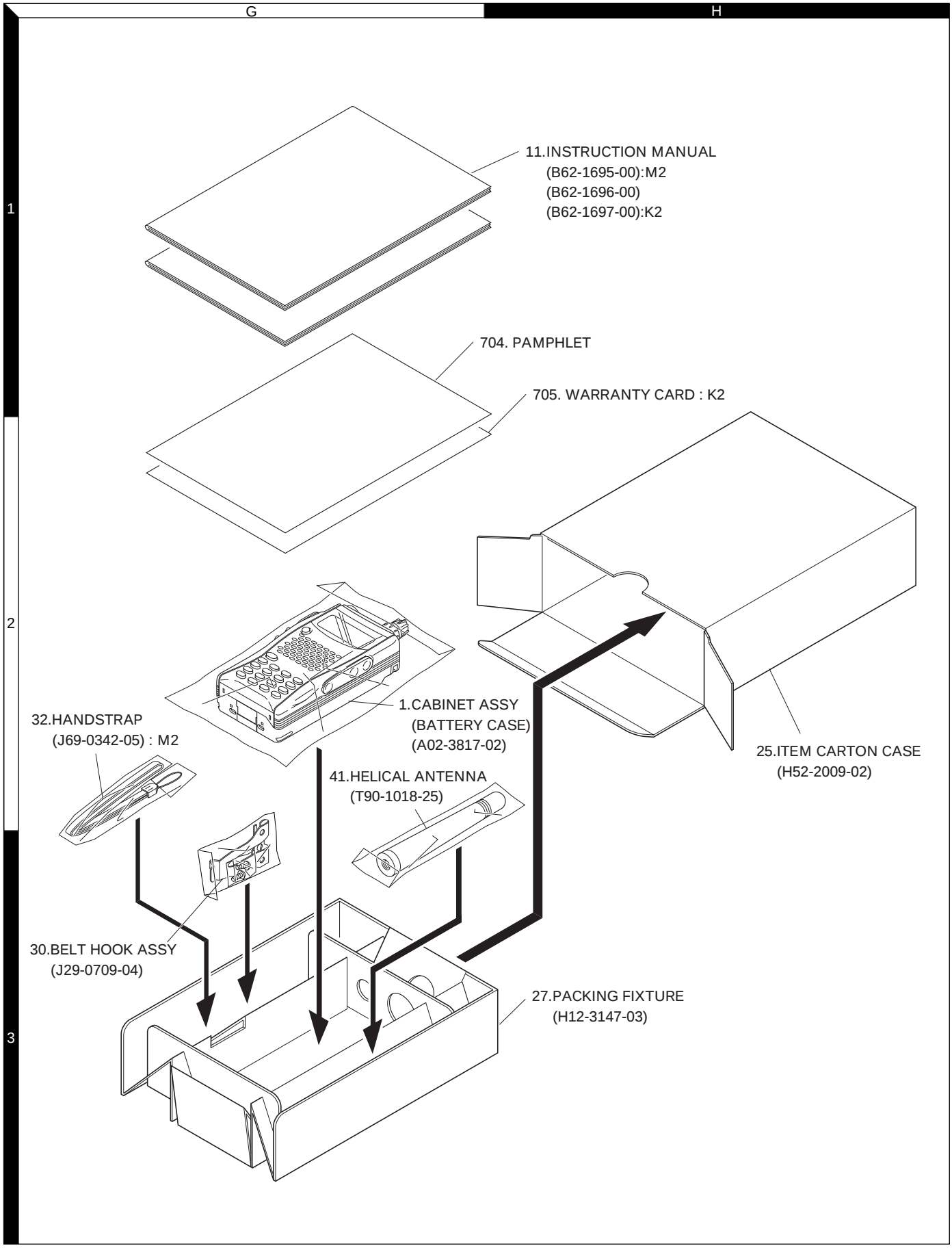

 Parts with the exploded numbers larger than 700 are not supplied.

ManualsPlus.com

ADJUSTMENT

Single Tone Mode

This mode is used to check the DTMF deviation.

Operation

■ 16key (K, K2, M, M2 and E3 types)

1. Press the [PTT] key on the transceiver to switch to the transmission mode.
2. Press the [MONI] key to enter the single tone mode.
3. Press any key from [1] to [8] keys to transmit a single tone. The single tone is consisting of eight frequencies.
   [1] 697Hz
   [2] 770Hz
   [3] 852Hz
   [4] 941Hz
   [5] 1209Hz
   [6] 1336Hz
   [7] 1477Hz
   [8] 1633Hz
4. When the [MONI] key is pressed again during the transmission, the transceiver switches to the reception mode, the single tone mode turns OFF.

■ 4key (E type)

1. Press the [PTT] key on the transceiver to switch to the transmission mode.
2. Press the [MONI] key to enter the single tone mode.
3. When the [VFO] key is pressed during the transmission, a DTMF "D" dual tone (combination of 1633 Hz and 941 Hz frequencies) is transmitted.
4. When the [MR] key is pressed during the transmission, single-tone 1633 Hz is transmitted.
5. When the [MONI] key is pressed again during the transmission, the transceiver switch to the reception mode, the single tone mode is turned OFF.

- The single tone mode can be enabled only during the transmission.
- When DTMF memory is transmitted in the single tone mode, the single tone mode turns OFF.

Adjustment Mode

This mode is used to replace or readjust the IC15 (EEPROM).
Adjust the following adjustment items after setting the transceiver to "Adjustment Mode".

■ Adjustment Items

A. Overvoltage warning reference voltage (14.8V [DC IN])
B. Battery terminal reference voltage (7.5 V [Battery terminal])
C. Squelch (SQL1, SQL2)
D. S-meter (Two segments in S-meter light, all segments in S-meter light)
E. RX BPF (Lower limit frequency, center frequency, upper limit frequency)
F. 7.5V TX H power (Lower limit frequency, center frequency, upper limit frequency)
G. 7.5V TX M power (Lower limit frequency, center frequency, upper limit frequency)
H. 7.5V TX L power (Lower limit frequency, center frequency, upper limit frequency)
I. 13.8V TX H power (Lower limit frequency, center frequency, upper limit frequency)
J. 13.8V TX M power (Lower limit frequency, center frequency, upper limit frequency)
K. 13.8V TX L power (Lower limit frequency, center frequency, upper limit frequency)
L. DCS modulation balance
M. Tone deviation (Lower limit frequency, center frequency, upper limit frequency)
N. DCS deviation (Lower limit frequency, center frequency, upper limit frequency)
O. VOX sensitivity (Level 1, level 9)

■ Operation in Adjustment Mode

1. Turn the transceiver ON.
2. Set the tone frequency to 151.4 Hz and the DCS code to 023 in Menu Mode to adjust tone and DCS modulation.
3. Set Adjustment Mode by shorting two lands (SET) on the component side of the TX-RX unit (A/3).

Short these two lands

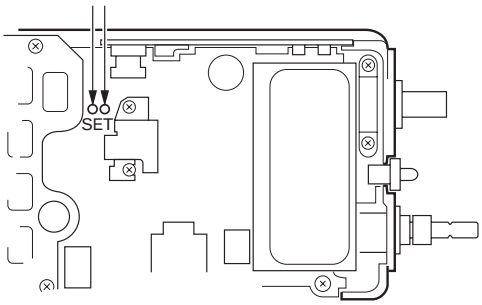

4. When the Adjustment Mode is set, the "Overvoltage warning reference voltage (14.8V [DC IN])" adjustment item is displayed. (The "▭" icon on the upper side of the LCD blinks while the transceiver is in the Adjustment Mode.)
   The current adjustment value is displayed at the lower digits of the frequency display, and the value stored in the EEPROM is displayed on the memory channel number display.

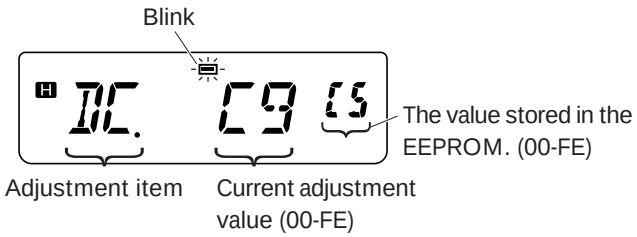

5. The functions of transceiver keys in Adjustment Mode are as follows:

ManualsPlus.com

ADJUSTMENT

Key name	[key]	[F] key → [key]
PTT	Transmit while this key is held down.	Selecting a TX power (High/Mid/Low)
LAMP	Changes adjustment items. (Forward) When this key is pressed on the frequency display, it switches to the adjustment display.	Lamp always ON
MONI	Changes adjustment items. (Back) When this key is pressed on the frequency display, it switches to the adjustment display.	Squelch level setting mode
MENU	Write adjustment values (adjustment display) Sound error tone (frequency display)	-
F	Function mode/MHz mode ON	Function mode/MHz mode OFF
VFO	VFO mode When this key is pressed on the adjustment display, it switches to the frequency display.	M→V (Memory shift)
MR	Memory mode When this key is pressed on the adjustment display, it switches to the frequency display.	M.IN (Memory registration)
CALL	Switch between frequency display and adjustment display. Each time this key is pressed, the LCD switches between the frequency display and adjustment display.	-
Encoder	Increase or decrease adjustment values (00 - FE). (adjustment display) Increase or decrease frequency and memory channel number. (frequency display)	Increase or decrease frequency (1MHz step). (frequency display)

6. To exit the Adjustment Mode, turn the transceiver OFF.

Note:

- When you press [LAMP] or [MONI] key, ensure the bosses of rubber keys align with the LAMP and MONI contacts of the PTT PCB (C/3).
- In the Adjustment Mode, Transmission and Reception frequencies becomes extensive.

A. Overvoltage warning reference voltage (14.8V [DC IN])

(1) Press the [LAMP] or [MONI] key on the transceiver to display "DC" on the LCD.
The current voltage value is displayed at the lower digits of the frequency display, and the value stored in the EEPROM is displayed on the memory channel number display.

(2) Press the [MENU] key to write the current voltage value into the EEPROM.

B. Battery terminal reference voltage (7.5 V [Battery terminal])

(1) Press the [LAMP] or [MONI] key on the transceiver to display "BAT" on the LCD.
Press the [F] key and then the [PTT] key repeatedly to turn the "L" icon ON. The current voltage value is displayed at the lower digits of the frequency display, and the value stored in the EEPROM is displayed on the memory channel number display.

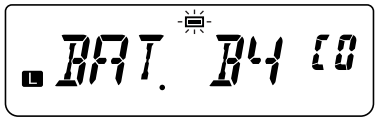

(2) Press the [PTT] key to enable the transmit mode.
(3) Adjust the output voltage from DC power supply until the voltage at the battery terminal becomes 7.5V while the transceiver is transmitting.
(4) Press the [MENU] key to write the current voltage value into the EEPROM.

C. Squelch (SQL1, SQL2)

①Squelch (SQL1)

(1) Press the [LAMP] or [MONI] key on the transceiver to display "SQ1" on the LCD.
The detected DC voltage value to the current noise level is displayed at the lower digits of the frequency display, and the value stored in the EEPROM is displayed on the memory channel number display.

(2) Press the [MENU] key to write the current noise level value into the EEPROM.

②Squelch (SQL2)

(1) Press the [LAMP] or [MONI] key on the transceiver to display "SQ2" on the LCD.

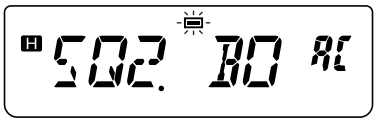

(2) Press the [MENU] key to write the current noise level value into the EEPROM.

ManualsPlus.com

ADJUSTMENT

D. S-meter (Two segments in S-meter light, all segments in S-meter light)

①S-meter (Two segments in S-meter light)

(1) Press the [LAMP] or [MONI] key on the transceiver to display "S1" on the LCD.
The current RSSI level value is displayed at the lower digits of the frequency display, and the value stored in the EEPROM is displayed on the memory channel number display.

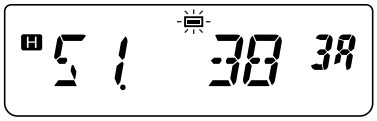

(2) Press the [MENU] key to write the current RSSI level value into the EEPROM.

②S-meter (All segments in S-meter light)

(1) Press the [LAMP] or [MONI] key on the transceiver to display "S9" on the LCD.

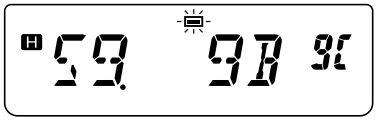

(2) Press the [MENU] key to write the current RSSI level value into the EEPROM.

E. RX BPF (Lower limit frequency, center frequency, upper limit frequency)

①RX BPF (Lower limit frequency)

(1) Press the [LAMP] or [MONI] key on the transceiver to display "BPL" on the LCD.
The current BPF tuning value is displayed at the lower digits of the frequency display, and the value stored in the EEPROM is displayed on the memory channel number display.

(2) Press the [VFO], [MR] or [CALL] key to switch to the frequency display.
(3) Turn the encoder to display the lower limit frequency on the LCD.
(4) Press the [CALL] key to switch to the adjustment display.
(5) Turn the encoder to change the current BPF tuning value and adjust RX BPF.
(6) Press the [MENU] key to write the current BPF tuning value into the EEPROM.

②RX BPF (Center frequency)

(1) Press the [LAMP] or [MONI] key on the transceiver to display "BPC" on the LCD.

(2) Press the [VFO], [MR] or [CALL] key to switch to the frequency display.
(3) Turn the encoder to display the center frequency on the LCD.
(4) Repeat steps (4) to (6) of "①RX BPF (Lower limit frequency)" described on page 29.

③RX BPF (Upper limit frequency)

(1) Press the [LAMP] or [MONI] key on the transceiver to display "BPH" on the LCD.

(2) Press the [VFO], [MR] or [CALL] key to switch to the frequency display.
(3) Turn the encoder to display the upper frequency on the LCD.
(4) Repeat steps (4) to (6) of "①RX BPF (Lower limit frequency)" described on page 29.

F. 7.5V TX H power (Lower limit frequency, center frequency, upper limit frequency)

①7.5V TX H power (Lower limit frequency)

(1) Press the [LAMP] or [MONI] key on the transceiver to display "P7L" on the LCD.
In this case, the "H" icon appears.
The current APC value is displayed at the lower digits of the frequency display, and the value stored in the EEPROM is displayed on the memory channel number display.

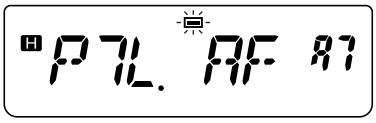

(2) Press the [VFO], [MR] or [CALL] key to switch to the frequency display.
(3) Turn the encoder to display the lower limit frequency on the LCD.
(4) Press the [CALL] key to switch to the adjustment display.
(5) Press the [PTT] key to enable the transmit mode.
(6) Adjust the output voltage from DC power supply until the voltage at the battery terminal becomes 7.5V while the transceiver is transmitting.
(7) Turn the encoder to change the current APC value and adjust the transmission power.

ManualsPlus.com

(8) Press the [MENU] key to write the current APC value into the EEPROM.

②7.5V TX H power (Center frequency)
(1) Press the [LAMP] or [MONI] key on the transceiver to display "P7C" on the LCD.
In this case, the "H" icon appears.

(2) Press the [VFO], [MR] or [CALL] key to switch to the frequency display.
(3) Turn the encoder to display the center frequency on the LCD.
(4) Repeat steps (4) to (8) of "①7.5V TX H power (Lower limit frequency)" described on page 29.

③7.5V TX H power (Upper limit frequency)
(1) Press the [LAMP] or [MONI] key on the transceiver to display "P7H" on the LCD.
In this case, the "H" icon appears.

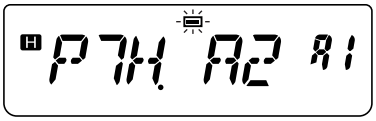

(2) Press the [VFO], [MR] or [CALL] key to switch to the frequency display.
(3) Turn the encoder to display the upper limit frequency on the LCD.
(4) Repeat steps (4) to (8) of "①7.5V TX H power (Lower limit frequency)" described on page 29.

G. 7.5V TX M power (Lower limit frequency, center frequency, upper limit frequency)

①7.5V TX M power (Lower limit frequency)
(1) Press the [LAMP] or [MONI] key on the transceiver to display "P7L" on the LCD.
In this case, the "M" icon appears.
The current APC value is displayed at the lower digits of the frequency display, and the value stored in the EEPROM is displayed on the memory channel number display.

(2) Press the [VFO], [MR] or [CALL] key to switch to the frequency display.
(3) Turn the encoder to display the lower limit frequency on the LCD.
(4) Press the [CALL] key to switch to the adjustment display.
(5) Press the [PTT] key to enable the transmit mode.
(6) Adjust the output voltage from DC power supply until the voltage at the battery terminal becomes 7.5V while the transceiver is transmitting.
(7) Turn the encoder to change the current APC value and adjust the transmission power.
(8) Press the [MENU] key to write the current APC value into the EEPROM.

②7.5V TX M power (Center frequency)
(1) Press the [LAMP] or [MONI] key on the transceiver to display "P7C" on the LCD.
In this case, the "M" icon appears.

(2) Press the [VFO], [MR] or [CALL] key to switch to the frequency display.
(3) Turn the encoder to display the center frequency on the LCD.
(4) Repeat steps (4) to (8) of "①7.5V TX M power (Lower limit frequency)" described on page 30.

③7.5VTX M power (Upper limit frequency)
(1) Press the [LAMP] or [MONI] key on the transceiver to display "P7H" on the LCD.
In this case, the "M" icon appears.

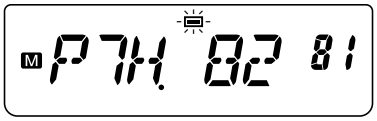

(2) Press the [VFO], [MR] or [CALL] key to switch to the frequency display.
(3) Turn the encoder to display upper limit frequency on the LCD.
(4) Repeat steps (4) to (8) of "①7.5V TX M power (Lower limit frequency)" described on page 30.

H. 7.5V TX L power (Lower limit frequency, center frequency, upper limit frequency)

①7.5V TX L power (Lower limit frequency)
(1) Press the [LAMP] or [MONI] key on the transceiver to display "P7L" on the LCD.
In this case, the "L" icon appears.
The current APC value is displayed at the lower digits of the frequency display, and the value stored in the EEPROM is displayed on the memory channel number display.

ManualsPlus.com

ADJUSTMENT

(2) Press the [VFO], [MR] or [CALL] key to switch to the frequency display.
(3) Turn the encoder to display the lower limit frequency on the LCD.
(4) Press the [CALL] key to switch to the adjustment display.
(5) Press the [PTT] key to enable the transmit mode.
(6) Adjust the output voltage from DC power supply until the voltage at the battery terminal becomes 7.5V while the transceiver is transmitting.
(7) Turn the encoder to change the current APC value and adjust the transmission power.
(8) Press the [MENU] key to write the current APC value into the EEPROM.

②7.5V TX L power (Center frequency)
(1) Press the [LAMP] or [MONI] key on the transceiver to display "P7C" on the LCD.
In this case, the "L" icon appears.

(2) Press the [VFO], [MR] or [CALL] key to switch to the frequency display.
(3) Turn the encoder to display the center frequency on the LCD.
(4) Repeat steps (4) to (8) of "①7.5V TX L power (Lower limit frequency)" described on page 30.

③7.5V TX L power (Upper limit frequency)
(1) Press the [LAMP] or [MONI] key on the transceiver to display "P7H" on the LCD.
In this case, the "L" icon appears.

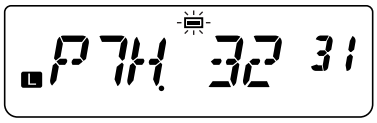

(2) Press the [VFO], [MR] or [CALL] key to switch to the frequency display.
(3) Turn the encoder to display the upper limit frequency on the LCD.
(4) Repeat steps (4) to (8) of "①7.5V TX L power (Lower limit frequency)" described on page 30.

I. 13.8V TX H power (Lower limit frequency, center frequency, upper limit frequency)

①13.8V TX H power (Lower limit frequency)
(1) Press the [LAMP] or [MONI] key on the transceiver to display "P13L" on the LCD.
In this case, the "H" icon appears.

The current APC value is displayed at the lower digits of the frequency display, and the value stored in the EEPROM is displayed on the memory channel number display.

(2) Press the [VFO], [MR] or [CALL] key to switch to the frequency display.
(3) Turn the encoder to display the lower limit frequency on the LCD.
(4) Press the [CALL] key to switch to the adjustment display.
(5) Press the [PTT] key to enable the transmit mode.
(6) Turn the encoder to change the current APC value and adjust the transmission power.
(7) Press the [MENU] key to write the current APC value into the EEPROM.

②13.8V TX H power (Center frequency)
(1) Press the [LAMP] or [MONI] key on the transceiver to display "P13C" on the LCD.
In this case, the "H" icon appears.

(2) Press the [VFO], [MR] or [CALL] key to switch to the frequency display.
(3) Turn the encoder to display center frequency on the LCD.
(4) Repeat steps (4) to (7) of "①13.8V TX H power (Lower limit frequency)" described on page 31.

③13.8V TX H power (Upper limit frequency)
(1) Press the [LAMP] or [MONI] key on the transceiver to display "P13H" on the LCD.
In this case, the "H" icon appears.

(2) Press the [VFO], [MR] or [CALL] key to switch to the frequency display.
(3) Turn the encoder to display upper limit frequency on the LCD.
(4) Repeat steps (4) to (7) of "①13.8V TX H power (Lower limit frequency)" described on page 31.

ManualsPlus.com

ADJUSTMENT

J. 13.8V TX M power (Lower limit frequency, center frequency, upper limit frequency)

①13.8V TX M power (Lower limit frequency)

(1) Press the [LAMP] or [MONI] key on the transceiver to display "P13L" on the LCD.
In this case, the "M" icon appears.
The current APC value is displayed at the lower digits of the frequency display, and the value stored in the EEPROM is displayed on the memory channel number display.

(2) Press the [VFO], [MR] or [CALL] key to switch to the frequency display.
(3) Turn the encoder to display the lower limit frequency on the LCD.
(4) Press the [CALL] key to switch to the adjustment display.
(5) Press the [PTT] key to enable the transmit mode.
(6) Turn the encoder to change the current APC value and adjust the transmission power.
(7) Press the [MENU] key to write the current APC value into the EEPROM.

②13.8V TX M power (Center frequency)

(1) Press the [LAMP] or [MONI] key on the transceiver to display "P13C" on the LCD.
In this case, the "M" icon appears.

(2) Press the [VFO], [MR] or [CALL] key to switch to the frequency display.
(3) Turn the encoder to display the center frequency on the LCD.
(4) Repeat steps (4) to (7) of "①13.8V TX M power (Lower limit frequency)" described on page 31.

③13.8V TX M power (Upper limit frequency)

(1) Press the [LAMP] or [MONI] key on the transceiver to display "P13H" on the LCD.
In this case, the "M" icon appears.

(2) Press the [VFO], [MR] or [CALL] key to switch to the frequency display.
(3) Turn the encoder to display the upper limit frequency on the LCD.
(4) Repeat steps (4) to (7) of "①13.8V TX M power (Lower limit frequency)" described on page 32.

K. 13.8V TX L power (Lower limit frequency, center frequency, upper limit frequency)

①13.8V TX L power (Lower limit frequency)

(1) Press the [LAMP] or [MONI] key on the transceiver to display "P13L" on the LCD.
In this case, the "L" icon appears.
The current APC value is displayed at the lower digits of the frequency display, and the value stored in the EEPROM is displayed on the memory channel number display.

(2) Press the [VFO], [MR] or [CALL] key to switch to the frequency display.
(3) Turn the encoder to display the lower limit frequency on the LCD.
(4) Press the [CALL] key to switch to the adjustment display.
(5) Press the [PTT] key to enable transmit mode.
(6) Turn the encoder to change the current APC value and adjust transmission power.
(7) Press the [MENU] key to write the current APC value into the EEPROM.

②13.8V TX L power (Center frequency)

(1) Press the [LAMP] or [MONI] key on the transceiver to display "P13C" on the LCD.
In this case, the "L" icon appears.

(2) Press the [VFO], [MR] or [CALL] key to switch to the frequency display.
(3) Turn the encoder to display the center frequency on the LCD.
(4) Repeat steps (4) to (7) of "①13.8V TX L power (Lower limit frequency)" described on page 32.

③13.8V TX L power (Upper limit frequency)

(1) Press the [LAMP] or [MONI] key on the transceiver to display "P13H" on the LCD.
In this case, the "L" icon appears.

ManualsPlus.com

ADJUSTMENT

(2) Press the [VFO], [MR] or [CALL] key to switch to the frequency display.
(3) Turn the encoder to display the upper limit frequency on the LCD.
(4) Repeat steps (4) to (7) of "①13.8V TX L power (Lower limit frequency)" described on page 32.

L. DCS modulation balance

(1) Press the [LAMP] or [MONI] key on the transceiver to display "DCS.BAL" on the LCD. Press the [F] key and then the [PTT] key repeatedly to turns the "L" icon ON.

(2) When the [PTT] key is pressed to enable transmit mode, a 100Hz square waveform is internally generated and modulated.
(3) While observing the waveforms on the oscilloscope, turn the semi-fixed volume (VR6) to adjust the DCS modulation waveform to a square waveform.
(4) When the DCS modulation waveform becomes a square waveform, release the [PTT] key.

M.Tone deviation (Lower limit frequency, center frequency, upper limit frequency)

①Tone deviation (Lower limit frequency)

(1) Press the [LAMP] or [MONI] key on the transceiver to display "DVL" on the LCD.
In this case, the "T" icon appears. Press the [F] key and then the [PTT] key repeatedly to turn the "L" icon ON.
The current adjustment value is displayed at the lower digits of the frequency display, and the value stored in the EEPROM is displayed on the memory channel number display.

(2) Press the [VFO], [MR] or [CALL] key to switch to the frequency display.
(3) Turn the encoder to display the lower limit frequency on the LCD.
(4) Press the [CALL] key to switch to the adjustment display.
(5) When the [PTT] key is pressed to enable transmit mode, a preset tone frequency (151.4Hz) is internally generated and modulated.
(6) Turn the encoder to change the current adjustment value and adjust tone deviation.
(7) Press the [MENU] key to write the current adjustment value into the EEPROM.

②Tone deviation (Center frequency)

(1) Press the [LAMP] or [MONI] key on the transceiver to display "DVC" on the LCD.
In this case, the "T" icon appears. Press the [F] key and then the [PTT] key repeatedly to turn the "L" icon ON.

(2) Press the [VFO], [MR] or [CALL] key to switch to the frequency display.
(3) Turn the encoder to display the center frequency on the LCD.
(4) Repeat steps (4) to (7) of "①Tone deviation (Lower limit frequency)" described on page 33.

③Tone deviation (Upper limit frequency)

(1) Press the [LAMP] or [MONI] key on the transceiver to display "DVH" on the LCD.
In this case, the "T" icon appears. Press the [F] key and then the [PTT] key repeatedly to turn the "L" icon ON.

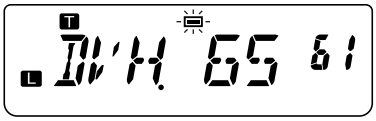

(2) Press the [VFO], [MR] or [CALL] key to switch to the frequency display.
(3) Turn the encoder to display the upper limit frequency on the LCD.
(4) Repeat steps (4) to (7) of "①Tone deviation (Lower limit frequency)" described on page 33.

N. DCS deviation (Lower limit frequency, center frequency, upper limit frequency)

①DCS deviation (Lower limit frequency)

(1) Press the [LAMP] or [MONI] key on the transceiver to display "DVL" on the LCD.
In this case, the "DCS" icon appears. Press the [F] key and then the [PTT] key repeatedly to turn the "L" icon ON.
The current adjustment value is displayed at the lower digits of the frequency display, and the value stored in the EEPROM is displayed on the memory channel number display.

(2) Press the [VFO], [MR] or [CALL] key to switch to the frequency display.
(3) Turn the encoder to display the lower limit frequency on the LCD.

ManualsPlus.com

ADJUSTMENT

(4) Press the [CALL] key to switch to the adjustment display.
(5) When the [PTT] key is pressed to enable transmit mode, a preset DCS code (023) is internally generated and modulated.
(6) Turn the encoder to change the current adjustment value and adjust DCS deviation.
(7) Press the [MENU] key to write the current adjustment value into the EEPROM.

②DCS deviation (Center frequency)
(1) Press the [LAMP] or [MONI] key on the transceiver to display "DVC" on the LCD.
In this case, the "DCS" icon appears.

(2) Press the [VFO], [MR] or [CALL] key to switch to the frequency display.
(3) Turn the encoder to display the center frequency on the LCD.
(4) Repeat steps (4) to (7) of "①DCS deviation (Lower limit frequency)" described on page 33.

③DCS deviation (Upper limit frequency)
(1) Press the [LAMP] or [MONI] key on the transceiver to display "DVH" on the LCD.
In this case, the "DCS" icon appears.

(2) Press the [VFO], [MR] or [CALL] key to switch to the frequency display.
(3) Turn the encoder to display the upper limit frequency on the LCD.
(4) Repeat steps (4) to (7) of "①DCS deviation (Lower limit frequency)" described on page 33.

O. VOX sensitivity (Level 1, level 9)
①VOX sensitivity (Level 1)
(1) Press the [LAMP] or [MONI] key on the transceiver to display "VOX1" on the LCD.
Press the [F] key and then the [PTT] key repeatedly to turn the "L" icon ON.
The current microphone input level value is displayed at the lower digits of the frequency display, and the value stored in the EEPROM is displayed on the memory channel number display.

(2) Input a specified AG signal to microphone input.
(3) Press the [MENU] key to write the current microphone input level value into the EEPROM.

②VOX sensitivity (Level 9)
(1) Press the [LAMP] or [MONI] key on the transceiver to display "VOX9" on the LCD.
(2) Input a specified AG signal to microphone input.
(3) Press the [MENU] key to write the current microphone input level value into the EEPROM.

ManualsPlus.com

ADJUSTMENT

Common Section

Item	Condition	Measurement			Adjustment			Specifications/ Remarks
		Test equipment	Unit	Terminal	Unit	Parts	Method	
1. Setting and resetting	Connect the optional PG-2W DC cable to the power supply. DC IN terminal voltage: 13.8V 1) Total illumination display confirmation Turn the Transceiver Power ON by pressing the power switch while the [F] key is pressed. While the [F] key is pressed, all LCD segments light. 2) Full-resetting After confirming that all LCD segments have lighted described in the Step 1 above, release the [F] key, and then press the [F] key twice while "FL.RST?" appears on the display.	LCD total illumination display 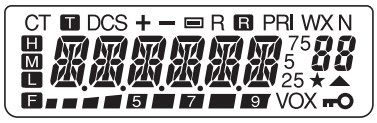					Initial configuration displayed after the full-reset. 	
2 VCO Lock voltage Check	After removing 3 screws fixing the TX-RX unit (B/3), remove the TX-RX (B/3) unit from the CN9 connector of the TX-RX unit (A/3). 1) Frequency: 136.000MHz	DVM	TX-RX (A/3)	LV			Check	0.7V or more
RX	2) Frequency: 173.990MHz							4.3V or less
TX	TX power: Low 1) Frequency: 136.000MHz PTT: ON							0.7V or more
	2) Frequency: 173.990MHz PTT: ON After observing the VCO lock voltage, connect the TX-RX unit (B/3) to the original position.							4.3V or less
3. TX frequency Adjust	1) TX power: Low Frequency: 145.990MHz PTT: ON	f. counter		ANT	TX-RX (A/3)	VR1	145.990MHz	±150Hz
4. Overvoltage warning reference voltage Adjust/Check	Switch to Adjustment mode and carry out the operations for adjustment item A. (Refer to page 28) 1) LCD display: DC Frequency: 145.050MHz (E, E3) Frequency: 146.050MHz (K, K2, M, M2) DC IN terminal voltage: 14.8V	DC power supply				[MENU]	Write	
	To exit from the Adjustment Mode, turn the transceiver power OFF and then ON. 2) Frequency: 145.050MHz (E, E3) Frequency: 146.050MHz (K, K2, M, M2) DC IN terminal voltage: 17.5V						Check	Alarm sound and display "DC ERR" message.

ManualsPlus.com

ADJUSTMENT

Receiver section

Item	Condition	Measurement			Adjustment			Specifications/ Remarks
		Test equipment	Unit	Terminal	Unit	Parts	Method	
1. RX BPF Adjust	Squelch level: 0 1) Frequency: 145.050MHz (E, E3) Frequency: 146.050MHz (K, K2, M, M2) SSG output: –53dBm (501 uV) SSG MOD: 1kHz SSG DEV: 3kHz	SSG Oscilloscope Distortion meter AF V.M Dummy load	TX-RX (A/3)	ANT SP		VOL knob	Turn the VOL knob to obtain 0.63V AF output.	0.63V
	Switch to Adjustment mode and carry out the operations for adjustment item E. (Refer to page 29) 2) LCD display: BPL Frequency: 136.050MHz SSG: –119dBm (0.25 uV)					Encoder [MENU]	Write	Max Sensitivity
	3) SSG: –113dBm (0.501 uV)						Check	12dB SINAD or more
	4) LCD display: BPC Frequency: 146.050MHz SSG: –119dBm (0.25 uV)					Encoder [MENU]	Write	Max Sensitivity
	5) SSG: –120dBm (0.22 uV)						Check	12dB SINAD or more
	6) LCD display: BPH Frequency: 160.050MHz SSG: –119dBm (0.25 uV)					Encoder [MENU]	Write	Max Sensitivity
	7) SSG: –113dBm (0.501uV)						Check	12dB SINAD or more
2. IF response Check	1) Frequency : 144.050MHz SSG Frequency: 221.750MHz SSG output: –60dBm (224uV) SSG MOD: 1kHz SSG DEV: 3kHz AF output: 0.63V/8Ω	SSG Oscilloscope Distortion meter					Check	12dB SINAD or less **Note:** If the specification is not satisfied, repeat the operations for "1. RX BPF Adjust".
3. Squelch / S-meter Write	Switch to Adjustment mode and carry out the operations for adjustment item C. (Refer to page 28) 1) LCD display: SQ1 Frequency: 145.050MHz (E, E3) Frequency: 146.050MHz (K, K2, M, M2) SSG: –125dBm (0.126uV)	SSG		ANT		[MENU]	Write	**Note:** In the Squelch adjust ments, all 4 adjusting points including the S-meter must be adjusted.
Squelch	2) LCD display: SQ2 Frequency: 145.050MHz (E, E3) Frequency: 146.050MHz (K, K2, M, M2) SSG: –120dBm (0.22uV)					[MENU]	Write	

ManualsPlus.com

ADJUSTMENT

Item	Condition	Measurement			Adjustment			Specifications/ Remarks
		Test equipment	Unit	Terminal	Unit	Parts	Method	
S-meter	Switch to Adjustment mode and carry out the operations for adjustment item D. (Refer to page 29) 3) LCD display: S1 Frequency: 145.050MHz (E, E3) Frequency: 146.050MHz (K, K2, M, M2) SSG: –120dBm (0.22uV)	SSG	TX-RX (A/3)	ANT		[MENU]	Write	
	4) LCD display: S9 Frequency: 145.050MHz (E, E3) Frequency: 146.050MHz (K, K2, M, M2) SSG: –105dBm (1.26uV)					[MENU]	Write	
4.Squelch Check	Squelch level: 1 1) Frequency: 145.050MHz (E, E3) Frequency: 146.050MHz (K, K2, M, M2) SSG output: –123dBm (0.158uV) SSG MOD: 1kHz SSG DEV: 3kHz	SSG Oscilloscope Distortion meter					Check	Open Squelch
	2) SSG: OFF							Close Squelch
5.S-meter Check	1) Frequency: 145.050MHz (E, E3) Frequency: 146.050MHz (K, K2, M, M2) SSG output: –120dBm (0.22uV)	SSG					Check	Two segments in S-meter light. ■■
	2) SSG output: –105dBm (1.26uV)							All segments in S-meter light. ■■■■■■■■■
6.Hum and noise ratio Check	1) Frequency: 145.050MHz (E, E3) Frequency: 146.050MHz (K, K2, M, M2) SSG output: –53dBm (501uV) SSG MOD: 1kHz SSG DEV: 3kHz AF Output: 0.63V/8Ω AF V.M = 0dB	SSG Oscilloscope Distortion meter AF V.M	TX-RX (A/3)	ANT SP				
	2) SSG DEV: OFF						Check	–38dB or less
7.AF distortion Check	1) Frequency: 145.050MHz (E, E3) Frequency: 146.050MHz (K, K2, M, M2) SSG output: –53dBm (501uV) SSG MOD: 1kHz SSG DEV: 3kHz AF Output: 0.63V/8Ω						Check	5% or less

ManualsPlus.com

ADJUSTMENT

Item	Condition	Measurement			Adjustment			Specifications/ Remarks
		Test equipment	Unit	Terminal	Unit	Parts	Method	
8. AF output Check	1) Frequency: 145.050MHz (E, E3) Frequency: 146.050MHz (K, K2, M, M2) SSG output: –53dBm (501uV) SSG MOD: 1kHz SSG DEV: 3kHz AF distortion: 10%	SSG Oscilloscope Distortion meter AF V.M	TX-RX (A/3)	ANT SP			Check	400mW or more
9. Current Drain Check	Squelch level: 5 1) Frequency: 145.050MHz (E, E3) Frequency: 146.050MHz (K, K2, M, M2) SSG output: OFF	SSG Am meter					Check	80mA or less
	2) Frequency: 145.050MHz (E, E3) Frequency: 146.050MHz (K, K2, M, M2) SSG output: –53dBm (501uV) SSG MOD: 1kHz SSG DEV: 3kHz VOL knob: Max							400mA or less

Transmitter section

Item	Condition	Measurement			Adjustment			Specifications/ Remarks
		Test equipment	Unit	Terminal	Unit	Parts	Method	
1. TX power Write (Battery terminal: 7.5V)	Battery terminal voltage: 7.5V **Note:** Adjust the output voltage from DC power supply until the voltage at the battery terminal becomes 7.5V while the transceiver is transmitting.	DC power supply DVM	TX-RX (A/3)	B GND				**Note:** Do not use the DC IN terminal.
High power	Switch to Adjustment mode and carry out the operations for adjustment item F. (Refer to page 29) 1)LCD display: P7L, H Frequency: 144.000MHz PTT: ON	Power meter Am meter		ANT		Encoder [MENU]	Write	4.8W ±0.05W 2.0A or less
	2)LCD display: P7C, H Frequency: 145.000MHz PTT: ON					Encoder [MENU]	Write	
	3) LCD display: P7H, H Frequency: 145.995MHz PTT: ON					Encoder [MENU]	Write	
Mid power	Switch to Adjustment mode and carry out the operations for adjustment item G. (Refer to page 30) 4)LCD display: P7L, M Frequency: 144.000MHz PTT: ON					Encoder [MENU]	Write	1.5W ±0.05W 1.4A or less
	5) LCD display: P7C, M Frequency: 145.000MHz PTT: ON					Encoder [MENU]	Write	

ManualsPlus.com

ADJUSTMENT

Item	Condition	Measurement			Adjustment			Specifications/ Remarks
		Test equipment	Unit	Terminal	Unit	Parts	Method	
Mid power	6) LCD display: P7H, M Frequency: 145.995MHz PTT: ON	Power meter Am meter	TX-RX (A/3)	ANT		Encoder [MENU]	Write	
Low power	Switch to Adjustment mode and carryout the operations for adjustment item H. (Refer to page 30) 7)LCD display: P7L, L Frequency: 144.000MHz PTT: ON					Encoder [MENU]	Write	0.5W ±0.05W 0.8A or less
	8)LCD display: P7C, L Frequency: 145.000MHz PTT: ON					Encoder [MENU]	Write	
	9)LCD display: P7H, L Frequency: 145.995MHz PTT: ON					Encoder [MENU]	Write	
2.TX power Write (DC IN terminal: 13.8V)	Connect the optional PG-2W DC cable to the power supply. DC IN terminal voltage: 13.8V	DC power supply DVM	TX-RX (A/3)	DC IN				
High power	Switch to Adjustment mode and carry out the operations for adjustment item I. (Refer to page 31) 1)LCD display: P13L, H Frequency: 144.000MHz PTT: ON	Power meter Am meter		ANT		Encoder [MENU]	Write	5.0W - 5.1W 2.0A or less
	2)LCD display: P13C, H Frequency: 145.000MHz PTT: ON					Encoder [MENU]	Write	
	3)LCD display: P13H, H Frequency: 145.995MHz PTT: ON					Encoder [MENU]	Write	
Mid power	Switch to Adjustment mode and carry out the operations for adjustment item J. (Refer to page 31) 4)LCD display: P13L, M Frequency: 144.000MHz PTT: ON					Encoder [MENU]	Write	1.5W ±0.05W 1.4A or less
	5)LCD display: P13C, M Frequency: 145.000MHz PTT: ON					Encoder [MENU]	Write	
	6)LCD display: P13H, M Frequency: 145.995MHz PTT: ON					Encoder [MENU]	Write	
Low power	Switch to Adjustment mode and carry out the operations for adjustment item K. (Refer to page 32) 7) LCD display: P13L, L Frequency: 144.000MHz PTT: ON					Encoder [MENU]	Write	0.5W ±0.05W 0.8A or less

ManualsPlus.com

ADJUSTMENT

Item	Condition	Measurement			Adjustment			Specifications/ Remarks
		Test equipment	Unit	Terminal	Unit	Parts	Method	
Low power	8) LCD display: P13C, L Frequency: 145.000MHz PTT: ON	Power meter Am meter	TX-RX (A/3)	ANT		Encoder [MENU]	Write	0.5W ±0.05W 0.8A or less
	9) LCD display: P13H, L Frequency: 145.995MHz PTT: ON					Encoder [MENU]	Write	
3. Battery terminal reference voltage Adjust/ Check	Switch to Adjustment mode and carry out the operations for adjustment item B. (Refer to page 28) TX power: Low 1)LCD display: BAT Frequency: 145.000MHz (E, E3) Frequency: 146.000MHz (K, K2, M, M2) PTT: ON Battery terminal voltage: 7.5V (Adjust the output voltage from DC power supply until the voltage at the battery terminal becomes 7.5V while the transceiver is transmitting.)	DC power supply DVM				[MENU] LCD	Write Check	All segments are lighted. ■■■■■■■■■
	To exit from the Adjustment Mode, turn the transceiver power OFF and then ON. 2)Frequency: 145.000MHz (E, E3) Frequency: 146.000MHz (K, K2, M, M2) PTT: ON Battery terminal voltage: 6.4V (Adjust the output voltage from DC power supply until the voltage at the battery terminal becomes 6.4V while the transceiver is transmitting.)					LCD	Check	4 to 6 segments are lighted. ■■■■ ~ ■■■■■■
4. DCS modulation balance	Switch to Adjustment mode and carry out the operations for adjustment item L. (Refer to page 32) Detector: +P, –P HPF: OFF LPF: 3kHz De-emphasis: OFF TX power: Low 1)LCD display: DCS.BAL Frequency: 145.000MHz (E, E3) Frequency: 146.000MHz (K, K2, M, M2) PTT: ON	Linear detector Oscilloscope	TX-RX (A/3)	ANT		VR6	By tuning the VR6, adjust the modulation wave until if becomes the square wave.	
5. MAX DEV	To exit from the Adjustment Mode, turn the transceiver power OFF and then ON. MIC terminal input AG: 1kHz/80mV Detector: +P, –P HPF: OFF LPF: 15kHz De-emphasis: OFF TX power: Low	Linear detector AG Oscilloscope		ANT MIC		VR5	4.2kHz According to the larger +, –.	±0.1kHz

ManualsPlus.com

ADJUSTMENT

Item	Condition	Measurement			Adjustment			Specifications/ Remarks
		Test equipment	Unit	Terminal	Unit	Parts	Method	
	1)Frequency: 145.000MHz (E, E3) Frequency: 146.000MHz (K, K2, M, M2) PTT: O N	Linear detector AG Oscilloscope	TX-RX (A/3)	ANT MIC		VR5	4.2kHz According to the larger +, –.	±0.1kHz
6. MIC sensitivity Check	MIC terminal input AG: 1kHz Detector: P-P/2 HPF: OFF LPF: 15kHz De-emphasis: OFF TX power: Low 1)Frequency: 145.000MHz (E, E3) Frequency: 146.000MHz (K, K2, M, M2) PTT: ON						Change the AG output level to obtain 3kHz deviation.	4mV - 12mV
7. Tone deviation	Switch to Adjustment mode and carry out the operations for adjustment item M. (Refer to page 33) Detector: P-P/2 HPF: OFF LPF: 3kHz De-emphasis: OFF TX power: Low 1)LCD display: DVL, T Frequency: 144.000MHz PTT: ON	Linear detector		ANT		Encoder [MENU]	Write	0.8kHz ±50Hz
	2)LCD display: DVC, T Frequency: 145.000MHz PTT: ON					Encoder [MENU]	Write	
	3)LCD display: DVH, T Frequency: 145.990MHz PTT: ON					Encoder [MENU]	Write	
8. DCS deviation	Switch to Adjustment mode and carry out the operations for adjustment item N. (Refer to page 33) Detector: +P HOLD HPF: OFF LPF: 3kHz De-emphasis: OFF TX power: Low 1)LCD display: DVL, DCS Frequency: 144.000MHz PTT: ON					Encoder [MENU]	Write	0.8kHz ±50Hz
	2)LCD display: DVC, DCS Frequency: 145.000MHz PTT: ON					Encoder [MENU]	Write	
	3)LCD display: DVH, DCS Frequency: 145.990MHz PTT: ON					Encoder [MENU]	Write	

ManualsPlus.com

ADJUSTMENT

Item	Condition	Measurement			Adjustment			Specifications/ Remarks
		Test equipment	Unit	Terminal	Unit	Parts	Method	
9. VOX Sensitivity Write	Switch to Adjustment mode and carry out the operations for adjustment item O. (Refer to page 34) TX power: Low 1)LCD display: VOX1 Frequency: 145.000MHz (E, E3) Frequency: 146.000MHz (K, K2, M, M2) AG: 1kHz/80mV	AG	TX-RX (A/3)	MIC		[MENU]	Write	
	2)LCD display: VOX9 Frequency: 145.000MHz (E, E3) Frequency: 146.000MHz (K, K2, M, M2) AG: 1kHz/1.5mV					[MENU]	Write	
10. VOX Operation Check	To exit from the Adjustment Mode, turn the transceiver power OFF and then ON. 1)Frequency: 145.000MHz (E, E3) Frequency: 146.000MHz (K, K2, M, M2) VOX Gain: 4 AG: OFF						Check	Does not transmit.
	2)AG: 1kHz/100mV							Transmits.
11. DTMF DEV Check	Detector: P-P/2 HPF: OFF LPF: 15kHz De-emphasis: OFF TX power: Low 1)Frequency: 145.000MHz (E, E3) Frequency: 146.000MHz (K, K2, M, M2) Send DTMF code "D" **Note:** For details of sending DTMF code "D", refer to the "Single Tone Mode" on page 27.	Linear detector		ANT			Check	2.0kHz - 4.2kHz
12. 1750Hz Tone DEV Check (E, E3 types only)	Detector: P-P/2 HPF: OFF LPF: 15kHz De-emphasis: OFF TX power: Low 1)Frequency: 145.000MHz (E, E3) Send 1750Hz Tone						Check	2.5kHz - 4.5kHz
13. Protection Check (DC IN terminal: 13.8V)	TX power: High 1)Frequency: 145.000MHz (E, E3) Frequency: 146.000MHz (K, K2, M, M2) ANT: OPEN PTT: ON	Am meter					Check	2.4A or less

ManualsPlus.com

ADJUSTMENT / TERMINAL FUNCTION

Adjustment points
TX-RX unit (A/3)
Component side view

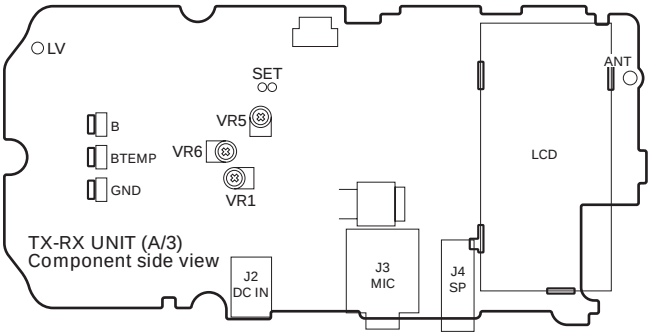

VR1 : TX frequency
VR5 : MAX DEV
VR6 : DCS modulation valance
LV : VCO lock voltage terminal

Downloaded by
RadioAmateur.EU

TERMINAL FUNCTION

CN No.	Pin No.	Pin Name	Function
TX-RX UNIT (A/3) : TX-RX↔VOL/ENC			
CN1	1	GND	GND
	2	Vol-OUT	RX audio volume output
	3	Vol-IN	RX audio volume input
	4	EN2	Encoder 2
	5	GND	GND
	6	EN1	Encoder 1
TX-RX UNIT (A/3) : TX-RX↔Internal speaker			
CN2	1	SPK	Internal speaker audio
	2	SPG	Audio ground
TX-RX UNIT (A/3) : TX-RX↔TX-RX UNIT (B/3) : 10KEY			
CN6, CN7	1	PTT	PTT
	2	KIN4	Key matrix input
	3	KYO2	Key matrix output (MONI key)
	4	KYO1	Key matrix output (LAMP key)
	5	BL	LCD backlight control
	6	GND	GND
TX-RX UNIT (A/3) : TX-RX↔TX-RX UNIT (C/3) : PTT			
CN8, CN9	1	KIN1	Key matrix input
	2	IM	Internal microphone
	3	KYO3	Key matrix output
	4	8M	8V power supply
	5	KIN4	Key matrix input
	6	MIG	Microphone ground
	7	LAMP	Key illumination control
	8	GND	GND
	9	KYO0	Key matrix output
	10	KIN2	Key matrix input
	11	KYO1	Key matrix output
	12	KIN0	Key matrix input
	13	KYO2	Key matrix output
	14	KIN3	Key matrix input

TH-K2AT/K2E/K2ET PC BOARD

ManualsPlus.com

TX-RX UNIT (X57-674X-XX) (A/3) Component side view (J72-0883-09 A/3)
0-11 : K,K2 0-21 : M,M2 2-71 : E 2-72 : E3

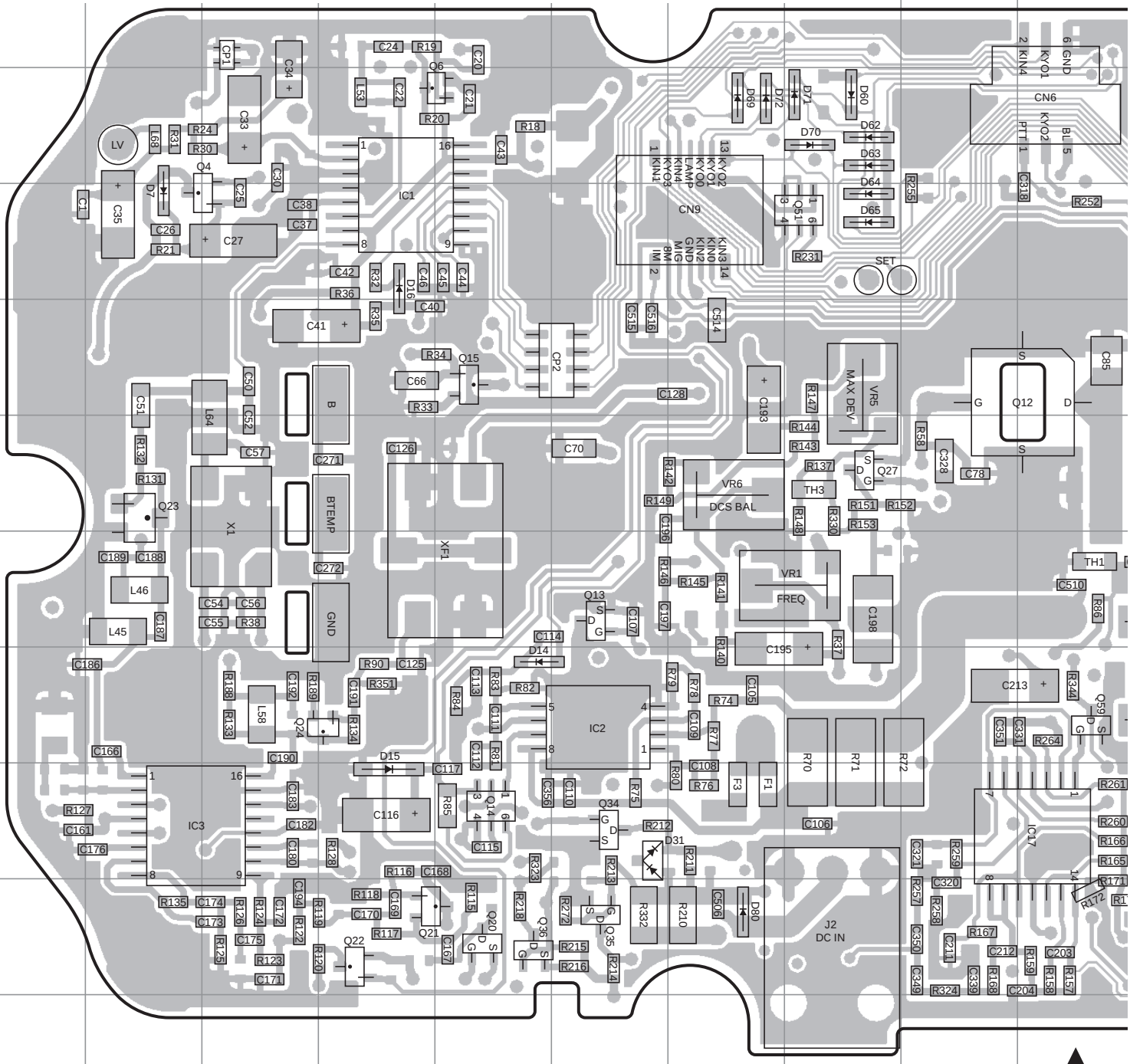

Ref. No.	Address	Ref. No.	Address	Ref. No.	Address	Ref. No.	Address	Ref. No.	Address	Ref. No.	Address	Ref. No.	Address
IC1	4D	IC17	9J	Q21	10D	Q36	10E	Q56	7L	D26	7L	D64	4H
IC2	8F	Q4	4C	Q22	10D	Q37	8L	Q57	8Q	D31	9F	D65	4H
IC3	9B	Q6	3E	Q23	6B	Q38	7K	Q59	8J	D34	7L	D69	3G
IC6	6M	Q12	5J	Q24	8D	Q41	9Q	D7	4B	D40	7S	D70	3H
IC9	9P	Q13	7F	Q27	6H	Q47	7S	D14	8E	D41	7S	D71	3H
IC10	6P	Q14	9E	Q31	6L	Q51	4H	D15	9D	D60	3H	D72	3G
IC11	6Q	Q15	5E	Q34	9F	Q53	9Q	D16	4D	D62	3H	D80	10G
IC15	7P	Q20	10E	Q35	10F	Q55	5P	D25	6K	D63	3H		

ManualsPlus.com

TX-RX UNIT (X57-674X-XX) (A/3) Component side view (J72-0883-09 A/3)

0-11 : K,K2 0-21 : M,M2 2-71 : E 2-72 : E3

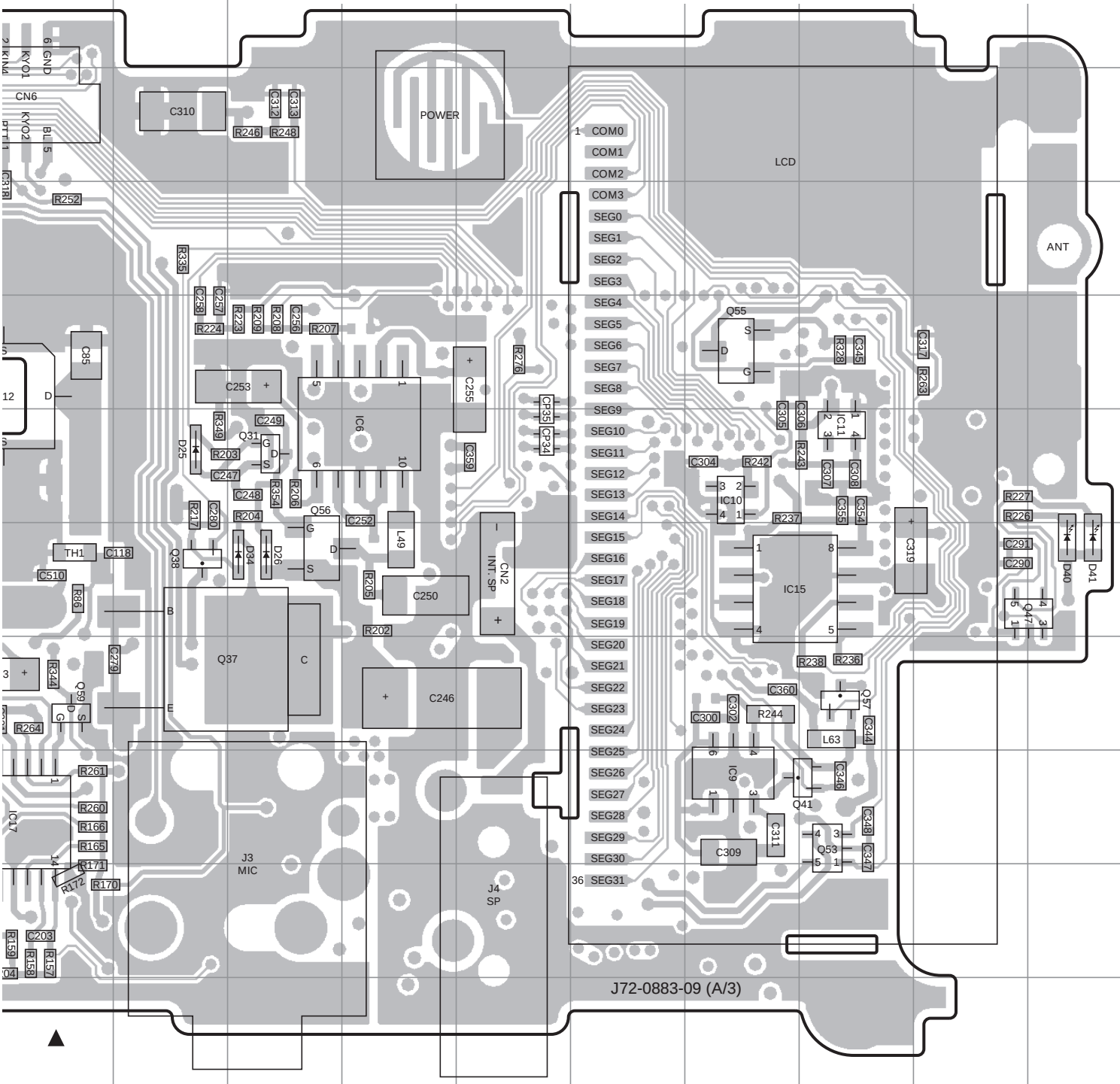

	Component side
Layer 1	
Layer 2	
Layer 3	
Layer 4	
	Foil side

Downloaded by RadioAmateur.EU

TH-K2AT/K2E/K2ET PC BOARD

ManualsPlus.com

TX-RX UNIT (X57-674X-XX) (A/3) Foil side view (J72-0883-09 A/3)
0-11 : K,K2 0-21 : M,M2 2-71 : E 2-72 : E3

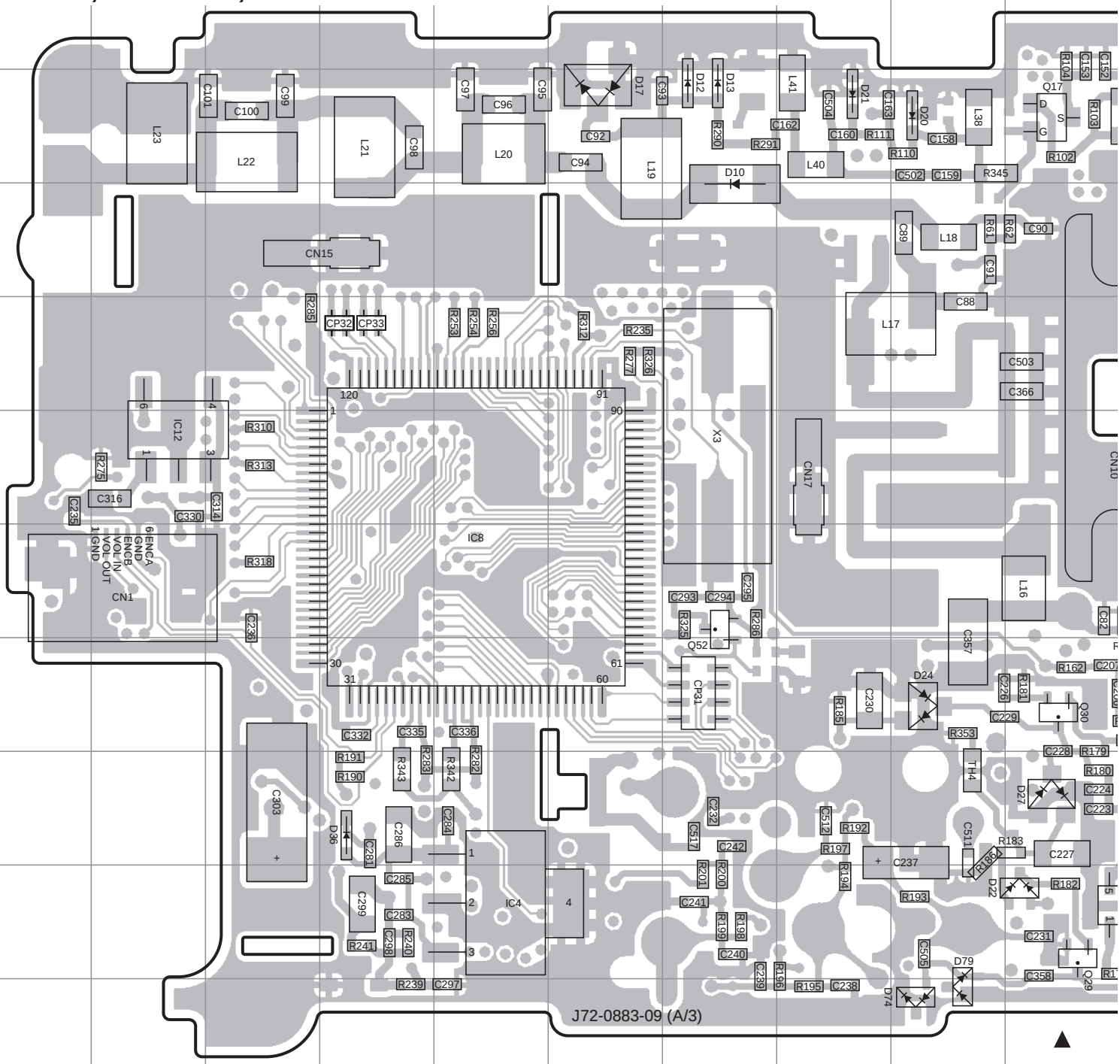

Ref. No.	Address	Ref. No.	Address	Ref. No.	Address	Ref. No.	Address	Ref. No.	Address	Ref. No.	Address
IC4	10E	Q5	3N	Q33	9N	D9	3M	D21	3H	D36	9D
IC5	10K	Q9	4N	Q52	7G	D10	3G	D22	10J	D73	7N
IC8	7E	Q10	5N	Q58	6L	D12	3G	D24	8I	D74	11I
IC12	6B	Q11	6M	D1	3R	D13	3G	D27	9J	D79	11I
IC16	8L	Q16	4L	D2	3R	D17	3F	D30	8N		
Q1	4P	Q17	3J	D5	2Q	D18	2L	D32	8M		
Q2	3O	Q29	10J	D6	3Q	D19	2K	D33	8N		
Q3	3P	Q30	8J	D8	4M	D20	3I	D35	7N		

ManualsPlus.com

TX-RX UNIT (X57-674X-XX) (A/3) Foil side view (J72-0883-09 A/3)
0-11 : K,K2 0-21 : M,M2 2-71 : E 2-72 : E3

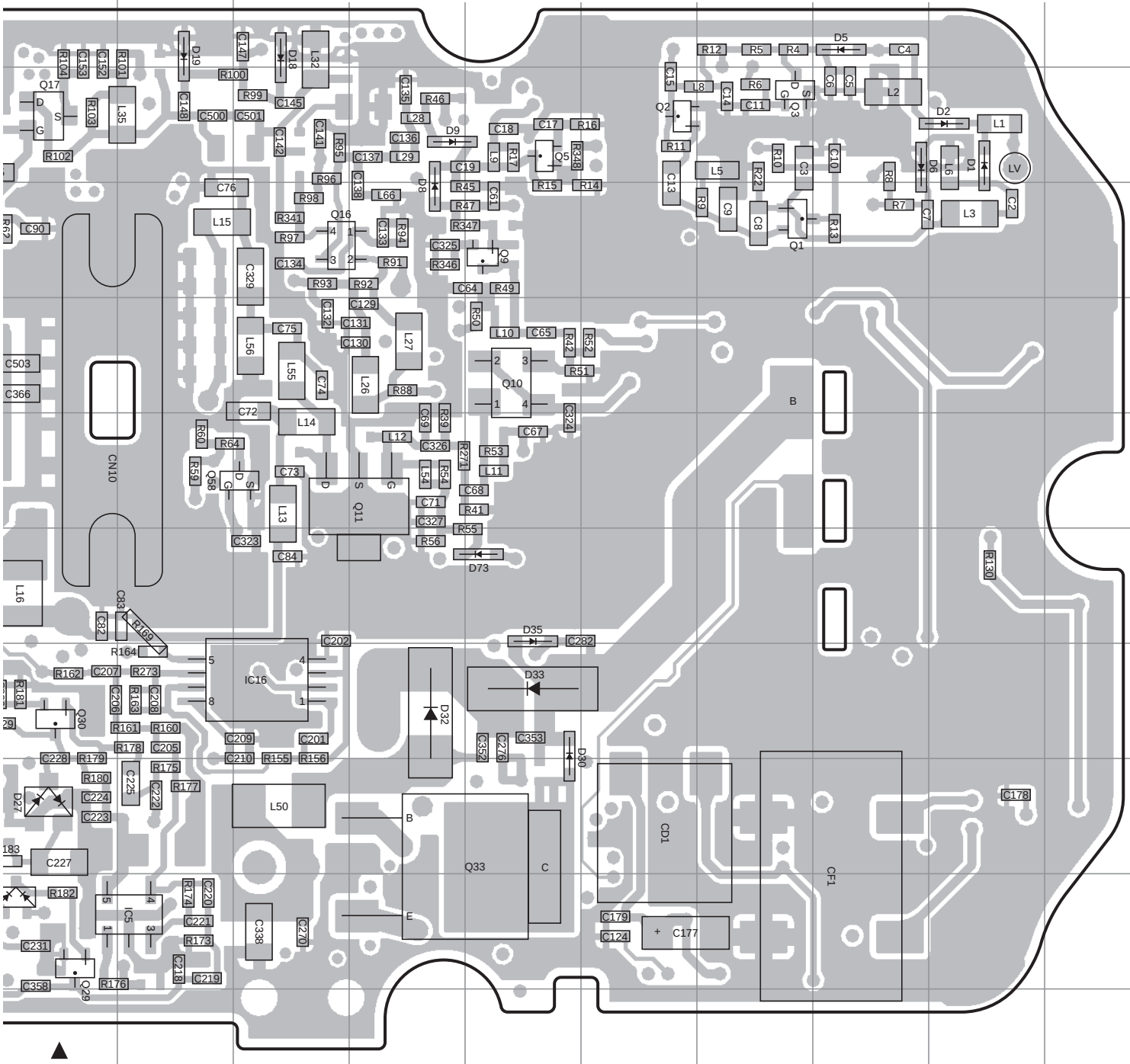

Component side
Layer 1
Layer 2
Layer 3
Layer 4
Foil side

ManualsPlus.com

TH-K2AT/K2E/K2ET PC BOARD

TX-RX UNIT (X57-674X-XX) (A/3) Component side view (J72-0883-09 A/3)

0-11 : K,K2 0-21 : M,M2 2-71 : E 2-72 : E3

PC BOARD TH-K2AT/K2E/K2ET

TX-RX UNIT (X57-674X-XX) (A/3) Component side view (J72-0883-09 A/3)

0-11 : K,K2 0-21 : M,M2 2-71 : E 2-72 : E3

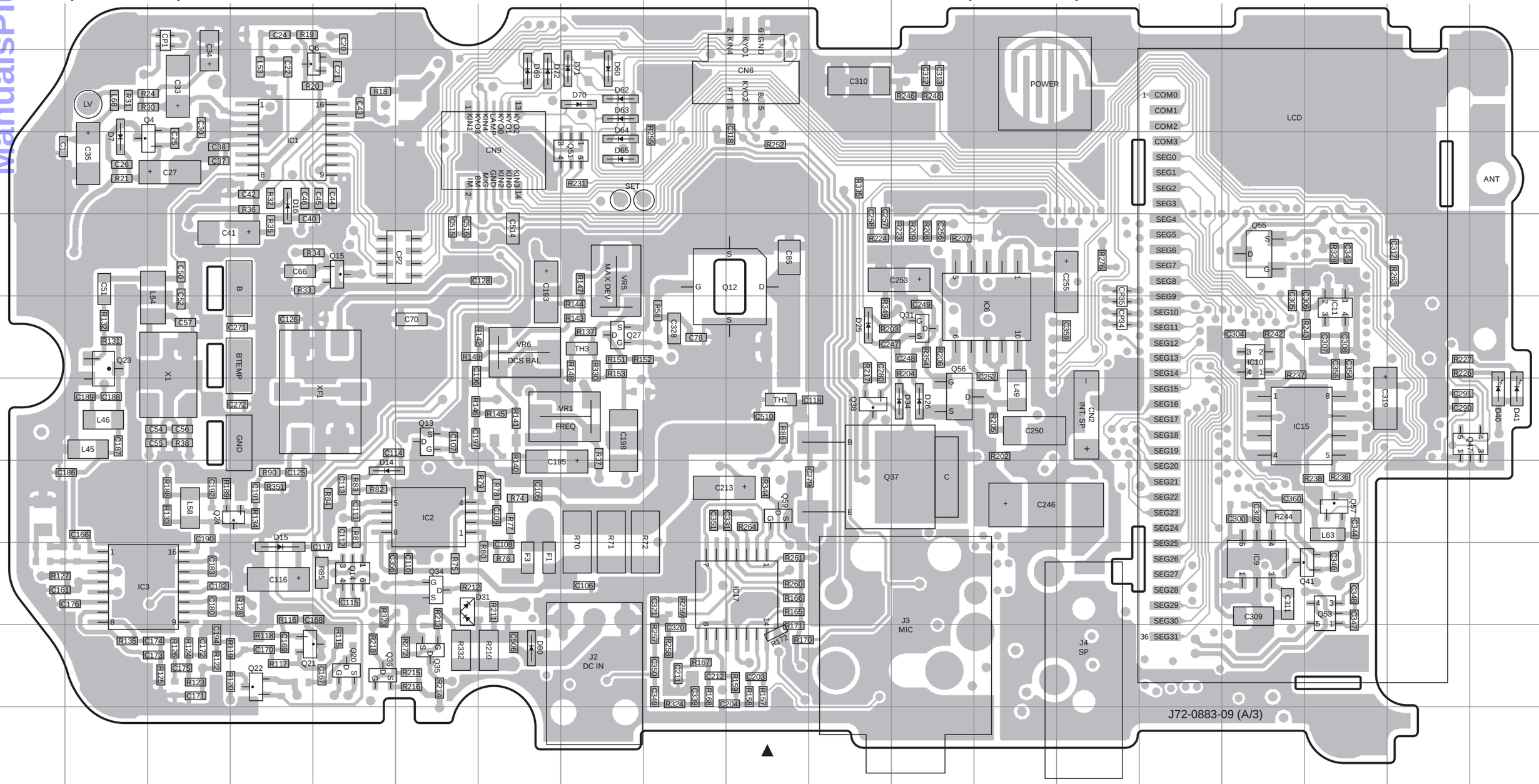

Ref. No.	Address	Ref. No.	Address	Ref. No.	Address	Ref. No.	Address	Ref. No.	Address	Ref. No.	Address	Ref. No.	Address
IC1	4D	IC17	9J	Q21	10D	Q36	10E	Q56	7L	D26	7L	D64	4H
IC2	8F	Q4	4C	Q22	10D	Q37	8L	Q57	8Q	D31	9F	D65	4H
IC3	9B	Q6	3E	Q23	6B	Q38	7K	Q59	8J	D34	7L	D69	3G
IC6	6M	Q12	5J	Q24	8D	Q41	9Q	D7	4B	D40	7S	D70	3H
IC9	9P	Q13	7F	Q27	6H	Q47	7S	D14	8E	D41	7S	D71	3H
IC10	6P	Q14	9E	Q31	6L	Q51	4H	D15	9D	D60	3H	D72	3G
IC11	6Q	Q15	5E	Q34	9F	Q53	9Q	D16	4D	D62	3H	D80	10G
IC15	7P	Q20	10E	Q35	10F	Q55	5P	D25	6K	D63	3H		

Component side
Layer 1
Layer 2
Layer 3
Layer 4
Foil side

Downloaded by RadioAmateur.EU

ManualsPlus.com

TH-K2AT/K2E/K2ET PC BOARD

PC BOARD TH-K2AT/K2E/K2ET

TX-RX UNIT (X57-674X-XX) (A/3) Foil side view (J72-0883-09 A/3)
0-11 : K,K2 0-21 : M,M2 2-71 : E 2-72 : E3

TX-RX UNIT (X57-674X-XX) (A/3) Foil side view (J72-0883-09 A/3)
0-11 : K,K2 0-21 : M,M2 2-71 : E 2-72 : E3

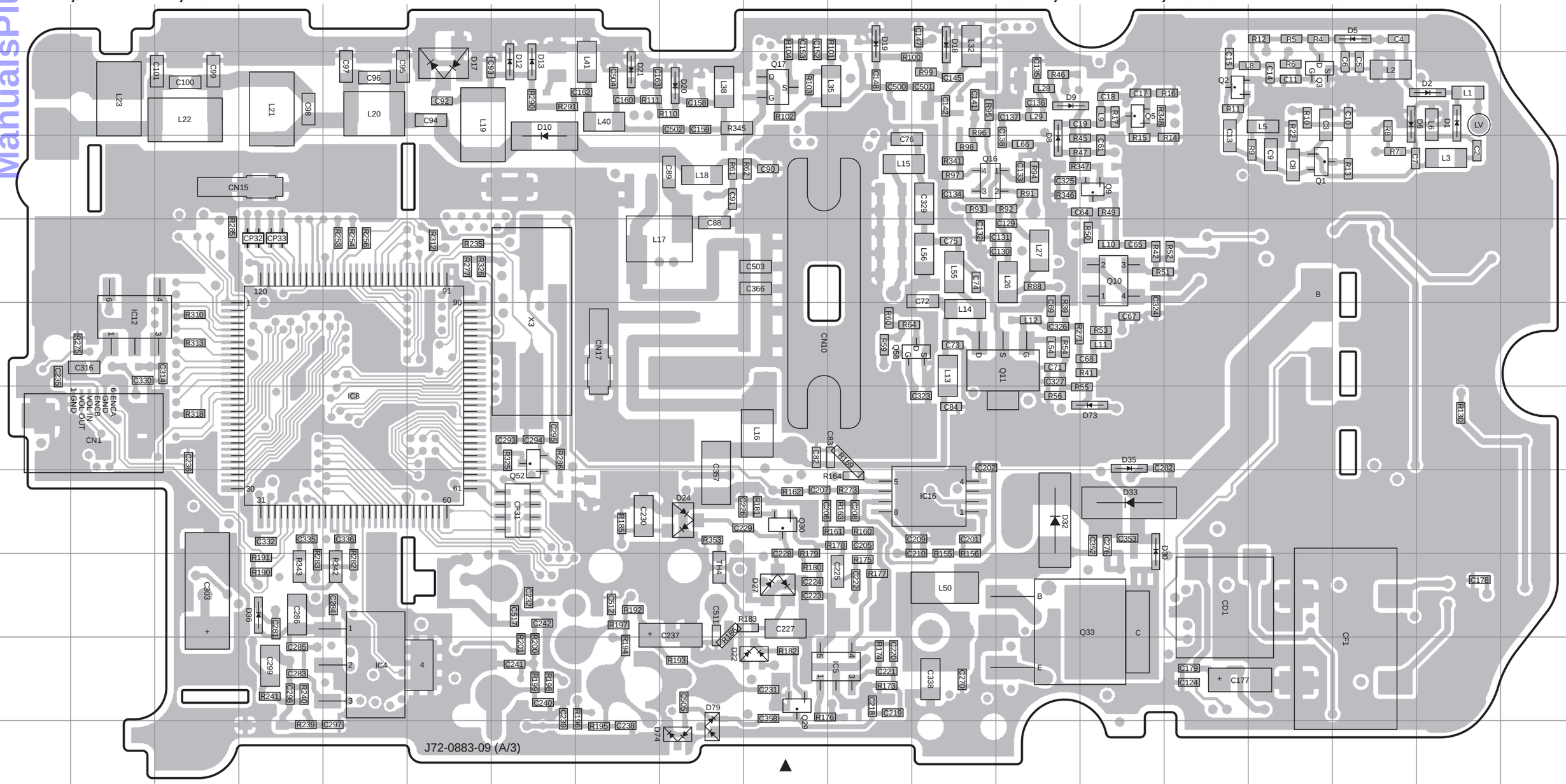

Ref. No.	Address	Ref. No.	Address	Ref. No.	Address	Ref. No.	Address	Ref. No.	Address	Ref. No.	Address
IC4	10E	Q5	3N	Q33	9N	D9	3M	D21	3H	D36	9D
IC5	10K	Q9	4N	Q52	7G	D10	3G	D22	10J	D73	7N
IC8	7E	Q10	5N	Q58	6L	D12	3G	D24	8I	D74	11I
IC12	6B	Q11	6M	D1	3R	D13	3G	D27	9J	D79	11I
IC16	8L	Q16	4L	D2	3R	D17	3F	D30	8N		
Q1	4P	Q17	3J	D5	2Q	D18	2L	D32	8M		
Q2	3O	Q29	10J	D6	3Q	D19	2K	D33	8N		
Q3	3P	Q30	8J	D8	4M	D20	3I	D35	7N		

Component side
Layer 1
Layer 2
Layer 3
Layer 4
Foil side

TH-K2AT/K2E/K2ET PC BOARD

ManualsPlus.com

TX-RX UNIT (X57-674X-XX) (B,C/3) Component side view (J72-0883-09 B,C/3)
0-11 : K,K2 0-21 : M,M2 2-71 : E 2-72 : E3

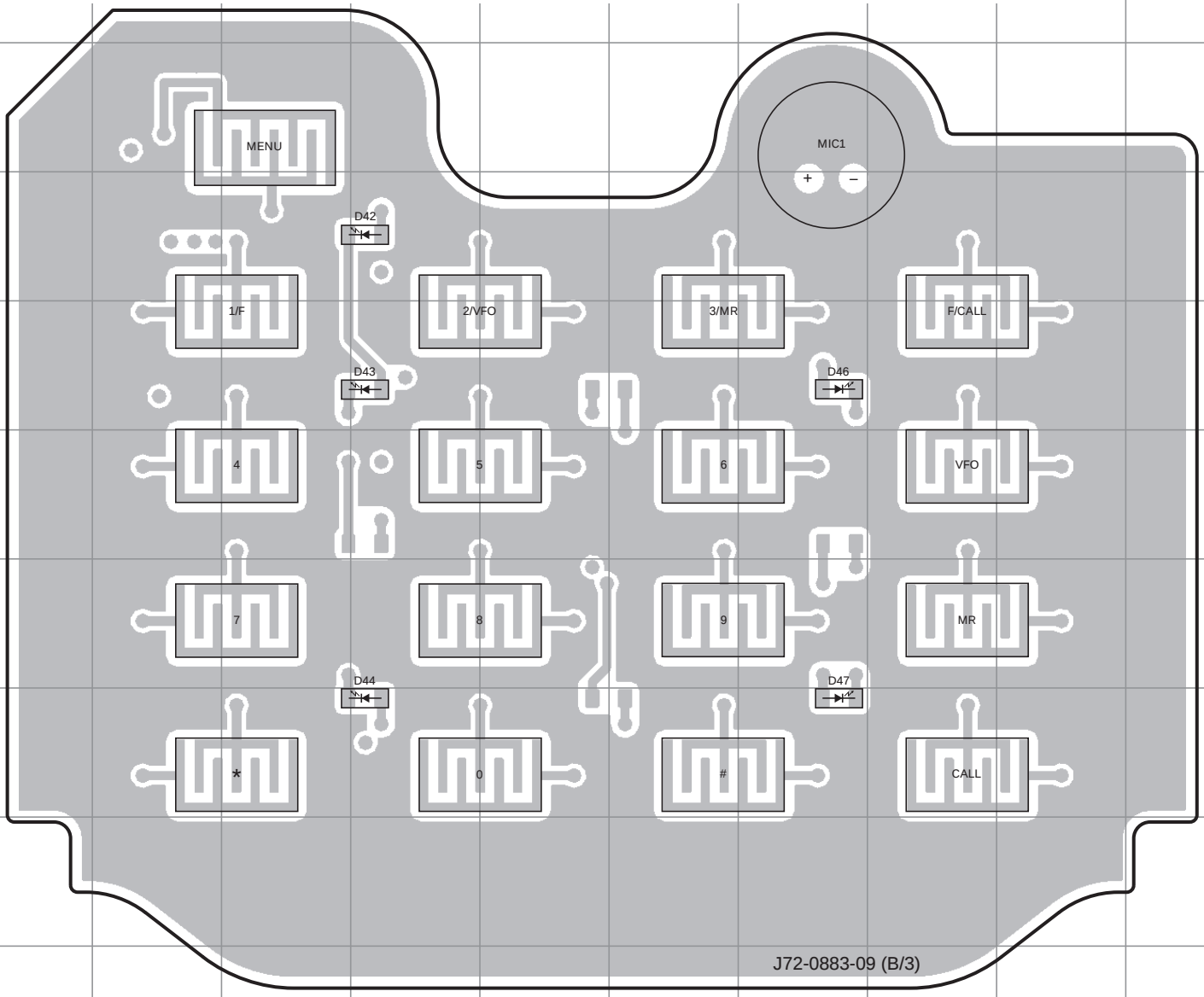

J72-0883-09 (B/3)

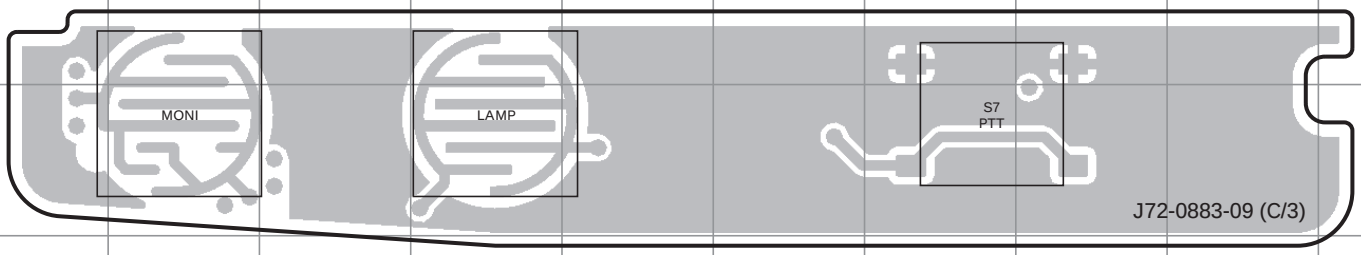

J72-0883-09 (C/3)

Ref. No.	Address
D42	4D
D43	5D
D44	8D
D46	5G
D47	8G

Component side
Layer 1
Layer 2
Layer 3
Layer 4
Foil side

ManualsPlus.com

TX-RX UNIT (X57-674X-XX) (B,C/3) Foil side view (J72-0883-09 B,C/3)
0-11 : K,K2 0-21 : M,M2 2-71 : E 2-72 : E3

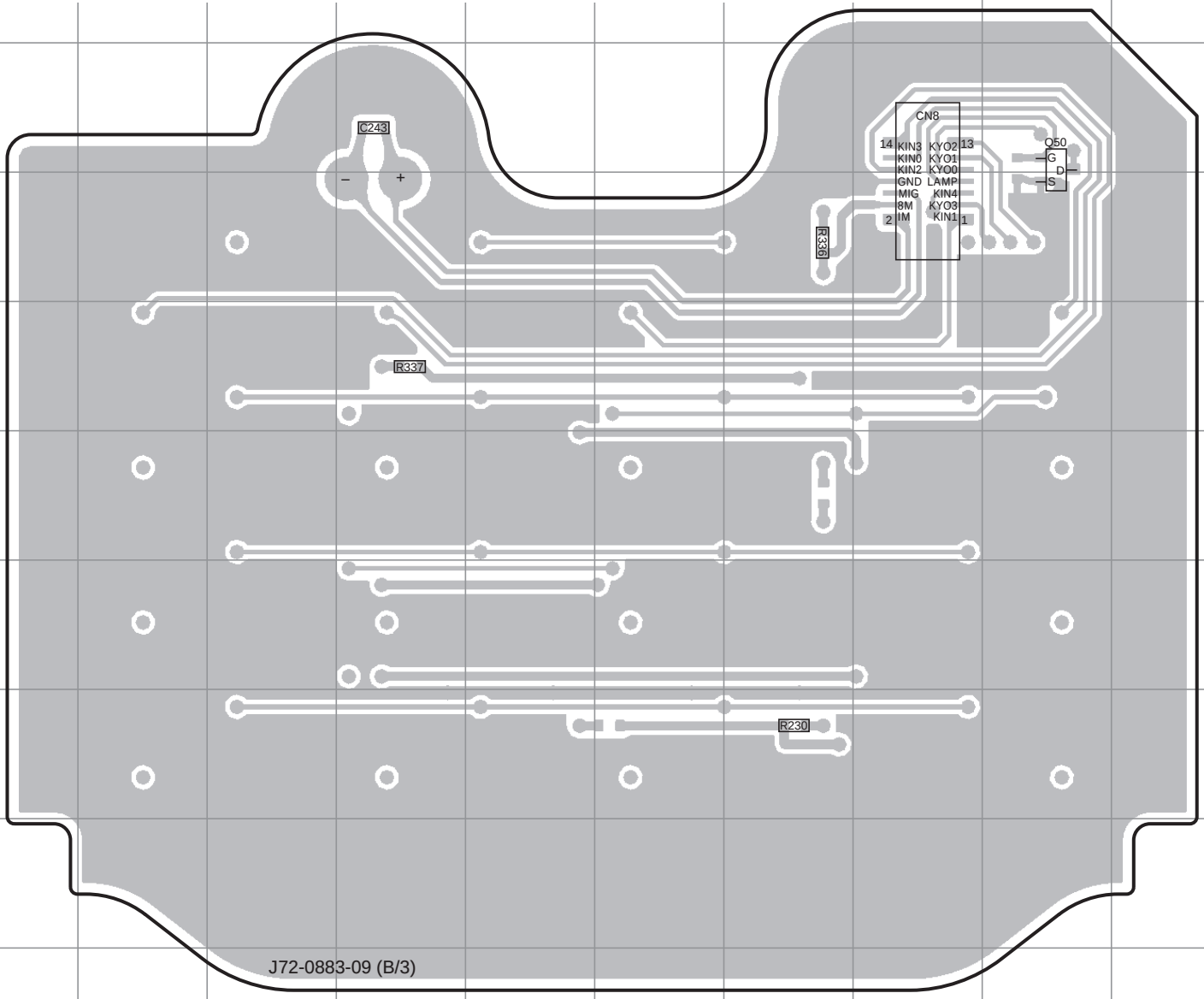

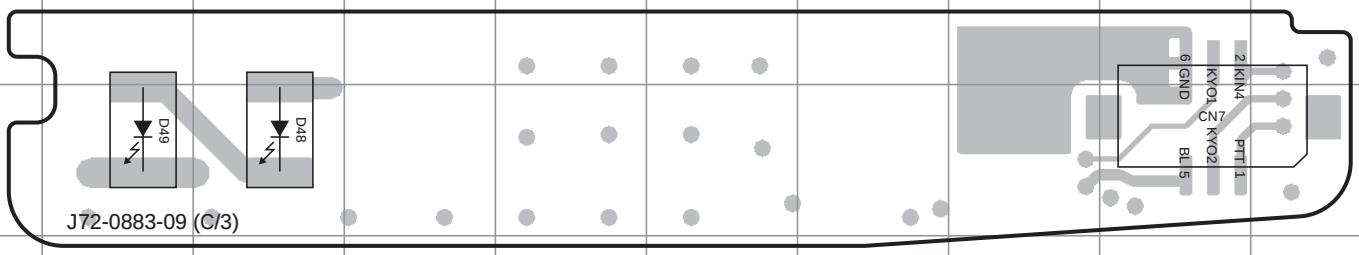

Ref. No.	Address
Q50	3I
D48	11C
D49	11B

Component side

Layer 1	
Layer 2	
Layer 3	
Layer 4	

Foil side

ManualsPlus.com

TH-K2AT/K2E/K2ET SCHEMATIC DIAGRAM

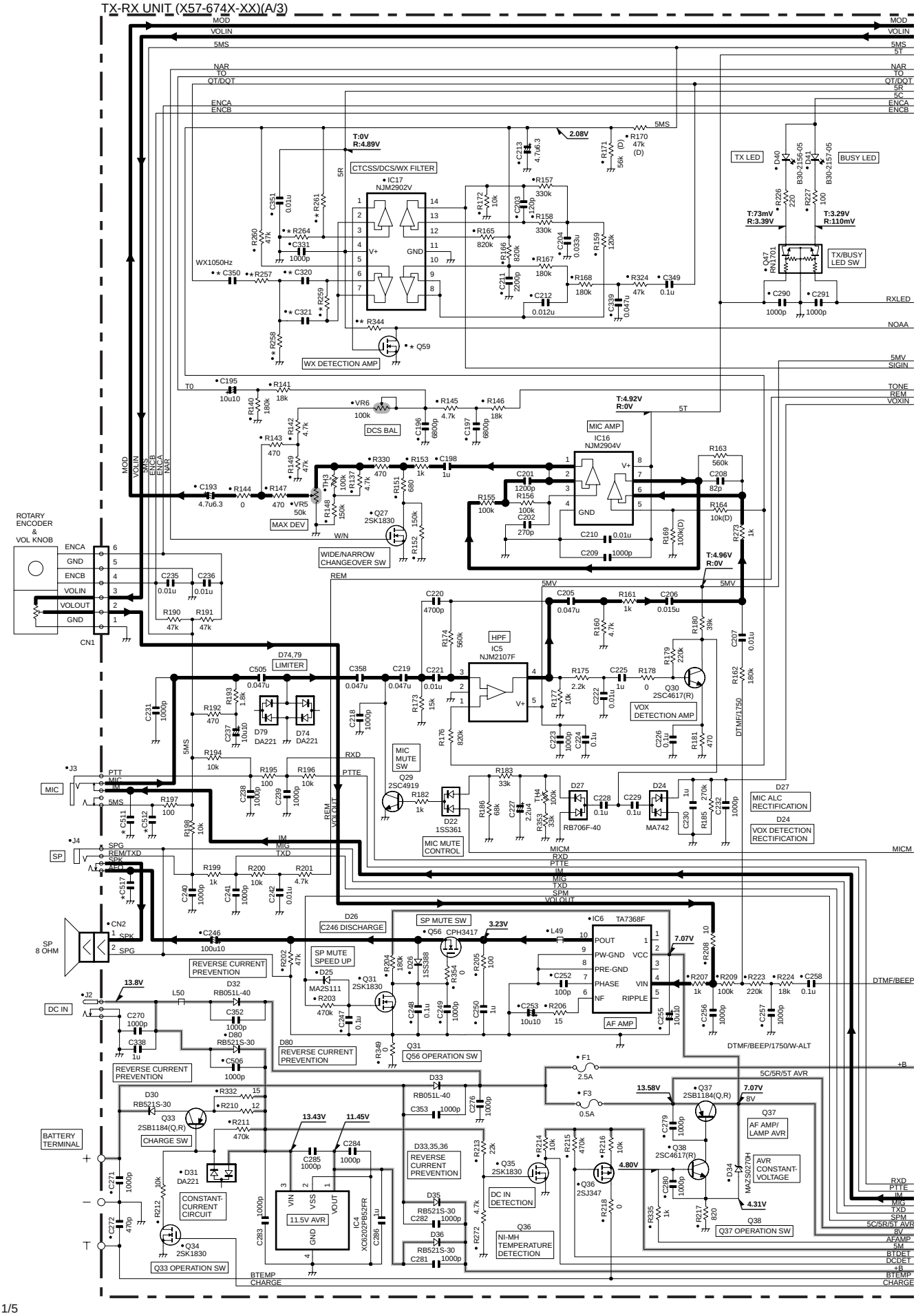

ManualsPlus.com

SCHEMATIC DIAGRAM TH-K2AT/K2E/K2ET

TX-RX UNIT (X57-674X-XX)(A/3)

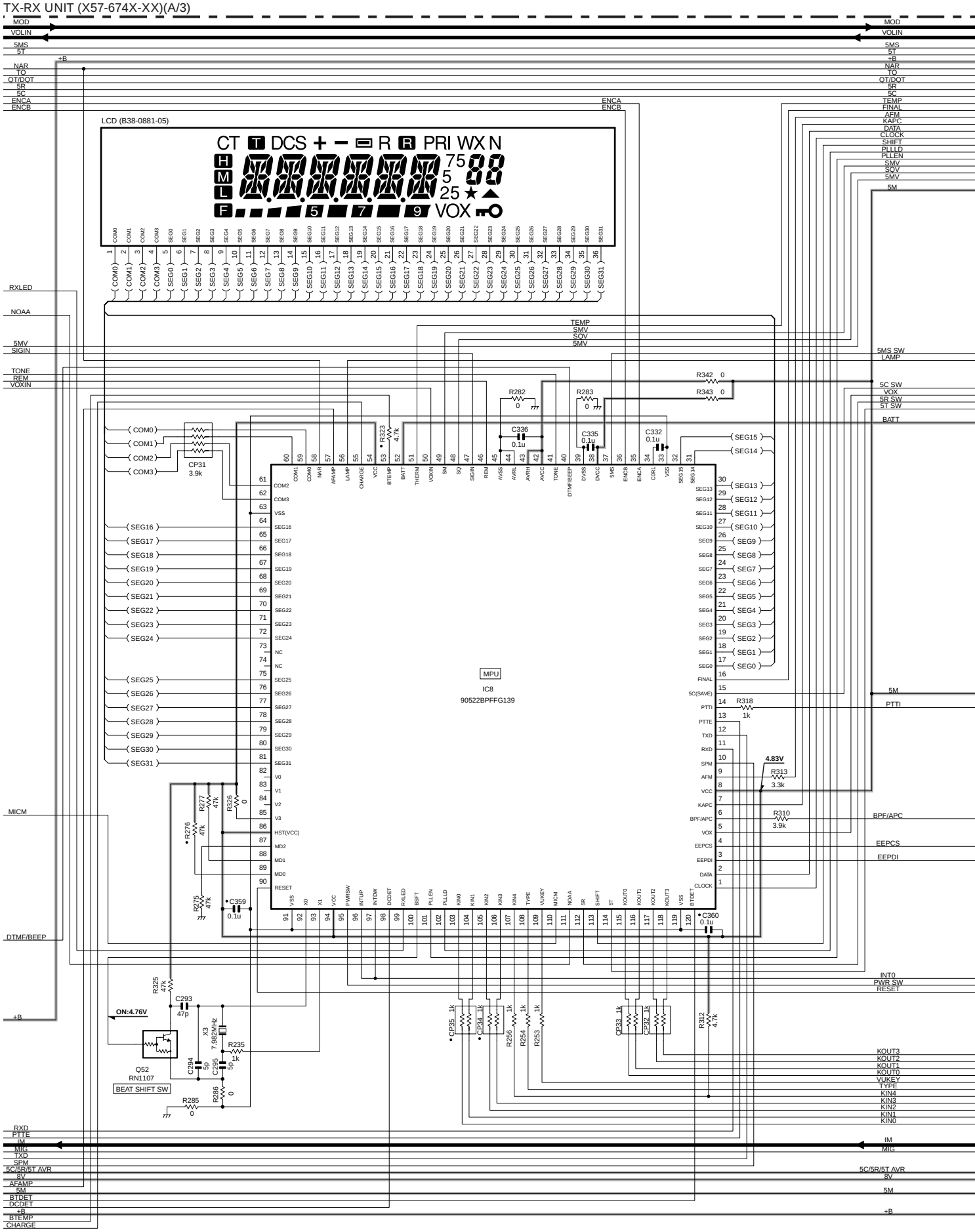

ManualsPlus.com

TH-K2AT/K2E/K2ET SCHEMATIC DIAGRAM

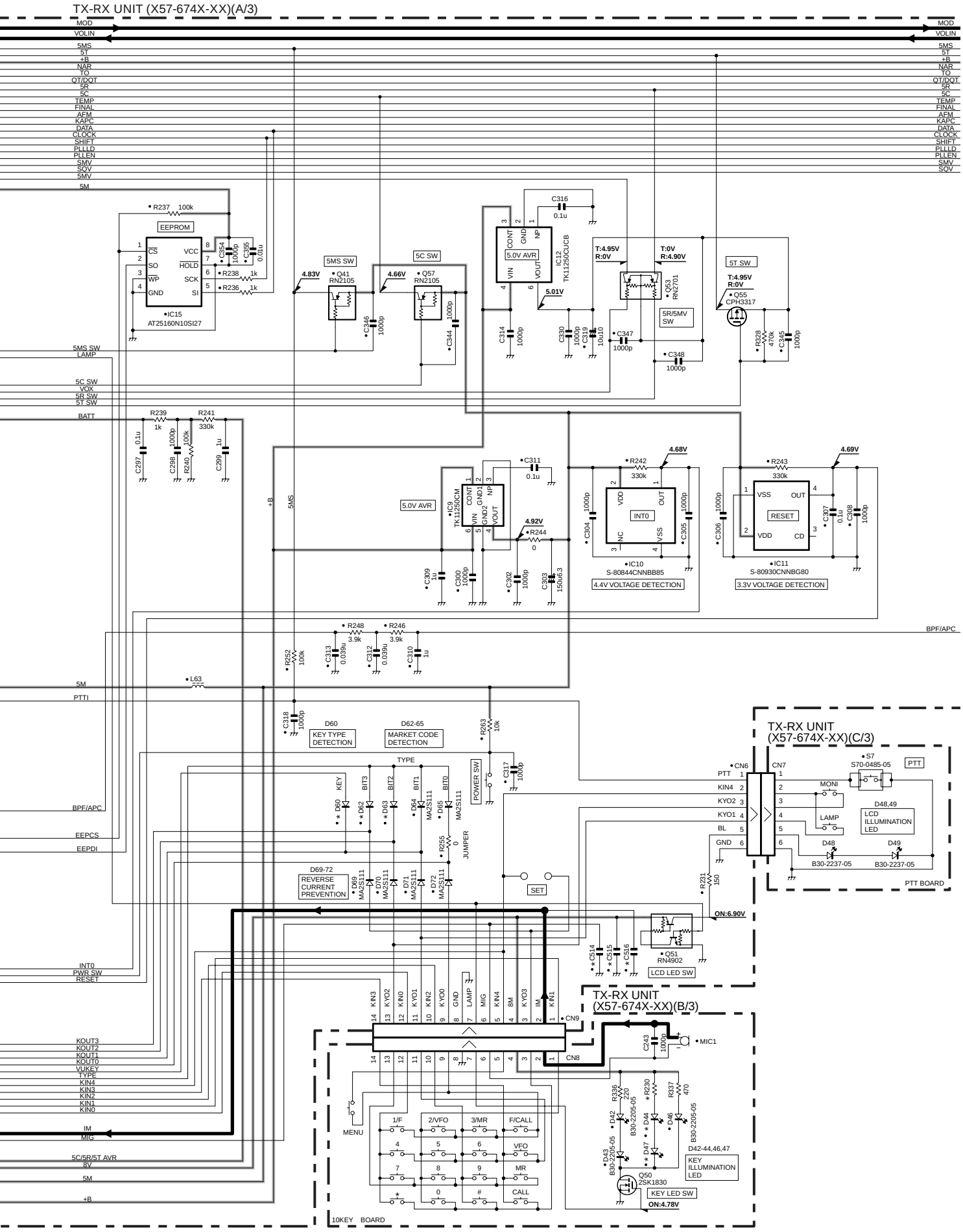

ManualsPlus.com

SCHEMATIC DIAGRAM TH-K2AT/K2E/K2ET

TX-RX UNIT (X57-674X-XX)(A/3)

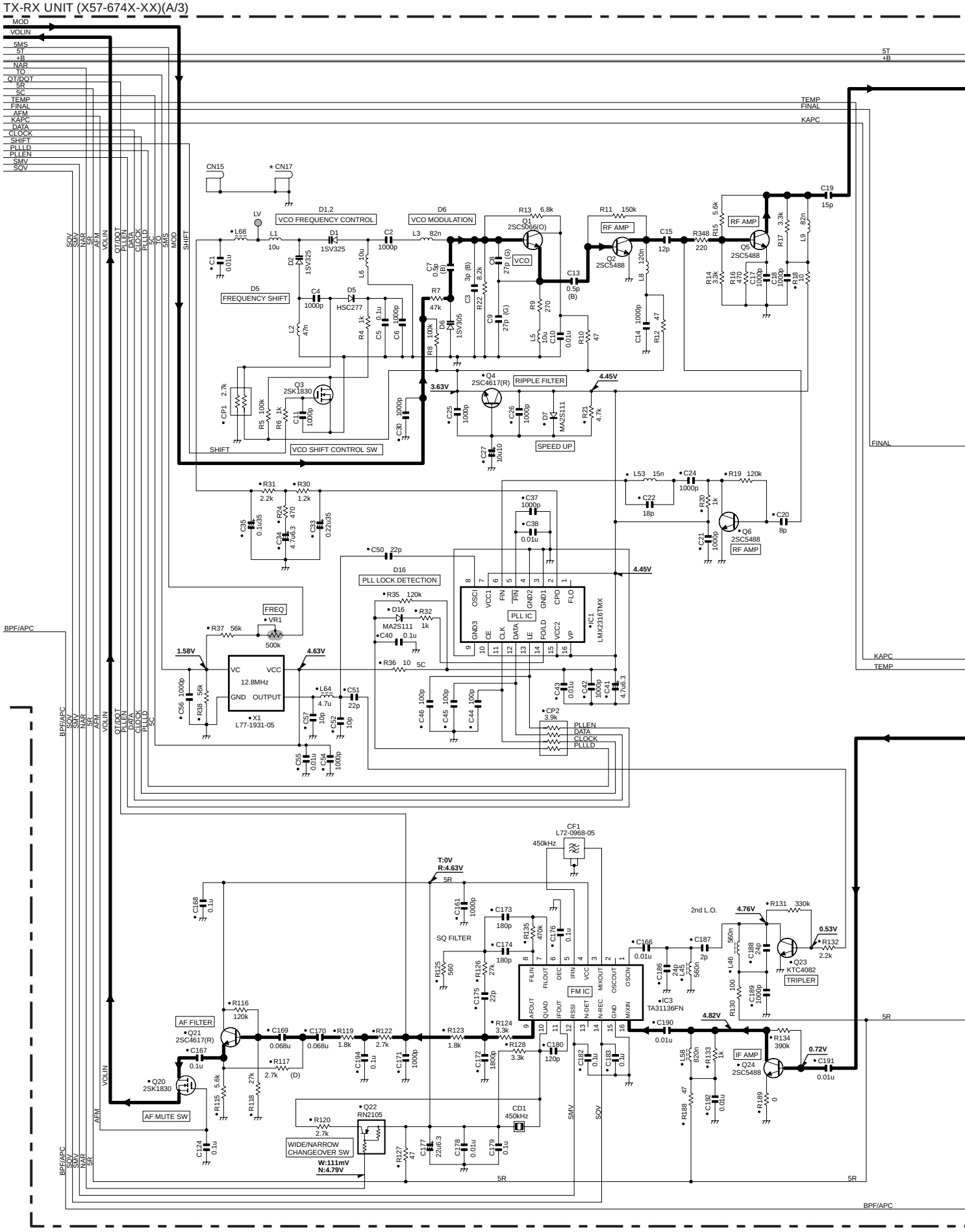

ManualsPlus.com

TH-K2AT/K2E/K2ET SCHEMATIC DIAGRAM

TX-RX UNIT (X57-674X-XX)(A/3)

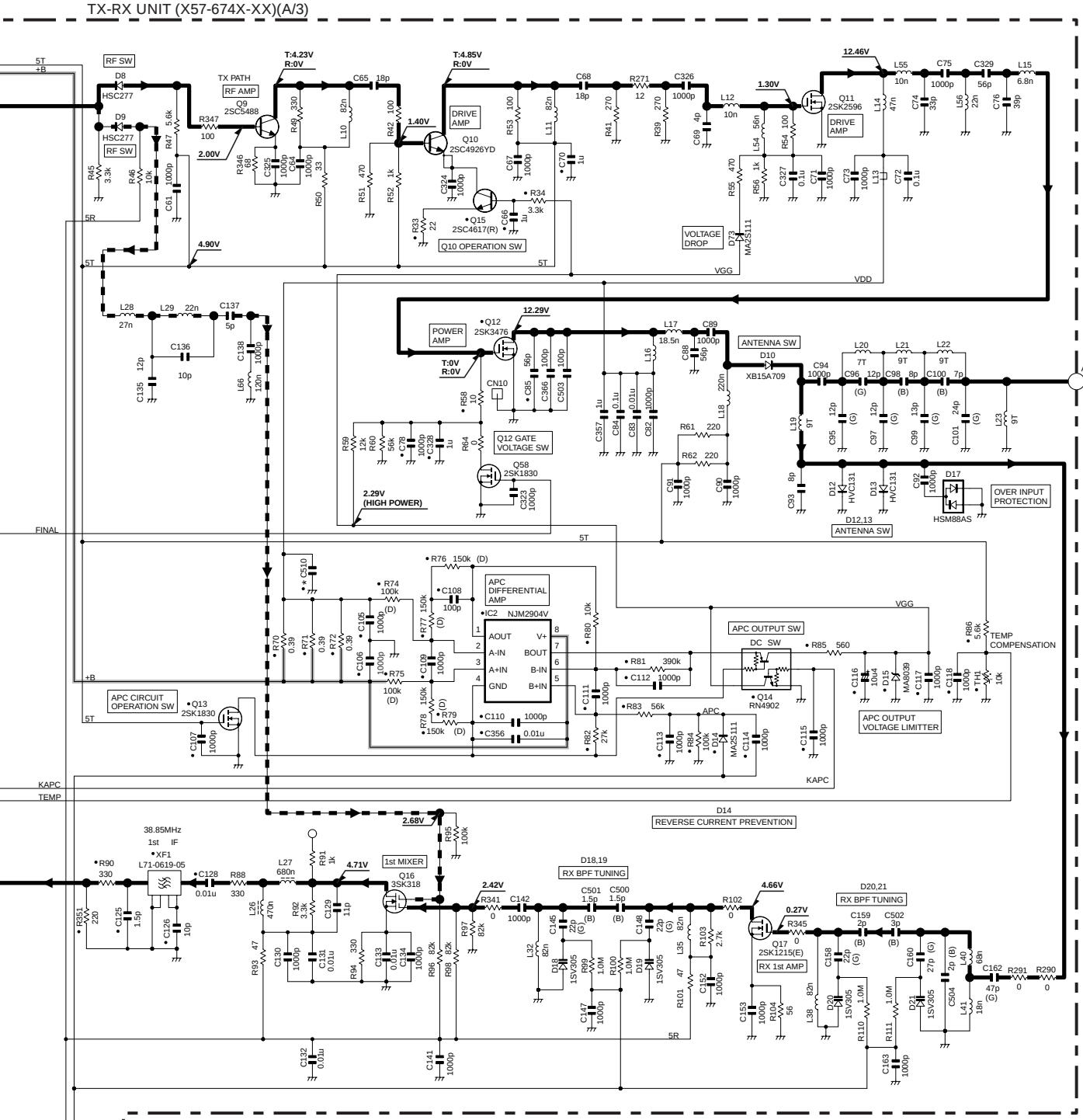

X57-674X-XX			D44	D47	D60	D62	D63	Q59	C320	C321	C350	C510	C511	C512	C514	C515	C516	C517
0-11	TH-K2AT	K,K2	B30-2205-05	B30-2205-05	NO	MA2S111	MA2S111	2SK1830	8200p	8200p	0.1u	NO	NO	NO	NO	NO	NO	NO
2-71	TH-K2E	E	NO	NO	MA2S111	MA2S111	NO	NO	NO	NO	NO	100p	470p	470p	470p	470p	470p	470p
2-72	TH-K2ET	E3	B30-2205-05	B30-2205-05	NO	MA2S111	NO	NO	NO	NO	NO	100p	470p	470p	470p	470p	470p	470p
0-21	TH-K2AT	M,M2	B30-2205-05	B30-2205-05	NO	NO	MA2S111	NO	NO	NO	NO	NO	NO	NO	NO	NO	NO	NO

X57-674X-XX			R230	R257	R258	R259	R261	R264	R344	CN17
0-11	TH-K2AT	K,K2	220	56k	680	680k	47k	NO	100k	NO
2-71	TH-K2E	E	NO	NO	0	0	NO	0	NO	E23-1081-05
2-72	TH-K2ET	E3	220	NO	0	0	NO	0	NO	E23-1081-05
0-21	TH-K2AT	M,M2	220	NO	0	0	NO	0	NO	NO

Note : The components marked with a dot (●) are parts of layer1.

Reference voltage value are measured when the power supply voltage is 13.8V(DC IN).

ManualsPlus.com

TH-K2AT/K2E/K2ET SCHEMATIC DIAGRAM

X57-674X-XX			D44	D47	D60	D62	D63	Q59	C320	C321	C350	C510	C511	C512	C514	C515	C516	C517
0-11	TH-K2AT	K,K2	B30-2205-05	B30-2205-05	NO	MA2S111	MA2S111	2SK1830	8200p	8200p	0.1u	NO	NO	NO	NO	NO	NO	NO
2-71	TH-K2E	E	NO	NO	MA2S111	MA2S111	NO	NO	NO	NO	NO	100p	470p	470p	470p	470p	470p	470p
2-72	TH-K2ET	E3	B30-2205-05	B30-2205-05	NO	MA2S111	NO	NO	NO	NO	NO	100p	470p	470p	470p	470p	470p	470p
0-21	TH-K2AT	M,M2	B30-2205-05	B30-2205-05	NO	NO	MA2S111	NO	NO	NO	NO	NO	NO	NO	NO	NO	NO	NO

X57-674X-XX			R230	R257	R258	R259	R261	R264	R344	CN17
0-11	TH-K2AT	K,K2	220	56k	680	680k	47k	NO	100k	NO
2-71	TH-K2E	E	NO	NO	0	0	NO	0	NO	E23-1081-05
2-72	TH-K2ET	E3	220	NO	0	0	NO	0	NO	E23-1081-05
0-21	TH-K2AT	M,M2	220	NO	0	0	NO	0	NO	NO

Note : The components marked with a dot (●) are parts of layer1.

Reference voltage value are measured when the power supply voltage is 13.8V(DC IN).

Downloaded by RadioAmateur.EU

manuals.com

Transmitter Section

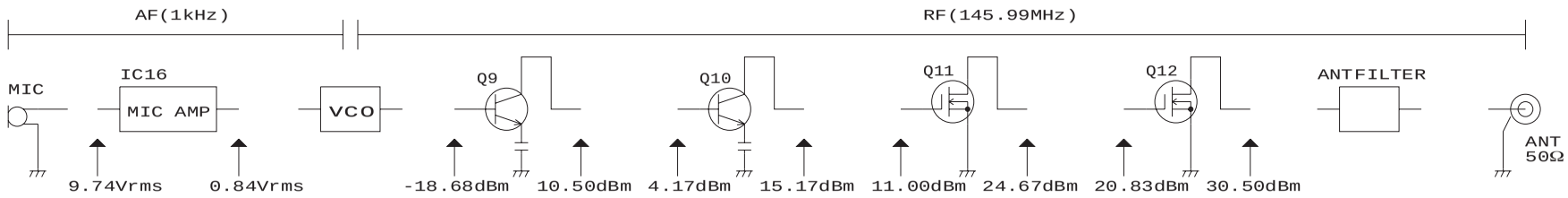

All voltage levels must be measured at High power transmission.
The RF and IF sections are measured by using a spectrum analyzer.
After setting the standard (1 kHz, 3 kHz Dev.) deviation, each voltage of the AF section is measured by using an AF VTVM or osciloscope.
The level for each point is measured without removing parts or cutting the pattern.

Receiver Section

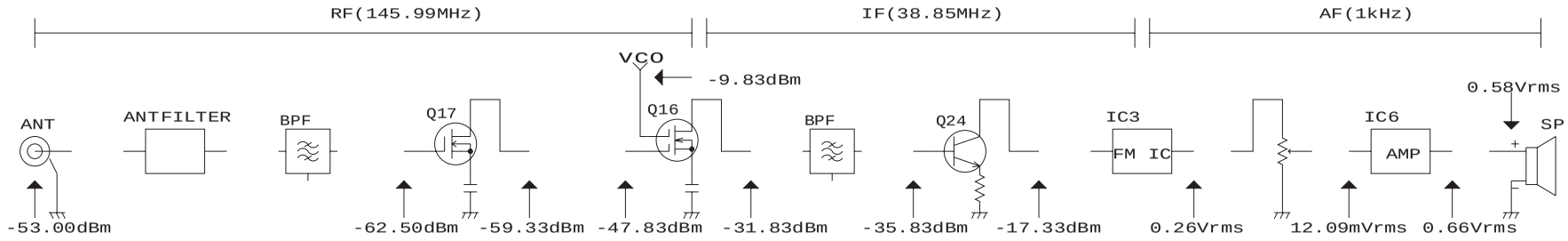

All voltage levels must be measured after setting the AF output voltage at 0.58V rms.
The RF and IF sections are measured by using a spectrum analyzer.
Each voltage of the AF section is measured by using an AF VTVM or osciloscope.
The level for each point is measured without removing parts or cutting the pattern.

ManualsPlus.com

BLOCK DIAGRAM

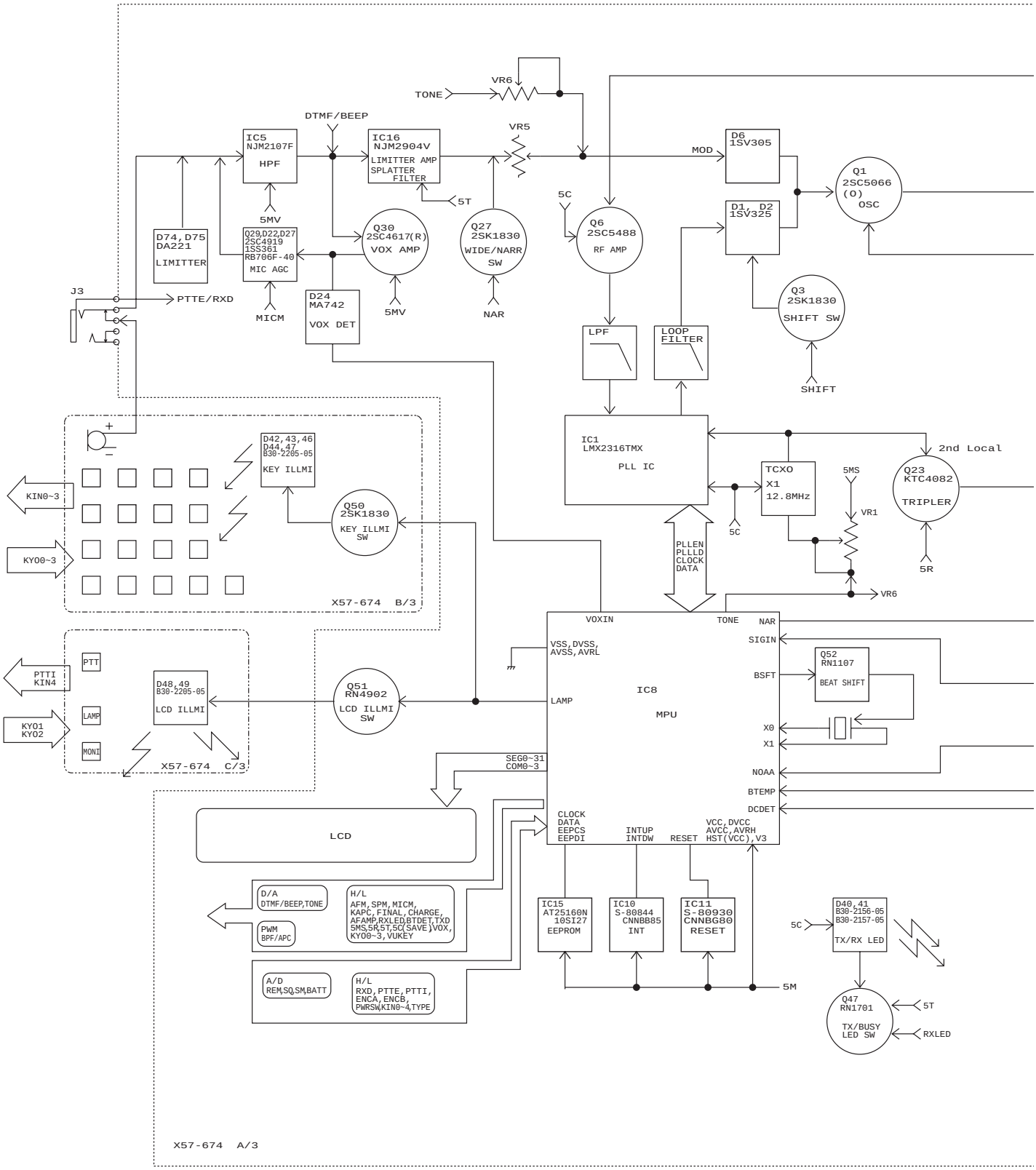

Downloaded by
RadioAmateur.EU

ManualsPlus.com

BLOCK DIAGRAM

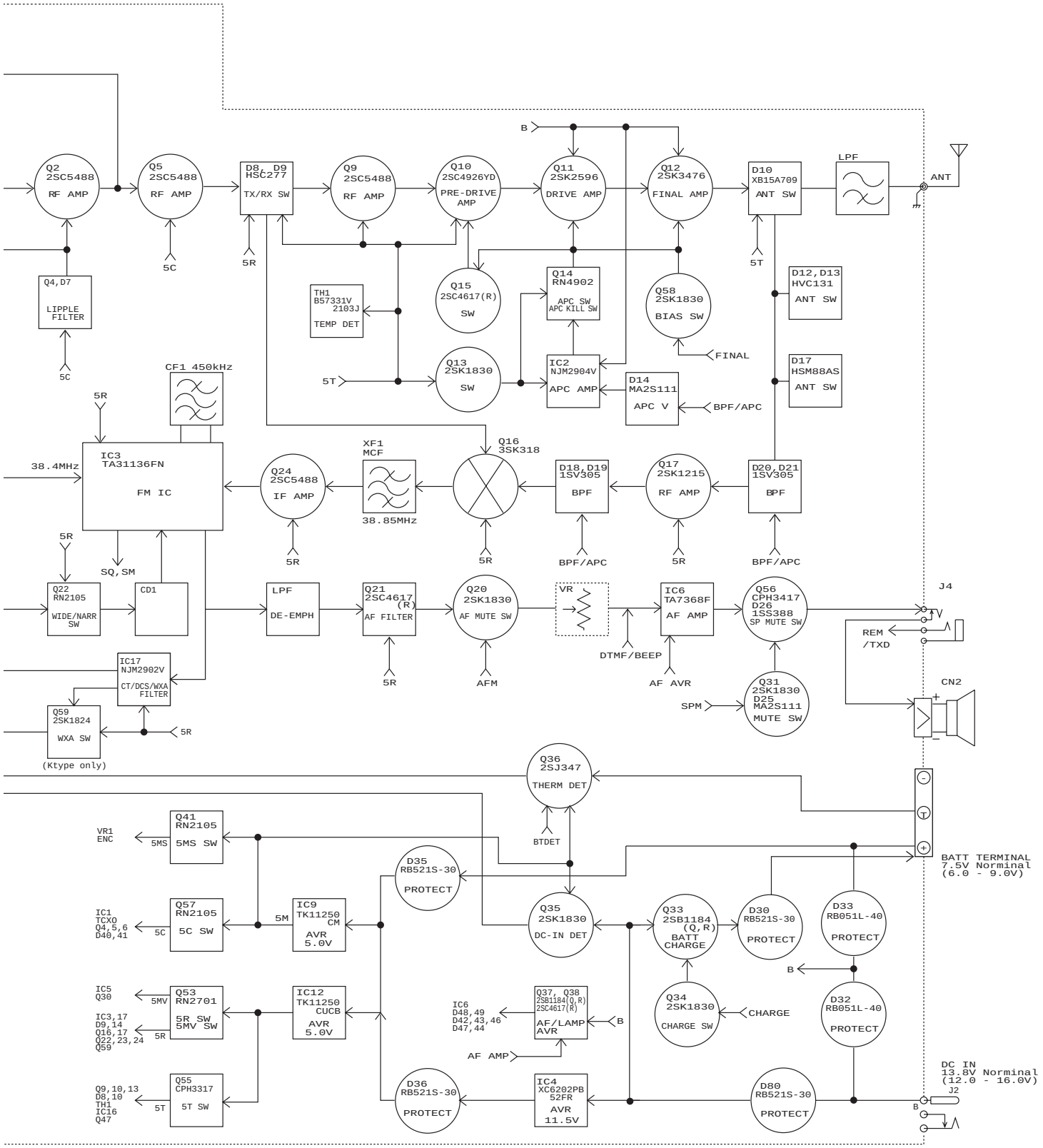

ManualsPlus.com

BC-21 (WALL CHARGER) / PB-43N (Ni-MH BATTERY PACK)

BC-21 External View

Photo is K type.

BC-21 Specifications

Rated output voltage ..... DC 13.8V ±5%
Rated output current 150mA
Charging time ..... Approx. 12 hours (PB-43N)

PB-43N External View

PB-43N Schematic diagram

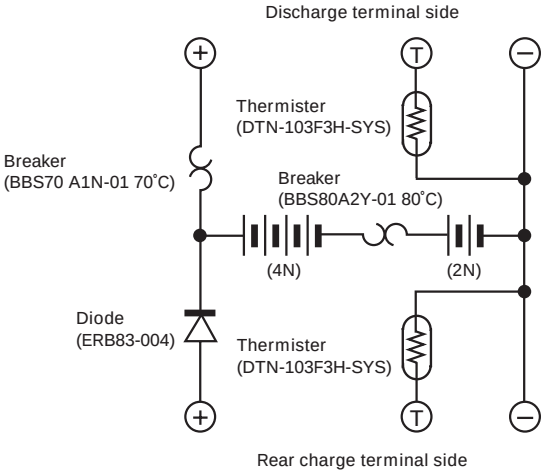

PB-43N Specifications

Voltage ..... 7.2V (1.2V x 6)
Charging current 1100mAh
Dimensions (Projections included) ... 58W x 100.8H x 16.8D (mm)
Charger and charging time
KSC-24 (Rapid charger) ..... Approx. 60 minutes
Weight 210g

ManualsPlus.com

BT-14 (BATTERY CASE) / PG-4Y (PROGRAMMING INTERFACE CABLE) / MCP-1A (MEMORY CONTROL PROGRAM)

BT-14 (6 AA/LR6)
External View

PG-4Y
External View

MCP-1A

- Available free for downloading from the Kenwood website:
  http://www.kenwood.com/i/products/info/amateur.html

TH-K2AT/K2E/K2ET

ManualsPlus.com

SPECIFICATIONS

General		TH-K2AT		TH-K2E	TH-K2ET
Market code		K, K2	M, M2	E	E3
Number of memory channels		100 (50) + 9 special function memories	100 (50) + 8 special function memories		
Antenna impedance (Connector type)		50 Ω (SMA)			
Operating Voltage	DC IN Jack	DC 12.0 ~ 16.0 V (13.8 V nominal)			
	Battery terminal	DC 6.0 ~ 9.0 V (7.2 V nominal)			
Grounding method		Negative ground			
Current	Transmit with H, 13.8 V (DC IN)	1.8 A or less			
	Transmit with H, 7.2 V (PB-43N)	2.0 A or less			
	Transmit with M, 7.2 V (PB-43N)	1.5 A or less			
	Transmit with L, 7.2 V (PB-43N)	0.8 A or less			
	Receive (no signal)	100 mA or less			
	Battery Saver ON (Average)	30 mA or less			
Usable temperature range		–20° C ~ 60° C (–4° F ~ 140° F) –10° C ~ 60° C (+14° F ~ 140° F) with PB-43N			
Frequency stability		Within ±5 ppm (–20° C ~ 60° C)			
Dimensions (W x H x D Projections not included)		58 x 110 x 28.4 mm / 2 7/16" x 4 6/16" x 1 2/16" with PB-43N 58 x 110 x 29.6 mm / 2 7/16" x 4 6/16" x 1 5/32" with BT-14			
weight		Approx. 320 g / 11.3 oz with PB-43N Approx. 320 g / 11.3 oz with BT-14			
Transmitter					
Transmission Mode		F3E (FM) / F2D (FM)			
Frequency range		144 ~ 148 MHz	136 ~ 174 MHz	144 ~ 146 MHz	
Output Power	DC-IN jack (13.8 V)	H: 5.0 W (approx.) M: 1.5 W (approx.) L: 0.5 W (approx.)			
	PB-43N (7.2 V)	H: 5.0 W (approx.) M: 1.5 W (approx.) L: 0.5 W (approx.)			
	BT-14 (9.0 V)	H: 3.5 W (approx.) M: 1.2 W (approx.) L: 0.3 W (approx.)			
Modulation		Reactance			
Maximum frequency deviation		±5 kHz (FM) / ±2.5 kHz (NFM)			
Squrious emissions		–60 dB or less (H and M power), –50 dB or less (L power)			
Microphone impedance		2 kΩ			
Receiver					
Reception Mode		F3E (FM) / F2D (FM)			
Frequency range		136 ~ 174 MHz		144 ~ 146 MHz	
Intermediate Frequency (IF)		1st IF : 38.85 MHz 2nd IF : 450kHz			
Circuit type		Double super - heterodyne			
Sensitivity		FM (12 dB SINAD) 2m amateur radio band: 0.18 μV or less			
Squelch Sensitivity		0.13 μV or less (within 2m amateur radio band)			
Selectivity		–6 dB / 10 kHz or less –40 dB / 28 kHz or less (within 2m amateur radio band)			
Audio output (10% distortion)		400 mW or higher (7.2 V, 8 Ω load)			

Note: All specifications (General, Transmitter and Receiver) are guaranteed within the amateur radio band.

KENWOOD CORPORATION

2967-3, Ishikawa-machi, Hachioji-shi, Tokyo 192-8525, Japan

KENWOOD U.S.A. CORPORATION
P.O. BOX 22745, 2201 East Dominguez Street, Long Beach, CA 90801-5745, U.S.A.

KENWOOD ELECTRONICS CANADA INC.
6070 Kestrel Road, Mississauga, Ontario, Canada L5T 1S8

KENWOOD ELECTRONICS DEUTSCHLAND GMBH
Rembrücker Str. 15, 63150 Heusenstamm, Germany

KENWOOD ELECTRONICS BELGIUM N.V.
Leuvensesteenweg 248 J, 1800 Vilvoorde, Belgium

KENWOOD ELECTRONICS FRANCE S.A.
13, Boulevard Ney, 75018 Paris, France

KENWOOD ELECTRONICS U.K. LIMITED
KENWOOD House, Dwight Road, Watford, Herts., WD18 9EB, United Kingdom

KENWOOD ELECTRONICS EUROPE B.V.
Amsterdamseweg 37, 1422 AC Uithoorn, The Netherlands

KENWOOD ELECTRONICS ITALIA S.p.A.
Via G. Sirtori, 7/9 20129 Milano, Italy

KENWOOD IBERICA S.A.
Bolivia, 239-08020 Barcelona, Spain

KENWOOD ELECTRONICS AUSTRALIA PTY. LTD.
(A.C.N. 001 499 074)
16 Giffnock Avenue, Centrecourt Estate, North Ryde, N.S.W. 2113, Australia

KENWOOD ELECTRONICS (HONG KONG) LTD.
Unit 3712-3724, Level 37, Tower one Metroplaza, 223 Hing Fong Road, Kwai Fong, N.T., Hong Kong

KENWOOD ELECTRONICS TECHNOLOGIES(S) PTE LTD.
Sales Marketing Division
1 Ang Mo Kio Street 63, Singapore 569110

100%

Downloaded by RadioAmateur.EU