VHF FM TRANSCEIVER

TK-2202/2206

SERVICE MANUAL

KENWOOD

ManualsPlus.com

© 2004-2 PRINTED IN JAPAN
B51-8677-00 (S) 1246

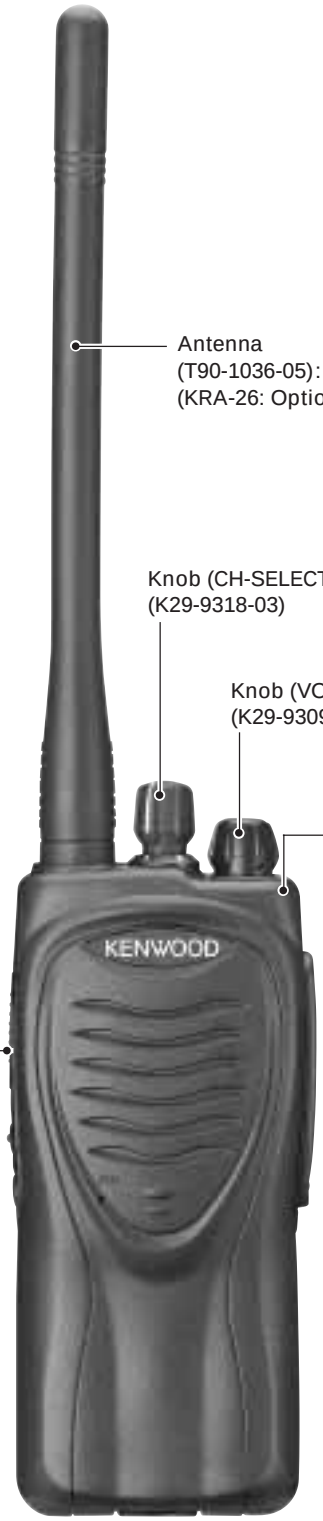

Antenna
(T90-1036-05): TK-2202(K,M)
(KRA-26: Option) TK-2206 (M)

Knob (CH-SELECTOR)
(K29-9318-03)

Knob (VOLUME)
(K29-9309-03)

Cabinet assy
(A02-3852-23)(8CH):
TK-2202(K,M)
(A02-3851-23)(16CH):
TK-2206(M)

Knob (PTT)
(K29-9308-03)

Photo is TK-2202.

CONTENTS

GENERAL 2
SYSTEM SET-UP 2
REALIGNMENT 3
DISASSEMBLY FOR REPAIR 5
CIRCUIT DESCRIPTION 8
TERMINAL FUNCTION 12
SEMICONDUCTOR DATA 12
COMPONENTS DESCRIPTION 13
PARTS LIST 14
EXPLODED VIEW 20
PACKING 21
ADJUSTMENT 23
PC BOARD
TX-RX UNIT (X57-6870-20) 28
SCHEMATIC DIAGRAM 32
BLOCK DIAGRAM 36
LEVEL DIAGRAM 38
KSC-31 / KNB-29N / KNB-30A / KBH-10 39
SPECIFICATIONS ..... **BACK COVER**

TK-2206 :
Does not come with antenna.
Antenna is available as an option.

ManualsPlus.com

GENERAL / SYSTEM SET-UP

INTRODUCTION

SCOPE OF THIS MANUAL

This manual is intended for use by experienced technicians familiar with similar types of commercial grade communications equipment. It contains all required service information for the equipment and is current as of the publication date. Changes which may occur after publication are covered by either Service Bulletins or Manual Revisions. These are issued as required.

ORDERING REPLACEMENT PARTS

When ordering replacement parts or equipment information, the full part identification number should be included. This applies to all parts, components, kits, or chassis. If the part number is not known, include the chassis or kit number of which it is a part, and a sufficient description of the required component for proper identification.

Unit / Model & destination		TX-RX Unit	Frequency range	Remarks
TK-2202	K,M	X57-6870-20	136~174MHz	IF1 : 38.85MHz LOC : 38.4MHz
TK-2206	M			

PERSONAL SAFETY

The following precautions are recommended for personal safety:

- DO NOT transmit until all RF connectors are verified secure and any open connectors are properly terminated.
- SHUT OFF and DO NOT operate this equipment near electrical blasting caps or in an explosive atmosphere.
- This equipment should be serviced by a qualified technician only.

SERVICE

This radio is designed for easy servicing. Refer to the schematic diagrams, printed circuit board views, and alignment procedures contained within.

SYSTEM SET-UP

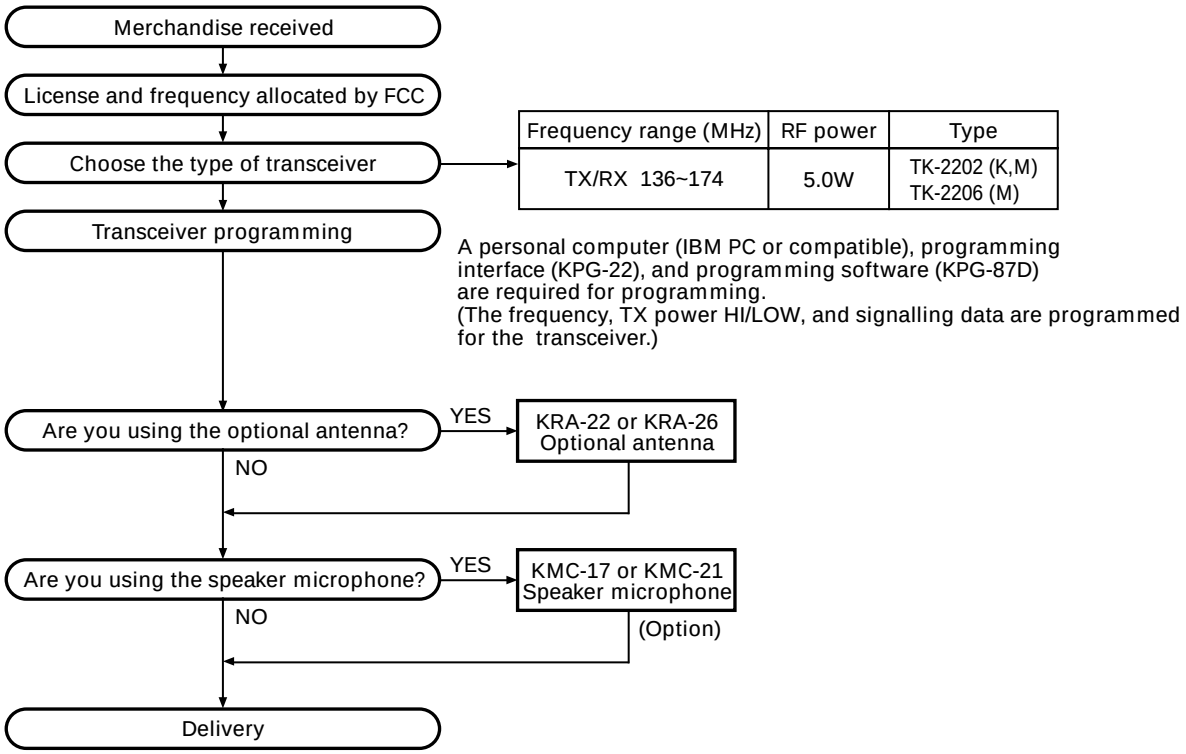

ManualsPlus.com

REALIGNMENT

REALIGNMENT

1. Modes

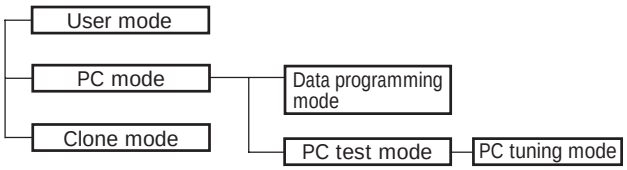

Mode	Function
User mode	For normal use.
PC mode	Used for communication between the radio and PC (IBM compatible).
Data programming mode	Used to read and write frequency data and other features to and from the radio.
PC test mode	Used to check the radio using the PC. This feature is included in the KPG-87D.
Clone mode	Used to transfer programming data from one radio to another.

2. How to Enter Each Mode

Mode	Operation
User mode	Power ON
PC mode	Received commands from PC
Clone mode	[PTT]+[Side2]+Power ON (Two seconds)

3. PC Mode

3-1. Preface

The TK-2202/2206 transceivers are programmed using a personal computer, a programming interface (KPG-22) and programming software (KPG-87D).

The programming software can be used with an IBM PC or compatible. Figure 1 shows the setup of an IBM PC for programming.

3-2. Connection procedure

1. Connect the TK-2202/2206 to the personal computer with the interface cable.
2. When the POWER is switched on, user mode can be entered immediately. When the PC sends a command, the radio enters PC mode.
   When data is transmitting from the transceiver, the red LED lights.
   When data is received by the transceiver, the green LED lights.

Notes:

- The data stored in the personal computer must match the model type when it is written into the EEPROM.
- Change the TK-2202/2206 to PC mode, then attach the interface cable.

3-3. KPG-22 description (PC programming interface cable: Option)

The KPG-22 is required to interface the TK-2202/2206 with the computer. It has a circuit in its D-subconnector (25-pin) case that converts the RS-232C logic level to the TTL level.

The KPG-22 connects the SP/MIC connector of the TK-2202/2206 to the computer's RS-232C serial port.

3-4. Programming software description

KPG-87D is the programming software for TK-2202/2206 supplied on a CD-ROM. This software runs under Windows 98, ME, Windows 2000 or XP on an IBM-PC or compatible machine.

The data can be input to or read from TK-2202/2206 and edited on the screen. The programmed or edited data can be printed out. It is also possible to tune the transceiver.

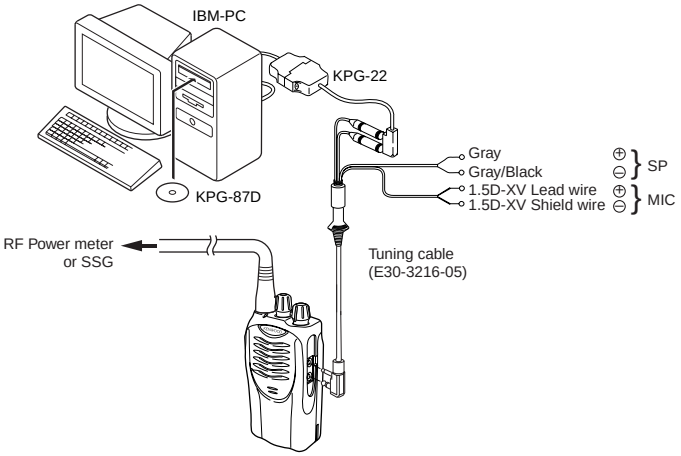

Fig. 1

4. Clone Mode

4-1. Outline

"Clone Mode" copies the transceiver data to another transceiver.

The dealer can copy the transceiver data to another transceiver even without the use of a personal computer.

4-2. Example

The transceiver can copy the programming data to one or more transceivers via RF communication.

The clone master and clone slave/s must be in Clone mode.

4-3. Operation

1. To switch the clone slave/s to Clone mode, press and hold the [PTT] and [side2] keys while turning the transceiver power ON.
2. Wait for 2 seconds. The LED will light orange and the transceiver will announce "Clone".
3. Select a channel table number using Side1(increment channel table) and Side2(decrement channnel table) keys.

ManualsPlus.com

REALIGNMENT

4. To switch the clone master to Clone mode, press and hold the [PTT] and [side2] keys while turning the transceiver power ON.
5. Wait for 2 seconds. The LED will light orange and the transceiver will announce "Clone".
6. Select the same channel table number as the clone slave/s.
7. Press [PTT] on the clone master to begin data transmission. When the clone slave starts to receive data, the LED will light green.
   When the clone master finishes sending data, a "confirmation" tone will sound.
   If data transmission fails while cloning, an "error" tone will sound from the Slave unit.
8. If the cloning fails, no data will be available in the Slave unit when it is returned to User mode.
9. When the cloning is successful, the Slave unit's "Scan" and "Key lock" functions will return to their default values (Scan = OFF, Key lock = OFF).

Notes:

- The dealer can clone data to two or more transceivers by repeating the above procedures.
- If the transceivers Clone Mode is configured as "Disabled", the transceiver cannot enter Clone mode.
- The table shown below will cover the frequency tables used for wireless cloning.
- Clone mode cannot be entered in battery low state.
- A unit cannot be a "Master Unit" if it is unprogrammed. If [PTT] is pressed, an "error" tone will sound.
- The language used in cloning depends on the "Model type" setting, not the FPU setting. C, C2, C5 and C6 type TK-3207 transceivers will use Chinese. Other types English.
- Once a unit is set to be the Master, it cannot be a slave after the data has been transmitted. This protects the data in the Master unit.
- Electronic interface may cause a failure in data transfer during Wireless Clone, such as when waveforms or electromagnetics are being performed at the workbench.
- Clone mode can be used ONLY by the authorized service personnel.
- The Clone mode setting must be configured as "Disable" before being delivered to the end-user.
- To clone, replace the antenna from both the master transceiver and the slave transceiver with a dummy load.
- The transmit output power is automatically set to Low in Clone mode.

Clone Frequency Table

Operating Frequency (MHz) / Clone Frequency Table	136~174
1	136.000
2	138.000
3	140.000
4	142.000
5	144.000
6	146.000
7	148.000
8	150.000
9	152.000
10	154.000
11	156.000
12	158.000
13	160.000
14	162.000
15	164.000
16	166.000
17	168.000
18	170.000
19	172.000
20	174.000

ManualsPlus.com

DISASSEMBLY FOR REPAIR

■ Removing the case assembly from the chassis.

1. Remove the volume knob ❶ and channel knob ❷.
2. Remove the two screws ❸.
3. Lift and remove the chassis from the case assembly ❹. (Use a flat-blade screwdriver to easily lift the chassis.)

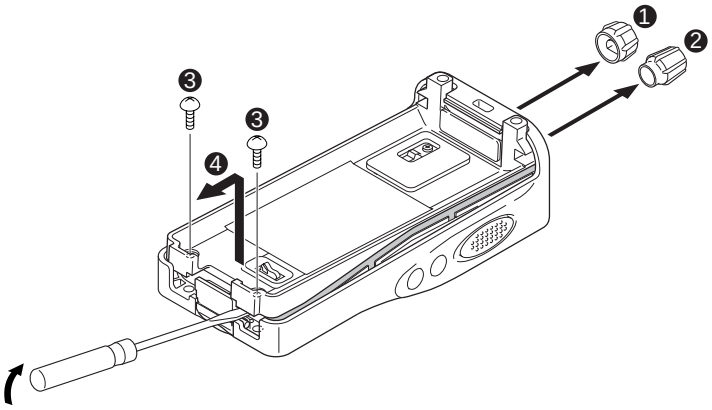

■ Removing the TX-RX unit from the chassis.

1. Remove the packing ❺ from the SP / MIC jack of the TX-RX unit.
2. Remove the eleven screws ❻ fixing the TX-RX unit.
3. Remove the fixing bracket ❼ of the SP / MIC.
4. Remove the solder of the antenna terminal with a soldering iron ❽.
5. Remove the solder of the positive terminal with a soldering iron ❾.

Note: You can remove the TX-RX unit from the chassis without removing the solder at the positive terminal. However, in this case, you can not attach the packing (G53-1605-03) that is on the positive terminal to the chassis in assembling. So, it is advisable to remove the solder on the positive terminal first.

6. Remove the FPC from the flat cable connector ❿.
7. Lift and remove the TX-RX unit from the chassis ⓫.

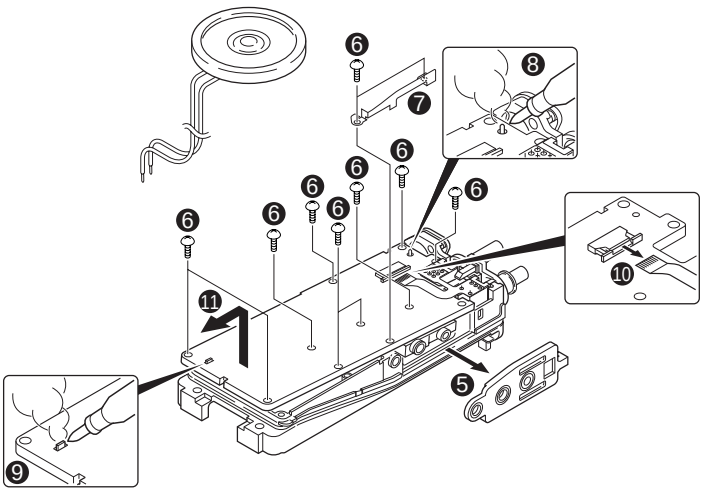

■ Removing the battery release lever from the case assembly.

1. Press the upper part of the lever toward the inside of the case assembly. One side of the shaft will be removed ❶.
2. Lift and remove the battery release lever from the case assembly ❷.

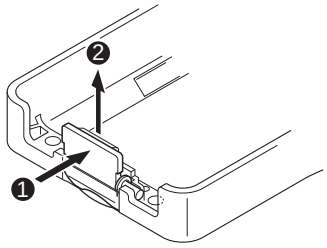

■ Attaching the battery release lever to the case assembly.

1. Insert one side of the shaft into the hole at the lever fitting section on the case assembly ❶.

Caution : The thin spring (G01-4543-04) should be positioned above the two tabs of the lever.

2. Tilt the battery release lever slightly forward ❷, so that the thick spring (G01-4542-04) is positioned below the case surface.
3. With the thick spring positioned below the case surface, attach the other side of the shaft to the case assembly by pressing the battery release lever ❸ until it snaps into place ❹.

Caution : Be careful not to tilt the battery release lever too forward.
If the battery release lever is pushed in this state where the two tabs come below the case surface, there is a possibility of damaging the two tabs.

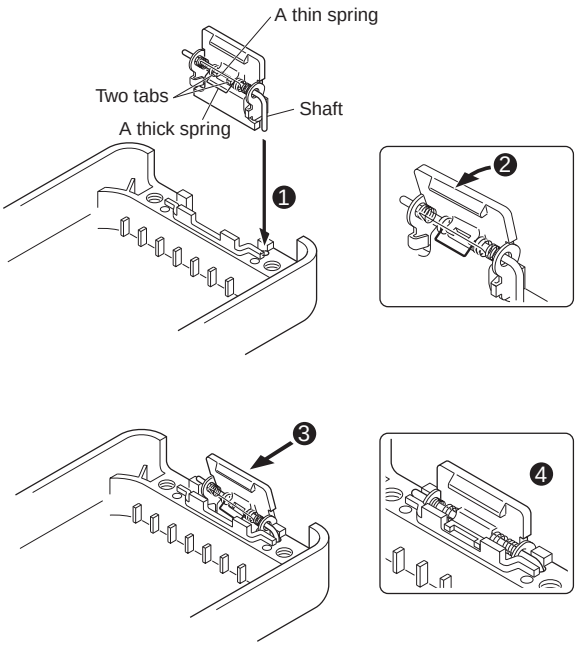

ManualsPlus.com

DISASSEMBLY FOR REPAIR

■ Assembling the battery release lever

1. Place the lever ❷ onto the stopper ❶.
2. Place the thick spring ❸ onto the lever.
3. Hook the right and left ends of the thin spring ❹ onto the tabs of the stopper, then place the thin spring onto the lever ❺.
4. Slide the shaft through the hole of the stopper and lever ❻.

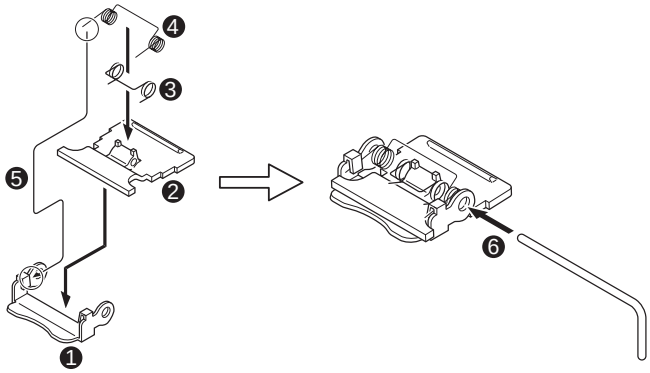

■ Cautions for assembly

1. Attaching the positive terminal to the chassis.

Always attach the positive terminal to the chassis, using the following procedures, before mounting the TX-RX unit onto the chassis.

1. Remove the holder assembly ❷ from the packing ❶ of the positive terminal.
2. Mount the packing of the positive terminal into the chassis hole ❸.
3. Mount the holder assembly into the packing of the positive terminal ❹.

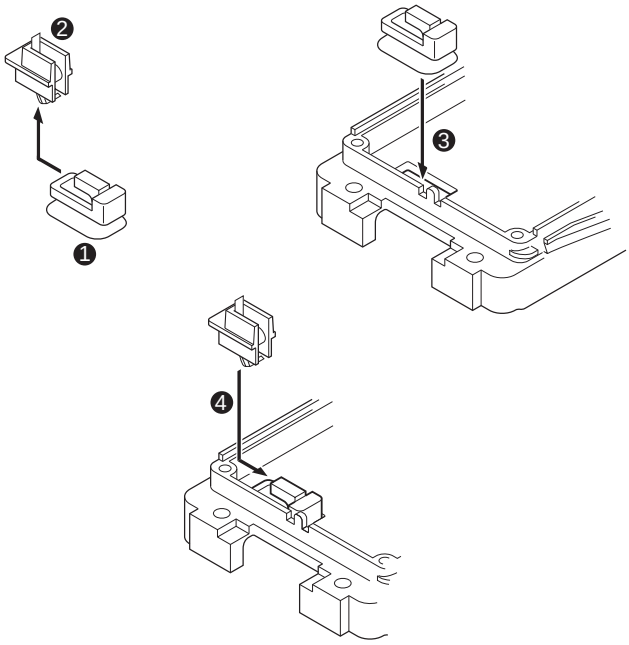

2. Mounting the chassis to the case assembly.

1. Confirm that the waterproof packing attached to the circumference of the chassis is securely inserted in the groove of the chassis ❶.
2. Attach the speaker to the speaker recess of the case assembly ❷. Make sure the speaker is securely inserted.

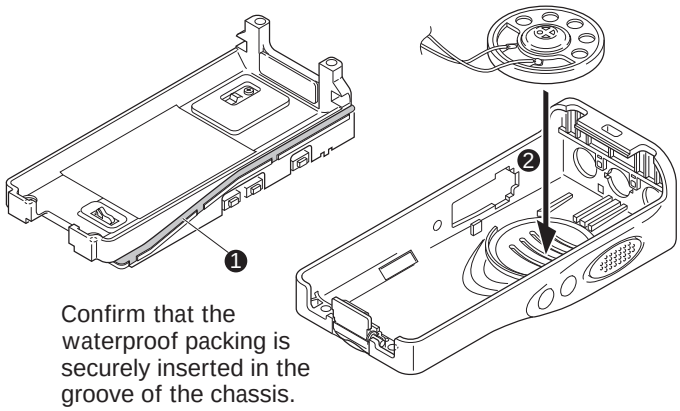

3. Insert the upper part of the chassis into the case assembly ❸.

Caution: Take care that the speaker lead wire is not caught by the microphone element.

4. Press the chassis ❹ and the case assembly together to attach them.

Caution: If the packing of the SP / MIC does not come to the correct position after attaching the chassis to the case assembly, reposition the packing with your fingers.

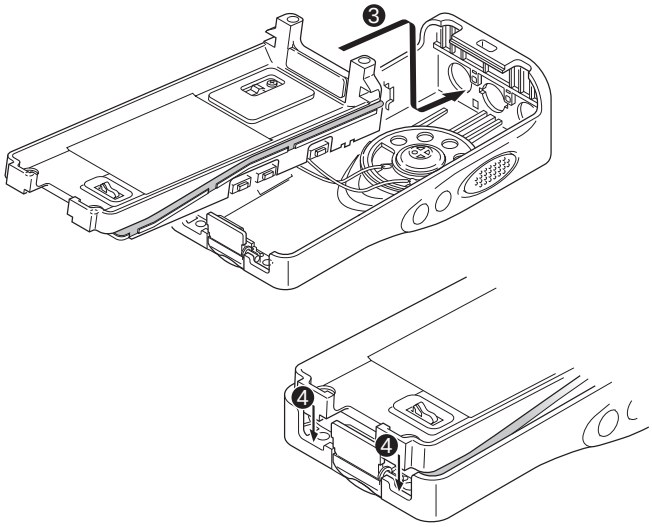

ManualsPlus.com

DISASSEMBLY FOR REPAIR

3. Attaching the antenna receptacle to the chassis.

Screw the antenna receptacle to the chassis in the order shown in the drawing so that the antenna receptacle comes to the center of the case hole.

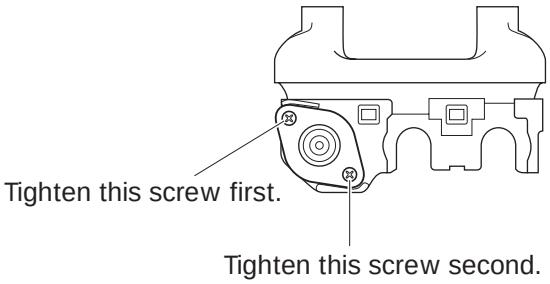

4. The nuts of the volume knob and channel knob

Note that the shapes, colors and heights of nuts of the volume knob and channel knob are different from one another. (The nut of volume knob is silver, and the nut of channel knob is gold)

Use the following jig when removing the nuts of the volume knob and channel knob.

- Jig (Part No. : W05-1012-00)

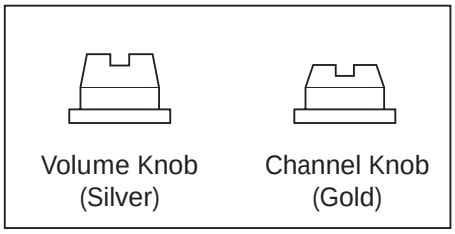

ManualsPlus.com

CIRCUIT DESCRIPTION

1. Frequency Configuration

The receiver utilizes double conversion. The first IF is 38.85 MHz and the second IF is 450 kHz. The first local oscillator signal is supplied from the PLL circuit.

The PLL circuit in the transmitter generates the necessary frequencies. Fig. 1 shows the frequencies.

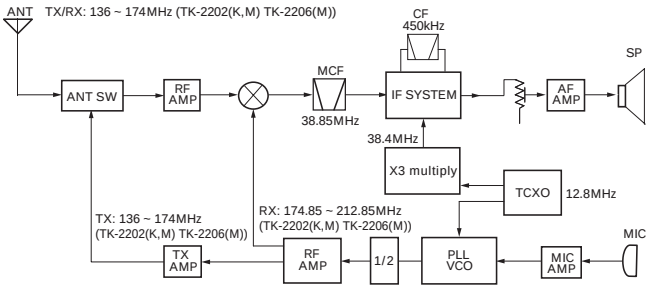

Fig. 1 Frequency configuration

2. Receiver

The frequency configuration of the receiver is shown in Fig. 2.

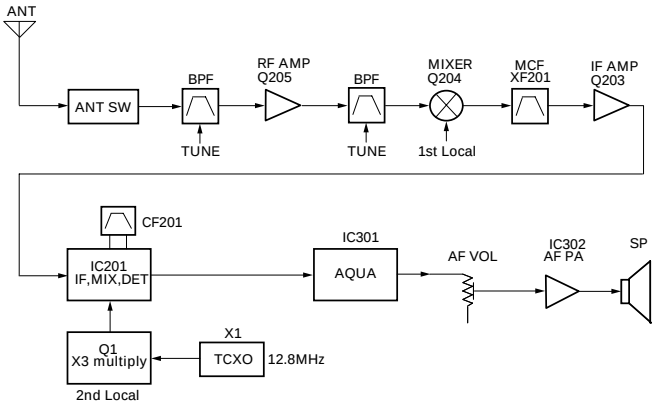

Fig. 2 Receiver section

1) Front End (RF AMP)

The signal coming from the antenna passes through the transmit/receive switching diode circuit, (D103,D104,D105 and D106) passes through a BPF (L214 and L213), and is amplified by the RF amplifier (Q205).

The resulting signal passes through a BPF (L209 and L211) and goes to the mixer. These BPFs are adjusted by variable capacitors (D203,D204,D205 and D206). The input voltage to the variable capacitor is regulated by voltage output from the microprocessor (IC405).

2) First Mixer

The signal from the front end is mixed with the first local oscillator signal generated in the PLL circuit by Q1 to produce a first IF frequency of 38.85 MHz.

The resulting signal passes through the XF201 MCF to cut the adjacent spurious and provide the opitimun characteristics, such as adjacent frequency selectivity.

3) IF Amplifier Circuit

The first IF signal is passed through a four-pole monolithic crystal filter (XF201) to remove the adjacent channel signal. The filtered first IF signal is amplified by the first IF amplifier (Q203) and then applied to the IF system IC (IC201). The IF system IC provides a second mixer, second local oscillator, limiting amplifier, quadrature detector and RSSI (Received Signal Strength Indicator). The second mixer mixes the first IF signal with the 38.4MHz of the second local oscillator output (TCXO X1) and produces the second IF signal of 450kHz.

The second IF signal is passed through the ceramic filter (CF201) to remove the adjacent channel signal. The filtered second IF signal is amplified by the limiting amplifier and demodulated by the quadrature detector with the ceramic discriminator (CD201). The demodulated signal is routed to the audio circuit.

4) Wide/Narrow Switching Circuit

Narrow and Wide settings can be made for each channel by switching the demodulation level.

The WIDE (low level) and NARROW (high level) data is output from IC405, pin 45.

When a WIDE (low level) data is received, Q202 turn on. When a NARROW (high level) data is received, Q202 turn off. Q202 turns on/off with the Wide/Narrow data and the IC201 detector output level is switched to maintain a constant output level during wide or narrow signals.

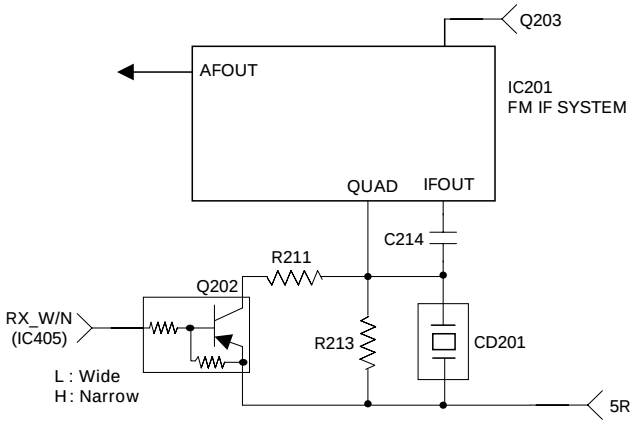

Fig. 3 Wide/Narrow switching circuit

5) Audio Amplifier Circuit

The demodulated signal from IC201 goes to AF amplifier through IC301.

The signal then goes through an AF volume control , and is routed to an audio power amplifier (IC302) where it is amplified and output to the speaker.

ManualsPlus.com

CIRCUIT DESCRIPTION

6) Squelch

Part of the AF signal from the IC enters the FM IC (IC201) again, and the noise component is amplified and rectified by a filter and an amplifier to produce a DC voltage corresponding to the noise level.
The DC signal from the FM IC goes to the analog port of the microprocessor (IC405). IC405 determines whether to output sounds from the speaker by checking whether the input voltage is higher or lower than the preset value. To output sounds from the speaker, IC405 sends a high signal to the SP MUTE line and turns IC302 on through Q303,Q304,Q305,Q306 and Q316. (See Fig. 4)

7) Receive Signalling

(1) QT/DQT
The output signal from FM IC(IC201) enters the microprocessor(IC405) through IC301. IC405 determines whether the QT or DQT matches the preset value, and controls the SP MUTE and the speaker output sounds according to the squelch results.

(2) MSK (Fleet Sync)
The MSK input signal from the FM IC goes to pin 31 of IC 301. The signal is demodulated by MSK demodulator in IC 301. The demodulated data goes to the CPU for processing.

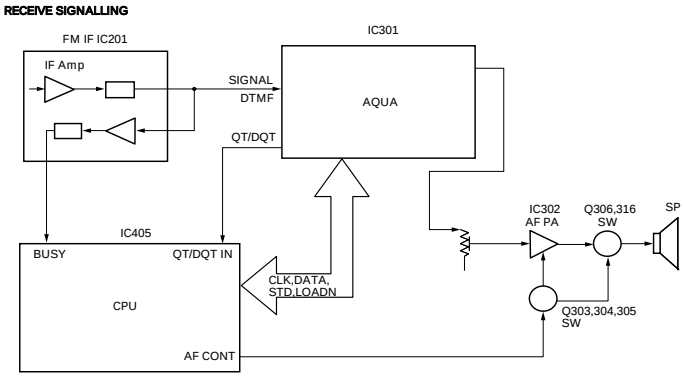

Fig. 4 AF amplifier and squelch

(3) DTMF
The DTMF input signal from the FM IC (IC201) goes to IC301. The decoded information is then processed by the CPU.

3. PLL Frequency Synthesizer

The PLL circuit generates the first local oscillator signal for reception and the RF signal for transmission.

1) PLL

The frequency step of the PLL circuit is 2.5, 5, 6.25 or 7.5kHz. A 12.8MHz reference oscillator signal is divided at IC1 by a fixed counter to produce an oscillator (VCO) output signal which is buffer amplified by Q2 then divided in IC1 by a programmable counter. The divided signal is compared in phase with the 5 or 6.25kHz reference signal from the phase comparator in IC1. The output signal from the phase comparator is filtered through a low-pass filter and passed to the VCO to control the oscillator frequency. (See Fig. 5)

2) VCO

The operating frequency is generated by Q4 in transmit mode and Q3 in receive mode. The oscillator frequency is controlled by applying the VCO control voltage, obtained from the phase comparator, to the varactor diodes (D4 and D7 in transmit mode and D5 and D9 in receive mode). The RX pin is set high in receive mode causing Q5 turn on.
The TX pin is set high in transmit mode. The outputs from Q3 and Q4 are amplified by Q6 and sent to the RF amplifiers.

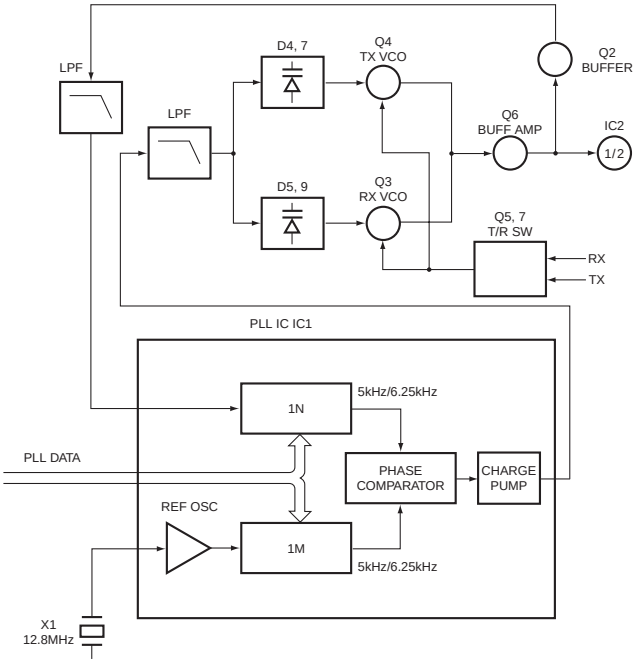

Fig. 5 PLL circuit

3) Unlock Detector

If a pulse signal appears at the LD pin of IC1, an unlock condition occurs, and the DC voltage obtained from C4,R5 and D1 causes the voltage applied to the microprocessor to go low. When the microprocessor detects this condition, the transmitter is disabled, ignoring the push-to-talk switch input signal.

4. Transmitter System

1) Microphone Amplifier

The signal from the microphone passes through the IC301. When encoding DTMF, it is turned OFF for muting the microphone input signal by IC301.
The signal passes through the Audio processor (IC301) for the maximum deviation adjustment, and goes to the VCO modulation input.

ManualsPlus.com

CIRCUIT DESCRIPTION

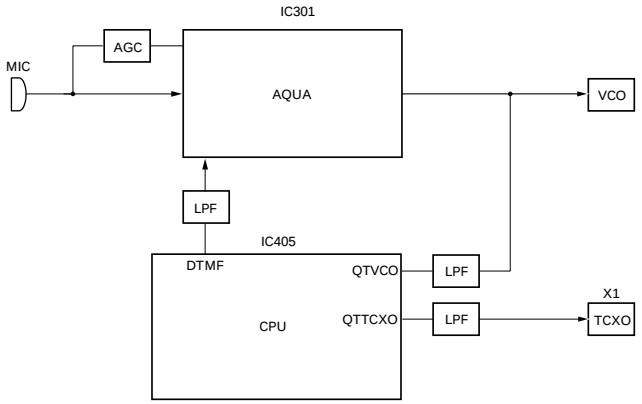

Fig. 6 Microphone amplifier

2) Drive and Final Amplifier

The signal from the T/R switch (D101 is on) is amplified by the pre-drive (Q102) and the drive amplifier (Q103) to 50mW. The output of the drive amplifier is amplified by the RF power amplifier (Q106) to 5.0W (1W when the power is low). The RF power amplifier consists of two MOS FET stages. The output of the RF power amplifier is then passed through the harmonic filter (LPF) and antenna switch (D103 and D104) and applied to the antenna terminal.

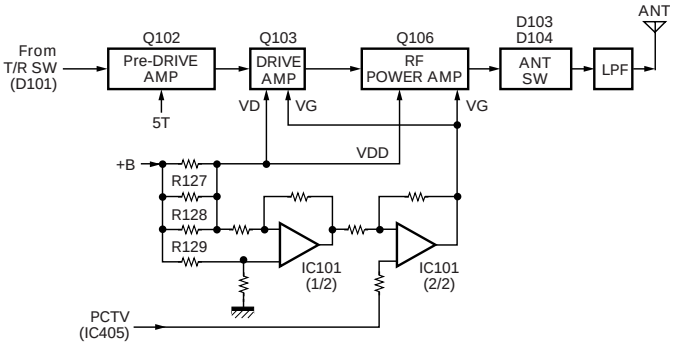

Fig. 7 Drive and final amplifier and APC circuit

3) APC Circuit

The APC circuit always monitors the current flowing through the RF power amplifier (Q106) and keeps a constant current. The voltage drop at R127, R128 and R129 is caused by the current flowing through the RF power amplifier and this voltage is applied to the differential amplifier IC101(1/2). IC101(2/2) compares the output voltage of IC101(1/2) with the reference voltage from IC405. The output of IC101(2/2) controls the VG of the RF power amplifier, drive amplifier and pre-drive amplifier to make both voltages the same. The change of power high/low is carried out by the change of the reference voltage.

4) Encode Signalling

(1) QT/DQT

QT,DQT data of the QTTCXO Line is output from pin 28 of the CPU. The signal passes through a low-pass CR filter and goes to the TCXO(X1).

The QT,DQT data of the QTVCO Line is output from pin 24 of the CPU. The signal passes through a low pass CR filter, mixes with the audio signal, and goes to the VCO modulation input. TX deviation is adjusted by the CPU.

(2) DTMF

High-speed data is output from pin 2 of the CPU. The signal passes through a low-pass CR filter, and provides a TX and SP out tone, and is then applied to the audio processor (IC301). The signal is mixed with the audio signal and goes to the VCO.

TX deviation is adjusted by the CPU.

(3) MSK (Fleet Sync)

Fleet Sync utilizes 1200bps and 2400bps MSK signal is output from pin 6 of IC301. And is routed to the VCO. When encoding MSK, the microphone input signal is muted.

5. Power Supply

There are four 5V power supplies for the microprocessor: 5M,5C,5R, and 5T. 5M for microprocessor is always output while the power is on. 5M is always output, but turns off when the power is turned off to prevent malfunction of the microprocessor.

5C is a common 5V and is output when SAVE is not set to OFF.

5R is 5V for reception and output during reception.

5T is 5V for transmission and output during transmission.

6. Control Circuit

The control circuit consists of a microprocessor (IC405) and its peripheral circuits. It controls the TX-RX unit. IC405 mainly performs the following:

(1) Switching between transmission and reception by the PTT signal input.
(2) Reading system, group, frequency, and program data from the memory circuit.
(3) Sending frequency program data to the PLL.
(4) Controlling squelch on/off by the DC voltage from the squelch circuit.
(5) Controlling the audio mute circuit by the decode data input.
(6) Transmitting tone and encode data.

1) Frequency Shift Circuit

The microprocessor (IC405) operates at a clock of 7.3728MHz. This oscillator has a circuit that shifts the frequency by BEAT SHIFT SW (Q407,Q408).

A beat sound may be able to be evaded from generation if "Beat Shift" is set to ON when it is generated in the internal spurious transmission modulated sound of a transceiver.

ManualsPlus.com

CIRCUIT DESCRIPTION

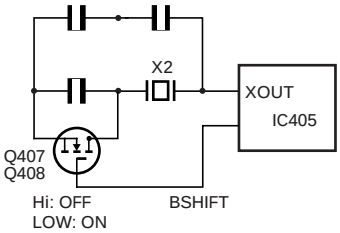

Fig. 8 Frequency shift circuit

2) Memory Circuit

Memory circuit consists of the CPU (IC405) and an EEPROM (IC406). An EEPROM has a capacity of 64k bits that contains the transceiver control program for the CPU and data such as transceiver channels and operating features.

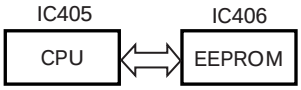

Fig. 9 Memory circuit

3) Low Battery Warning

The battery voltage is checked using by the microprocessor. The transceiver generates a warning tone when it falls below the warning voltage shown in the table.

(1) The red LED blinks when the battery voltage falls below the voltage (1) shown in the table during transmission.

Note:

The transceiver checks the battery voltage during reception even when, in the FPU, the Battery Warning status function is set to "On TX" (default setting).

However, the LED does not blink during reception. During transmission, the LED blinks to generate the warning tone of a low battery voltage.

(2) The transceiver immediately stops transmission when the battery voltage falls below the voltage (2) shown in the table. A message tone beeps while the PTT switch is released.

	Ni-Cd Battery	Ni-MH Battery
(1)	6.2[V]	6.2[V]
(2)	5.9[V]	5.9[V]

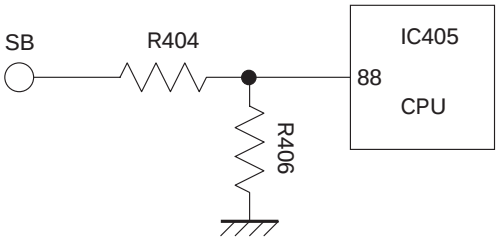

Fig. 10 Low battery warning

7. Control System

Keys and channel selector circuit.

The signal from the keys and channel selector are directly input to the microprocessor, as shown in fig. 11.

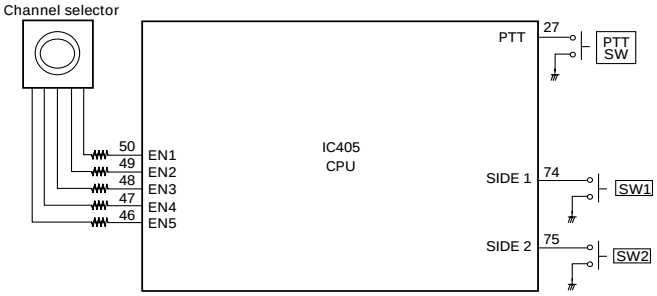

Fig. 11 Control system

ManualsPlus.com

TERMINAL FUNCTION / SEMICONDUCTOR DATA

TERMINAL FUNCTION

■ CN401

Pin No.	Name	I/O	Function
1	B	I	B (Battery Voltage)
2	SB	O	Switched B
3	SP1	I	Audio input
4	SP2	O	Audio output
5	GND	-	GND
6	EN1	I	Encoder pulse input
7	EN2	I	Encoder pulse input
8	GND	-	GND
9	EN3	I	Encoder pulse input
10	EN4	I	Encoder pulse input
11	EN5	I	Encoder pulse input

SEMICONDUCTOR DATA

Microprocessor : 30622MAA-B89GP (TX-RX UNIT : IC405)

■ Pin function

Pin No.	Port Name	I/O	Function
1	PCTV	O	APC/BPF control data output
2	DTMF	O	DTMF/ Beep output
3	NC	-	NC
4	EEPDAT	I/O	EEPROM data input/output
5	EEPCLK	O	EEPROM clock output
6	BYTE	-	GND
7	GND	-	GND
8	BSHIFT	O	Beat shift switch
9	NC	-	NC
10	RESET	I	CPU reset
11	XOUT	O	CPU clock (7.3728MHz)
12	VSS	-	GND
13	XIN	I	CPU clock (7.3728MHz)
14-15	VCC	-	+5V
16	INT	I	Battery voltage monitor input
17	TCLK/DTRDO	I	Base band IC data input
18	RDF/FD	I	Base band IC data input
19	SCLK	O	Base band IC clock output
20	D I/O	I/O	Base band IC data input / output
21	TDATA/DTRCLK	O	Base band IC data output
22	DIR	O	Base band IC data output
23	STD	I	Base band IC data input
24	QT VCO	O	QT/DQT output
25	DTRLOADN	O	Base band IC data output
26	1/2 OSC	O	3.6864 MHz (7.3728 MHz/2)
27	PTT	I	PTT switch input
28	QT TCXO	O	QT/DQT output
29	TXD	O	Serial data (FPU/FLASH)
30	RXD	I	Serial data (FPU/FLASH)
31	GND	-	GND
32	APCSW	O	APC switch
33-34	NC	-	NC
35	DCSW	O	APC voltage discharge switch
36	TX_W/N	O	TX Wide/Narrow switch
37	RX_SW	O	RX VCO switch
38	TX_SW	O	TX VCO switch
39	GND	-	GND
40	PLL_UL	I	PLL unlock detect input
41	PLL_STB	O	PLL strobe output
42	PLL_DAT	O	PLL data output
43	PLL_CLK	O	PLL clock output
44	VCC	-	+5V
45	RX_W/N	O	RX Wide/Narrow switch
46	EN5	I	Channel selector input
47	EN4	I	Channel selector input
48	EN3	I	Channel selector input
49	EN2	I	Channel selector input
50	EN1	I	Channel selector input
51	OPTDET	I	Headset input detect
52	AF_CONT	O	Speaker mute
53-59	NC	-	NC
60	VCC	-	+5V
61	NC	-	NC
62	VSS	-	GND
63-64	GND	-	GND
65-71	NC	-	NC
72	LEDTX	O	Red LED lights control output
73	LEDRX	O	Green LED lights control output
74	PF1	I	SIDE1 key input
75	PF2	I	SIDE2 key input
76	SIM1	-	GND
77	SIM2	-	GND
78-79	NC	-	NC
80	5T_C	O	5T control output
81	5R_C	O	5R control output
82	5C_C	O	5C control output
83-87	NC	-	NC
88	BATT	I	Battery voltage input
89	RSSI	I	Received Signal Strength Indicator input
90	BUSY	I	Busy level input
91	VOX	I	VOX level input
92	QT/DQT_IN	I	QT/DQT input
93	TH_DET	I	Thermistor input
94	AVSS	-	GND
95	NC	-	NC
96	VREF	-	+5V
97	AVCC	-	+5V
98	NC	-	NC
99	MIC_MUTE	O	MIC mute
100	NC	-	NC

ManualsPlus.com

COMPONENTS DESCRIPTION

TX-RX UNIT (X57-6870-20)

Ref. No.	Use/Function	Operation/Condition
IC1	IC	PLL system
IC2	IC	VCO 1/2 Divider
IC101	IC	Comparator (APC)
IC201	IC	FM IF system
IC301	IC	Audio processor
IC302	IC	AF AMP
IC401	IC	Voltage regulator/ 5V
IC402	IC	Voltage regulator/ 5V
IC403	IC	Voltage detector / Reset
IC404	IC	Voltage detector / INT
IC405	IC	Microprocessor
IC406	IC	EEPROM
Q1	Transistor	Tripler
Q2	Transistor	PLL IC f_in AMP
Q3	FET	VCO / RX
Q4	FET	VCO / TX
Q5	Transistor	DC switch / TX VCO
Q6	FET	RF Buffer AMP
Q7	Transistor	DC switch / RX VCO
Q8	FET	Ripple filter
Q9	Transistor	RF AMP
Q102	Transistor	RF AMP
Q103	FET	TX Drive AMP
Q104	Transistor	APC switch
Q105	FET	APC switch
Q106	FET	TX Final AMP
Q107	Transistor	APC switch
Q108	FET	APC switch
Q109	Transistor	APC switch
Q202	Transistor	W/N switch / RX
Q203	Transistor	IF AMP
Q204	FET	Mixer
Q205	FET	RF AMP
Q301	Transistor	W/N switch / TX
Q302	Transistor	MIC AGC
Q303	Transistor	DC switch / SP Mute
Q304	Transistor	DC switch
Q305	Transistor	DC switch / SP Mute
Q306	FET	SP Mute switch
Q316	FET	SP Mute switch
Q401	Transistor	LED switch / Red
Q402	Transistor	LED switch / Green
Q403	FET	5T switch
Q404	FET	5R switch
Q405	Transistor	5C switch
Q407	FET	Beat Shift switch
Q408	FET	Beat Shift switch

Ref. No.	Use/Function	Operation/Condition
D1	Diode	Ripple Filter
D4	Variable capacitance diode	Frequency control / TX VCO
D5	Variable capacitance diode	Frequency control / RX VCO
D7	Variable capacitance diode	Frequency control / TX VCO
D9	Variable capacitance diode	Frequency control / RX VCO
D10	Variable capacitance diode	Modulator
D11	Diode	Current steering
D101	Diode	TX/RX RF switch
D102	Zener diode	APC protect
D103	Diode	ANT switch
D104	Diode	ANT switch
D105	Diode	ANT switch
D106	Diode	ANT switch
D202	Diode	TX/RX RF switch
D203	Variable capacitance diode	RF BPF tuning
D204	Variable capacitance diode	RF BPF tuning
D205	Variable capacitance diode	RF BPF tuning
D206	Variable capacitance diode	RF BPF tuning
D301	Diode	Detector
D302	Diode	Detector
D303	Diode	Isolation
D401	Diode	5V Protection
D402	Diode	Reverse Protection
D403	LED	LED/ Red
D404	LED	LED/ Green

ADDITIONAL PCB

Ref. No.	Use/Function	Operation/Condition
Q901	FET	W/N Switch/ TX

ManualsPlus.com

PARTS LIST

* New Parts. ⚠ indicates safety critical components.
Parts without **Parts No.** are not supplied.
Les articles non mentionnes dans le **Parts No.** ne sont pas fournis.
Teile ohne **Parts No.** werden nicht geliefert.

L: Scandinavia **K**: USA **P**: Canada
Y: PX (Far East, Hawaii) **T**: England **E**: Europe
Y: AAFES (Europe) **X**: Australia **M**: Other Areas

TK-2202/2206 (Y50-5890-XX)
TX-RX UNIT (X57-6870-20)

Ref. No.	Address	New parts	Parts No.	Description	Destination
TK-2202/2206					
1	1A	*	A02-3851-23	CABINET ASSY(16CH)	BM
1	1A	*	A02-3852-23	CABINET ASSY(8CH)	AK,AM
2	1A	*	A02-3858-13	CABINET	
3	3A	*	A10-4078-01	CHASSIS	
4	1B	*	A21-1644-13	DRESSING PANEL(16CH)	BM
4	1B	*	A21-1645-13	DRESSING PANEL(8CH)	AK,AM
6	2C,2E	*	B09-0680-03	CAP(SP/MIC) ACCESSORY	
7	2B	*	B11-1817-04	ILLUMINATION GUIDE	
8	1B	*	B43-1156-04	BADGE	
9	1C	*	B62-1762-00	INSTRUCTION MANUAL	AK,AM
10	1E	*	B62-1763-00	INSTRUCTION MANUAL	BM
11	1A	*	D10-0649-03	LEVER	
12	1A	*	D21-0863-04	SHAFT	
13	1A	*	D32-0441-03	STOPPER	
14	2A	*	E04-0451-05	RF COAXIAL RECEPTACLE(SMA)	
15	3B	*	E23-1253-04	TERMINAL(BATT-)	
16	2B		E37-0794-05	PROCESSED LEAD WIRE(SP+)	
17	2B		E37-0803-05	PROCESSED LEAD WIRE(SP-)	
18	3A	*	F20-3353-14	INSULATING SHEET(CHASSIS BATT+)	
19	2A	*	G01-4542-04	COIL SPRING(LEVER)	
20	1A	*	G01-4543-04	COIL SPRING(STOPPER)	
21	2B	*	G10-1330-04	FIBROUS SHEET(IC302:AUDIO IC)	
22	3A	*	G11-4283-04	RUBBER SHEET(Q106:FINAL FET)	
23	2A	*	G11-4313-04	SHEET(MIC ELEMENT)	
24	3B	*	G11-4318-04	SHEET	
25	3A	*	G11-4320-14	SHEET	
26	2B,3B	*	G11-4322-04	SHEET	
27	2A	*	G11-4323-04	SHEET	
29	3B	*	G13-2009-04	CUSHION(TERMINAL BATT-)	
30	3A	*	G13-2033-04	CUSHION(TERMINAL BATT-)	
31	3B	*	G13-2034-14	CUSHION(CHASSIS)	
32	2B	*	G13-2037-04	CUSHION(CHASSIS VOL/CH)	
33	3A	*	G13-2038-04	CUSHION(CHASSIS-CERAMIC FILTER)	
34	2A	*	G13-2039-04	CUSHION(PCB-CERAMIC FILTER)	
35	3A	*	G53-1604-03	PACKING(CHASSIS)	
36	3A	*	G53-1605-03	PACKING(TERMINAL BATT+)	
37	2B	*	G53-1606-03	PACKING(VOL/CH/LED)	
38	1B	*	G53-1607-03	PACKING(SP/MIC)	
39	2B	*	G53-1608-03	PACKING(SP)	
40	2A	*	G53-1609-14	PACKING(MIC ELEMENT)	
41	2B	*	G53-1610-04	PACKING(SMA)	
43	2C,2F	*	H12-3158-05	PACKING FIXTURE	
44	1D	*	H13-2109-03	CARTON BOARD	AK,AM
45	1C,1E		H25-0085-04	PROTECTION BAG (100/200/0.07)	
46	3D	*	H52-2017-02	ITEM CARTON CASE	AK,AM
47	3F	*	H52-2034-02	ITEM CARTON CASE	BM
48	2C,2F	*	J19-5472-03	HOLDER(SP/MIC) ACCESSORY	
49	2A	*	J19-5473-03	HOLDER ASSY(TERMINAL BATT+)	
50	2B	*	J21-8477-04	HARDWARE FIXTURE(VOL/CH)	
51	2B	*	J21-8478-04	HARDWARE FIXTURE(SP/MIC)	
52	2C,2F	*	J29-0713-05	BELT CLIP ACCESSORY	
54	2B	*	J82-0092-05	FPC	
56	1A	*	K29-9307-03	BUTTON KNOB(SIDE1/SIDE2)	
57	1A	*	K29-9308-03	BUTTON KNOB(PTT)	
58	1B	*	K29-9309-03	KNOB(VOL)	
59	1B	*	K29-9318-03	KNOB(CH)	
A	2B	*	N14-0808-04	CIRCULAR NUT(CH KNOB)	
B	2B	*	N14-0812-04	CIRCULAR NUT(VOL KNOB)	
C	2A,2B		N30-2604-46	PAN HEAD MACHINE SCREW(SMA)	
D	3A		N30-2606-46	PAN HEAD MACHINE SCREW(CHASSIS)	
E	2A,2B,3B		N83-2005-46	PAN HEAD TAPTITE SCREW(PCB)	
60	1C,2F	*	N99-2043-05	SCREW SET ACCESSORY	
61	2B	*	R31-0653-05	VARIABLE RESISTOR(POWER SW/VOL)	
62	2B	*	S60-0427-05	ROTARY SWITCH(16CH)	BM
62	2B	*	S60-0428-15	ROTARY SWITCH(8CH)	AK,AM
63	1B		T07-0369-05	SPEAKER	
64	1C		T90-1036-05	HELICAL ANTENNA ACCESSORY	AK,AM
65	2D	*	W08-0969-05	CHARGER ACCESSORY	AK,AM
66	1D	*	W08-0970-05	AC ADAPTER(AC120V) ACCESSORY	AK
66	1D	*	W08-0971-05	AC ADAPTER(AC230V) ACCESSORY	AM
TX-RX UNIT (X57-6870-20)					
D403			B30-2156-05	LED(RED)	
D404			B30-2157-05	LED(YELLOW)	
C1			CK73HB1H332K	CHIP C 3300PF K	
C2			CK73HB1C682K	CHIP C 6800PF K	
C3			CK73GB1A105K	CHIP C 1.0UF K	
C4			CK73HB1C103K	CHIP C 0.010UF K	
C5			CK73HB1H102K	CHIP C 1000PF K	
C6			CK73HB1A104K	CHIP C 0.10UF K	
C7 ,8			CC73HCH1H101J	CHIP C 100PF J	
C9			CC73HCH1H100D	CHIP C 10PF D	
C10			C92-0713-05	CHIP-TAN 10UF 6.3WV	
C11			CC73HCH1H101J	CHIP C 100PF J	
C12			CK73HB1H102K	CHIP C 1000PF K	
C13			CK73HB1A104K	CHIP C 0.10UF K	
C14			CK73HB1C103K	CHIP C 0.010UF K	
C15			CC73HCH1H100D	CHIP C 10PF D	
C16			CK73HB1H102K	CHIP C 1000PF K	
C17			CC73HCH1H470J	CHIP C 47PF J	
C18			CC73HCH1H180J	CHIP C 18PF J	
C19			CK73HB1A104K	CHIP C 0.10UF K	
C21			C92-0713-05	CHIP-TAN 10UF 6.3WV	
C22			C92-0502-05	CHIP-TAN 0.33UF 35WV	
C24			CK73HB1H102K	CHIP C 1000PF K	
C25			CC73HCH1H020B	CHIP C 2.0PF B	
C26			CC73HCH1H300J	CHIP C 30PF J	
C27			C92-0697-05	CHIP-TAN 3.3UF 16WV	
C29 ,30			CK73HB1H471K	CHIP C 470PF K	
C32			C92-0001-05	CHIP C 0.1UF 35WV	
C33 ,34			CK73HB1H102K	CHIP C 1000PF K	
C35			CC73HCH1H270J	CHIP C 27PF J	

AK : TK-2202 (K) **AM : TK-2202 (M)** **BM : TK-2206 (M)**

ManualsPlus.com

PARTS LIST

TX-RX UNIT (X57-6870-20)

Ref. No.	Address	New parts	Parts No.	Description			Destination
C38			CC73HCH1H060B	CHIP C	6.0PF	B	
C39			CK73GB1H332K	CHIP C	3300PF	K	
C40			CC73HCH1H040B	CHIP C	4.0PF	B	
C41			CK73GB1H682K	CHIP C	6800PF	K	
C42			CC73HCH1H060B	CHIP C	6.0PF	B	
C43			CC73HCH1H150J	CHIP C	15PF	J	
C44			CK73HB1H471K	CHIP C	470PF	K	
C45			CK73GB1A105K	CHIP C	1.0UF	K	
C47			CC73HCH1H101J	CHIP C	100PF	J	
C48			CK73HB1H471K	CHIP C	470PF	K	
C49			CC73HCH1H101J	CHIP C	100PF	J	
C50			CC73HCH1H100D	CHIP C	10PF	D	
C51			CK73HB1H102K	CHIP C	1000PF	K	
C52			CC73HCH1H181J	CHIP C	180PF	J	
C53			CC73HCH1H0R5B	CHIP C	0.5PF	B	
C54			CC73HCH1H040B	CHIP C	4.0PF	B	
C55			CC73HCH1H121J	CHIP C	120PF	J	
C57			CC73HCH1H1R5B	CHIP C	1.5PF	B	
C58			CC73HCH1H060B	CHIP C	6.0PF	B	
C59			CC73HCH1H1R5B	CHIP C	1.5PF	B	
C60			CC73HCH1H010B	CHIP C	1.0PF	B	
C61			CC73HCH1H040B	CHIP C	4.0PF	B	
C62			CC73HCH1H050B	CHIP C	5.0PF	B	
C63			CC73HCH1H101J	CHIP C	100PF	J	
C64			CC73HCH1H040B	CHIP C	4.0PF	B	
C65 -67			CC73HCH1H050B	CHIP C	5.0PF	B	
C68 -70			CK73HB1H471K	CHIP C	470PF	K	
C71 ,72			CK73HB1A104K	CHIP C	0.10UF	K	
C73 ,74			CC73HCH1H0R5B	CHIP C	0.5PF	B	
C75 ,76			CK73HB1H102K	CHIP C	1000PF	K	
C77			CK73HB1H471K	CHIP C	470PF	K	
C78			CC73HCH1H330J	CHIP C	33PF	J	
C79			C92-0713-05	CHIP-TAN	10UF	6.3WV	
C80			CK73HB1H471K	CHIP C	470PF	K	
C81			CC73HCH1H150J	CHIP C	15PF	J	
C82 -86			CK73HB1H102K	CHIP C	1000PF	K	
C87			CC73HCH1H100D	CHIP C	10PF	D	
C90			CK73HB1H102K	CHIP C	1000PF	K	
C101			CK73HB1H102K	CHIP C	1000PF	K	
C104			CC73GCH1H390J	CHIP C	39PF	J	
C105			CK73HB1H102K	CHIP C	1000PF	K	
C107			CK73HB1H102K	CHIP C	1000PF	K	
C108			CC73GCH1H390J	CHIP C	39PF	J	
C109			CK73GB1C104K	CHIP C	0.10UF	K	
C110,111			CK73HB1H102K	CHIP C	1000PF	K	
C115			CK73HB1H102K	CHIP C	1000PF	K	
C116			CC73GCH1H220J	CHIP C	22PF	J	
C117			CC73GCH1H100D	CHIP C	10PF	D	
C118			CC73GCH1H101J	CHIP C	100PF	J	
C119			CC73GCH1H270J	CHIP C	27PF	J	
C120			CK73GB1H102K	CHIP C	1000PF	K	
C121			CC73GCH1H100D	CHIP C	10PF	D	
C123			CK73GB1A105K	CHIP C	1.0UF	K	
C124,125			CK73HB1H102K	CHIP C	1000PF	K	
C126			C92-0565-05	CHIP-TAN	6.8UF	10WV	
C128			CK73HB1H102K	CHIP C	1000PF	K	
C130			CC73GCH1H100D	CHIP C	10PF	D	
C132			CK73HB1H102K	CHIP C	1000PF	K	
C133			CK73GB1H103K	CHIP C	0.010UF	K	
C134			CK73GB1C104K	CHIP C	0.10UF	K	

Ref. No.	Address	New parts	Parts No.	Description			Destination
C135			CK73GB1A105K	CHIP C	1.0UF	K	
C136			CC73GCH1H270J	CHIP C	27PF	J	
C137			CK73GB1H103K	CHIP C	0.010UF	K	
C138			CK73GB1H102K	CHIP C	1000PF	K	
C139			CC73GCH1H680J	CHIP C	68PF	J	
C140			CC73GCH1H101J	CHIP C	100PF	J	
C141			CC73GCH1H220J	CHIP C	22PF	J	
C142			CC73GCH1H150J	CHIP C	15PF	J	
C143			CC73GCH1H100D	CHIP C	10PF	D	
C144			CC73GCH1H820J	CHIP C	82PF	J	
C146			CK73GB1H102K	CHIP C	1000PF	K	
C147			CK73HB1H102K	CHIP C	1000PF	K	
C148			CK73GB1H102K	CHIP C	1000PF	K	
C149			CC73GCH1H220G	CHIP C	22PF	G	
C150			CC73GCH1H220J	CHIP C	22PF	J	
C151			CK73GB1H102K	CHIP C	1000PF	K	
C153			CC73GCH1H100C	CHIP C	10PF	C	
C154			CC73GCH1H100D	CHIP C	10PF	D	
C155			CC73GCH1H180J	CHIP C	18PF	J	
C156			CC73GCH1H120J	CHIP C	12PF	J	
C157			CC73GCH1H150J	CHIP C	15PF	J	
C158			CC73GCH1H220J	CHIP C	22PF	J	
C159			CC73GCH1H070D	CHIP C	7.0PF	D	
C160			CC73GCH1H330J	CHIP C	33PF	J	
C201			CK73GB1A224K	CHIP C	0.22UF	K	
C206			CK73HB1H102K	CHIP C	1000PF	K	
C207			CK73HB1H182K	CHIP C	1800PF	K	
C208			CK73HB1H471K	CHIP C	470PF	K	
C209			C92-0713-05	CHIP-TAN	10UF	6.3WV	
C210			CK73HB1H471K	CHIP C	470PF	K	
C211			CK73HB1C103K	CHIP C	0.010UF	K	
C213			CK73HB1A104K	CHIP C	0.10UF	K	
C214			CC73HCH1H680J	CHIP C	68PF	J	
C215			CK73HB1H102K	CHIP C	1000PF	K	
C216			CK73GB1C104K	CHIP C	0.10UF	K	
C217			CK73HB1A104K	CHIP C	0.10UF	K	
C218			CK73GB1C104K	CHIP C	0.10UF	K	
C219			CC73HCH1H330J	CHIP C	33PF	J	
C220			CK73HB1H102K	CHIP C	1000PF	K	
C221			CK73GB1C104K	CHIP C	0.10UF	K	
C222			CK73HB1H102K	CHIP C	1000PF	K	
C224,225			CK73HB1C103K	CHIP C	0.010UF	K	
C227			CK73HB1H102K	CHIP C	1000PF	K	
C228			CC73GCH1H100C	CHIP C	10PF	C	
C230			CC73HCH1H080B	CHIP C	8.0PF	B	
C231,232			CK73GB1H103K	CHIP C	0.010UF	K	
C233			CC73HCH1H020B	CHIP C	2.0PF	B	
C234			CK73HB1C103K	CHIP C	0.010UF	K	
C235			CC73HCH1H090B	CHIP C	9.0PF	B	
C236			CK73GB1H102K	CHIP C	1000PF	K	
C237			CC73HCH1H050B	CHIP C	5.0PF	B	
C238			CC73GCH1H120J	CHIP C	12PF	J	
C239			CC73HCH1H060B	CHIP C	6.0PF	B	
C241			CK73HB1H102K	CHIP C	1000PF	K	
C242			CK73GB1C104K	CHIP C	0.10UF	K	
C243			CK73HB1H102K	CHIP C	1000PF	K	
C244			CC73HCH1H040B	CHIP C	4.0PF	B	
C245			CK73HB1H471K	CHIP C	470PF	K	
C247			CC73GCH1H040B	CHIP C	4.0PF	B	
C248			CC73GCH1H270J	CHIP C	27PF	J	

AK : TK-2202 (K) **AM : TK-2202 (M)** **BM : TK-2206 (M)**

ManualsPlus.com

PARTS LIST

TX-RX UNIT (X57-6870-20)

Ref. No.	Address	New parts	Parts No.	Description	Destination
C249			CK73HB1H102K	CHIP C 1000PF K	
C250			CC73GCH1H040B	CHIP C 4.0PF B	
C251			C92-0714-05	CHIP-TAN 4.7UF 6.3WV	
C252			CK73HB1H102K	CHIP C 1000PF K	
C253			CC73GCH1H4R5B	CHIP C 4.5PF B	
C254			CC73GCH1H270J	CHIP C 27PF J	
C255			CC73GCH1H4R5B	CHIP C 4.5PF B	
C256			CK73HB1H102K	CHIP C 1000PF K	
C258			CK73HB1H102K	CHIP C 1000PF K	
C260			CK73HB1H102K	CHIP C 1000PF K	
C262			CK73HB1H102K	CHIP C 1000PF K	
C263			CC73GCH1H100C	CHIP C 10PF C	
C264			CC73GCH1H040B	CHIP C 4.0PF B	
C265			CC73GCH1H330J	CHIP C 33PF J	
C266			CK73HB1H102K	CHIP C 1000PF K	
C267,268			CC73GCH1H030B	CHIP C 3.0PF B	
C269			CC73GCH1H330J	CHIP C 33PF J	
C270			CC73GCH1H040B	CHIP C 4.0PF B	
C271			CC73GCH1H110J	CHIP C 11PF J	
C280			CK73HB1H102K	CHIP C 1000PF K	
C302			CK73HB1C103K	CHIP C 0.010UF K	
C304			CK73GB1A224K	CHIP C 0.22UF K	
C306			C92-0714-05	CHIP-TAN 4.7UF 6.3WV	
C307,308			CK73HB1A104K	CHIP C 0.10UF K	
C309			CC73GCH1H820J	CHIP C 82PF J	
C310			CK73HB1A683K	CHIP C 0.068UF K	
C311			CK73GB1A105K	CHIP C 1.0UF K	
C312			CC73GCH1H120J	CHIP C 12PF J	
C313			CC73GCH1H121J	CHIP C 120PF J	
C314			CK73HB1A104K	CHIP C 0.10UF K	
C315			CK73GB1A105K	CHIP C 1.0UF K	
C316			CK73GB1C104K	CHIP C 0.10UF K	
C317			CK73HB1A104K	CHIP C 0.10UF K	
C318			C92-0714-05	CHIP-TAN 4.7UF 6.3WV	
C319			CC73GCH1H271J	CHIP C 270PF J	
C320			CK73HB1C103K	CHIP C 0.010UF K	
C321			CK73GB1A105K	CHIP C 1.0UF K	
C322			CK73HB1C153K	CHIP C 0.015UF K	
C323			CC73GCH1H820J	CHIP C 82PF J	
C324			CC73HCH1H820J	CHIP C 82PF J	
C325			CK73HB1A104K	CHIP C 0.10UF K	
C326			CK73HB1H102K	CHIP C 1000PF K	
C327			CC73HCH1H101J	CHIP C 100PF J	
C328			CK73HB1H391K	CHIP C 390PF K	
C329,330			CK73GB1A105K	CHIP C 1.0UF K	
C331			CK73HB1A104K	CHIP C 0.10UF K	
C332			CK73HB1H471K	CHIP C 470PF K	
C333,334			CK73GB1C104K	CHIP C 0.10UF K	
C335			CC73GCH1H221J	CHIP C 220PF J	
C336			CK73FB1C474K	CHIP C 0.47UF K	
C338			CC73GCH1H101J	CHIP C 100PF J	
C339			C92-0560-05	CHIP-TAN 10UF 6.3WV	
C340			CK73GB1C104K	CHIP C 0.10UF K	
C341			CK73GB1C473K	CHIP C 0.047UF K	
C342			C92-0560-05	CHIP-TAN 10UF 6.3WV	
C343			CK73GB1C473K	CHIP C 0.047UF K	
C344			CC73GCH1H221J	CHIP C 220PF J	
C345			C92-0665-05	TANTAL 100UF 6.3WV	
C346			CK73GB1H102K	CHIP C 1000PF K	
C348			CK73HB1H471K	CHIP C 470PF K	

Ref. No.	Address	New parts	Parts No.	Description	Destination
C351,352			CK73HB1C103K	CHIP C 0.010UF K	
C354			CK73HB1A104K	CHIP C 0.10UF K	
C370			CK73HB1A104K	CHIP C 0.10UF K	
C401			CC73GCH1H471J	CHIP C 470PF J	
C402			CK73HB1H102K	CHIP C 1000PF K	
C403			CK73GB1C104K	CHIP C 0.10UF K	
C405			CC73GCH1H101J	CHIP C 100PF J	
C407			CK73HB1H102K	CHIP C 1000PF K	
C409,410			CK73GB1A105K	CHIP C 1.0UF K	
C411			CK73HB1H102K	CHIP C 1000PF K	
C415			CK73HB1H471K	CHIP C 470PF K	
C417			CK73GB1A105K	CHIP C 1.0UF K	
C418,419			CK73HB1H102K	CHIP C 1000PF K	
C421			CK73GB1A105K	CHIP C 1.0UF K	
C426,427			CK73GB1A105K	CHIP C 1.0UF K	
C428,429			CK73HB1H102K	CHIP C 1000PF K	
C430			CK73GB1H103K	CHIP C 0.010UF K	
C431			CK73HB1C103K	CHIP C 0.010UF K	
C432			CC73HCH1H050B	CHIP C 5.0PF B	
C433,434			CC73HCH1H030B	CHIP C 3.0PF B	
C435			CC73HCH1H050B	CHIP C 5.0PF B	
C440			CC73GCH1H1R5B	CHIP C 1.5PF B	
C443			CK73GB1A474K	CHIP C 0.47UF K	
TC1 ,2			C05-0384-05	CERAMIC TRIMMER CAP(10PF)	
CN201			E23-1081-05	TERMINAL	
CN401		*	E40-6362-05	FLAT CABLE CONNECTOR	
J301			E11-0457-05	PHONE JACK(2.5/3.5)	
F401			F53-0190-05	FUSE(2.5A)	
67	2A	*	J30-1282-04	SPACER(MIC ELEMENT)	
CD201			L79-1582-05	TUNING COIL	
CF201	2A		L72-0973-05	CERAMIC FILTER(450KHZ)	
L1			L40-4791-37	SMALL FIXED INDUCTOR(4.700UH)	
L3			L40-5681-86	SMALL FIXED INDUCTOR(0.56UH)	
L5			L40-5681-86	SMALL FIXED INDUCTOR(0.56UH)	
L6 ,7			L92-0138-05	FERRITE CHIP	
L8			L40-1875-92	SMALL FIXED INDUCTOR(18NH)	
L9			L40-3375-92	SMALL FIXED INDUCTOR(33NH)	
L10			L40-1885-92	SMALL FIXED INDUCTOR(180NH)	
L11			L40-1085-92	SMALL FIXED INDUCTOR(100NH)	
L12			L92-0138-05	FERRITE CHIP	
L13 ,14			L40-2285-92	SMALL FIXED INDUCTOR(220NH)	
L16			L40-3978-67	SMALL FIXED INDUCTOR(39NH)	
L17			L40-2778-67	SMALL FIXED INDUCTOR(27NH)	
L18 ,19			L41-2285-03	SMALL FIXED INDUCTOR	
L20 ,21			L40-3391-86	SMALL FIXED INDUCTOR(3.3UH)	
L22			L92-0138-05	FERRITE CHIP	
L23			L40-3975-92	SMALL FIXED INDUCTOR(39NH)	
L24			L92-0141-05	FERRITE CHIP	
L25			L40-8275-92	SMALL FIXED INDUCTOR(82NH)	
L50			L92-0138-05	FERRITE CHIP	
L102			L40-1085-92	SMALL FIXED INDUCTOR(100NH)	
L103			L92-0138-05	FERRITE CHIP	
L104			L40-2775-92	SMALL FIXED INDUCTOR(27NH)	
L105			L40-1585-54	SMALL FIXED INDUCTOR(150NH)	
L106			L92-0149-05	FERRITE CHIP	
L107			L40-2775-54	SMALL FIXED INDUCTOR(27NH)	
L108			L92-0149-05	FERRITE CHIP	
L109			L40-2295-85	SMALL FIXED INDUCTOR(2.2UH)	

AK : TK-2202 (K) AM : TK-2202 (M) BM : TK-2206 (M)

ManualsPlus.com

PARTS LIST

TX-RX UNIT (X57-6870-20)

Ref. No.	Address	New parts	Parts No.	Description	Destination
L110			L40-5675-92	SMALL FIXED INDUCTOR(56NH)	
L111			L40-1092-81	SMALL FIXED INDUCTOR	
L112			L34-4577-05	AIR-CORE COIL	
L113			L34-4563-05	AIR-CORE COIL	
L114,115			L34-4573-05	AIR-CORE COIL	
L116			L34-4576-05	AIR-CORE COIL	
L117			L34-4575-05	AIR-CORE COIL	
L118			L34-4567-05	AIR-CORE COIL	
L119			L34-4566-05	AIR-CORE COIL	
L201			L40-1091-37	SMALL FIXED INDUCTOR(1.000UH)	
L202			L40-3975-92	SMALL FIXED INDUCTOR(39NH)	
L203			L92-0138-05	FERRITE CHIP	
L204			L40-5685-85	SMALL FIXED INDUCTOR(0.56UH)	
L205			L40-6875-92	SMALL FIXED INDUCTOR(68NH)	
L206			L40-1885-92	SMALL FIXED INDUCTOR(180NH)	
L207			L40-1585-92	SMALL FIXED INDUCTOR(150NH)	
L209			L41-5678-14	SMALL FIXED INDUCTOR	
L210			L92-0138-05	FERRITE CHIP	
L211			L41-5678-14	SMALL FIXED INDUCTOR	
L213			L41-5678-14	SMALL FIXED INDUCTOR	
L214			L41-4778-14	SMALL FIXED INDUCTOR	
L301			L92-0140-05	FERRITE CHIP	
L302			L92-0149-05	FERRITE CHIP	
L401			L92-0149-05	FERRITE CHIP	
L402-404			L92-0138-05	FERRITE CHIP	
X1			L77-1931-05	TCXO(12.8MHZ)	
X2		*	L78-1411-05	RESONATOR(7.37MHZ)	
XF201			L71-0619-05	MCF(38.85MHZ)	
CP404			RK75HA1J473J	CHIP-COM 47K J 1/16W	
CP405			RK75HA1J102J	CHIP-COM 1.0K J 1/16W	
R1			RK73HB1J223J	CHIP R 22K J 1/16W	
R2			RK73HB1J103J	CHIP R 10K J 1/16W	
R3			RK73HB1J333J	CHIP R 33K J 1/16W	
R4			RK73HB1J563J	CHIP R 56K J 1/16W	
R5			RK73HB1J104J	CHIP R 100K J 1/16W	
R6			RK73HB1J823J	CHIP R 82K J 1/16W	
R7			RK73HB1J101J	CHIP R 100 J 1/16W	
R8 -11			R92-1368-05	CHIP R 0 OHM	
R12			RK73HB1J222J	CHIP R 2.2K J 1/16W	
R13			R92-1252-05	CHIP R 0 OHM J 1/16W	
R14			RK73HB1J334J	CHIP R 330K J 1/16W	
R15			RK73GB1J221J	CHIP R 220 J 1/16W	
R16			RK73GB1J561J	CHIP R 560 J 1/16W	
R17			RK73HB1J101J	CHIP R 100 J 1/16W	
R18			R92-1252-05	CHIP R 0 OHM J 1/16W	
R19			RK73GB1J152J	CHIP R 1.5K J 1/16W	
R20			RK73HB1J100J	CHIP R 10 J 1/16W	
R21			RK73GB1J681J	CHIP R 680 J 1/16W	
R22			R92-1252-05	CHIP R 0 OHM J 1/16W	
R23			RK73GB1J103J	CHIP R 10K J 1/16W	
R25			RK73HB1J223J	CHIP R 22K J 1/16W	
R26			RK73HB1J103J	CHIP R 10K J 1/16W	
R27			RK73HB1J220J	CHIP R 22 J 1/16W	
R30			RK73HB1J123J	CHIP R 12K J 1/16W	
R31			RK73HB1J564J	CHIP R 560K J 1/16W	
R32			RK73HB1J102J	CHIP R 1.0K J 1/16W	
R33			RK73HB1J154J	CHIP R 150K J 1/16W	
R34			RK73HB1J472J	CHIP R 4.7K J 1/16W	
R35 ,36			RK73HB1J274J	CHIP R 270K J 1/16W	

Ref. No.	Address	New parts	Parts No.	Description	Destination
R37			RK73HB1J101J	CHIP R 100 J 1/16W	
R38			RK73HB1J181J	CHIP R 180 J 1/16W	
R39			RK73HB1J151J	CHIP R 150 J 1/16W	
R40			RK73HB1J101J	CHIP R 100 J 1/16W	
R41			RK73HB1J154J	CHIP R 150K J 1/16W	
R42			RK73HB1J472J	CHIP R 4.7K J 1/16W	
R43			RK73HB1J101J	CHIP R 100 J 1/16W	
R44			RK73HB1J102J	CHIP R 1.0K J 1/16W	
R45 ,46			RK73HB1J332J	CHIP R 3.3K J 1/16W	
R47			RK73HB1J470J	CHIP R 47 J 1/16W	
R48			RK73HB1J331J	CHIP R 330 J 1/16W	
R49			RK73HB1J222J	CHIP R 2.2K J 1/16W	
R50			RK73HB1J472J	CHIP R 4.7K J 1/16W	
R51			RK73HB1J100J	CHIP R 10 J 1/16W	
R101			RK73HB1J123J	CHIP R 12K J 1/16W	
R103			R92-1252-05	CHIP R 0 OHM J 1/16W	
R107			RK73GB1J561J	CHIP R 560 J 1/16W	
R108			RK73GB1J152J	CHIP R 1.5K J 1/16W	
R109			RK73GB1J150J	CHIP R 15 J 1/16W	
R110,111			RK73GB1J331J	CHIP R 330 J 1/16W	
R112			RK73GB1J180J	CHIP R 18 J 1/16W	
R113			RK73GB1J331J	CHIP R 330 J 1/16W	
R114			RK73GB1J473J	CHIP R 47K J 1/16W	
R115			RK73GB1J103J	CHIP R 10K J 1/16W	
R116			RK73GB1J150J	CHIP R 15 J 1/16W	
R117			RK73GB1J683J	CHIP R 68K J 1/16W	
R119			RK73GB1J331J	CHIP R 330 J 1/16W	
R120			R92-1252-05	CHIP R 0 OHM J 1/16W	
R121			RK73GB1J561J	CHIP R 560 J 1/16W	
R122			RK73GB1J473J	CHIP R 47K J 1/16W	
R123			RK73GB1J820J	CHIP R 82 J 1/16W	
R124			RK73GB1J123J	CHIP R 12K J 1/16W	
R126			RK73GB1J222J	CHIP R 2.2K J 1/16W	
R127-129			RK73EB2ER39K	CHIP R 0.39 K 1/4W	
R130-135			RK73GH1J154D	CHIP R 150K D 1/16W	
R136,137			RK73GB1J271J	CHIP R 270 J 1/16W	
R138			RK73GB1J105J	CHIP R 1.0M J 1/16W	
R139			RK73GB1J473J	CHIP R 47K J 1/16W	
R140			RK73GB1J563J	CHIP R 56K J 1/16W	
R141			RK73GB1J104J	CHIP R 100K J 1/16W	
R142			R92-1252-05	CHIP R 0 OHM J 1/16W	
R143			RK73GB1J104J	CHIP R 100K J 1/16W	
R203			RK73HB1J184J	CHIP R 180K J 1/16W	
R206			RK73GB1J100J	CHIP R 10 J 1/16W	
R207			RK73HB1J472J	CHIP R 4.7K J 1/16W	
R208			RK73HB1J823J	CHIP R 82K J 1/16W	
R209			RK73HB1J272J	CHIP R 2.7K J 1/16W	
R210,211			RK73HB1J332J	CHIP R 3.3K J 1/16W	
R212			RK73HB1J823J	CHIP R 82K J 1/16W	
R213			RK73HB1J392J	CHIP R 3.9K J 1/16W	
R215			RK73HB1J101J	CHIP R 100 J 1/16W	
R216			RK73HB1J124J	CHIP R 120K J 1/16W	
R217			RK73HB1J472J	CHIP R 4.7K J 1/16W	
R218			RK73HB1J561J	CHIP R 560 J 1/16W	
R219,220			RK73GB1J561J	CHIP R 560 J 1/16W	
R221			RK73GB1J102J	CHIP R 1.0K J 1/16W	
R222			RK73GB1J221J	CHIP R 220 J 1/16W	
R223-226			RK73HB1J823J	CHIP R 82K J 1/16W	
R227			R92-1252-05	CHIP R 0 OHM J 1/16W	
R228,229			RK73HB1J105J	CHIP R 1.0M J 1/16W	

AK : TK-2202 (K) **AM : TK-2202 (M)** **BM : TK-2206 (M)**

ManualsPlus.com

PARTS LIST

TX-RX UNIT (X57-6870-20)

Ref. No.	Address	New parts	Parts No.	Description	Destination
R230			RK73GB1J222J	CHIP R 2.2K J 1/16W	
R231			RK73GB1J470J	CHIP R 47 J 1/16W	
R233			RK73GB1J221J	CHIP R 220 J 1/16W	
R234			RK73GB1J104J	CHIP R 100K J 1/16W	
R237			RK73GB1J184J	CHIP R 180K J 1/16W	
R238			RK73GB1J104J	CHIP R 100K J 1/16W	
R239			RK73GB1J470J	CHIP R 47 J 1/16W	
R240			R92-1252-05	CHIP R 0 OHM J 1/16W	
R241,242			RK73HB1J105J	CHIP R 1.0M J 1/16W	
R243			R92-0670-05	CHIP R 0 OHM	
R291			R92-1252-05	CHIP R 0 OHM J 1/16W	
R301			RK73HB1J473J	CHIP R 47K J 1/16W	
R304			RK73HB1J564J	CHIP R 560K J 1/16W	
R305			RK73HB1J104J	CHIP R 100K J 1/16W	
R306			RK73HB1J102J	CHIP R 1.0K J 1/16W	
R307,308			R92-1368-05	CHIP R 0 OHM	
R310			RK73GB1J394J	CHIP R 390K J 1/16W	
R311			RK73HB1J123J	CHIP R 12K J 1/16W	
R312			RK73GB1J334J	CHIP R 330K J 1/16W	
R313			RK73GB1J104J	CHIP R 100K J 1/16W	
R314			RK73GB1J103J	CHIP R 10K J 1/16W	
R315			RK73GB1J334J	CHIP R 330K J 1/16W	
R316			RK73GB1J124J	CHIP R 120K J 1/16W	
R317			RK73GB1J474J	CHIP R 470K J 1/16W	
R318			RK73GB1J122J	CHIP R 1.2K J 1/16W	
R319			RK73HB1J563J	CHIP R 56K J 1/16W	
R320			RK73HB1J332J	CHIP R 3.3K J 1/16W	
R321			RK73HB1J224J	CHIP R 220K J 1/16W	
R322			RK73HB1J184J	CHIP R 180K J 1/16W	
R323			RK73HB1J563J	CHIP R 56K J 1/16W	
R324,325			RK73GB1J104J	CHIP R 100K J 1/16W	
R326			R92-1252-05	CHIP R 0 OHM J 1/16W	
R327			RK73GB1J184J	CHIP R 180K J 1/16W	
R328			RK73GB1J103J	CHIP R 10K J 1/16W	
R329			RK73GB1J823J	CHIP R 82K J 1/16W	
R330			RK73HB1J332J	CHIP R 3.3K J 1/16W	
R331			RK73GB1J393J	CHIP R 39K J 1/16W	
R332			RK73GB1J153J	CHIP R 15K J 1/16W	
R334			RK73GB1J473J	CHIP R 47K J 1/16W	
R335			RK73GB1J222J	CHIP R 2.2K J 1/16W	
R336			RK73GB1J102J	CHIP R 1.0K J 1/16W	
R337			RK73GB1J101J	CHIP R 100 J 1/16W	
R338			RK73GB1J222J	CHIP R 2.2K J 1/16W	
R339			RK73GB1J471J	CHIP R 470 J 1/16W	
R340			RK73GB1J182J	CHIP R 1.8K J 1/16W	
R341			RK73GB1J103J	CHIP R 10K J 1/16W	
R342			RK73GB1J100J	CHIP R 10 J 1/16W	
R343			RK73GB1J474J	CHIP R 470K J 1/16W	
R344			RK73GB1J102J	CHIP R 1.0K J 1/16W	
R345,346			RK73GB1J101J	CHIP R 100 J 1/16W	
R347			RK73GB1J104J	CHIP R 100K J 1/16W	
R348			RK73GB1J563J	CHIP R 56K J 1/16W	
R349			RK73GB1J333J	CHIP R 33K J 1/16W	
R350			R92-1368-05	CHIP R 0 OHM	
R354,355			RK73HB1J103J	CHIP R 10K J 1/16W	
R357			R92-1368-05	CHIP R 0 OHM	
R360			R92-1368-05	CHIP R 0 OHM	
R365			RK73HB1J473J	CHIP R 47K J 1/16W	
R403			RK73GB1J101J	CHIP R 100 J 1/16W	
R404			RK73HH1J474D	CHIP R 470K D 1/16W	

Ref. No.	Address	New parts	Parts No.	Description	Destination
R405			RK73GB1J334J	CHIP R 330K J 1/16W	
R406			RK73HH1J474D	CHIP R 470K D 1/16W	
R407			RK73HB1J334J	CHIP R 330K J 1/16W	
R408-412			RK73HB1J473J	CHIP R 47K J 1/16W	
R413,414			RK73GB1J331J	CHIP R 330 J 1/16W	
R415,416			RK73GB1J473J	CHIP R 47K J 1/16W	
R417-420			RK73HB1J473J	CHIP R 47K J 1/16W	
R421,422			RK73HB1J102J	CHIP R 1.0K J 1/16W	
R423			R92-1368-05	CHIP R 0 OHM	
R424,425			RK73HB1J473J	CHIP R 47K J 1/16W	
R426			R92-1368-05	CHIP R 0 OHM	
R435			RK73HB1J473J	CHIP R 47K J 1/16W	
R436			R92-1252-05	CHIP R 0 OHM J 1/16W	
R437,438			RK73HB1J473J	CHIP R 47K J 1/16W	
R445,446			R92-1252-05	CHIP R 0 OHM J 1/16W	
R447			RK73HB1J472J	CHIP R 4.7K J 1/16W	
VR1			R12-7491-05	TRIMMING POT.(68K)	
S401-403			S70-0414-05	TACT SWITCH	
MIC301			T91-0543-05	MIC ELEMENT	
D1			MA2S111	DIODE	
D4 ,5			1SV325	VARIABLE CAPACITANCE DIODE	
D7			1SV325	VARIABLE CAPACITANCE DIODE	
D9			1SV325	VARIABLE CAPACITANCE DIODE	
D10			1SV278	VARIABLE CAPACITANCE DIODE	
D11			MA2S111	DIODE	
D101			HSC277	DIODE	
D102			HZU5CLL	ZENER DIODE	
D103-106			HVC131	DIODE	
D202			HSC277	DIODE	
D203-206			1SV305	VARIABLE CAPACITANCE DIODE	
D301,302			RB706F-40	DIODE	
D303			DAN222	DIODE	
D401			RB521S-30	DIODE	
D402			1SR154-400	DIODE	
IC1			MB15A02	MOS IC	
IC2			UPB1509GV	BI-POLAR IC	
IC101			TA75W01FU	MOS IC	
IC201			TA31136FN	MOS IC	
IC301			AQUA	MOS IC	
IC302			TA7368F	MOS IC	
IC401,402			XC6204B502MR	MOS IC	
IC403		*	BD4840FVE	MOS IC	
IC404		*	BD4845FVE	MOS IC	
IC405		*	30622MAA-B89GP	MPU	
IC406		*	BR24L08F-W	ROM IC	
Q1			KTC4082	TRANSISTOR	
Q2			2SC5108(Y)	TRANSISTOR	
Q3 ,4			2SK508NV(K52)	FET	
Q5			DTA143TE	DIGITAL TRANSISTOR	
Q6			2SC5108(Y)	TRANSISTOR	
Q7			DTA143TE	DIGITAL TRANSISTOR	
Q8			2SC4617(S)	TRANSISTOR	
Q9			2SC5108(Y)	TRANSISTOR	
Q102			2SC4926YD	TRANSISTOR	
Q103			2SK2596	FET	
Q104			DTC114EE	DIGITAL TRANSISTOR	
Q105			2SK879(Y)	FET	

AK : TK-2202 (K) AM : TK-2202 (M) BM : TK-2206 (M)

ManualsPlus.com

PARTS LIST

TX-RX UNIT (X57-6870-20)
ADDITIONAL PCB

Ref. No.	Address	New parts	Parts No.	Description	Destination
Q106			2SK2595	FET	
Q107			DTC114EE	DIGITAL TRANSISTOR	
Q108			2SK1824	FET	
Q109			DTA144EE	DIGITAL TRANSISTOR	
Q202			DTA144EE	DIGITAL TRANSISTOR	
Q203			2SC4649(N,P)	TRANSISTOR	
Q204,205			3SK318	FET	
Q301			DTA114EE	DIGITAL TRANSISTOR	
Q302			2SC4919	TRANSISTOR	
Q303			DTC144EE	DIGITAL TRANSISTOR	
Q304			2SA1362(GR)	TRANSISTOR	
Q305			DTC144EE	DIGITAL TRANSISTOR	
Q306			CPH3413	FET	
Q316			CPH3413	FET	
Q401,402			DTC114EE	DIGITAL TRANSISTOR	
Q403,404			CPH3317	FET	
Q405			DTA123JE	DIGITAL TRANSISTOR	
Q407,408			2SK1830	FET	
TH101			157-104-65001	THERMISTOR	
TH203			157-104-65001	THERMISTOR	
ADDITIONAL PCB					
C901,902			CK73GB1A105K	CHIP C 1.0UF K	
R901,902			RK73GB1J472J	CHIP R 4.7K J 1/16W	
Q901			2SK1824	FET	

Ref. No.	Address	New parts	Parts No.	Description	Destination

AK : TK-2202 (K) AM : TK-2202 (M) BM : TK-2206 (M)

ManualsPlus.com

EXPLODED VIEW

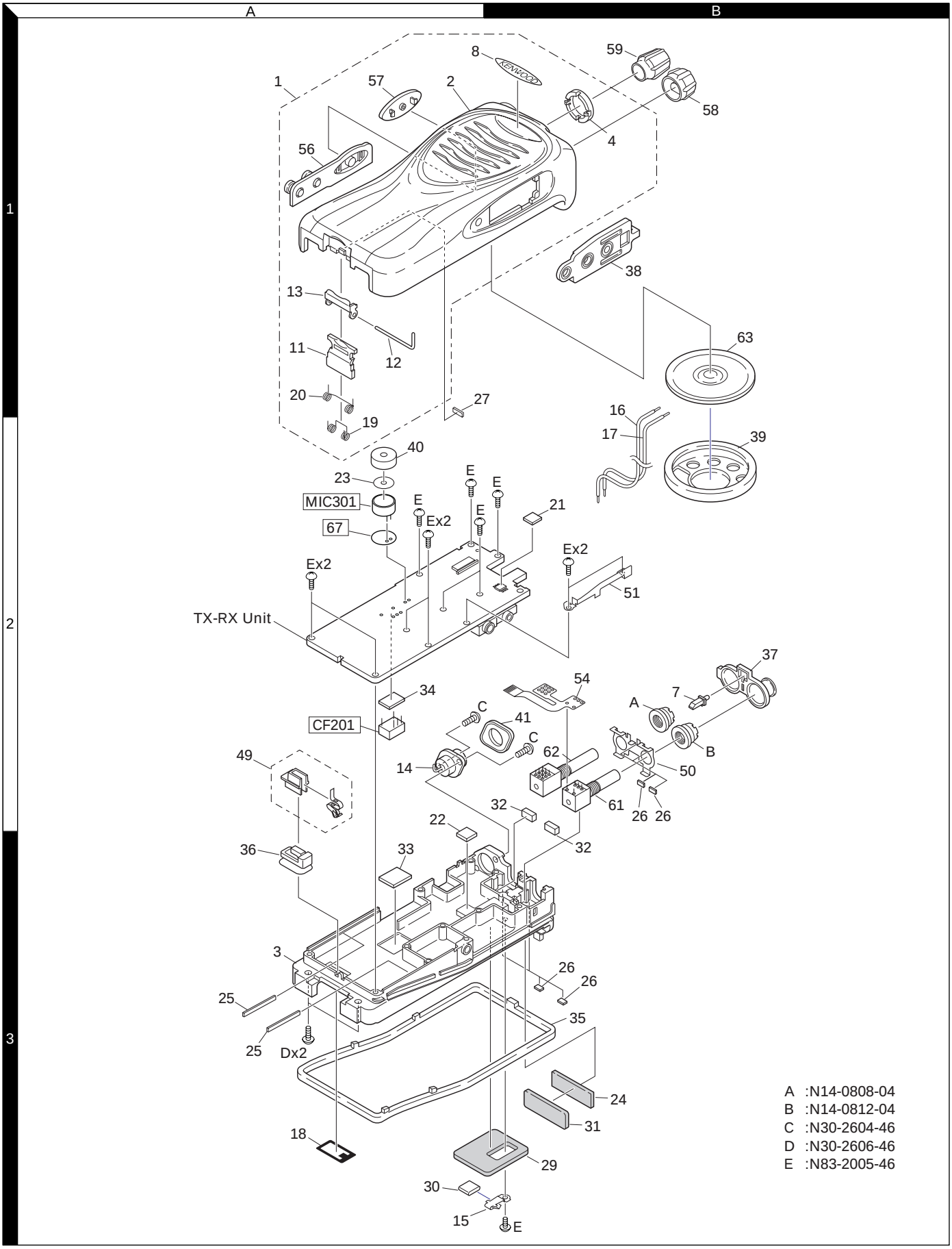

 Parts with the exploded numbers larger than 700 are not supplied.

ManualsPlus.com

PACKING (TK-2202)

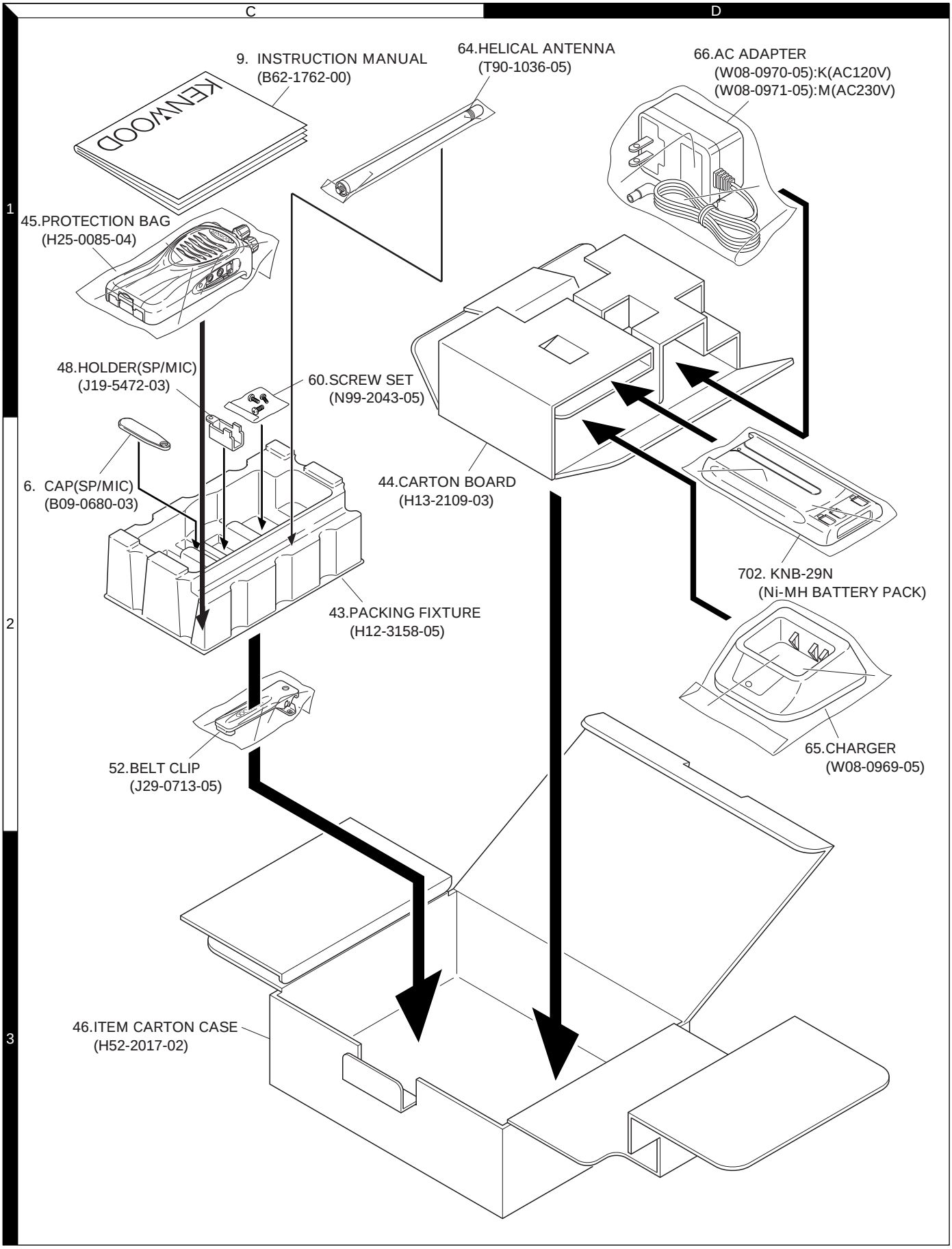

Parts with the exploded numbers larger than 700 are not supplied.

ManualsPlus.com

PACKING (TK-2206)

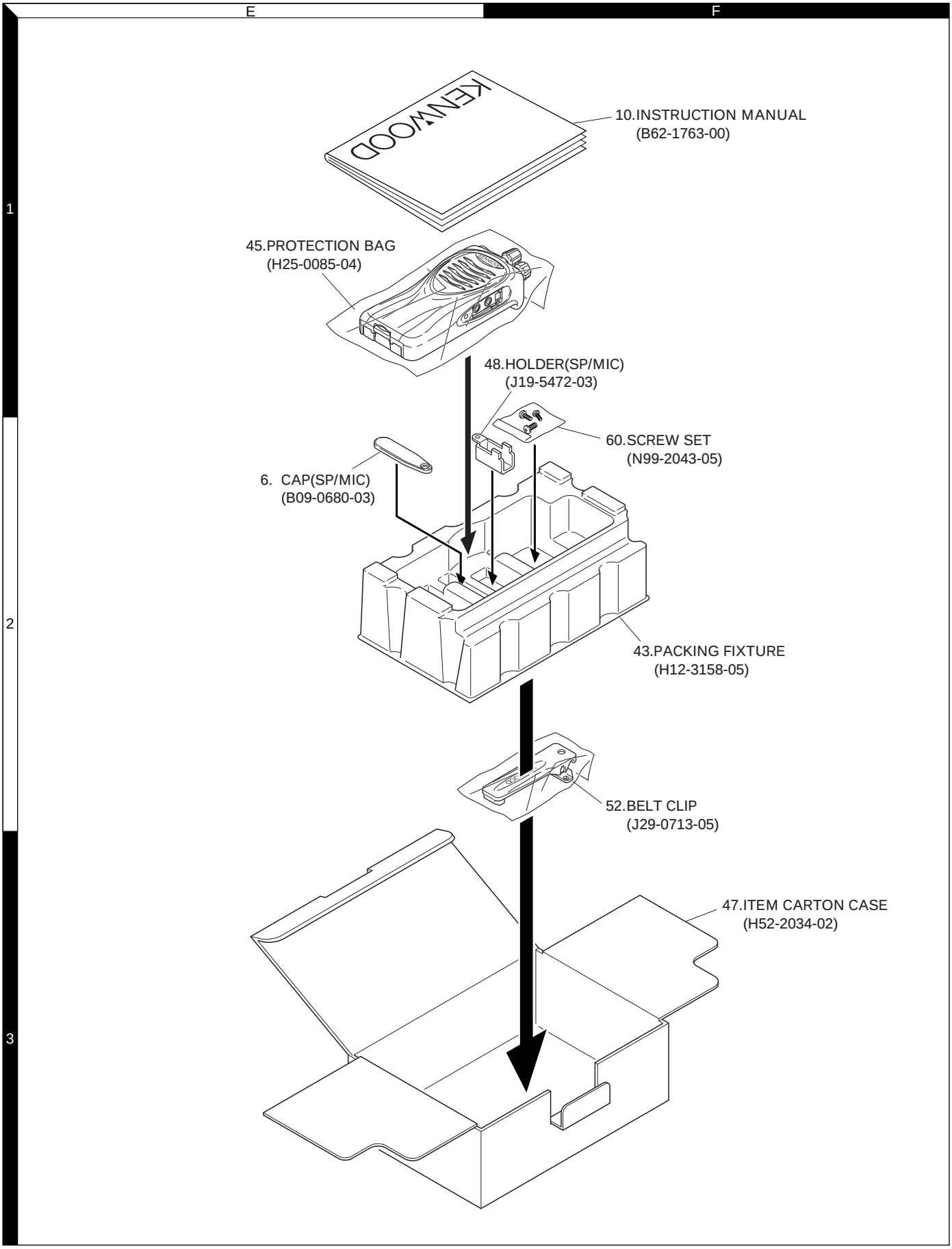

 Parts with the exploded numbers larger than 700 are not supplied.

ManualsPlus.com

ADJUSTMENT

Test Equipment Required for Alignment

Test Equipment	Major Specifications	
1. Standard Signal Generator (SSG)	Frequency Range Modulation Output	136 to 174MHz. Frequency modulation and external modulation. -127dBm/0.1µV to greater than -47dBm/1mV
2. Power Meter	Input Impedance Operation Frequency Measurement Range	50Ω. 136 to 174MHz. Vicinity of 10W
3. Deviation Meter	Frequency Range	136 to 174MHz.
4. Digital Volt Meter (DVM)	Measuring Range Input Impedance	10mV to 10V DC High input impedance for minimum circuit loading.
5. Oscilloscope		DC through 30MHz.
6. High Sensitivity Frequency Counter	Frequency Range Frequency Stability	10Hz to 1000MHz. 0.2ppm or less.
7. Ammeter		5A.
8. AF Volt Meter (AF VTVM)	Frequency Range Voltage Range	50Hz to 10kHz. 1mV to 10V.
9. Audio Generator (AG)	Frequency Range Output	50Hz to 5kHz or more. 0 to 1V.
10. Distortion Meter	Capability Input Level	3% or less at 1kHz. 50mV to 10Vrms.
11. Spectrum Analyzer	Measuring Range	DC to 1GHz or more
12. Tracking Generator	Center frequency Output Voltage	50kHz to 600MHz 100mV or more
13. 8Ω Dummy Load		Approx. 8Ω, 3W.
14. Regulated Power Supply		5V to 10V, approx. 3A Useful if ammeter equipped.

■ The following parts are required for adjustment

1. Antenna connector adapter

The antenna connector of this radio uses an SMA terminal.

Use an antenna connector adapter [SMA(f) – BNC(f) or SMA(f) – N(f)] for adjustment. (The adapter is not provided as an option, so buy a commercially-available one.)

2. Repair Jig (Chassis)

Use jig (part No.: A10-4086-03) for repairing the TK-2202/2206. Place the TX-RX unit on the jig and fit it with screws.

The jig facilitates the voltage check and protects the final amplifier FET when the voltage on the flow side of the TX-RX unit is checked during repairs.

3. Battery Jig (W05-1011-00)

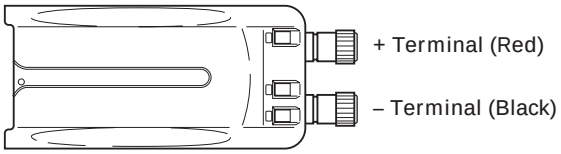

Connect the power cable properly between the battery jig installed in the transceiver and the power supply, and be sure output voltage and the power supply polarity prior to switching the power supply ON, otherwise over voltage and reverse connection may damage the transceiver, or the power supply or both.

Note: When using the battery jig, you must measure the voltage at the terminals of the battery jig. Otherwise, a slight voltage drop may occur within the power cable, between the power supply and the battery jig, especially while the transceiver transmits.

SCHEMATIC DIAGRAM

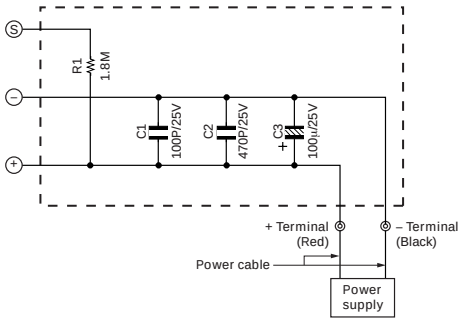

ManualsPlus.com

ADJUSTMENT

Adjustment points TX-RX unit (X57-687)
Component side view

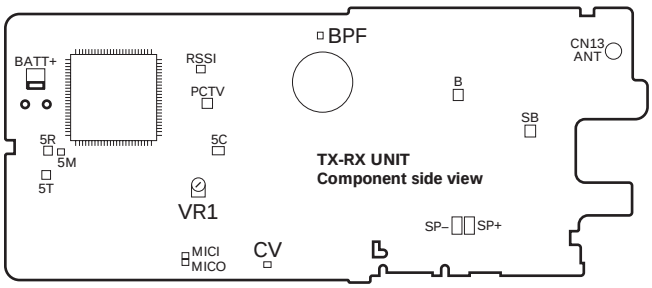

VR1 : Frequency adjustment
BPF : Band-pass wave form test point
CV : Lock voltage adjustment terminal

Foil Side View

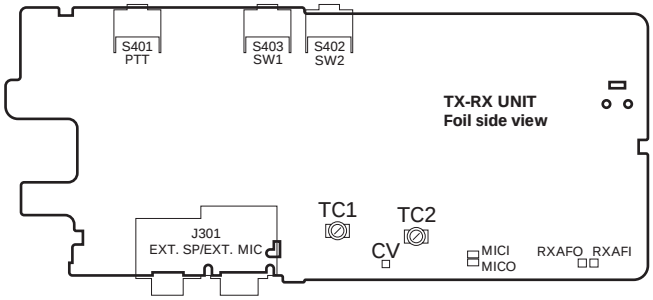

TC1 : Transmit lock voltage adjustment
TC2 : Receive lock voltage adjustment
CV : Lock voltage adjustment terminal

Fig. 1 Adjustment points

■ Frequency and signalling

The set has been adjusted for the frequencies shown in the following table. When required. re-adjust them following the adjustment procedure to obtain the frequencies you want in actual operation.

Frequency (MHz)

Channel No.	RX Frequency	TX Frequency
1	155.050	155.100
2	136.050	136.100
3	173.950	173.900
4	155.000	155.000
5	155.200	155.200
6	155.400	155.400
7~16	——	——

Signalling

Signalling No.	RX	TX
1	None	None
2	None	100Hz Square Wave
3	QT 67.0Hz	QT 67.0Hz
4	QT 151.4Hz	QT 151.4Hz
5	QT 250.3Hz	QT 250.3Hz
6	DQT D023N	DQT D023N
7	DQT D754I	DQT D754I
8	DTMF 159D	DTMF 159D
9	None	DTMF tone 9

- **Preparations for tuning the transceiver**

Before attempting to tune the transceiver, connect the unit to a suitable power supply.

Whenever the transmitter is tuned, the unit must be connected to a suitable dummy load (i.e. power meter).

The speaker output connector must be terminated with a 8Ω dummy load and connected to an AC voltmeter and an audio distortion meter or a SINAD measurement meter at all times during tuning.

Adjustment Frequency

TEST CH	RX	TX
Center	155.050MHz	155.000MHz
Low	136.050MHz	136.000MHz
High	173.950MHz	174.000MHz
Low’	145.550MHz	145.600MHz
High’	164.550MHz	164.600MHz

ManualsPlus.com

ADJUSTMENT

Common Section

Item	Condition	Measurement		Adjustment		Specifications/ Remark
		Test equipment	Terminal	Parts	Method	
1.Setting	1) BATT terminal votage:7.5V 2) SSG standard modulation [Wide] MOD:1kHz,DEV:3kHz [Narrow] MOD:1kHz,DEV:1.5kHz					
2.VCO lock voltage RX	1) CH:High	Power meter DVM	ANT CV	TC2	4.0V	±0.1V
	2) CH:Low				Check	0.6V or more
3.VCO lock voltage TX	3) CH:High PTT:ON			TC1	4.2V	±0.1V
	4) CH:Low PTT:ON				Check	0.6V or more

Transmitter Section

Item	Condition	Measurement		Adjustment		Specifications/ Remark
		Test equipment	Terminal	Parts	Method	
1.Frequency Adjust	1) CH:High 2) PTT:ON	Frequency counter	ANT	VR1	173.900 MHz	±50Hz
2.High power Adjust	TEST CH: Low Low' Center High' High (5 points) BATT terminal voltage:7.5V PTT:ON	Power meter Ammeter		Programming Software:KPG-87D		5.0W ±0.1W 1.9 A or less
3.Low power Adjust	TEST CH: Low Low' Center High' High (5 points) BATT terminal voltage:7.5V PTT:ON					1.0W ±0.1W 0.9 A or less
4.Max deviation Adjust [Wide]	TEST CH: Center Low High (3 points) AG:1kHz/150mV Deviation meter filter LPF:15kHz HPF:OFF PTT:ON	Power meter Deviation meter Oscilloscope AG AF VTVM	ANT SP/MIC connector		4.2kHz (According to the lager +,–)	±50Hz
[Narrow]	TEST CH:Center PTT:ON				2.2kHz (According to the lager +,–)	±50Hz
5.VOX 1 Writing	TEST CH:Center AG:1KHz/45mV					

ManualsPlus.com

ADJUSTMENT

Item	Condition	Measurement		Adjustment		Specifications/ Remark
		Test equipment	Terminal	Parts	Method	
6. VOX 10 Writing	TEST CH:Center AG:1kHz/3.0mV	Power meter Deviation meter Oscilloscope AG AF VTVM	ANT SP/MIC connector ANT	Programming Software:KPG-87D		
7. DQT Balance Adjust [Wide]	TEST CH: Center Low High (3 points) LPF:3kHz HPF:OFF PTT:ON			Programming Software:KPG-87D	Make the demodulation wave into square waves	
[Narrow]	TEST CH:Center PTT:ON					
8. QT Deviation Adjust [Wide]	TEST CH: Center Low High (3 points) LPF:3kHz HPF:OFF PTT:ON				0.75kHz	±40Hz
[Narrow]	TEST CH: Center PTT:ON				0.35kHz	±40Hz
9. DQT Deviation Adjust [Wide]	TEST CH: Center Low High (3 points) LPF:3kHz HPF:OFF PTT:ON				0.75kHz	±40Hz
[Narrow]	TEST CH:Center PTT:ON				0.35kHz	±40Hz
10. DTMF Deviation Adjust [Wide]	TEST CH:Center LPF:15kHz HPF:OFF PTT:ON				3.0kHz	±100Hz
[Narrow]	TEST CH:Center PTT:ON				1.5kHz	±100Hz
11. MSK Deviation Adjust [Wide]	TEST CH: Center Low High (3 points) LPF:15kHz HPF:OFF PTT:ON				3.0kHz	±100Hz
[Narrow]	TEST CH:Center PTT:ON				1.5kHz	±100Hz

ManualsPlus.com

ADJUSTMENT

Receiver Section

Item	Condition	Measurement		Adjustment		Specifications/ Remark
		Test equipment	Terminal	Parts	Method	
1.BPF Wave Adjust	(1)Center frequency Spectrum analyzer setting Center-f : 155MHz Span : 50MHz RBW : 300kHz VBW : 10kHz ATT : 5dB (2)High-edge frequency Spectrum analyzer setting Center-f : 174MHz (3)Low-edge frequency Spectrum analyzer setting Center-f : 136MHz	Spectrum analyzer	ANT BPF	Programming Software: KPG-87D	Adjust the waveform as shown to the right.	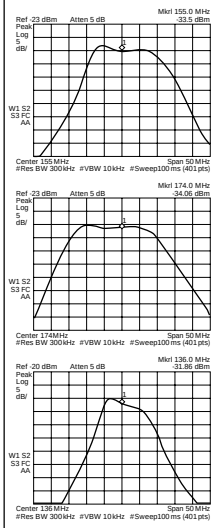
2.Sensitivity check [Wide]	TEST CH: Low Center High SSG otuput:–117 dBm(0.3μV) SSG MOD:3.0kHz	SSG DVM Oscilloscope AF VTVM	ANT		Check	12dB SINAD or more
[Narrow]	TEST CH: Center SSG otuput:–115 dBm(0.4μV) SSG MOD:1.5kHz					
3.SQL1 (Threshold) writing [Wide]	TEST CH: Center Low High SSG otuput:–123 dBm(0.16μV) SSG MOD:3.0kHz			Programming Software: KPG-87D	Write	Squelch open
[Narrow]	TEST CH: Center SSG otuput:–122 dBm(0.18μV) SSG MOD:1.5kHz					
4.SQL9 (Tight) writing [Wide]	TEST CH: Center Low High SSG otuput:–117 dBm(0.3μV) SSG MOD:3.0kHz					
[Narrow]	TEST CH:Center SSG otuput:–116 dBm(0.35μV) SSG MOD:1.5kHz					
5.BATT Detection Writing	BATT terminal voltage:5.9V	DVM	ANT BATT terminal		Write	BATT terminal voltage:5.9V

TK-2202/2206 PC BOARD

ManualsPlus.com

TX-RX UNIT (X57-6870-20) Component side view (J72-0912-09)

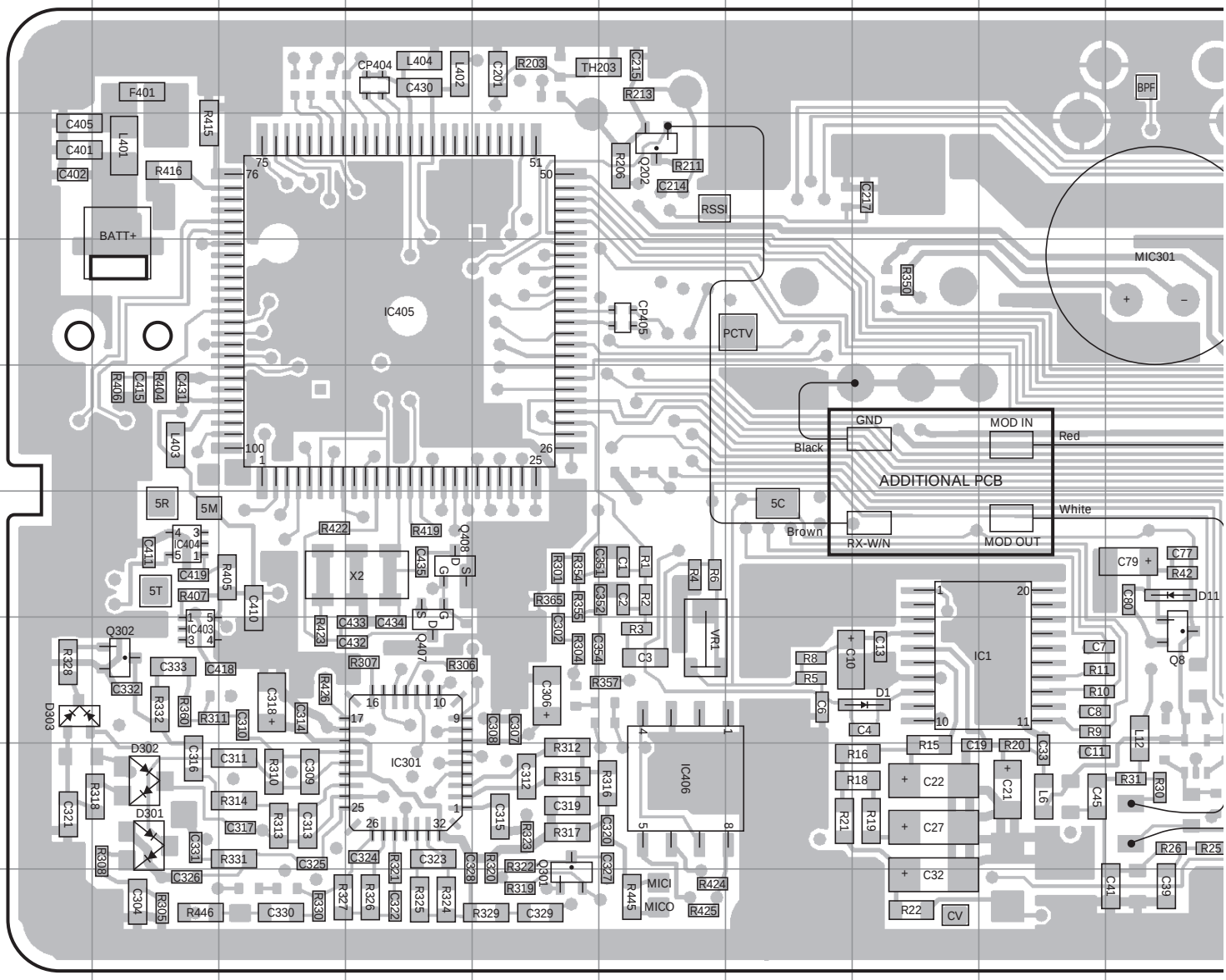

Ref. No.	Address	Ref. No.	Address	Ref. No.	Address	Ref. No.	Address
IC1	8I	Q104	5L	Q304	7P	D11	7J
IC101	4M	Q105	4K	Q305	8O	D102	4M
IC301	9D	Q107	4L	Q306	9P	D301	9B
IC302	8P	Q108	4L	Q316	9O	D302	9B
IC403	8B	Q109	5L	Q401	8R	D303	8A
IC404	7B	Q202	4F	Q402	8R	D403	8R
IC405	5D	Q301	10E	Q407	8D	D404	8R
IC406	9F	Q302	8B	Q408	7D		
Q8	8J	Q303	7P	D1	8H		

ADDITIONAL PCB

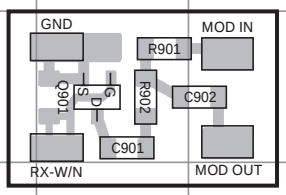

ManualsPlus.com

TX-RX UNIT (X57-6870-20) Component side view (J72-0912-09)

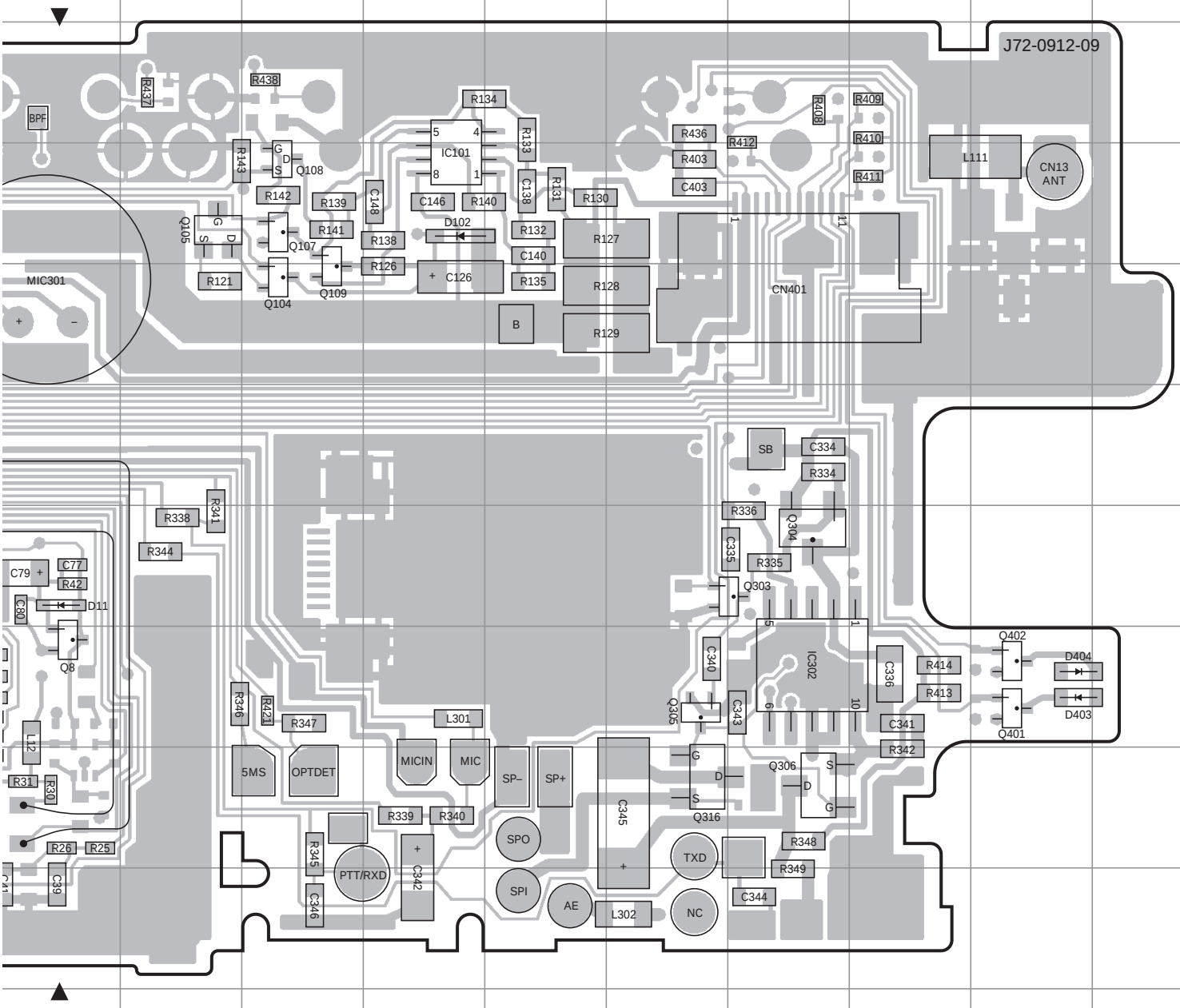

Component side

Layer 1	
Layer 2	
Layer 3	
Layer 4	

Foil side

TK-2202/2206 PC BOARD

ManualsPlus.com

TX-RX UNIT (X57-6870-20) Foil side view (J72-0912-09)

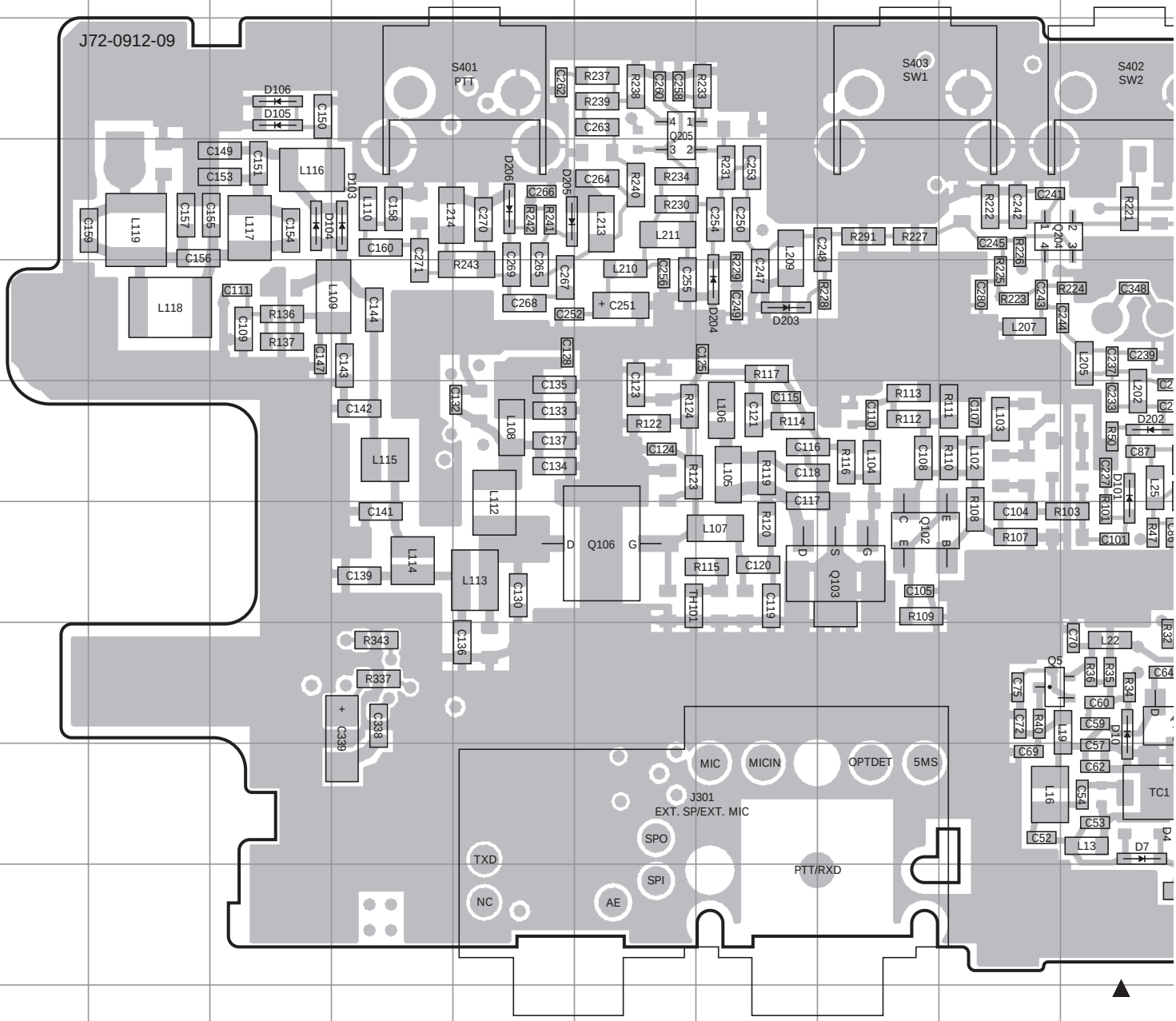

Ref. No.	Address	Ref. No.	Address	Ref. No.	Address	Ref. No.	Address	Ref. No.	Address
IC2	6L	Q5	8I	Q204	4I	D9	10L	D203	5G
IC201	5N	Q6	8K	Q205	3F	D10	8J	D204	5G
IC401	9R	Q7	9L	Q403	8R	D101	6J	D205	4E
IC402	8R	Q9	6K	Q404	7R	D103	4D	D206	4E
Q1	7O	Q102	7H	Q405	9R	D104	4C	D401	7R
Q2	8L	Q103	7H	D4	9J	D105	3C	D402	4R
Q3	9M	Q106	7F	D5	10L	D106	3C		
Q4	8J	Q203	4N	D7	9J	D202	6J		

ManualsPlus.com

TX-RX UNIT (X57-6870-20) Foil side view (J72-0912-09)

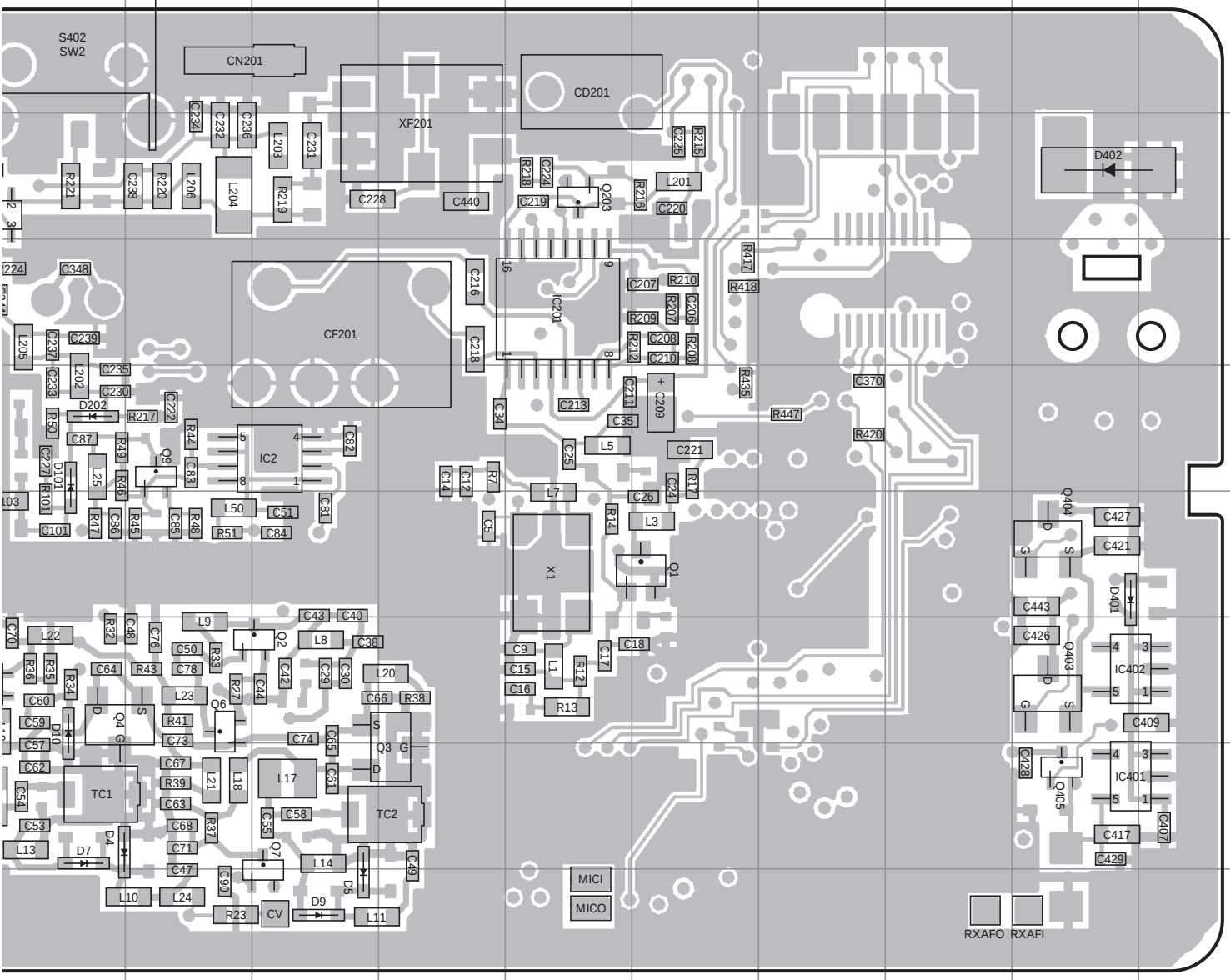

Component side

Layer 1

Layer 2

Layer 3

Layer 4

Foil side

ManualsPlus.com

TK-2202/2206 PC BOARD

PC BOARD TK-2202/2206

TX-RX UNIT (X57-6870-20) Component side view (J72-0912-09)

TX-RX UNIT (X57-6870-20) Component side view (J72-0912-09)

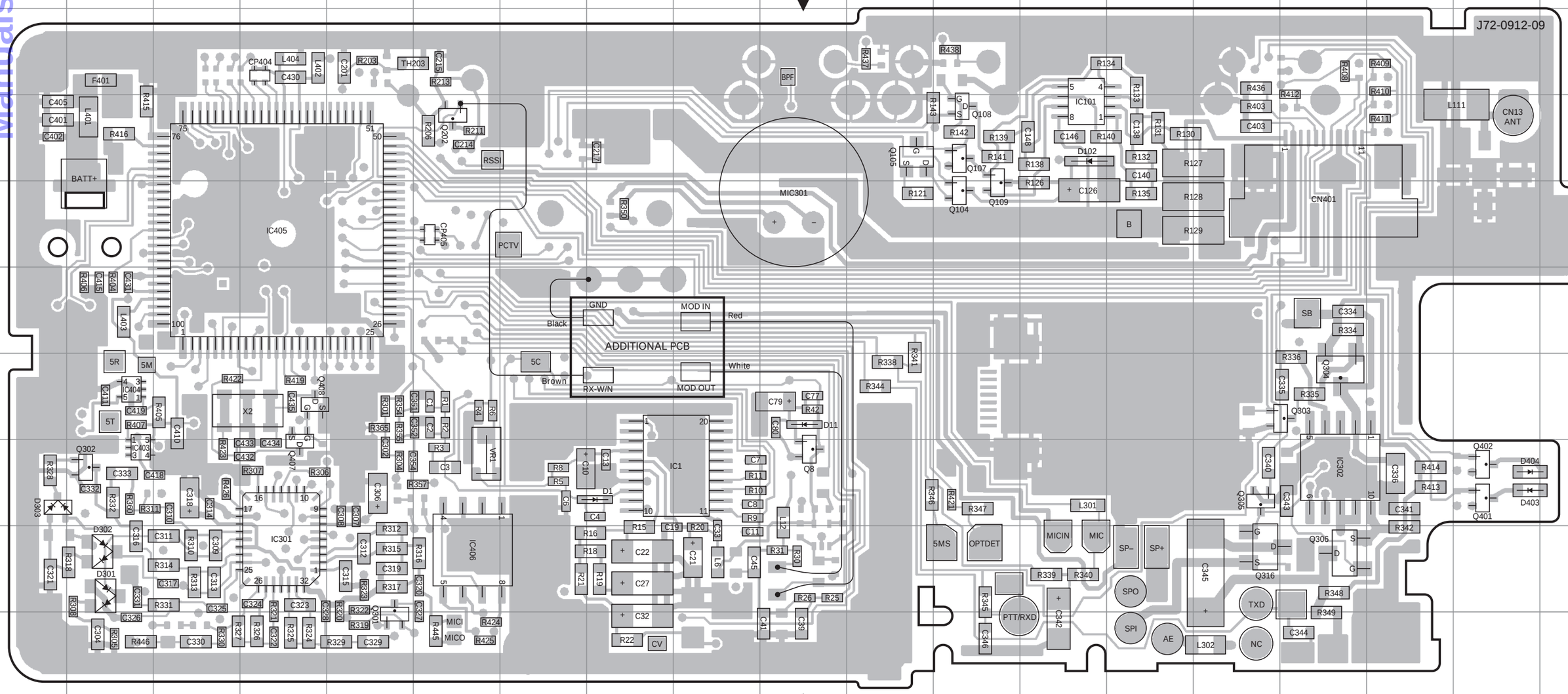

Ref. No.	Address	Ref. No.	Address	Ref. No.	Address	Ref. No.	Address
IC1	8I	Q104	5L	Q304	7P	D11	7J
IC101	4M	Q105	4K	Q305	8O	D102	4M
IC301	9D	Q107	4L	Q306	9P	D301	9B
IC302	8P	Q108	4L	Q316	9O	D302	9B
IC403	8B	Q109	5L	Q401	8R	D303	8A
IC404	7B	Q202	4F	Q402	8R	D403	8R
IC405	5D	Q301	10E	Q407	8D	D404	8R
IC406	9F	Q302	8B	Q408	7D		
Q8	8J	Q303	7P	D1	8H		

ADDITIONAL PCB

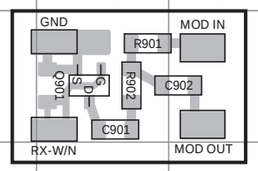

Component side
Layer 1
Layer 2
Layer 3
Layer 4
Foil side

ManualsPlus.com

TK-2202/2206 PC BOARD

PC BOARD TK-2202/2206

TX-RX UNIT (X57-6870-20) Foil side view (J72-0912-09)

TX-RX UNIT (X57-6870-20) Foil side view (J72-0912-09)

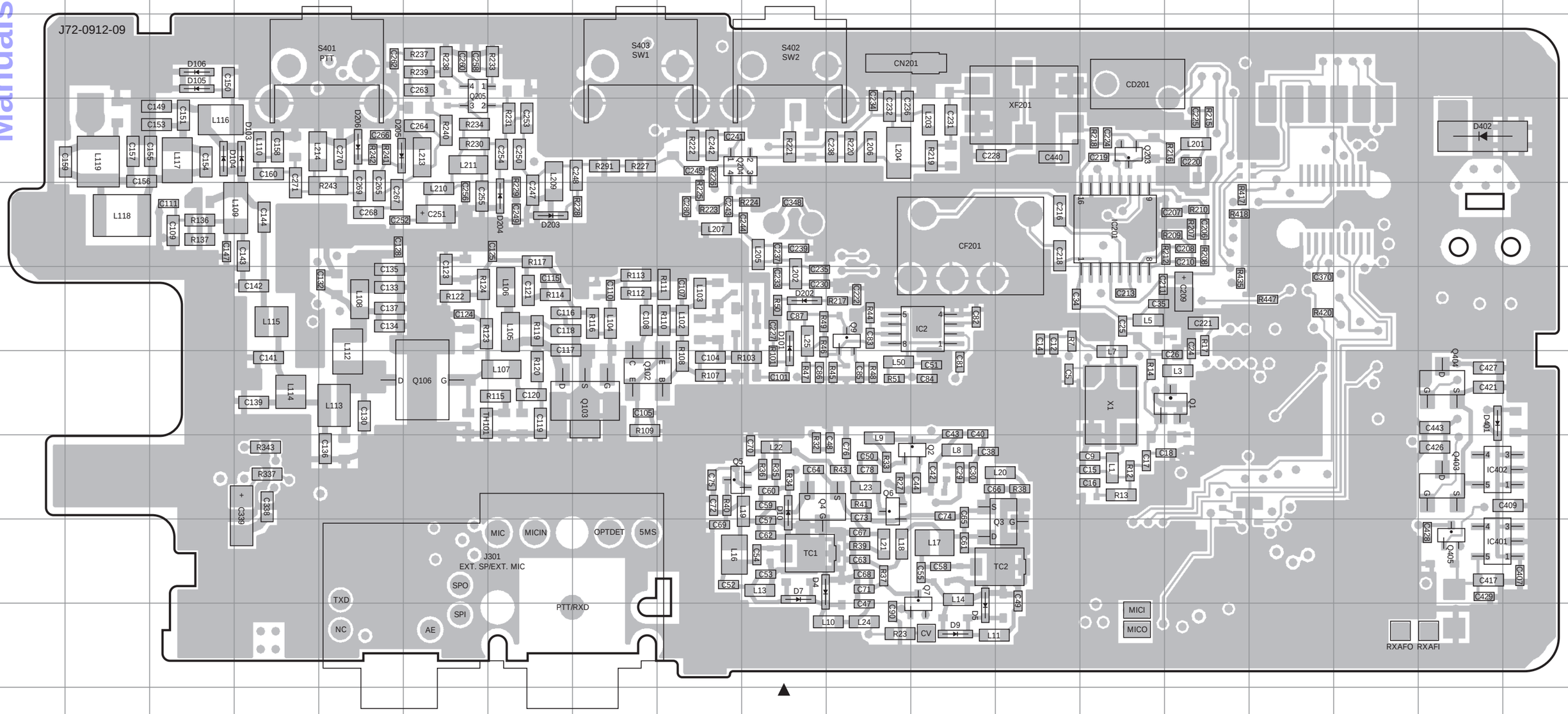

Ref. No.	Address	Ref. No.	Address	Ref. No.	Address	Ref. No.	Address	Ref. No.	Address
IC2	6L	Q5	8I	Q204	4I	D9	10L	D203	5G
IC201	5N	Q6	8K	Q205	3F	D10	8J	D204	5G
IC401	9R	Q7	9L	Q403	8R	D101	6J	D205	4E
IC402	8R	Q9	6K	Q404	7R	D103	4D	D206	4E
Q1	7O	Q102	7H	Q405	9R	D104	4C	D401	7R
Q2	8L	Q103	7H	D4	9J	D105	3C	D402	4R
Q3	9M	Q106	7F	D5	10L	D106	3C		
Q4	8J	Q203	4N	D7	9J	D202	6J		

Component side
Layer 1
Layer 2
Layer 3
Layer 4
Foil side

ManualsPlus.com

TK-2202/2206 SCHEMATIC DIAGRAM

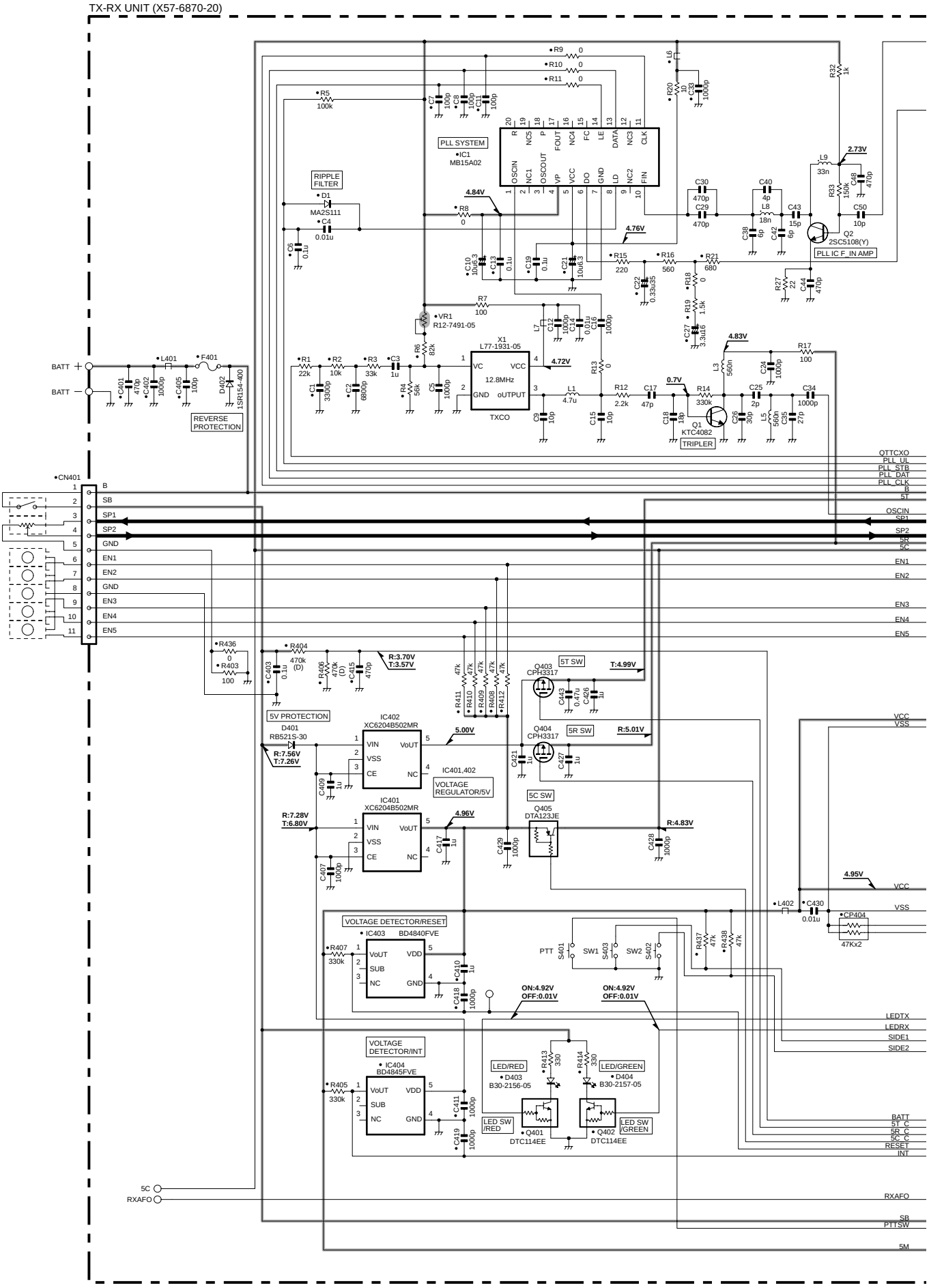

ManualsPlus.com

SCHEMATIC DIAGRAM TK-2202/2206

TX-RX UNIT (X57-6870-20)

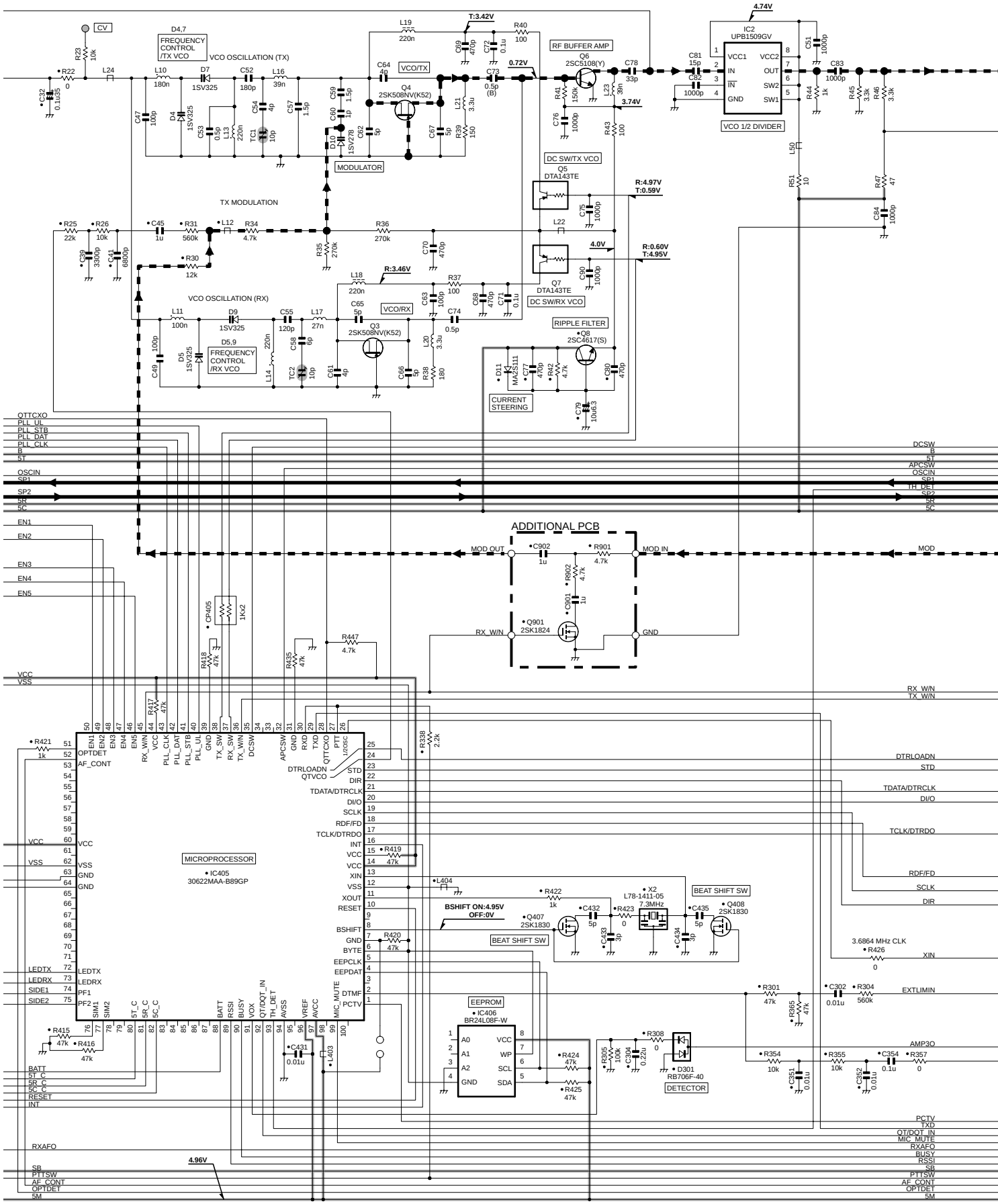

ManualsPlus.com

TK-2202/2206 SCHEMATIC DIAGRAM

TX-RX UNIT (X57-6870-20)

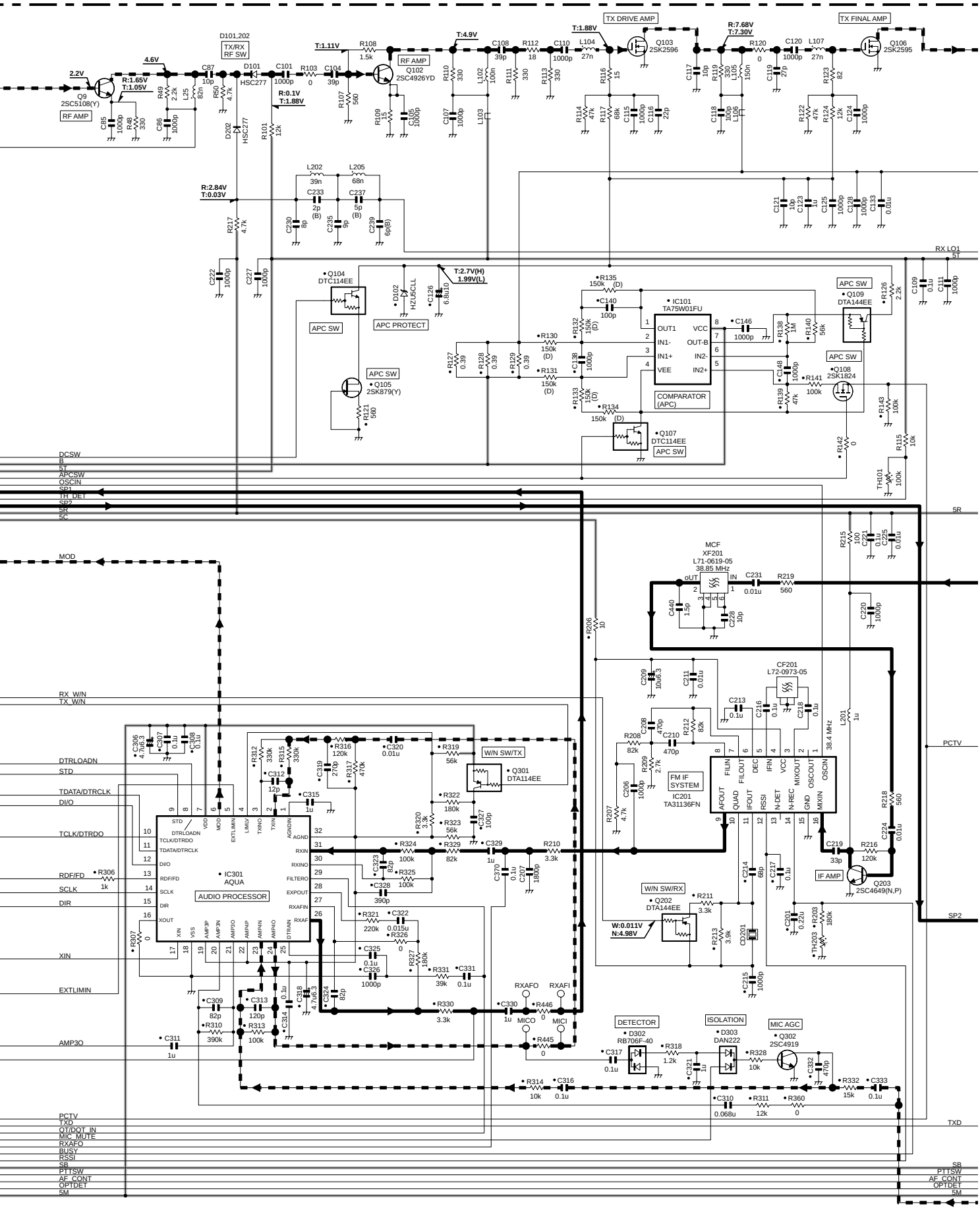

ManualsPlus.com

SCHEMATIC DIAGRAM TK-2202/2206

TX-RX UNIT (X57-6870-20)

Note : The components marked with a dot (●) are parts of layer1.

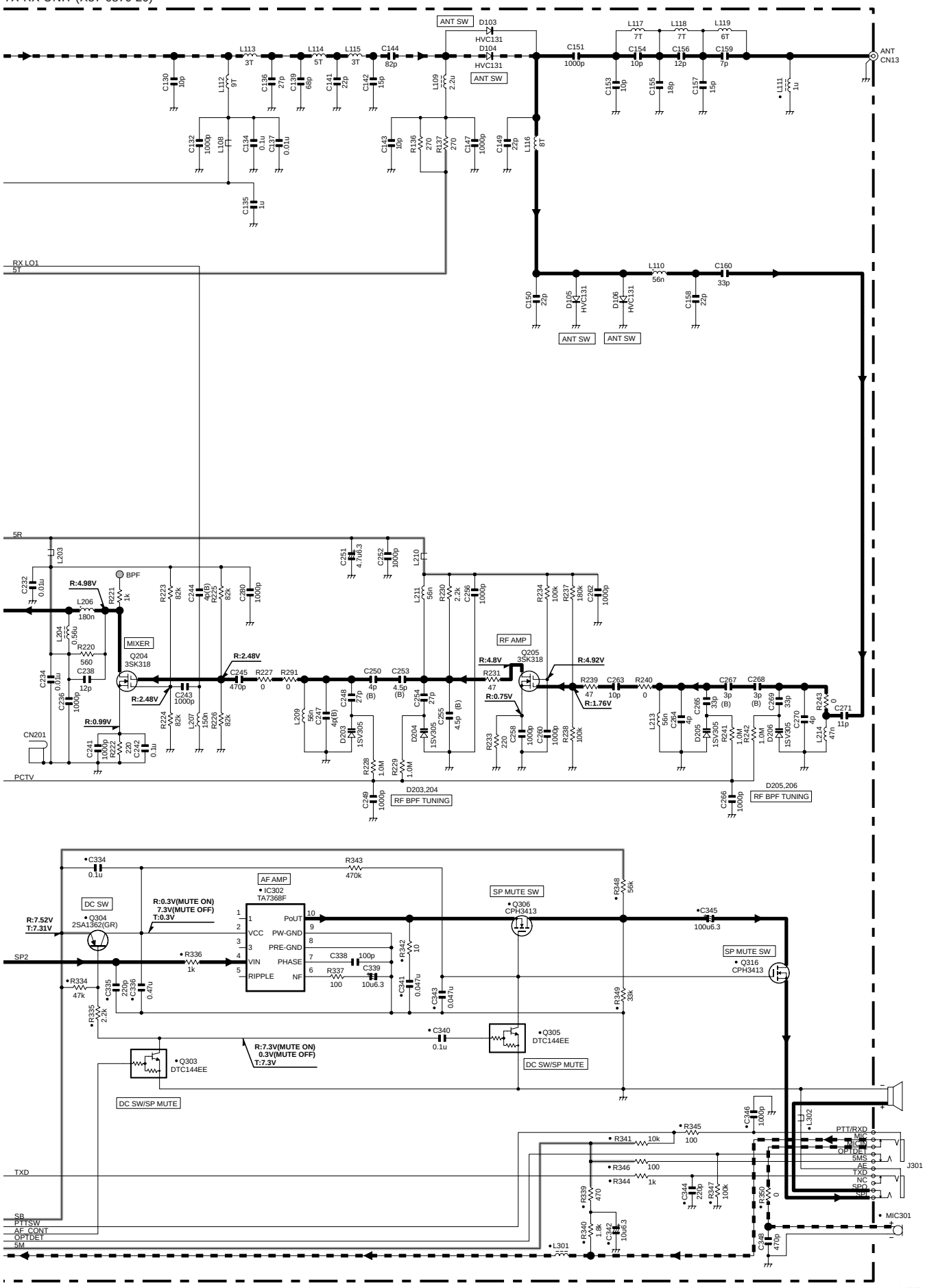

ManualsPlus.com

TK-2202/2206 SCHEMATIC DIAGRAM

TX-RX UNIT (X57-6870-20)

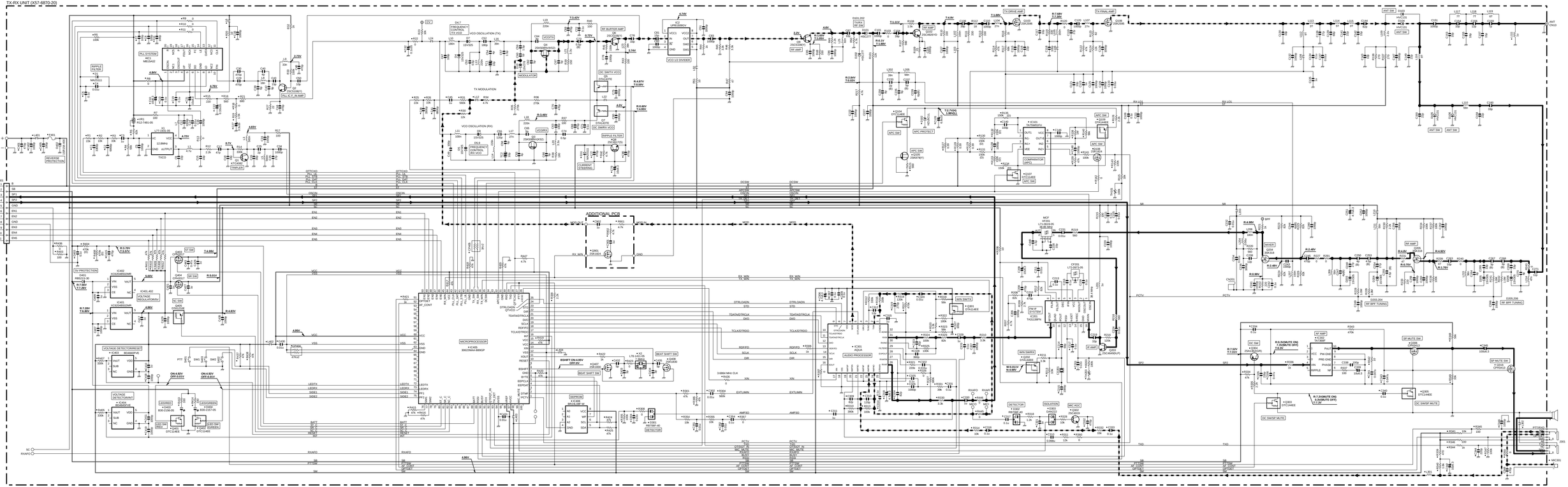

ManualsPlus.com

BLOCK DIAGRAM

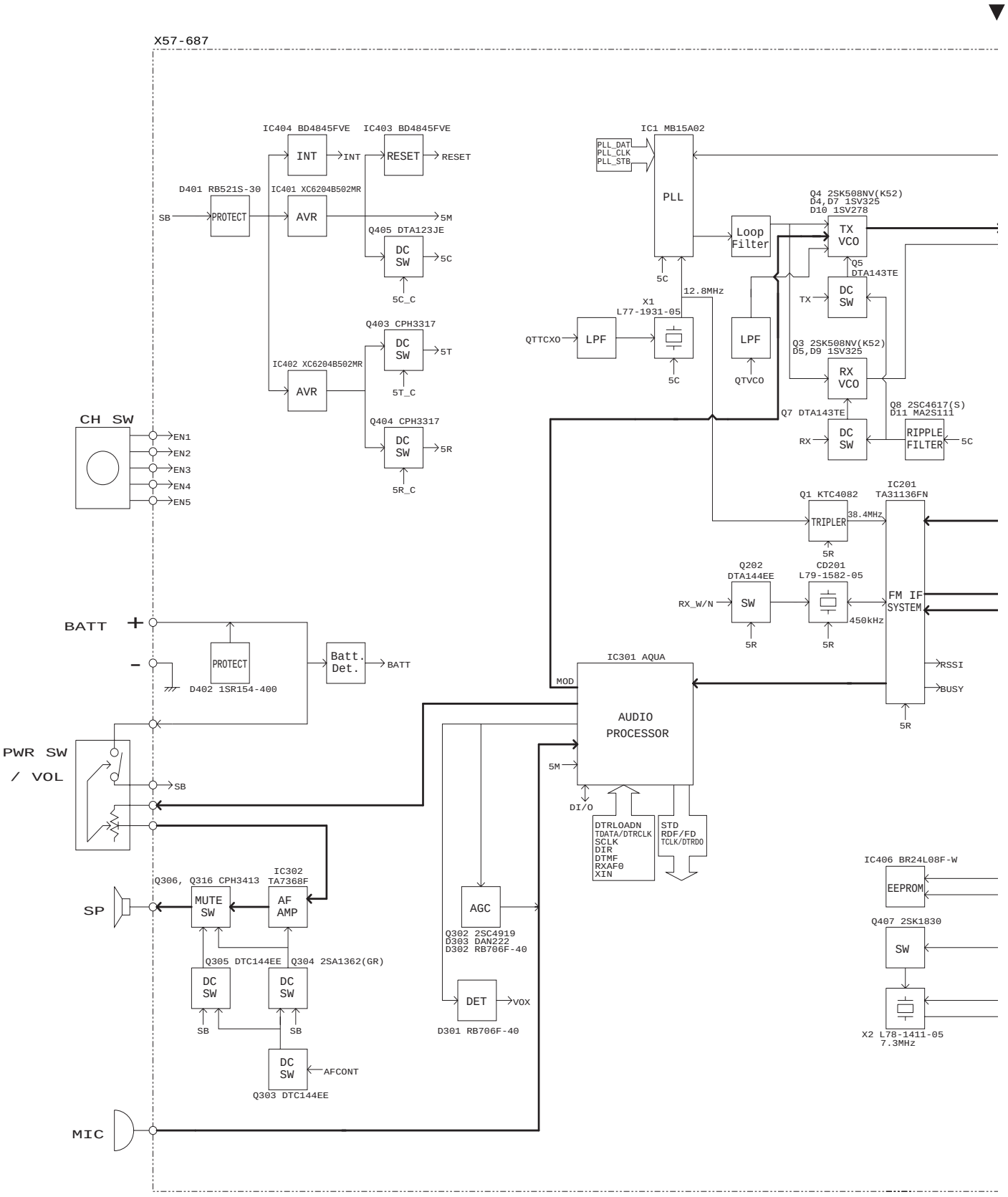

ManualsPlus.com

BLOCK DIAGRAM

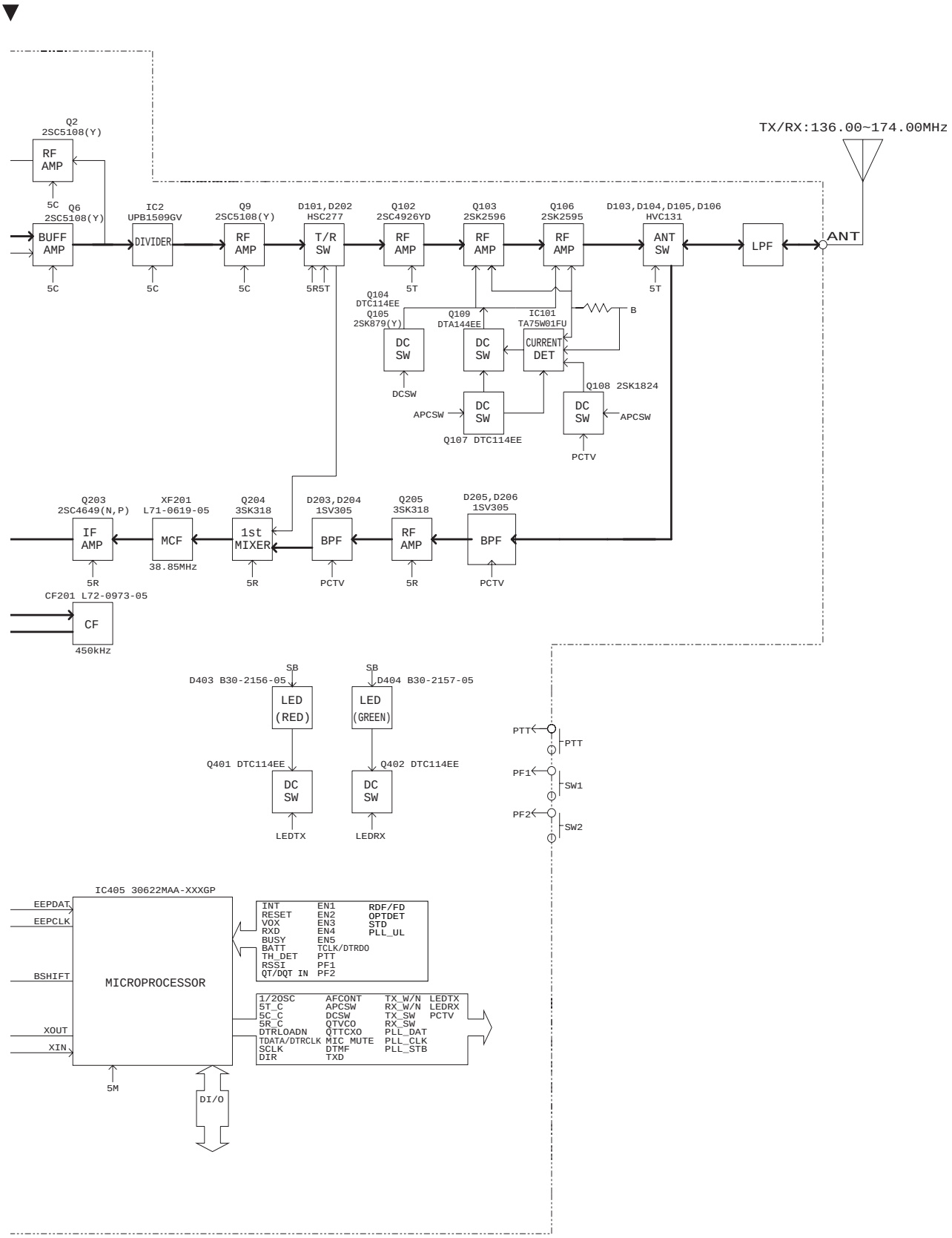

ManualsPlus.com

LEVEL DIAGRAM

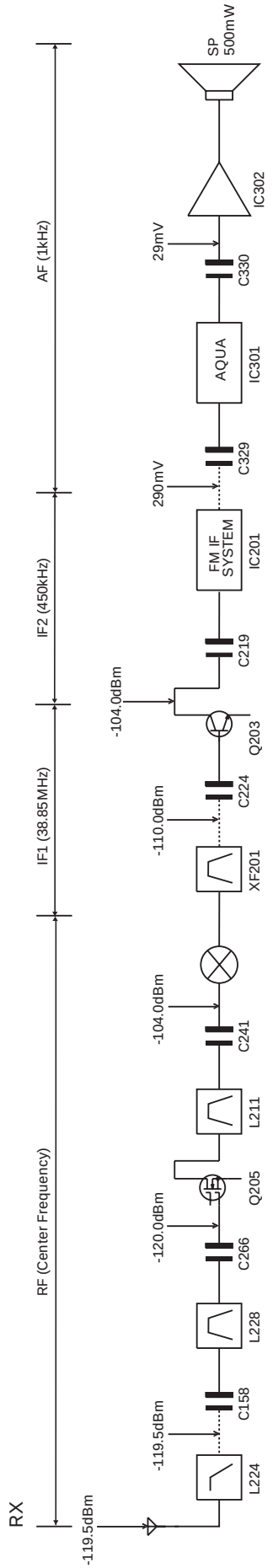

To make measurements in the AF section, connect the AC level meter. (ANT input: -53dBm, 1kHz FM, 3kHz DEV (WIDE).)
In the RF section,use 1000pF coupling capacitor.
(The display shows the SSG input value required to obtain 12dB SINAD without Local Level.)

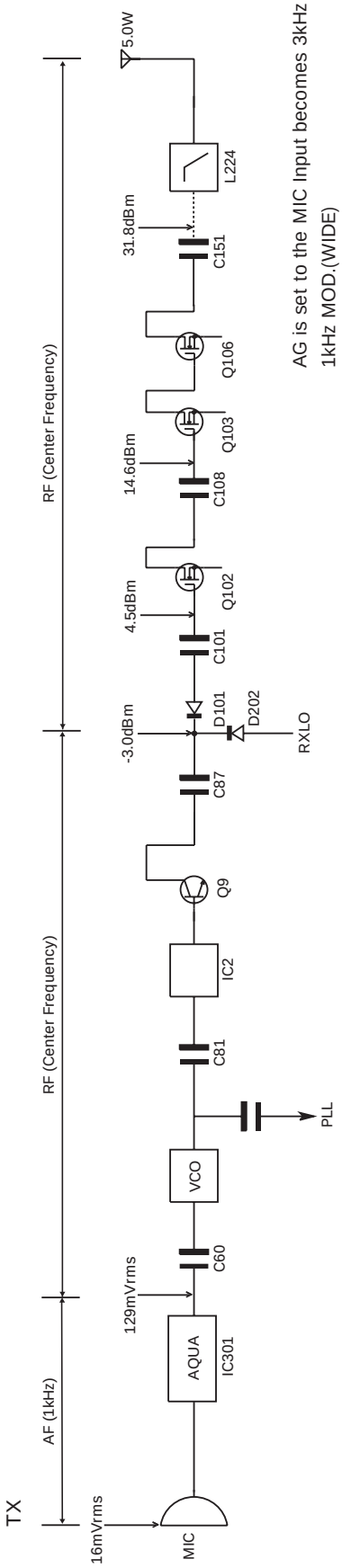

AG is set to the MIC Input becomes 3kHz DEV.at 1kHz MOD.(WIDE)
To make measurements in the AF section, connect the AC level meter.
In the RF section,use 1000pF coupling capacitor.

ManualsPlus.com

KSC-31 / KNB-29N / KNB-30A / KBH-10

KSC-31 (RAPID CHARGER)

■ External View

■ Specifications

Charging current ..... 850mA ±5%
Charging time ..... KNB-29N : Approx.180 minutes
KNB-30A : Approx.120 minutes
Dimensions (Charger only) .... 86.3W x 46.2H x 100.0D (mm)
3-3/8W x 1-7/8H x 4D (inches)
Weight (Charger only) ..... Approx.100g / 0.22 lbs

KNB-30A (Ni-Cd BATTERY PACK)

■ External View

■ Specifications

Voltage ..... 7.2V (1.2V x 6)
Battery capacity ... 1100mAh

■ Schematic Diagram

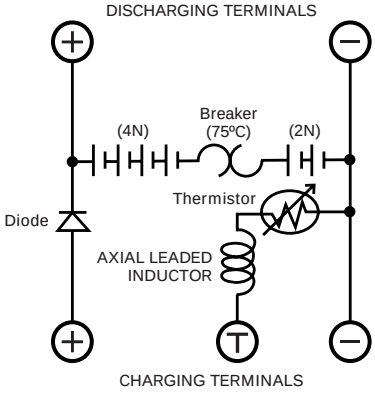

KNB-29N (Ni-MH BATTERY PACK)

■ External View

■ Specifications

Voltage ..... 7.2V (1.2V x 6)
Battery capacity ... 1500mAh

■ Schematic Diagram

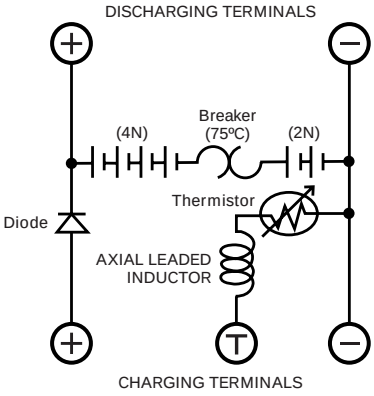

KBH-10 (BELT CLIP)

■ External View

TK-2202/2206

ManualsPlus.com

SPECIFICATIONS

General

Frequency Range	136~174MHz (TK-2202(K, M) TK-2206(M))
Number of channels	Max. 8 (TK-2202) Max. 16 (TK-2206)
Number of groups	Max. 16
Channel Spacing	25kHz, 30kHz (Wide) 12.5kHz, 15kHz (Narrow)
PLL Channel Stepping	2.5kHz, 5kHz, 6.25kHz, 7.5kHz
Operating Voltage	7.5 V DC±20%
Battery Life	More than 14 hours at 5 watts (5-5-90 duty cycle with KNB-29N battery) More than 9 hours at 5 watts (5-5-90 duty cycle with KNB-30A battery)
Operating Temperature range	–30˚C to +60˚C (–22 ˚F to +140 ˚F)
Frequency Stability	±2.5ppm (–30˚C to +60˚C)
Channel Frequency Spread	38MHz
Dimensions and Weight	
Radio Only	54 (2-1/8) W x 122 (4-13/16) H x 21.1 (13/16) D mm (inches) 160g (0.35lbs)
With KNB-29N (1500mAh battery)	54 (2-1/8) W x 122 (4-13/16) H x 33 (1-5/16) D mm (inches) 360g (0.79lbs)
With KNB-30A (1100mAh battery) (Dimensions not including protrusions)	54 (2-1/8) W x 122 (4-13/16) H x 33 (1-5/16) D mm (inches) 340g (0.75lbs)

Receiver (Measurements made per TIA/EIA-603)

Sensitivity	
EIA 12dB SINAD	0.25μV (Wide)/0.28μV (Narrow)
Selectivity	70dB (Wide)/60dB (Narrow)
Intermodulation	65dB (Wide)/60dB (Narrow)
Spurious response	65dB
Audio Power Output	500mW at 8Ω less than 10% distortion

Transmitter (Measurements made per TIA/EIA-603)

RF Power Output	5W/1W
Spurious and Harmonics	65dB
Modulation	16KϕF3E (Wide)/11KϕF3E (Narrow)
FM Noise	45dB (Wide)/40dB (Narrow)
Audio Distortion	Less than 5%

KENWOOD CORPORATION

2967-3, Ishikawa-machi, Hachioji-shi, Tokyo 192-8525, Japan

KENWOOD U.S.A. CORPORATION
P.O. BOX 22745, 2201 East Dominguez Street, Long Beach, CA 90801-5745, U.S.A.

KENWOOD ELECTRONICS CANADA INC.
6070 Kestrel Road, Mississauga, Ontario, Canada L5T 1S8

KENWOOD ELECTRONICS DEUTSCHLAND GMBH
Rembrücker Str. 15, 63150 Heusenstamm, Germany

KENWOOD ELECTRONICS BELGIUM N.V.
Leuvensesteenweg 248 J, 1800 Vilvoorde, Belgium

KENWOOD ELECTRONICS FRANCE S.A.
13, Boulevard Ney, 75018 Paris, France

KENWOOD ELECTRONICS U.K. LIMITED
KENWOOD House, Dwight Road, Watford, Herts., WD18 9EB, United Kingdom

KENWOOD ELECTRONICS EUROPE B.V.
Amsterdamseweg 37, 1422 AC Uithoorn, The Netherlands

KENWOOD ELECTRONICS ITALIA S.p.A.
Via G. Sirtori, 7/9 20129 Milano, Italy

KENWOOD IBERICA S.A.
Bolivia, 239-08020 Barcelona, Spain

KENWOOD ELECTRONICS AUSTRALIA PTY. LTD.
(A.C.N. 001 499 074)
16 Giffnock Avenue, Centrecourt Estate, North Ryde, N.S.W. 2113, Australia

KENWOOD ELECTRONICS (HONG KONG) LTD.
Unit 3712-3724, Level 37, Tower one Metroplaza, 223 Hing Fong Road, Kwai Fong, N.T., Hong Kong

KENWOOD ELECTRONICS SINGAPORE PTE LTD.
1 Genting Lane #07-00 Kenwood Building, Singapore 349544

100%