UHF FM TRANSCEIVER / UHF FM手持机

TK-3118

SERVICE MANUAL / 维修手册

ManualsPlus.com

KENWOOD

© 2001-8 PRINTED IN JAPAN
B51-8576-00 (S) 668

TK-3118

CONTENTS

GENERAL 2
REALIGNMENT 3
CIRCUIT DESCRIPTION 11
SEMICONDUCTOR DATA 17
DESCRIPTION OF COMPONENTS 19
TERMINAL FUNCTION 21
PARTS LIST 22
EXPLODED VIEW 29
PACKING 30
ADJUSTMENT 31
PC BOARD VIEWS
- **DISPLAY UNIT (X41-3583-00)** 37
- **TX-RX UNIT (X57-6243-00)** 39

SCHEMATIC DIAGRAM 51
BLOCK DIAGRAM 55
LEVEL DIAGRAM 57
BC-20, PB-40, PB-41, BT-12 58
SPECIFICATIONS ..... **BACK COVER**

ManualsPlus.com

目录

概述. 2
模式组合 3
电路说明 11
半导体数据 18
元件说明 19
端子功能 21
零件表 22
部件分解图 29
包装 30
调整 31
PC板视图
显示单元 (X41-3583-00) 37
发射－接收单元 (X57-6243-00) 39
原理图 51
方块图 55
电平图 57
BC-20, PB-40, PB-41, BT-12 58
规格 ..... 背面

GENERAL / 概述

INTRODUCTION

SCOPE OF THIS MANUAL

This manual is intended for use by experienced technicians familiar with similar types of commercial grade communications equipment. It contains all required service information for the equipment and is current as of the publication date. Changes which may occur after publication are covered by either Service Bulletins or Manual Revisions. These are issued as required.

ORDERING REPLACEMENT PARTS

When ordering replacement parts or equipment information, the full part identification number should be included. This applies to all parts : components, kits, or chassis. If the part number is not known, include the chassis or kit number of which it is a part, and a sufficient description of the required component for proper identification.

PERSONAL SAFETY

The following precautions are recommended for personal safety :

- DO NOT transmit until all RF connectors are verified secure and any open connectors are properly terminated.
- SHUT OFF and DO NOT operate this equipment near electrical blasting caps or in an explosive atmosphere.
- This equipment should be serviced by a qualified technician only.

SERVICE

This radio is designed for easy servicing. Refer to the schematic diagrams, printed circuit board views, and alignment procedures contained within.

Destnation	Number of CH	RF power output
C	50	5W/2W

引言

本手册的范围

本手册是提供给熟悉通信专业并且具有维修经验的技术人员使用的。它包括了维修该设备所需要的全部资料和现行出版日期。在出版后可能发生变动，如果需要，可以使用《维修通报》或《手册修订本》进行补充。

替换零件的订购

当订购替换零件或设备信息时，应注明完整的零件识别号码。所有的零件均有识别号码：元件、组件或机壳。如果不知道零件的号码，为了正确地识别，必须注明此元件所属的机壳或组件的号码，并对元件进行充分的说明。

个人安全

为了个人的安全，请注意下列事项：

- 在没有认真核实所有射频插头之前或有任何一个打开的插头没有连接到相应端子上的情况下，均不要发射。
- 在电爆管附近或在易燃性气体环境中，必须关掉电源，不要操作本设备。
- 本设备只应该由有资格的技术人员来维修。

维修服务

为了便于维修本设备，建立了完整的维修服务体系，提供了包括原理图、印刷线路板图和调整步骤在内的资料供参考。

型式	信道号码	射频功率输出
C	50	5W/2W

ManualsPlus.com

REALIGNMENT/ 模式组合

1. 各部分介绍

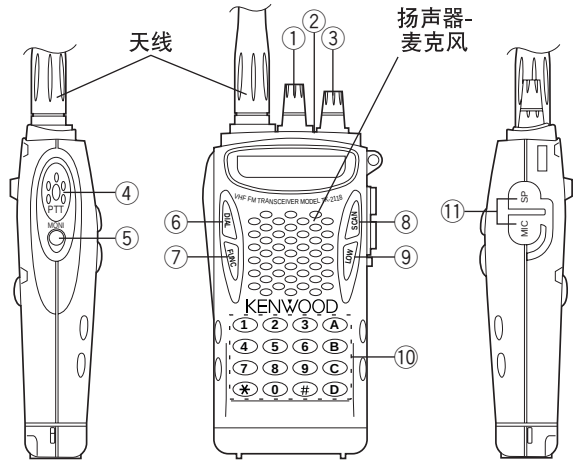

① Power（电源）开关／Volume（音量）控制器
按顺时针方向转动时，接通对讲机的电源。旋转调节音量。关闭对讲机电源时，按逆时针方向旋转到底。

② LED 指示灯
发射中时点亮红色，接收中时点亮绿色。接收符合对您的对讲机设定的代码静噪、选择呼叫代码或者 DTMF 信号中时，闪烁橙色。在发射中电池电压变低时闪烁红色。当电池电压降低时闪烁红色。

③ 旋转编码器
旋转选择频道。进行调节电平设定时，也配合其他功能使用。

④ PTT（按下通话）开关
按下后对着麦克风讲话进行发射。

⑤ MONI（监听）键
根据如何对本键的编程，按下后监听选择的频道。此外也与 FUNC 键配合使用变更频道 QT 代码。

⑥ DIAL（拨号）键
用于存储、确认、发射和删除 DTMF 号码。此外也与 FUNC 键配合使用锁定对讲机的键。

⑦ FUNC（功能）键
按下或者按住本键开启对讲机键的其他功能。

⑧ SCAN（扫描）键
按下本键开始或者停止扫描功能。此外也与 FUNC 键配合使用，暂时将频道闭锁在扫描之外，并且设定对讲机的显示屏照明灯的条件。

⑨ LOW 键
按下本键切换输出功率的高和低。也可以同时使用 FUNC 键设定静噪电平和 VOX 增益。

⑩ DTMF（双音多频）键盘
用于存储和发射 DTMF 号码。

⑪ MIC-SP 插孔
连接另购的扬声器／麦克风。

■ 显示屏

图标	说明
–	监听频道时出现（静噪关闭）。
A	当选择的频道包括在扫描序列中时显示。扫描闭锁的频道不显示本图标。
888.88.8.5	显示工作频率或频道数码、选单设定以及其他功能选择。
88	根据所选择的机能，显示各种数字。
R	当倒频功能接通时显示。
VOX	当 VOX 功能接通时显示。
▬▬▬▬▬▬	接收时，该条形显示表示呼叫信号的强度（条形越多，信号越强）。发射时，表示电池电压（条形越多，电池的剩余电量越多）。
F	按下 FUNC 键进入功能模式后显示。
LO	使用低功率发射时显示。

注：以上未说明的图标在本对讲机中不使用。

2. Modes

User Mode | Self Programming Mode | Wireless Clone Mode | PC Mode

MODE	FUNCTION
User Mode	For normal use.
Self Programming Mode	You can Program the RF frequency, QT/DQT and other functions using only the radio.
Wireless Clone Mode	Used to transfer programming data from one radio to another.
PC Mode	Used for communication between the radio and a PC

2.模式

用户模式 | 自台编程模式 | 无线复制模式 | 计算机模式

模式类型	功能
用户模式	用于一般操作。
自台编程模式	只用手持对讲机便可编程发射接收频率、QT/DQT和其它功能。
无线复制模式	用于从一个手持机编程数据复制到另一个手持机。
计算机模式	用于手持机与计算机之间的通信。

ManualsPlus.com

REALIGNMENT/ 模式组合

3. How to enter each mode

MODE	PROCEDURE
User Mode	Power ON
Self Programming Mode	[MONI] + [DIAL] + POWER ON (More than 2 sec)
Wireless Clone mode	[MONI] + [LOW] + POWER ON (More than 2 sec)
PC Mode	received commands from PC

3. 如何进入每一种模式

模式类型	操作步骤
用户模式	电源ON
自台编程模式	[MONI] + [DIAL] + 电源ON (高于2秒)
无线复制模式	[MONI] + [LOW] + 电源ON (高于2秒)
计算机模式	从计算机接收指令

4. Self Programming mode

After entering self-programming Mode, the radio allows 3 types of operation:
Function setting / Channel setting / All Reset
When self-programming is disable through using the FPU, self programming mode cannot be turned ON.

1) Function setting

You can program 3 settings.
Operation:
After entering Self-Programming Mode Press the [SCAN] key.
The LCD changes to

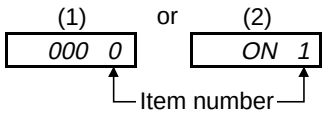

If your radio is programmed with the selective call function, the LCD changes to (1).

When you press the PTT switch after setting the data, you continue to the next item. (Refer to page 7 item 5)

Selecting the setting items	Display (Example)	Setting contents
Setting the Selective Call Code (3 Digit)	(000 0)	You can enter 3 digit code (000 to 999) using the DTMF keys. This feature is available only when "Selective Call" has been activated in the radio.
Setting the BEEP ON or OFF	(ON 1)	OFF: No, ON: Yes This item is selected using the channel selector.
Setting the [MONI] Key Assignment	(0 2)	0: Squelch OFF, 1: Monitor Toggle, 2: Monitor Momentary, OFF: OFF You can select from among the above settings. This item is selected using the channel selector.

4. 自台编程模式

进入自台编程模式后，手持机允许三类操作：
功能设置/信道设置/全部复位
当使用FPU设置禁止自台编程时，便不能进入自台编程模式。

1) 功能设定

您可编程三个设置。
操作：
进入自台编程模式后按[SCAN]键。
LCD变为

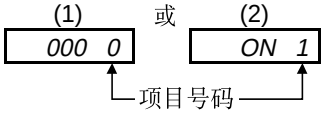

如果您的手持机编程选择呼叫功能，则LCD变为 (1)。

当您在设置数据后按下PTT开关，您便可继续到下一个项目。（请翻阅7页项目5）

选择设置项目	显示 (例如)	设置内容
设置选择呼叫编码。(3位数字)	(000 0)	您可使用DTMF键输入3位代码（000-999）。只有当“选择呼叫功能”已在手持机中设定有效时该功能才可用。
设置峰鸣声ON或OFF	(ON 1)	OFF: 否, ON: 是 该项目通过使用信道选择器来选择。
设置监听[MONI]按键赋值	(0 2)	0: 静噪关闭, 1: 监听器触发, 2: 监听器瞬时, OFF: 关 您可从上述设置中选择。该项目使用信道选择器选择。

ManualsPlus.com

REALIGNMENT/ 模式组合

2) Channel setting

Operation:
After entering Self-Programming Mode Press the [LOW] key.
The LCD changes to CH 1 1

When you press the PTT switch after setting the data, you can continue to the next Item. (Refer to page8 item 6)

Selecting the setting items	Display (Example)	Setting contents
Setting the channel number When a channel number is not set, the following items will not be selected.	(CH 1 1)	Channel range from 1 to 50.
Setting the receive frequency When a receive frequency is not set ("blank" is set), the following items will not be selected. (Item numbers 3 to 12 are not selected.) When "blank" is set, you will return to "setting the channel number".	(..... 2)	Blank
	(450.000 2)	100.00000MHz~549.99375MHz (UHF: 6.25kHz(Default) / 5kHz Step)*1 Default (C): 450.000MHz (C4): 410.000MHz
Setting the receive QT/DQT When a channel number is not set, this item will be skipped.	(OFF 3)	OFF
	(q 100.0 3)	QT(QT frequencies table)*2: 67.0Hz ~ 250.3Hz
	(d 023 3)	DQT(DQT Normal/Inverse table) *2: 023 ~ 754 Normal setting
	(d -023 3)	DQT(DQT Normal/Inverse table) *2: -023 ~ -754 Inverse setting
Setting the transmit frequency	Same as RX Display (This is item number "4".)	Same content as "Setting the received frequency"
Setting the transmit QT/DQT When a transmit frequency is not set, this item will be skipped.	Same as RX Display (This is item number "5".)	Same content as "Setting the receive QT/DQT"
Setting the option signalling	(0 6)	0: None 1: DTMF
Setting the BUSY CH Lockout (BCL)	(OFF 7)	OFF: OFF 1: Carrier 2: QT/DQT 3: DTMF For setting number "3"(DTMF), if of Option Signaling is changed from "DTMF" to "None" before the BCL setting is entered, the BCL setting contents will be automatically set to "OFF" (OFF).
Setting the Beat Shift function ON or /OFF	(OFF 8)	OFF: No ON: Yes
Setting Scan DELETE / ADD	(Add 9)	del: Scan DELETE Add: Scan ADD
Setting Wide / Narrow	(0 10)	0: Narrow 1: Wide
Setting the SP Unmute When option signaling is set to "0" (None), this item will be skipped.	(0 11)	0: Carrier or QT/DQT 1: Carrier + DTMF or QT/DQT + DTMF For setting number "1" (Carrier + DTMF or QT/DQT + DTMF), if Option Signaling is changed from "DTMF" to "None" before the SP Unmute setting item is entered, the SP Unmute setting contents will be automatically set to "0" (Carrier or QT/DQT).
Setting the transmit power	(H 12)	H: High power L: Low power

*1 Step change for setting the frequency

MHz step: Routed the Channel selector while pressing the [1] key.
5kHz or 6.25kHz step: Press the [SCAN] key

2) 信道设定

操作：
进入自台编程模式后按[LOW]键。
LCD变为 CH 1 1

当您在设置数据后按下PTT开关，您便可继续到下一项。
（请翻阅8页项目6）

选择设置项目	显示 (例如)	设置内容
设置信道编号 当未设置信道号时，将不选择以下项目。	(CH 1 1)	信道范围1-50。
设置接收频率 当未设置接收频率时(设置为"空白")，将不选择以下项目。(不选择项目编号3-12。) 当设置为"空白"时，您将返回到"设置信道号"。	(..... 2)	空白
	(450.000 2)	100.00000MHz~549.99375MHz (UHF: 6.25kHz(缺省) /5kHz Step)*1 缺省 (C): 450.000MHz (C4): 410.000MHz
设置接收 QT/DQT 当未设置信道号时，该项目将跳过。	(OFF 3)	OFF
	(q 100.0 3)	QT(QT 频率表)*2: 67.0Hz ~ 250.3Hz
	(d 023 3)	DQT(DQT 正常/反向表)*2: 023 ~ 754 正常设置
	(d -023 3)	DQT(DQT 正常/反向表)*2: -023 ~ -754 反向设置
设置发射频率	与接收显示相同(该项目号为编号"4".)	与 "接收频率" 内容相同。
设置传送 QT/DQT 当未设置发射频率时，该项目将跳过。	与接收显示相同(该项目号为编号"5".)	与 "设置接收 QT/DQT"内容相同。
设置可选信令	(0 6)	0: 无 1: DTMF
设置繁忙信道锁定 (BCL)	(OFF 7)	OFF: 关 1: 载波 2: QT/DQT 3: DTMF 对于设置 "3" (DTMF)，如果在输入BCL设置之前可选信令设置从"DTMF"变为"无"，则BCL设置内容将自动设置为 "OFF" (关)。
设置差拍偏移功能ON或OFF	(OFF 8)	OFF: 否 ON: 是
设置扫描删除／添加扫描	(Add 9)	del: 扫描删除 Add: 扫描添加
设置宽／窄带	(0 10)	0: 窄带 1: 宽带
设置SP不静音 当选择信令的选择被设置到"0"(无)时，该项目将跳过。	(0 11)	0: 载波或 QT/DQT 1: 载波 + DTMF或 QT/DQT + DTMF 对于设置编号"1"(载波+DTMF或QT/DQT+DTMF)，如果在输入SP不静音设置项目之前可选信令设置从"DTMF"变为"无"，则SP不静音设置内容将自动设置为"0" (载波或QT/ DQT)。
设置发射功率	(H 12)	H: 高功率 L: 低功率

*1 设置频率的步进

MHz档：按下[1]键的同时确定信道选择器的方向。
5kHz或6.25kHz档: 按下[SCAN]键

ManualsPlus.com

REALIGNMENT/ 模式组合

∗2 QT/DQT frequency table
OFF/ QT/ DQT: Press the [LOW] key
DQT Normal/ Inverse: Press the [DIAL] key

∗2 QT/DQT频率表
OFF/ QT/ DQT: 按下[LOW]键
DQT正常/反向: 按下[DIAL]

- **QT frequencies (39 frequencies table) /** QT频率 (39个频率表)

QT No.	Frequency [Hz] 频率 [Hz]	QT No.	Frequency [Hz] 频率 [Hz]	QT No.	Frequency [Hz] 频率 [Hz]	QT No.	Frequency [Hz] 频率 [Hz]
1	67.0	11	94.8	21	131.8	31	186.2
2	69.3	12	97.4	22	136.5	32	192.8
3	71.9	13	100.0	23	141.3	33	203.5
4	74.4	14	103.5	24	146.2	34	210.7
5	77.0	15	107.2	25	151.4	35	218.1
6	79.7	16	110.9	26	156.7	36	225.7
7	82.5	17	114.8	27	162.2	37	233.6
8	85.4	18	118.8	28	167.9	38	241.8
9	88.5	19	123.0	29	173.8	39	250.3
10	91.5	20	127.3	30	179.9		

- **DQT table (83 codes) Normal/ Inverse /** DQT(83 代码) 正常/反向表

023	114	174	315	445	631
025	115	205	331	464	632
026	116	223	343	465	654
031	125	226	346	466	662
032	131	243	351	503	664
043	132	244	364	506	703
047	134	245	365	516	712
051	143	251	371	532	723
054	152	261	411	546	731
065	155	263	412	565	732
071	156	265	413	606	734
072	162	271	423	612	743
073	165	306	431	624	754
074	172	311	432	627	

ManualsPlus.com

REALIGNMENT/ 模式组合

5. Function setting / 功能设定

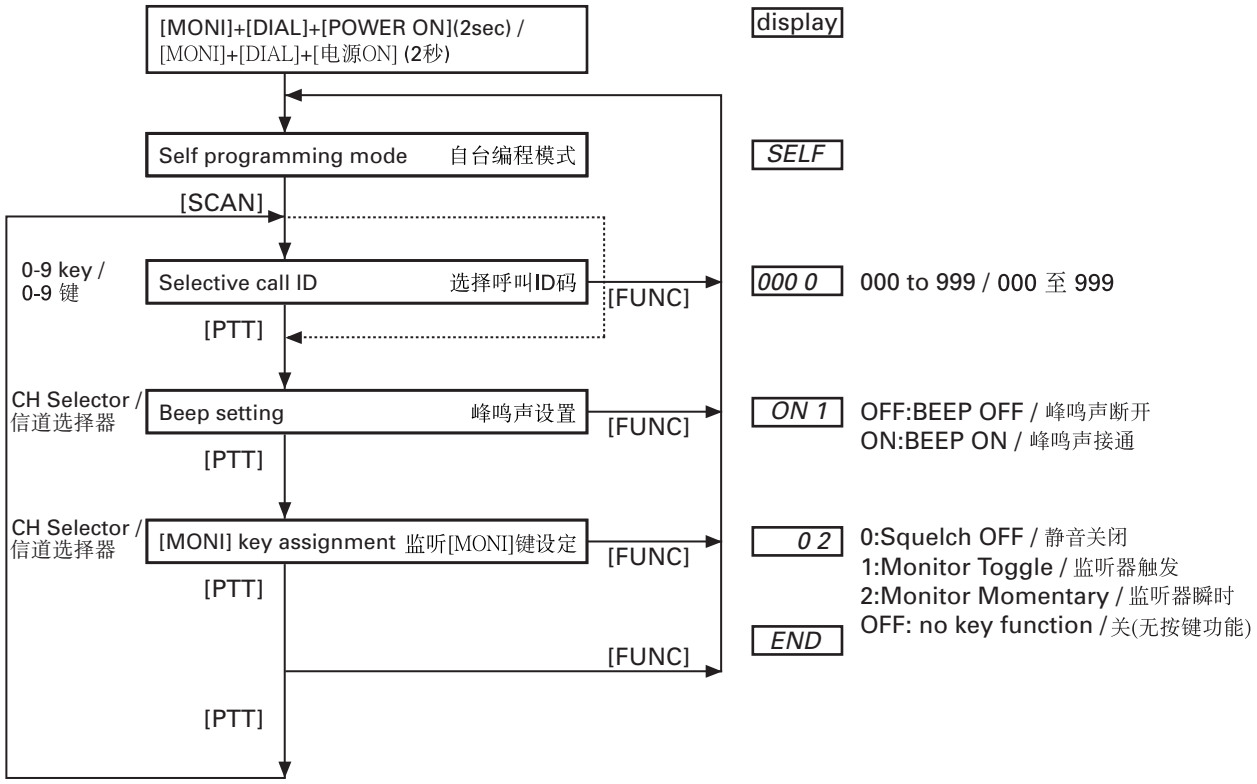

Notes:

- If you radio is not programmed with the selective call function, the Selective call ID setting will be skipped.

注释:

- 如果您的手持机未选择呼叫编码功能，则选择呼叫ID码设置将被跳过。

ManualsPlus.com

REALIGNMENT/ 模式组合

6. Channel Setting / 信道设定

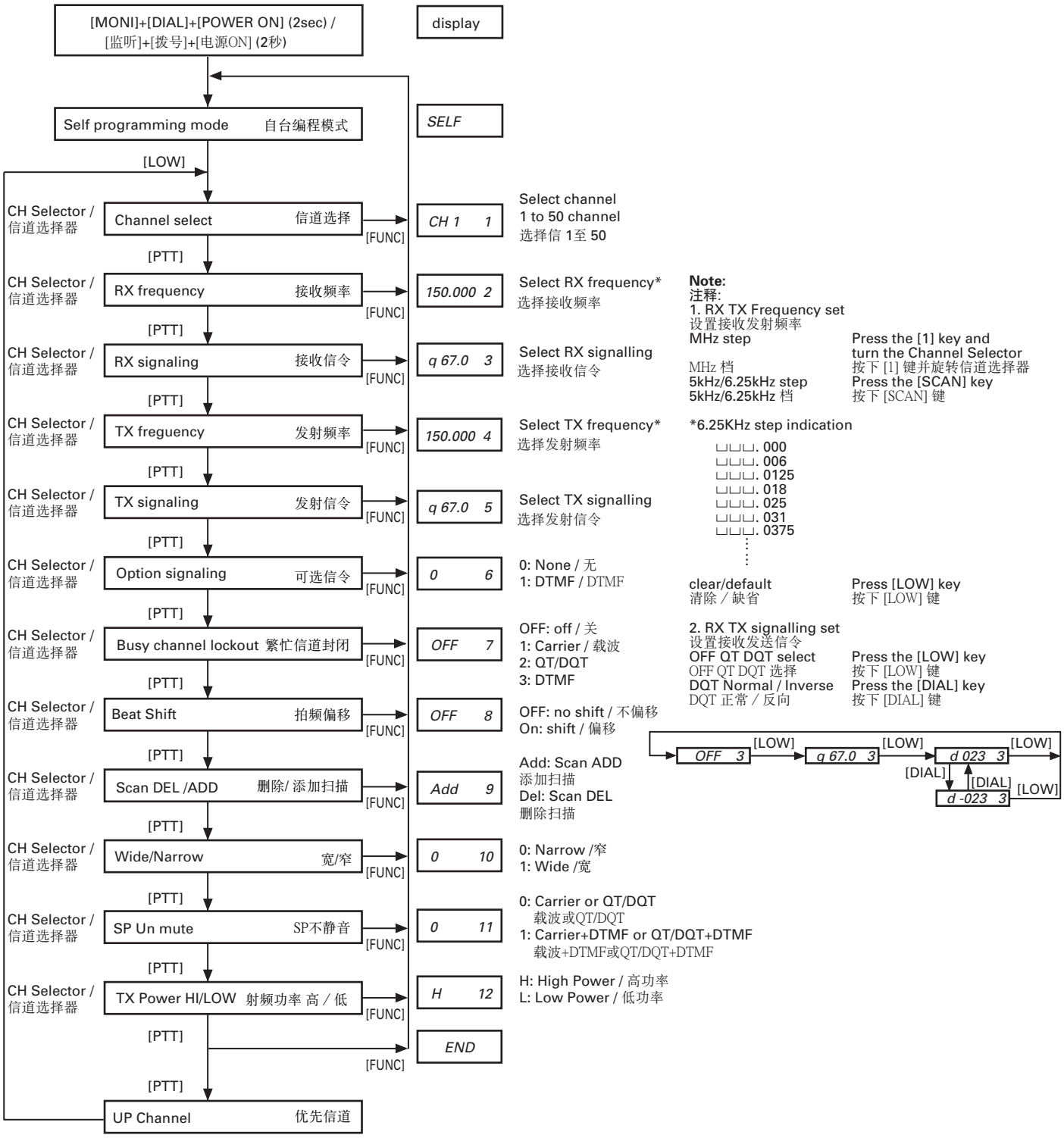

ManualsPlus.com

REALIGNMENT/ 模式组合

7. Wireless Clone Mode

The TK-3118 has a wireless Clone function.
When the wireless clone function is disabled through using the FPU, clone mode cannot be turned ON.

7. 无线复制模式

TK-3118具有无线复制功能。
当使用FPU禁止无线复制功能时，不可接通复制模式。

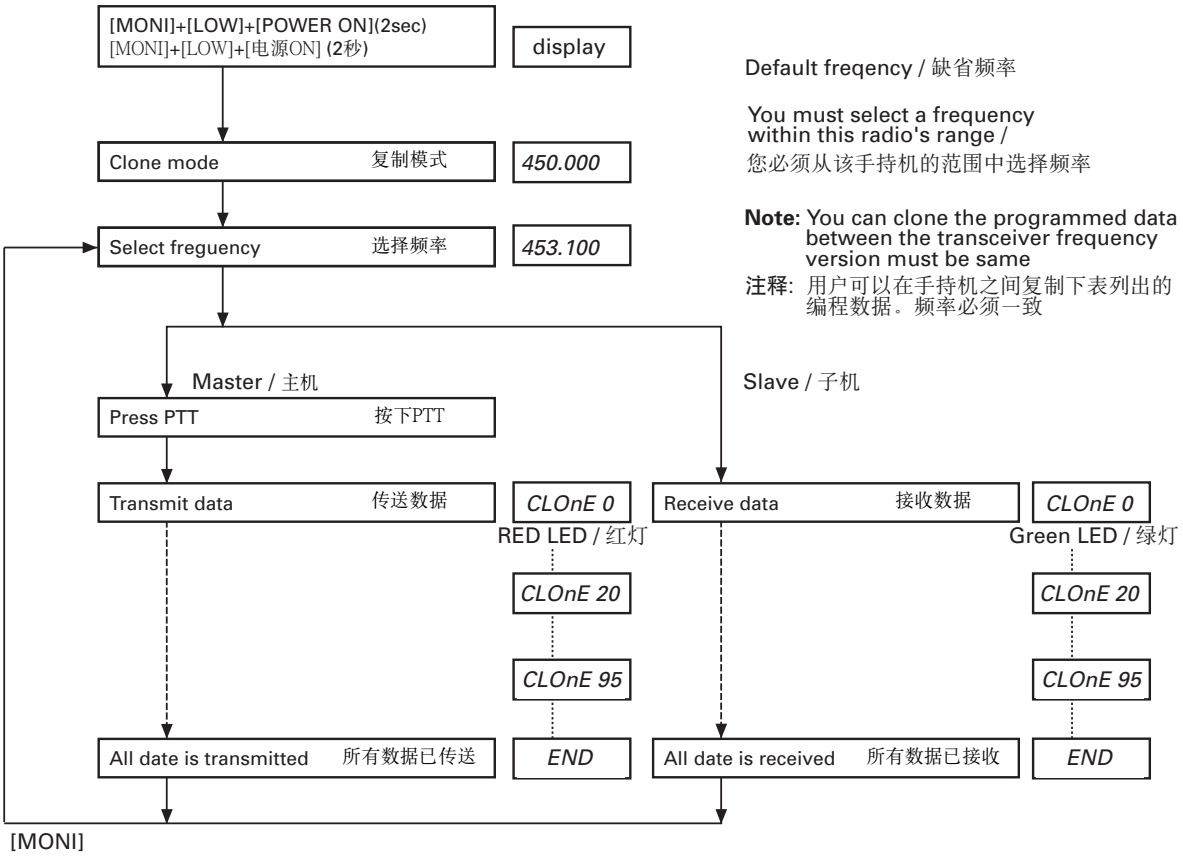

Notes:

- **Remove the antenna from the master radio.**
- **Attach the antenna to the slave radio.**
- **During cloning do not perform any action which might interrupt the cloning, such as cutting off the power to the transceiver.**

注释:

- **将天线从主机拆下。**
- **将天线装到子机上。**
- **在复制过程中不要执行可能中断复制的任何动作，如关掉手持机的电源。**

8. ALL RESET / 全部复位

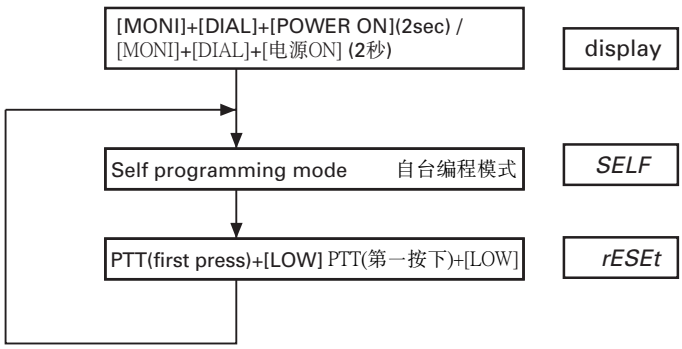

Notes:

- **If you use this function, the Radio data is returned to the default conditions.**
- **Some items cannot be programmed using the self programming mode.**

注释:

- **如果您使用该功能，则手持机数据返回至缺省状态。**
- **有的项目不可通过使用自台编程模式来编程。**

ManualsPlus.com

REALIGNMENT/ 模式组合

9. PC MODE

Preface

The TK-3118 transceiver can be programmed using a personal computer, A programming interface cable (KPG-22) and programming software.

The programming software can be used on an IBM PC or compatible. Fig-1 shows the setup of a PC for programming.

Caution:

When removing or installing the KPG-22 cable, first switch off the radio power.

Additionally, be sure to disable the VOX function, if its enabled, as it can sometimes activate from connection noise.

Connenction procedure

1. Connect the TK-3118 to the personal Computer using the interface cable.
2. When the POWER is switched ON, you can enter user mode.

9. 计算机模式

前言

TK-3118手持机可使用计算机，编程接口电缆(KPG-22)和编程软件来编程。

编程软件可在IBM计算机或兼容机上使用。图 1 表示一台计算机的编程设置过程。

注意:

当拆卸或安装KPG-22电缆时，首先关闭手持机的电源。

另外，一定要禁止VOX(声控增益)功能，如果它被启动，它有时可被噪音连接激活。

连接步骤

1. 使用接口电缆将TK-3118与个人电脑连接。
2. 当接通电源时，您可进入用户模式。

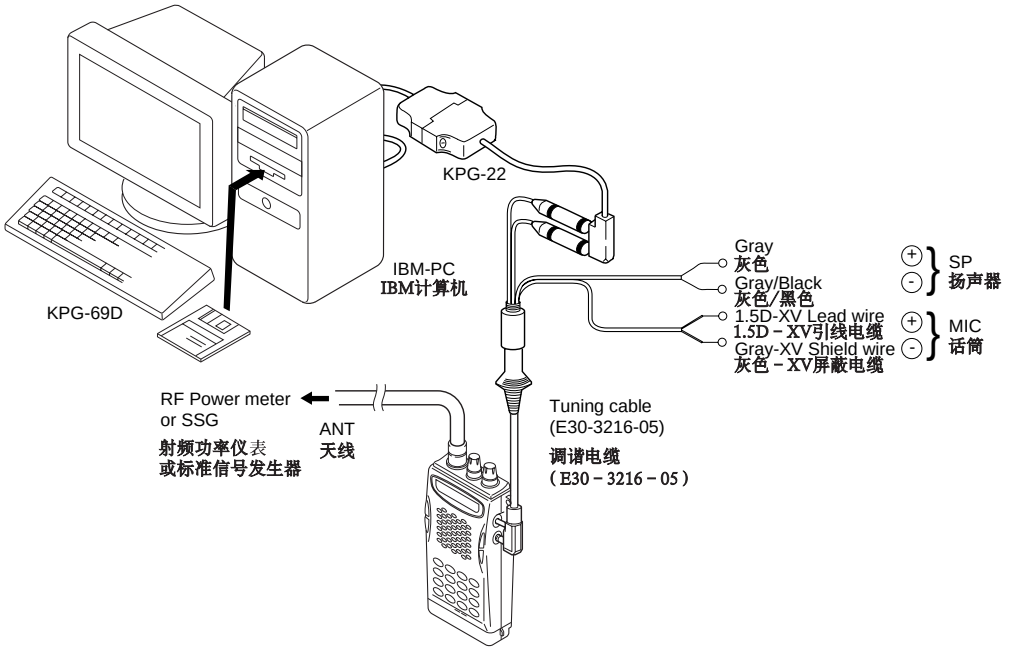

Fig. 1 / 图1

- **KPG-22 description**

  (PC programming interface cable: Option)

  The KPG-22 cable is required to interface the TK-3118 to a computer. It has a circuit in its D-sub connector (25) pin case that converts the RS-232C logic level to TTL.

  The KPG-22 connects the SP/MIC connector of the TK-3118 to the Computer's RS-232C serial port.

- **Programming software description**

  The software (KPG-69D) allows a user to program the TK-3118 radios via the programming interface cable.

- **Programming with IBM PC**

  If data is transferred to the transceiver from a PC with the KPG-69D, the destination data (basic radio information) for each set can be modified.

- **KPG-22说明**

  (计算机编程接口电缆：可选件)

  KPG-22电缆用于将TK-3118与电脑连接。在其D型副插座(25芯)中有一个电平转换电路，此电路可以把RS-232C逻辑电平转换为晶体管逻辑电平。

  KPG-22将TK-3118的扬声器／话筒接头连接到计算机的RS-232C串行端口。

- **编程软件说明**

  软件(KPG-69D)允许用户通过编程接口电缆来编程TK-3118手持机。

- **使用IBM计算机编程**

  如果数据从装有KPG-69D的计算机传送到对讲机，则可修改每组的目标数据(手持机基本设置)。

ManualsPlus.com

CIRCUIT DESCRIPTION / 电路说明

1. Frequency configuration

The receiver utilizes double conversion. The first IF is 38.85MHz and the second IF is 450kHz. The first local oscillator signal is supplied from the PLL circuit.
The PLL circuit in the transmitter generates the necessary frequencies. Fig. 1 shows the frequencies.

1. 频率构成

接收部采用二次变频超外差方式。第一中频为38.85MHz，第二中频为450KHz。第一本振频率信号由锁相环电路(ＰＬＬ)提供。
发射部由锁相环电路直接产生所需要的频率。图 1 显示各种频率。

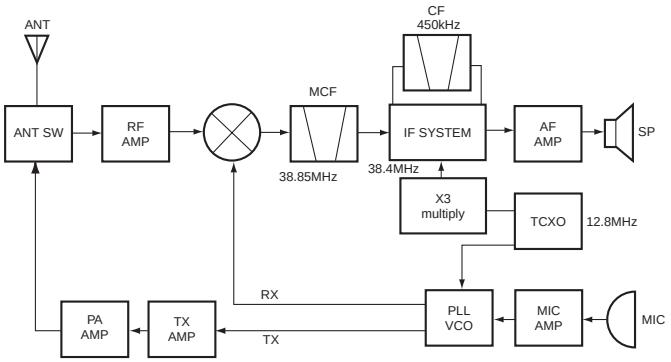

Fig. 1 Frequency configuration / 图1 电路构成

2. Receiver

The receiver is double conversion superheterodyne, designed to operate in the frequency range of 450 to 470MHz (C type), 400 to 420MHz (C4 type).
The frequency configuration is shown in Fig. 1.

1) Front - end RF amplifier

An incoming signal from the antenna is applied to an RF amplifier (Q20) after passing through a transmit/receive switch circuit (D24, D25, D26, and D27) and a 3-pole LC filter. After the signal is amplified (Q20), the signal is filtered by a band pass filter (a 3-pole LC filter) to eliminate unwanted signals before it is passed to the first mixer.

The voltage of these diodes are controlled by to track the MPU (IC300) center frequency of the band pass filter. (See Fig. 2)

2.接收部

接收部为二次变频超外差方式，设计操作的频率范围是450-470MHz (C)，400-420MHz (C2)。

1) 前端射频放大器

从天线输入的信号经过收发转换电路(D24, D25, D26和D27断开)和三极管LC通滤波器后，在射频放大器(Q20)处放大。信号被放大后(Q20)，在通过第一混频器之前，经过带通滤波器(一个三极管LC滤波器)滤波来消除不要的信号。

这些变容二极管的电压由带通滤波器的MPU(IC300)中心频率控制。(参见图2)

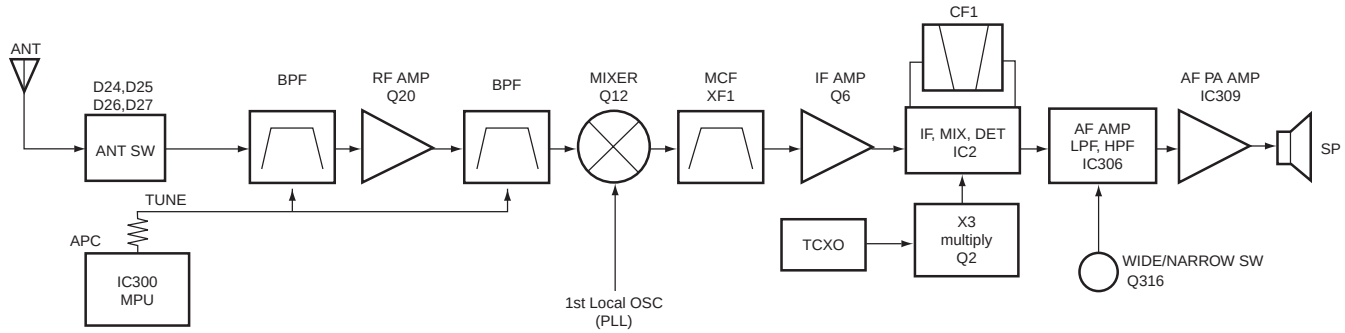

Fig. 2 Receiver section configuration / 图2 接收部构成

ManualsPlus.com

CIRCUIT DESCRIPTION / 电路说明

2) First Mixer

The signal from the RF amplifier is heterodyned with the first local oscillator signal from the PLL frequency synthesizer circuit at the first mixer (Q12) to create a 38.85MHz first intermediate frequency (1st IF) signal. The first IF signal is then fed through two monolithic crystal filters (MCFs : XF1) to further remove spurious signals.

3) IF amplifier

The first IF signal is amplified by Q6, and then enters IC2 (FM processing IC). The signal is heterodyned again with a second local oscillator signal within IC2 to create a 450kHz second IF signal. The second IF signal is then fed through a 450kHz ceramic filter (CF1) to further eliminate unwanted signals before it is amplified and FM detected in IC2.

2) 第一混频器

来自射频放大器的信号与来自锁相环频率合成器电路的第一本振信号在第一混频器 (Q12) 处混频并生成38.85MHz的第一中频 (1st IF) 信号。第一中频信号通过两个单片晶体滤波器 (MCFs: XF1) 进一步消除邻道的杂波信号。

3) 中频放大器

第一中频信号通过Q6放大，然后进入芯片IC2（调频处理芯片)。信号在IC2中与第二本振信号再次混频生成一个450kHz的第二中频信号。在芯片IC2中第二本振信号被放大和鉴频之前，通过一个450kHz陶瓷滤波器 (CF1) 滤除无用杂散信号。

XF1:L71-0586-05

Item	Rating
Nominal center frequency	38.850MHz
Pass band width	±5.0kHz or more at 3dB
35dB stop band width	±18.5kHz or less
Ripple	1.0dB or less
Insertion loss	4.0dB or less
Guaranteed attenuation	70dB or more at fo -910kHz
Terminal impedance	610Ω / 3PF

XF1：L71-0586-05

项目	额定值
标称中心频率	38.850MHz
通频带宽	±5.0kHz或更大　在3dB内
35dB止频带宽	±18.5kHz或更小
脉动	1.0dB或更小
插入损耗	4.0dB或更小
保证衰减	70dB或更大　在fo-910kHz
终端阻抗	610Ω / 3PF

CF1:L72-0958-05

Item	Rating
Nominal center frequency	450kHz
6dB band width	±6.0kHz or more
50dB band width	±12.5kHz or less
Ripple	2.0dB or less at fo ±4kHz
Insertion loss	6.0dB or less
Guaranteed attenuation	35.0dB or more at fo ±100kHz
Terminal impedance	2.0 kΩ

CF1：L72-0958-05

项目	额定值
标称中心频率	450MHz
6dB频带宽度	±6.0kHz或更大
50dB频带宽度	±12.5kHz或更小
脉动	2.0dB或更小　在fo±4kHz
插入损耗	6.0dB或更小
保证衰减	35.0dB或更大　在fo±100kHz
终端阻抗	2.0kΩ

4) AF amplifier

The recovered AF signal obtained from IC2 is amplified by IC306 (1/4), filtered by the IC306 low-pass filter (2/4) and IC306 high-pass filter (3/4) and (4/4), and de-emphasized by R404 and C363. The AF signal is then passed through a WIDE/NARROW switch (Q316). The processed AF signal passes through an AF volume control and is amplified to a sufficient level to drive a loud speaker by an AF power amplifier (IC309).

4) 音频放大器

在IC2中鉴频解调出的音频信号通过IC306 (1/4) 放大，通过IC306低通滤波器 (2/4) 以及IC306高通滤波器 (3/4) 和 (4/4) 滤波，并且通过R404和C363去加重。然后音频信号通过一个宽/窄转换开关 (Q316)。经过处理的音频信号通过音量控制电路再经过音频功率放大器 (IC309) 放大后、驱动扬声器。

ManualsPlus.com

CIRCUIT DESCRIPTION / 电路说明

5) Squelch

Part of the AF signal from the IC enters the FM IC again, and the noise component is amplified and rectified by a filter outside amplifier Q1 and produce DC level by D1 corresponding to the noise level.
The DC signal from the FM IC goes to the analog port of the microprocessor (IC300). IC300 determines whether to output sounds from the speaker by checking whether the input voltage is higher or lower than the preset value.
To output sounds from the speaker, IC300 sends a high signal to the MUTE and AFCO lines and turns IC309 on through Q313, Q320, Q321, Q323 and Q324.(See Fig. 3)

5) 噪音抑制电路

来自FM IC的部分音频信号再次输入到FM IC，在放大器Q1出来由滤波器对噪音部分进行放大和整流，并由相应于噪音电平的D1产生直流电平。
直流信号进入微处理器的模拟端口 (IC300)。IC300通过检测输入电压是否高于或低于预设值来决定是否通过扬声器输出声音。
要通过扬声器输出声音，IC300向静音和自动频率控制振荡器连线发送一个高电平信号并开启IC309通过Q313，Q320，Q321，Q323和Q324。(参见图3)

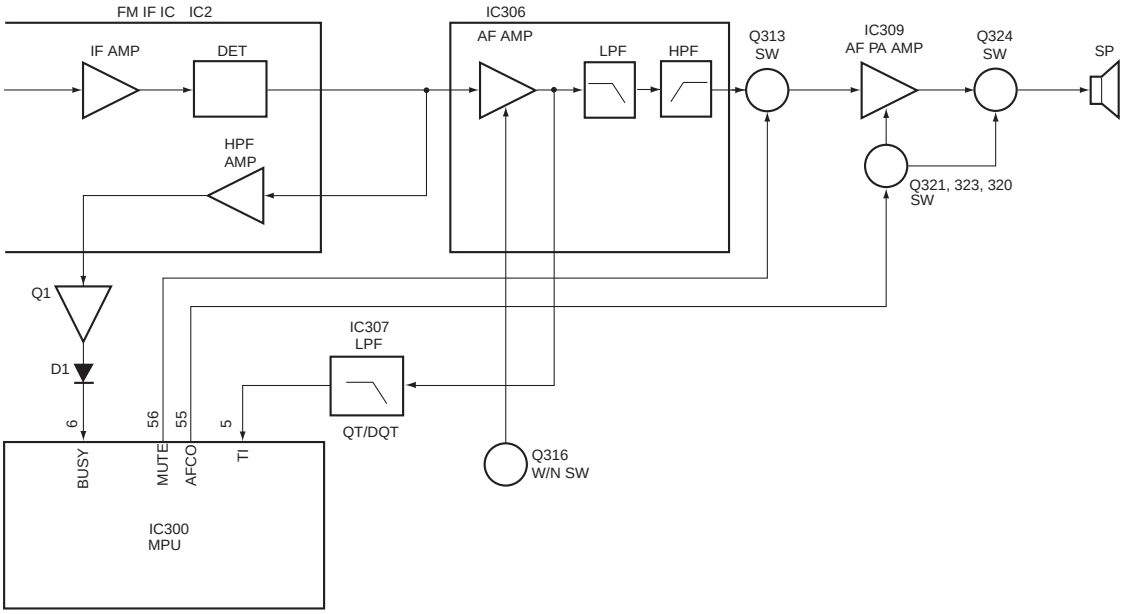

Fig. 3 AF Amplifier and squelch / 图3 音频放大器和噪音抑制电路

6) Receive signaling

QT/DQT

300 Hz and higher audio frequencies of the output signal from IF IC are cut by a low-pass filter (IC307). The resulting signal enters the microprocessor (IC300). IC300 determines whether the QT or DQT matches the preset value, and controls the MUTE and AFCO and the speaker output sounds according to the squelch results.

6) 接受信令

QT/DQT

来自于中频芯片输出信号的300Hz和更高的音频被低频滤波器 (Q307) 截断。所得到的信号输入微处理器 (IC300)。IC300确定QT或DQT是否匹配预设置，并且根据噪声抑制电路的结果控制MUTE和AFCO以及扬声器输出声音。

3. PLL frequency synthesizer

The PLL circuit generates the first local oscillator signal for reception and the RF signal for transmission.

1) PLL

The frequency step of the PLL circuit is 5 or 6.25kHz.
A 12.8MHz reference oscillator signal is divided at IC1 by a fixed counter to produce the 5 or 6.25kHz reference frequency. The voltage controlled oscillator (VCO) output signal is buffer amplified by Q7, then divided in IC1 by a dual-module programmable counter . The divided signal is compared in phase with the 5 or 6.25kHz reference signal in the phase comparator in IC1. The output signal from the phase comparator is filtrered through a low-pass filter and passed to the VCO to control the oscillator frequency. (See Fig.4)

3. 锁相环频率合成器

锁相环电路生成用于接收的第一本振信号和用于发送的射频载波信号。

1) 锁相环电路

锁相环电路的步进频率为5或6.25kHz。12.8MHz的参考振荡器信号通过一个混合计数器在IC1中被分频并生成5或6.25kHz的参考频率。压控振荡器 (VCO) 输出的信号通过Q7缓冲放大器，然后在IC1中被可编程脉冲吞除计数器分频。被分频的信号在带有5或6.25kHz参考信号的相位比较器的IC1中被比较。从相位比较器输出的信号进入一个低通滤波器后，并通过压控振荡器来控制振荡频率。(参见图4)

ManualsPlus.com

CIRCUIT DESCRIPTION / 电路说明

2) VCO

The operating frequency is generated by Q5 in transmit mode and Q4 in receive mode. The oscillator frequency is controlled by applying the VCO control voltage, obtained from the phase comparator, to the varactor diodes (D6 and D9 in transmit mode and D7 and D11 in receive mode). The T/R pin is set high in receive mode causing Q8 and Q9 to turn Q5 off, and turn Q4 on . The T/R pin is set low in transmit mode. The outputs from Q4 and Q5 are amplified by Q7 and sent to the buffer amplifiers.

2) 压控振荡器

在发射模式中通过Q 5 产生操作频率，在接收模式中通过Q 4 产生操作频率。通过相位比较器到变容二极管 （在发射模式中为D6和D9，在接收模式中为D7和D11）采用压控振荡器控制电压来控制振荡频率。在接收模式中，由于Q 8 和Q 9 切断Q 5 并且导通Q 4 ，所以发射/ 接收管脚设置为高电平。在发射模式中，发射/接收管脚设置为低电平。Q4和Q5的输出通过Q7被放大并被发送到缓冲放大器。

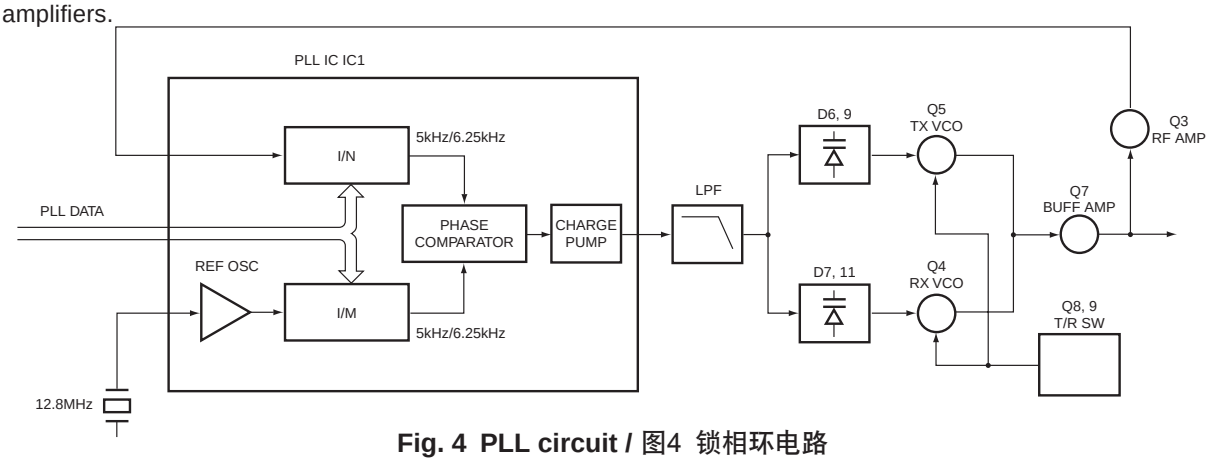

Fig. 4 PLL circuit / 图4 锁相环电路

3) UNLOCK DETECTOR

If a pulse signal appears at the LD pin of IC1, an unlock condition occurs, and the DC voltage obtained from D2, R4, and C12 causes the voltage applied to the UL pin of the microprocessor to go low. When the microprocessor detects this condition, the transmitter is disabled, ignoring the push-to-talk switch input signal. (See Fig.5)

3) 失锁检测器

如果IC1的LD管脚上出现高电平，则产生失锁状态，并从D2, R4获得直流电压，且C12产生的提供给微处理器UL管脚的电压降低。当微处理器检测到此情况时，不能进行发射，无视通话转换开关输入信号。(参见图5)

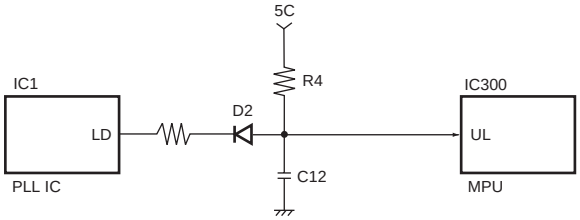

Fig. 5 Unlock detector circuit / 图5 失锁检测器电路

4. Transmitter

1) Transmit audio

The modulation signal from the microphone is amplified by IC308 (A/4), passes through a preemphasis circuit, and amplified by the other IC308 (B/4) to perform IDC operation. The signal then passes through a low-pass filter (splatter filter) IC308 (C/4 and D/4) and cuts 3kHz and higher frequencies. The resulting signal goes to the VCO through the VCO modulation terminal for direct FM modulation. (See Fig. 6)

2) QT/DQT encoder

A necessary signal for QT/DQT encoding is generated by IC300 and FM-modulated to the PLL reference signal. Since the reference OSC does not modulate the loop characteristic frequency or higher, modulation is performed at the VCO side by adjusting the balance. (See Fig. 6)

4. 发射部

1) 发射音频

来自于话筒的调制信号通过IC308 (A/4) 被放大，经过一个预加重电路，并通过另一个IC308 (B/4) 放大后进行IDC处理。然后信号通过一个低通滤波器 (分离滤波器) IC308 (C/4和D/4) 并滤除比3kHz频率更高的部分。得到的信号进入压控振荡器直接进行调频调制。(参见图6)

2) QT/DQT编码器

QT/DQT编码所需的信号通过IC300产生，被锁相环电路的基准频率调整。由于基准振荡器不能对频率环路特性外的频率进行调制，因此通过分配器在压控振荡器一侧进行调制。(参见图6)

ManualsPlus.com

CIRCUIT DESCRIPTION / 电路说明

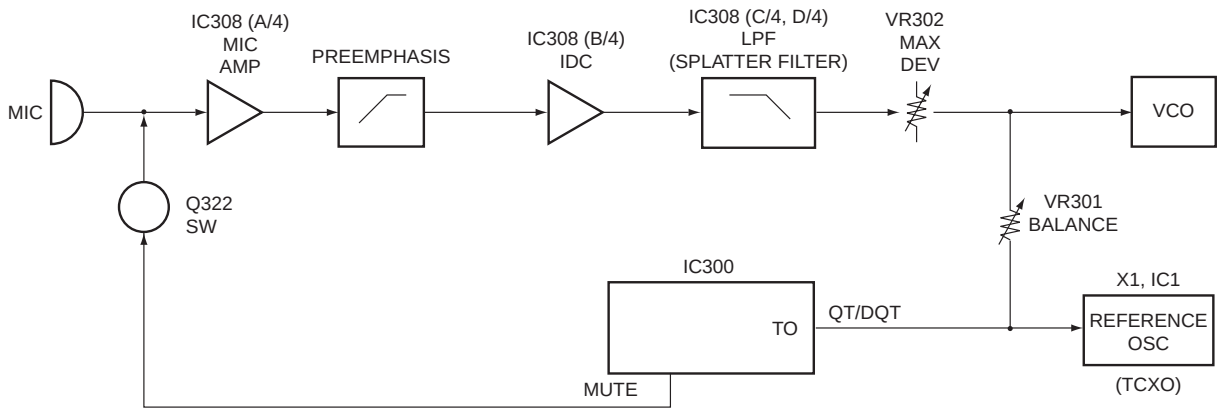

Fig. 6 Transmit audio QT/DQT / 图6 发射音频QT/DQT

3) VCO and RF amplifier

The transmit signal obtained from the VCO buffer amplifier Q11, is amplified by Q13 and Q15. This amplified signal is passed to the power amplifier, Q18 and Q22, which consists of a 2-stage FET amplifier and is capable of producing up to 5W of RF power. (See Fig.7)

3) 压控振荡器和射频放大器

从压控振荡缓冲放大器(Q11)接收到的发送信号通过Q13和Q15被放大。这个放大信号通过功率放大器，Q18和Q22（包括一个二级场效应管放大器)，并能产生5 W射频功率。(参见图7)

4) ANT switch and LPF

The RF amplifier output signal is passed through a low-pass filter network and a transmit/receive switching circuit before it is passed to the antenna terminal. The transmit/receive switching circuit is comprised of D24, D25, D26 and D27. D25 and D26 are turned on (conductive) in transmit mode and off (isolated) in receive mode.

4) 天线转换开关和LPF

在其到达天线终端之前，射频放大器输出信号通过一个低通滤波器网络和一个发射/ 接收转换电路。发射/ 接收转换电路由D24，D25，D26和D27构成。D25和D26在发射模式下开启（通导)，在接收模式下关闭 (隔离)。

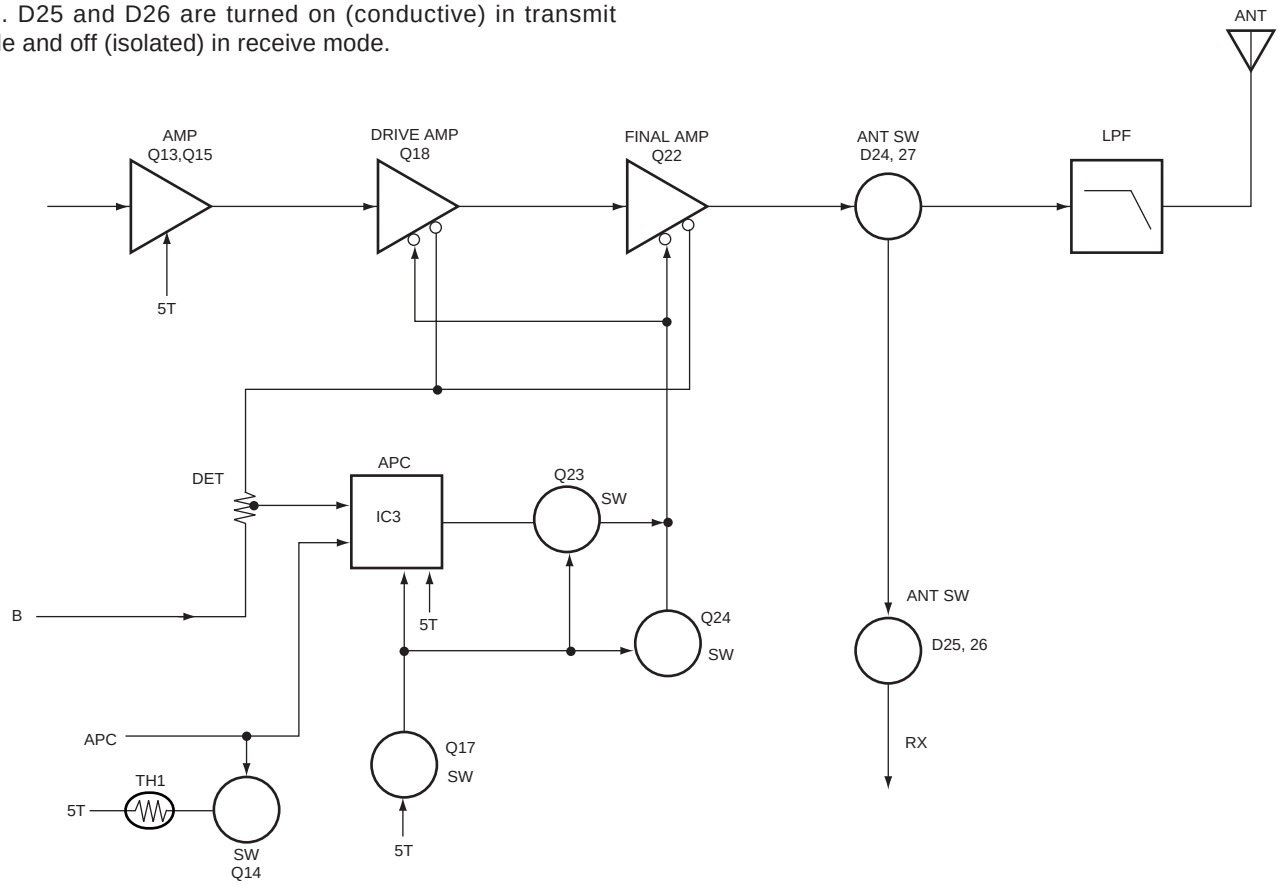

Fig. 7 APC system / 图7 自动功率控制系统

ManualsPlus.com

CIRCUIT DESCRIPTION / 电路说明

5) APC

The automatic power control (APC) circuit stabilizes the transmitter output power at a predetermined level by sensing the drain current of the final amplifier Field Effect Transistor (FET) . The voltage comparator, IC3 (2/2), compares the voltage obtained from the above drain current with a reference voltage which is set using the microprocessor. An APC voltage proportional to the difference between the sensed voltage and the reference voltage appears at the output of IC3 (1/2). This output voltage controls the gate of the FET power amplifier, which keeps the transmitter output power constant. The transmitter output power can be varied by the microprocessor which in turn changes the reference voltage and hence, the output power.

5) 自动功率控制

自动功率控制 (APC) 电路,通过测检末级放大器场效应管的集极电流来稳定发射的输出功率。电压比较电路, IC3 (2/2) 用微处理机设定的参考电压来比较从末级电流所获得的电压。自动功率控制电压与IC3 (1/2) 输出的自动检测电压和参考电压之间的差值成正比。此输出电压控制场效应管功率放大器，保持发射部输出功率常数。发射部输出功率可以通过微处理器进行改变，在微处理器中改变参考电压来控制输出功率。

6) Terminal protection circuit

When the thermistor (TH1) reaches about 80˚C, the protection circuit turns on Q14 to protect transmitting final amplifier (Q22) from the over heating.

6) 温度保护电路

当热敏电阻 (TH1) 的温度达到80℃时，保护电路开启Q14来保护末级放大器 (Q22) 避免过热。

5. Power supply

The battery power source is internally regulated by the circuit (IC305) and outputs 3.5V DC (3.5M).

This 3.5V DC (3.5M) is also supplied to the microprocessor (IC300) and reset IC (IC304).

In the meantime, the microprocessor and switching transistor also generate a [3.5MS] reference voltage from this source.

This reference voltage is used for the following DC power sources:

3.5V DC (3.5R for the receiver, 3.5C for both the receiver and transmitter) 5.0V DC (5R for the receiver, 5T for the transmitter, and 5C for both the receiver and transmitter)

5.电源

电池电源由电路 (IC305) 内部调整并输出3.5V直流。

3.5V直流 (3.5M) 也提供到微处理器 (IC300) 和复位IC (IC304)。

同时，微处理器和开关晶体管也从该电源生成 [3.5MS] 参考电压。

该参考电压用于以下直流电源:

3.5V直流 (3.5R用于接收，3.5C用于接收和发射) 5.0V直流 (5R用于接收，5T用于发射，5C用于接收和发射)。

6. Control system

The microprocessor (IC300) is operating at a clock of 7.37 MHz. The clock oscillator has an additional circuit to shift the oscillating frequency, using a switching transistor (Q303) to remove the internal beat interference that may be caused by this oscillator. This microprocessor controls the LCD display, key operations, PLL data and other various functions.

6.控制系统

微处理器 (IC300) 正在7.37MHz时钟下运行。时钟振荡器有其它电路转换振荡频率，并使用开关晶体管 (Q303) 来消除可能由该振荡器引起的内部拍频干扰。该微处理器控制LCD显示器、按钮操作、锁相环电路数据和其它各种功能。

ManualsPlus.com

SEMICONDUCTOR DATA

Microprocessor: M38267M8L271GP (IC 300)

Pin No.	I/O	Port Name	Function
1	I	BATT	Battery level input
2	I	UL	PLL IC Unlock Unlock="L"
3	I	SM	Signal Meter
4	I	TIBI	QT/DQT external circuit bias input
5	I	TI	QT/DQT signal input
6	I	BUSY	Busy signal input
7	I	REM	Connect to TXD
8	I	VOX	For detecting Mic input Voice level
9	O	APC	TX Auto Power Control
10	O	DTMF	DTMF Encoding
11	O	WNTC	Max. Deviation Control ("H"-Narrow, "L"-Wide)
12	O	WNRC	Audio Sense Control ("L"-Narrow, "H"-Wide)
13	I	NC	NC
14	O	NC	NC
15	O	BEEP	Beep output
16	O	TO	QT/DQT output
17	I	NC	NC
18	I	PTT	PTT key Press (Connected to RXD) Press "L"
19	O	TXD	For FPU (RS-232) communication (With REM)
20	I	RXD	For FPU (RS-232) communication (With PTT)
21	I	SD	Serial data from DTMF IC
22	I	STD	DTMF IC control Detect="H"
23	I	UP	Encoder for Channel up
24	I	DOWN	Encoder for Channel down
25	O	PD	DTMF IC Power down pin Power down="H"
26	O	PS	Power Save for PLL IC. ON="L"
27	O	NC	NC
28	O	V1	Vertical Key Matrix
29	O	V2	Vertical Key Matrix
30	O	V3	Vertical Key Matrix
31	O	V4	Vertical Key Matrix
32	I	INTO	LOW Voltage detect. Detect="L"
33	I	RESET	Reset input pin for active "L"
34	I	NC	NC
35	O	NC	NC
36	I	Xin	Connect to crystal 7.3728MHz
37	O	Xout	Connect to crystal 7.3728MHz
38	I	Vss	GND
39	O	SHIFT	Beat shift H : shift ON
40	O	NC	NC
41	I	MONI	For Monitor Key Press. Press= "L"
42	I	H1	Horizontal Key Matrix
43	I	H2	Horizontal Key Matrix
44	I	H3	Horizontal Key Matrix
45	I	H4	Horizontal Key Matrix
46	I	H5	Horizontal Key Matrix
47	I/O	SDA	EEPROM IC data
48	I	SCL	EEPROM IC data
49	O	NC	NC
50	O	SAVE	Battery Save. ON= "L"
51	O	3.5MC	Common Power supply ON= "L"
52	O	3.5TC	TX Circuit Power Supply ON= "H"
53	O	RX	TX/RX VCO select TX= "L"
54	O	3.5RC	RX Circuit Power Supply ON= "H"
55	O	AFCO	Speaker Mute Mute= "H"
56	O	MUTE	AF/Microphone Mute Mic mute= "H" AF mute= "L"
57	O	RLED	ON/OFF Red led ON= "H"
58	O	GLED	ON/OFF Green led ON= "H"
59	O	LED	LCD LAMP ON= "H"
60	O	LE	PLL IC data load Enable "H"
61	O	DT	PLL IC data
62	O	CK	PLL IC clock
63	O		LCD
64	O		LCD
65	O		LCD
66	O		LCD
67	O		LCD
68	O		LCD
69	O		LCD
70	O		LCD
71	O		LCD
72	O		LCD
73	O		LCD
74	O		LCD
75	O		LCD
76	O		LCD
77	O		LCD
78	O		LCD
79	O		LCD
80	O		LCD
81	O		LCD
82	O		LCD
83	O		LCD
84	O		LCD
85	O		LCD
86	O		LCD
87	O		LCD
88	O		LCD
89	I	VCC	Connected to Power Supply
90	I	VREF	Connected to Power Supply
91	I	VSS	GND
92	O	NC	NC
93	O		LCD
94	O		LCD
95	O		LCD
96	I		LCD Voltage level
97	I		LCD Voltage level
98	I	NC	
99	I	NC	
100	I		LCD Voltage level

FET : 2SK3475 (Q18)

Absolute Maximum Ratings (Ta=25°C)						
Item	V_{DSS}	V_{GSS}	I_D	Pch*	Tch	Tstg
Rating	20V	±5V	1.0A	3W	150°C	-45~+150°C
				*Tc=25°C		

FET : 2SK3476 (Q22)

Absolute Maximum Ratings (Ta=25°C)						
Item	V_{DS}	V_{GSS}	I_D	Pch*	Tch	Tstg
Rating	20V	±5V	3.0A	20W	150°C	-45~+150°C
				*Tc=25°C		

ManualsPlus.com

半导体数据

微处理器: M38267M8L271GP (IC 300)

Pin No.	I/O	端口名称	功能
1	I	BATT	电池电平输入
2	I	UL	失锁状态　失锁＝ "L"
3	I	SM	信号强度表
4	I	TIBI	QT/DQT外部电路频偏输入
5	I	TI	QT/DQT信号输入
6	I	BUSY	繁忙信号输入
7	I	REM	连接至数字式电话交换机
8	I	VOX	检测话筒的输入音量
9	O	APC	发射自动电流控制
10	O	DTMF	DTMF解码
11	O	WNTC	最大Dev.控制 ("H"－窄，"L"－宽)
12	O	WNRC	音频读出控制 ("L"－宽，"H"－窄)
13	I	NC	NC
14	O	NC	NC
15	O	BEEP	Beep 输出
16	O	TO	QT/DQT输出
17	I	NC	NC
18	I	PTT	PTT按键按下（连接至RXD）按下"L"
19	O	TXD	对于FPU（RS-232C）通讯（REM）
20	I	RXD	对于FPU（RS-232C）通讯（PTT）
21	I	SD	来自DTMF IC的串行数据
22	I	STD	DTMF IC控制　检测= "H"
23	I	UP	上行信道解码器
24	I	DOWN	下行信道解码器
25	O	PD	DTMF IC断电　断电= "H"
26	O	PS	PLL 省电　ON= "L"
27	O	NC	NC
28	O	V1	垂直键矩阵
29	O	V2	垂直键矩阵
30	O	V3	垂直键矩阵
31	O	V4	垂直键矩阵
32	I	INTO	低电压检测 检测= "L"
33	I	RESET	为有效 "L" 复位输入引脚
34	I	NC	NC
35	O	NC	NC
36	I	Xin	连接至晶体7.3728MHz
37	O	Xout	连接至晶体7.3728MHz
38	I	Vss	接地
39	O	SHIFT	拍频偏移　H:开启转移
40	O	NC	NC
41	I	MONI	监听按键按下。 按下= "L"
42	I	H1	水平键矩阵
43	I	H2	水平键矩阵
44	I	H3	水平键矩阵
45	I	H4	水平键矩阵
46	I	H5	水平键矩阵
47	I/O	SDA	EEPROM IC数据
48	I	SCL	EEPROM IC数据
49	O	NC	NC
50	O	SAVE	电池省电。　ON= "L"
51	O	3.5MC	普通电源　ON= "L"
52	O	3.5TC	发射电路电源　ON= "H"
53	O	RX	发射／接收压控振荡器选择 发射= "L"
54	O	3.5RC	接收电路电源　ON= "H"
55	O	AFCO	扬声器静音　静音= "H"
56	O	MUTE	音频/话筒静音 话筒静音= "H"　音频静音= "L"
57	O	RLED	ON/OFF红色发光二极管 ON= "H"
58	O	GLED	ON/OFF绿色发光二极管 ON= "H"

Pin No.	I/O	端口名称	功能
59	O	LED	LCD LAMP　ON= "H"
60	O	LE	PLL IC数据 Load启用 "H"
61	O	DT	PLL IC数据
62	O	CK	PLL IC时钟
63	O		LCD
64	O		LCD
65	O		LCD
66	O		LCD
67	O		LCD
68	O		LCD
69	O		LCD
70	O		LCD
71	O		LCD
72	O		LCD
73	O		LCD
74	O		LCD
75	O		LCD
76	O		LCD
77	O		LCD
78	O		LCD
79	O		LCD
80	O		LCD
81	O		LCD
82	O		LCD
83	O		LCD
84	O		LCD
85	O		LCD
86	O		LCD
87	O		LCD
88	O		LCD
89	I	VCC	连接至电源
90	I	VREF	连接至电源
91	I	VSS	接地
92	O	NC	NC
93	O		LCD
94	O		LCD
95	O		LCD
96	I		LCD电压电平
97	I		LCD电压电平
98	I	NC	
99	I	NC	
100	I		LCD电压电平

FET : 2SK3475 (Q18)

绝对最大定额 (Ta=25℃)						
Item	V_{DSS}	V_{GSS}	I_D	Pch*	Tch	Tstg
Rating	20V	± 5V	1.0A	3W	150℃	-45~ +150℃
				*Tc=25℃		

FET : 2SK3476 (Q22)

绝对最大定额 (Ta=25℃)						
Item	V_{DS}	V_{GSS}	I_D	Pch*	Tch	Tstg
Rating	20V	± 5V	3.0A	20W	150℃	-45~ +150℃
				*Tc=25℃		

ManualsPlus.com

DESCRIPTION OF COMPONENTS / 元件说明

TX-RX UNIT (X57-6243-00)

Ref No.	Semiconductor	Description
IC1	IC	PHASE LOCKED LOOP SYSTEM
IC2	IC	IF SYSTEM
IC3	IC	AUTOMATIC POWER CONTROL
IC300	IC	MICRO PROCESSOR
IC301	IC	DTMF DECODER
IC302	IC	EEPROM
IC303	IC	VOLTAGE DETECT
IC304	IC	RESET
IC305	IC	VOLTAGE REGULATER (3.5V)
IC306	IC	AUDIO AMP ACTIVE FILTER
IC307	IC	ACTIVE FILTER
IC308	IC	MIC AMP LIMITER
IC309	IC	AUDIO POWER AMP
Q1	TRANSISTOR	NOISE AMP
Q2	TRANSISTOR	TRIPLER
Q3	TRANSISTOR	RF AMP
Q4	TRANSISTOR	VCO RX
Q5	TRANSISTOR	VCO TX
Q6	TRANSISTOR	IF AMP
Q7	TRANSISTOR	RF BUFFER AMP
Q8	FET	DC SWITCH
Q9	TRANSISTOR	DC SWITCH
Q10	TRANSISTOR	RIPPLE FILTER
Q11	TRANSISTOR	RF AMP
Q12	FET	1st MIXER
Q13	TRANSISTOR	RF AMP (TX)
Q14	TRANSISTOR	TEMPERATURE PROTECTION SWITCH
Q15	TRANSISTOR	TX PRE-DRIVE
Q17	FET	DC SWITCH
Q18	FET	TX DRIVE
Q20	FET	RF AMP (RX)
Q22	FET	TX FAINAL
Q23,24	TRANSISTOR	DC SWITCH
Q300	TRANSISTOR	DC SWITCH (GREEN LED)
Q301	TRANSISTOR	DC SWITCH (RED LED)
Q302	TRANSISTOR	DC SWITCH (LCD LED)
Q303	TRANSISTOR	CLOCK SHIFT SWITCH
Q304	TRANSISTOR	DC SWITCH (3.5MS)
Q305	TRANSISTOR	VOLTAGE REGULATER (5T)
Q306	FET	DC SWITCH
Q307,308	TRANSISTOR	VOLTAGE REGULATER (5T,5C)
Q309	TRANSISTOR	DC SWITCH (5R)
Q310,311	TRANSISTOR	VOLTAGE REGULATER (3.5C)
Q312	TRANSISTOR	DC SWITCH
Q313	FET	AF MUTE (RX)
Q314	TRANSISTOR	ACTIVE HPF (RX)
Q315	TRANSISTOR	DC SWITCH (KEY LED)
Q316	TRANSISTOR	DC SWITCH (WIDE/NARROW)
Q317	TRANSISTOR	AF AMP (VOX)
Q318	FET	DC SWITCH (WIDE/NARROW)
Q319	TRANSISTOR	DC SWITCH (5R)
Q320,321	TRANSISTOR	DC SWITCH
Q322	TRANSISTOR	MIC MUTE AGC
Q323	TRANSISTOR	DC SWITCH
Q324	FET	AUDIO SWITCH (SP)
Q325	TRANSISTOR	DC SWITCH (3.5R)
D1	DIODE	NOISE DETECT
D2	DIODE	UNLOCK DETECT
D3	DIODE	REVERSE PROTECTION

发射－接收单元 (X57-6243-00)

Ref No.	半导体	说明
IC1	IC	锁相环路系统
IC2	IC	中频系统
IC3	IC	自动功率控制
IC300	IC	微处理器
IC301	IC	DTMF解码器
IC302	IC	EEPROM
IC303	IC	电压检测
IC304	IC	复位开关
IC305	IC	电压 E 调节器
IC306	IC	音频放大器有源滤波器
IC307	IC	有源滤波器
IC308	IC	音频放大 / 限幅器
IC309	IC	音频功率放大器
Q1	晶体管	噪音放大器
Q2	晶体管	三倍频
Q3	晶体管	射频放大器
Q4	晶体管	压控振荡器接收
Q5	晶体管	压控振荡器发射
Q6	晶体管	中频放大器
Q7	晶体管	射频缓冲放大器
Q8	场效应管	直流开关
Q9	晶体管	直流开关
Q10	晶体管	脉动滤波器
Q11	晶体管	射频放大器
Q12	场效应管	第一混频器
Q13	晶体管	射频放大器 (发射)
Q14	晶体管	温度保护开关
Q15	晶体管	发射预放大器
Q17	场效应管	直流开关
Q18	场效应管	驱动放大器
Q20	场效应管	射频放大器 (接收)
Q22	场效应管	末级射频功率放大器
Q23,24	晶体管	直流开关
Q300	晶体管	直流开关 (绿色)
Q301	晶体管	直流开关 (红色)
Q302	晶体管	直流开关 (LCD 背景灯光)
Q303	晶体管	时钟位移开关
Q304	晶体管	直流开关 (3.5MS)
Q305	晶体管	电压 E 调节器 (5T)
Q306	场效应管	直流开关
Q307,308	晶体管	电压调节器 (5T, 5C)
Q309	晶体管	直流开关 (5R)
Q310,311	晶体管	电压调节器 (3.5C)
Q312	晶体管	直流开关
Q313	场效应管	音频静音 (接收)
Q314	晶体管	有效最高可用频率 (接收)
Q315	晶体管	直流开关 (按键发光二极光)
Q316	晶体管	直流开关 (宽 / 窄)
Q317	晶体管	音频放大器 (VOX)
Q318	场效应管	直流开关 (宽 / 窄)
Q319	晶体管	直流开关 (5R)
Q320,321	晶体管	直流开关
Q322	晶体管	扬声器静音 / 自动增益控制
Q323	晶体管	直流开关
Q324	场效应管	音频开关
Q325	晶体管	直流开关 (3.5R)
D1	二极管	噪音检测
D2	二极管	失锁检测
D3	二极管	反向保护

ManualsPlus.com

DESCRIPTION OF COMPONENTS / 元件说明

Ref No.	Semiconductor	Description
D6	VARIABLE CAPACITANCE DIODE	FREQ. CONTROL (TX)
D7	VARIABLE CAPACITANCE DIODE	FREQ. CONTROL (RX)
D9	VARIABLE CAPACITANCE DIODE	FREQ. CONTROL (TX)
D11	VARIABLE CAPACITANCE DIODE	FREQ. CONTROL (RX)
D12	VARIABLE CAPACITANCE DIODE	MODULATION
D13	DIODE	CURRENT STEERING
D14,15	DIODE	RF SWITCH
D16-18	VARIABLE CAPACITANCE DIODE	BPF TUNING
D19	-	
D21-23	VARIABLE CAPACITANCE DIODE	BPF TUNING
D24-27	DIODE	ANTENA SWITCH
D28	DIODE	REVERSE PROTECTION
D300	LED	TX
D301	DIODE	AUDIO DETECTOR
D302	-	
D304,305	LED	LCD ILLUMINATION
D306	DIODE	LIMITER
D307	DIODE	MIC AGC DETECT
D308	DIODE	MIC MUTE/AGC SWITCH
D309	ZENER DIODE	VOLTAGE PROTECTION
D313	LED	BUSY

Ref No.	半导体	说明
D6	变容二极管	频率控制 (发射)
D7	变容二极管	频率控制 (接收)
D9	变容二极管	频率控制 (发射)
D11	变容二极管	频率控制 (接收)
D12	变容二极管	调制
D13	二极管	电流方向
D14,15	二极管	射频开关
D16-18	变容二极管	BPF 调谐
D19	-	
D21-23	变容二极管	BPF 调谐
D24-27	二极管	天线开关
D28	二极管	反向保护
D300	发光二极管	发射
D301	二极管	音频探测器
D302	-	
D304,305	发光二极管	LCD背景灯光
D306	二极管	限幅器
D307	二极管	扬声器自动增益控制检测
D308	二极管	扬声器静音 / 自动增益控制开关
D309	齐纳二极管	电压保护
D313	发光二极管	繁忙

DISPLAY UNIT (X41-3583-00)

Ref No.	Semiconductor	Description
D100-107	LED	KEY ILLUMINATION

显示单元 (X41-3583-00)

Ref No.	半导体	说明
D100-107	发光二极管	按键背景灯光

ManualsPlus.com

TERMINAL FUNCTION / 端子功能

TX-RX UNIT

CN No.	Location	Pin No.	Name	I/0	Function
CN301	TXRX Unit B	1	AF	I	RF AF LINE
		2	SM	I	RX SIGNAL STRENGTH
		3	3.5R	O	RX3.5V
		4	BUSY	I	RX SQUELCH
		5	MOD	O	TX MODULATION
		6	5C	O	COMMON 5V
		7	RX	O	VCO RX/TX SW
		8	5T	O	TX 5V
		9	E	-	GND
		10	5R	O	RX 5V
		11	3.5C	O	COMMON 3.5V
		12	PS	O	PLL IC POWER SAVE
		13	TO	O	TX QT/DQT
		14	E	-	GND
		15	EP	O	PLL IC ENABLE
		16	E	-	GND
		17	DT	O	PLL IC DATA
		18	NC	-	NC
		19	CK	O	PLL IC CLOCK
		20	E	-	GND
		21	UL	I	PLL UNLOCK
		22	B	I	UN-SWITCHED POWER SUPPLY
		23	APC/TUNE	O	TX APC/ RX TUNE
CN302	TXRX Unit B	1	E	-	
		2	E	-	
		3	MONI	I	MONITOR SW
		4	E	-	
		5	NC	-	
		6	PTT	I	PTT SW
CN303	TXRX Unit B	1	SPK	O	INTERNAL SPEAKER
		2	SPK	O	INTERNAL SPEAKER
		3	SPKE	-	SPEAKER GND
		4	MICE	-	MIC GND
		5	MIC	I	INTERNAL MIC
		6	LED SW	O	KEY ILLMINATION LED SW
		7	SB	O	SWITCHED POWER SUPPLY
		8	H5	I	KEY MATRIX
		9	H4	I	KEY MATRIX
		10	H3	I	KEY MATRIX
		11	H2	I	KEY MATRIX
		12	H1	I	KEY MATRIX
		13	V4	O	KEY MATRIX
		14	V3	O	KEY MATRIX
		15	V3	O	KEY MATRIX
		16	V1	O	KEY MATRIX

发射－接收单元

CN No.	位置	Pin No.	名称	I/0	功能
CN301	TXRX Unit B	1	AF	I	接收音频线路
		2	SM	I	接收信号强度
		3	3.5R	O	接收3.5V
		4	BUSY	I	接收静噪抑制电路
		5	MOD	O	发射调制
		6	5C	O	普通 5V
		7	RX	O	压控接收 / 发射开关
		8	5T	O	发射5V
		9	E	-	接地
		10	5R	O	接收 5V
		11	3.5C	O	普通 3.5V
		12	PS	O	PLL 省电
		13	TO	O	发射 QT/DQT
		14	E	-	接地
		15	EP	O	PLL IC 启用
		16	E	-	接地
		17	DT	O	PLL IC 数据
		18	NC	-	NC
		19	CK	O	PLL IC 时钟
		20	E	-	接地
		21	UL	I	失锁
		22	B	I	非切换电源
		23	APC/TUNE	O	发射APC/ 接收调谐
CN302	TXRX Unit	1	E	-	
		2	E	-	
		3	MONI	I	监听开关
		4	E	-	
		5	NC	-	
		6	PTT	I	PTT 开关
CN303	TXRX Unit B	1	SPK	O	内部扬声器
		2	SPK	O	内部扬声器
		3	SPKE	-	扬声器接地
		4	MICE	-	话筒接地
		5	MIC	I	内部话筒
		6	LED SW	O	按键照明发光二极管开关
		7	SB	O	切换电源
		8	H5	I	键矩阵
		9	H4	I	键矩阵
		10	H3	I	键矩阵
		11	H2	I	键矩阵
		12	H1	I	键矩阵
		13	V4	O	键矩阵
		14	V3	O	键矩阵
		15	V3	O	键矩阵
		16	V1	O	键矩阵

ManualsPlus.com

PARTS LIST / 零件表

∗ New Parts. ⚠ indicates safety critical components.
Parts without **Parts No.** are not supplied.
Les articles non mentionnes dans le **Parts No.** ne sont pas fournis.
Teile ohne **Parts No.** werden nicht geliefert.

TK-3118

Ref. No.	Address	New parts	Parts No.	Description	Destination
TK-3118					
1	3A	∗	A01-2173-11	CABINET(REAR)	
2	1A	∗	A02-3559-13	CABINET ASSY(FRONT)	
3	3A	∗	A62-0932-03	PANEL ASSY	
4	3A	∗	B09-0599-03	CAP	
5	1A	∗	B10-2652-03	FRONT GLASS	
6	-	∗	B62-1387-10	INSTRUCTION MANUAL	
7	3A	∗	B72-1886-14	MODEL NAME PLATE	
8	3A	∗	E04-0430-05	RF COAXIAL RECEPTACLE(SMA)	
9	2B	∗	E23-1148-04	BATT TERMINAL(-)	
10	2B	∗	E23-1169-04	BATT TERMINAL(+)	
11	2B	∗	E23-1186-04	GROUND TERMINAL	
12	2B	∗	F07-1839-03	COVER(FPC)	
13	3A	∗	G11-2664-24	RUBBER SHEET(RF PCB)	
14	3A	∗	G11-4031-14	RUBBER SHEET(VOL,ENC)	
15	1A	∗	G53-1521-04	PACKING(SP/MIC)	
16	-	∗	H12-3088-05	PACKING FIXTURE	
17	-		H25-0085-04	PROTECTION BAG (100/200/0.07)	
18	-	∗	H52-1720-02	ITEM CARTON CASE	
19	2B	∗	J19-5391-02	HOLDER(BATT TERMINAL)	
20	-		J29-0623-04	BELT HOOK ACCESSORY	
21	-	∗	J61-0429-05	BAND ACCESSORY	
22	-	∗	J69-0352-05	HANDSTRAP ACCESSORY	
23	3A	∗	K29-5442-03	KNOB(VOL)	
24	3A	∗	K29-5443-03	KNOB(ENC)	
25	1B	∗	K29-9026-13	KEY TOP(DIAL SCAN)	
26	3B	∗	K29-9027-03	KNOB(PTT MONI)	
27	1B	∗	K29-9028-13	KEY TOP(DTMF)	
A	3A	∗	N09-2377-05	SPECIAL SCREW(SMA)	
B	3A		N14-0582-14	CIRCULAR NUT(SMA)	
C	3A	∗	N14-0590-04	CIRCULAR NUT(VOL ENC)	
D	1A		N38-2030-46	PAN HEAD MACHINE SCREW	
E	3A,3B		N80-2016-45	PAN HEAD TAPTITE SCREW	
F	2A		N83-2004-46	PAN HEAD TAPTITE SCREW	
G	-	∗	N99-2023-05	SCREW SET ACCESSORY	
H	2B		N09-2282-05	TAPTITE SCREW	
SP	1A		T07-0362-05	SPEAKER	
ANT	-	∗	T90-0759-05	HELICAL ANTENNA	
DISPLAY UNIT (X41-3583-30)					
D100-107			B30-2157-05	LED(YELLOW)	
C600			CK73GB1H471K	CHIP C 470PF K	
28	2B		E37-0865-05	SPEAKER CORD	
		∗	J30-1267-04	SPACER(ECM)	
30	2B	∗	J82-0071-15	FPC	
R307-310			RK73GB1J102J	CHIP R 1.0K J 1/16W	
R600-603			RK73GB1J221J	CHIP R 220 J 1/16W	
R604-606			RK73GB1J680J	CHIP R 68 J 1/16W	

TX-RX UNIT (X57-6243-00)

Ref. No.	Address	New parts	Parts No.	Description	Destination
31	2B		T91-0616-05	MIC ELEMENT	
TX-RX UNIT (X57-6243-00)					
32	2A	∗	A13-1632-03	FRAME	
33	1A	∗	B11-1268-04	FILTER(LCD)	
34	1A	∗	B11-1269-03	ILLUMINATION GUIDE(LCD)	
35	1A	∗	B38-0848-05	LCD	
D300			B30-2156-05	LED(RED)	
D304,305			B30-2143-05	LED(YG)	
D313			B30-2157-05	LED(YELLOW)	
C1			CK73HB1H471K	CHIP C 470PF K	
C2			C92-0576-05	CHIP-TAN 1.0UF 6.3WV	
C3			CK73GB1H471K	CHIP C 470PF K	
C4			CK73GB1C473K	CHIP C 0.047UF K	
C5			C92-0507-05	CHIP-TAN 4.7UF 6.3WV	
C6			CK73HB1H471K	CHIP C 470PF K	
C7			CC73HCH1H100D	CHIP C 10PF D	
C8			CK73GB1H472K	CHIP C 4700PF K	
C9			CK73GB1C104K	CHIP C 0.10UF K	
C10			CK73HB1H471K	CHIP C 470PF K	
C11			CK73HB1H102K	CHIP C 1000PF K	
C12			CK73HB1A104K	CHIP C 0.10UF K	
C13			CC73HCH1H101J	CHIP C 100PF J	
C14			CC73HCH1H100D	CHIP C 10PF D	
C15			CK73GB1C333K	CHIP C 0.033UF K	
C16			CK73HB1H102K	CHIP C 1000PF K	
C18			CK73GB1H471K	CHIP C 470PF K	
C21			CC73HCH1H470J	CHIP C 47PF J	
C25			C92-0001-05	CHIP-C 0.1UF 35WV	
C26			CK73HB1H331K	CHIP C 330PF K	
C27			CK73GB1H471K	CHIP C 470PF K	
C28			CK73HB1H471K	CHIP C 470PF K	
C29			C92-0512-05	CHIP-TAN 1.0UF 16WV	
C30			CK73HB1H221K	CHIP C 220PF K	
C32			C92-0560-05	CHIP-TAN 10UF 6.3WV	
C33			CC73HCH1H150J	CHIP C 15PF J	
C34			CC73HCH1H020C	CHIP C 2.0PF C	
C35			C92-0001-05	CHIP-C 0.1UF 35WV	
C36			CK73HB1H471K	CHIP C 470PF K	
C40			CK73GB1H102K	CHIP C 1000PF K	
C41			CC73HCH1H680J	CHIP C 68PF J	
C42			C92-0560-05	CHIP-TAN 10UF 6.3WV	
C43			CC73HCH1H330J	CHIP C 33PF J	
C44			CC73HCH1H121J	CHIP C 120PF J	
C45			CC73HCH1H030C	CHIP C 3.0PF C	
C46			CK73GB1H471K	CHIP C 470PF K	
C47			CC73HCH1H330J	CHIP C 33PF J	
C49			CC73HCH1H680J	CHIP C 68PF J	
C50			CK73HB1H471K	CHIP C 470PF K	
C51			C92-0560-05	CHIP-TAN 10UF 6.3WV	
C53			CK73GB1H103K	CHIP C 0.010UF K	
C54			CK73GB1C104K	CHIP C 0.10UF K	

ManualsPlus.com

PARTS LIST / 零件表

TX-RX UNIT (X57-6243-00)

Ref. No.	Address	New parts	Parts No.	Description			Destination
C59			CK73HB1H182K	CHIP C	1800PF	K	
C60			CK73HB1H102K	CHIP C	1000PF	K	
C62,63			CK73HB1H471K	CHIP C	470PF	K	
C64			CC73GCH1H080B	CHIP C	8.0PF	B	
C65			CC73GCH1H150J	CHIP C	15PF	J	
C66			CC73GCH1H100C	CHIP C	10PF	C	
C68			CC73GCH1H120G	CHIP C	12PF	G	
C69			CK73HB1H182K	CHIP C	1800PF	K	
C70			CC73HCH1H270J	CHIP C	27PF	J	
C71			CC73HCH1H0R5B	CHIP C	0.5PF	B	
C72			CC73GCH1H050B	CHIP C	5.0PF	B	
C73			CC73GCH1H030B	CHIP C	3.0PF	B	
C74			CK73HB1H471K	CHIP C	470PF	K	
C75			CC73GCH1H130J	CHIP C	13PF	J	
C77			CK73HB1H471K	CHIP C	470PF	K	
C78			CK73GB1C104K	CHIP C	0.10UF	K	
C79			CC73GCH1H0R5B	CHIP C	0.5PF	B	
C80			CC73HCH1H080D	CHIP C	8.0PF	D	
C81			CC73GCH1H100C	CHIP C	10PF	C	
C82			CC73GCH1H0R5B	CHIP C	0.5PF	B	
C83			CK73HB1H471K	CHIP C	470PF	K	
C85-87			CK73HB1H471K	CHIP C	470PF	K	
C88			CK73HB1C103K	CHIP C	0.010UF	K	
C90			CC73HCH1H060B	CHIP C	6.0PF	B	
C91			CK73HB1H471K	CHIP C	470PF	K	
C92			CC73GCH1H090D	CHIP C	9.0PF	D	
C93			CC73HCH1H220J	CHIP C	22PF	J	
C95			CK73HB1H471K	CHIP C	470PF	K	
C96			CK73HB1C103K	CHIP C	0.010UF	K	
C97			C92-0507-05	CHIP-TAN	4.7UF	6.3WV	
C98-101			CK73HB1H471K	CHIP C	470PF	K	
C102			CK73HB1H102K	CHIP C	1000PF	K	
C103			CC73HCH1H030C	CHIP C	3.0PF	C	
C104			CK73HB1H471K	CHIP C	470PF	K	
C105			CC73HCH1H150J	CHIP C	15PF	J	
C107			CK73HB1H471K	CHIP C	470PF	K	
C109			CK73HB1C103K	CHIP C	0.010UF	K	
C111			CK73HB1H471K	CHIP C	470PF	K	
C112			CC73GCH1H100C	CHIP C	10PF	C	
C116			CK73HB1H471K	CHIP C	470PF	K	
C121			CK73HB1H471K	CHIP C	470PF	K	
C122			CC73GCH1H050B	CHIP C	5.0PF	B	
C125			CC73GCH1H050B	CHIP C	5.0PF	B	
C126			CK73GB1H471K	CHIP C	470PF	K	
C127			CC73GCH1H020B	CHIP C	2.0PF	B	
C129			CK73GB1H471K	CHIP C	470PF	K	
C130			CC73GCH1HR75B	CHIP C	0.75PF	B	
C131			CC73GCH1H050B	CHIP C	5.0PF	B	
C133			CK73GB1C104K	CHIP C	0.10UF	K	
C134			CK73HB1H471K	CHIP C	470PF	K	
C135			CC73GCH1H090B	CHIP C	9.0PF	B	
C137			CK73GB1H471K	CHIP C	470PF	K	
C138			CK73HB1H471K	CHIP C	470PF	K	
C139			CC73GCH1HR75B	CHIP C	0.75PF	B	
C140			CC73GCH1H040B	CHIP C	4.0PF	B	
C141			CC73GCH1H050B	CHIP C	5.0PF	B	

Ref. No.	Address	New parts	Parts No.	Description			Destination
C145			CC73GCH1H560J	CHIP C	56PF	J	
C146			CK73GB1H102K	CHIP C	1000PF	K	
C147			CC73GCH1H471J	CHIP C	470PF	J	
C149			CK73HB1H471K	CHIP C	470PF	K	
C150			CK73GB1H471K	CHIP C	470PF	K	
C151			C92-0565-05	CHIP-TAN	6.8UF	10WV	
C152			CK73HB1H471K	CHIP C	470PF	K	
C154			CK73GB1H471K	CHIP C	470PF	K	
C159			CK73HB1H471K	CHIP C	470PF	K	
C163			CK73HB1H471K	CHIP C	470PF	K	
C164			CK73GB1H471K	CHIP C	470PF	K	
C166-168			CK73GB1H471K	CHIP C	470PF	K	
C169			CC73GCH1H050B	CHIP C	5.0PF	B	
C170			CK73GB1H471K	CHIP C	470PF	K	
C172			CK73HB1H471K	CHIP C	470PF	K	
C173			CC73GCH1HR75B	CHIP C	0.75PF	B	
C174			CK73GB1H471K	CHIP C	470PF	K	
C176			CK73GB1H103K	CHIP C	0.010UF	K	
C177			CK73GB1H471K	CHIP C	470PF	K	
C178			CC73GCH1H050B	CHIP C	5.0PF	B	
C179			CC73GCH1H150G	CHIP C	15PF	G	
C180			CK73GB1C104K	CHIP C	0.10UF	K	
C182			CC73GCH1HR75B	CHIP C	0.75PF	B	
C185			CC73GCH1H100D	CHIP C	10PF	D	
C186			CC73GCH1H270G	CHIP C	27PF	G	
C187			CK73GB1H471K	CHIP C	470PF	K	
C189			CC73HCH1H101J	CHIP C	100PF	J	
C190			CK73GB1H471K	CHIP C	470PF	K	
C192			CK73GB1H471K	CHIP C	470PF	K	
C193			CC73GCH1H060B	CHIP C	6.0PF	B	
C194			CC73GCH1H270G	CHIP C	27PF	G	
C197			CK73GB1H471K	CHIP C	470PF	K	
C198			CC73GCH1H090B	CHIP C	9.0PF	B	
C199			CC73GCH1H471J	CHIP C	470PF	J	
C200			CK73HB1H102K	CHIP C	1000PF	K	
C201			CC73GCH1H020B	CHIP C	2.0PF	B	
C202			CK73HB1H102K	CHIP C	1000PF	K	
C203			CC73GCH1H020B	CHIP C	2.0PF	B	
C204			CC73GCH1H050B	CHIP C	5.0PF	B	
C205			CC73GCH1H1R5B	CHIP C	1.5PF	B	
C206			CK73HB1H471K	CHIP C	470PF	K	
C207			CC73GCH1H040B	CHIP C	4.0PF	B	
C212			CK73GB1H102K	CHIP C	1000PF	K	
C213			CK73HB1H471K	CHIP C	470PF	K	
C214			CK73HB1H102K	CHIP C	1000PF	K	
C215			CC73HCH1H110J	CHIP C	11PF	J	
C216			CC73HCH1H070B	CHIP C	7.0PF	B	
C217			CK73HB1H102K	CHIP C	1000PF	K	
C218			CK73FF1C105Z	CHIP C	1.0UF	Z	
C219			CC73GCH1H010C	CHIP C	1.0PF	C	
C221,222			CK73HB1H471K	CHIP C	470PF	K	
C223			CC73GCH1H050B	CHIP C	5.0PF	B	
C224			CK73HB1H471K	CHIP C	470PF	K	
C225			CC73GCH1H470J	CHIP C	47PF	J	
C226			CC73GCH1H070B	CHIP C	7.0PF	B	
C230,231			CK73HB1H471K	CHIP C	470PF	K	

ManualsPlus.com

PARTS LIST / 零件表

TX-RX UNIT (X57-6243-00)

Ref. No.	Address	New parts	Parts No.	Description	Destination
C232			CK73GB1H471K	CHIP C 470PF K	
C234			CK73GB1H471K	CHIP C 470PF K	
C236			CC73GCH1H2R5B	CHIP C 2.5PF B	
C237			CC73GCH1H0R5B	CHIP C 0.5PF B	
C238			CK73GB1H471K	CHIP C 470PF K	
C240			CC73GCH1H160G	CHIP C 16PF G	
C244			CC73HCH1H101J	CHIP C 100PF J	
C300			CK73HB1H332K	CHIP C 3300PF K	
C301			CK73HB1A473K	CHIP C 0.047UF K	
C302			CC73HCH1H390J	CHIP C 39PF J	
C303-305			CK73HB1H471K	CHIP C 470PF K	
C306			CC73HCH1H390J	CHIP C 39PF J	
C307-309			CK73HB1C103K	CHIP C 0.010UF K	
C310			CC73HCH1H100D	CHIP C 10PF D	
C311,312			CK73HB1H471K	CHIP C 470PF K	
C313			CC73HCH1H030C	CHIP C 3.0PF C	
C314			CC73HCH1H100D	CHIP C 10PF D	
C316			CK73HB1H471K	CHIP C 470PF K	
C317			CK73HB1A104K	CHIP C 0.10UF K	
C318			C92-0560-05	CHIP-TAN 10UF 6.3WV	
C319-321			CK73HB1H471K	CHIP C 470PF K	
C322			CK73GB1H471K	CHIP C 470PF K	
C323			CK73EF1C105Z	CHIP C 1.0UF Z	
C324			C92-0623-05	CHIP TAN 22UF 4WV	
C326			CK73HB1C103K	CHIP C 0.010UF K	
C327			CK73GB1C273K	CHIP C 0.027UF K	
C328			CK73HB1H471K	CHIP C 470PF K	
C329			CK73GB1C273K	CHIP C 0.027UF K	
C331			CK73HB1H471K	CHIP C 470PF K	
C332			CK73FB1A105K	CHIP C 1.0UF K	
C333			CK73HB1A104K	CHIP C 0.10UF K	
C334			CK73FB1A105K	CHIP C 1.0UF K	
C335		*	CK73HB1A393K	CHIP C 0.039UF K	
C336			CK73GB1C104K	CHIP C 0.10UF K	
C337			CK73FB1A105K	CHIP C 1.0UF K	
C338			CK73FF1E104Z	CHIP C 0.10UF Z	
C339			CK73FF1C105Z	CHIP C 1.0UF Z	
C343,344			CK73FB1A105K	CHIP C 1.0UF K	
C347			CK73FB1A105K	CHIP C 1.0UF K	
C349,350			CK73HB1A104K	CHIP C 0.10UF K	
C352			CK73HB1H392K	CHIP C 3900PF K	
C353			CK73HB1C103K	CHIP C 0.010UF K	
C354		*	CK73HB1A683K	CHIP C 0.068UF K	
C356			CK73HB1A473K	CHIP C 0.047UF K	
C357			CK73HB1C103K	CHIP C 0.010UF K	
C358		*	CK73HB1E682K	CHIP C 6800PF K	
C359			C92-0587-05	CHIP-TAN 2.2UF 4WV	
C360			CK73HB1A473K	CHIP C 0.047UF K	
C361			CK73HB1C103K	CHIP C 0.010UF K	
C362			CK73GB1H682K	CHIP C 6800PF K	
C363		*	CK73HB1A333K	CHIP C 0.033UF K	
C365			CK73HB1H392K	CHIP C 3900PF K	
C366			CK73GB1H472K	CHIP C 4700PF K	
C367			CK73HB1C103K	CHIP C 0.010UF K	
C369			CK73FB1A105K	CHIP C 1.0UF K	
C370			CK73HB1H392K	CHIP C 3900PF K	

Ref. No.	Address	New parts	Parts No.	Description	Destination
C371			CK73HB1A104K	CHIP C 0.10UF K	
C374			CK73GB1C104K	CHIP C 0.10UF K	
C375			CK73HB1H471K	CHIP C 470PF K	
C376			C92-0560-05	CHIP-TAN 10UF 6.3WV	
C377			CK73GB1H391K	CHIP C 390PF K	
C378		*	CK73HB1E682K	CHIP C 6800PF K	
C381			CK73HB1A473K	CHIP C 0.047UF K	
C382			CK73HB1H332K	CHIP C 3300PF K	
C383			CK73HB1A104K	CHIP C 0.10UF K	
C384			C92-0560-05	CHIP-TAN 10UF 6.3WV	
C385			CC73HCH1H100D	CHIP C 10PF D	
C386			C92-0560-05	CHIP-TAN 10UF 6.3WV	
C387			CK73HB1H471K	CHIP C 470PF K	
C388			CK73GB1H102K	CHIP C 1000PF K	
C389			CC73HCH1H560J	CHIP C 56PF J	
C390		*	CK73HB1A333K	CHIP C 0.033UF K	
C391			CK73HB1C223K	CHIP C 0.022UF K	
C392			CK73HB1A473K	CHIP C 0.047UF K	
C393			C92-0507-05	CHIP-TAN 4.7UF 6.3WV	
C394		*	CK73HB1A683K	CHIP C 0.068UF K	
C395			CK73HB1H102K	CHIP C 1000PF K	
C396			CK73HB1H221K	CHIP C 220PF K	
C397			CK73HB1H471K	CHIP C 470PF K	
C398			CK73HB1A104K	CHIP C 0.10UF K	
C399			CK73GB1E393J	CHIP C 0.039UF J	
C400,401			CK73GB1C104K	CHIP C 0.10UF K	
C402			CK73HB1H471K	CHIP C 470PF K	
C403			C92-0587-05	CHIP-TAN 2.2UF 4WV	
C404			CK73GB1A474K	CHIP C 0.47UF K	
C405			CK73FB1C474K	CHIP C 0.47UF K	
C406			CC73GCH1H101J	CHIP C 100PF J	
C407			C92-0560-05	CHIP-TAN 10UF 6.3WV	
C408			CK73GB1C104K	CHIP C 0.10UF K	
C409,410			CK73GB1H471K	CHIP C 470PF K	
C411			CK73GB1C473K	CHIP C 0.047UF K	
C412			C92-0560-05	CHIP-TAN 10UF 6.3WV	
C413			CK73GB1H103K	CHIP C 0.010UF K	
C414			C92-0665-05	TANTAL 100UF 6.3WV	
C416			CK73HB1H471K	CHIP C 470PF K	
C418			CC73GCH1H221J	CHIP C 220PF J	
C420			CK73HB1H102K	CHIP C 1000PF K	
C421			CK73HB1H471K	CHIP C 470PF K	
C422			CK73HB1H102K	CHIP C 1000PF K	
C423			CK73HB1A473K	CHIP C 0.047UF K	
C424			CK73GB1H561K	CHIP C 560PF K	
TC1			C05-0383-05	CERAMIC TRIMMER CAP(6PF)	
TC2			C05-0384-05	CERAMIC TRIMMER CAP(10PF)	
TC3			C05-0383-05	CERAMIC TRIMMER CAP(6PF)	
TC5			C05-0384-05	CERAMIC TRIMMER CAP(10PF)	
36	1A	*	E29-1190-04	INTER CONNECTOR(LCD)	
37	2A	*	E37-0996-05	FLAT CABLE	
CN1			E40-5651-05	FLAT CABLE CONNECTOR	
CN2			E23-0603-05	RELAY TERMINAL(ANT)	
CN3-6		*	E23-1214-05	TERMINAL(FINAL FET)	
CN100			E40-5630-05	PIN ASSY SOCKET	
CN301			E40-5651-05	FLAT CABLE CONNECTOR	

ManualsPlus.com

PARTS LIST / 零件表

TX-RX UNIT (X57-6243-00)

Ref. No.	Address	New parts	Parts No.	Description	Destination
CN302			E40-5629-05	PIN ASSY	
CN303			E40-6166-05	FLAT CABLE CONNECTOR	
J300			E11-0457-05	PHONE JACK	
F1			F53-0217-05	FUSE	
38	1A	*	J21-8412-14	HARDWARE FIXTURE	
CF1			L72-0958-05	CERAMIC FILTER	
L1			L92-0140-05	FERRITE CHIP	
L2-4			L92-0138-05	FERRITE CHIP	
L5			L40-1005-85	SMALL FIXED INDUCTOR(10UH)	
L6,7			L92-0138-05	FERRITE CHIP	
L9			L40-5681-86	SMALL FIXED INDUCTOR(0.56UH)	
L10			L40-4781-86	SMALL FIXED INDUCTOR(0.47UH)	
L11			L40-1875-92	SMALL FIXED INDUCTOR(18NH)	
L12,13			L40-2285-92	SMALL FIXED INDUCTOR(220NH)	
L14-16			L92-0140-05	FERRITE CHIP	
L17			L40-6891-86	SMALL FIXED INDUCTOR(6.8UH)	
L18			L92-0140-05	FERRITE CHIP	
L20,21		*	L40-2278-98	SMALL FIXED INDUCTOR(22NH)	
L22			L34-4554-05	COIL	
L23			L40-6891-86	SMALL FIXED INDUCTOR(6.8UH)	
L24			L92-0140-05	FERRITE CHIP	
L25			L40-2775-92	SMALL FIXED INDUCTOR(27NH)	
L26			L40-4775-92	SMALL FIXED INDUCTOR(47NH)	
L27			L92-0140-05	FERRITE CHIP	
L28			L40-4785-85	SMALL FIXED INDUCTOR(0.47UH)	
L29			L40-2775-92	SMALL FIXED INDUCTOR(27NH)	
L30			L40-3385-85	SMALL FIXED INDUCTOR(0.33UH)	
L31			L40-6875-92	SMALL FIXED INDUCTOR(68NH)	
L33			L40-1875-92	SMALL FIXED INDUCTOR(18NH)	
L34,35			L40-1278-60	SMALL FIXED INDUCTOR(12NH)	
L36			L40-1275-92	SMALL FIXED INDUCTOR(12NH)	
L37			L92-0140-05	FERRITE CHIP	
L38		*	L41-4778-03	SMALL FIXED INDUCTOR	
L39			L40-1278-60	SMALL FIXED INDUCTOR(12NH)	
L40		*	L41-2278-03	SMALL FIXED INDUCTOR	
L42			L40-1098-76	SMALL FIXED INDUCTOR(1UH)	
L43			L92-0149-05	FERRITE CHIP	
L44			L40-1078-60	SMALL FIXED INDUCTOR(10NH)	
L45			L34-4568-05	AIR-CORE COIL	
L46			L92-0149-05	FERRITE CHIP	
L47			L40-1278-60	SMALL FIXED INDUCTOR(12NH)	
L48,49		*	L41-1578-03	SMALL FIXED INDUCTOR	
L50			L40-2285-54	SMALL FIXED INDUCTOR(220NH)	
L51			L34-4564-05	AIR-CORE COIL	
L52		*	L34-4563-05	AIR-CORE COIL	
L53			L34-4564-05	AIR-CORE COIL	
L54		*	L34-4563-05	AIR-CORE COIL	
L55			L40-1092-81	SMALL FIXED INDUCTOR	
L57			L40-6865-92	SMALL FIXED INDUCTOR(6.8NH)	
L58			L40-6891-86	SMALL FIXED INDUCTOR(6.8U)	
L59			L92-0140-05	FERRITE CHIP	
L60			L40-6891-86	SMALL FIXED INDUCTOR(6.8UH)	
L63			L40-2775-92	SMALL FIXED INDUCTOR(27NH)	
L300,301			L40-2281-86	SMALL FIXED INDUCTOR(0.22UH)	
L302			L92-0138-05	FERRITE CHIP	

Ref. No.	Address	New parts	Parts No.	Description	Destination
L303			L40-2281-86	SMALL FIXED INDUCTOR(0.22UH)	
L304,305			L92-0140-05	FERRITE CHIP	
L306			L92-0149-05	FERRITE CHIP	
L307-309			L92-0138-05	FERRITE CHIP	
X1		*	L77-1792-05	TCXO (12.8MHZ)	
X300			L77-1761-05	CRYSTAL RESONATOR(7.3728MHZ)	
X301			L78-0326-05	RESONATOR (4.19MHZ)	
XF1		*	L71-0586-05	MCF (38.85MHZ)	
CP302			R90-0718-05	MULTI-COMP 4.7K X4	
R1			RK73HB1J472J	CHIP R 4.7K J 1/16W	
R2			RK73HB1J273J	CHIP R 27K J 1/16W	
R3			R92-1252-05	CHIP R 0 OHM J 1/16W	
R4			RK73HB1J563J	CHIP R 56K J 1/16W	
R5			RK73HB1J100J	CHIP R 10 J 1/16W	
R6			R92-1368-05	CHIP R 0 OHM	
R7			RK73HB1J222J	CHIP R 2.2K J 1/16W	
R8			RK73HB1J470J	CHIP R 47 J 1/16W	
R9			RK73HB1J274J	CHIP R 270K J 1/16W	
R10			RK73HB1J222J	CHIP R 2.2K J 1/16W	
R11			RK73HB1J334J	CHIP R 330K J 1/16W	
R12,13			RK73HB1J561J	CHIP R 560 J 1/16W	
R14			RK73HB1J272J	CHIP R 2.7K J 1/16W	
R15			RK73HB1J222J	CHIP R 2.2K J 1/16W	
R16			RK73HB1J102J	CHIP R 1.0K J 1/16W	
R17			R92-1368-05	CHIP R 0 OHM	
R18			RK73GB1J101J	CHIP R 100 J 1/16W	
R19			RK73HB1J104J	CHIP R 100K J 1/16W	
R20			RK73HB1J103J	CHIP R 10K J 1/16W	
R21			RK73HB1J101J	CHIP R 100 J 1/16W	
R22			RK73HB1J473J	CHIP R 47K J 1/16W	
R23			RK73HB1J103J	CHIP R 10K J 1/16W	
R25			RK73GB1J100J	CHIP R 10 J 1/16W	
R26			RK73HB1J104J	CHIP R 100K J 1/16W	
R28			RK73HB1J122J	CHIP R 1.2K J 1/16W	
R29			RK73GB1J103J	CHIP R 10K J 1/16W	
R30			RK73HB1J332J	CHIP R 3.3K J 1/16W	
R31			RK73HB1J472J	CHIP R 4.7K J 1/16W	
R32			RK73HB1J153J	CHIP R 15K J 1/16W	
R33			RK73HB1J473J	CHIP R 47K J 1/16W	
R34			RK73HB1J154J	CHIP R 150K J 1/16W	
R36			RK73HB1J102J	CHIP R 1.0K J 1/16W	
R37			RK73HB1J681J	CHIP R 680 J 1/16W	
R38,39			RK73HB1J181J	CHIP R 180 J 1/16W	
R40			RK73HB1J102J	CHIP R 1.0K J 1/16W	
R41,42			RK73HB1J101J	CHIP R 100 J 1/16W	
R43			RK73HB1J124J	CHIP R 120K J 1/16W	
R44			RK73HB1J472J	CHIP R 4.7K J 1/16W	
R45			RK73HB1J124J	CHIP R 120K J 1/16W	
R46			RK73HB1J104J	CHIP R 100K J 1/16W	
R47			RK73GB1J561J	CHIP R 560 J 1/16W	
R48			RK73HB1J101J	CHIP R 100 J 1/16W	
R49			RK73HB1J102J	CHIP R 1.0K J 1/16W	
R50			RK73HB1J332J	CHIP R 3.3K J 1/16W	
R51			RK73HB1J562J	CHIP R 5.6K J 1/16W	
R52			RK73HB1J271J	CHIP R 270 J 1/16W	
R53			RK73HB1J103J	CHIP R 10K J 1/16W	

ManualsPlus.com

PARTS LIST / 零件表

TX-RX UNIT (X57-6243-00)

Ref. No.	Address	New parts	Parts No.	Description				Destination
R54			RK73HB1J332J	CHIP R	3.3K	J	1/16W	
R55			RK73GB1J561J	CHIP R	560	J	1/16W	
R56			RK73HB1J470J	CHIP R	47	J	1/16W	
R57			RK73HB1J100J	CHIP R	10	J	1/16W	
R58			RK73HB1J102J	CHIP R	1.0K	J	1/16W	
R59			RK73HB1J332J	CHIP R	3.3K	J	1/16W	
R60			RK73HB1J181J	CHIP R	180	J	1/16W	
R61			RK73HB1J102J	CHIP R	1.0K	J	1/16W	
R62			R92-1368-05	CHIP R	0 OHM			
R63			R92-1252-05	CHIP R	0 OHM	J	1/16W	
R64			RK73HB1J473J	CHIP R	47K	J	1/16W	
R65			RK73HB1J562J	CHIP R	5.6K	J	1/16W	
R67,68			RK73HB1J473J	CHIP R	47K	J	1/16W	
R69			RK73HB1J181J	CHIP R	180	J	1/16W	
R70			RK73HB1J102J	CHIP R	1.0K	J	1/16W	
R72			RK73HB1J330J	CHIP R	33	J	1/16W	
R77			RK73HB1J104J	CHIP R	100K	J	1/16W	
R78			RK73HB1J822J	CHIP R	8.2K	J	1/16W	
R79			RK73GB1J220J	CHIP R	22	J	1/16W	
R80			RK73GB1J102J	CHIP R	1.0K	J	1/16W	
R81			RK73HB1J104J	CHIP R	100K	J	1/16W	
R83			R92-1252-05	CHIP R	0 OHM	J	1/16W	
R84			R92-1368-05	CHIP R	0 OHM			
R85			RK73HB1J104J	CHIP R	100K	J	1/16W	
R88			RK73GB1J122J	CHIP R	1.2K	J	1/16W	
R89			RK73GB1J683J	CHIP R	68K	J	1/16W	
R90			RK73HB1J101J	CHIP R	100	J	1/16W	
R91			RK73GB1J152J	CHIP R	1.5K	J	1/16W	
R92			RK73HB1J821J	CHIP R	820	J	1/16W	
R96			R92-1368-05	CHIP R	0 OHM			
R97			RK73HB1J121J	CHIP R	120	J	1/16W	
R98			RK73HB1J224J	CHIP R	220K	J	1/16W	
R99			RK73GB1J473J	CHIP R	47K	J	1/16W	
R101			RK73GB1J823J	CHIP R	82K	J	1/16W	
R102			R92-1252-05	CHIP R	0 OHM	J	1/16W	
R103			RK73HB1J153J	CHIP R	15K	J	1/16W	
R105			RK73HB1J104J	CHIP R	100K	J	1/16W	
R106			RK73GB1J470J	CHIP R	47	J	1/16W	
R108			RK73GB1J102J	CHIP R	1.0K	J	1/16W	
R110			RK73EB2ER39K	CHIP R	0.39	K	1/4W	
R112			RK73HB1J104J	CHIP R	100K	J	1/16W	
R113,114			RK73EB2ER39K	CHIP R	0.39	K	1/4W	
R115			RK73HB1J104J	CHIP R	100K	J	1/16W	
R116,117			RK73GH1J154D	CHIP R	150K	D	1/16W	
R118			RK73HB1J104J	CHIP R	100K	J	1/16W	
R119-122			RK73GH1J154D	CHIP R	150K	D	1/16W	
R123			R92-0670-05	CHIP R	0 OHM			
R124,125			RK73GB1J271J	CHIP R	270	J	1/16W	
R126			RK73GB1J103J	CHIP R	10K	J	1/16W	
R127			RK73HB1J273J	CHIP R	27K	J	1/16W	
R128			RK73GB1J102J	CHIP R	1.0K	J	1/16W	
R129			RK73HB1J563J	CHIP R	56K	J	1/16W	
R130			RK73HB1J105J	CHIP R	1.0M	J	1/16W	
R135			R92-1252-05	CHIP R	0 OHM	J	1/16W	
R137			RK73HB1J102J	CHIP R	1.0K	J	1/16W	
R144			RK73GB1J102J	CHIP R	1.0K	J	1/16W	

Ref. No.	Address	New parts	Parts No.	Description				Destination
R145,146			RK73HB1J104J	CHIP R	100K	J	1/16W	
R151			RK73GB1J333J	CHIP R	33K	J	1/16W	
R152			R92-0670-05	CHIP R	0 OHM			
R153			RK73HB1J101J	CHIP R	100	J	1/16W	
R154			R92-1368-05	CHIP R	0 OHM			
R155-158			RK73HB1J103J	CHIP R	10K	J	1/16W	
R300			RK73GB1J103J	CHIP R	10K	J	1/16W	
R301			RK73HB1J103J	CHIP R	10K	J	1/16W	
R302			RK73HB1J473J	CHIP R	47K	J	1/16W	
R303			RK73HB1J103J	CHIP R	10K	J	1/16W	
R304			RK73HB1J102J	CHIP R	1.0K	J	1/16W	
R305			RK73HB1J331J	CHIP R	330	J	1/16W	
R306			RK73HB1J100J	CHIP R	10	J	1/16W	
R307			RK73HB1J564J	CHIP R	560K	J	1/16W	
R308			RK73HB1J472J	CHIP R	4.7K	J	1/16W	
R309			RK73GB1J272J	CHIP R	2.7K	J	1/16W	
R311			RK73HB1J103J	CHIP R	10K	J	1/16W	
R312			R92-1368-05	CHIP R	0 OHM			
R313			RK73HB1J104J	CHIP R	100K	J	1/16W	
R314-317			RK73HB1J102J	CHIP R	1.0K	J	1/16W	
R318			RK73HB1J104J	CHIP R	100K	J	1/16W	
R319-321			RK73HB1J102J	CHIP R	1.0K	J	1/16W	
R322			RK73HB1J104J	CHIP R	100K	J	1/16W	
R323			RK73HB1J103J	CHIP R	10K	J	1/16W	
R324			RK73GB1J272J	CHIP R	2.7K	J	1/16W	
R325			RK73HB1J100J	CHIP R	10	J	1/16W	
R326			RK73HB1J103J	CHIP R	10K	J	1/16W	
R327,328			RK73HB1J221J	CHIP R	220	J	1/16W	
R329			RK73HB1J223J	CHIP R	22K	J	1/16W	
R330			RK73HB1J104J	CHIP R	100K	J	1/16W	
R331			RK73HB1J222J	CHIP R	2.2K	J	1/16W	
R332			RK73HB1J104J	CHIP R	100K	J	1/16W	
R333			RK73HB1J473J	CHIP R	47K	J	1/16W	
R334,335			RK73HB1J102J	CHIP R	1.0K	J	1/16W	
R336			RK73HB1J473J	CHIP R	47K	J	1/16W	
R337			RK73HB1J153J	CHIP R	15K	J	1/16W	
R338			RK73HB1J334J	CHIP R	330K	J	1/16W	
R339,340			RK73GB1J221J	CHIP R	220	J	1/16W	
R341			RK73HB1J102J	CHIP R	1.0K	J	1/16W	
R342			RK73HB1J274J	CHIP R	270K	J	1/16W	
R343			RK73HB1J473J	CHIP R	47K	J	1/16W	
R344			RK73HB1J100J	CHIP R	10	J	1/16W	
R345			RK73HB1J562J	CHIP R	5.6K	J	1/16W	
R346			RK73HB1J334J	CHIP R	330K	J	1/16W	
R347			R92-1252-05	CHIP R	0 OHM	J	1/16W	
R348			RK73HB1J102J	CHIP R	1.0K	J	1/16W	
R349			RK73HB1J331J	CHIP R	330	J	1/16W	
R350			R92-0670-05	CHIP R	0 OHM			
R351			RK73HB1J224J	CHIP R	220K	J	1/16W	
R352			RK73HB1J104J	CHIP R	100K	J	1/16W	
R353			RK73HB1J472J	CHIP R	4.7K	J	1/16W	
R354			RK73HB1J102J	CHIP R	1.0K	J	1/16W	
R356			RK73HB1J103J	CHIP R	10K	J	1/16W	
R357			RK73HB1J682J	CHIP R	6.8K	J	1/16W	
R358			RK73HB1J472J	CHIP R	4.7K	J	1/16W	
R359			RK73HB1J561J	CHIP R	560	J	1/16W	

ManualsPlus.com

PARTS LIST / 零件表

TX-RX UNIT (X57-6243-00)

Ref. No.	Address	New parts	Parts No.	Description	Destination
R360			RK73HB1J823J	CHIP R 82K J 1/16W	
R361			RK73HB1J103J	CHIP R 10K J 1/16W	
R362			RK73HB1J333J	CHIP R 33K J 1/16W	
R363			RK73HB1J102J	CHIP R 1.0K J 1/16W	
R364			RK73HB1J272J	CHIP R 2.7K J 1/16W	
R365			RK73HB1J332J	CHIP R 3.3K J 1/16W	
R366			RK73HB1J103J	CHIP R 10K J 1/16W	
R367			RK73HB1J332J	CHIP R 3.3K J 1/16W	
R368			RK73HB1J103J	CHIP R 10K J 1/16W	
R369			R92-1368-05	CHIP R 0 OHM	
R370			RK73HB1J102J	CHIP R 1.0K J 1/16W	
R371			RK73GB1J272J	CHIP R 2.7K J 1/16W	
R372			RK73HB1J101J	CHIP R 100 J 1/16W	
R373			RK73HB1J272J	CHIP R 2.7K J 1/16W	
R374			RK73GB1J821J	CHIP R 820 J 1/16W	
R375			R92-1368-05	CHIP R 0 OHM	
R376			RK73GB1J333J	CHIP R 33K J 1/16W	
R377			RK73GB1J823J	CHIP R 82K J 1/16W	
R378			RK73HB1J124J	CHIP R 120K J 1/16W	
R379			RK73HB1J683J	CHIP R 68K J 1/16W	
R380			RK73GB1J821J	CHIP R 820 J 1/16W	
R381			RK73HB1J223J	CHIP R 22K J 1/16W	
R382			RK73HB1J332J	CHIP R 3.3K J 1/16W	
R383,384			R92-1368-05	CHIP R 0 OHM	
R385			RK73HB1J105J	CHIP R 1.0M J 1/16W	
R386			RK73HB1J562J	CHIP R 5.6K J 1/16W	
R387			RK73HB1J392J	CHIP R 3.9K J 1/16W	
R388			RK73HB1J124J	CHIP R 120K J 1/16W	
R389			RK73HB1J102J	CHIP R 1.0K J 1/16W	
R390			RK73GH1J913D	CHIP R 91K D 1/16W	
R391			RK73HB1J393J	CHIP R 39K J 1/16W	
R392			RK73HB1J102J	CHIP R 1.0K J 1/16W	
R393			RK73HB1J222J	CHIP R 2.2K J 1/16W	
R394			RK73HB1J183J	CHIP R 18K J 1/16W	
R395			RK73HB1J274J	CHIP R 270K J 1/16W	
R396			RK73HB1J333J	CHIP R 33K J 1/16W	
R397,398			RK73HB1J474J	CHIP R 470K J 1/16W	
R399			RK73HB1J274J	CHIP R 270K J 1/16W	
R400			RK73HB1J332J	CHIP R 3.3K J 1/16W	
R401			RK73HB1J683J	CHIP R 68K J 1/16W	
R402,403			RK73HB1J563J	CHIP R 56K J 1/16W	
R404			RK73HB1J332J	CHIP R 3.3K J 1/16W	
R405			RK73HB1J153J	CHIP R 15K J 1/16W	
R406			R92-1368-05	CHIP R 0 OHM	
R407			RK73HB1J124J	CHIP R 120K J 1/16W	
R408			RK73GB1J223J	CHIP R 22K J 1/16W	
R409			RK73HB1J563J	CHIP R 56K J 1/16W	
R410			RK73HB1J105J	CHIP R 1.0M J 1/16W	
R411			RK73HB1J103J	CHIP R 10K J 1/16W	
R412			RK73HB1J473J	CHIP R 47K J 1/16W	
R413			RK73HB1J562J	CHIP R 5.6K J 1/16W	
R414			RK73HB1J183J	CHIP R 18K J 1/16W	
R415			RK73GB1J474J	CHIP R 470K J 1/16W	
R416			RK73HB1J222J	CHIP R 2.2K J 1/16W	
R417			RK73GB1J183J	CHIP R 18K J 1/16W	
R418			RK73HB1J102J	CHIP R 1.0K J 1/16W	

Ref. No.	Address	New parts	Parts No.	Description	Destination
R419			RK73HB1J272J	CHIP R 2.7K J 1/16W	
R420			RK73HB1J823J	CHIP R 82K J 1/16W	
R421			R92-0670-05	CHIP R 0 OHM	
R422,423			RK73HB1J103J	CHIP R 10K J 1/16W	
R424			RK73HB1J563J	CHIP R 56K J 1/16W	
R425			RK73HB1J153J	CHIP R 15K J 1/16W	
R426			RK73HB1J184J	CHIP R 180K J 1/16W	
R427			RK73HB1J104J	CHIP R 100K J 1/16W	
R430			RK73HB1J182J	CHIP R 1.8K J 1/16W	
R431			RK73HB1J332J	CHIP R 3.3K J 1/16W	
R432			RK73GB1J682J	CHIP R 6.8K J 1/16W	
R433			RK73HB1J102J	CHIP R 1.0K J 1/16W	
R434			RK73GB1J333J	CHIP R 33K J 1/16W	
R436			RK73HB1J222J	CHIP R 2.2K J 1/16W	
R437			RK73HB1J124J	CHIP R 120K J 1/16W	
R438			RK73HB1J473J	CHIP R 47K J 1/16W	
R439			RK73HB1J104J	CHIP R 100K J 1/16W	
R440			R92-1368-05	CHIP R 0 OHM	
R441			RK73HB1J563J	CHIP R 56K J 1/16W	
R442			RK73HB1J154J	CHIP R 150K J 1/16W	
R443			RK73HB1J823J	CHIP R 82K J 1/16W	
R444			RK73HB1J105J	CHIP R 1.0M J 1/16W	
R445			RK73HB1J103J	CHIP R 10K J 1/16W	
R446			RK73HB1J102J	CHIP R 1.0K J 1/16W	
R447			RK73GB1J683J	CHIP R 68K J 1/16W	
R448			RK73HB1J473J	CHIP R 47K J 1/16W	
R449			RK73HB1J222J	CHIP R 2.2K J 1/16W	
R450			RK73HB1J101J	CHIP R 100 J 1/16W	
R451			RK73HB1J392J	CHIP R 3.9K J 1/16W	
R452			R92-0670-05	CHIP R 0 OHM	
R453			RK73GB1J101J	CHIP R 100 J 1/16W	
R454			RK73HB1J821J	CHIP R 820 J 1/16W	
R455			RK73GB1J474J	CHIP R 470K J 1/16W	
R456			RK73GB1J392J	CHIP R 3.9K J 1/16W	
R457			RK73GB1J100J	CHIP R 10 J 1/16W	
R458			RK73HB1J182J	CHIP R 1.8K J 1/16W	
R459			RK73HB1J471J	CHIP R 470 J 1/16W	
R460			RK73HB1J563J	CHIP R 56K J 1/16W	
R462			RK73HB1J333J	CHIP R 33K J 1/16W	
R464			RK73HB1J101J	CHIP R 100 J 1/16W	
R466			R92-1252-05	CHIP R 0 OHM J 1/16W	
R467,468			RK73HB1J473J	CHIP R 47K J 1/16W	
R469			R92-1252-05	CHIP R 0 OHM J 1/16W	
R470,471			RK73HB1J473J	CHIP R 47K J 1/16W	
R477			RK73HB1J103J	CHIP R 10K J 1/16W	
VR1			R12-7491-05	TRIMMING POT.(68K)	
VR301			R12-7491-05	TRIMMING POT.(68K)	
VR302			R32-0647-05	SEMI FIXED VARIABLE RESISTOR	
VR303			R12-7487-05	TRIMMING POT.(15K)	
S100			S40-1117-05	TACT SWITCH	
S300		*	S60-0419-05	ROTARY SWITCH	
D1			MA742	DIODE	
D2			MA2S111	DIODE	
D3			1SR154-400	DIODE	
D6,7			MA2S376	VARIABLE CAPACITANCE DIODE	
D9			MA2S376	VARIABLE CAPACITANCE DIODE	

ManualsPlus.com

PARTS LIST / 零件表

TX-RX UNIT (X57-6243-00)

Ref. No.	Address	New parts	Parts No.	Description	Destination
D11			MA2S376	VARIABLE CAPACITANCE DIODE	
D12			MA360	VARIABLE CAPACITANCE DIODE	
D13			MA2S111	DIODE	
D14,15			HSC277	DIODE	
D16-18			HVC350B	VARIABLE CAPACITANCE DIODE	
D19			HZU5ALL	DIODE	
D21,22			HVC350B	VARIABLE CAPACITANCE DIODE	
D23			HVC355B	VARIABLE CAPACITANCE DIODE	
D24			HVC131	DIODE	
D25,26			HSC277	DIODE	
D27			HVC131	DIODE	
D28			MA2S111	DIODE	
D301			MA742	DIODE	
D302			KDZ4.7EV	ZENER DIODE	
D306			DA221	DIODE	
D307			1SS372	DIODE	
D308			DAN222	DIODE	
D309		*	KDZ3.0V	ZENER DIODE	
IC1			MB15E03SL	MOS IC	
IC2			TA31136FN	MOS IC	
IC3			NJM2904V	MOS IC	
IC300		*	M38267M8L271GP	MPU	
IC301			LC73881M	MOS IC	
IC302			AT24C16N-10SI	ROM IC	
IC302		*	24LC16BT-I/SN	ROM IC	
IC303			PST9145NR	MOS IC	
IC304			PST9124NR	MOS IC	
IC305		*	XC62FP3502P	MOS IC	
IC306			NJM2902V	MOS IC	
IC307			NJM2904V	MOS IC	
IC308			NJM2902V	MOS IC	
IC309			KIA6278F	BI-POLAR IC	
Q1			2SC4738(GR)	TRANSISTOR	
Q2		*	KTC4082	TRANSISTOR	
Q3			2SC5108(Y)	TRANSISTOR	
Q4,5			2SC5066(O)	TRANSISTOR	
Q6			KTC4082	TRANSISTOR	
Q7			2SC5108(Y)	TRANSISTOR	
Q8			2SJ243	FET	
Q9		*	KRX102U	TRANSISTOR	
Q10			2SC4617(S)	TRANSISTOR	
Q11			2SC5108(Y)	TRANSISTOR	
Q12		*	3SK320	FET	
Q13			2SC5108(Y)	TRANSISTOR	
Q14			DTC114TE	DIGITAL TRANSISTOR	
Q15			2SC4988	TRANSISTOR	
Q17			2SK1824	FET	
Q18		*	2SK3475	FET	
Q20			3SK274	FET	
Q22		*	2SK3476	FET	
Q23			DTA144EE	DIGITAL TRANSISTOR	
Q24			DTC144EUA	DIGITAL TRANSISTOR	
Q300-302			DTC114EE	DIGITAL TRANSISTOR	
Q303			DTC114YE	DIGITAL TRANSISTOR	
Q304			DTA123JE	DIGITAL TRANSISTOR	
Q305			UMG3N	TRANSISTOR	

Ref. No.	Address	New parts	Parts No.	Description	Destination
Q306			UPA672T	FET	
Q307			FP210	TRANSISTOR	
Q308			UMG3N	TRANSISTOR	
Q309			DTA123JE	DIGITAL TRANSISTOR	
Q310			KTA1298(Y)	TRANSISTOR	
Q311			UMG3N	TRANSISTOR	
Q312			DTC144EE	DIGITAL TRANSISTOR	
Q313			2SK1824	FET	
Q314			2SC4617(S)	TRANSISTOR	
Q315			DTC114EE	DIGITAL TRANSISTOR	
Q316			DTA144EE	DIGITAL TRANSISTOR	
Q317			2SC4738(GR)	TRANSISTOR	
Q318			2SK1824	FET	
Q319			DTA144EE	DIGITAL TRANSISTOR	
Q320			DTC144EE	DIGITAL TRANSISTOR	
Q321			KTA1298(Y)	TRANSISTOR	
Q322			2SC4919	TRANSISTOR	
Q323			DTC144EE	DIGITAL TRANSISTOR	
Q324			2SK1588	FET	
Q325			DTA123JE	DIGITAL TRANSISTOR	
TH1			157-503-65001	THERMISTOR	
TH301			157-303-65001	THERMISTOR	
TH302			157-102-65001	THERMISTOR	
S301		*	W02-3614-05	ENCODER	

ManualsPlus.com

EXPLODED VIEW / 部件分解图

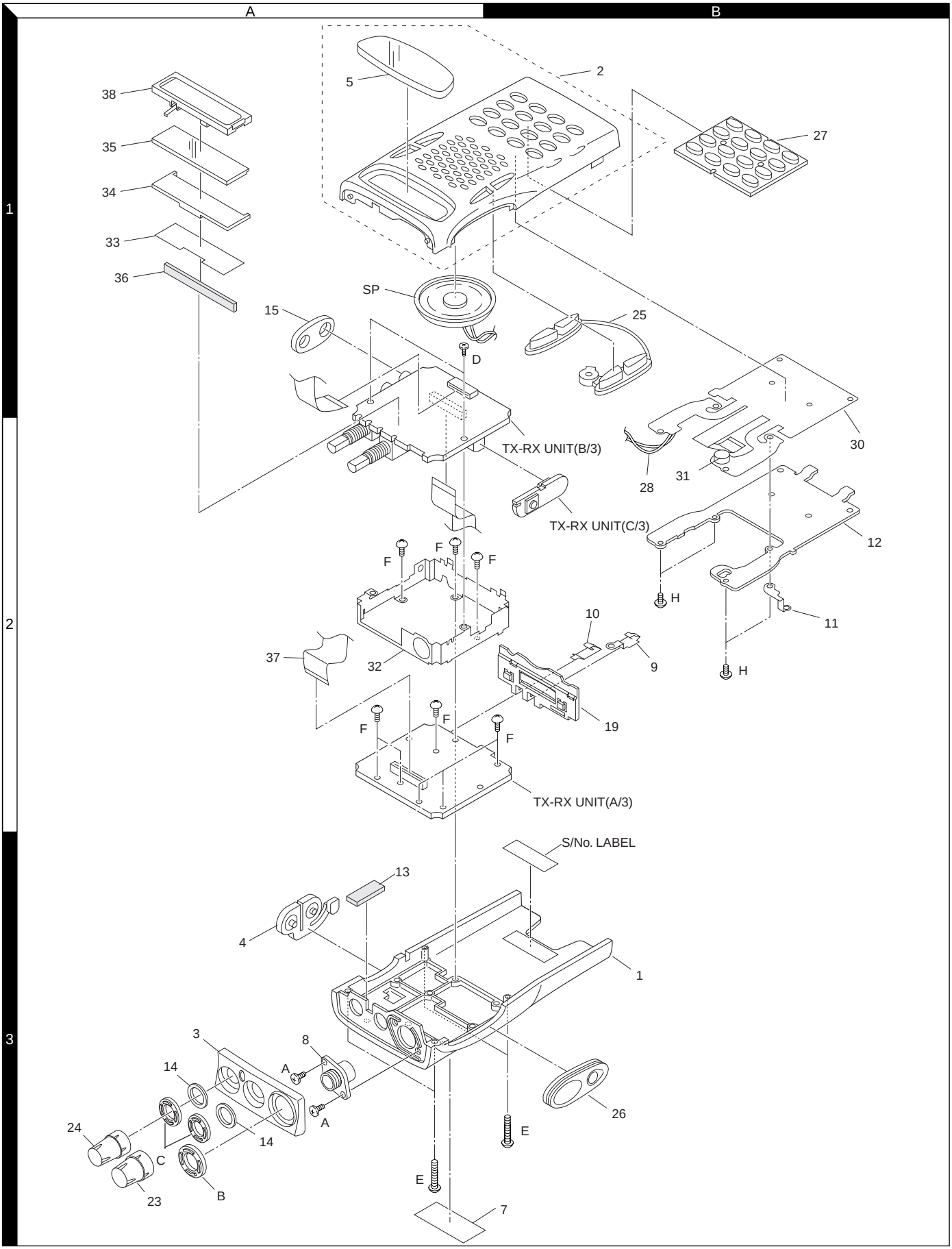

Parts with exploded numbers larger than 700 are not supplied.

ManualsPlus.com

PACKING / 包装

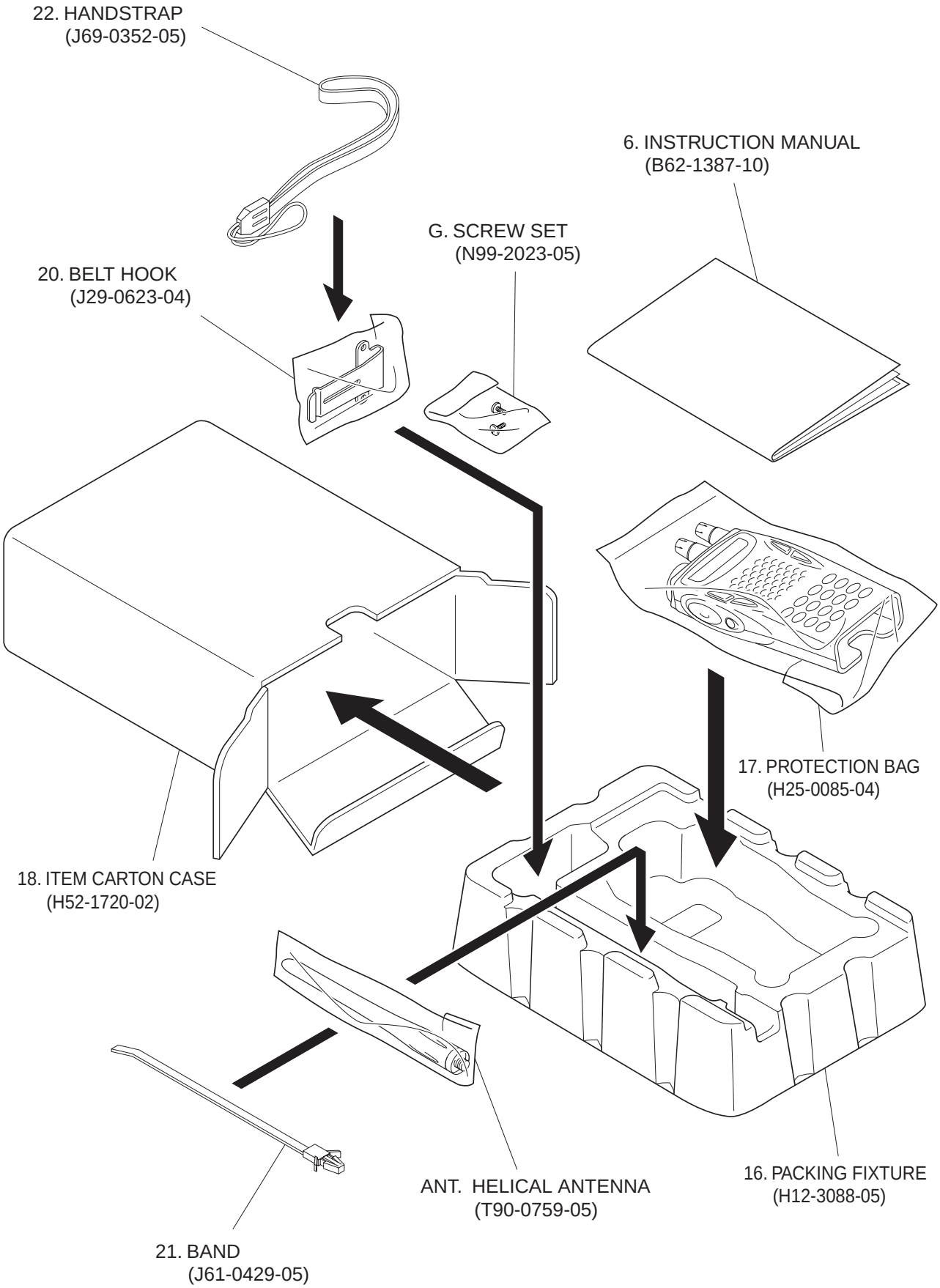

ManualsPlus.com

ADJUSTMENT / 调整

Required Test Equipment

1. Stabilized Power supply
1. The supply voltage can be changed between 5V and 9V, and the current is 3A or more.
2. The standard voltage is 7.5V.

2. DC Ammeter
1. Class 1 ammeter (17 ranges and other features).
2. The full scale can be set to either 300mA or 3A.
3. A cable of less internal loss must be used.

3. Frequency Counter (f. counter)
1. Frequencies of up to 1GHz or so can be measured.
2. The sensitivity can be changed to 500MHz or below, and measurements are highly stable and accurate (0.2ppm or so).

4. Power Meter
1. Measurable frequency : Up to 500MHz
2. Impedance : 50Ω, unbalanced
3. Measuring range : Full scale of 10W or so
4. A standard cable (5D2W 1m) must be used.

5. RF Voltmeter(RF V.M)
1. Measurable frequency : Up to 500MHz or so.

6. Linear Detector
1. Measurable frequency : Up to 500MHz or so
2. Characteristics are flat, and CN is 60dB or more.

7. Digital Voltmeter
1. Voltage range : FS=18V or so
2. Input resistance : 1MΩ or more

8. Oscilloscope
1. Measuring range : DC to 30MHz
2. Provides highly accurate measurements for 5 to 25MHz.

9. AF Voltmeter (AF V.M)
1. Measurable frequency : 50Hz to 1MHz
2. Maximum sensitivity : 1mV or more

10. Spectrum Analyzer
1. Measuring range : DC to 1GHz or more

11. Standard Signal Generator (SSG)
1. Maximum frequency : 500MHz or more
2. Output : -133dBm/0.05μV to 7dBm/501mV
3. Output impedance : 50Ω

12. Tracking Generator
1. Center frequency : 50kHz to 500MHz
2. Frequency deviation : ±35MHz
3. Output voltage : 100mV or more

13. Dummy Load
1. 8Ω, 3W or more

14. AF Generator(AG)
1. Frequency range : 100Hz to 100kHz
2. Output : 0.5mV to 1V

15. Distortion Meter
1. Measurable frequency : 30Hz to 100kHz
2. Input level : 50mV to 10Vrms

所需的测试设备

1. 稳定电源
1. 输出电源在5V和9V之间可调，并且电流为3A或更大。
2. 标准电压为7.5V。

2. 电流表
1. 高级电流表 (17档和其他功能)。
2. 满刻度可设定为300mA也可设定为3A。
3. 必须使用低损耗电缆。

3. 频率计数器 (f.counter)
1. 可以测量到最大量程大约为1GHz的频率。
2. 灵敏度可调到500MHz或更低，测量为高稳定性和高准确度(大约为0.2ppm)。

4. 功率仪
1. 可测量的频率：最高到500MHz
2. 阻抗：50Ω，不稳定
3. 测量范围：满刻度大约为10W。
4. 必须使用标准电缆 (5D2W 1m)。

5. 射频电压表 (RF V.M)
1. 频率范围：最高大约到500MHz。

6. 线性检测器
1. 频率范围：最高大约到500MHz。
2. 特征函数是平展的，CN为60dB或更大。

7. 数字电压表
1. 电压范围：大约FS＝18V。
2. 输入阻抗值：1MΩ或更大。

8. 示波器
1. 测量范围：直流到30MHz
2. 5到25MHz间提供高准确度测量。

9. 音频电压表 (AF V.M)
1. 频率范围：50Hz到1MHz
2. 最高灵敏度：1mV或更高

10.频谱分析仪
1. 测量范围：直流到1GHz或更大

11.标准信号发射器 (SSG)
1. 最高频率：500MHz或更高
2. 输出：－133dBm/0.05μV到7dBm/501mV
3. 输出阻抗：50Ω

12.轨迹发生器
1. 中心频率：50kHz到500MHz
2. 频偏：±35MHz
3. 输出电压：100mV或更高

13.假负载
1. 8Ω，3W或更高

14.音频发生器 (AG)
1. 频率范围：100Hz到100kHz
2. 输出：0.5mV到1V

15.失真测试仪
1. 频率范围：30Hz到100kHz
2. 输入电平：50mV到10Vrms

ManualsPlus.com

ADJUSTMENT / 调整

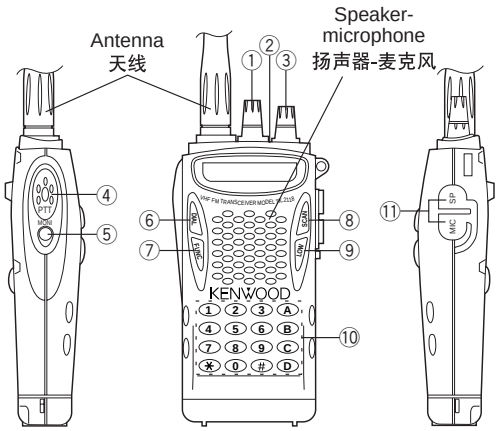

① Power / Volume switch
② LED indicator
③ Channel switch
④ PTT switch
⑤ MONI key
⑥ DIAL key
⑦ FUNC key
⑧ SCAN key
⑨ LOW key
⑩ DTMF key
⑪ SP/MIC JAC

① 电源／音量控制器
② LED指示灯
③ 旋转编码器
④ PTT（按下通话）开关
⑤ MONI（监听器）键
⑥ DIAL（拨号）键
⑦ FUNC（功能）键
⑧ SCAN（扫描）键
⑨ LOW键
⑩ DTMF（双音多频）键盘
⑪ MIC-SP插孔

- Use a non-conductive rod such as a Ceramic rod for adjustment (especially of trimmers and coils).
  Kenwood order No. A-0910 (0.4X0.9mm)
  Kenwood order No. A-1310 (0.4X1.3mm)
- To protect the SSG,do not send out signals while adjusting the receiving unit.
- The indicated SSG output levels are for maximum output.

- 使用一个专用调整棒进行调整（特别是微调电容器和线圈）。
  建伍订货单号码 A-0910 (0.4X0.9mm)
  建伍订货单号码 A-1310 (0.4X1.3mm)
- 为了保护标准信号发生器，在调整接收部分时通信机不要发射。
- 显示的标准信号发生器输出电平为最大输出值。

Adjustment point

TX-RX A/3 Component side

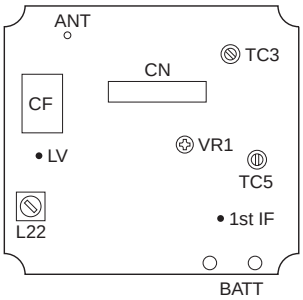

TX-RX B/3
Component side

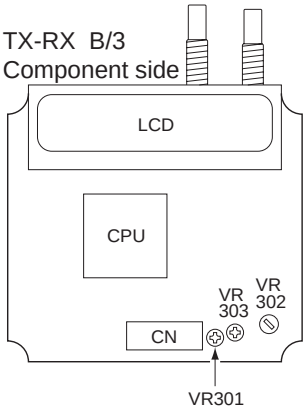

TX-RX A/3 Foil side

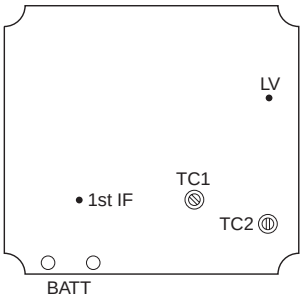

Componennt Side View

VR1:	**Frequency adjustment**
TC3:	**Band-pass filter waveform adjustment**
TC5:	**Band-pass filter waveform adjustment**
L22:	**AF level adjustment**
LV:	**Lock voltage adjustment terminal**
1st IF:	**Band-pass filter test point**
VR301:	**DQT waveform adjustment**
VR302:	**Deviation adjustment**
VR303:	**DTMF deviation adjustment**

VR1:	频率调整
TC3:	带通滤波器波形调整
TC5:	带通滤波器波形调整
L22:	音频电平调整
LV:	锁定电压调整终端
1st:	带通滤波器测试点
VR301:	DQT波形调整
VR302:	DEV调整
VR303:	DTMF DEV调整

Foil Side View

TC1:	**Transmit lock voltage adjustment**
TC2:	**Receive lock voltage adjustment**

TC1:	发射锁定电压调整
TC2:	接收锁定电压调整

Notes:

- Adjust the TX VCO trimmer within a short period of time (Appros. 10 seconds). When the transceiver is in TX mode and the final amplifier transistor is detached from the chassis for a long time, it may cause thermal damage to the transistor (No heatsink).

注释:

- 在短时间内调整发射压控微调电容器（大约10秒）。当收发机处于发射模式，并且末级放大器晶体管长时间从机架拔出时，则可能会对晶体管产生热损伤（无散热器）。

ManualsPlus.com

ADJUSTMENT / 调整

Replacing Q22 (FET TX final)

1. Place Q22 in its location, upside down as shown in figure 1. Make sure the location of each pin is correct. The bevelled edge is located between pin 1 and 2. (See the figure below) Replace the heat conductor sheet (G11-2664-x4) when replacing Q22.

重置Q22 (FET 发射终端)

1. 如图1所示，将Q22上下颠倒放在它的对应位置。
   每个管脚的位置一定要正确。斜角位于管脚1与管脚2之间。（如下图所示）
   当置换Q22时，重置热导膜（G11-2664-x4）。

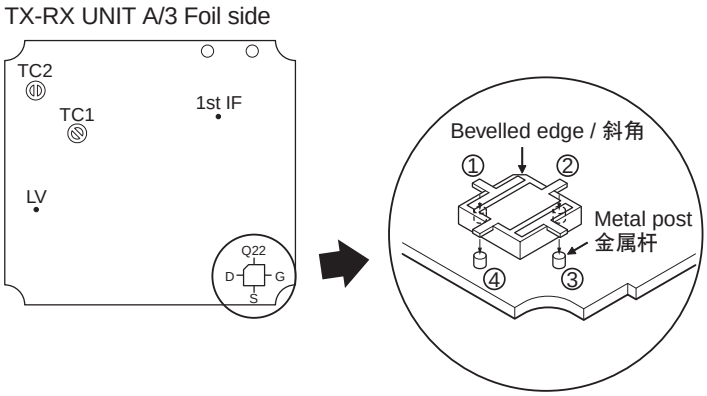

Fig. 1 / 图1

2. The bottom surface of Q22 must be firmly contacted to the TX-RX PCB.
   Solder each pin onto the top of the metal posts. Make sure the solder is between the pin and the metal post (Refer to figure 2).

2. Q22的底部表面必须与发射-接收PCB紧密结合。
   将每个管脚与金属杆的顶端焊接起来。焊剂必须位于管脚与金属杆之间。（参见图2）

Note:

- Make sure you are properly grounded while soldering the Q22.
- Avoid adding excess solder to the metal post.
- Make sure the bottom surface of Q22 is firmly contacted to the TX-RX PCB.
- The metal posts for the pins are also soldered to the PCB. So, when you solder the Q22 pins to the metal posts, keep the soldering time as short as possible so that the posts are not moved.

注释：

- 当焊接Q22时一定要将焊剂碾磨恰当。
- 避免向金属杆添加过多焊剂。
- Q22的底部表面一定要与发射-接收PCB紧密结合。
- 管脚所对应的金属杆也要与PCB焊接在一起。
  所以，将Q22管脚与金属杆焊接起来时，尽可能使焊接时间越短越好，这样金属杆不易被移动。

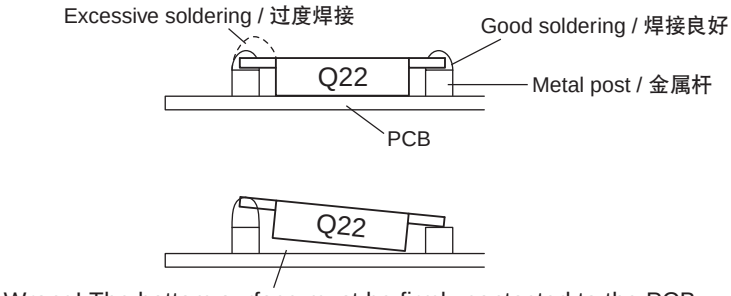

Wrong! The bottom surface must be firmly contacted to the PCB.
错误！底部表面必须与PCB紧密结合。

Fig. 2 / 图2

ManualsPlus.com

ADJUSTMENT

Use the KPG-69D programming software for adjustment of the next item in PC MODE (see page 10).
Squelch Level, S meter Level, Lo Power, QT Deviation, DQT Deviation, and Battery warning.

Section common to the transmitter and receiver (VCO)

Item	Condition	Measurement		Adjustment		Specifications/ Remarks
		Test equipment	Terminal	Parts	Method	
1. Setting	1) Power supply voltage Battery teriminal:7.5V					
2. VCO lock voltage	1) CH: TX low	Digital voltmeter	CV	TC1	1.0V	±0.1V
	2) CH: RX low			TC2	1.0V	±0.1V
	3) CH: TX high					less than 4.5V
	4) CH: RX high					

Receiver Section

Item	Condition	Measurement		Adjustment		Specifications/ Remarks
		Test equipment	Terminal	Parts	Method	
1. Band-pass filter	1) CH: RX center	Tra generator Spectrum analyzer		TC3,TC5	Adjust the spectram waveform shown Fig1	
2. AF level	1) CH: RX center SSG output: -53dBm(501μV) MOD: 1kHz DEV: ±3.0kHz	SSG Oscilloscope AF. V. M Distortion meter	ANT SP	L22	Adjust to the MAX AF level Vol. knob position at 12 o'clock	
3. Sensitivity	1) CH: RX center CH: low CH: high SSG ouput: -116dBm(0.35μV) MOD: 1kHz DEV: ±3.0kHz				Check	SINAD: 12dB or higher
4. Squelch Level (PC Mode)	1) CH: RX center			PC key		
	2) Level 9 SSG output: -116dBm(0.35μV)				Adjust to open the squelch.	
	3) Level 1 SSG output: -123dBm(0.16μV)				Adjust to open the squelch.	
5. S meter Level (PC Mode)	1) CH: RX center	SSG	ANT	PC key		
	2) Full digit SSG output: -110dBm(0.7μV)				Adjust to Full digit	
	3) one Digit SSG output: -120dBm(0.2μV)				Adjust to one digit	

Transmitter section

Item	Condition	Measurement		Adjustment		Specifications/ Remarks
		Test equipment	Terminal	Parts	Method	
1. Transmit frequency	1) CH: TX center PTT: ON	Frequency counter	ANT	VR1	Adjust to the frequency	within ±100Hz
2. DQT/QT Balance	1) CH: TX center	Modulation analyzer		VR301	Rectify the waveform to square wave	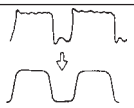
3. Lo Power (PC Mode)	1) CH TX center CH TX low CH TX high	Power meter Current meter		PC key	Adjust it to 2W	within ±0.1W
4. MAX DEV	1) CH: TX center AG: 1kHz/50mV	Modulation analyzer 15kHz LPF AG, AF. V. M		VR302	Adjust it to ± 4.2kHz	±100Hz
5. MIC sensitivity	1) CH: TX center AG: 1kHz/5mV				Check	±2.2kHz~3.8kHz
6. QT Deviation (PC Mode)	1) CH: TX center CH: TX low CH: TX high QT: 151.4Hz	Modulation analyzer 3kHz LPF		PC key	Adjust it to 0.75kHz	±0.05Hz
7. DQT Deviation (PC Mode)	1) CH: TX center CH: TX low CH: TX high DQT:023N	Modulation analyzer 3kHz LPF		PC key	Adjust it to ± 0.65kHz	±0.05Hz
8. DTMF Deviation	1) CH TX center using [9] key	Modulation analyzer 15kH LPF		VR303	Adjust it to 2.5kHz.	±100Hz
9. Battery Warning (PC Mode)	1) Battery terminal: 5.5V			PC key		

调整

在计算机模式下使用KPG-69D编程软件调整下记项目 (参见第10页)

噪音抑制电路电平、S计电平、低功率、QT偏差、DQT偏差、电池警告

发射部和接收部公用部分 (压控振荡器)

项目	条件	测量		调整		规格/备注
		测试设备	终端	部件	方法	
1. 设定	1) 电源电压电池终端: 7.5V					
2. 压控振荡器	1) CH: 发射低端频点	数字电压表	CV	TC1	1.0V	±0.1V
	2) CH: 接收低端频点			TC2	1.0V	±0.1V
	3) CH: 发射高端频点					低于 4.5V
	4) CH: 接收高端频点					

接收部

项目	条件	测量		调整		规格/备注
		测试设备	终端	部件	方法	
1. 带电滤波器	1) CH: 接收中心频点	Tra 发生器 频谱分析仪		TC3,TC5	调整频谱波形	
2. 音频电平	1) CH: 接收中心频点 SSG 输出: -53dBm (501μV) MOD: 1kHz DEV: ±3.0kHz	标准信号发射器 示波器 音频电压表 失真测试仪	天线 扬声器	L22	调整到最大音频电平 音量旋钮位置位于12点	
3. 灵敏度	1) CH: 接收中心频点 CH: low CH: high SSG 输出: -116dBm (0.35μV) MOD: 1kHz DEV: ±3.0kHz				检查	SINAD: 12dB或更高
4. 噪音抑制电路电平 (计算机模式)	1) CH: 接收中心频点			PC机键		
	2) 第 9 级 SSG 输出: -116dBm (0.35μV)				经调整打开静噪	
	3) 第 11 级 SSG 输出: -123dBm (0.16μV)				经调整打开静噪	
5. S 计电平 (计算机模式)	1) CH: 接收中心频点	SSG	天线	PC机键		
	2) Full digit SSG 输出: -110dBm (0.7μV)				调节成全数字	
	3) one Digit SSG 输出: -120dBm (0.2μV)				调节成单数字	

发射部

项目	条件	测量		调整		规格/备注
		测试设备	终端	部件	方法	
1. 发射频率	1) CH: 发射中心频点 PTT: 开启	频率计数器	天线	VR1	调整频率	±100Hz以内
2. DQT/QT 平衡	1) CH: 发射中心频点	频谱分析仪		VR301	将波形整流为方形波	
3. 低功率 (计算机模式)	1) CH 发射中心频点 CH 发射低频点 CH 发射高频点	功率表 电流表		PC机键	调整到 2W	±0.1W以内
4. 最大DEV	1) CH: 发射中心频点 AG: 1kHz/50mV	频谱分析仪 15kHz LPF AG, AF. V. M		VR302	调整到 4.2kHz	±100Hz
5. 调制灵敏度	1) CH: 发射中心频点 AG: 1kHz/5mV				检查	±2.2kHz~3.8kHz
6. QT DEV (计算机模式)	1) CH: 发射中心频点 CH: 发射低频点 CH: 发射高频点 QT: 151.4Hz	频谱分析仪 3kHz LPF		PC机键	调整到±0.75kHz	±0.05Hz
7. DQT DEV (计算机模式)	1) CH: 发射中心频点 CH: 发射低频点 CH: 发射高频点 DQT:023N	频谱分析仪 3kHz LPF		PC机键	调整到±0.65kHz	±0.05Hz
8. DTMF DEV	1) CH TX 中心，使用 [9] 键	频谱分析仪15kH LPF		VR303	调整到 2.5kHz.m	±100Hz
9. 电池警告 (计算机模式)	1) 电池终端: 5.5V			PC机键		

ManualsPlus.com

ADJUSTMENT / 调整

ADJUSTMENT FREQUENCY LIST

Destination	C	
CH	TX f (MHz)	RX f (MHz)
Center	460.00	460.050
Low	450.00	450.050
Hi	470.00	469.950

调整频率请单

型式	C	
信道	发射频率 (MHz)	接收频率 (MHz)
中心	460.00	460.050
低	450.00	450.050
高	470.00	469.950

BPF-Wave

• **TK-3118 (C type)**

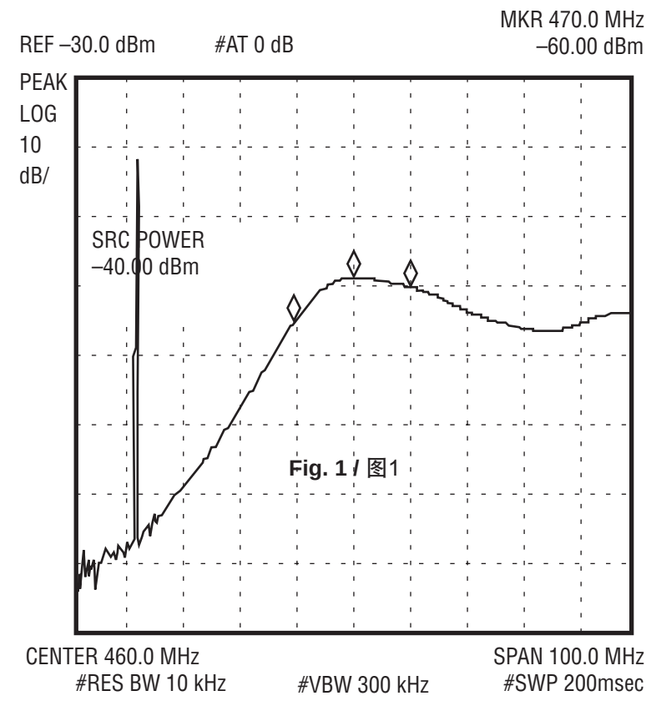

Fig. 1 / 图1

Notes:

- Adjust the TX VCO trimmer within a short period of time (Appros. 10 seconds). When the transceiver is in TX mode and the final amplifier transistor is detached from the chassis for a long time, it may cause thermal damage to the transistor (No heatsink).

注释:

- 在短时间内调整发射压控微调电容器（大约10秒）。当收发机处于发射模式，并且末级放大器晶体管长时间从机架拔出时，则可能会对晶体管产生热损伤（无散热器）。

ManualsPlus.com

TK-3118 PC BOARD VIEW / PC 板视图

DISPLAY UNIT (X41-3583-00) Component side view

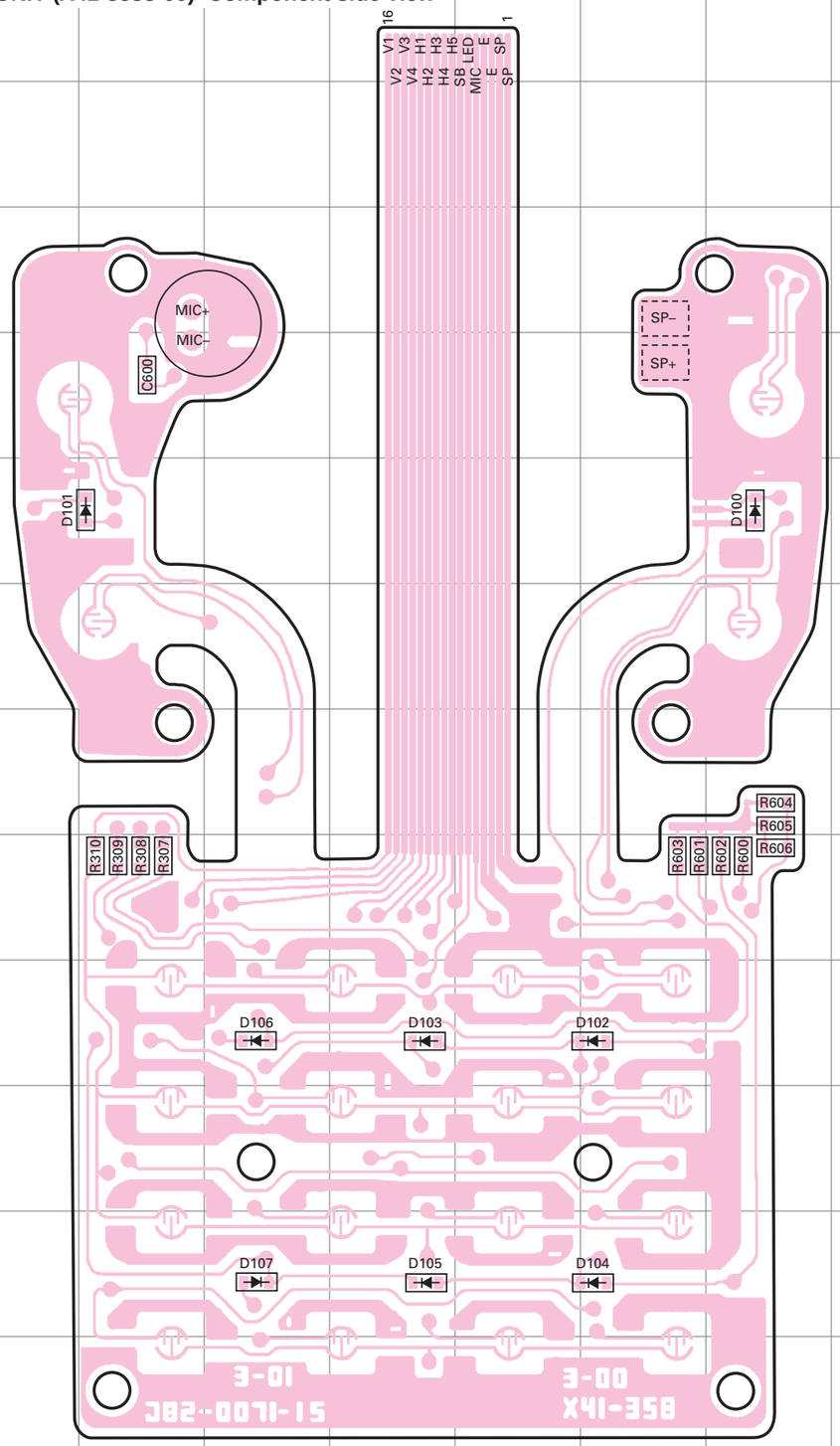

DISPLAY UNIT (X41-3583-00)
Component side view

Ref. No.	Address
D100	6H
D101	6C
D102	10G
D103	10E
D104	12G
D105	12E
D106	10D
D107	12D

Component side

Foil side

DISPLAY UNIT (X41-3583-00) Foil side view

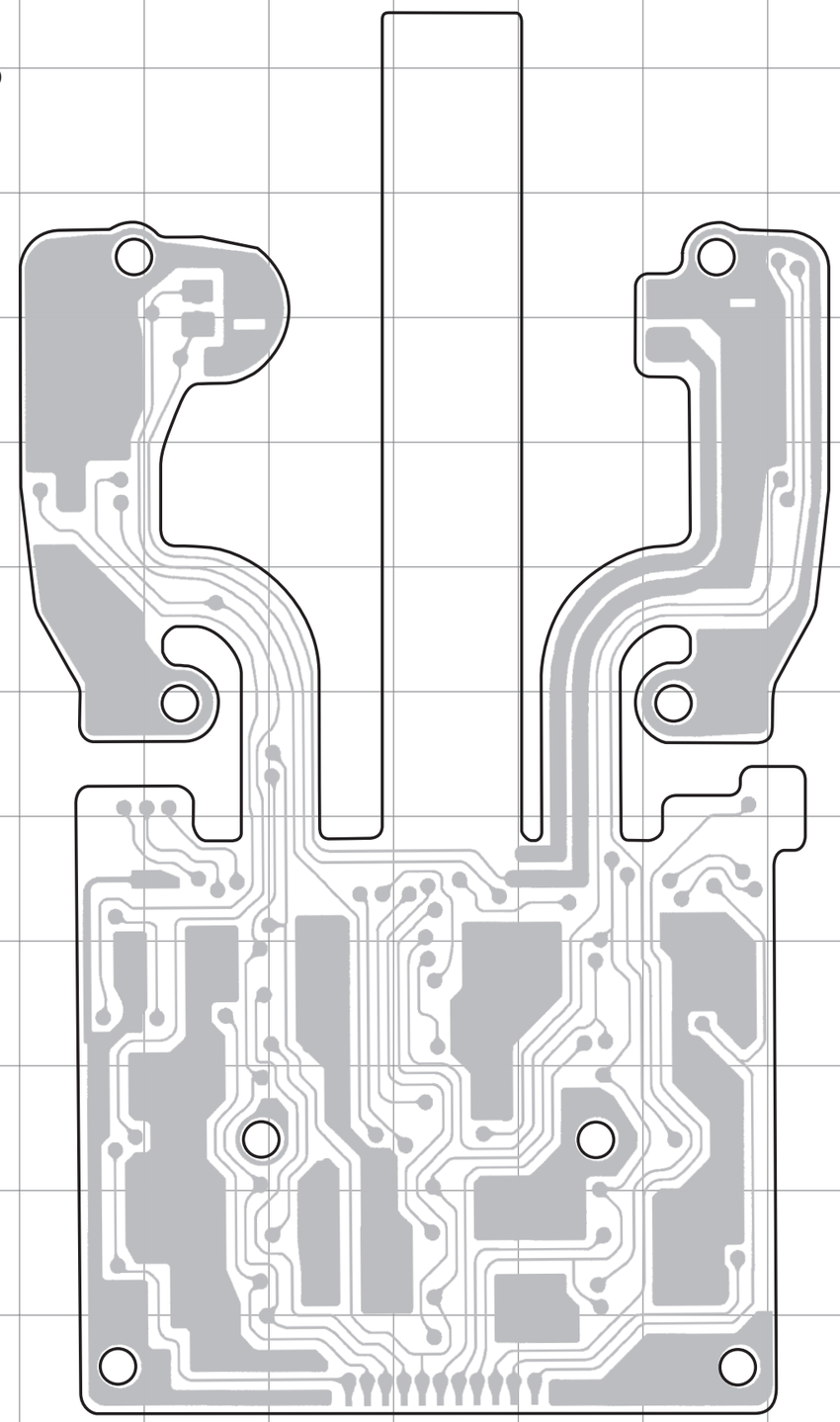

ManualsPlus.com

PC BOARD VIEW / PC 板视图 TK-3118

TX-RX UNIT (X57-6243-00) Component side view

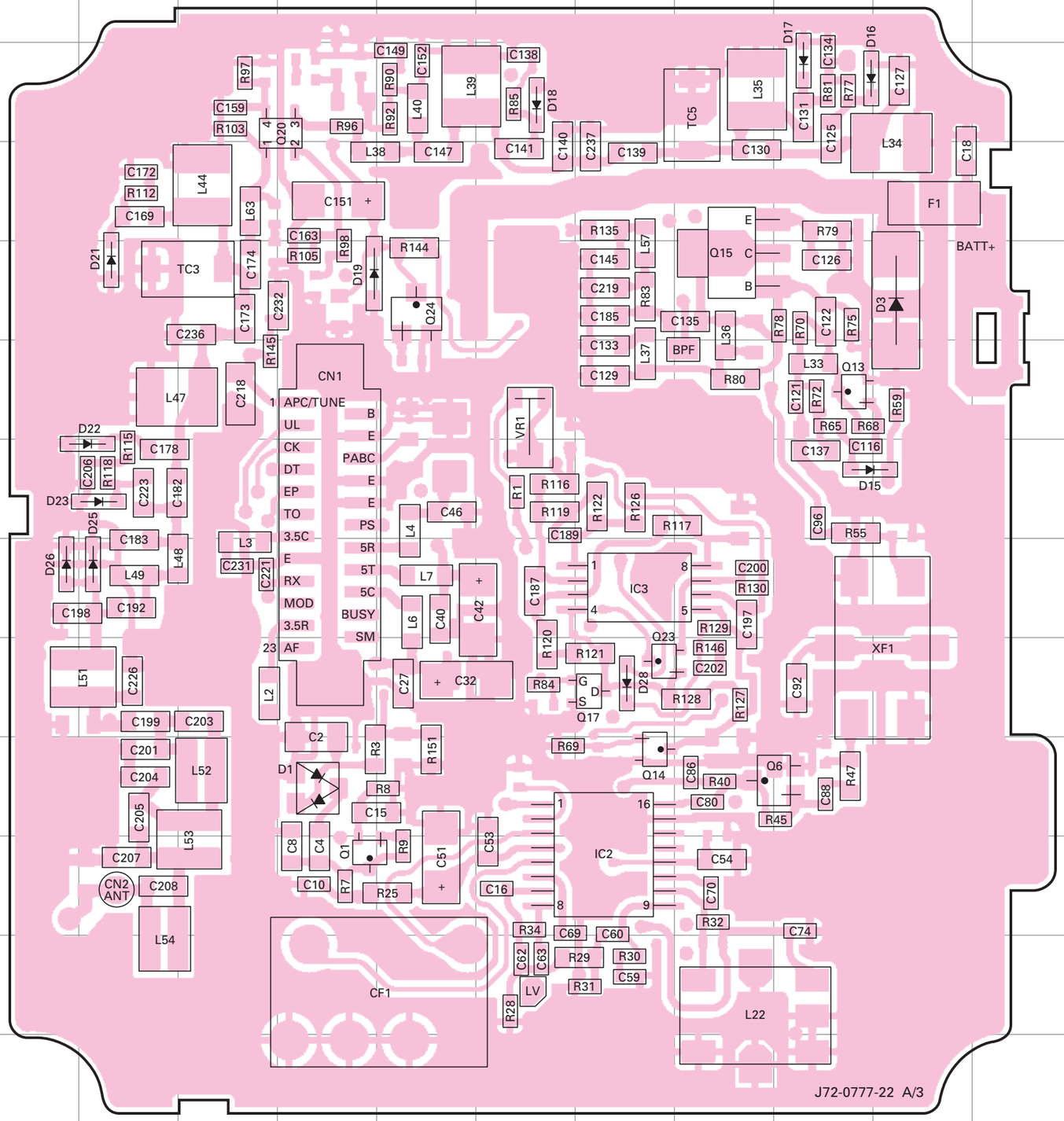

TX-RX UNIT (X57-6243-00) (A/3)
Component side view

Ref. No.	Address
IC2	11H
IC3	8H
Q1	10E
Q6	10J
Q13	6J
Q14	10H
Q15	5I
Q17	9H
Q20	3E
Q21	5G
Q23	9H
Q24	5F
D1	10E
D3	5K
D15	7J
D16	3K
D17	3J
D18	3G
D19	5E
D21	5C
D22	7C
D23	7C
D25	8C
D26	8B
D28	9H

DTA144EE
DTC114TE
KTC4082
2SC4738
2SC5108

DTC144EUA

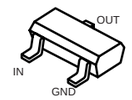

TA31136FN

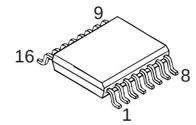

2SC4988

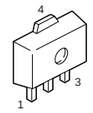

NJM2904V

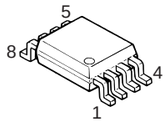

MA742

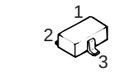

3SK274

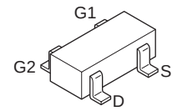

Component side

Pattern 1
Pattern 2
Pattern 3
Pattern 4

Foil side

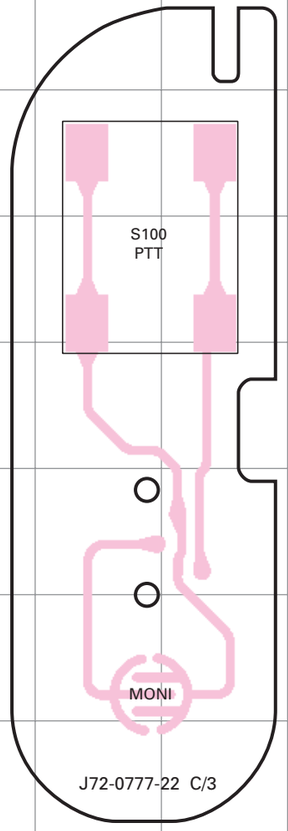

ManualsPlus.com

TK-3118 PC BOARD VIEW / PC 板视图

TX-RX UNIT (X57-6243-00) Foil side view

KTC4082
2SC4617
2SC5066
2SC5108

3SK320

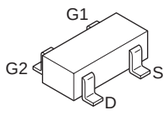

2SJ243

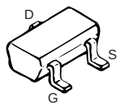

KRX102U

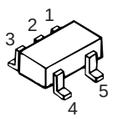

MB15E03SL

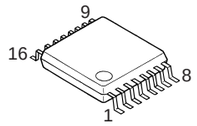

2SK3476

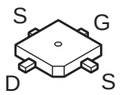

2SK3475

TX-RX UNIT (X57-6243-00) (A/3)
Foil side view

Ref. No.	Address
IC1	8O
Q2	10N
Q3	7L
Q4	11J
Q5	10J
Q7	9I
Q8	8J
Q9	8K
Q10	7J
Q11	8I
Q12	5K
Q18	3M
Q22	4Q
D2	7N
D6	10K
D7	13K
D9	10L
D11	12K
D12	8J
D13	7J
D14	6J
D24	9Q
D27	9Q

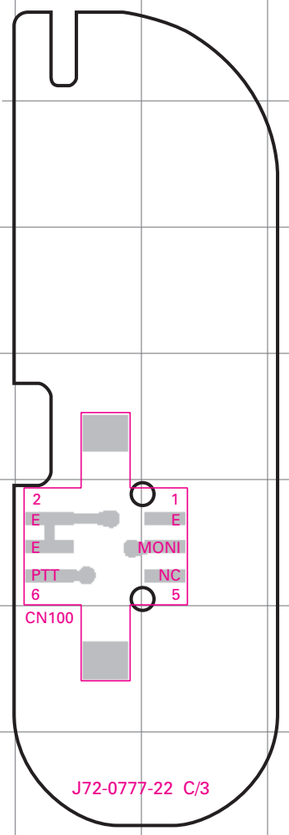

Component side
Pattern 1
Pattern 2
Pattern 3
Pattern 4
Foil side

ManualsPlus.com

PC BOARD VIEW / PC 板视图 TK-3118

TX-RX UNIT (X57-6243-00) Component side view + Foil side view

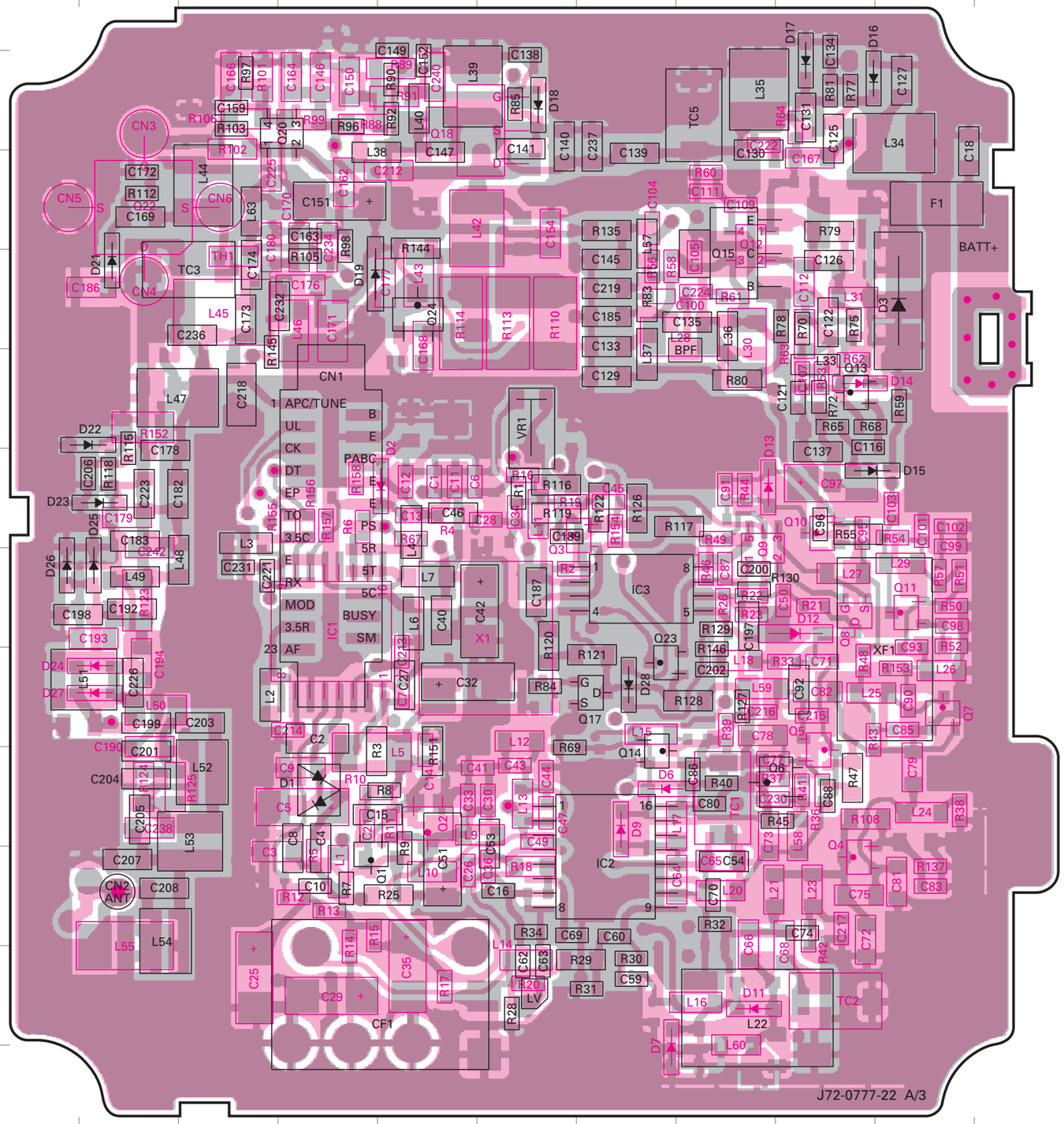

TX-RX UNIT (X57-6243-00) (A/3)
Component side view + Foil side view

Ref. No.	Address
IC1	8E
IC2	11H
IC3	8H
Q1	10E
Q2	10F
Q3	7H
Q4	11J
Q5	10J
Q6	10J
Q7	9K
Q8	8J
Q9	8I
Q10	7J
Q11	8K
Q12	5I
Q13	6J
Q14	10H
Q15	5I
Q17	9H
Q18	3G
Q20	3E
Q21	5G
Q22	4C
Q23	9H
Q24	5F
D1	10E
D2	7F
D3	5K
D6	12H
D7	13H
D9	11I
D11	12I
D12	10H
D13	7I
D14	6J
D15	7J
D16	3K
D17	3J
D18	3G
D19	5E
D21	5C
D22	7C
D23	7C
D24	9C
D25	8C
D26	8B
D27	9C
D28	9H

DTA144EE
DTC114TE
KTC4082
2SC4617
2SC4738
2SC5066
2SC5108

2SC4988

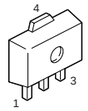

DTC144EUA

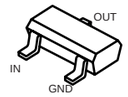

MA742

3SK298
3SK320

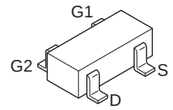

2SJ243

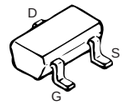

KRX102U

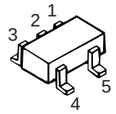

MB15E03SL

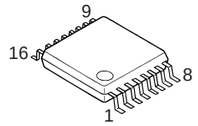

NJM2904V

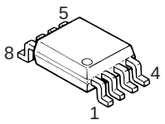

TA31136FN

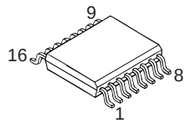

2SK3476

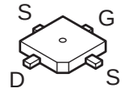

2SK3475

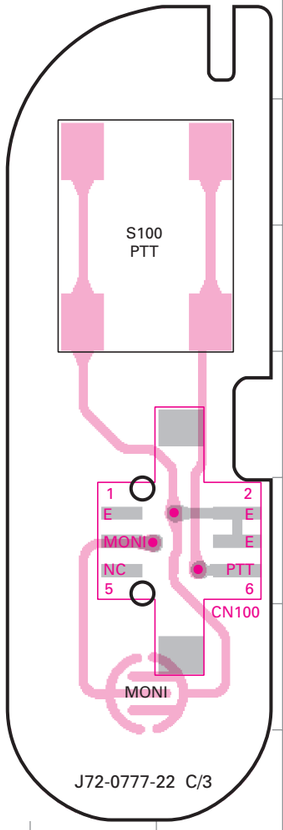

● Connect 1 and 4.

Component side

Pattern 1
Pattern 2
Pattern 3
Pattern 4

Foil side

ManualsPlus.com

TK-3118 PC BOARD VIEW / PC 板视图

TX-RX UNIT (X57-6243-00) (B/3)
Component side view

Ref. No.	Address
IC300	7I
IC302	10G
IC303	5E
IC304	6E
IC306	3G
Q303	7G
Q315	12E
Q316	5F
Q317	10H
Q318	10F
Q320	10J
Q324	11I
D304	3M
D305	13M
D309	12H

TX-RX UNIT (X57-6243-00) Component side view

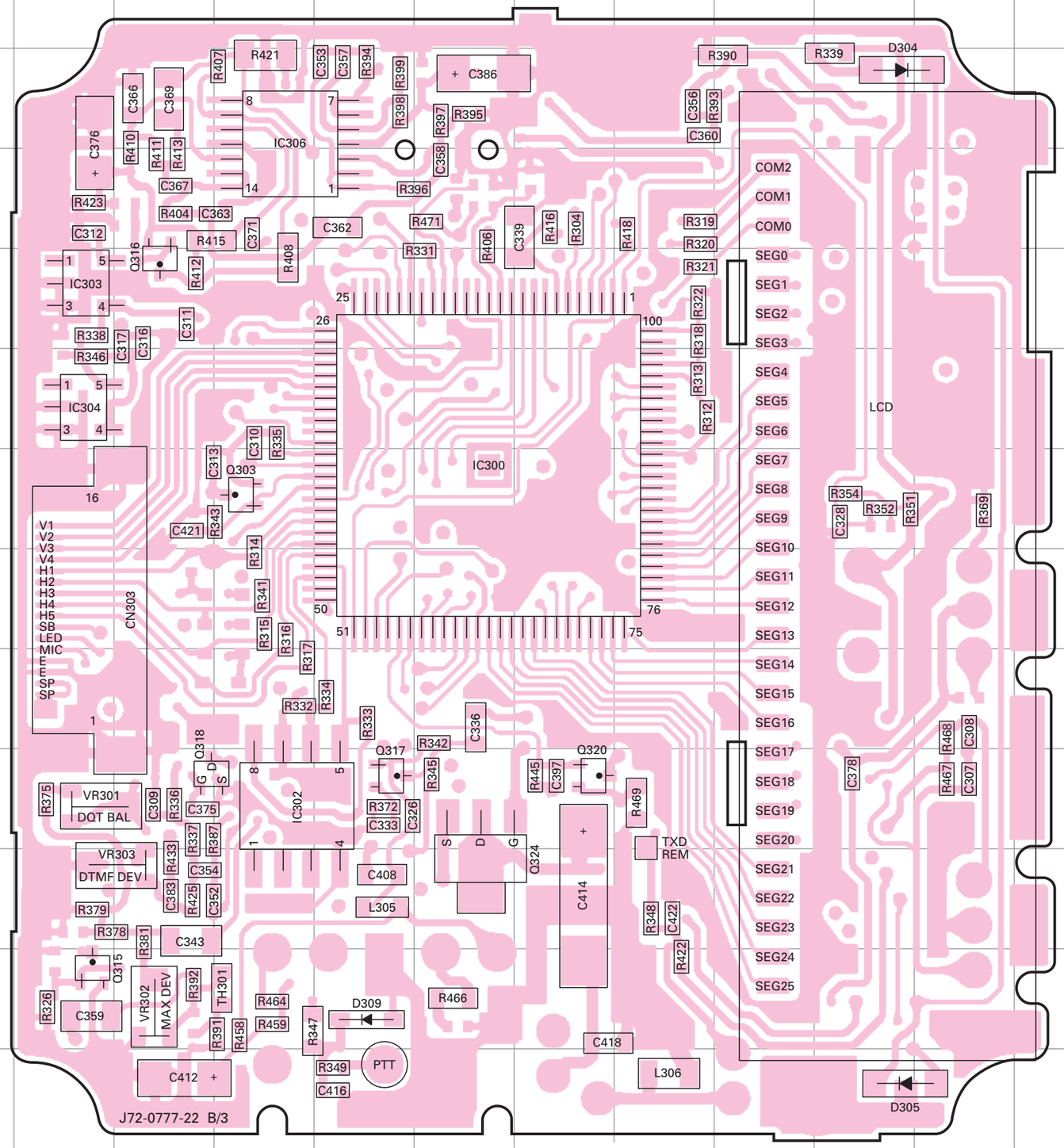

Component side
Pattern 1
Pattern 2
Pattern 3
Pattern 4
Foil side

DTA144EE
DTC114EE
DTC114YE
DTC144EE
2SC4738

2SK1588

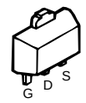

2SK1824

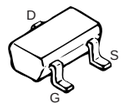

PST9124NR
PST9145NR

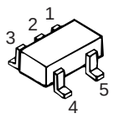

AT24C16N-10SI

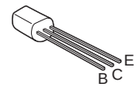

NJM2902V

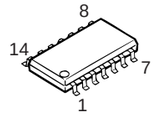

24LC16BT-I/SN

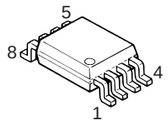

M38267M8L271GP

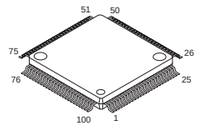

ManualsPlus.com

PC BOARD VIEW / PC 板视图 TK-3118

DTA123JE
DTA144EE
DTC114EE
DTC144EE
2SC4617

UMG3N

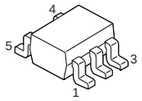

2SC4919
KTA1298

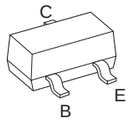

FP210

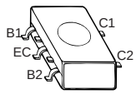

DA221

MA742

UPA672T

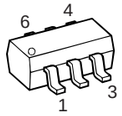

2SK1824

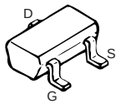

KIA6278F

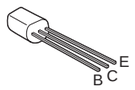

XC62FP3502P

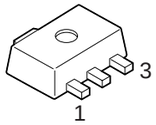

NJM2904V

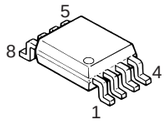

LC73881M

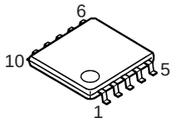

NJM2902V

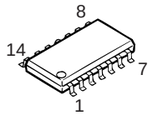

TX-RX UNIT (X57-6243-00) Foil side view

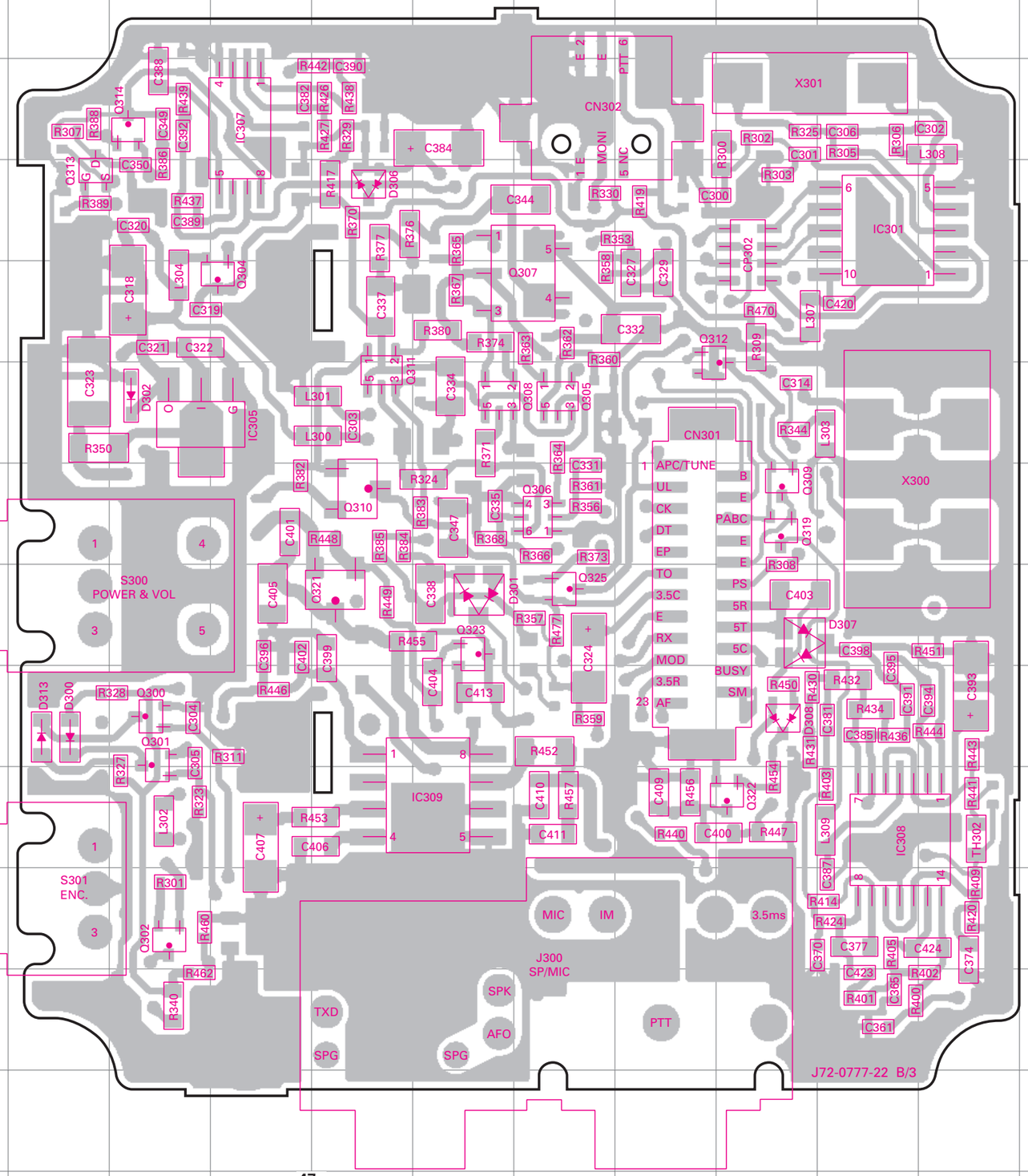

TX-RX UNIT (X57-6243-00) (B/3)
Foil side view

Ref. No.	Address
IC301	4O
IC305	6H
IC307	3I
IC308	10O
IC309	10K
Q300	9H
Q301	9H
Q302	11H
Q304	5I
Q305	6L
Q306	7L
Q307	5L
Q308	6K
Q309	7N
Q310	7J
Q311	6J
Q312	5M
Q313	4G
Q314	3H
Q319	7N
Q321	8J
Q322	10N
Q323	8K
Q325	8L
D300	9G
D301	8K
D302	6H
D306	4J
D307	8N
D308	9N
D313	9G

Component side
Pattern 1
Pattern 2
Pattern 3
Pattern 4
Foil side

ManualsPlus.com

TK-3118 PC BOARD VIEW / PC 板视图

TX-RX UNIT (X57-6243-00) Component side view + Foil side view

TX-RX UNIT (X57-6243-00) (B/3)
Component side view + Foil side view

Ref. No.	Address
IC300	6H
IC301	4E
IC302	10F
IC303	5D
IC304	6D
IC305	6L
IC306	3F
IC307	3K
IC308	10E
IC309	10I
Q300	9L
Q301	9L
Q302	11L
Q303	7F
Q304	5K
Q305	6H
Q306	7H
Q307	5H
Q308	6I
Q309	7F
Q310	7J
Q311	6J
Q312	5G
Q313	4M
Q314	3L
Q315	11D
Q316	4E
Q317	9G
Q318	9E
Q319	7F
Q320	9I
Q321	8J
Q322	10F
Q323	8I
Q324	10H
Q325	8H
D300	9M
D301	8I
D302	6L
D304	3L
D305	12L
D306	4J
D307	8F
D308	9F
D309	12G
D313	9M

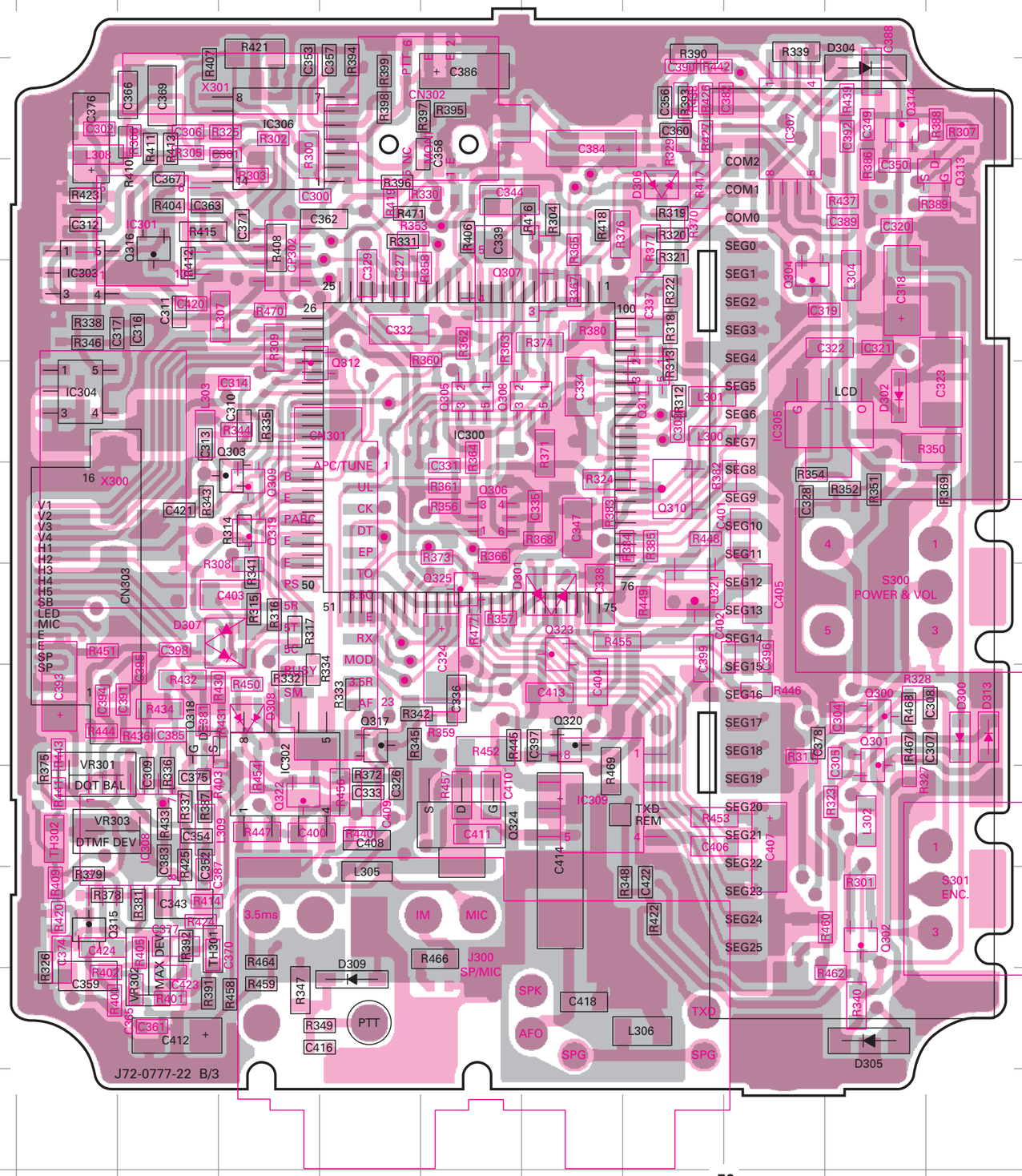

● Connect 1 and 4.

Component side

Pattern 1
Pattern 2
Pattern 3
Pattern 4

Foil side

DTA123JE
DTA144EE
DTC114EE
DTC114YE
DTC144EE
2SC4617
2SC4738

UMG3N

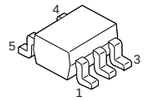

2SC4919
KTA1298

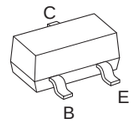

FP210

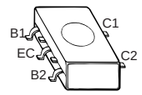

DA221

MA742

2SK1588

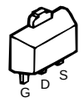

UPA672T

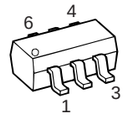

2SK1824

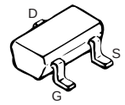

PST9124NR
PST9145NR

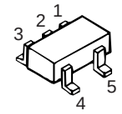

AT24C16N-10SI
KIA6278F

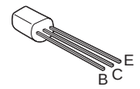

XC62FP3502P

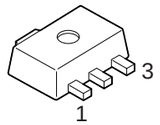

NJM2904V
24LC16BT-I/SN

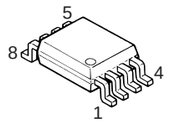

LC73881M

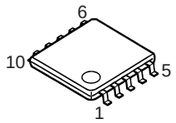

NJM2902V

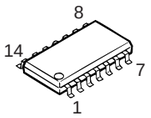

M38267M8L271GP

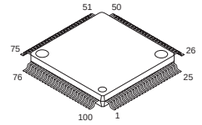

ManualsPlus.com

SCHEMATIC DIAGRAM / 原理图 TK-3118

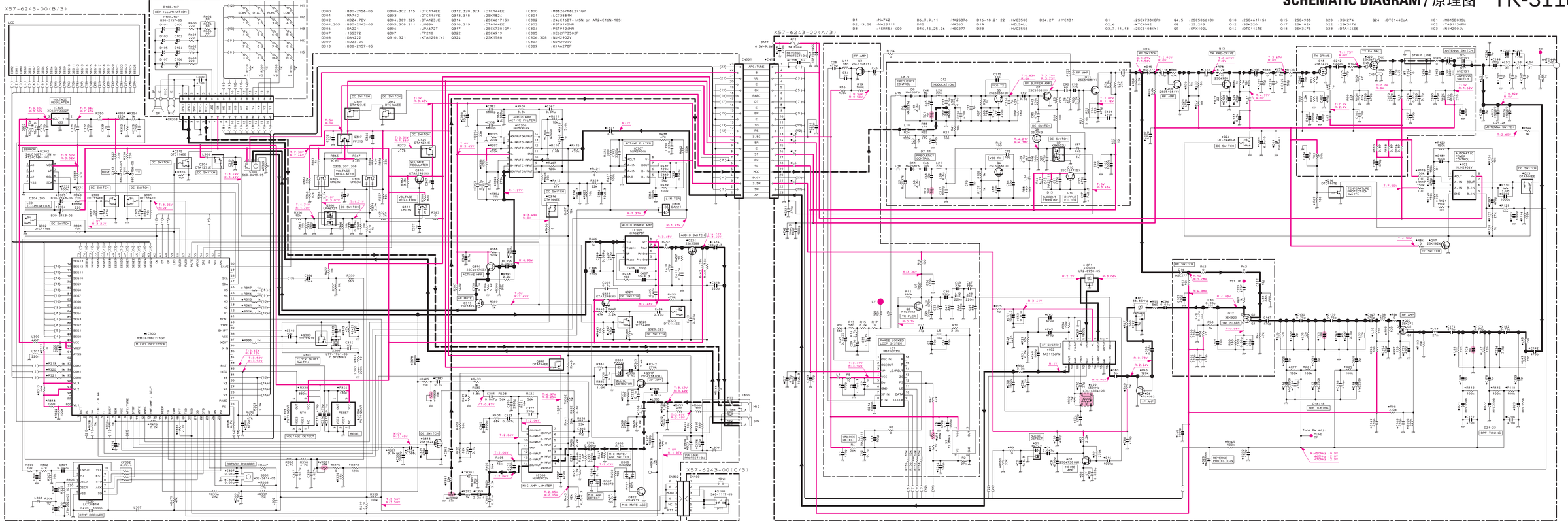

Note : Component marked with a dot (●) are parts of pattern1.

TK-3118 TK-3118

BLOCK DIAGRAM / 方块图

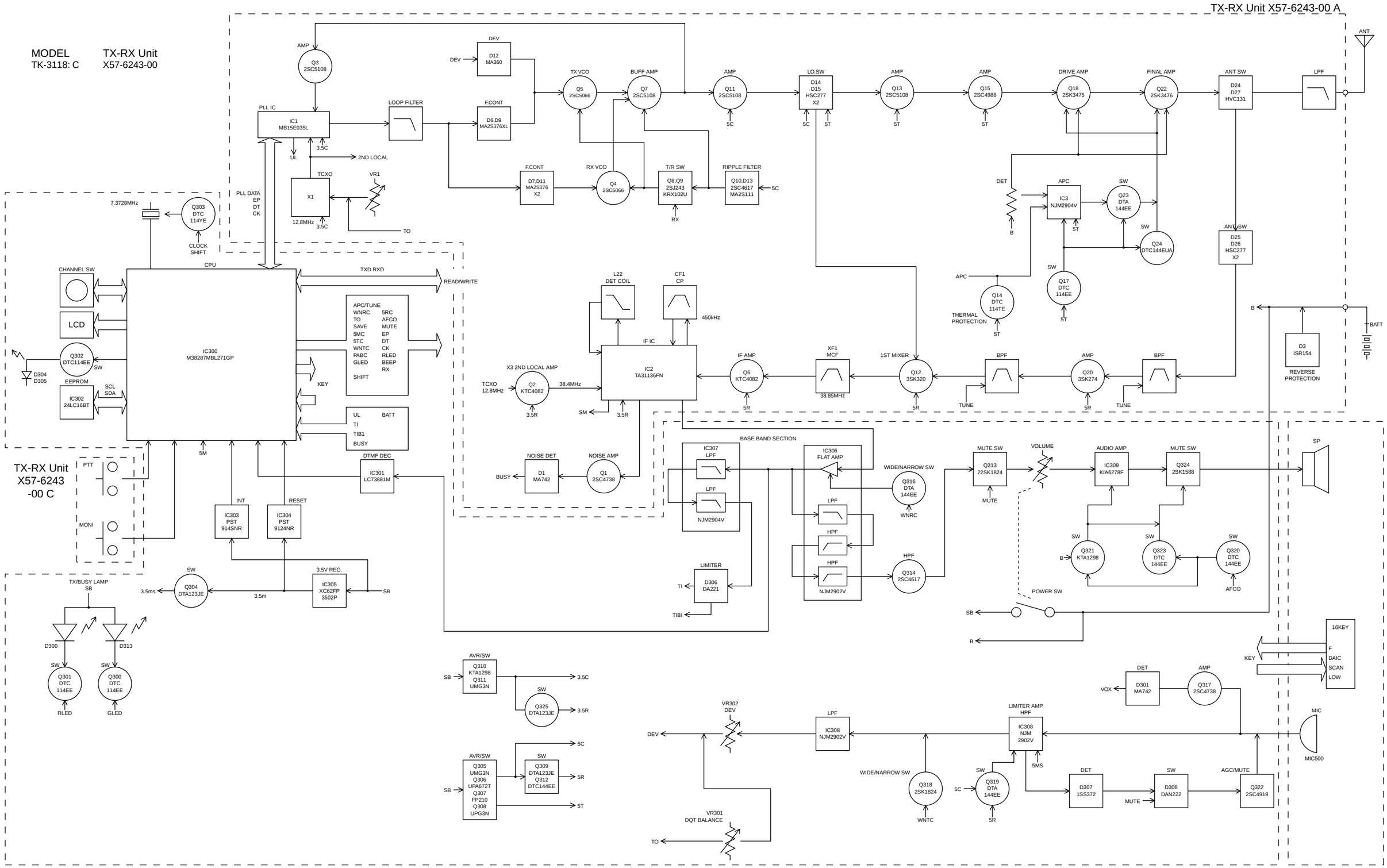

TK-3118
ManualsPlus.com

LEVEL DIAGRAM / 电平图

RX section

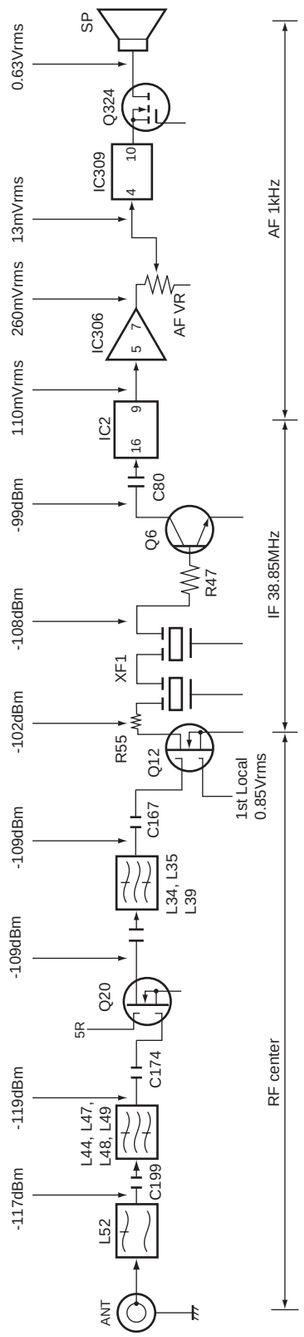

SG output level for obtaining 12dB / SINAD when injected to each point through a 470pF coupling capacitor.
Measure the 1st Local level on a RF VTVM.

Modulate the AF level with a frequency of 1kHz and deviation of 1.5kHz (Narrow), 3kHz (Wide). Then take the signal from the signal generator output when set to -53dBm and obtain the level shown on an AF VTVM when the AF output has been adjusted to 0.63Vrms with the AF vol.

TX section

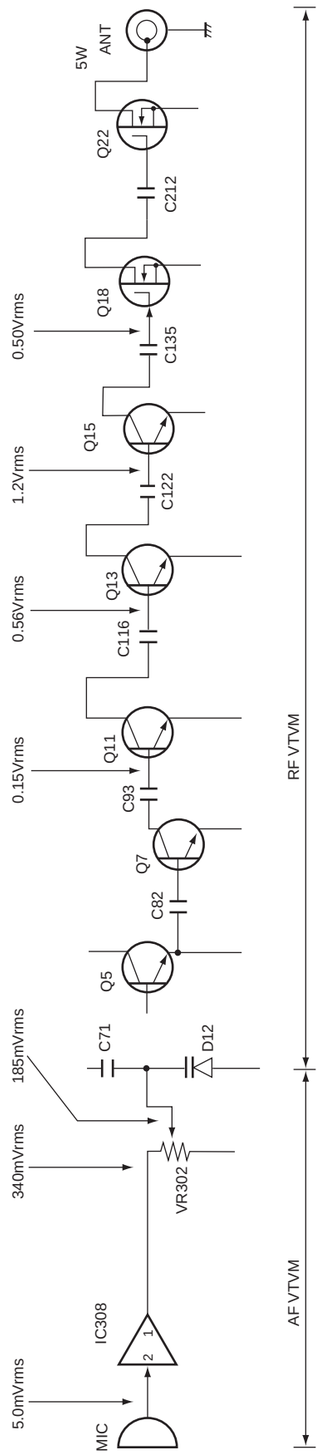

Measure the audio frequency on an AF VTVM and radio frequency on a RF VTVM at high impedance.
Set the MIC input to obtain a modulation factor of 60% with the transmit frequency at center and a modulation frequency of 1kHz.

BC-20 / PB-40 / PB-41 / BT-12

BC-20 RAPID CHARGER

PB-40 (Ni-MH) STANDARD BATTERY PACK

SPECIFICATIONS

Voltage	: 7.2V
Battery Capacity	: 600mAh
Charging time	: approximately 60 minutes

PB-41 (Ni-MH) LONG LIFE BATTERY PACK

SPECIFICATIONS

Voltage	: 7.2V
Battery Capacity	: 1000mAh
Charging time	: approximately 100 minutes

BT-12 BATTERY CASE

AA Battery X 5

ManualsPlus.com

SPECIFICATIONS

General

Frequency Range	C : 450~470MHz
Number of channels	Max. 50
Channel Spacing	25kHz (Wide) 12.5kHz (Narrow)
PLL Channel Stepping	5kHz, 6.25kHz
Operating Voltage	7.5 VDC ±20%
Battery Life	More than 5 hours at 5 watts (5-5-90 duty cycle with PB-40 battery) More than 8 hours at 5 watts (5-5-90 duty cycle with PB-41 battery)
Operating Temperature renge	-20˚C to +60˚C
Dimensions and Weight	
With PB-40 (7.2V 600mAh battery)	56W x 116H x 24.3D mm 259g
With PB-41 (7.2V 1100mAh battery)	56W x 129.2H x 24.3D mm 301g

Receiver (Measurements made per EIA standard EIA-RS316B)

Sensitivity	
EIA 12dB SINAD	0.25μV (Wide)/0.28μV (Narrow)
Selectivity	60dB (Wide)/50dB (Narrow)
Intermodulation	60dB (Wide)/55dB (Narrow)
Spurious responce	60dB
Audio Power Output	500mW
Frequency Stability	±2.5ppm
Channel Frequency Spread	20MHz

Transmitter (Measurements made per EIA standard EIA-RS 316B)

RF Power output	5W/2W
Spurious and Harmonics	60dB
Modulation	16KϕF3E (Wide)/8K50F3E (Narrow)
FM Noise	45dB (Wide)/40dB (Narrow)
Audio Distortion	Less than 5%
Frequency Stability	±2.5ppm
Channel Frequency Spread	20MHz

ManualsPlus.com

规格

概述

频率范围 ..... C : 450～470MHz
信道数量 ..... 最多 50 个
信道间距 ..... 25kHz（宽） 12.5kHz（窄）
锁相环电路步进频率 ..... 5kHz，6.25kHz
工作电压 ..... 7.5V 直流 ± 20%
电池寿命 ..... 5W 时长于 5 个小时（使用 PB-40 电池 5-5-90 工作周期）
5W 时长于 8 个小时（使用 PB-41 电池 5-5-90 工作周期）
工作温度范围 ..... -20℃到 +60℃
尺寸和重量
带有 PB-40（7.2V 600mAh 电池）..... 56 宽 × 116 高 × 24.3 长毫米
259g
带有 PB-41（7.2V 1100mAh 电池）..... 56 宽 × 129.2 高 × 24.3 长毫米
301g

接收部（以每 EIA 标准 EIA-RS316BA 进行测量）

灵敏度
EIA 12dB SINAD ..... 0.25μV（宽）/ 0.28μV（窄）
选择性 ..... 60dB（宽）/ 50dB（窄）
互调 ..... 60dB（宽）/ 55dB（窄）
假信号响应 60dB
音频功率输出 500mW
频率稳定性 ..... ± 2.5ppm
信道频率扩展 20MHz

发射部（以每 EIA 标准 EIA-316BA 进行测量）

射频功率输出 5W/2W
寄生和谐波 60dB
调制 ..... 16KφF3E（宽）/ 8K50F3E（窄）
频率调制噪音 ..... 45dB（宽）/ 40dB（窄）
音频失真 ..... 低于 5 %
频率稳定性 ..... ± 2.5ppm
信道频率扩展 20MHz

KENWOOD CORPORATION
14-6, Dogenzaka 1-chome, Shibuya-ku, Tokyo 150-8501, Japan

KENWOOD SERVICE CORPORATION
P.O. BOX 22745, 2201 East Dominguez Street, Long Beach, CA 90801-5745, U.S.A.

KENWOOD ELECTRONICS CANADA INC.
6070 Kestrel Road, Mississauga, Ontario, Canada L5T 1S8

KENWOOD ELECTRONICS DEUTSCHLAND GMBH
Rembrücker Str. 15, 63150 Heusenstamm, Germany

KENWOOD ELECTRONICS BELGIUM N.V.
Mechelsesteenweg 418 B-1930 Zaventem, Belgium

KENWOOD ELECTRONICS FRANCE S.A.
13, Boulevard Ney, 75018 Paris, France

KENWOOD ELECTRONICS U.K. LIMITED
KENWOOD House, Dwight Road, Watford, Herts., WD1 8EB United Kingdom

KENWOOD ELECTRONICS EUROPE B.V.
Amsterdamseweg 37, 1422 AC Uithoorn, The Netherlands

KENWOOD ELECTRONICS ITALIA S.p.A.
Via G. Sirtori, 7/9 20129 Milano, Italy

KENWOOD IBERICA S.A.
Bolivia, 239-08020 Barcelona, Spain

KENWOOD ELECTRONICS AUSTRALIA PTY. LTD.
(A.C.N. 001 499 074)
16 Giffnock Avenue, Centrecourt Estate, North Ryde, N.S.W. 2113, Australia

KENWOOD ELECTRONICS (HONG KONG) LTD.
Unit 3712-3724, Level 37, Tower one Metroplaza, 223 Hing Fong Road, Kwai Fong, N.T., Hong Kong

KENWOOD ELECTRONICS TECHNOLOGIES(S) PTE LTD.
Sales Marketing Division
1 Ang Mo Kio Street 63, Singapore 569110

100%