BLOCK DIAGRAM

ManualsPlus.com

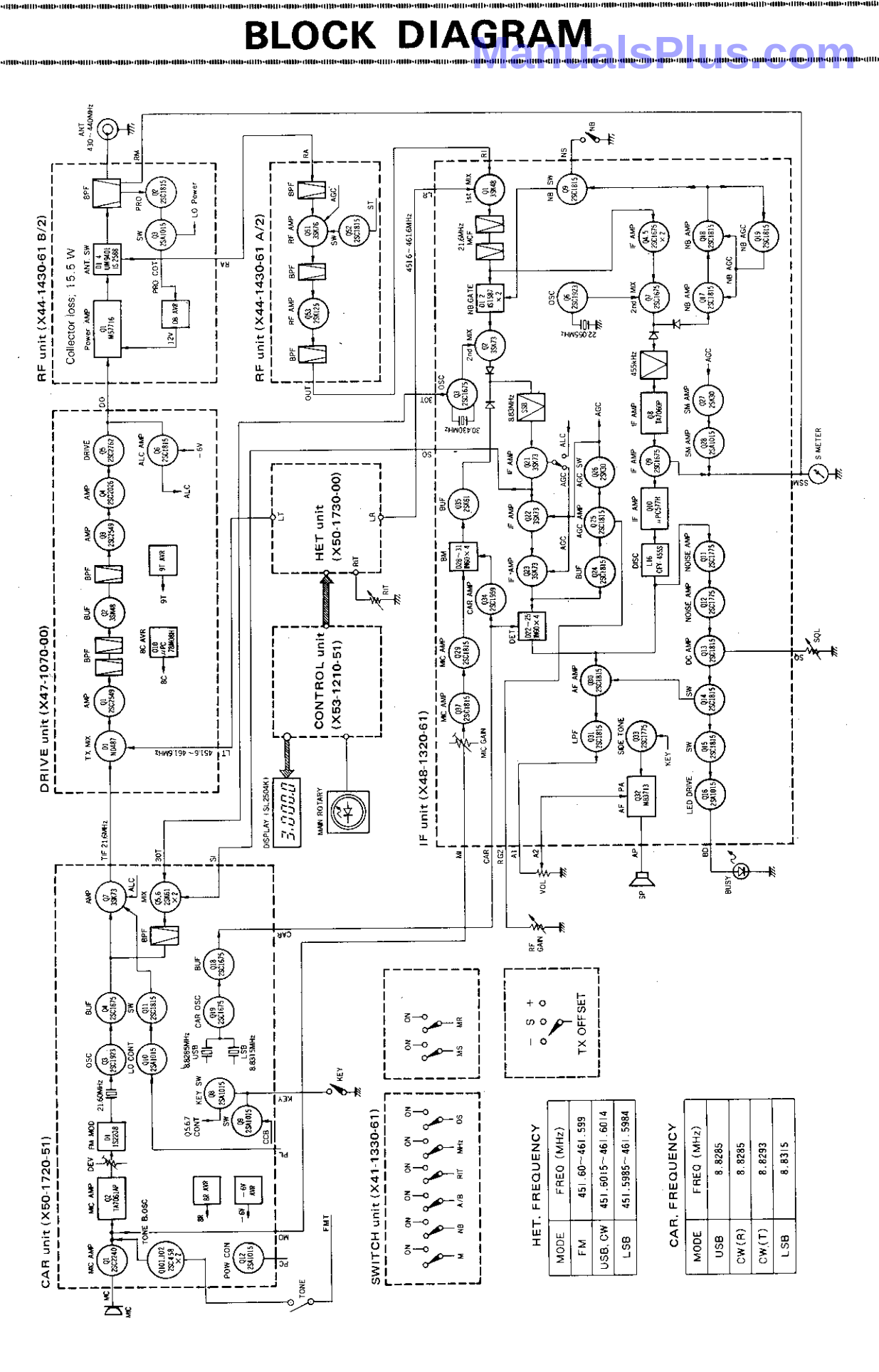

BLOCK DIAGRAM

ManualsPlus.com

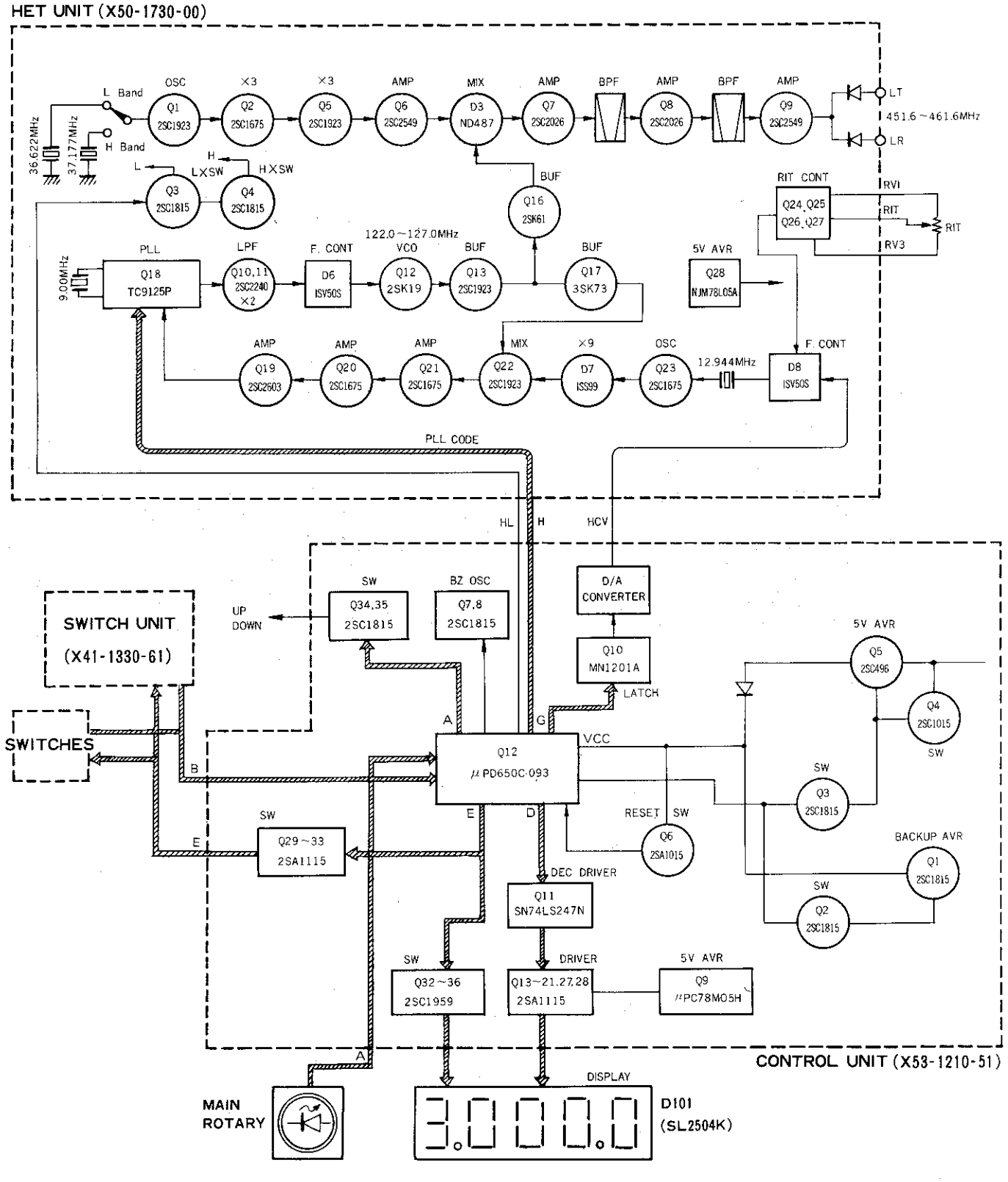

SCHEMATIC DIAGRAM

ManualsPlus.com

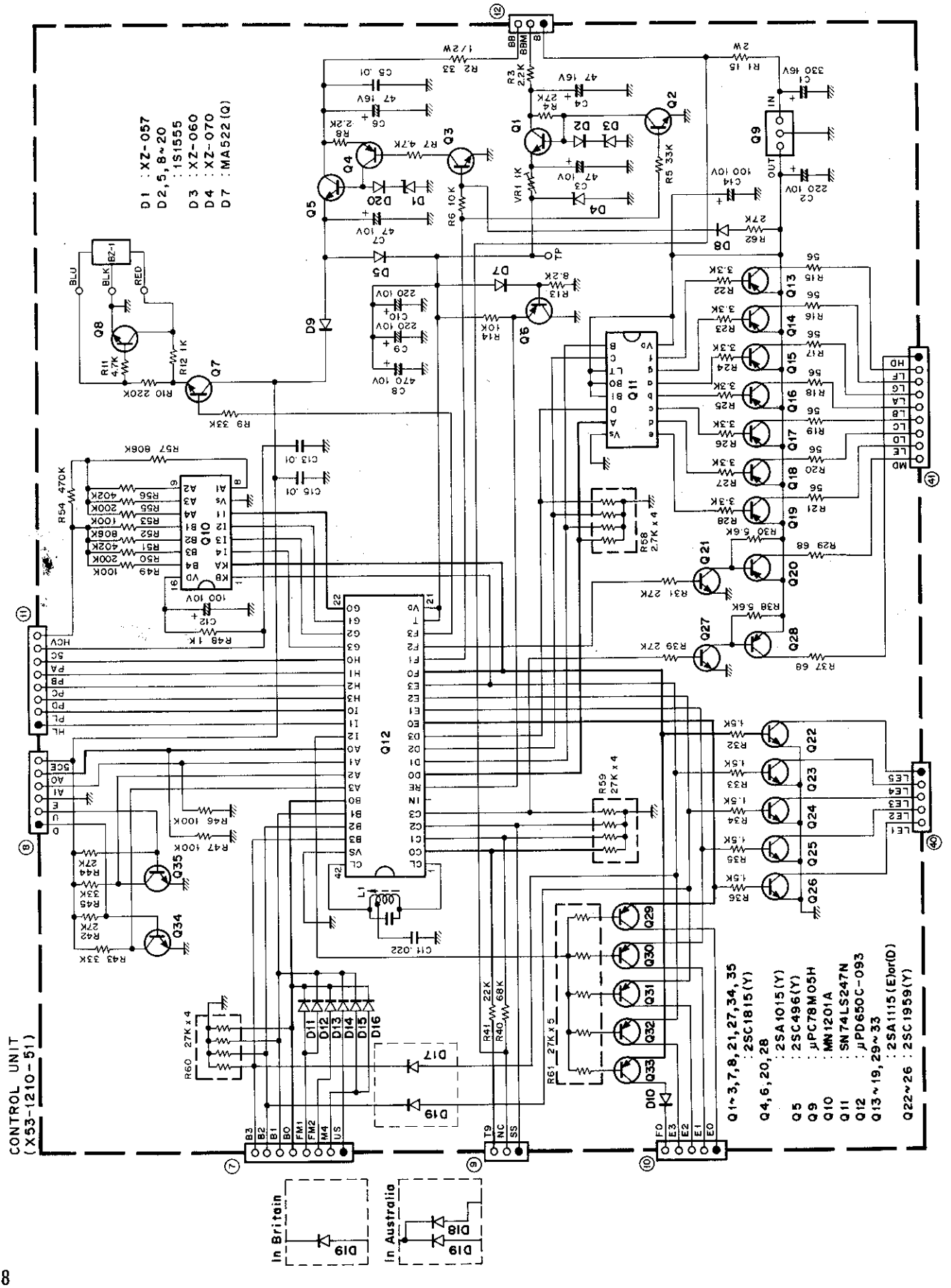

TR-9500 SCHEMATIC

ManualsPlus.com

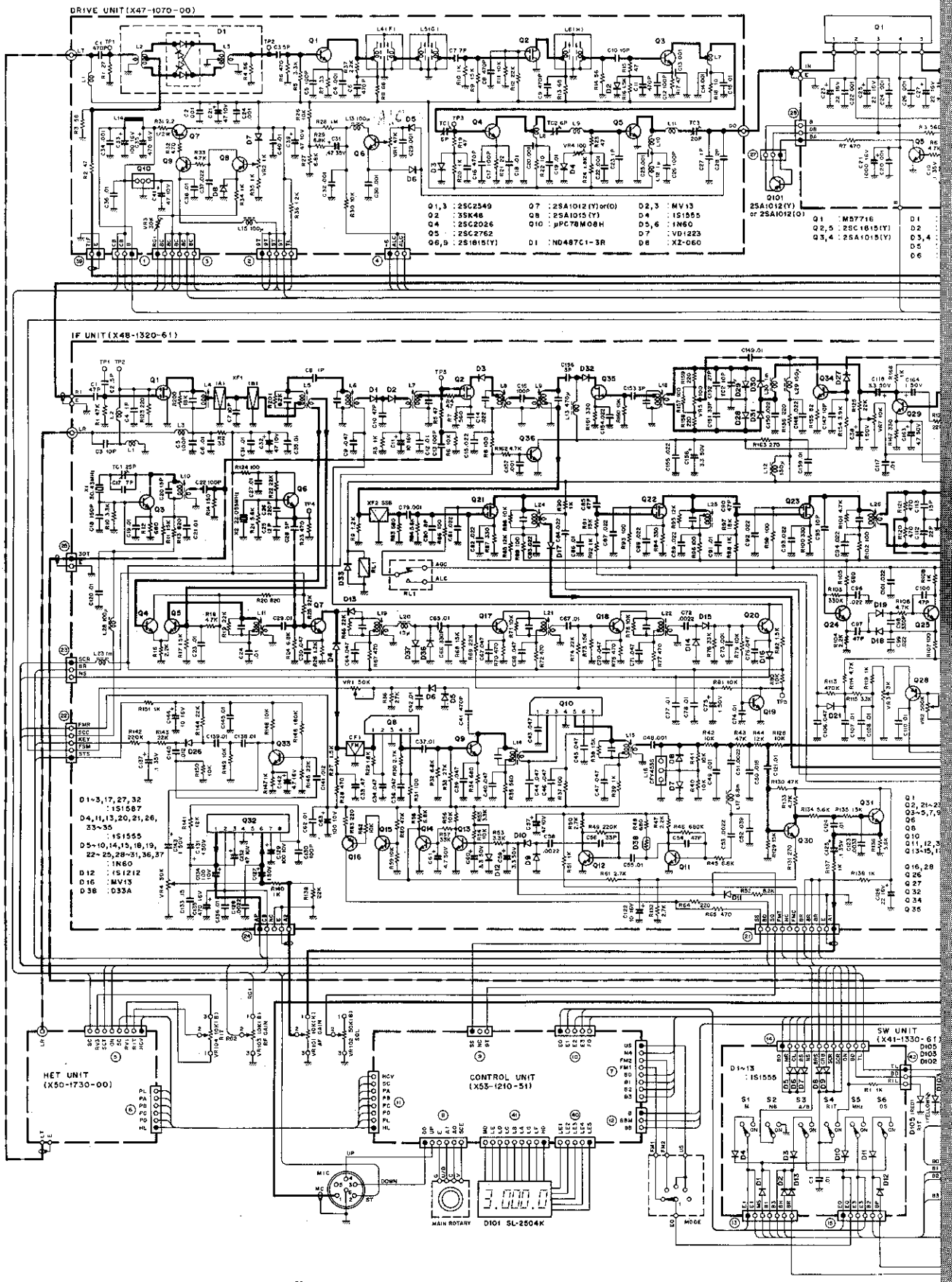

DIAGRAM

ManualsPlus.com

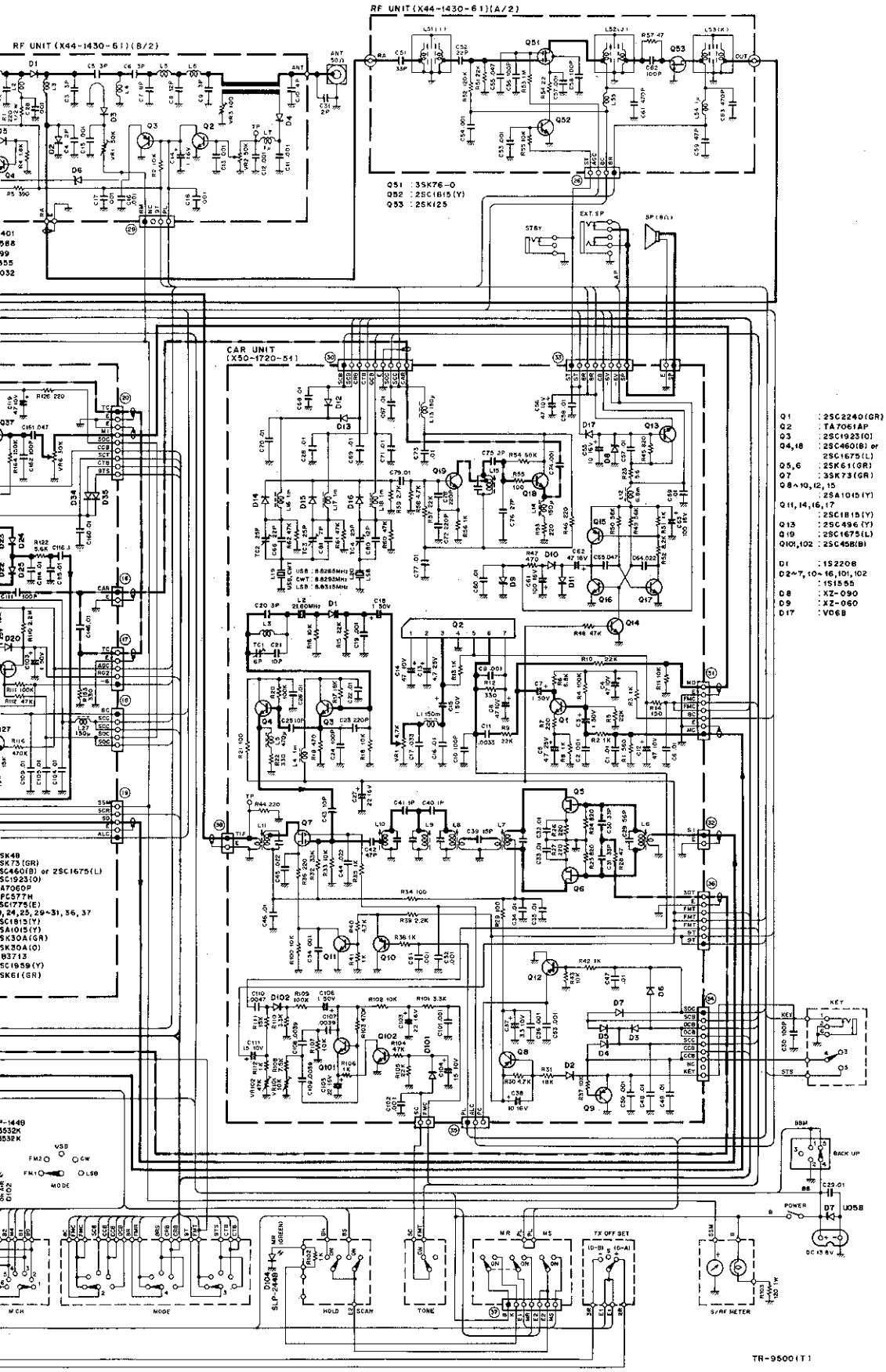

SPECIFICATIONS

ManualsPlus.com

[General]

Semiconductors	ICs	12
	FETs	17
	Transistors	111
	Diodes	115
Frequency range	430.000.0 to 439.999.9 MHz	
Frequency synthesizer	Digital control, phase locked VCO	
Mode	SSB (A3J), FM (F3), CW (A1)	
Antenna impedance	50 ohms	
RPT. Tone burst frequency	1,750 Hz	
Power requirement	13.8 V DC ±15%	
Grounding	Negative	
Operating temperature	−20°C to +50°C	
Current drain	0.7A in receive mode with no input signal	
	3.8A in transmit mode (Approx.)	
	2.0 mA for memory back up	
Dimensions	170 mm (6-11/16″) wide	
	68 mm (2-11/16″) high	
	241 mm (9-1/2″) deep	
Weight	2.7 kg (5.94 lbs)	

[Transmitter Section]

RF output power (at 13.8 V DC, 50 Ω load)	10 W	
Modulation	FM	Variable reactance direct shift
	SSB	Balanced modulation
Frequency tolerance	Less than $\pm 10 \times 10^{-6}$	
Spurious radiation	Less than −60 dB	
Carrier suppression	Better than 40 dB	
Unwanted side band suppression	Better than 40 dB	
Maximum frequency deviation (FM)	±5 kHz	
Microphone	Dynamic microphone with PTT switch, 500 Ω	

[Receiver Section]

Circuitry	Double conversion superheterodyne	
Intermediate frequency	1st IF	21.6 MHz
	2nd IF	(FM) 455 kHz, (SSB/CW) 8.83 MHz
Receiver sensitivity	FM	Better than 0.5 μV for 35 dB S/N
		Better than 0.25 μV for 12 dB SINAD
	SSB, CW	Better than 0.5 μV for 20 dB S/N
Receiver selectivity	FM	More than 14 kHz (−6 dB)
		Less than 20 kHz (−60 dB)
	SSB, CW	More than 2.4 kHz (−6 dB)
		Less than 4.8 kHz (−60 dB)
Spurious interference	Better than 60 dB	
Squelch sensitivity	0.2 μV (Threshold)	
Auto scan stop level	Less than 0.2 μV (Threshold)	
Audio output	More than 2.0 watts across 8 ohms load (10% dist.)	

Note: Circuit and ratings are subject to change without notice due to developments in technology.

SV1BSX