ManualsPlus.com

R&S®RT-ZC10 Current Probe

User Manual

1409.7808.02 ─ 01

Test & Measurement

User Manual

ROHDE&SCHWARZ

ManualsPlus.com

This manual describes the following R&S products:

- R&S®RT-ZC10, Current Probe (1409.7750.02)
- R&S®RT-ZA13, Probe Power Supply (1409.7789.02)

© 2011 Rohde & Schwarz GmbH & Co. KG
Muehldorfstr. 15, 81671 Munich, Germany
Phone: +49 89 41 29 - 0
Fax: +49 89 41 29 12 164
E-mail: info@rohde-schwarz.com
Internet: http://www.rohde-schwarz.com
Printed in Germany – Subject to change – Data without tolerance limits is not binding.
R&S® is a registered trademark of Rohde & Schwarz GmbH & Co. KG.
Trade names are trademarks of the owners.

The following abbreviations are used in this manual: R&S®RT-ZC10 is abbreviated as R&S RT-ZC10, and R&S®RT-ZA13 is abbreviated as R&S RT-ZA13.

ManualsPlus.com

Basic Safety Instructions

Always read through and comply with the following safety instructions!

All plants and locations of the Rohde & Schwarz group of companies make every effort to keep the safety standards of our products up to date and to offer our customers the highest possible degree of safety. Our products and the auxiliary equipment they require are designed, built and tested in accordance with the safety standards that apply in each case. Compliance with these standards is continuously monitored by our quality assurance system. The product described here has been designed, built and tested in accordance with the attached EC Certificate of Conformity and has left the manufacturer's plant in a condition fully complying with safety standards. To maintain this condition and to ensure safe operation, you must observe all instructions and warnings provided in this manual. If you have any questions regarding these safety instructions, the Rohde & Schwarz group of companies will be happy to answer them.

Furthermore, it is your responsibility to use the product in an appropriate manner. This product is designed for use solely in industrial and laboratory environments or, if expressly permitted, also in the field and must not be used in any way that may cause personal injury or property damage. You are responsible if the product is used for any purpose other than its designated purpose or in disregard of the manufacturer's instructions. The manufacturer shall assume no responsibility for such use of the product.

The product is used for its designated purpose if it is used in accordance with its product documentation and within its performance limits (see data sheet, documentation, the following safety instructions). Using the product requires technical skills and, in some cases, a basic knowledge of English. It is therefore essential that only skilled and specialized staff or thoroughly trained personnel with the required skills be allowed to use the product. If personal safety gear is required for using Rohde & Schwarz products, this will be indicated at the appropriate place in the product documentation. Keep the basic safety instructions and the product documentation in a safe place and pass them on to the subsequent users.

Observing the safety instructions will help prevent personal injury or damage of any kind caused by dangerous situations. Therefore, carefully read through and adhere to the following safety instructions before and when using the product. It is also absolutely essential to observe the additional safety instructions on personal safety, for example, that appear in relevant parts of the product documentation. In these safety instructions, the word "product" refers to all merchandise sold and distributed by the Rohde & Schwarz group of companies, including instruments, systems and all accessories. For product-specific information, see the data sheet and the product documentation.

Symbols and safety labels

Symbol	Meaning	Symbol	Meaning
	Notice, general danger location Observe product documentation		ON/OFF supply voltage
	Caution when handling heavy equipment		Standby indication
	Danger of electric shock		Direct current (DC)

ManualsPlus.com

Symbol	Meaning	Symbol	Meaning
	Warning! Hot surface		Alternating current (AC)
	Protective conductor terminal		Direct/alternating current (DC/AC)
	Ground		Device fully protected by double (reinforced) insulation
	Ground terminal		EU labeling for batteries and accumulators For additional information, see section "Waste disposal/Environmental protection", item 1.
	Be careful when handling electrostatic sensitive devices		EU labeling for separate collection of electrical and electronic devices For additonal information, see section "Waste disposal/Environmental protection", item 2.
	Warning! Laser radiation For additional information, see section "Operation", item 7.		

Signal words and their meaning

The following signal words are used in the product documentation in order to warn the reader about risks and dangers.

DANGER — Indicates an imminently hazardous situation which, if not avoided, will result in death or serious injury.

WARNING — Indicates a potentially hazardous situation which, if not avoided, could result in death or serious injury.

CAUTION — Indicates a potentially hazardous situation which, if not avoided, could result in minor or moderate injury.

NOTICE — Indicates the possibility of incorrect operation which can result in damage to the product.
In the product documentation, the word ATTENTION is used synonymously.

These signal words are in accordance with the standard definition for civil applications in the European Economic Area. Definitions that deviate from the standard definition may also exist in other economic areas or military applications. It is therefore essential to make sure that the signal words described here are always used only in connection with the related product documentation and the related product. The use of signal words in connection with unrelated products or documentation can result in misinterpretation and in personal injury or material damage.

ManualsPlus.com

Operating states and operating positions

The product may be operated only under the operating conditions and in the positions specified by the manufacturer, without the product's ventilation being obstructed. If the manufacturer's specifications are not observed, this can result in electric shock, fire and/or serious personal injury or death. Applicable local or national safety regulations and rules for the prevention of accidents must be observed in all work performed.

1. Unless otherwise specified, the following requirements apply to Rohde & Schwarz products: predefined operating position is always with the housing floor facing down, IP protection 2X, use only indoors, max. operating altitude 2000 m above sea level, max. transport altitude 4500 m above sea level. A tolerance of ±10 % shall apply to the nominal voltage and ±5 % to the nominal frequency, overvoltage category 2, pollution severity 2.
2. Do not place the product on surfaces, vehicles, cabinets or tables that for reasons of weight or stability are unsuitable for this purpose. Always follow the manufacturer's installation instructions when installing the product and fastening it to objects or structures (e.g. walls and shelves). An installation that is not carried out as described in the product documentation could result in personal injury or even death.
3. Do not place the product on heat-generating devices such as radiators or fan heaters. The ambient temperature must not exceed the maximum temperature specified in the product documentation or in the data sheet. Product overheating can cause electric shock, fire and/or serious personal injury or even death.

Electrical safety

If the information on electrical safety is not observed either at all or to the extent necessary, electric shock, fire and/or serious personal injury or death may occur.

1. Prior to switching on the product, always ensure that the nominal voltage setting on the product matches the nominal voltage of the AC supply network. If a different voltage is to be set, the power fuse of the product may have to be changed accordingly.
2. In the case of products of safety class I with movable power cord and connector, operation is permitted only on sockets with a protective conductor contact and protective conductor.
3. Intentionally breaking the protective conductor either in the feed line or in the product itself is not permitted. Doing so can result in the danger of an electric shock from the product. If extension cords or connector strips are implemented, they must be checked on a regular basis to ensure that they are safe to use.
4. If there is no power switch for disconnecting the product from the AC supply network, or if the power switch is not suitable for this purpose, use the plug of the connecting cable to disconnect the product from the AC supply network. In such cases, always ensure that the power plug is easily reachable and accessible at all times. For example, if the power plug is the disconnecting device, the length of the connecting cable must not exceed 3 m. Functional or electronic switches are not suitable for providing disconnection from the AC supply network. If products without power switches are integrated into racks or systems, the disconnecting device must be provided at the system level.
5. Never use the product if the power cable is damaged. Check the power cables on a regular basis to ensure that they are in proper operating condition. By taking appropriate safety measures and carefully laying the power cable, ensure that the cable cannot be damaged and that no one can be hurt by, for example, tripping over the cable or suffering an electric shock.

ManualsPlus.com

6. The product may be operated only from TN/TT supply networks fuse-protected with max. 16 A (higher fuse only after consulting with the Rohde & Schwarz group of companies).
7. Do not insert the plug into sockets that are dusty or dirty. Insert the plug firmly and all the way into the socket provided for this purpose. Otherwise, sparks that result in fire and/or injuries may occur.
8. Do not overload any sockets, extension cords or connector strips; doing so can cause fire or electric shocks.
9. For measurements in circuits with voltages V_{rms} > 30 V, suitable measures (e.g. appropriate measuring equipment, fuse protection, current limiting, electrical separation, insulation) should be taken to avoid any hazards.
10. Ensure that the connections with information technology equipment, e.g. PCs or other industrial computers, comply with the IEC60950-1/EN60950-1 or IEC61010-1/EN 61010-1 standards that apply in each case.
11. Unless expressly permitted, never remove the cover or any part of the housing while the product is in operation. Doing so will expose circuits and components and can lead to injuries, fire or damage to the product.
12. If a product is to be permanently installed, the connection between the protective conductor terminal on site and the product's protective conductor must be made first before any other connection is made. The product may be installed and connected only by a licensed electrician.
13. For permanently installed equipment without built-in fuses, circuit breakers or similar protective devices, the supply circuit must be fuse-protected in such a way that anyone who has access to the product, as well as the product itself, is adequately protected from injury or damage.
14. Use suitable overvoltage protection to ensure that no overvoltage (such as that caused by a bolt of lightning) can reach the product. Otherwise, the person operating the product will be exposed to the danger of an electric shock.
15. Any object that is not designed to be placed in the openings of the housing must not be used for this purpose. Doing so can cause short circuits inside the product and/or electric shocks, fire or injuries.
16. Unless specified otherwise, products are not liquid-proof (see also section "Operating states and operating positions", item 1). Therefore, the equipment must be protected against penetration by liquids. If the necessary precautions are not taken, the user may suffer electric shock or the product itself may be damaged, which can also lead to personal injury.
17. Never use the product under conditions in which condensation has formed or can form in or on the product, e.g. if the product has been moved from a cold to a warm environment. Penetration by water increases the risk of electric shock.
18. Prior to cleaning the product, disconnect it completely from the power supply (e.g. AC supply network or battery). Use a soft, non-linting cloth to clean the product. Never use chemical cleaning agents such as alcohol, acetone or diluents for cellulose lacquers.

Operation

1. Operating the products requires special training and intense concentration. Make sure that persons who use the products are physically, mentally and emotionally fit enough to do so; otherwise, injuries or material damage may occur. It is the responsibility of the employer/operator to select suitable personnel for operating the products.

ManualsPlus.com

2. Before you move or transport the product, read and observe the section titled "Transport".
3. As with all industrially manufactured goods, the use of substances that induce an allergic reaction (allergens) such as nickel cannot be generally excluded. If you develop an allergic reaction (such as a skin rash, frequent sneezing, red eyes or respiratory difficulties) when using a Rohde & Schwarz product, consult a physician immediately to determine the cause and to prevent health problems or stress.
4. Before you start processing the product mechanically and/or thermally, or before you take it apart, be sure to read and pay special attention to the section titled "Waste disposal/Environmental protection", item 1.
5. Depending on the function, certain products such as RF radio equipment can produce an elevated level of electromagnetic radiation. Considering that unborn babies require increased protection, pregnant women must be protected by appropriate measures. Persons with pacemakers may also be exposed to risks from electromagnetic radiation. The employer/operator must evaluate workplaces where there is a special risk of exposure to radiation and, if necessary, take measures to avert the potential danger.
6. Should a fire occur, the product may release hazardous substances (gases, fluids, etc.) that can cause health problems. Therefore, suitable measures must be taken, e.g. protective masks and protective clothing must be worn.
7. Laser products are given warning labels that are standardized according to their laser class. Lasers can cause biological harm due to the properties of their radiation and due to their extremely concentrated electromagnetic power. If a laser product (e.g. a CD/DVD drive) is integrated into a Rohde & Schwarz product, absolutely no other settings or functions may be used as described in the product documentation. The objective is to prevent personal injury (e.g. due to laser beams).
8. EMC classes (in line with CISPR 11)
   Class A: Equipment suitable for use in all environments except residential environments and environments that are directly connected to a low-voltage supply network that supplies residential buildings.
   Class B: Equipment suitable for use in residential environments and environments that are directly connected to a low-voltage supply network that supplies residential buildings.

Repair and service

1. The product may be opened only by authorized, specially trained personnel. Before any work is performed on the product or before the product is opened, it must be disconnected from the AC supply network. Otherwise, personnel will be exposed to the risk of an electric shock.
2. Adjustments, replacement of parts, maintenance and repair may be performed only by electrical experts authorized by Rohde & Schwarz. Only original parts may be used for replacing parts relevant to safety (e.g. power switches, power transformers, fuses). A safety test must always be performed after parts relevant to safety have been replaced (visual inspection, protective conductor test, insulation resistance measurement, leakage current measurement, functional test). This helps ensure the continued safety of the product.

ManualsPlus.com

Batteries and rechargeable batteries/cells

If the information regarding batteries and rechargeable batteries/cells is not observed either at all or to the extent necessary, product users may be exposed to the risk of explosions, fire and/or serious personal injury, and, in some cases, death. Batteries and rechargeable batteries with alkaline electrolytes (e.g. lithium cells) must be handled in accordance with the EN 62133 standard.

1. Cells must not be taken apart or crushed.
2. Cells or batteries must not be exposed to heat or fire. Storage in direct sunlight must be avoided. Keep cells and batteries clean and dry. Clean soiled connectors using a dry, clean cloth.
3. Cells or batteries must not be short-circuited. Cells or batteries must not be stored in a box or in a drawer where they can short-circuit each other, or where they can be short-circuited by other conductive materials. Cells and batteries must not be removed from their original packaging until they are ready to be used.
4. Cells and batteries must not be exposed to any mechanical shocks that are stronger than permitted.
5. If a cell develops a leak, the fluid must not be allowed to come into contact with the skin or eyes. If contact occurs, wash the affected area with plenty of water and seek medical aid.
6. Improperly replacing or charging cells or batteries that contain alkaline electrolytes (e.g. lithium cells) can cause explosions. Replace cells or batteries only with the matching Rohde & Schwarz type (see parts list) in order to ensure the safety of the product.
7. Cells and batteries must be recycled and kept separate from residual waste. Rechargeable batteries and normal batteries that contain lead, mercury or cadmium are hazardous waste. Observe the national regulations regarding waste disposal and recycling.

Transport

1. The product may be very heavy. Therefore, the product must be handled with care. In some cases, the user may require a suitable means of lifting or moving the product (e.g. with a lift-truck) to avoid back or other physical injuries.
2. Handles on the products are designed exclusively to enable personnel to transport the product. It is therefore not permissible to use handles to fasten the product to or on transport equipment such as cranes, fork lifts, wagons, etc. The user is responsible for securely fastening the products to or on the means of transport or lifting. Observe the safety regulations of the manufacturer of the means of transport or lifting. Noncompliance can result in personal injury or material damage.
3. If you use the product in a vehicle, it is the sole responsibility of the driver to drive the vehicle safely and properly. The manufacturer assumes no responsibility for accidents or collisions. Never use the product in a moving vehicle if doing so could distract the driver of the vehicle. Adequately secure the product in the vehicle to prevent injuries or other damage in the event of an accident.

Waste disposal/Environmental protection

1. Specially marked equipment has a battery or accumulator that must not be disposed of with unsorted municipal waste, but must be collected separately. It may only be disposed of at a suitable collection point or via a Rohde & Schwarz customer service center.

ManualsPlus.com

2. Waste electrical and electronic equipment must not be disposed of with unsorted municipal waste, but must be collected separately.
   Rohde & Schwarz GmbH & Co. KG has developed a disposal concept and takes full responsibility for take-back obligations and disposal obligations for manufacturers within the EU. Contact your Rohde & Schwarz customer service center for environmentally responsible disposal of the product.
3. If products or their components are mechanically and/or thermally processed in a manner that goes beyond their intended use, hazardous substances (heavy-metal dust such as lead, beryllium, nickel) may be released. For this reason, the product may only be disassembled by specially trained personnel. Improper disassembly may be hazardous to your health. National waste disposal regulations must be observed.
4. If handling the product releases hazardous substances or fuels that must be disposed of in a special way, e.g. coolants or engine oils that must be replenished regularly, the safety instructions of the manufacturer of the hazardous substances or fuels and the applicable regional waste disposal regulations must be observed. Also observe the relevant safety instructions in the product documentation. The improper disposal of hazardous substances or fuels can cause health problems and lead to environmental damage.

For additional information about environmental protection, visit the Rohde & Schwarz website.

Instrucciones de seguridad elementales

¡Es imprescindible leer y cumplir las siguientes instrucciones e informaciones de seguridad!

El principio del grupo de empresas Rohde & Schwarz consiste en tener nuestros productos siempre al día con los estándares de seguridad y de ofrecer a nuestros clientes el máximo grado de seguridad. Nuestros productos y todos los equipos adicionales son siempre fabricados y examinados según las normas de seguridad vigentes. Nuestro sistema de garantía de calidad controla constantemente que sean cumplidas estas normas. El presente producto ha sido fabricado y examinado según el certificado de conformidad adjunto de la UE y ha salido de nuestra planta en estado impecable según los estándares técnicos de seguridad. Para poder preservar este estado y garantizar un funcionamiento libre de peligros, el usuario deberá atenerse a todas las indicaciones, informaciones de seguridad y notas de alerta. El grupo de empresas Rohde & Schwarz está siempre a su disposición en caso de que tengan preguntas referentes a estas informaciones de seguridad.

Además queda en la responsabilidad del usuario utilizar el producto en la forma debida. Este producto está destinado exclusivamente al uso en la industria y el laboratorio o, si ha sido expresamente autorizado, para aplicaciones de campo y de ninguna manera deberá ser utilizado de modo que alguna persona/cosa pueda sufrir daño. El uso del producto fuera de sus fines definidos o sin tener en cuenta las instrucciones del fabricante queda en la responsabilidad del usuario. El fabricante no se hace en ninguna forma responsable de consecuencias a causa del mal uso del producto.

ManualsPlus.com

Se parte del uso correcto del producto para los fines definidos si el producto es utilizado conforme a las indicaciones de la correspondiente documentación del producto y dentro del margen de rendimiento definido (ver hoja de datos, documentación, informaciones de seguridad que siguen). El uso del producto hace necesarios conocimientos técnicos y ciertos conocimientos del idioma inglés. Por eso se debe tener en cuenta que el producto solo pueda ser operado por personal especializado o personas instruidas en profundidad con las capacidades correspondientes. Si fuera necesaria indumentaria de seguridad para el uso de productos de Rohde & Schwarz, encontraría la información debida en la documentación del producto en el capítulo correspondiente. Guarde bien las informaciones de seguridad elementales, así como la documentación del producto, y entréguelas a usuarios posteriores.

Tener en cuenta las informaciones de seguridad sirve para evitar en lo posible lesiones o daños por peligros de toda clase. Por eso es imprescindible leer detalladamente y comprender por completo las siguientes informaciones de seguridad antes de usar el producto, y respetarlas durante el uso del producto. Deberán tenerse en cuenta todas las demás informaciones de seguridad, como p. ej. las referentes a la protección de personas, que encontrarán en el capítulo correspondiente de la documentación del producto y que también son de obligado cumplimiento. En las presentes informaciones de seguridad se recogen todos los objetos que distribuye el grupo de empresas Rohde & Schwarz bajo la denominación de "producto", entre ellos también aparatos, instalaciones así como toda clase de accesorios. Los datos específicos del producto figuran en la hoja de datos y en la documentación del producto.

Símbolos y definiciones de seguridad

Símbolo	Significado	Símbolo	Significado
	Aviso: punto de peligro general Observar la documentación del producto		Tensión de alimentación de PUESTA EN MARCHA / PARADA
18 kg	Atención en el manejo de dispositivos de peso elevado		Indicación de estado de espera (standby)
	Peligro de choque eléctrico		Corriente continua (DC)
	Advertencia: superficie caliente		Corriente alterna (AC)
	Conexión a conductor de protección		Corriente continua / Corriente alterna (DC/AC)
	Conexión a tierra		El aparato está protegido en su totalidad por un aislamiento doble (reforzado)
	Conexión a masa		Distintivo de la UE para baterías y acumuladores Más información en la sección "Eliminación/protección del medio ambiente", punto 1.

ManualsPlus.com

Símbolo	Significado	Símbolo	Significado
	Aviso: Cuidado en el manejo de dispositivos sensibles a la electrostática (ESD)		Distintivo de la UE para la eliminación por separado de dispositivos eléctricos y electrónicos Más información en la sección "Eliminación/protección del medio ambiente", punto 2.
	Advertencia: rayo láser Más información en la sección "Funcionamiento", punto 7.		

Palabras de señal y su significado

En la documentación del producto se utilizan las siguientes palabras de señal con el fin de advertir contra riesgos y peligros.

PELIGRO — PELIGRO identifica un peligro inminente con riesgo elevado que provocará muerte o lesiones graves si no se evita.

ADVERTENCIA — ADVERTENCIA identifica un posible peligro con riesgo medio de provocar muerte o lesiones (graves) si no se evita.

ATENCIÓN — ATENCIÓN identifica un peligro con riesgo reducido de provocar lesiones leves o moderadas si no se evita.

AVISO — AVISO indica la posibilidad de utilizar mal el producto y, como consecuencia, dañarlo.
En la documentación del producto se emplea de forma sinónima el término CUIDADO.

Las palabras de señal corresponden a la definición habitual para aplicaciones civiles en el área económica europea. Pueden existir definiciones diferentes a esta definición en otras áreas económicas o en aplicaciones militares. Por eso se deberá tener en cuenta que las palabras de señal aquí descritas sean utilizadas siempre solamente en combinación con la correspondiente documentación del producto y solamente en combinación con el producto correspondiente. La utilización de las palabras de señal en combinación con productos o documentaciones que no les correspondan puede llevar a interpretaciones equivocadas y tener por consecuencia daños en personas u objetos.

Estados operativos y posiciones de funcionamiento

El producto solamente debe ser utilizado según lo indicado por el fabricante respecto a los estados operativos y posiciones de funcionamiento sin que se obstruya la ventilación. Si no se siguen las indicaciones del fabricante, pueden producirse choques eléctricos, incendios y/o lesiones graves con posible consecuencia de muerte. En todos los trabajos deberán ser tenidas en cuenta las normas nacionales y locales de seguridad del trabajo y de prevención de accidentes.

ManualsPlus.com

1. Si no se convino de otra manera, es para los productos Rohde & Schwarz válido lo que sigue: como posición de funcionamiento se define por principio la posición con el suelo de la caja para abajo, modo de protección IP 2X, uso solamente en estancias interiores, utilización hasta 2000 m sobre el nivel del mar, transporte hasta 4500 m sobre el nivel del mar. Se aplicará una tolerancia de ±10 % sobre el voltaje nominal y de ±5 % sobre la frecuencia nominal. Categoría de sobrecarga eléctrica 2, índice de suciedad 2.
2. No sitúe el producto encima de superficies, vehículos, estantes o mesas, que por sus características de peso o de estabilidad no sean aptos para él. Siga siempre las instrucciones de instalación del fabricante cuando instale y asegure el producto en objetos o estructuras (p. ej. paredes y estantes). Si se realiza la instalación de modo distinto al indicado en la documentación del producto, se pueden causar lesiones o, en determinadas circunstancias, incluso la muerte.
3. No ponga el producto sobre aparatos que generen calor (p. ej. radiadores o calefactores). La temperatura ambiente no debe superar la temperatura máxima especificada en la documentación del producto o en la hoja de datos. En caso de sobrecalentamiento del producto, pueden producirse choques eléctricos, incendios y/o lesiones graves con posible consecuencia de muerte.

Seguridad eléctrica

Si no se siguen (o se siguen de modo insuficiente) las indicaciones del fabricante en cuanto a seguridad eléctrica, pueden producirse choques eléctricos, incendios y/o lesiones graves con posible consecuencia de muerte.

1. Antes de la puesta en marcha del producto se deberá comprobar siempre que la tensión preseleccionada en el producto coincida con la de la red de alimentación eléctrica. Si es necesario modificar el ajuste de tensión, también se deberán cambiar en caso dado los fusibles correspondientes del producto.
2. Los productos de la clase de protección I con alimentación móvil y enchufe individual solamente podrán enchufarse a tomas de corriente con contacto de seguridad y con conductor de protección conectado.
3. Queda prohibida la interrupción intencionada del conductor de protección, tanto en la toma de corriente como en el mismo producto. La interrupción puede tener como consecuencia el riesgo de que el producto sea fuente de choques eléctricos. Si se utilizan cables alargadores o regletas de enchufe, deberá garantizarse la realización de un examen regular de los mismos en cuanto a su estado técnico de seguridad.
4. Si el producto no está equipado con un interruptor para desconectarlo de la red, o bien si el interruptor existente no resulta apropiado para la desconexión de la red, el enchufe del cable de conexión se deberá considerar como un dispositivo de desconexión.
   El dispositivo de desconexión se debe poder alcanzar fácilmente y debe estar siempre bien accesible. Si, p. ej., el enchufe de conexión a la red es el dispositivo de desconexión, la longitud del cable de conexión no debe superar 3 m).
   Los interruptores selectores o electrónicos no son aptos para el corte de la red eléctrica. Si se integran productos sin interruptor en bastidores o instalaciones, se deberá colocar el interruptor en el nivel de la instalación.
5. No utilice nunca el producto si está dañado el cable de conexión a red. Compruebe regularmente el correcto estado de los cables de conexión a red. Asegúrese, mediante las medidas de protección y de instalación adecuadas, de que el cable de conexión a red no pueda ser dañado o de que nadie pueda ser dañado por él, p. ej. al tropezar o por un choque eléctrico.

ManualsPlus.com

6. Solamente está permitido el funcionamiento en redes de alimentación TN/TT aseguradas con fusibles de 16 A como máximo (utilización de fusibles de mayor amperaje solo previa consulta con el grupo de empresas Rohde & Schwarz).
7. Nunca conecte el enchufe en tomas de corriente sucias o llenas de polvo. Introduzca el enchufe por completo y fuertemente en la toma de corriente. La no observación de estas medidas puede provocar chispas, fuego y/o lesiones.
8. No sobrecargue las tomas de corriente, los cables alargadores o las regletas de enchufe ya que esto podría causar fuego o choques eléctricos.
9. En las mediciones en circuitos de corriente con una tensión U_{eff} > 30 V se deberán tomar las medidas apropiadas para impedir cualquier peligro (p. ej. medios de medición adecuados, seguros, limitación de tensión, corte protector, aislamiento etc.).
10. Para la conexión con dispositivos informáticos como un PC o un ordenador industrial, debe comprobarse que éstos cumplan los estándares IEC60950-1/EN60950-1 o IEC61010-1/EN 61010-1 válidos en cada caso.
11. A menos que esté permitido expresamente, no retire nunca la tapa ni componentes de la carcasa mientras el producto esté en servicio. Esto pone a descubierto los cables y componentes eléctricos y puede causar lesiones, fuego o daños en el producto.
12. Si un producto se instala en un lugar fijo, se deberá primero conectar el conductor de protección fijo con el conductor de protección del producto antes de hacer cualquier otra conexión. La instalación y la conexión deberán ser efectuadas por un electricista especializado.
13. En el caso de dispositivos fijos que no estén provistos de fusibles, interruptor automático ni otros mecanismos de seguridad similares, el circuito de alimentación debe estar protegido de modo que todas las personas que puedan acceder al producto, así como el producto mismo, estén a salvo de posibles daños.
14. Todo producto debe estar protegido contra sobretensión (debida p. ej. a una caída del rayo) mediante los correspondientes sistemas de protección. Si no, el personal que lo utilice quedará expuesto al peligro de choque eléctrico.
15. No debe introducirse en los orificios de la caja del aparato ningún objeto que no esté destinado a ello. Esto puede producir cortocircuitos en el producto y/o puede causar choques eléctricos, fuego o lesiones.
16. Salvo indicación contraria, los productos no están impermeabilizados (ver también el capítulo "Estados operativos y posiciones de funcionamiento", punto 1). Por eso es necesario tomar las medidas necesarias para evitar la entrada de líquidos. En caso contrario, existe peligro de choque eléctrico para el usuario o de daños en el producto, que también pueden redundar en peligro para las personas.
17. No utilice el producto en condiciones en las que pueda producirse o ya se hayan producido condensaciones sobre el producto o en el interior de éste, como p. ej. al desplazarlo de un lugar frío a otro caliente. La entrada de agua aumenta el riesgo de choque eléctrico.
18. Antes de la limpieza, desconecte por completo el producto de la alimentación de tensión (p. ej. red de alimentación o batería). Realice la limpieza de los aparatos con un paño suave, que no se deshilache. No utilice bajo ningún concepto productos de limpieza químicos como alcohol, acetona o diluyentes para lacas nitrocelulósicas.

ManualsPlus.com

Funcionamiento

1. El uso del producto requiere instrucciones especiales y una alta concentración durante el manejo. Debe asegurarse que las personas que manejen el producto estén a la altura de los requerimientos necesarios en cuanto a aptitudes físicas, psíquicas y emocionales, ya que de otra manera no se pueden excluir lesiones o daños de objetos. El empresario u operador es responsable de seleccionar el personal usuario apto para el manejo del producto.
2. Antes de desplazar o transportar el producto, lea y tenga en cuenta el capítulo "Transporte".
3. Como con todo producto de fabricación industrial no puede quedar excluida en general la posibilidad de que se produzcan alergias provocadas por algunos materiales empleados —los llamados alérgenos (p. ej. el níquel)—. Si durante el manejo de productos Rohde & Schwarz se producen reacciones alérgicas, como p. ej. irritaciones cutáneas, estornudos continuos, enrojecimiento de la conjuntiva o dificultades respiratorias, debe avisarse inmediatamente a un médico para investigar las causas y evitar cualquier molestia o daño a la salud.
4. Antes de la manipulación mecánica y/o térmica o el desmontaje del producto, debe tenerse en cuenta imprescindiblemente el capítulo "Eliminación/protección del medio ambiente", punto 1.
5. Ciertos productos, como p. ej. las instalaciones de radiocomunicación RF, pueden a causa de su función natural, emitir una radiación electromagnética aumentada. Deben tomarse todas las medidas necesarias para la protección de las mujeres embarazadas. También las personas con marcapasos pueden correr peligro a causa de la radiación electromagnética. El empresario/operador tiene la obligación de evaluar y señalizar las áreas de trabajo en las que exista un riesgo elevado de exposición a radiaciones.
6. Tenga en cuenta que en caso de incendio pueden desprenderse del producto sustancias tóxicas (gases, líquidos etc.) que pueden generar daños a la salud. Por eso, en caso de incendio deben usarse medidas adecuadas, como p. ej. máscaras antigás e indumentaria de protección.
7. Los productos con láser están provistos de indicaciones de advertencia normalizadas en función de la clase de láser del que se trate. Los rayos láser pueden provocar daños de tipo biológico a causa de las propiedades de su radiación y debido a su concentración extrema de potencia electromagnética. En caso de que un producto Rohde & Schwarz contenga un producto láser (p. ej. un lector de CD/DVD), no debe usarse ninguna otra configuración o función aparte de las descritas en la documentación del producto, a fin de evitar lesiones (p. ej. debidas a irradiación láser).
8. Clases CEM (según CISPR 11)
   Clase A: dispositivo apropiado para el uso en cualquier zona excepto en áreas residenciales y en aquellas zonas que se encuentran conectadas a una red de suministro de baja tensión que alimenta un edificio de viviendas.
   Clase B: dispositivo apropiado para el uso en áreas residenciales y en aquellas zonas que se encuentran conectadas a una red de suministro de baja tensión que alimenta un edificio de viviendas.

Reparación y mantenimiento

1. El producto solamente debe ser abierto por personal especializado con autorización para ello. Antes de manipular el producto o abrirlo, es obligatorio desconectarlo de la tensión de alimentación, para evitar toda posibilidad de choque eléctrico.

ManualsPlus.com

2. El ajuste, el cambio de partes, el mantenimiento y la reparación deberán ser efectuadas solamente por electricistas autorizados por Rohde & Schwarz. Si se reponen partes con importancia para los aspectos de seguridad (p. ej. el enchufe, los transformadores o los fusibles), solamente podrán ser sustituidos por partes originales. Después de cada cambio de partes relevantes para la seguridad deberá realizarse un control de seguridad (control a primera vista, control del conductor de protección, medición de resistencia de aislamiento, medición de la corriente de fuga, control de funcionamiento). Con esto queda garantizada la seguridad del producto.

Baterías y acumuladores o celdas

Si no se siguen (o se siguen de modo insuficiente) las indicaciones en cuanto a las baterías y acumuladores o celdas, pueden producirse explosiones, incendios y/o lesiones graves con posible consecuencia de muerte. El manejo de baterías y acumuladores con electrolitos alcalinos (p. ej. celdas de litio) debe seguir el estándar EN 62133.

1. No deben desmontarse, abrirse ni triturarse las celdas.
2. Las celdas o baterías no deben someterse a calor ni fuego. Debe evitarse el almacenamiento a la luz directa del sol. Las celdas y baterías deben mantenerse limpias y secas. Limpiar las conexiones sucias con un paño seco y limpio.
3. Las celdas o baterías no deben cortocircuitarse. Es peligroso almacenar las celdas o baterías en estuches o cajones en cuyo interior puedan cortocircuitarse por contacto recíproco o por contacto con otros materiales conductores. No deben extraerse las celdas o baterías de sus embalajes originales hasta el momento en que vayan a utilizarse.
4. Las celdas o baterías no deben someterse a impactos mecánicos fuertes indebidos.
5. En caso de falta de estanqueidad de una celda, el líquido vertido no debe entrar en contacto con la piel ni los ojos. Si se produce contacto, lavar con agua abundante la zona afectada y avisar a un médico.
6. En caso de cambio o recarga inadecuados, las celdas o baterías que contienen electrolitos alcalinos (p. ej. las celdas de litio) pueden explotar. Para garantizar la seguridad del producto, las celdas o baterías solo deben ser sustituidas por el tipo Rohde & Schwarz correspondiente (ver lista de recambios).
7. Las baterías y celdas deben reciclarse y no deben tirarse a la basura doméstica. Las baterías o acumuladores que contienen plomo, mercurio o cadmio deben tratarse como residuos especiales. Respete en esta relación las normas nacionales de eliminación y reciclaje.

Transporte

1. El producto puede tener un peso elevado. Por eso es necesario desplazarlo o transportarlo con precaución y, si es necesario, usando un sistema de elevación adecuado (p. ej. una carretilla elevadora), a fin de evitar lesiones en la espalda u otros daños personales.
2. Las asas instaladas en los productos sirven solamente de ayuda para el transporte del producto por personas. Por eso no está permitido utilizar las asas para la sujeción en o sobre medios de transporte como p. ej. grúas, carretillas elevadoras de horquilla, carros etc. Es responsabilidad suya fijar los productos de manera segura a los medios de transporte o elevación. Para evitar daños personales o daños en el producto, siga las instrucciones de seguridad del fabricante del medio de transporte o elevación utilizado.

ManualsPlus.com

3. Si se utiliza el producto dentro de un vehículo, recae de manera exclusiva en el conductor la responsabilidad de conducir el vehículo de manera segura y adecuada. El fabricante no asumirá ninguna responsabilidad por accidentes o colisiones. No utilice nunca el producto dentro de un vehículo en movimiento si esto pudiera distraer al conductor. Asegure el producto dentro del vehículo debidamente para evitar, en caso de un accidente, lesiones u otra clase de daños.

Eliminación/protección del medio ambiente

1. Los dispositivos marcados contienen una batería o un acumulador que no se debe desechar con los residuos domésticos sin clasificar, sino que debe ser recogido por separado. La eliminación se debe efectuar exclusivamente a través de un punto de recogida apropiado o del servicio de atención al cliente de Rohde & Schwarz.
2. Los dispositivos eléctricos usados no se deben desechar con los residuos domésticos sin clasificar, sino que deben ser recogidos por separado.
   Rohde & Schwarz GmbH & Co.KG ha elaborado un concepto de eliminación de residuos y asume plenamente los deberes de recogida y eliminación para los fabricantes dentro de la UE. Para desechar el producto de manera respetuosa con el medio ambiente, diríjase a su servicio de atención al cliente de Rohde & Schwarz.
3. Si se trabaja de manera mecánica y/o térmica cualquier producto o componente más allá del funcionamiento previsto, pueden liberarse sustancias peligrosas (polvos con contenido de metales pesados como p. ej. plomo, berilio o níquel). Por eso el producto solo debe ser desmontado por personal especializado con formación adecuada. Un desmontaje inadecuado puede ocasionar daños para la salud. Se deben tener en cuenta las directivas nacionales referentes a la eliminación de residuos.
4. En caso de que durante el trato del producto se formen sustancias peligrosas o combustibles que deban tratarse como residuos especiales (p. ej. refrigerantes o aceites de motor con intervalos de cambio definidos), deben tenerse en cuenta las indicaciones de seguridad del fabricante de dichas sustancias y las normas regionales de eliminación de residuos. Tenga en cuenta también en caso necesario las indicaciones de seguridad especiales contenidas en la documentación del producto. La eliminación incorrecta de sustancias peligrosas o combustibles puede causar daños a la salud o daños al medio ambiente.

Se puede encontrar más información sobre la protección del medio ambiente en la página web de Rohde & Schwarz.

ManualsPlus.com

Instructions for Electrostatic Discharge Protection

NOTICE

Risk of damaging electronic components

To avoid damage of electronic components, the operational site must be protected against electrostatic discharge (ESD).

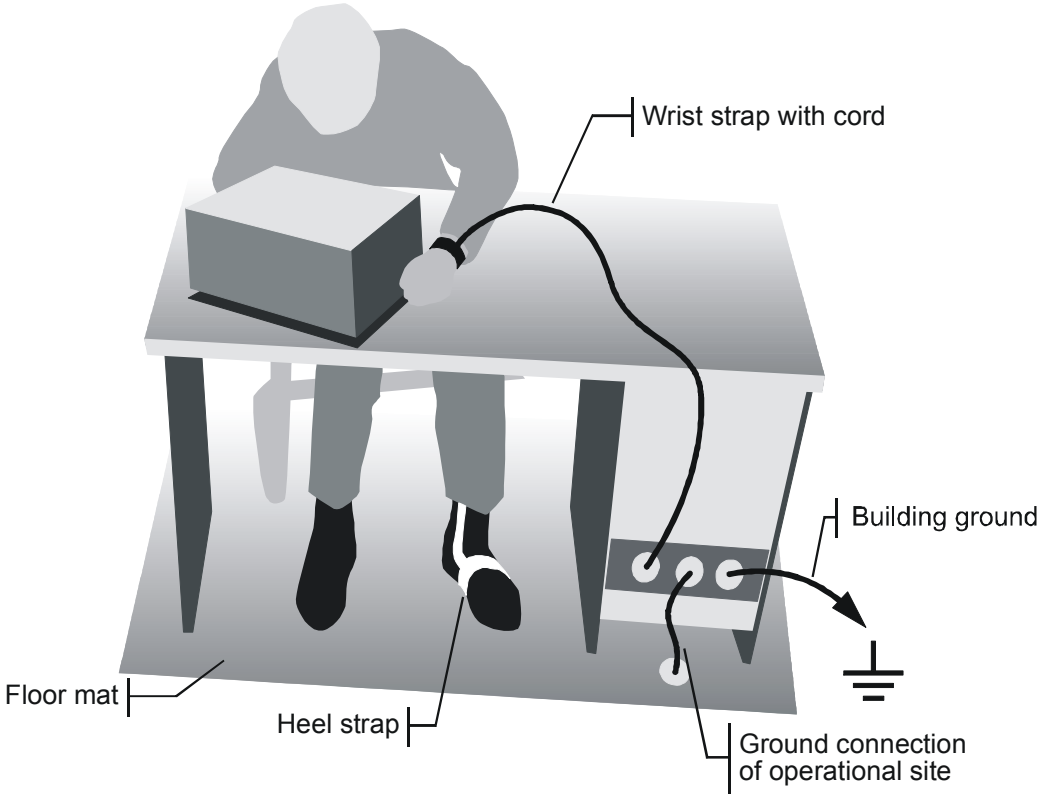

The following two methods of ESD protection may be used together or separately:

- Wrist strap with cord to ground connection
- Conductive floor mat and heel strap combination

ManualsPlus.com

Instrucciones para la protección contra descargas electroestáticas

AVISO

Riesgo de avería de los componentes electrónicos

Para evitar averías en los componentes electrónicos, el área de trabajo tiene que estar protegido contra descargas electroestáticas ESD (electrostatic discharge).

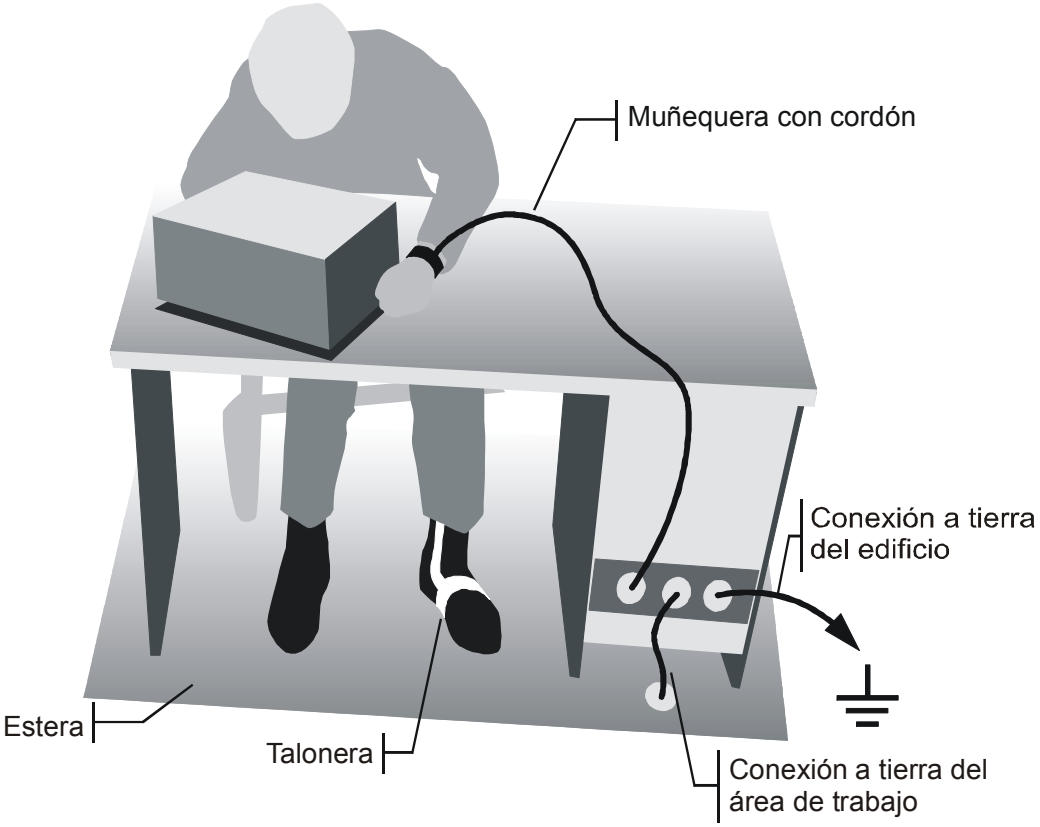

Los siguientes dos métodos de protección ESD pueden ser usados juntos o separados:

- Muñequera con cordón para conexión a tierra
- Combinación de estera antiestática y talonera

ManualsPlus.com

Customer Support

Technical support – where and when you need it

For quick, expert help with any Rohde & Schwarz equipment, contact one of our Customer Support Centers. A team of highly qualified engineers provides telephone support and will work with you to find a solution to your query on any aspect of the operation, programming or applications of Rohde & Schwarz equipment.

Up-to-date information and upgrades

To keep your instrument up-to-date and to be informed about new application notes related to your instrument, please send an e-mail to the Customer Support Center stating your instrument and your wish.
We will take care that you will get the right information.

Europe, Africa, Middle East
Phone +49 89 4129 12345
customersupport@rohde-schwarz.com

North America
Phone 1-888-TEST-RSA (1-888-837-8772)
customer.support@rsa.rohde-schwarz.com

Latin America
Phone +1-410-910-7988
customersupport.la@rohde-schwarz.com

Asia/Pacific
Phone +65 65 13 04 88
customersupport.asia@rohde-schwarz.com

China
Phone +86-800-810-8228 /
+86-400-650-5896
customersupport.china@rohde-schwarz.com

ROHDE&SCHWARZ

1171.0500.22-06.00

ManualsPlus.com

Contents

1 Notes on Safety.....5

1.1 Measurement categories (Overvoltage categories).....5

1.2 Precautions.....6

2 Product Description.....11

2.1 Product Overview.....11

2.2 Key Features.....11

2.3 Inspecting the Contents.....11

2.4 Description of the Probe.....12

3 Putting into Operation.....15

3.1 Preparing the Measurement.....15

3.2 Connecting the Probe to R&S Oscilloscopes.....16

3.2.1 Connecting to R&S RTO.....16

3.2.2 Connecting to R&S RTM.....18

3.3 Demagnetizing and Zero Adjustment.....20

3.4 Connecting the Probe to the DUT.....21

4 Maintenance and Service.....26

4.1 Service Strategy.....26

4.2 Returning the Probe for Servicing.....26

4.3 Cleaning.....27

4.4 Calibration Interval.....27

5 R&S RT-ZA13 Probe Power Supply.....28

ManualsPlus.com

ManualsPlus.com

1 Notes on Safety

Thank you for purchasing the R&S RT-ZC10 current probe.

To obtain maximum performance from the device, please read this manual first, and keep it handy for future reference.

WARNING

Risk of physical injury

This device is designed to comply with IEC 61010 Safety Standards, and has been thoroughly tested for safety prior to shipment. However, mishandling during use could result in injury or death, as well as damage to the device. Be certain that you understand the instructions and precautions in the manual before use.

This device conforms to the safety requirements for CAT II (600 V), CAT III (300 V) measurement instruments.

1.1 Measurement categories (Overvoltage categories)

To ensure safe operation of measurement devices, IEC 61010 establishes safety standards for various electrical environments, categorized as CAT I to CAT IV, and called measurement categories. These are defined as follows.

CAT I: Secondary electrical circuits connected to an electrical outlet through a transformer or similar device.

CAT II: Primary electrical circuits in equipment connected to an AC electrical outlet by a power cord (portable tools, household appliances, etc.).

CAT III: Primary electrical circuits of heavy equipment (fixed installations) connected directly to the distribution panel, and feeders between the distribution panel and outlets.

CAT IV: The circuit from the service drop to the service entrance, then to the power meter and to the primary overcurrent protection instrument.

ManualsPlus.com

Higher-numbered categories correspond to electrical environments with greater momentary energy. So a measurement device designed for CAT III environments can endure greater momentary energy than a device designed for CAT II.

Using a measurement device in an environment designated with a higher-numbered category than that for which the device is rated could result in a severe accident, and must be carefully avoided.

Never use a CAT I measuring device in CAT II, III, or IV environments.

The measurement categories comply with the Overvoltage Categories of the IEC60664 Standards.

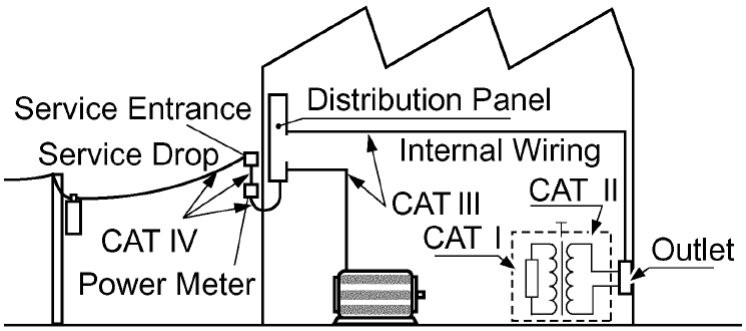

Fixed Installation

1.2 Precautions

Follow these precautions to ensure safe operation and to obtain the full benefits of the various functions.

ManualsPlus.com

DANGER

Risk of fatal injury

- To avoid short circuits and potentially life-threatening hazards never attach the clamp to a circuit that operates at more than the maximum rated voltage to earth.
- For your safety, avoid clamping around bare conductors, while clamping or measuring.
- While clamping and measuring, do not touch the clamp in front of the barrier or the conductor being measured.
- Be careful to avoid damaging the insulation surface while taking measurements.
- This device is made for use with the R&S RT-ZA13 probe power supply. It is possible to use a power supply other than the R&S RT-ZA13 probe power supply, provided that the connector and pin assignments match, and that voltage and other electrical specifications are satisfied. In the interest of safety, make sure that the power supply has a protective earthing with double-insulation construction.

ManualsPlus.com

DANGER

Risk of fatal injury

- Make sure that the waveform measuring equipment connected to this device's output terminal (BNC) is equipped with a protective earthing with double-insulation construction.
- If the waveform measuring instrument being connected to the output terminal (BNC) on this device is equipped with any other measurement terminals, take the following precautions to ensure that the other instrument does not form a bridge between the probe and any hazardous live of a part.
  - Isolate the terminal to which the probe is connected from other terminals on the measuring instrument using basic insulation conforming to the measurement category, working voltage, and pollution degree requirements of the circuit being tested.
  - If basic insulation requirements cannot be met between the terminal to which this device is connected and other terminals of the measuring instrument, make sure that the voltage input to the measurement terminal does not exceed the Separated Extra-Low Voltage Earthed (SELV-E).
  - Read and observe all warnings and precautions relating to electrical safety for the measuring instrument being connected to the probe.
- Refer to the following standards:
  - IEC 61010-1
  - IEC 61010-031
  - IEC 61010-2-032
- Be sure to observe all operating precautions for the waveform monitoring instrument (oscilloscope or recorder) and other measurement instruments to which this device is connected.
- When using a measurement instrument that does not provide isolation between its input terminals and chassis or other input terminals, please pay attention to the following points. If a signal is applied to an input terminal other than that to which this device is connected, do not connect the ground-side terminal to any nonground potential. Otherwise, short-circuit current will flow through the R&S RT-ZA13 probe power supply, or this device from the ground terminal, which could cause an electrical accident or damage.

ManualsPlus.com

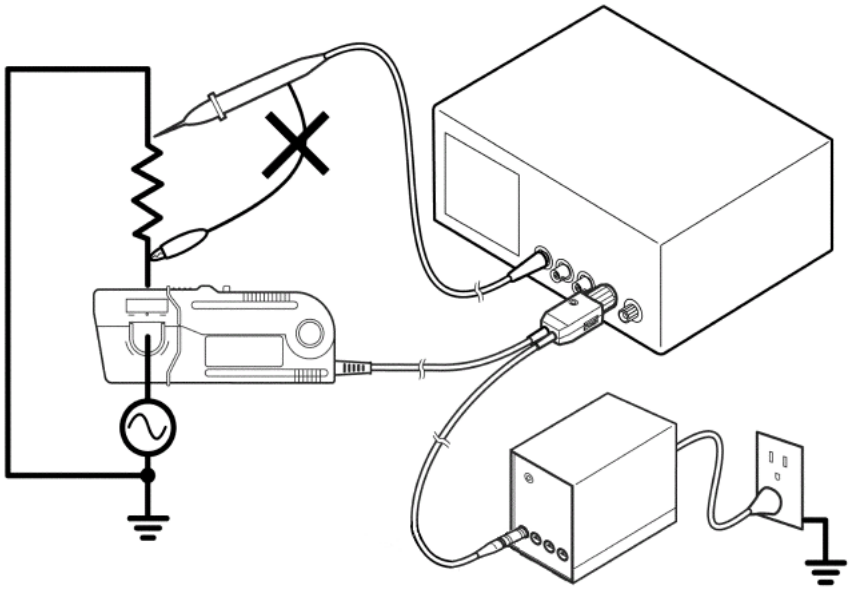

WARNING

Shock hazard

Do not allow the device to get wet, and do not take measurements with wet hands. This may cause an electric shock.

To avoid electric shock when measuring live lines, wear appropriate protective gear, such as insulated rubber gloves, boots and a safety helmet.

ManualsPlus.com

NOTICE

Risk of instrument damage

- To avoid damage to the device, protect it from vibration or shock during transport and handling, and be especially careful to avoid dropping.
- Do not store or use the device where it could be exposed to direct sunlight, high temperature, humidity, or condensation. Under such conditions, the device may be damaged and insulation may deteriorate so that it no longer meets its specifications.
- Before using the device the first time, verify that it operates normally to ensure that no damage occurred during storage or shipping. If you find any damage, contact your dealer or R&S representative.
- This device is not designed to be entirely water- or dust- proof. To avoid damage, do not use it in a wet or dusty environment.
- The sensor head is a precision assembly including a molded component, a ferrite core, and a Hall effect element. It may be damaged if subjected to sudden changes in ambient temperature, or mechanical strain or shock, and therefore great care should be exercised in handling it.
- The mating surfaces of the sensor head are precision, and should be treated with care. If these surfaces are scratched, performance may be impaired.
- Foreign substances such as dust on the contact surfaces of the sensor head can cause acoustic resonance and degrade measurement, so it should be cleaned by gently wiping with a soft cloth.
- When the power is on, keep the core section of the sensor closed, except when clamping it onto the conductor to be measured. The mating surface of the core section can be scratched while it is open.
- To avoid damaging the sensor cable and power supply cable, do not bend or pull the cables.

Strong electromagnetic fields

Correct measurement may be impossible in the presence of strong magnetic fields, such as near transformers and high-current conductors, or in the presence of strong electromagnetic fields such as near radio transmitters.

ManualsPlus.com

2 Product Description

2.1 Product Overview

This device can be directly connected to a BNC input connector of a waveform measuring instrument such as an oscilloscope or recorder. By clamping on a conductor to be measured, the current waveform can easily be captured.

2.2 Key Features

- Highly accurate current detection.
- Easy current measurement.
- Broadband frequency characteristics DC to 10 MHz.
- Large diameter allows high-current measurements.
- Easy protection function to avoid self-heating during excessive input.
- Unique thin film Hall effect element.

2.3 Inspecting the Contents

- Inspect the package for damage.
  Keep a damaged package and the cushioning material until the contents have been checked for completeness and the instrument has been tested.
  If the packaging material shows any signs of stress, notify the carrier as well as your Rohde & Schwarz service center. Keep the package and cushioning material for inspection.
- Inspect the probe.
  If there is any damage or defect, or if the R&S RT-ZC10 current probe does not operate properly, notify your Rohde & Schwarz service center.
- Inspect the accessories.
  If the contents are incomplete or damaged, notify your Rohde & Schwarz service center.

ManualsPlus.com

The following accessories are delivered with the probe:
- User manual
- Carrying case

2.4 Description of the Probe

External view

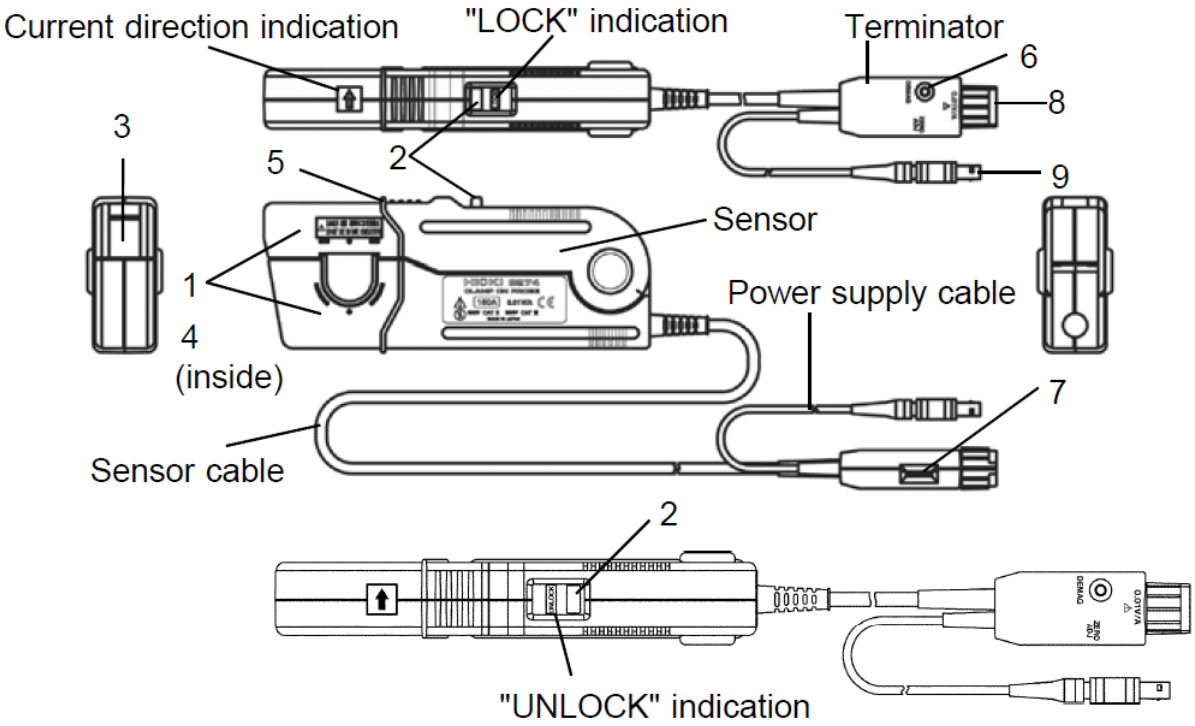

1 = Clamp
2 = Slider
3 = Lever
4 = Sensor head
5 = Barrier
6 = Demagnetizing switch (DEMAG)
7 = Zero adjustment dial (ZERO ADJ)
8 = Output connector
9 = Power plug

Clamp

This clamps around the conductor to be measured.

ManualsPlus.com

Slider

This slider opens the clamp. Always use it to open and close the clamp.

Lever

This lock mechanism keeps the clamp closed.

Sensor head

The sensor head clamps on the conductor being measured, and carries out the actual current measurement. It is a precision assembly including a molded component, a ferrite core, and a Hall effect element. It may be damaged if subjected to sudden changes in ambient temperature, or mechanical strain or shock, and therefore great care should be exercised in handling it.

Barrier

This structure reduces the likelihood of touching the conductor while testing, and indicates the limit of safe physical contact. Avoid touching the clamp in front of the barrier when clamping or measuring.

⚠ DANGER

Shock hazard

To avoid electric shock, do not touch the portion beyond the protective barrier during use.

Demagnetizing switch (DEMAG)

This demagnetizes the core if it has been magnetized by switching the power on and off, or by an excessive input. Always carry out demagnetizing before measurement.

The demagnetizing process takes about 3 seconds. During demagnetizing, a demagnetizing waveform is present at the output.

Zero adjustment dial (ZERO ADJ)

Use the zero adjustment dial to correct for the effect of a voltage offset or temperature drift.

When beginning measurement, after demagnetizing always carry out a zero adjustment.

ManualsPlus.com

Output connector

Connect to the BNC input connector of the waveform measuring instrument.

The current waveform of the measured conductor is output at a constant rate (0.01 V/A).

Power plug

Connect the plug to the R&S RT-ZA13 probe power supply receptacle to supply power to the sensor.

ManualsPlus.com

3 Putting into Operation

3.1 Preparing the Measurement

NOTICE

Voltage check

When using a different power supply than the R&S RT-ZA13 probe power supply, before turning on the power, make sure that the voltage of the used power supply matches the supply voltage indicated in the data sheet "R&S RT-Zxx Oscilloscope Probes".

- The output of this device is terminated internally. Use a high impedance input of the measuring instrument. With an input impedance of 50 Ω, accurate measurement is not possible.
- If using BNC-banana plug adapters or similar to connect to input terminals other than BNC connectors, make sure the polarity is correct.
- Turn the collar until it clicks, and check that it is locked securely.

1. Have the R&S RT-ZA13 probe power supply, and an oscilloscope or waveform measuring instrument ready.
2. Turn the power switch off and connect the power cord.
3. Connect the power plug of the R&S RT-ZC10 to the power receptacle of the R&S RT-ZA13 probe power supply.

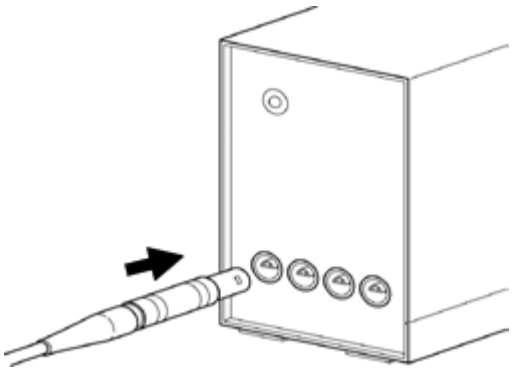

ManualsPlus.com

4. Check that the conductor being measured is not clamped when supplying power to the R&S RT-ZC10. When power is turned on, a demagnetizing waveform is initially applied to the output. This is intentional in the design, and not a fault.
5. Turn the R&S RT-ZA13 probe power supply power switch on, and check that the front panel power indicator lights.
6. Connect to the BNC input connector of the waveform measuring instrument. The current waveform of the measured conductor is output at a constant rate (0.01 V/A).
   For connection to an R&S oscilloscope, refer to chapter 3.2, "Connecting the Probe to R&S Oscilloscopes", on page 16.
7. When disconnecting the output connector, be sure to release the lock before pulling off the connector. Forcibly pulling the connector without releasing the lock, or pulling on the cable can damage the terminator.

3.2 Connecting the Probe to R&S Oscilloscopes

The connection procedure is described for channel 1. If the current probe is connected to a different channel, adapt the configuration appropriately.

- Connecting to R&S RTO.....16
- Connecting to R&S RTM.....18

3.2.1 Connecting to R&S RTO

1. Connect the output connector of the R&S RT-ZC10 to one of the BNC input connectors of the oscilloscope, e.g. to CH1 input. Turn the collar until it clicks, and check that it is locked securely.

ManualsPlus.com

Fig. 3-1: Front panel of R&S RTO1024

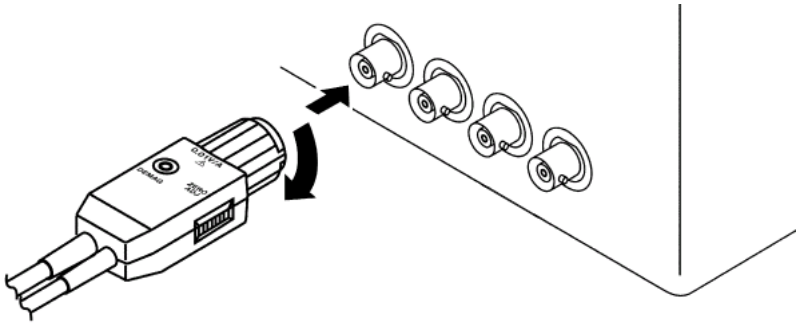

Fig. 3-2: Oscilloscope inputs

2. On the "Vertical" menu, select "Probe Setup".

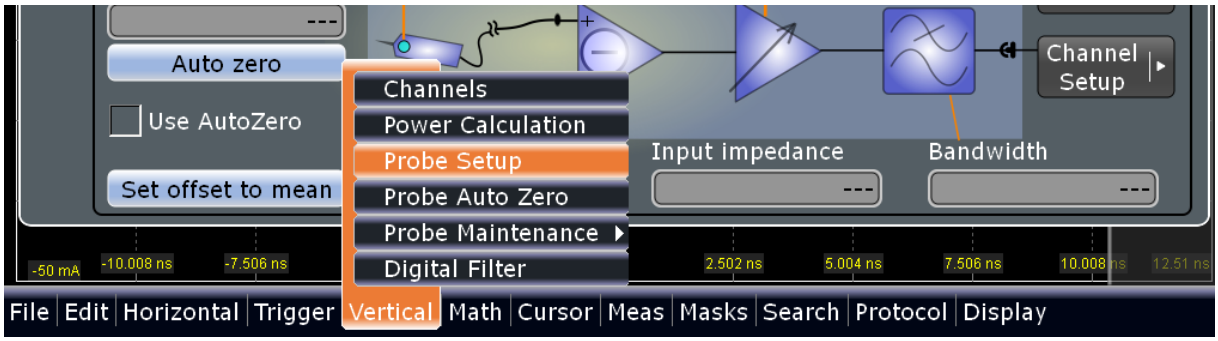

Fig. 3-3: Access to "Probe Setup"

3. Under "Probe detection", select the "Manual" tab.
   Select the "Predefined probe": RT-ZC10.

ManualsPlus.com

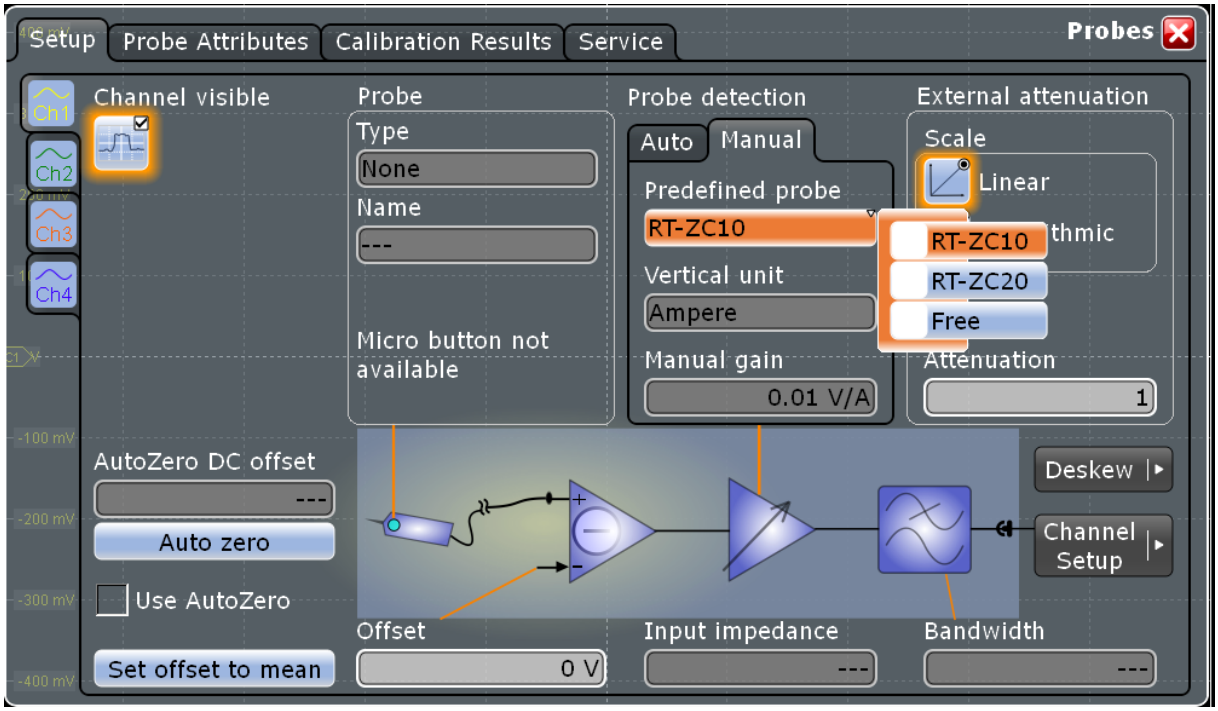

Fig. 3-4: "Predefined probe" selection for R&S RT-ZC10

3.2.2 Connecting to R&S RTM

1. Connect the output connector of the R&S RT-ZC10 to one of the BNC input connectors of the oscilloscope, e.g. to CH1 input. Turn the collar until it clicks, and check that it is locked securely.

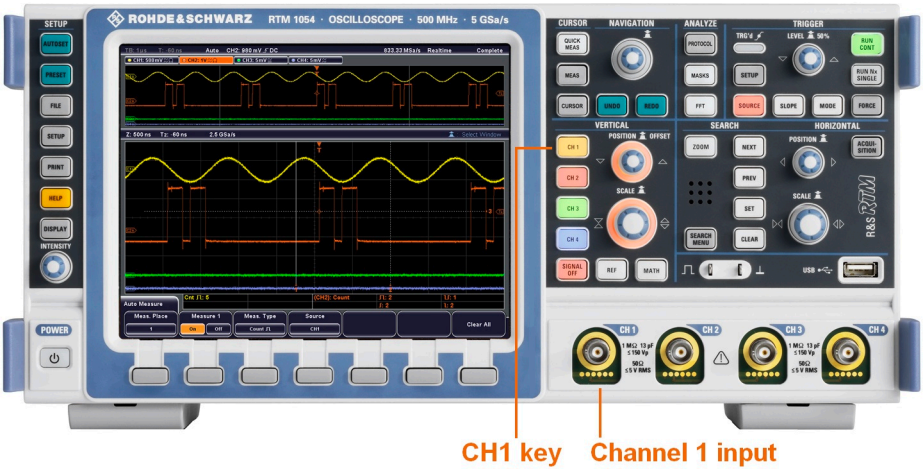

Fig. 3-5: Front panel of RTM

ManualsPlus.com

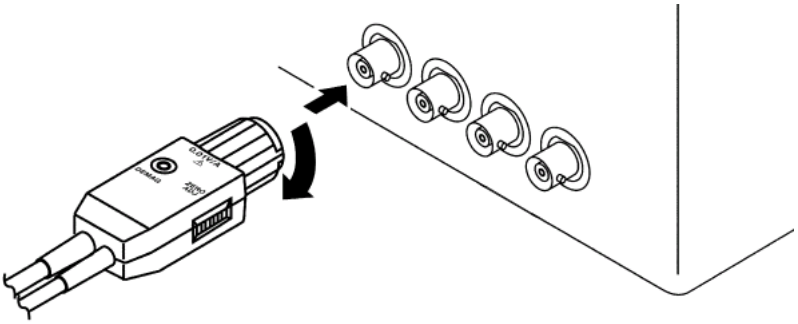

Fig. 3-6: Oscilloscope inputs

2. In the VERTICAL section on the front panel, press the CH1 key.
3. On the first page of the "Channels" menu, set:
   - Coupling: "DC"
   - Termination: "1 MΩ"

   Press "More".

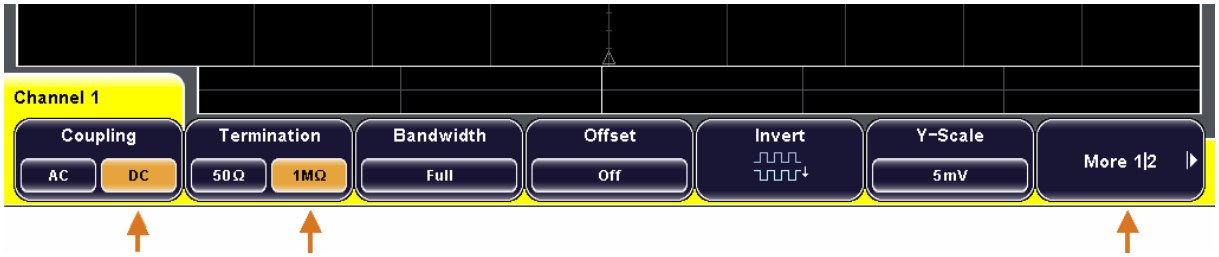

Fig. 3-7: RTM Channel1 menu 1st page

4. Press "Probe" on the second page of the "Channels" menu.

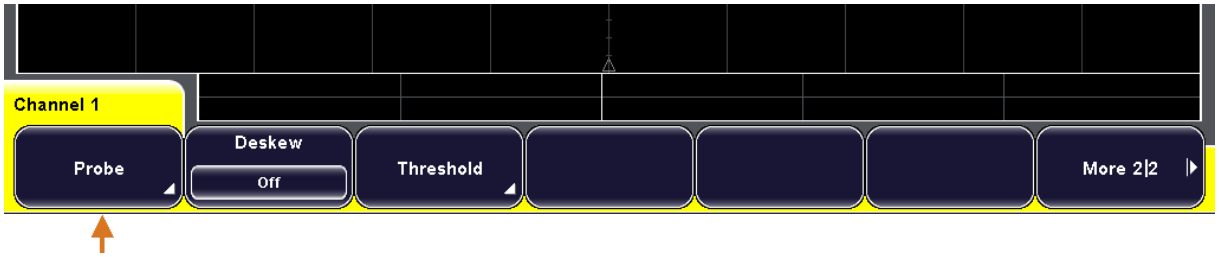

Fig. 3-8: RTM Channel1 menu 2nd page

5. In the "Probe" menu, set:
   - Unit: "Ampere"
   - Gain: 10 mV/A

ManualsPlus.com

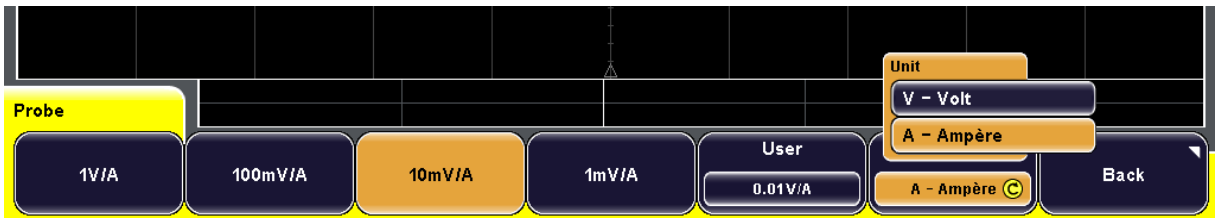

Fig. 3-9: RTM Channel1 Probe Menu for RT-ZC10

3.3 Demagnetizing and Zero Adjustment

NOTICE

Risk of circuit damage

- Do not demagnetize while the R&S RT-ZC10 is clamping a conductor to be measured. Demagnetizing causes current to flow into the conductor, which may damage parts in the circuit to be measured.

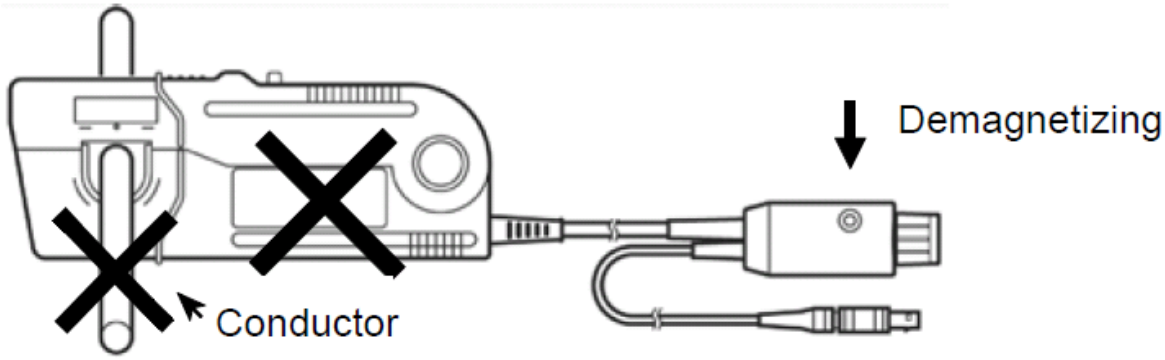

- Check that the conductor being measured is not clamped when supplying power to the R&S RT-ZC10. When power is turned on, a demagnetizing waveform is initially applied to the output. This is intentional in the design, and not a fault.

1. With the waveform measuring instrument input at ground, adjust the trace to the zero position.
2. Connect the R&S RT-ZC10 current probe and configure the oscilloscope as described in chapter 3.1 on page 15 and chapter 3.2 on page 16.
3. Make sure that there is no conductor in the sensor aperture.

ManualsPlus.com

4. Close the clamp until it snaps in.
5. Press the slider on the sensor head until the UNLOCK indication disappears, and hold it until LOCK appears. Check that the opening lever is firmly locked and the clamp is securely closed.
6. Press the demagnetizing switch (DEMAG) on the terminator.
7. Turn the zero adjustment dial on the terminator to adjust the trace to the zero position.

NOTICE

Risk of instrument damage

Make sure to open the clamp of the probe always with the slider.

3.4 Connecting the Probe to the DUT

1. Check that the system is safe, and that the preparations described in the preceding sections have been carried out.
2. Pull the sensor slider, so that the clamp opens.
3. Align the sensor so that the current direction indication corresponds to the direction of current flow through the conductor to be measured. The conductor should be in the center of the clamp aperture because the measurement may be affected by the position within the clamp aperture of the conductor being measured.

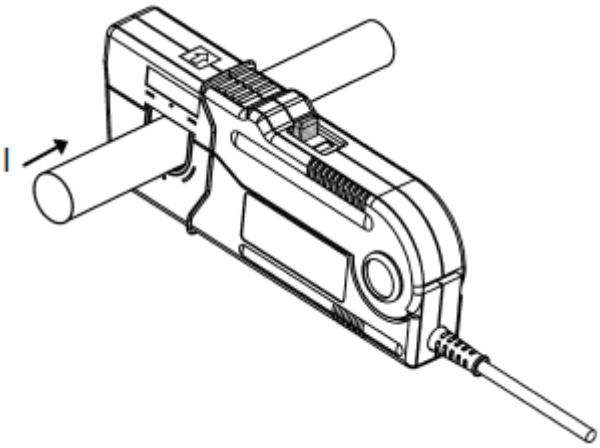

4. Close the clamp until it snaps in.

ManualsPlus.com

5. Press the slider on the sensor head until the UNLOCK indication disappears, and hold it until LOCK appears. Check that the opening lever is firmly locked and the clamp is securely closed.
   Correct measurements cannot be performed unless the clamp is securely closed and the slider is pressed until LOCK is displayed.

The current consumption of clamp-on probes depends on the current to be measured. Confirm that the total current consumption of the probes does not exceed the rated output current of the R&S RT-ZA13 probe power supply.

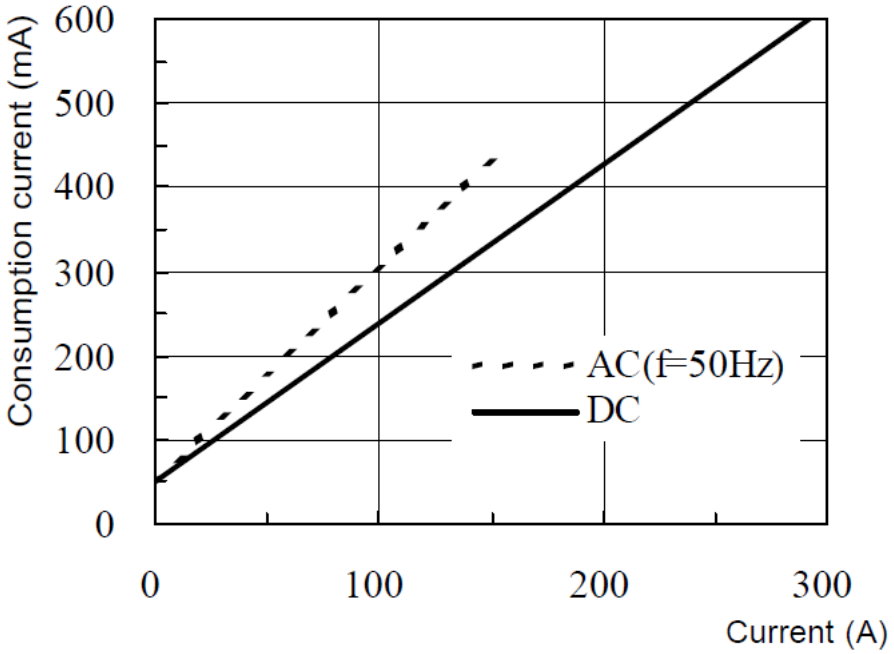

Fig. 3-10: Current consumption* vs. current to be measured (typical)

*The sum total of a positive and negative current consumption

ManualsPlus.com

NOTICE

Risk of instrument damage due to continuous input current

- The maximum continuous input range is based on heat that is internally generated during measurement. Always keep the input current below this level. Exceeding the rated level may result in damage to the probe.
- The maximum continuous input range varies according to the frequency of the current being measured. Refer to the data sheet "R&S RT-Zxx Oscilloscope Probes, Specifications"
- If the input current exceeds a certain level, generated heat activates a built-in safety function that blocks normal output. If this happens, remove the input immediately (remove the sensor from the conductor being measured, or reduce the input current to zero). Wait until the sensor has had sufficient time to cool before resuming operation.
- Even if the input current does not exceed the rated continuous maximum current, continuous input for an extended period of time may result in activation of the safety circuit to prevent damage resulting from heating of the sensor.
- At high ambient temperatures, the built-in safety circuit may activate at current input levels below the rated continuous maximum current.
- Continuous input of current exceeding the rated maximum or repeated activation of the safety function may result in damage to the device.
- Do not place any unclamped conductor with an electric current of a frequency of 10 kHz or more near the sensor head. Current flowing in the conductor nearby may heat up the sensor head and cause its temperature to rise, leading to damage to the sensor. For example, when one side of a go-and-return conductor is clamped and the other side is also placed near the sensor head as shown in the diagram, even if the electric current is lower than the consecutive maximum current, electric currents in both sides will heat up the sensor and raise the temperature, thereby causing damage to the sensor.

ManualsPlus.com

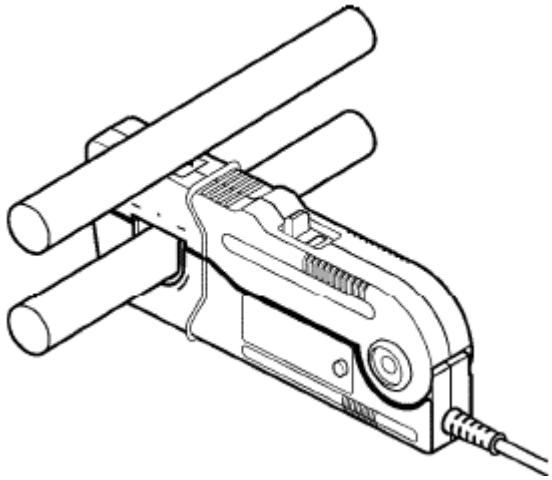

- Immediately after powering on, this device may be subject to an appreciable offset drift due to the effect of self-heating. To counteract this, allow the device to warm up for about 30 minutes before carrying out measurements.
- When performing continuous measurements, it is necessary to be aware that the offset voltage drifts, depending on factors such as the ambient temperature.
- Under certain circumstances, oscillation may occur while the power supply is on. This does not indicate a malfunction. Oscillation can be stopped and operation restored to normal by opening and closing the clamp.
- Acoustic resonance may occur depending on the level and frequency of the measured current. This does not normally affect measurements unless a foreign substance such as dust is present on the contact surfaces of the sensor head.

ManualsPlus.com

At high frequencies, common mode noise may affect measurements taken on the high voltage side of circuits. If this occurs, reduce the frequency range of the waveform measuring instrument, or clamp onto the low-voltage side of the circuit, as appropriate.

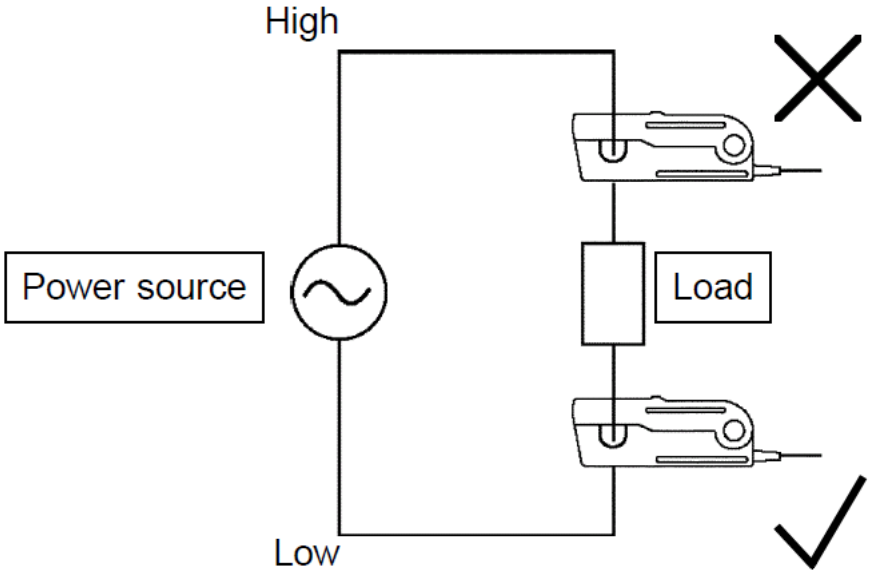

ManualsPlus.com

4 Maintenance and Service

4.1 Service Strategy

The R&S RT-ZC10 current probe is a high-precision, high-performance instrument that extends the limits of today's technological possibilities. Like all Rohde & Schwarz instruments, the R&S RT-ZC10 current probe is of high quality and requires only minimum service and repair. However, if the probe needs to be serviced, contact your Rohde & Schwarz service center. Return a defective probe to the Rohde & Schwarz service center for diagnosis and exchange.

You can return the R&S RT-ZC10 current probe for calibration. The service personnel will then perform the required tests and readjust the probe, if necessary.

4.2 Returning the Probe for Servicing

Use the original packaging to return the R&S RT-ZC10 current probe to your Rohde & Schwarz service center.

If you cannot use the original packaging, consider the following:

1. Use a sufficiently sized box.
2. Protect the probe from damage and moisture (e.g. with bubble wrap).
3. Use some kind of protective material (e.g. crumpled newspaper) to stabilize the probe inside the box.
4. Seal the box with tape.
5. Address the package to your nearest Rohde & Schwarz service center.

ManualsPlus.com

4.3 Cleaning

To clean the exterior of the probe, use a soft cloth moistened with either distilled water or isopropyl alcohol. Before using the probe again, make sure to dry it completely.

NOTICE

Instrument damage caused by cleaning agents

Cleaning agents contain substances that may damage the instrument; for example, solvent may damage the labeling or plastic parts.

Never use cleaning agents such as solvents (thinners, acetone, etc.), acids, bases or other substances

4.4 Calibration Interval

The recommended calibration interval is two years. For servicing, send the probe to your nearest Rohde & Schwarz service center (see chapter 4.2, "Returning the Probe for Servicing", on page 26).

ManualsPlus.com

5 R&S RT-ZA13 Probe Power Supply

This unit is a special-purpose power supply for the R&S RT-10 and R&S RT-20 current probes.

You can connect up to four current probes to the power supply.

Front view

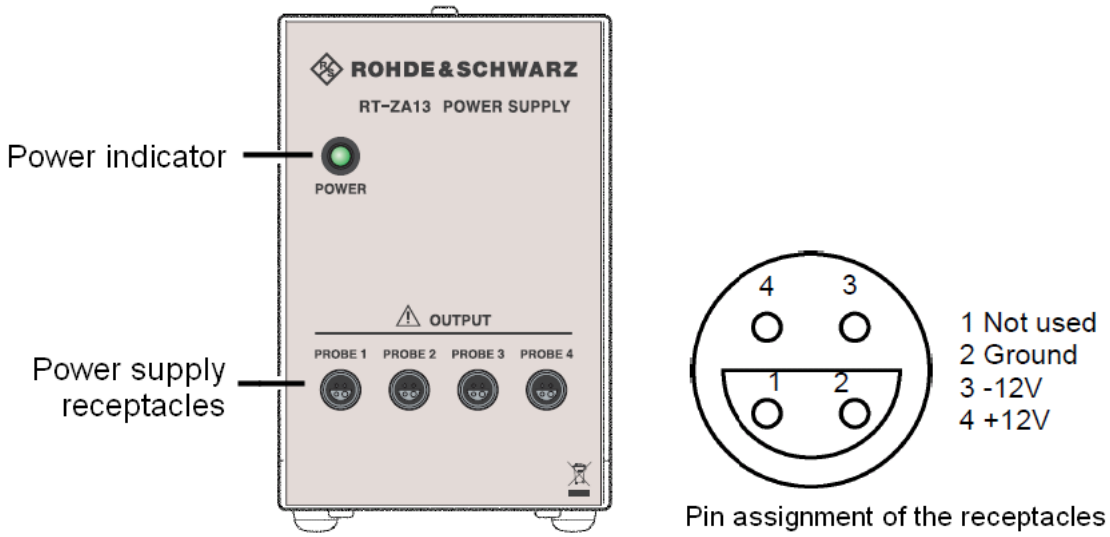
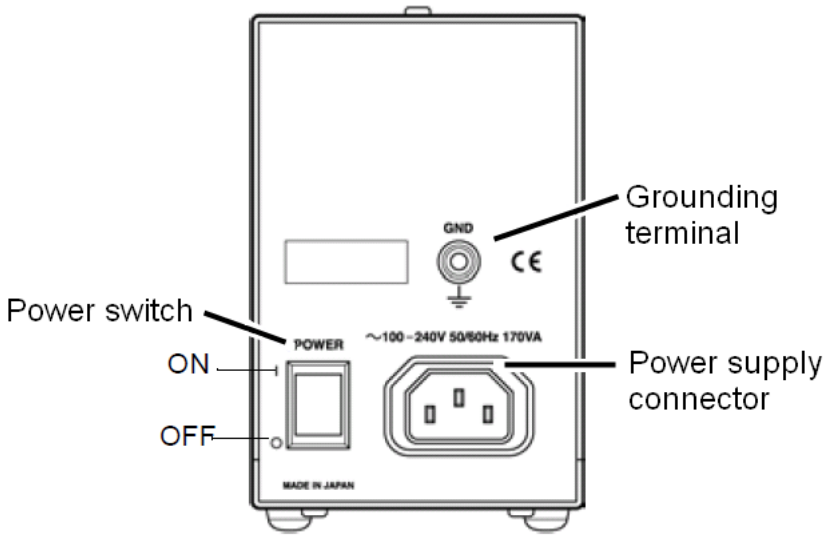
Rear view