ManualsPlus.com

ROHDE&SCHWARZ

Measuring Instruments
and Systems Division

Manual

MILLIVOLTMETER URV5

394.8010.02

LA TRADUCTION FRANÇAISE SUIT LE TEXTE ANGLAIS

Printed in the Federal
Republic of Germany

ManualsPlus.com

ManualsPlus.com

Page

1 Technical Information

2 Preparation for Use and Operating Instructions 2.1

2.1 Legend to Figs. 2-1 and 2-2 ..... 2.1
2.1.1 Front View (Fig. 2-1) 2.1
2.1.2 Rear View (Fig. 2-2) 2.5

2.2 Preparation for Use 2.6
2.2.1 Setting up the URV5 ..... 2.6
2.2.2 Rack-mounting 2.6
2.2.3 Power Supply 2.6
2.2.4 Switching-on and Self-test 2.7

2.3 Operating Instructions 2.8
2.3.1 Connecting the URV5 to the Test Item 2.8
2.3.2 Probes 2.9
2.3.2.1 DC Probe 2.9
2.3.2.2 AC Probes 2.11
2.3.2.2.1 General Remarks on RF Measurements and RF Probes . 2.11
2.3.2.2.2 RF Probe 2.13
2.3.2.2.3 RF Insertion Units 2.16
2.3.2.2.4 Power Sensor 2.17
2.3.3 Selection of Measurement Channel 2.18
2.3.4 ZERO Key (Zeroing) 2.19
2.3.5 Readout of Measured Value (COMPUTE keys) 2.20
2.3.5.1 Readout in V, W, dBm, dBV (ABSOLUTE) 2.21
2.3.5.2 Relative Readout
(Δ, Δ%, ΔdB, X/REF, with ΔINT, ΔEXT) 2.21
2.3.5.3 ATT CORR Key 2.23
2.3.5.4 FRQ CORR Key 2.24
2.3.5.5 COMP OFF Key 2.25
2.3.5.6 Display of Stored Reference, Correction and
Impedance Values (RCL INP Key) 2.25
2.3.6 PEAK (PEP) Key 2.26
2.3.7 Switching off Autoranging and Selection of a
Measurement Range 2.31
2.3.8 Measurement Speed (FILTER Key) 2.33
2.3.9 Secondary Function Level 2.34
2.3.9.1 Input of Reference Value, Correction Value
or Impedance 2.35
2.3.9.2 Use of Measured Values as Reference Values 2.36
2.3.9.3 Calling up of Special Function Level 2.38
2.3.10 Special Function Level 2.38
2.3.11 Basic Setting 2.42
2.3.12 Error Messages 2.43

ManualsPlus.com

2.4 IEC-bus Control of URV5 ..... 2.45
2.4.1 Interface Functions 2.46
2.4.2 Setting of Device Address/Talk-Only Mode 2.47
2.4.2.1 Inserting/Removing a Probe during IEC-bus Operation (Remote Mode) 2.49
2.4.3 Device-specific IEC-bus Commands 2.50
2.4.3.1 Tables for IEC-bus Programming of URV5 in Measurement Mode 2.53
2.4.3.2 Additional Explanations and Notes on IEC-bus Commands for URV5 ..... 2.59
2.4.4 Data Output 2.67
2.4.4.1 Text String Output 2.67
2.4.4.2 Data Output in Measurement Mode 2.67
2.4.5 Error during IEC-bus Operation 2.70
2.4.6 Group of Addressed and Universal Commands 2.71
2.4.6.1 Table of Universal Commands 2.71
2.4.6.2 Remote/Local 2.72
2.4.6.3 Device Clear 2.72
2.4.6.4 Device Trigger 2.73
2.4.6.5 Service Request 2.73
2.4.6.6 Parallel Poll (PPOLL) 2.75
2.4.7 Output of Measured Value in Talk-Only Mode 2.76

2.5 Analog Output 2.77

2.6 IEC-bus Commands in Calibration Mode 2.78

ManualsPlus.com

Table of Contents

		Page
3	Maintenance	3.1
3.1	Basic Unit URV5	3.2
3.1.1	Required Measuring Equipment and Accessories	3.2
3.1.2	Checking the Rated Specifications	3.3
3.1.2.1	Self-Testing	3.3
3.1.2.2	Functional Check of Displays and Keyboard	3.3
3.1.2.3	Checking the IEC-Bus Interface	3.5
3.1.2.4	Checking the Probe Interface	3.8
3.1.2.5	Checking the Accuracy of DC Measurements	3.8
3.1.2.6	Checking the Accuracy of AC Measurements	3.9
3.1.2.7	Checking the PEAK (PEP) Function	3.10
3.1.3	Performance Test Report	3.11
3.2	RF Probe URV5-Z7	3.13
3.2.1	Required Measuring Equipment and Accessories	3.13
3.2.2	Checking the Rated Specification	3.13
3.2.2.1	Checking the Linearity	3.13
3.2.2.2	Checking the Input Capacitance	3.14
3.2.3	Performance Test Report	3.15
3.3	10-V Insertion Unit 50 Ω URV5-Z2	3.16
3.3.1	Required Measuring Equipment and Accessories	3.16
3.3.2	Checking the Rated Specifications	3.16
3.3.2.1	Checking the Linearity	3.16
3.3.2.2	Checking the Reflection Coefficient	3.17
3.3.3	Performance Test Report	3.18
3.4	100-V Insertion Unit 50 Ω URV5-Z4	3.19
3.4.1	Required Measuring Equipment and Accessories	3.19
3.4.2	Checking the Rated Specifications	3.20
3.4.2.1	Checking the Linearity	3.20
3.4.2.2	Checking the Reflection Coefficient	3.21
3.4.3	Performance Test Report	3.22
3.5	100-V Insertion Unit 75 Ω URV5-Z4	3.23
3.5.1	Required Measuring Equipment and Accessories	3.23
3.5.2	Checking the Rated Specifications	3.24
3.5.2.1	Checking the Linearity	3.24
3.5.2.2	Checking the Reflection Coefficient	3.25
3.5.3	Performance Test Report	3.26
3.6	DC Probe URV5-Z1	3.27
3.6.1	Required Measuring Equipment and Accessories	3.27
3.6.2	Checking the Rated Specifications	3.27
3.6.2.1	Checking the Measurement Accuracy	3.27
3.6.3	Performance Test Report	3.28
3.7	Checking the Frequency Response of RF Probes	3.29
3.8	Test Setup for Measurement of Reflection Coefficient	3.30

ManualsPlus.com

Page

4 Service Instructions for Total Unit 4.1

4.1 Circuit Description 4.1

4.1.1 Analog Board 4.1
4.1.1.1 AC Probe Amplifiers A and B 4.2
4.1.1.2 DC Probe Amplifier A/B 4.3
4.1.1.3 Peak-value Meter 4.4
4.1.1.4 A/D Converter 4.4
4.1.1.5 Analog Switch Decoder (30) 4.5

4.1.2 Computer (33, ..., 44, 48, 58) 4.5

4.1.3 Power Supply (35, 38, 48, 58) 4.6

4.1.4 DC Output (Option URV5-B2) 4.6

4.1.5 Measuring Heads 4.7
4.1.5.1 RF Probe URV5-Z7 ..... 4.8
4.1.5.1.1 20-/40-dB Dividers 4.8
4.1.5.1.2 50-/75-Ω Adapters 4.8
4.1.5.2 10-V Insertion Unit URV5-Z2 ..... 4.8
4.1.5.3 100-V Insertion Units URV5-Z4 ..... 4.8
4.1.5.4 DC Probe URV5-Z1 ..... 4.8

4.2 Mechanical Construction 4.9

List of mechanical parts in Appendix
Figures pertaining to list of mechanical parts in Appendix

ManualsPlus.com

Supplement to Manual
Millivoltmeter URV5
394.8010.02

Due to the high sensitivity of the URV5/NRV Power Heads the influence of considerable electromagnetic fields may cause reading errors in the lower dynamic measurement range. One reason is the shielding attenuation of the cable and may therefore not be improved to an unlimited value. For high sensitivity measurements exposed to interfering electromagnetic fields of some Volts/m the application of additional shielding may be necessary.

ManualsPlus.com

ManualsPlus.com

ROHDE&SCHWARZ

EC Certificate of Conformity

CE

Certificate No.: 9502165

This is to certify that:

Equipment type	Order No.	Designation
URV5	0394.8010.02	RF DC Millivoltmeter
URV5-B2	0395.0112.02	DC Output

complies with the provisions of the Directive of the Council of the European Union on the approximation of the laws of the Member States

- relating to electrical equipment for use within defined voltage limits (73/23/EEC revised by 93/68/EEC)
- relating to electromagnetic compatibility (89/336/EEC revised by 91/263/EEC, 92/31/EEC, 93/68/EEC)

Conformity is proven by compliance with the following standards:

EN61010-1 : 1991
EN50081-1 : 1992
EN50082-1 : 1992

Affixing the EC conformity mark as from 1995

ROHDE & SCHWARZ GmbH & Co. KG
Mühldorfstr. 15, D-81671 München

Munich, 1997-08-26

Central Quality Management FS-QZ / Becker

ManualsPlus.com

ManualsPlus.com

ROHDE&SCHWARZ

EC Certificate of Conformity

CE

Certificate No.: 9502166

This is to certify that:

Equipment type	Order No.	Designation
URV5-Z1	0395.0512.02	DC-Probe
URV5-Z2	0395.1019.02/.05 .55/.56	10-V Insertion Unit
URV5-Z4	0395.1619.02/.05 .55/.56 .75/.76	100-V Insertion Unit
URV5-Z7	0395.2615.02/.03	RF Probe

complies with the provisions of the Directive of the Council of the European Union on the approximation of the laws of the Member States

- relating to electromagnetic compatibility
  (89/336/EEC revised by 91/263/EEC, 92/31/EEC, 93/68/EEC)

Conformity is proven by compliance with the following standards:

EN50081-1 : 1992
EN50082-1 : 1992

Affixing the EC conformity mark as from 1995

ROHDE & SCHWARZ GmbH & Co. KG
Mühldorfstr. 15, D-81671 München

Munich, 1997-08-26

Central Quality Management FS-QZ / Becker

ManualsPlus.com

ManualsPlus.com

2 Preparation for Use and Operating Instructions

(See Figs. 2-1 and 2-2 in the Appendix)

The values given in this section are not guaranteed; only the specifications contained in the data sheet or technical information are binding. The values cited in the manual are intended as guidelines for the user and can under circumstances differ from those of the data sheet.

2.1 Legend to Figs. 2-1 and 2-2

The underlined numbers of the control elements and indicators refer to the corresponding numbers in the Figs. 2-1 (Front view) and 2-2 (Rear view) in the Appendix.

2.1.1 Front View (Fig. 2-1)

Ref.	Marking	Function
1	REF FRQ/Hz ATT/dB Z/Ω	LED display for identification of the value indicated in 2 as reference value, frequency or attenuation correction value, and reference impedance in case of recall or entry.
2		4 1/2-digit readout of measured value with 1 1/2-digit exponent.
3	V Δ W Δ% dBm ΔdB dBV X/REF	LED display for indication of the unit.
4		Circular LED display for tendency indication.
5	REM SRQ LLO READY	LED display for indication of IEC-bus operation: REM: remote mode SRQ: service request LLO: local lockout state (switchover to manual operation not possible) READY: valid measured value in output buffer
6	LOCAL/TALK STO	Key for interrupting the remote mode or key for data output in talk-only mode. Secondary function: Storage of reference values or of IEC-bus address. Special function: none

ManualsPlus.com

Ref.	Marking	Function
7	FILTER SPEC	Key with LED for selecting the measurement speed F2 to F4. LED lights: SLOW (FØ to F2) LED off: FAST (F3 to F5) Secondary function: Calling up of special function level. Special function: none
8	INPUT/SHIFT	Key with LED for selecting secondary function level of key. Secondary function: } return to measurement mode Special function: } return to measurement mode
9	UP ↑ 0	Key for selecting next higher measurement range. Secondary function: zero key Special function: LED test
	DOWN ↓ •/to	Key for selecting the next lower measurement range. Secondary function: Entry of decimal point for data input or entry of talk-only mode with special function 1 (entry of IEC-bus address). Special function: none
	AUTO +/-	Key with LED for switching on and off autoranging. LED lights: autoranging is operative Secondary function: Change of polarity sign for data input. Special function: none
10	PEAK (PEP) CLEAR	Key for switching on/off weighted peak-responding measurement. (not with DC measurement) Secondary function: Cancel key for data input Special function: No error message: basic initialization of device. With error message: erasure of error message, no reinitialization.

ManualsPlus.com

Ref.	Marking	Function
11	SEL DIM DIM SEL REL EXP	Stepping keys for selection of unit (DIM: V, W, dBm, dBV) or conversion modes in case of relative values (REL: Δ, Δ%, ΔdB, X/REF). In case of relative values, only the basic units V and W can be selected. Secondary function: DIM: stepping key for selection of the reference value unit for data input. EXP: cancel/switchover key for subsequent entry of the tens exponent. Special function: none
12	RCL INP INP	Stepping key for output of stored input values (REF, FRQ, ATT, Z, -off-) Secondary function: stepping key for selection of desired input parameter (REF, FRQ, ATT, Z) Special function: none
13	ABSOLUTE 9 ΔINT 6 ΔEXT 3	Keyboard for selection of readout mode ABSOLUTE: readout in V, W, dBm, dBV ΔINT: relative readout referred to an internally stored reference value ΔEXT: relative readout referred to the respective second channel (A relative to B or B relative to A) Secondary function: numerical keys 9, 6, 3 Special functions: 3: measurement speed FØ...F5 6: check sum indication of program memory

ManualsPlus.com

Ref.	Marking	Function
14	FRQ CORR 5 ATT CORR 2	Keys for switching on/off a computed frequency correction value for an entered frequency or an attenuation correction value for an entered attenuation value. (FRQ CORR not possible with DC-measurement). Secondary function: numerical keys 2, 5 Special functions: 2: storage of currently valid entered values as switch-on initialization values. 5: indication of last error message
15	COMP OFF 8	Key for switching of all units called up via the COMPUTER keys as well as correction values → indication in V only Secondary function: numerical key 8 Special function: none
16	ZERO 1	Key for automatic zeroing if low voltages are measured (not for DC measurement). Secondary function: numerical key 1 Special function: Calling up of routines for entry of IEC-bus address.
17	A 7 B 4	Keys for selection of current main measurement channel A or B (relevant for data input, operation and mutual channel reference) Secondary function: numerical keys 4, 7 Special function: 4: calling up of routines for instrument calibration (can be inhibited via internal connector)
18		Openings for insertion of probes.

ManualsPlus.com

2.1.2 Rear View (Fig. 2-2)

Ref.	Marking	Function
19	ON POWER OFF	Power switch
20	⊥ 47 - 63 Hz	AC supply connector
21	100 V / 120 V / 220 V / 240 V IEC 127-T500H / 250 V	AC voltage selector and fuse holder with specification of fuses.
22	IEC 625	Connector for IEC-bus interface
23	DC	Coaxial socket for DC voltage output (option URV5-B2).

ManualsPlus.com

2.2.1 Setting up the URV5

The URV5 may be operated in any position. To enhance operating convenience and facilitate reading of the indications, the URV5 should be set up in a slightly tilted position. For this purpose the carrying handle must be brought into the desired position by pressing the two swivel joints and then locked into position.

Care should be taken not to cover up the ventilating louvres on the top and bottom side of the instrument. The URV5 may be used at ambient temperatures between 0°C and +50°C max. Condensation should not be allowed to form on the unit. If this cannot be avoided, however, wait until the unit is dry before switching on.

2.2.2 Rack-mounting

The URV5 can be mounted into 19" racks with the aid of an Adapter ZZA-22 (recommended extra). To do so, the two cover panels must be replaced by special covers, the carrying handle and the two side strips be removed and a filter insert be screwed to the left- or right-hand side.

2.2.3 Power Supply

The URV5 is designed for operation from AC supply voltages of 100 V, 120 V, 220 V und 240 V ±10% and frequencies of 47 to 63 Hz. It is factory-adjusted for 220 V, but can easily be adapted to another voltage. For this purpose, remove the cap of the fuse holder using a screwdriver, replace the fuse, if required, and reinsert the cap so that the triangular marker points to the desired voltage. For AC supply voltages of 100 V, 120 V, 220 V and 240 V a fuse T500H / 250 V to IEC 127 must be used.

The URV5 is connected to the AC supply via the power connector and cable supplied with the unit. Since the unit complies with the regulations of VDE 0411, safety class I, the following must be observed:

The URV5 must be connected to a socket with safety ground contact!

ManualsPlus.com

2.2.4 Switching-on and Self-test

The URV5 is switched on by means of the power switch on the rear panel. The following appears on the display:

HAllo

Then the device address for the IEC-bus is indicated, e.g.:

IEC 9

for address 9

or if talk-only mode has been selected

IECto

(see section 2.4.2: Setting of Device Address / Talk-Only Mode).

When these routines are executed, the RAM, the data stored in the EPROM (calibration values, IEC-bus address, reference values, etc.), the analog hardware (A/D converter, offset voltage for amplifiers, as well as various test settings) are checked and the URV5 is then initialized with these data.

In case of a fault, an error message will be output (see section 2.3.12).

The instrument then automatically returns to a basic setting (see section 2.3.11: Basic Setting).

If one probe (or both) is inserted, the probe data are automatically read in and checked, the URV5 being then ready for measurements. If there is no probe at all, dashes (-----) will appear on display 5.

If the RAM is defective, "fault" will be indicated on the display.

ManualsPlus.com

2.3.1 Connecting the URV5 to the Test Item

For measurements with the URV5, at least one probe is required.

The probes consist of the measuring head proper (probe or terminated unit/insertion unit), connecting cable and plug-in adapter, which is inserted and locked in position at one of the openings 18 provided in the basic unit.

In this plug-in adapter the main probe data, such as probe identification (e.g. DC or AC probe), calibration data and frequency correction curves are stored, read out after correct insertion of the probe and considered in the subsequent measurement according to the instrument setting.

The caption

displayed indicates the initialization of a probe.

The URV5 can be operated with one probe only, i.e. in the channel which contains the probe. Dual-channel measurements are of course only possible if two probes (which need **not** be identical) are inserted. Otherwise a corresponding message will be output and the instrument returns to the original measurement mode.

Note: The operation of the URV5 has been designed so that the user can use the two measurement channels like two measuring instruments operated via a keyboard.

In the following sections, operation of one channel only is therefore described, departures from this practice being separately mentioned.

ManualsPlus.com

2.3.2 Probes

The probes are inserted into the openings 18 (A or B) together with the plug-in adapters. Correct insertion of the probes is recognized by the URV5 both in manual and in remote control mode, but it is recommended to insert the probes in manual mode only. In remote mode, with correspondingly adjusted interface (Q1 to Q3), the URV5 only sends SRQ (114) to the controller in order to avoid any interruption of the current program.

(When removing the probe in the main measurement channel: SRQ (104) and abortion of measurement).

The probe data for evaluation in the instrument are read in **immediately in local mode,** whereas **in remote mode** they are read in only **after the command CØ has been sent** to the URV5 or after switching to local mode.

The type of probe (DC/AC probe, RF probe etc.) and further probe-specific data such as frequency response, calibration and attenuation factors (e.g. for 100-V insertion unit) are thus known to the instrument and will be considered for the operation and evaluation of the corresponding channel. After the data have been read in, the URV5 is immediately ready for measurements.

> **Note:** For complete technical data and specifications please refer to the URV5 data sheet.
>
> The values cited in the manual are intended as guidelines for the user and can under circumstances differ from those of the data sheet.

2.3.2.1 DC Probe

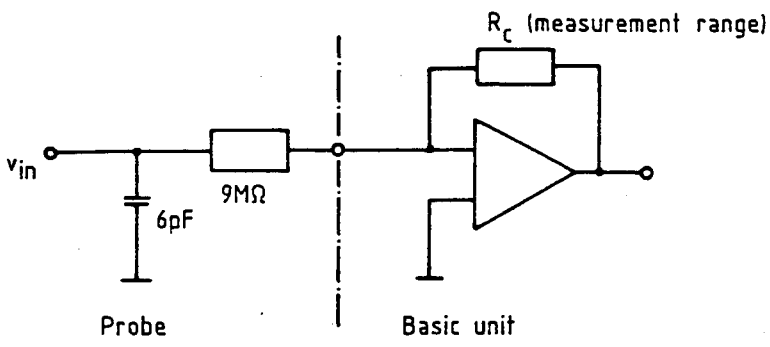

V_{in}: 0 to 400 V

R_{in}: 9 MΩ shunted by 6pF

Fig. 2-3 Equivalent circuit diagram of DC probe

ManualsPlus.com

The maximum voltage for the DC probe is 400 V. Care should be taken that the probe is always referred to chassis ground, i.e. **not floating. Reference potential is always the chassis ground.**

An essential advantage of this DC probe is the low capacitive load (6 pF). Thus DC measurements are also possible on RF circuits.

It should be noted that the precision resistor in the probe is temperature-dependent (9 MΩ, approx. 100 ppm/°C), i.e. the probe temperature (raised e.g. by holding the probe for some time) will affect the measuring accuracy and may cause a slight drift in indication.

For measuring speed see section 2.3.8.

The ZERO-/PEAK and FRQ CORR keys are disabled in case of DC measurement.

ManualsPlus.com

2.3.2.2 AC Probes

2.3.2.2.1 General Remarks on RF Measurements and RF Probes

1. Waveform weighting

The URV5 reads out the rms value of sinewave voltages of any magnitude as long as they are within the measurement range of the instrument. With other waveforms, however, the weighting is dependent on the magnitude of the voltage to be measured, since a diode detector has a square-law response only at low voltages up to about 30 mV and therefore measures the true rms value only up to this value independent of the waveform of the test voltage. This range can be expanded to 3 V by means of plug-on voltage dividers, so that the true rms value of an AC voltage can be measured in the range from 200 µV to 3 V.

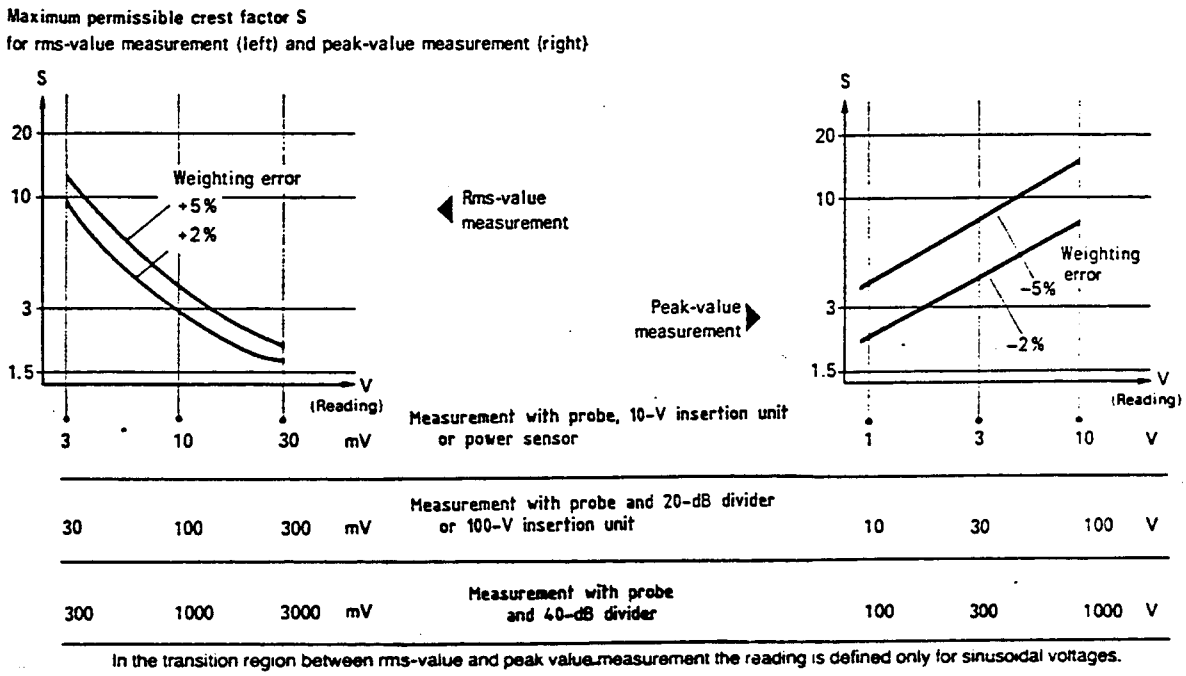

Fig. 2-4 Waveform weighting and maximum crest factor for RF measurements using URV5 probes

In the transition range from rms to peak-responding measurement the measured value is only defined for sinewave voltages.

In Fig. 2-4 the maximum permissible crest factor is shown as a function of the magnitude of the test voltage at which the error of the measured rms value relative to the true rms value does not exceed 2% or 5%.

ManualsPlus.com

With test voltages above 1 V (above 10 V using 20-dB divider or 100-V insertion unit, above 100 V using 40-dB divider), the diode detector acts a a peak-responding rectifier. Since a full-wave rectifier is incorporated in the probes, the peak-to-peak value is measured but the value $V_{pp}/2\sqrt{2}$ is indicated. For sinewave voltages this corresponds to readout of the rms value.

Fig. 2-4 shows the maximum permissible crest factor for a weighting error of the peak-responding rectifier of -2% and -5% as a function of the magnitude of the test voltage.

For peak-responding measurement see also section 2.3.6: PEAK (PEP) Measurement.

2. The lower cutoff frequency (3 dB) of the RF probes is temperature-dependent, the value specified for the individual probes being valid in the temperature range +18°C to +28°C. In addition, it can be assumed that as a rule of thumb this cut-off frequency is doubled for every 10 K temperature rise and halved for every 10 K temperature drop.

3. After large changes of the level, the URV5 exhibits a slight delay caused by residual charge effects. This longer settling time must also be taken into account.

4. **All probes of the URV5 are referred to safety ground.**

5. **Measurements at low voltages**
   (see also section 3: Maintenance)

   a) The URV5 features broadband RF measurements. If low voltages are to be measured, care must therefore be taken of (RF) interfering signals as may for instance occur with microprocessor-controlled AC calibrators or AF generators. The useful signal may partly be superimposed by a noise spectrum (a few MHz) from the microprocessor clock, which does not cause any interference in the AF range (→ 200 kHz), but invalidates the result of the broadband measurement with the URV5.

      Therefore it must be ensured that there is no such interference or that it is considered in the evaluation of the measurement result.

ManualsPlus.com

b) In the case of measurements on signal sources that are not referred to safety ground, interfering voltages may be caused by ground equalizing currents, which are added to the test voltage and thus also enter into the test result. This is particularly the case with poor plug-in and screw connections in the test line (Fig. 2-5).

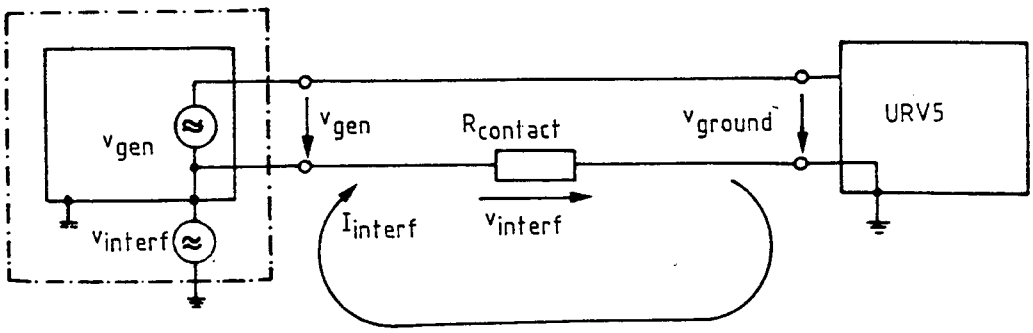

$V_{interf} = R_{contact} \cdot I_{interf}$

$V_{ground} = V_{gen} + V_{interf}$

Fig. 2-5 Interfering voltages caused by ground equalizing currents

2.3.2.2.2 RF Probe

In the frequency range up to about 200 MHz, the probe enables direct measurement on the circuit; care should be taken that the ground connection to the probe is short (e.g. ground sleeve with solder strip). The screw-on ground cable can only be used for measurements up to about 50 MHz, since due to the cable length the measuring error may unduly increase at higher frequencies.

The voltage measurement range with probe is 200 µV to 10 V. The maximum permissible AC voltage at the probe is V_{rms} = 15 V; any higher voltage will cause damage to the rectifier diodes. The voltage measurement range of the probe can be extended to 100 V or 1000 V by using the 20-dB or 40-dB divider recommended as an extra.

In measurements with probe and 40-dB divider, the maximum measurable voltage of V_{rms} = 1000 V must not be applied at frequencies above 100 MHz, since the divider would be damaged due to the dielectric loss of the divider capacitance. Between 100 MHz and 500 MHz the permissible voltage drops inversely with frequency from 1050 V to 210 V.

With the aid of the BNC adapter the probe may also be used for measurements on coaxial systems (frequency range 20 kHz to 500 MHz). Using the matching sleeve supplied with the equipment, the probe can also be inserted into the adapter with plugged-on divider.

ManualsPlus.com

When using the 40-dB divider (frequency range 1 to 500 MHz), the maximum measurable voltage is only limited by the permissible voltage (V_p = 500 V) and the power-handling capacity of the BNC connector cable. Table 2-1 shows the power-handling capacity of BNC cables and the voltages calculated from it as a function of frequency.

Table 2-1

f/MHz	1	10	100	200	500
P_{max}/W	1300	410	130	82	42
V_{rms}/V	225	143	81	64	45

For high-accuracy measurements on coaxial systems low-reflection insertion units are provided.

When using the 20/40-dB dividers, the division factor can be entered into the URV5 (ATT/dB) and upon switching on the ATT CORR function the readout is correctly referred to the input voltage (see section 2.3.5.3).

Up to frequencies of about 20 MHz the input impedance of the probe is equivalent to a capacitance of 2.5 pF shunted by an ohmic resistance whose value at room temperature is between 100 kΩ and 1 MΩ depending on the test voltage (guaranteed value up to 10 MHz > 80 kΩ at room temperature). At higher frequencies, the resistive component of the input impedance decreases as the square of the frequency due to the losses of the input capacity (Fig. 2-6).

Through the 20-dB divider the input capacitance is reduced to 1 pF, through the 40-dB divider to 0.5 pF. In the frequency range up to 20 MHz the resistive component of the input impedance is increased to a few MΩ through the 20-dB divider and to above 10 MΩ through the 40-dB divider. At higher frequencies the resistive component also decreases as the square of the frequency.

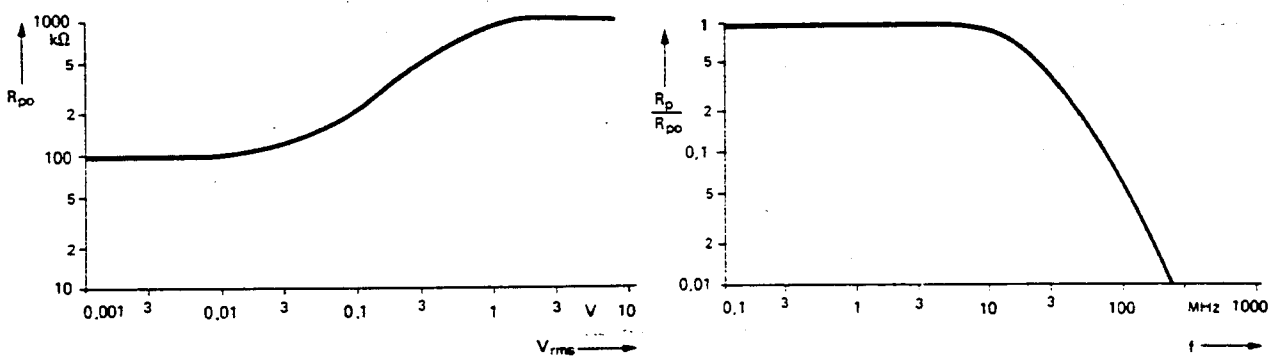

Input resistance R_{po} for f < 3 MHz as a typical function of the test voltage (sinewave).

Typical frequency function of the input resistance R_p relative to the input resistance R_{po} at low frequencies.

Fig. 2-6 Input impedance of RF probe

ManualsPlus.com

Table 2-2 Overview of characteristic data of RF probe as well as of available dividers and adapters

	RF-probe	with 20-dB divider	with 40-dB divider	BNC adapter	50-Ω adapter	75-Ω adapter
Frequency range	20 kHz to 1 GHz	1 MHz to 500 MHz	0,5 MHz to 500 MHz (100 MHz)	20 kHz to 500 MHz	20 kHz to 1 GHz	20 kHz to 500 MHz
Voltage range	200 µV to 10 V	2 mV to 100 V	20 mV to 210 V (1000 V)	200 µV to 10 V	200 µV to 10 V	200 µV to 10 V
Input impedance C_{in} shunted by R	Fig. 2-6	1 pF >1 MΩ	0.5 pF >10 MΩ		50 Ω	75 Ω

For frequency response errors and reflection coefficients (50-Ω, 75-Ω adapter) please refer to the data sheet.

For measurements on 50-Ω and 75-Ω systems, the corresponding terminating adapters must be used.

The measuring accuracy can be improved in particular towards the upper frequency limit by entering the test frequency and switching on the FRQ CORR function (see section 2.3.5.4).

The frequency response correction curve of the RF probe is picked up by the 50-Ω adapter and is therefore also specified for this adapter.

When using other adapters or dividers and switching on the FRQ CORR function, this correction is only valid to a limited extent.

ManualsPlus.com

2.3.2.2.3 RF Insertion Units

Three insertion units with a characteristic impedance of 50 Ω or 75 Ω are available for the URV5. They are suitable for voltage measurements up to 10 V or 100 V. The attenuation factor of the 100-V insertion units is automatically taken into account by the URV5 and therefore need not be entered.

The low reflection coefficients of the 100-V insertion units are worth mentioning, since they render the insertion units particularly suitable for precision measurements on coaxial 50-Ω and 75-Ω systems.

Table 2-3 Overview of characteristic data of insertion units

	10-V insertion unit (50 Ω)	100-V insertion unit (50 Ω)	100-V insertion unit (75 Ω)
Frequency range	9 kHz to 2 GHz	100 kHz to 2 GHz	100 kHz to 2 GHz
Voltage range	200 µV to 10 V	2 mV to 100 V	2 mV to 100 V
Reflection coefficient r/%	up to 200 MHz 2	up to 1 GHz 2	up to 1 GHz 3

The measuring accuracy can be increased at the upper frequency limit by entering the test frequency and switching on the FRQ CORR function (see section 2.3.5.4 FRQ CORR).

ManualsPlus.com

2.3.2.2.4 Power Sensor

The power heads for the NRV can also be operated on the URV5.

ManualsPlus.com

2.3.3 Selection of Measurement Channel

The main measurement channel, from which the readout is derived, is selected by means of keys 17 (A) or (B). The other channel is designated as second channel and monitored in the background.

At the same time it is fixed for the operation of the instrument that all subsequent setting and input data only refer to the selected channel. In the case of dual-channel measurements (key 13 ΔEXT) the respective second channel is used for reference-value measurement.

Selected settings (e.g. ATT CORR, ΔINT, input data, etc.) are stored when changing the channel and are redisplayed by the LEDs on the display and in the keys when the original channel is switched on again.

If there is no probe in the selected measurement channel or if the probe is not properly inserted, the URV5 can be set and operated, but on the display 5 dashes (-----) will appear to indicate this status.

A probe is properly inserted if a measured value is indicated on the display.

ManualsPlus.com

2.3.4 ZERO Key (Zeroing)

Electrical zero need only be adjusted for voltage measurements in the most sensitive measurement range. This is necessary with all RF millivoltmeters using diode probes, since the detected output voltage of the probes may be less than 1 µV.

An interfering voltage at the input of the amplifier is added to the detected voltage and causes a reading error. Since the detected voltage of a diode detector is proportional to the square of the test voltage up to about 30 mV, the effect of this interfering voltage is dependent on the magnitude of the test voltage. Due to the square-law function, the readout voltage is

$$V_{readout} = \sqrt{V^2_{test} + \underbrace{V^2_{interf_{ext}} \pm V_{interf_{int}}}_{V^2_{interf}}}$$

where V_{test} is the AC voltage to be measured and V_{interf} the reading on the meter without test voltage due to an inaccurate zero adjustment. An interfering voltage of, for instance, 100 µV causes an error of approx. 0.5% with a test voltage of 1 mV. Zeroing is therefore only required if voltages are to be measured in the most sensitive range, i.e. voltages up to about 10 mV (100 mV with 100-V insertion units, 20-dB divider; 1 V with 40-dB divider).

With the aid of this zero adjustment both low external interfering voltages ($V^2_{interf_{ext}}$) and internal offset voltages ($V_{interf_{int}}$) can be eliminated.

No voltage may be present at the measuring head (or at the probe). To avoid stray pickup, the probe should preferably be inserted into the BNC adapter.

The key ZERO functions as an on/off key.

Zeroing with a duration of

approx. 5 s for the measurement rates F1 to F5
approx. 20 s for the measurement rate FØ

takes place on enabling the function and is signalled by 4 dots on display.

The use of the 20-s zero adjustment for the measurement rate FØ permits an adjustment which is exactly matched to the measurement.
In the case of inaccurate zeroing (approx. >1 mV; 10 mV for the 100-V probe) OUT is displayed. Zeroing remains switched off.

Basically the following holds:

ZERO function off → key unlit
ZERO function on → key lit following a successful zeroing.

ManualsPlus.com

Note: The zero adjustment should improve the measuring accuracy. Therefore, the following should be observed:

1) Allow for a warm-up of the basic unit and the required probes, i.e. adaptation to the ambient temperature.

2) Make sure that no voltage is present at the probes. (The RF probe should be inserted into the BNC adapter.)

3) Do not carry out a zero adjustment immediately after the measurement of high levels, since recharging of the capacitances (residual charges) causes slight delaying effects.

4) Do not move the cables of the probes during the zero adjustment. (Low voltages may be induced in the test cable by bending, which may affect the accuracy of the zero adjustment).

The residual error after the zero adjustment is specified in the data sheet. For the RF probe and the 10-V insertion unit it is still 10 increments of the display at a test level of 500 µV (other conditions as stated in the data sheet).

Key 16 ZERO is not evaluated in DC measurements. This is shown by the indication "dc" on the display.

2.3.5 Readout of Measured Value (COMPUTE keys)

Due to the great variety of measurement evaluations, the result of a measurement can be read out in the basic units V, W, dBm, dBV and relative to a stored reference value or to the value measured in the second channel.

The exponent is displayed in steps of three according to the physical units.

The URV5 offers in addition two possibilities of correction evaluation. Firstly it is possible to connect an attenuator/amplifier which is considered in the measurement result (ATT CORR key) and secondly the frequency response of the probe can be corrected at a known frequency entered into the URV5 (FRQ CORR key).

ManualsPlus.com

2.3.5.1 Readout in V, W, dBm, dBV (ABSOLUTE)

For readout of the measurement result in the basic units V, W, dBm, dBV key 13 ABSOLUTE must first be pressed. The units are then selected by means of the key SEL DIM. The measured value is cyclically read out in the units V, W, dBm, dBV. The indicated values are evaluated according to the following equations:

$$Ind_V = V_{test}$$

$$Ind_W = \frac{V^2_{test}}{Z}$$

$$Ind_{dBm} = 10 \log \left| \frac{P(V_{test}, Z)}{1\ mW} \right|$$

$$Ind_{dBV} = 20 \log \left| \frac{V_{test}}{1\ V} \right|$$

Ind ≙ indicated value
V_{test} ≙ test voltage
Z ≙ reference impedance

The key 11 SEL REL is inhibited and not evaluated.

2.3.5.2 Relative Readout (Δ, Δ%, ΔdB, X/REF, with ΔINT, ΔEXT)

With the aid of the relative functions, the measured value can be displayed relative to a reference value.

Relative evaluation can be made in four different ways:

- Difference between measured value and reference value,
- deviation in per cent or as logarithmic value,
- quotient of measured and reference value.

For readout of the measurement result in the relative units Δ, Δ%, ΔdB, X/REF one of the two keys 13 ΔINT or ΔEXT must be pressed first. The relative units are then selected by means of key 11 SEL REL. The measured value is cyclically read out in the units Δ, Δ%, ΔdB, X/REF.

In particular, the following applies:

dBm (absolute) → [Rel] → W (relative)

dBV (absolute) → [Rel] → V (relative)

(Rel = key ΔINT, ΔEXT)

ManualsPlus.com

The absolute units V, W are selected as described above by means of key 11 SEL DIM. The reference value to be used for the relative evaluation is determined by means of keys 13 ΔINT or ΔEXT. With ΔINT, the reference value internally stored for the selected measurement channel, with ΔEXT the value measured in the second channel (after preevaluation according to the basic unit) is used as reference value for the evaluation.

The reference value (with ΔINT) can be entered by means of the keys according to the blue key labelling (SHIFT) in V, W, dBm, dBV (DIM) and indicated by means of key 12 RCL INP (see section 2.3.5.6. Indication of Reference Values, and section 2.3.9.1 Entry of Reference Values).

Any measured value (of the main measurement channel) can also be used as reference value. (Key sequence: 8 SHIFT - 6 STO). With ΔEXT setting, the value measured in the second channel can be stored into the internal reference value register of the main measurement channel. For this purpose key 12 RCL must be pressed. On the display, the measured value of the second channel will be indicated, the LED REF is flashing. The measured value is stored as above with the keys operated in the sequence 8 SHIFT - 6 STO) (see also section 2.3.9.2).

For measurements referred to this one value as a constant, the setting ΔINT can then also be selected.

If only one probe is inserted or the probe of the second channel is not properly inserted,

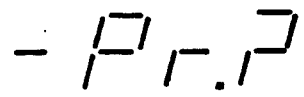

will be indicated on the display when actuating the key ΔEXT. URV5 returns to the original setting. Only when both probes have been correctly inserted, the URV5 can be set as desired.

The indicated value is evaluated according to the following equations:

$$\mathrm{Ind}_{\Delta} = X_{meas} - X_{REF}$$

$$\mathrm{Ind}_{\Delta dB} = 20 \log \left| \frac{X_{meas}}{X_{REF}} \right| \quad \text{or} \quad \mathrm{Ind}_{\Delta dB/W} = 10 \log \left| \frac{P_{meas}}{P_{REF}} \right|$$

$$\mathrm{Ind}_{\Delta \%} = 100 \frac{X_{meas} - X_{REF}}{X_{REF}} \qquad \text{for } Z_A \neq Z_B \text{ at } \Delta \text{ EXT}$$

$$\mathrm{Ind}_{X/REF} = \frac{X_{meas}}{X_{REF}}$$

ManualsPlus.com

where Ind ≙ indicated value

X_{meas} ≙ measured value according to basic unit (V, W)

X_{REF} ≙ reference value according to basic unit.
(The input unit is converted automatically.)
with ΔINT: internally stored reference value
with ΔEXT: measured value of second channel

Example:

V = 10.000 V (4 1/2 digit readout, 3 decimal places)
reference value X_{REF} = 9.912 V

The indicated values computed according to the above equations are

Ind_{Δ} = .088 (3 decimal places according to measured value)

$Ind_{\Delta dB}$ = .08 dB

$Ind_{\Delta\%}$ = .88%

$Ind_{X/REF}$ = 1.0088 (maximum resolution)

In the V and ΔLIN modes, the resolution of the readout is determined by the number of decimal places of the measured value (dependent on measurement rate - 3 1/2 to 4 1/2 digits - and measurement range). The reference value is matched during evaluation.

The resolution for the Δ% display mode is 0.01 % for readout values of < 200% and always 0.01 dB for the ΔdB mode.

The other cases, the resolution of the readout is not fixed and an exponent can be output in steps of three.

A flashing indication of ±19999 or ±19999 x $10^{\pm 19}$ means the display range has been exceeded.

2.3.5.3 ATT CORR Key

The URV5 offers the user the possibility of connecting an attenuator or amplifier between measurement source and measuring instrument, which will be considered in the calculation for the measured value display.

The ATT CORR. key 14 must be pressed for this purpose. If the LED in the key lights, the voltage present at the probe is corrected by the previously entered attenuation or amplification factor (negative sign).

Like all other inputs, the correction factor is entered via the secondary function level of the key (selection of input parameter by means of key 12 INP) and must be made in dB.

ManualsPlus.com

This correction is however only necessary if additional attenuators or amplifiers are connected between measuring head and test item and if these are then to be considered in the readout value. The level ranges of the various probes are automatically taken into account.

Example: $V_{readout} = 3.127 \times 10^{-3}$ V without correction

(1) ATT/dB = 20 dB

$\Longrightarrow V_{readout} = 31.27 \times 10^{-3}$ V with correction 1

(2) ATT/dB = -20 dB

$\Longrightarrow V_{readout} = .3127 \times 10^{-3}$ V with correction 2

2.3.5.4 FRQ CORR Key

In particular towards to specified frequency range limits the probes exhibit a frequency response error, which is specified as maximum permissible error. For precise measurements this is however often not satisfactory. Therefore, the frequency response has been individually measured for each probe during the production and together with the other probe data stored in the non-volatile memory of the plug-in adapter.

There is no automatic evaluation of this frequency response curve, since the URV5 does not include a frequency meter.

The user can correct the frequency response at a certain frequency with the aid of the correction curve stored in the plug-in adapter by entering the test frequency (selection of input parameter by means of key 12 INP, secondary function) and pressing key 14 FRQ CORR.

If the LED in key 14 FRQ CORR lights, the voltage present at the probe is corrected according to the frequency entered and the associated correction value. This operating mode is only useful if the frequency of the signal to be measured is known and a result is desired which is to be within the narrower error limits (see also data sheet and section 2.3.2 Probes).

Example:

test frequency:	300 MHz
probe:	10-V insertion unit
measurement error:	5% without correction
measurement error:	3% with correction

i.e. at this frequency the measurement error is reduced to about 1/2.

This function is inhibited for DC measurements!

ManualsPlus.com

Note: This frequency response correction is a numerical correction, for which it is absolutely necessary that the actual test frequency and the frequency entered into the URV5 agree.

This correction should therefore be used with care, since otherwise it may well have the opposite effect of improving the results.

2.3.5.5 COMP OFF Key

This is an auxiliary key which (in measurement mode) cancels all settings made with the aid of the COMPUTE keys - the URV5 being then set to ABSOLUTE with readout in V - or (in recall mode: RCL INP) causes the URV5 to leave this mode and to return to the measurement mode (all other settings being preserved).

2.3.5.6 Display of Stored Reference, Correction and Impedance Values (RCL INP key)

With the aid of key 12 RCL INP the internally stored input values can be displayed instead of the measured value.

This key is a stepping key, i.e. when it is pressed again, the next input value will be displayed (corresponding to LED display 1). The reference value, the correction values (frequency and attenuation) and the reference impedance can thus cyclically be indicated and checked. Another function of this key is switchover to the measurement mode, i.e. after indication of the reference impedance and pressing key 12 RCL INP the URV5 returns to the measurement mode.

Return to the initial display of the measured value is however also possible by means of keys 17 (A or B) for channel selection, or key 15 COMP OFF. In both cases the URV5 returns to the previously selected measurement function and display mode (channel A/B, ΔINT/ΔEXT etc.).

A new setting is also possible with the aid of keys 13 and 14 (ABSOLUTE, ΔINT, ΔEXT, CORR), keys 11 SEL DIM, SEL REL, 16 ZERO will however not be evaluated in the recall mode.

The secondary function level for correction of the indicated value can be selected by means of key 8 INPUT/SHIFT. Input parameters (REF, FRQ, ATT, Z) and units for REF (V, W, dBm ,dBV) as well as the indicated value are preserved and can separately be changed or corrected (see section 2.3.9.1).

ManualsPlus.com

Note for ΔEXT. setting:

Since in case of dual-channel measurement the reference value stored in the unit is of secondary importance, the value measured in the second channel is indicated first in this mode when the recall function (RCL INP) is called up. This is shown by flashing of the LED REF on display 1. If key 12 RCL INP is pressed again, the internally stored reference value is indicated next. Further operation is as described above.

2.3.6 PEAK (PEP) Key

The URV5 can measure the peak value of a modulated AC voltage present at the probe. The measured value is read out as an rms value.

The abbreviation PEP (= peak envelope power) is used in transmitter measurements and stands for the true power during one period of the carrier signal at the maximum momentary value of the modulation signal.

Therefore, the measured value ist read out in W when this function is switched on (LED in PEAK (PEP) key lights). The impedance value entered for the respective measurement channel is used as reference impedance. It is also possible to select another display mode by means of keys 11 SEL DIM and SEL REL. The measured value is however always read out as rms value of the peak value.

The gate time effective for PEAK measurement can be adjusted with the aid of the FILTER key and via the special function 3 as described in section 2.3.8 and basically corresponds to the measurement time (see Table 2-5). The gate time is the period of observation during which the peak value is determined and is followed by an automatic restart (internal reset of the peak-responding meter). Thus the gate time must be greater than the period of the measured signal.

This function is not effective for DC measurements (DC probe) and the key is not evaluated when actuated.

Table 2-5 [ ] - setting with FILTER key (F2/F4)

FØ	F1	F2	F3	F4	F5	← gate time (filter) setting
0.05/s	0.25/s	1/s	3.3/s	7/s	15/s	← display change
20 s	4.0 s	1 s	200 ms	40 ms	10ms	← gate time
20 s	4.1 s	1.1 s	300 ms	140 ms	60ms	← measurement time

(For dual-channel operation, the indicated measurement times are twice as long.)

ManualsPlus.com

Generally, the following instructions and restrictions must be observed for this measurement mode:

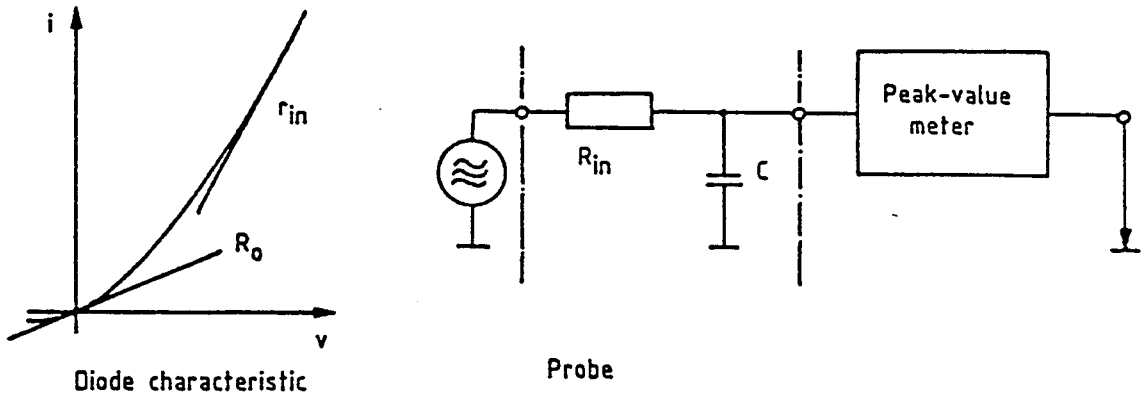

Fig. 2-7 Equivalent circuit diagram for peak-value measurement

As shown in Fig. 2-7, the internal resistance R_{in} of the measuring head diode forms in conjuction with the charging capacitor C a lowpass filter, with a level-dependent frequency response caused by R_{in}. Within the square-law range of the diode characteristic, the limit frequency (3 dB) is approx. 800 Hz for both insertion units (10 V, 100 V) and the RF probe. Since R_{in} is also temperature-dependent, this value is only valid at room temperature ($R_{in} \approx R_0$ (zero-point resistance) ≈200 kΩ).

At higher levels, measurements are possible with modulation and intermodulation frequencies up to the kHz range.

Definition of PEAK (PEP) measurement with respect to general measuring head characteristics

1. Unmodulated RF voltages:

With unmodulated RF voltages there are no or only slight differences in the result from a "normal" measurement and a PEAK (PEP) measurement. Minor deviations are due to a residual ripple of the RF voltage.

Basic measuring head characteristics (see Section 2.3.2.2) are as follows:

< 30 mV (300 mV) rms-responding meas. ⎫ for non-sinewave
> 1 V (10 V) peak-responding meas. ⎭ voltages

The values given in parenthesis apply to 100-V insertion units.

ManualsPlus.com

2. Modulated RF voltages:

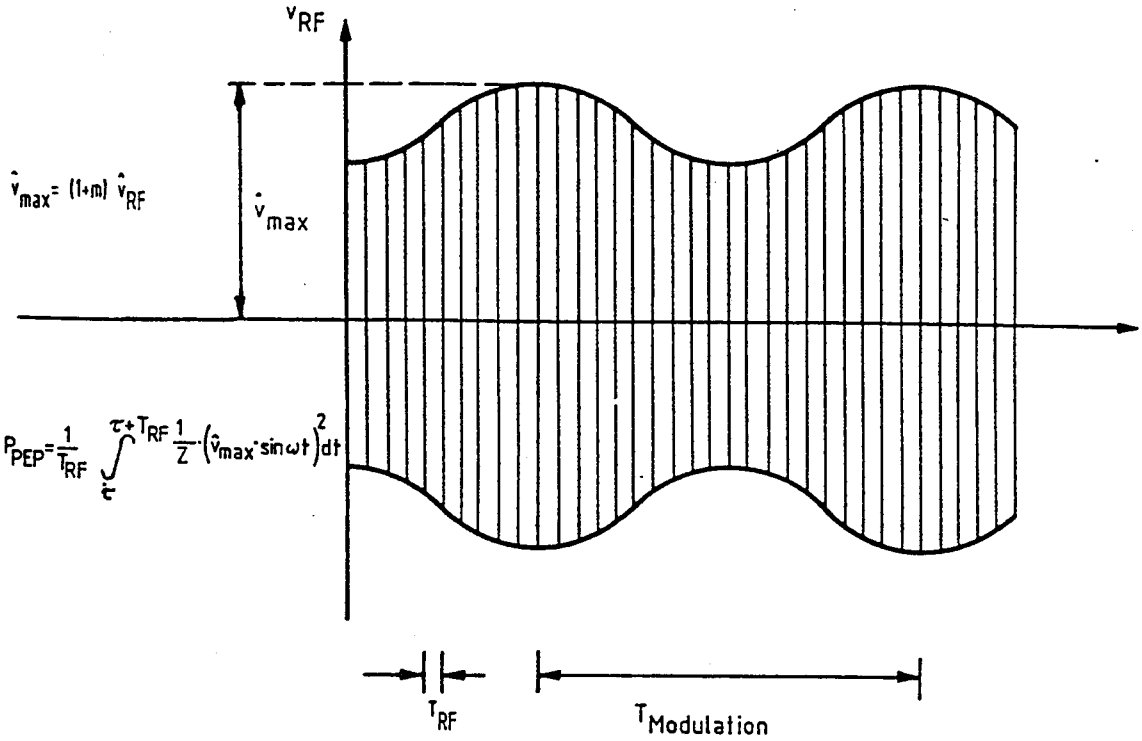

Fig. 2-8 Amplitude-modulated RF voltage

- PEAK (PEP) measurement (< 100 Hz)

  The PEAK (PEP) measurement can always be carried out up to modulation frequencies of about 100 Hz without causing a significant additional error.

  This holds true for any permissible input voltage.

- PEAK (PEP) measurement (> 100 Hz, < 1 V (10 V))

  At higher modulation frequencies, a value is obtained which is between the true rms (peak) value and the "normal" rms (average) value depending on the modulation frequency

- Measuring head characteristic

  At voltages > 1 V (10 V), the influence of the measuring head characteristic is predominant so that there is only little difference from the PEAK (PEP) measurement.

ManualsPlus.com

- Note for pulse modulation:

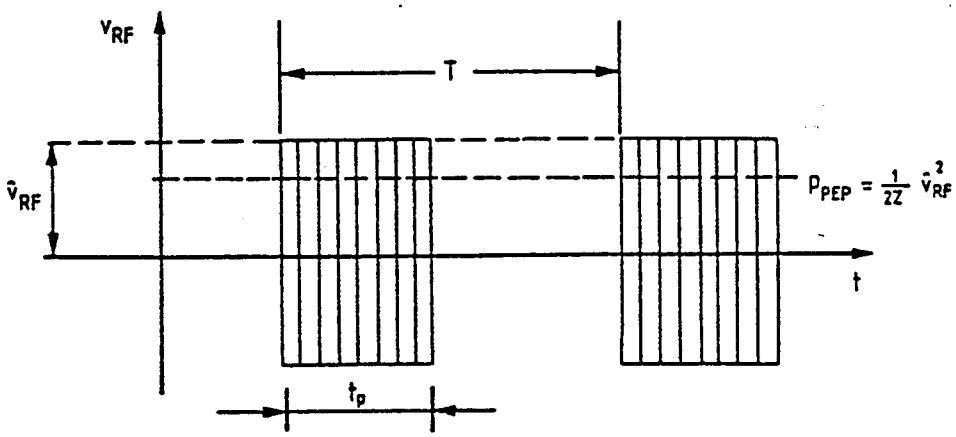

Fig. 2-9 Pulse-modulated RF voltage

The typical measuring error of pulse-modulated RF voltages at room temperature can be taken from Fig. 2-10. The curves shown apply to tp < T. The error decreases as tp → T.

ManualsPlus.com

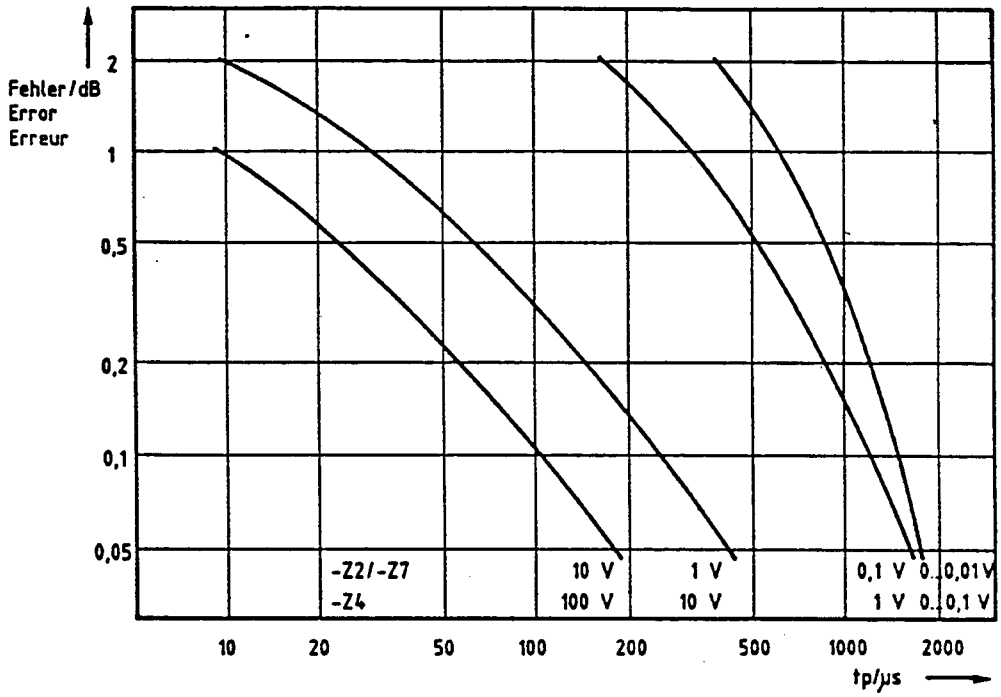

Fig. 2-10 Weighting error of PEAK(PEP) measurements for pulse-modulated RF with the use of URV5-Z2/-Z4/-Z7 as a function of the readout value.

ManualsPlus.com

2.3.7 Switching off Autoranging and Selection of a Measurement Range

The URV5 has a rapid automatic range selection facility, the switching speed of the autoranging circuit being matched to the selected measurement speed. During autoranging the display is blanked. The value indicated next is a valid measured value in the correct measurement range.

In some cases it may be advisable to switch off autoranging and to select a fixed measurement range.

Switchover between autoranging and fixed range setting can be made by means of key 9 AUTO RANGE, the automatically selected range being fixed by Range Hold.

The LED in key 9 AUTO RANGE lights when autoranging is operative.

The URV5 has another two keys 9 (UP↑, DOWN↓) which permit the automatically or manually selected range to be shifted by one range up or down. If this is possible, the URV5 briefly indicates the newly selected range on half the display size (e.g. 10^{-3}, 100^{-3}, 1 etc.). Autoranging is switched off if one of these keys is pressed (LED in key 9 AUTO RANGE goes out).

Holding an automatically selected range by pressing one of the three keys is advisable, for instance, if the input voltage is briefly removed and unnecessary switchover to the most sensitive measurement range is to be avoided.

It should particularly be noted that the range hold function only fixes a lower limit which will be retained in all cases. An overranging in the range hold mode, i.e. if the measured value is more than 22% above the nominal value of the selected range, will cause the URV5 to leave this range and to switch to the higher range in accordance with the input parameter. The entire display is then flashing.

After the overrange the instrument returns to the previously selected range.

ManualsPlus.com

Table 2-6 Nominal values in measurement ranges of probes

Range \ Probe	DC Probe	RF probe 10-V insertion unit	100-V insertion unit
1	1 V	10 mV	100 mV
2	10 V	100 mV	1 V
3	100 V	1 V	10 V
4	400 V	10 V	100 V

ManualsPlus.com

2.3.8 Measurement Speed (FILTER Key)

For optimum matching to an existing measurement system the URV5 features six measurement speeds (FØ to F5) which can be selected via the special function 3 (section 2.3.10).

> With the aid of the FILTER key, the two most important measurement speeds can be selected (F2/F4).
>
> The LED in key 7 lights when F2 or FØ, F1 is selected.

In Table 2-7 the display rates and measuring times for manual and computer operation are stated. The data for the manual operation are to be understood so that for instance at FØ there are two display changes per second, but the display is settled only after 16 s (like with computer operation).

The values given are merely guidelines and vary from probe to probe.

Table 2-7 [ ] - setting with FILTER key (F2/F4)

FØ	F1	F2	F3	F4	F5	←	filter
2/s	2/s	4/s	4/s	10/s	30/s	←	display change
16 s	4 s	1 s	260 ms	80 ms	35ms	←	measuring time with computer operation

Measurement speed for AC measurement

FØ	F1	F2	F3	F4	F5	←	filter
2.5/s	2.5/s	5/s	5/s	15/s	50/s	←	display change
12 s	3 s	750 ms	180 ms	55 ms	20 ms	←	measuring time with computer operation

Measurement speed for DC measurement

At the measurement speeds F4 or F5 there is only one measurement cycle, whereas at the other speeds F3 to FØ averaging over four measurement cycles takes place from step to step. With the settings FØ to F4 the A/D conversion time is 20 ms, the measured value being read out (unit V) in 4 1/2 digits, with setting F5 being the fastest mode of the URV5 the A/D conversion time is 2 ms and the measured value is read out in 3 1/2 digits.

ManualsPlus.com

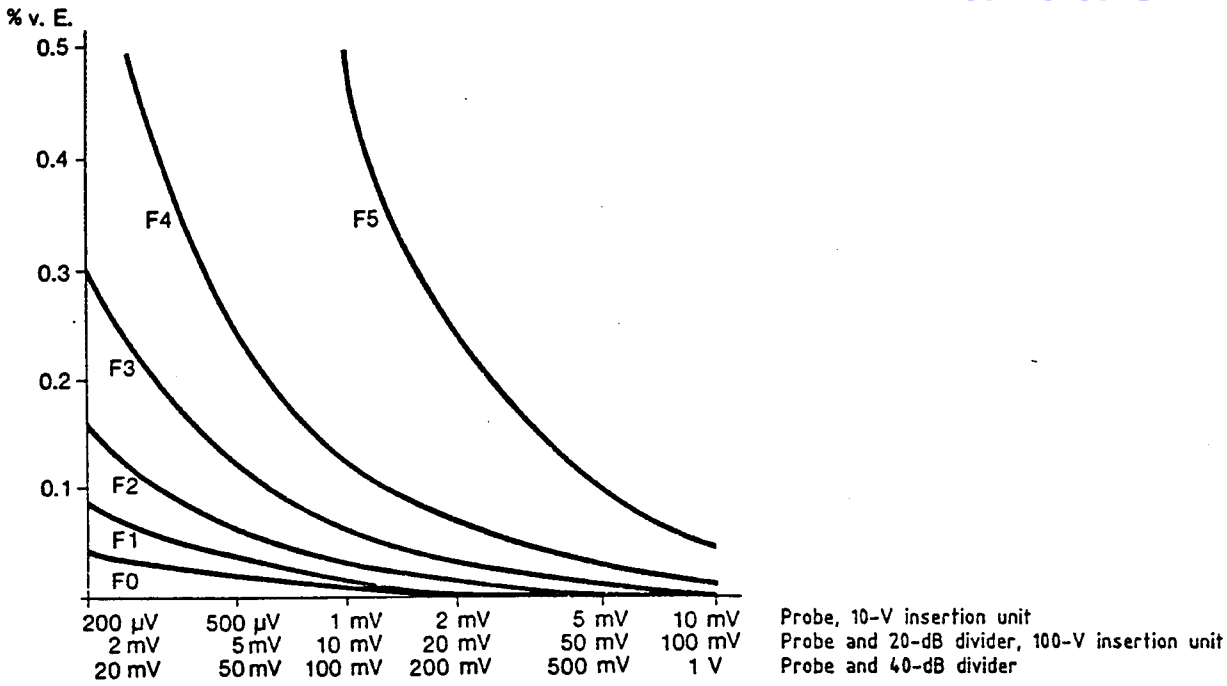

Fig. 2-11 Display noise

The display noise increases with the speed of the measurement.

Fig. 2-11 shows a group of typical curves for the various RF probes and insertion units.

2.3.9 Secondary Function Level

The secondary function level of the keyboard - blue markings on the keys - is used for entering data, such as reference value for relative value indication, correction values and for calling up the special functions (key 7 SPEC), e.g. calibration or input of the IEC-bus address. Switchover between the two function levels is effected by means of key 8 SHIFT, whose LED lights when the secondary functions are activated, while the LEDs in all other keys - except for the LEDs indicating the selected channel - go out. The measured value indicated last remains in the display. During the entry the entire measurement section of the instrument operates as usual and autoranging also remains operative.

If prior to the switchover to the secondary function level a reference or correction value has been indicated, the entered unit and the value remain in the display for correction.

ManualsPlus.com

2.3.9.1 Input of Reference Value, Correction Values or Impedance

For relative value indication the URV5 requires a reference value, for W/dBm evaluation a reference impedance and for correction a correction value. Therefore, the reference value, correction values and the reference impedance can be entered and stored for each channel separately. The channel must be preselected in the measurement mode (keys 17 A or B). The values entered are stored by means of key 6 STO.

When the instrument is switched off, the entire memory content is lost, but with the aid of the special function 2 the content can be written into a non-volatile EPROM. The values stored in the EPROM are then used as initialization values when the instrument is switched on.

For entering the desired value which is then displayed, the keys are used according to their blue markings.

The value is entered as a number with decimal point. The URV5 accepts numbers and points only as long as the scale length is not exceeded and the value can be displayed. The polarity sign may be changed as required during the entry.

Switchover for exponent input is made by means of key 11 EXP; the currently indicated exponent is erased.

The subsequently entered number(s) and the polarity sign are taken as entry data for the exponent. When key 11 EXP is pressed again, only the exponent is erased and can then be newly entered.

The unit of the reference value can be selected with key 11 DIM, by means of which the units V, W, dBm, dBV are cyclically changed. Similar to the arbitrary change of the sign during the entry, the DIM key may be pressed any time.

Key 12 INP is provided for selecting the input parameter (REF, FRQ, ATT, Z). Since upon entry of FRQ, ATT, Z the DIM units cannot be changed, key 11 DIM will not be evaluated in these cases. No LED lights on display 3.

An incorrect entry can be erased by means of key 10 CLEAR. The entire numerical value with the exponent and the sign are erased, not however the selected input parameter/unit.

ManualsPlus.com

With the aid of key 6 STO the currently displayed value is stored into the respective register for the input parameters (selected with key 12 INP). During this transfer the value is checked for acceptability and adherence to certain limit values. Not allowed are for instance negative impedances (see Table 2-8). In case of an error, the word

Err

is displayed on the URV5 and the instrument returns to the entry mode for correction.

Table 2-8 Limits of input parameters

REF	V	$\pm\ 1 \cdot 10^{\pm 9}$
	W	$+\ 1 \cdot 10^{\pm 12}$
	dBm	± 199.99
	dBV	± 199.99
FRQ		$+\ 1 \cdot 10^{\pm 12}$ excl. Ø
ATT		± 199.99
Z		$+\ 1 \cdot 10^{\pm 4}$ excl. Ø

2.3.9.2 Use of Measured Values as Reference Values

It is also possible to use measured values as reference values (sequence of keys to be actuated: 8 SHIFT - 6 STO). The following should be noted: the URV5 transfers the measured value into the memory. If the URV5 has not been in the compute mode before key 8 SHIFT is actuated, the value read out on the display is directly entered into the reference value register. If the URV5 was however in the compute mode, not the displayed value but the actual measured value will be stored. After return to the measurement mode, the new value Ø is displayed for the functions ΔLIN, Δ%, ΔdB and the value 1 for the function X/REF.

ManualsPlus.com

Example of relative value indication Δ%:

Key	Display 2	Units LED 3
	10.000	V
12 RCL INP		
	5.000	V
13 ΔINT		
	5.000	V, Δ
11 SEL REL		
	100.00	V, Δ%
8 SHIFT		
	100.00	V, Δ%
6 STO		
	.00	V, Δ%
12 RCL INP		
	10.000	V

A special feature is the use of a measured value of the second channel as reference value for the main measurement channel.

This is only possible with the setting ΔEXT.

For this purpose key 12 RCL INP must be pressed. The measured value of the second channel is then displayed. This is shown by flashing of the LED 1 REF. For use of this value as reference value, proceed as described above, i.e. the keys must be actuated in sequence 8 SHIFT - 6 STO.

12 RCL INP → 8 SHIFT → 6 STO

When the setting is changed from ΔEXT to ΔINT, this stored measurement value is used for relative-value indication in subsequent measurements.

ManualsPlus.com

2.3.9.3 Calling up of Special Function Level

The special function level can only be called up at the secondary function level by means of key 7 SPEC. The display shows the word

SPEC

Further instrument functions are now available which can be activated by pressing the numerical keys or the CLEAR key.

2.3.10 Special Function Level

The special functions of the URV5 are rarely required and therefore do not have an own key. They can be called up as described in section 2.3.9.3.

Table 2-9 Special functions

Code	Function
Ø	Display test
1	Input of address for IEC-bus operation
2	Storage of input values in EEPROM as initializing values for switch-on
3	Measurement speed FØ to F5
4	Display of calibration date (link X6 removed) Calling up of calibration routines (link X6 inserted)
5	Calling up of last error code
6	Checksum for individual EPROMs
7	Copying input values of main measurement channel to second channel channel A: A-A (channel B same values as channel A) channel B: B-B (channel A same values as channel B)
CLEAR	Error message: erasure of error message No error message: resetting of instrument

ManualsPlus.com

Special function Ø is an LED test which causes all display elements including the keys to light up for about 3 s. The instrument then returns to the measurement mode.

Special function 1 permits to enter the IEC-bus address or to select the talk-only mode of the IEC-bus interface (see section 2.4.2).

Since the URV5 uses as non-volatile memory a PROM (EEPROM) that can be electrically erased but not be overwritten indefinitely, the current reference values can be stored into this EEPROM with the aid of **special function 2.** When switched on, the URV5 is initialized in accordance with these stored values. After execution of the routine the instrument returns to the measurement mode.

Special function 3 permits selection of six measurement speeds (Ø to 5) for the URV5 (see also section 2.3.8 Measurement Speed). After calling up this function

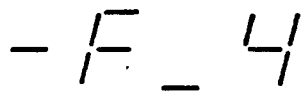

is for instance shown on the display, the figure 4 being the currently valid setting of the measurement speed.

Now one of the figure keys Ø to 5, the CLEAR or SPEC key can be pressed.

Ø to 5: new setting of measurement speed
and display for about 0.5 s

CLEAR: clear display

SPEC : return to special function level (SPEC)

SHIFT: return to measurement mode

Special function 4 operates in two different ways. Normally, the calibration routines that can be called up with this special function are inhibited. Therefore, the date and a letter for identifying the set of calibration values are displayed.

ManualsPlus.com

Example:

08.84 P

month year

Code, identifying that the measurement function has not been completely calibrated at the date stated.

12.83 C

Code, identifying that the measurement function has been completely and properly calibrated.

In manual operation the inhibition (only required in manual operation) can be eliminated by fitting link X6 on the computer board.

CAL

is then read out on the display.

Further routines are now available which permit the URV5 basic unit to be calibrated simply by connecting a calibration standard and by pressing a key.

Special function 5 can be used to redisplay an error message that has already been erased.

Special function 6 can be used to display the checksums of the individual EPROMs of the program memory. The respective EPROM is identified by the figure 1 or 2 on the exponent display 2. The checksum is the sum of all bytes of the EPROM without a carry bit.

Special function 7 permits all input values that have been entered for the switched-on main measurement channel to be used as input values for the second measurement channel.

ManualsPlus.com

Example: channel B switched on (LED in key 17 B lights)

```
REF-INPUT VALUES    URV5

REFV    A 1.0000E+00
FRQMHZ  A 1.0000E+06
ATTDB   A     .00E+00
Z   OHM A   50.00E+00
REFV    B      0.E+00
FRQMHZ  B   .2000E+09
ATTDB   B   20.00E+00
Z   OHM B  100.00E+00
```

input values prior to calling up SPEC 7

Sequence of keys to be actuated:
8 SHIFT, 7 SPEC, 17 7

The display reads out

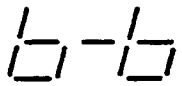

```
REF-INPUT VALUES    URV5

REFV    A      0.E+00
FRQMHZ  A   .2000E+09
ATTDB   A   20.00E+00
Z   OHM A  100.00E+00
REFV    B      0.E+00
FRQMHZ  B   .2000E+09
ATTDB   B   20.00E+00
Z   OHM B  100.00E+00
```

input values after calling up SPEC 7

Special function CLEAR comprises two functions. If no error message had been displayed on the URV5, the instrument is reset according to section 2.3.11 by calling up this special function. The input values will not be reinitialized. If there is an error message, this will be erased and the instrument returns to the measurement mode. The URV5 can be operated normally until a new error is detected.

ManualsPlus.com

2.3.11 Basic setting

The URV5 is either set automatically when it is switched on or by means of the special function CLEAR (no error message). Reference values are only initialized when the instrument is switched on.

Basic setting:

Measurement channel	channel A or channel B if a probe is only inserted
Unit	ABSOLUTE, V (or W for power head for NRV)
Measurement speed	F2 (SLOW)
Auroranging	switched on

Note for IEC-bus operation:

The basic setting with IEC-bus operation corresponds to the IEC-bus commands:

PA (PB), EØ, F2, KAØ, KFØ, OØ, RGØ, UØ__(U7__), (HØ, NØ, QØ, W3, Y1 additionally).

This can be achieved by sending the device-specific command C1 or by means of the universal commands DCL (device clear) or SDC (selected device clear).

ManualsPlus.com

2.3.12 Error Messages

Error messages of the URV5 are indicated to the user by

Err

or

E

followed by a 3-digit hexadecimal figure.

The "Err" message is briefly indicated and means incorrect data input as described in section 2.3 and 2.4.2. The URV5 then returns to the input mode.

The indication of "E" followed by a hexadecimal figure means an error in the hardware functions. Each hexadecimal figure stands for four different causes of error.

Example:

E040

means faulty calibration.

Clearing the error message:
An error message can be erased by calling up the special function CLEAR or the special function 4 (calibration) until a new error is detected. In the calibration mode the error message can be directly erased by means of the CLEAR key (secondary function).

Interruption of error message:
If a reference value is indicated (key 12 RCL INP) or the secondary function level is selected (key 8 SHIFT), the error message is interrupted and only reappears after switchover to the measurement mode. See also section 2.4.5 (IEC-bus operation).

ManualsPlus.com

Table 2-10 Errors in hardware functions

Error message	Cause
E001	Stored initializing data (EEPROM) for reference/correction values are missing or incorrect (switch-on test)
E002	Stored IEC-bus address (EEPROM) is missing or incorrect (switch-on test)
E004	Calibration measurement out of tolerance
E008	Fault in IEC-bus interface (actual state ≠ nominal state)
E010	Stored correction factors (EEPROM) are missing or incorrect (switch-on test)
E020	Probe data missing or erroneous
E040	Stored correction factor (EEPROM) for current measurement range is missing or incorrect (check in case of range switchover)
E080	Writing into EEPROM is not possible
E100	A/D converter faulty
E200	Incorrect internal zero adjustment (cyclic)
E400	Temperature measurement incorrect
E800	--

If several errors occur simultaneously, the corresponding error messages are added hexadecimally.

e.g.: E008 and E004 = E00C
E001 and E002 = E003

For further instructions, in particular measures for eliminating the faults, see section 3.

ManualsPlus.com

2.4 IEC-bus Control of URV5

The URV5 is fitted with a remote-control interface to IEC-Publ. 625-1 and can thus be connected to a data bus system for the transfer of setting data and measured values, i.e. to an IEC bus. All functions of the URV5 can be remote-controlled. The connection is provided on the rear panel of the instrument (Fig. 2.2).

The specific characteristics of the IEC-bus interface (control lines, handshake lines, data lines) and the timing of the data transfer can be taken from the respective standard specifications. The characters of the ASCII code used for the transfer are shown in Table 2-23.

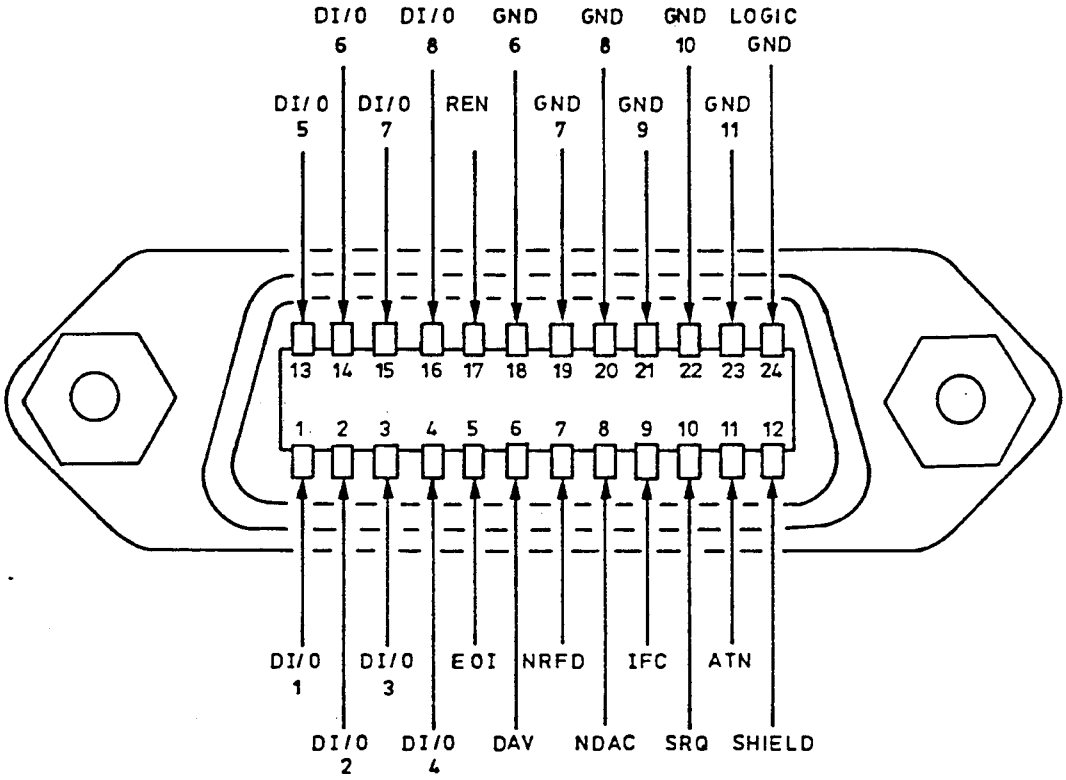

Fig. 2-12 Pin assignment of female connector 22

ManualsPlus.com

2.4.1 Interface Functions

The URV5 is designed for the following interface functions:

SH1	Source Handshake function full capability
AH1	Acceptor Handshake function full capability
T5	Talker function Capability for answering to serial poll, unaddressing if MLA, talk-only mode.
L4	Listener function Unaddressing if MTA
SR1	Service Request function full capability
RL1	Remote/Local function full capability
DC1	Device Clear function full capability
DT1	Device Trigger function full capability
PP1	Parallel Poll function Remote-controlled setting

ManualsPlus.com

2.4.2 Setting of Device Address/Talk-Only Mode

The device address of the URV5 is set via the keyboard and stored in an electrically erasable PROM ensuring non-volatile storage after the instrument is switched off. Special function 1 is used for this purpose.

> The current IEC-bus address can be displayed in the local mode for about 1 s by pressing the LOCAL/TALK key. (There will be no display in the talk-only mode!)

This special function 1 is called up by pressing the key 8 SHIFT followed by key 7 SPEC.

SPEC

appears on the display, and after pressing the figure key 1

e.g. IEC 9

figure 9 being the currently set device address.

For a further input, i.e. when changing the device address for IEC-bus operation, the blue markings of the keys are relevant, the keys DIM, +/- and SPEC having no significance, i.e. the instrument does not respond when these keys are pressed.

After calling-up of special function 1 or after an indicated input error (Err), one or two figures can be entered as new IEC-bus address without actuating the CLEAR key.

The 1st figure appears in the last but one place of the digital readout, in the last place a bar is displayed for identification of a further input

e.g. IEC2_ ≙ address 2

This bar will be overwritten if a second optional figure is entered.

e.g. IEC27 ≙ address 27

ManualsPlus.com

Values between Ø (ØØ) and 30 are permissible. If 31 is entered, it will be interpreted as talk-only mode in the memory and the interface will be initialized accordingly. If values > 31 are entered and key 6 "STO" is pressed,

Err

is displayed for an input error and the instrument returns to special function 1, indicating the incorrect value.

Key 9 "•/to" is used for direct entry of the talk-only mode and is accepted any time.

IECto

appears on the display.

The indicated address can be erased by means of key 10 CLEAR so that a new address can be entered. For each figure to be entered a bar is then displayed:

IEC_ _

Further entry as described above.

Key 6 STO is used for storing the entered and indicated address as well as for subsequent initialization of the IEC-bus interface. This is shown by brief flashing of the display and indication of the new value in accordance with the initializing value.

If prior to actuating the STO key the input has been in CLEAR mode, the original address is preserved. With values > 31 an error message will be output as described above and the instrument returns to special function 1.

When the URV5 is switched on, the stored IEC-bus address is read in, displayed and the IEC-bus interface is initialized accordingly.

With the aid of key 8 SHIFT the special function 1 can be left without changing the set device address irrespective of the displayed value.

ManualsPlus.com

2.4.2.1 Inserting/Removing a Probe during IEC-bus Operation (Remote Mode)

The probes should only be inserted into the basic unit in local mode, since in this case the probe data will subsequently be evaluated.

Inserting a probe in remote mode:

When a probe is inserted into the basic unit in the remote mode, this is recognized by a process controller only if the interface has been set (Q1 to Q3). The URV5 sends SRQ (114). With the aid of command CØ the process controller can initialize the reading in of the probe data. To signal the initialization of the probe data, the caption "init" appears in the display.

Removing a probe in remote mode:

When a probe is removed from the basic unit in remote mode, this will cause abortion of a current measurement if

1. the probe has been inserted in the main measurement channel (selected with PA or PB), or

2. if one of the two probes is removed in dual-channel measurement mode (trigger: X8, ΔEXT: U3X to U6X).

Following the removal of a probe and with interface setting Q to Q3, the URV5 always sends an SRQ (104).

ManualsPlus.com

2.4.3 Device-specific IEC-bus Commands

These commands can be subdivided into six groups:

1. Input pointer (Table 2-11)

2. Setting commands (Table 2-12)
   They cause setting of the measurement and evaluation section without starting a measurement.
   Example: setting of measurement range.

3. Data input commands (Table 2-13)
   They permit entry of reference values, correction values and impedance.

4. Interface commands (Table 2-14)
   They cause setting of the IEC-bus interface.
   Example: selection of terminator for data output.

5. Trigger commands (Table 2-15)
   They trigger an instrument function upon completion of which a result is written into the output buffer and can be output after a talk addressing.
   Example: triggering a measurement.

6. Special commands (Table 2-16)
   They are required for testing or repair of the instrument (see section 5).

7. Keywords (Table 2-17)
   They can be used to extend or modify the command set of the URV5 without having to make any changes on the instrument itself.

General instructions for IEC-bus programming:

Syntax:

*	Minimum of 2 characters plus separator or delimiter	
	e.g.: C1, U3 /CR/NL/ etc.	
* [ ]	Characters within brackets may be omitted	
	e.g.: U6 [[W][X]]	U6 U6X U6W U6WX
* <NUMBER>	1 or 2 figures up to a specified maximum value	
	e.g.: RG[<NUMBER>]	RG1 or RGØ1

ManualsPlus.com

* <DATUM> Any decimal number including sign and two-digit exponent

  e.g.: DV<DATUM> DV-3.0731E-Ø3

* Delimiters are /EXT//NL//CR/ and combinations (+EOI line)

  (Input pointers will be reset)

  → Table 2-18

* Separator is the comma (,)

* Spaces may be inserted into the command sequence as desired.

* Upper case or lower case letters may be used.

* Maximum number of characters per command = 30 characters

Example for a command sequence (PUC Controller):

IECOUT 7, "command 1, command 2, command 3"/CR//NL/

Such a command sequence may have any length, the length of the individual command being however limited to 3Ø characters only (for input data).

Note: Such a command sequence is read in up to a separator or delimiter, the command being then executed or set (in particular with "X2"). Commands requiring a longer time for execution (e.g. "01" or "X2" at slow measurement speeds) should therefore be at the end of a command sequence, since otherwise the IEC bus will be blocked for the time of the command execution. Any number of separators and delimiters will however be accepted without the bus being blocked.

Example (for PUC):

WRONG:

IECOUT 7, "PA, FØ, X2, IB, U3, FØ, KA1" /CR//NL/

Setting channel B

Execution of command X2 and blocking of bus by subsequent commands

ManualsPlus.com

BETTER:

```
IECOUT 7, "PA, FØ, IB, U3, FØ, KA1, IA, X2" /CR//NL/
```

Setting of channel B *

* **Note:**
Since in the string the pointer IB has been used for subsequent commands, the effect of IB must be reset by the pointer IA so that the measured value of channel A will also be stored as reference value of channel A.

CORRECT:

```
IECOUT 7, "IB, U3, FØ, KA1, PA, FØ, X2" /CR//NL/
```

Setting of channel B (second channel)

Setting of channel A (main measurement channel)

ManualsPlus.com

2.4.3.1 Tables for IEC-bus Programming of URV5 in Measurement Mode

Table 2-11 Input pointer

Command code	Function
IA IB	Input for channel A valid Input for channel B valid Note: With commands marked by * it is possible to define the **input channel** - independent of the selected **measurement channel** - for all subsequent commands by sending IA or IB once in the command string (resetting by delimiter or PA, PB).

Table 2-12 Setting commands

Command code	IA, IB	Function
CØ C1	- -	Reading in of test data into basic unit (switch over to UØ or U7) (≙ DCL, SDC after addressing) Basic setting: PA (PB), EØ, F2, KAØ, KFØ, RGØ, UØ__(U7__), HØ, NØ, QØ, W3, Y1 Note: Resetting of input pointers IA, IB
EØ E1	* *	Off On PEAK(PEP) measurement
FØ F1 F2 F3 F4 F5	* * * * * *	(AC) 16 s 4 s 1 s SLOW 260 ms 80 ms FAST 35 ms SUPERFAST 4 1/2-digit display 3 1/2-digit display measurement speed The values given are merely guidelines and vary from probe to probe.

ManualsPlus.com

Command code	IA, IB	Function
Syntax: KF<NUMBER> KFØ KF1 Syntax: KA<NUMBER> KAØ KA1	 * * * *	 FRQ CORR off FRQ CORR on corrective evaluation ATT CORR off ATT CORR on (It is also possible to send KFØ1 instead of e.g. KF1)
NØ N1	- -	Output with Output without alpha header
OØ O1	* *	Disabling Zero-correction Triggering, Enabling
PA PB	- -	Probe A Probe B Setting of measurement channel Note: Resetting of input pointers IA, IB
Syntax: RG[<NUMBER>] RG, RGØ RG1 RG2 RG3 RG4	 * * * * *	 Autorange 10 mV / 100 mV / 1 V / 10 V RF probe 10-V insertion unit 100 mV / 1 V / 10 V / 100 V 100-V insertion units 1 V / 10 V / 100 V / 400 V DC probe (It is also possible to send RGØ3 instead of e.g. RG3)

ManualsPlus.com

Command code	IA, IB	Function
UØ U1 U2 U7	* * * *	V dBm dBV W Output unit (ABSOLUTE)
U3 [[W][X]] U4 [[W][X]] U5 [[W][X]] U6 [[W][X]]	* * * *	Δlin Δ% ΔdB X/Ref in V referred to internal reference value Output unit (relative) Note: The letters X and/or W can be added to the commands U3 to U6. X ≙ ΔEXT (reference = second second channel) W ≙ relative readout in W e.g. U3X or U6WX (V is also permissible instead of W, e.g. U4 ≙ U4V)
YØ Y1 YX	- - -	off on Triggering Cyclical temperature measurement
Y?	-	Read-out of set status, i.e. if cyclical temperature measurement is switched on or off (output via SRQ).

ManualsPlus.com

Table 2-13 Data input commands

Command code	IA, IB	Function	
DU <DATUM>	*	Reference value in V	
DV <DATUM>	*	-"- in V	
DB <DATUM>	*	-"- in dBV	Data input
DM <DATUM>	*	-"- in dBm	
DW <DATUM>	*	-"- in W	
DR <DATUM>	*	Reference impedance in Ω	
DZ <DATUM>	*	-"- in Ω	
DA <DATUM>	*	Correction attenuation in dB	
DF <DATUM>	*	Correction frequency in Hz	
Syntax: D = [AA / BB]			
D =	*	Data copying to channel IA, IB	
D = AA	-	-"- values B same as in channel A	
D = BB	-	-"- values A same as in channel B	

Table 2-14 Interface commands

Command code	IA, IB	Function	
WØ	-	NL	
W1	-	CR	
W2	-	ETX	
W3	-	CR + NL	Delimiters for string output
W4	-	EOI	
W5	-	NL + EOI	
W6	-	CR + EOI	
W7	-	ETX + EOI	
W8	-	CR + NL + EOI	
QØ	-	off	
Q1	-	on (all SRQ)	
Q2	-	on (except for SRQ (80) ≙ meas.value ready, all SRQ)	Call of SRQ
Q3	-	on (only error SRQ, >=96)	
HØ	-	off	Auxiliary mode (PET time-out correction)
H1	-	on	

ManualsPlus.com

Table 2-15 Trigger commands

Command code	IA, IB	Function
XØ	-	Reset command for commands X3/X4
X1	-	Trigger command (≙ GET)
X2	*	Trigger command + storage of measured value as reference value
X3	-	Setting command for triggering measurement upon a service request
X4	-	Setting command for continuous triggering
X8	-	Trigger command for both measurement channels (measured values are separated by delimiters (corresponding to WØ to W8)
ZØ	*	Output of reference value
Z1	*	Output of reference impedance
Z2	*	Output of correction frequency
Z3	*	Output of correction attenuation

Table 2-16 Special commands

Command code	IA, IB	Function
SØ	-	LED test of display
S4	-	Indication of date under which the calibration values have been stored.
S5	-	Output of error code according to hardware function errors occurred.
S6	-	Checksum output of program memory.
ST	*	Status output of all device settings for the selected channel.
SP	*	Output of probe identification for the addressed channel

ManualsPlus.com

Table 2-17 Keywords

Command code	Function
CALIBRATION	Switchover between measurement and calibration mode: only commands for calibration are valid (CA..)

Table 2-18 Separators and delimiters

Symbol	Designation	ASCII decimal equivalent	Recommended use
,	Comma	44	Separator between commands
CR	Carriage Return	13	Delimiters
NL	New Line	10	
ETX		3	
EOI	If the EOI line is set during the transfer of the last character, this is also accepted as delimiter.		

ManualsPlus.com

2.4.3.2 Additional Explanations and Notes on IEC-bus Commands for URV5

Input pointers (Table 2-11)

IA, IB

The URV5 is a dual-channel measuring instrument, one channel being used as main measurement channel. All setting commands therefore refer to the selected main measurement channel.

With the aid of the pointer IA, IB it is possible to set also the second channel without effecting switchover from the measurement channel. IA is used for channel A, IB for channel B. IA, IB may however also be used for identification of the subsequent commands. This is to ensure correct setting of the instrument independent of the measurement channel also in the case of program jumps, interrupt routines, etc.

The effect of this pointer ends upon the reception of a delimiter (Table 2-18) or by switchover of the measurement channel with PA, PB.

Commands which are addressed by IA, IB, are marked by an * in the Tables.

Setting commands (Table 2-12)

CØ

With the aid of command CØ the data of the inserted probes can be read into the basic unit (e.g. after insertion of a probe into the URV5 und SRQ (114)).

The display unit is reset to V (or W in the case of a power head)!

C1

causes a basic setting of the URV5 (section 2.3.11 Basic Setting) and corresponds to the command sequence

PA(PB),EØ,F2,KAØ,KFØ,RGØ,OØ,UØ__(U7__),HØ,NØ,QØ,W3, Y1

PB, if a probe is inserted only in channel B.

U7, if power head for NRV is inserted in the channel.

The pointers IA, IB are reset by C1, i.e. the subsequent commands concern the selected measurement channel.

ManualsPlus.com

Example:

IB, C1, DV3.Ø, DF1E+6, U3

Input data for channel A if a probe is inserted. Channel A is set by C1.

C1, IB, DV3.Ø, DF1E+6, U3

Input data for channel B as defined by IB.

If there is a hardware fault (E xxx indicated on the display), this can be erased by "C1" until a new hardware fault is detected (section 2.3.12).

EØ, E1 — Switching off or on PEAK (PEP) measurement. Only possible with AC probes. With DC, E1 is not evaluated and SRQ(97) is sent if the interface has been set accordingly.

FØ...F5 — The commands FØ to F5 are used to set the measurement speed and the resolution of the URV5 (section 2.3.8 Measurement Speed).

> **Note:** A different measurement speed can be adjusted for the two channels.
>
> In the case of dual-channel measurements (ΔEXT: U3X - U6X or trigger X8) the measurement is carried out at the respective measurement speed selected after reception of the trigger command. The reaction time of the instrument (i.e. the time until the measured value is ready) can basically be determined by adding the individual measurement times . (Rule of thumb for different measurement speeds.)
> Since the measurement cycles partly overlap, the actual reaction time is considerably lower depending on the type of measuring head used and especially if the measurement speeds are the same for both channels.
> For carrying out the measurement under optimum time conditions, it is recommended to use SRQ (SRQ(80)) in the case of long measurement times.

KFØ, KF1
KAØ, KA1 — With the aid of these commands the frequency response correction (KFØ, KF1) and the attenuation correction (KAØ, KA1) can be switched off and on. For this purpose it is necessary to enter the test frequency by means of the command DF<DATUM> or the attenuation value by the command DA<DATUM>.

KFØ, KF1 is not evaluated in case of DC and SRQ (97) is sent provided that Q1 to Q3 has been set.

(See also sections 2.3.5.3 ATT CORR and 2.3.5.4 FRQ CORR.)

ManualsPlus.com

NØ, N1 — With the setting NØ, an alphaheader consisting of eight characters is output ahead of the numerical string (section 2.4.4 Data Output). It can be suppressed by means of N1.

OØ, O1 — The command O1 can be used to carry out a zero adjustment in the selected channel (defined by PA, PB, IA, IB).

Triggering and enabling the ZERO function: "O1"
Disabling the ZERO function: "OØ"

Note: The command O1 should always be at the end of a command sequence since on the one hand the commands (see section 2.4.3 Example for PUC) are immediately evaluated after reception of the separator or delimiter and on the other hand the zero adjustment takes about 4 s so that the bus will be blocked for this period if further commands are sent to the instrument.

After completion of the zero adjustment without error, the URV5 (Q1 to Q2) sends SRQ (90), in case of an error SRQ (115). The commands OØ and O1 are illegal for a DC probe (SRQ (97)).

PA, PB — With the aid of commands PA, PB the main measurement channel is selected, from which display and measured value (after a trigger command is sent) will be derived.

PA, PB cancels the effect of IA, IB.

If there is no probe in the selected main measurement channel, the URV5 (Q1 to Q3) will send SRQ (104).

RG, RGØ to RG4 — The measurement range permissible according to the probe inserted is adjusted with the aid of these commands.

UØ...U7 — The commands UØ to U7 are used to determine the output unit for output of the measured value via display or bus (section 2.4.4.2).

An X for dual-channel measurement (ΔEXT) and/or a W for readouts referred to the basic unit watt can be added in any sequence to the commands U3 to U6.

V for basic unit volt is also permissible.

If there is no probe in the selected measurement channel, the URV5 (Q1 to Q3) will send SRQ (104).

ManualsPlus.com

YØ, Y1
YX, Y?

After a certain period the URV5 automatically carries out a temperature measurement (additionally: AUTO ZERO measurement for input amplifiers) which interrupts the normal measurement cycle. This may have a disturbing effect for certain measurements.

This cyclical temperature measurement can be switched off by command YØ, switched on again by Y1 and an AUTO ZERO/temperature measurement can be triggered by YX.

Note: The user should be aware of the fact that after sending of the command YØ an additional measurement error may occur with an increasing period of time.

Therefore, this command YØ

1. should only be used after warm-up of the instrument (approx. 2 hours) and

2. be cancelled again by command Y1 as soon as permitted by the particular measurement.

The command Y? can be used to read out the selected status (YØ, Y1). If the interface has been set accordingly (Q1, Q2), the URV5 will send a service request after it has received the command Y?, and after decoding of the status byte this status can be read out (see section 2.4.6.5 Service Request).

Data input commands (Table 2-13)

Dx<DATUM>

The datum may be entered with or without exponent. The exponent consists of a maximum of 2 figures and a sign, whereas the mantissa may have any length (assuming a maximum command length of 30 characters). Only so many characters of the mantissa will however be considered as can be manually entered into the display (see section 2.3.9.1 Input of Reference Value, etc.). A positive sign and a zero ahead of the decimal point are optional. Spaces have no influence on the input. (DV may be used instead of DU and DZ instead of DR).

Example: Input of a reference value of 0.316 V. All commands stated are equivalent.

DUO.316, DU.316, DU+0.316, DU 0.316, DU316E-3

ManualsPlus.com

D= [AA / BB]

Copying of entire data memory.
The URV5 has separate memories for the two channels. In cases where the same data are required for channel A and channel B, these data need only be entered once into the instrument and can then be transferred into the other memory by means of the commands D = AA, D = BB.

D = AA: **all** data from channel A to channel B
D = BB: **all** data from channel B to channel A

D = AA, D = BB are independent of the pointer.

When the command D = is sent, **all** data of the channel that has been defined by PA, PB or IA, IB will be copied into the memories of the other channel.

Example:

IA, DA<DATUM>, DU<DATUM>, D= (≙ D=AA)
IA, ... , PB, DZ<DATUM>, DW<DATUM>, D= (≙ D=BB)

Interface commands (Table 2-14)

WØ...W8

The commands WØ to W8 are used to set the delimiter for the data output.

QØ...Q3

With the aid of the commands Q2 and Q3 the URV5 can be set so that only part of all available SRQ events will cause output of an SRQ (e.g. Q3 only error SRQs).

The division into Q1, Q2, Q3 commands and the coding of the status byte in case of a service request is described in section 2.4.6.5.

HØ, H1

Auxiliary mode

With the aid of command H1 the URV5 can be set so that after a TALK addressing it always starts to transfer the first character of the output string.

This mode can be switched off by HØ.

ManualsPlus.com

This command is for instance necessary when using older CBM computers (design state 1982), since these cause an asynchronous abortion of the INPUT command after a period of 64 ms and, hence, errors may occur in the data output from the URV5 to the controller. If the URV5 starts to transfer the first character while the computer aborts the INPUT command, the URV5 will continue with the second character when there is the next TALK addressing, so that the first character is missing in the string read in by the computer.

The command H1 should however only be used with the computers referred to above, so that for other controllers the possibility of partial string transfer is preserved.

When using CBM computers (design state 1982), care should be taken that the delimiter CR (carriage return) has been set for the URV5 (command W1).

Trigger commands (Table 2-15)

X1 Just as the universal command GET (see section 2.4.6.4 Device Trigger) the command X1 causes the URV5 to start a measurement with the selected settings and to store the result in the output buffer. If the interface has been set accordingly, a service request will be output after completion of the measurement.

X2 The command X2 has the same effect as X1 and GET, only that the measured value is additionally stored as reference value.

One special point of this command should however be mentioned:

The control character X2 should always be used as last command before the delimiter, since after reception of X2 the URV5 is blocked for any further commands. This means that if further setting commands are sent to the URV5 after X2, the IEC bus will be blocked until X2 has been executed (e.g. 16 s with a measurement speed FØ). X2 may be followed by any number of delimiters.

If a relative function (ΔINT) had previously been selected by means of U3 to U6, the next output value will already be output relative to this value, i.e. the result is either Ø or 1.

When the input parameters IA, IB are used, the result of this measurement can also be stored as reference value of the second channel.

ManualsPlus.com

Example:

Measurement in second channel and switchover to measurement in main channel relative to this reference value (ΔINT).

IECOUT 9, "PB, IA, X2" . . Take care of . measuring time! .	Measurement in channel B, with the aid of input pointer IA measured value is stored as reference value for channel A.
IECOUT 9, "PA, U5, X1"	Measurement in channel A, ΔdB calculation.

X3 — The command X3 has the advantage that a special trigger command (X1, X2, GET) may be omitted so that the measurement speed will be increased.

X4 — Command X4 is a setting command like X3 and triggers free-running measurements, i.e. the URV5 itself starts a measurement and the next one immediately upon completion of the previous measurement. This makes for maximum measurement speed.

XØ — The settings X3 and X4 can be reset by means of the control character XØ.

X8 — Command X8 can trigger a measurement for **both** channels. The measured value will be evaluated according to the respective channel settings (see note on page 2.60 under FØ...F5).

The two measured values are separated by delimiters (set by WØ to W8) and can thus be received by the controller by reading them twice.

If a measurement is triggered without the necessary probe(s) being inserted, SRQ(104) will be sent if the interface has been set accordingly (Q1 to Q3).

ZØ to Z3 — With the aid of the commands ZØ to Z3 the internally stored input values (reference value, reference impedance, correction frequency and correction attenuation) are written into the output buffer.

The output buffer can be read out by a TALK addressing, but this can be done only once (except with X8). No further command may be sent between the trigger command and the TALK addressing since otherwise the output buffer will be erased. The data format for the output is described in section 2.4.4.2.

ManualsPlus.com

Special commands (Table 2-16)

SØ LED test for approx. 3 s.

S4 Display of calibration date of basic unit for approx. 3 s.

S5 Error code output, can be read into the controller after a TALK addressing.

S6 Checksum output of the program memory, can also be read into the controller after a TALK addressing.

Format: CHKSUMS_XXXXH_PX.Y

ST Status output of all current device settings, can be read into the controller after a TALK addressing.

Format: PA,EØ,F2,KAØ,KFØ,OØ,RGØ,UØ__,HØ,NØ,QØ,W3,Y1

the selected main measurement channel is identified by PA, PB or the second channel by IB, IA. If Q1 to Q2 has been set, SRQ (85) will be sent.

SP Using the special command SP, the status of the probes can be read out (assignment with IA, IB).

No probe in the channel:
Format: PA,____ NO _ PROBE

Test adapter or faulty probe
Format: IB, TEST-ADAPTER

Correctly calibrated probe:
Format: PB, designation, serial No., cal. date
12 byte 10 byte 8 byte

e.g.
PB, URV5-Z1 _____, 102587/001, 08.07.87

This enables the controller to identify the probe automatically!

Note: The commands SØ to ST clear the set trigger mode as well as a valid value in the output buffer.

Keyword (Table 2-17)

The command set of the URV5 is switched over to calibration mode by means of the keyword CALIBRATION. The URV5 only accepts commands whose first two letters are CA. Other commands will not be accepted and cause a service request (SRQ (97)) if the interface has been set accordingly.

The keyword SERVICE enables additional commands which are only used for testing or checking of the URV5. The command set in the measurement mode is thus extended.

ManualsPlus.com

2.4.4 Data Output

The URV5 is able to output a measured value, the reference values, error code, single-line or multiple-line text strings.

After addressing by the controller, the output format is identical in the talk-only mode and in the talk mode.

2.4.4.1 Text String Output

After being addressed as talker, the URV5 is ready at any time to answer the controller. Under certain conditions the URV5 will therefore output a text string instead of data.

The string "URV5 IN LOCALMODE" is output in local mode after talker addressing.

The string "URV5 NOT TRIGGERED" is output in remote mode after talker addressing without previous triggering. If the interface has been set accordingly (Q1 to Q3), the output of SRQ (byte 99) is linked.

The string "URV5 NOT READY" is output if the instrument is not ready to produce a measured value. (With Q1 to Q3, output of SRQ [byte 101].)

The string "URV5 PA NO PROBE" or "URV5 PB NO PROBE" is output if no probe is contained in the selected measurement channel (A or B) and the attempt is made to trigger a measurement by means of a trigger command (X1 to X4, X8). (With Q1 to Q3, output of SRQ [byte 104].)

2.4.4.2 Data Output in Measurement Mode

The measured value, reference value or error code can be output either as numerical value only (control character N1) or as numerical value plus preceding 8-digit alphaheader (control character NØ). The structure of the alphaheader is shown in Fig. 2-13. Three characters are provided for the device function (Table 2-19), three for the unit (Table 2-20), one for special identification such as overflow (0), overranging or underranging in case of range hold (H, L) etc. and one character for allocating the numerical value to a measurement channel (A for channel A, B for channel B).

ManualsPlus.com

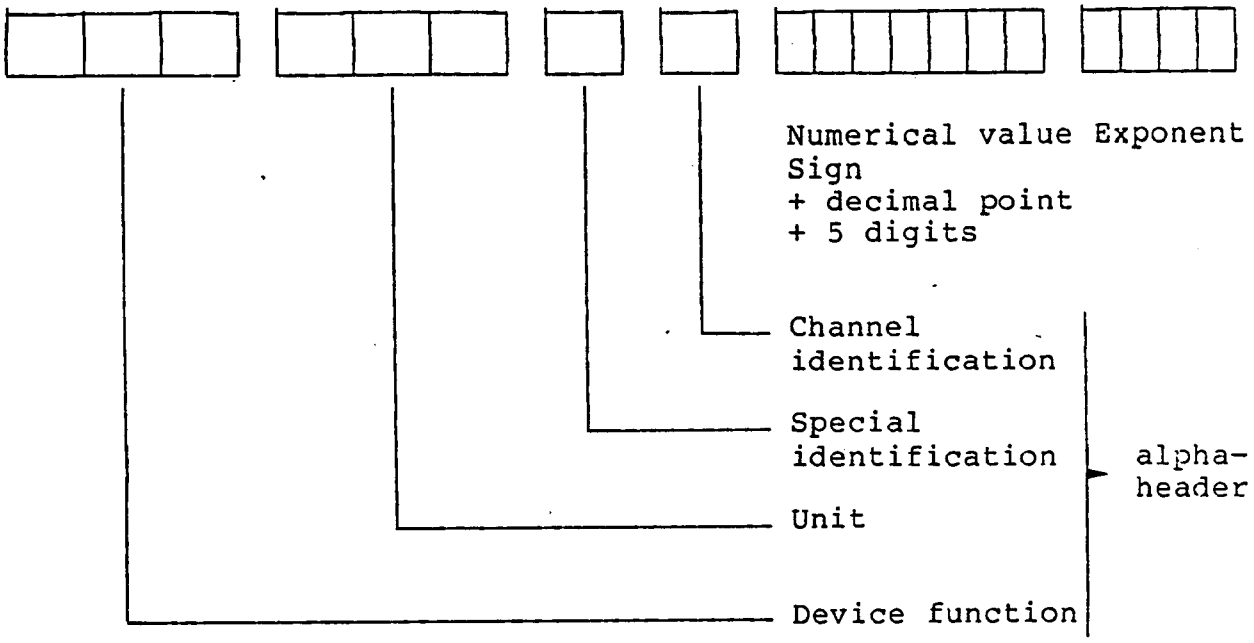

Fig. 2-13 Format of data output

The numerical value is always output with exponent.

Example:

- Output of a valid measured value
  1.0032 V (DC) (channel A)

  DC_V___A_1.ØØ32E+ØØ

- Output of a valid measured value
  $1.0200 \cdot 10^{-3}$ W (AC, channel B referred to second channel A, Δlin)

  AC_WDLXB_1.Ø2ØØE-Ø3

- Output of a reference attenuation
  20 dB for channel A

  ATTDB__A_2Ø.ØØE+ØØ

The data output is terminated by the set delimiter (Table 2-18).

ManualsPlus.com

Table 2-19 Coding of device function for data output

Code	Function
AC_	AC measurement
DC_	DC measurement
REF	Reference value
ATT	Reference attenuation
FRQ	Reference frequency
Z__	Impedance

_: Space

Table 2-20 Coding of output unit

Code	Function
V__	V
DBV	dBV
DBM	dBm
W__	W
VDL	Δlin (V or W)
WDL	
VD%	Δ% (V or W)
WD%	
VDB	ΔdB (V or W)
WDB	
VRL	X/REF (V or W)
WRL	
DB_	dB for ATT (attenuation value)
MHZ	MHz for FRQ (reference frequency)
OHM	Ω for Z__ (impedance)

_: Space

ManualsPlus.com

Table 2-21 Special identification

Code	Meaning
-	Valid measured value
X	Setting ΔEXT
H	Overranging
L	Underranging
O	Display overflow

_: Space

In the case of a hardware error the output string is adapted to the general structure of the alphaheader.

E R R C O D E _ X X X X H

- H: Identification for hexadecimal number
- X X X X: Coding as described in section 2.3.2.
- E: Special identification
- C O D: Unit
- E R R: Device function

Example: ERRCODE_ØØ1ØH

2.4.5 Error during IEC-bus Operation

(For error messages see section 2.3.12).

If a hardware error occurs during IEC-bus operation, this will be read out on the display as described in section 2.3.12. After talker addressing the error code can be directly read into the controller. This is also possible after the command "S5" (measurement mode only) has been sent to the URV5.

The command "C1" erases the error until a new hardware error is detected.

In the calibration mode the error can be erased by sending the command "CAC1".

ManualsPlus.com

2.4.6 Group of Addressed and Universal Commands

2.4.6.1 Table of Universal Commands

	Command	PPC/PUC	hp 9835/45	hp 9825	Tekt. 4051/52
addressed	Selected Device Clear	IECLAD9 IECSDC IECUNL	RESET 7Ø9	clr 7Ø9	WBYTE@41,4,63:
	Group Execute Trigger	IECLAD9 IECGXT IECUNL	TRIGGER 7Ø9	trg 7Ø9	WBYTE@41,8,63:
	Go to Local	IECLAD9 IECGTL IECUNL	LOCAL 7Ø9 or LOCAL 7 *	lcl 7Ø9 lcl 7*	WBYTE@41,1,63:
	Parallel Poll Configure	IECLAD9 IECPPC IECPPE S P IECUNL	PPOLL CONFIGURE 7Ø9; mask	polc 7Ø9, mask	---
	Parallel Poll Unconfigure (addressed)	IECLAD9 IECPPC IECPPD IECUNL	PPOLL UNCONFIGURE 7Ø9	plu 7Ø9	---
	Serial Poll	IECSPL9,s%	STATUS 7Ø9; s	rds(7Ø9)A	POLL A,S;9
not addressed	Device Clear	IECDCL	RESET 7	clr 7	WBYTE@2Ø:
	Local Lockout	IECLLO	LOCAL LOCKOUT 7	llo 7	WBYTE@17:
	Parallel Poll Unconfigure (universal)	IECPPU	PPOLL UNCONFIGURE 7	plu 7	---
	Parallel Poll	IECPPL V%	PPOLL (7)	pol(7)A	---

* LOCAL 7 switches off the REMOTE line. Prior to the output of new IEC-bus commands, the REMOTE line must be reactivated by REMOTE 7.

ManualsPlus.com

2.4.6.2 Remote/Local

When the URV5 receives its listen address from the controller, it changes to the remote mode and remains in this mode also after completion of a data transfer. The front-panel controls are disabled in the remote mode, only all indicators and the LEDs in the keys remain operative. The remote mode is indicated by the LED REM and, if applicable, by

SRQ (URV5 sends service request)
LLO (URV5 is in local lockout mode)
READY (valid value in output buffer)

The status of the interface can thus be checked. If the URV5 receives the addressed command GTL (go to local) or if the LOCAL key is pressed, it returns to the local mode, i.e. settings can be made manually and the LED REM goes out.

If the LOCAL key is not inhibited (see below), it has always priority over the IEC bus. This means that a transfer on the bus can be interrupted by this key. If the URV5 was in TALK mode and the LOCAL key is pressed before the delimiter has been transferred, this may even cause blocking of the IEC bus.

The LOCAL key can be inhibited by the controller with the aid of the LLO command (local lockout). This is indicated by the LED LLO lighting up on display 5.

If the mode changes from remote to local to remote, the settings

QØ to Q3
NØ, N1
WØ to W8

are preserved.

2.4.6.3 Device Clear

If the controller sends the universal command DCL (device clear) or the addressed command SDC (selected device clear), the URV5 returns to its basic setting (see section 2.3.11 Basic Setting). Basic setting is also restored when the URV5 is switched on or when it receives the IEC-bus command "C1".

ManualsPlus.com

2.4.6.4 Device Trigger

When the URV5 receives the addressed command GET (group execute trigger), it immediately triggers a measurement with the selected setting. This trigger command corresponds to the device-specific trigger command "X1", but requires much less time for execution than X1.

2.4.6.5 Service Request

By setting the line SRQ (service request) the URV5 is able to request service from the controller. This is however only useful if the controller is to be informed of the completion of a measurement or autocalibration or of an error. The interface can be set accordingly by means of the command QØ to Q3 (Table 2-14).

An * in Table 2-22 means that with setting Q1 to Q3 an SRQ will be made, "-" means that no SRQ will be made in this case.

If after reception of a service request the controller carries out a serial poll, it can determine the device status which has caused the service request be decoding the status byte (Fig. 2-14 and Table 2-22).

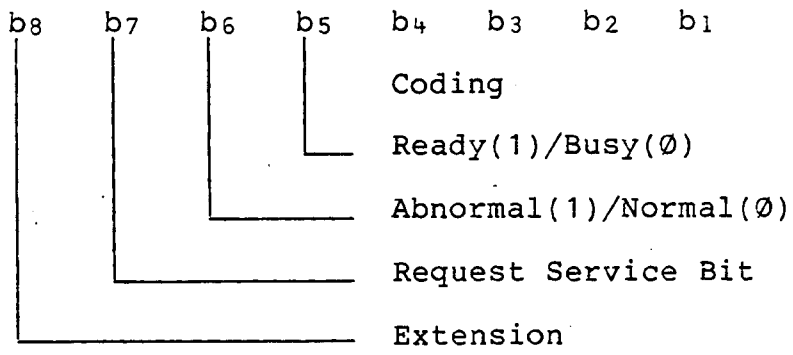

Fig. 2-14 Status byte

ManualsPlus.com

Table 2-22 Coding of status byte

Device status	Status byte	Decimal equivalent	Q1	Q2	Q3
Measured value ready	0 1 0 1 0 0 0 0	80	*	-	-
Line (of multiple-line text) ready	0 1 0 1 0 1 0 1	85	*	*	-
Calibr. value ready	0 1 0 1 0 1 1 0	86	*	*	-
Auto offset on	0 1 0 1 0 1 1 1	87	*	*	-
Auto offset off	0 1 0 1 1 0 0 0	88	*	*	-
Zero measurement ready	0 1 0 1 1 0 1 0	90	*	*	-
Syntax error	0 1 1 0 0 0 0 0	96	*	*	*
Command illegal	0 1 1 0 0 0 0 1	97	*	*	*
Input data incorrect	0 1 1 0 0 0 1 0	98	*	*	*
Controller input without trigger	0 1 1 0 0 0 1 1	99	*	*	*
Hardware error	0 1 1 0 0 1 0 0	100	*	*	*
URV5 not ready for output	0 1 1 0 0 1 0 1	101	*	*	*
Overranging during range hold	0 1 1 0 0 1 1 0	102	*	*	*
No probe in measurement channel	0 1 1 0 1 0 0 0	104	*	*	*
Calibration faulty	0 1 1 1 0 0 0 1	113	*	*	*
Change of probe (insertion of a probe)	0 1 1 1 0 0 1 0	114	*	*	*
Zero adjustment incorrect	0 1 1 1 0 0 1 1	115	*	*	*

ManualsPlus.com

2.4.6.6 Parallel Poll (PPOLL)

The URV5 can be configured by the IEC-bus controller for an answer to a parallel poll by means of the primary command PPC followed by the secondary command PPE. The PPE command has the form "X11ØSPPP". The three least-significant bits PPP designate the binary coded number of the data line on which the answer is to be made.

The parallel poll output of the URV5 is linked with the SRQ, i.e. via the configured bit (data line) the controller can recognize from a parallel poll sequence whether the URV5 has made a service request or not.

Example: PPE = Ø11Ø1Ø1Ø allocates the bus data line DIO3.
S = 1 causes the PPOLL answer 1.

Example for the Controller PUC from Rohde & Schwarz:

Configuration: S = 1
Data line 5 for PPOLL in case of SRQ

(Note: Contrary to the definition of the PPE command, the data lines are designated by the figures 1 to 8 in this case.)

```
  10  IECSRQ GOTO 1000
      .
      .
 100  IECLAD9: IECPPC: IECPPE15: IECUNL   ┐  Configuration
 110  IECOUT9, "Q1"                       │  PPOLL and
      .                                   ├► SRQ enabled
      .                                   │  for URV5
      .                                   ┘
 200  IECLAD9: IECGXT: IECUNL             ┐  Trigger command
      .                                   │
      .                                   │  Upon completion
      .                                   ├► of measurement
      .                                   │  the URV5 sends
                                          │  SRQ(80); eva-
 999  GOTO 200                            ┘  luation program

1000  IECPPL P%: PRINT P%                   PPOLL sequence
      .                                     P% = 16
      .
1050  IECSPL9, S%: PRINT S%                 SRQ poll
      .                                     S% = 80
      .
1100  IECIN9, MW$: PRINT MW$                Read-in of
1200  IECRETSRQ                             measured value
```

ManualsPlus.com

2.4.7 Output of Measured Value in Talk-Only Mode

For logging the measured values without the aid of an IEC-bus controller, data can be output via the IEC-bus connector to a listen-only device with IEC-625 interface. This unit, for instance a printer, must be set to LISTEN ONLY mode and the URV5 to TALK ONLY mode (see section 2.4.2 Setting of Device Address/TALK ONLY).

In this mode the URV5 is operated from the front panel and any value indicated on the display can be output to the listen-only device by pressing key 6 LOCAL/TALK. The coding is described in section 2.4.4 Data Output. The delimiter is fixed, i.e. each output is terminated by CR (carriage return) and NL (new line).

ManualsPlus.com

2.5 Analog Output

With the aid of the analog output option a DC voltage proportional to the indicated value can be output. This voltage is produced by a 12-bit D/A converter in step with the rate of the display, i.e. if the URV5 is operated via the IEC bus, the voltage value can only be renewed by triggering of a measurement. The operating range of the output voltage is -2 to +2 V with a resolution of 1 mV (Z_{out} = 1 kΩ). The output is referred to safety ground (chassis ground).

The following relationship applies:

$$\frac{\text{Output voltage}}{\text{mV}} = \frac{\text{Numerical value *)}}{10}$$

*) without decimal point and exponent

Example:

Readout	Output voltage
11.500 V	+ 1.150 V
-37.25 dBV	- 0.372 V
1.13 %	+ 0.011 V

Due to the great number of conversion modes of the URV5 there is a corresponding number of possibilities of controlling the output voltage of the analog output:

linear output, absolute	(V, W)
linear output, relative	(ΔV, ΔW, Δ%, X/Ref, channel A/B)
logarithmic output	(dBV, dBm, ΔdB, channel A/B)

It should be noted that there may be jumps in the output voltage if the number of digits of the displayed value is changed by switchover of the measurement range or display format. A measurement range switchover can be avoided by means of the RANGE keys in case of underranging. In case of major changes of the test voltage, the readout should however be switched to dBV, dBm or ΔdB. With logarithmic indication the resolution is always 0.01 dB and the output voltage changes by 1 mV for a variation of 0.1 dB of the measured value and by 10 mV for a variation of 1 dB.

With a display range of -199.99 to +199.99 (dBV, dBm, ΔdB) the entire measurement range of the URV5 can be covered.

ManualsPlus.com

2.6 IEC-bus Commands in Calibration Mode

These commands become effective upon entry of the keyword CALIBRATION in the measurement mode. The commands listed below are then only admissible.

1. Input pointers

Command code	Function
CAIA CAIB	Input for channel A Input for channel B **Note:** With the aid of these input pointers especially the commands CAFØ to CAF5, CARG<NUMBER> and CA01 can be controlled independently of the selected measurement channel. *

2. Setting commands

Command code	Function
CA2H CA2L	Driving of DC output (+2,047 V) Driving of DC output (-2,048 V) **Note:** CAE1 need not be sent for switchover between these two commands. (This function is used for adjustment of the DC output option.)
CA1 CA5 CA6	Calibration function (for temperature sensor) Calibration function (for AC measurement) Calibration function (for DC measurement) **Note:** These functions are used for calibration of the basic unit.

ManualsPlus.com

Command code	Function
CAHC<NUMBER>	Auxiliary calibration function (for calibration of probe) <NUMBER>: Ø = DC 1 = AC+ 2 = AC- 3 = AC+/- 4 = temp. sensor } Measurement without load impedance 11 = AC+ 12 = AC- 13 = AC+/- } Measurement with load impedance **Note:** This is an auxiliary command for calibration of the probe which cannot be carried out by the user. With the aid of the CAL command only equivalent measured values can be produced, which can be read in by the controller.
CACØ CAC1	Reading probe data into URV5 Calibration clear **Note:** When this command is sent 1. a selected measurement range will be reset, 2. the URV5 will return to the selected calibration function if a measured value is read out (after sending CAX1), 3. an error will be erased.
CAE1	Calibration end **Note:** This command is used for terminating a calibration routine. It must be sent to the URV5 if the calibration function is changed. Example: CA1,....., CAE1, CA4
CAPA CAPB	Calibration/measurement channel A Calibration/measurement channel B

ManualsPlus.com

Command code	Function
CAFØ to CAF5	Filter setting, as in measurement mode * can be controlled by CAIA, CAIB.
CANØ CAN1	Output of value with alphaheader Output of value without alphaheader
CAOØ CAO1	Disabling Triggering/Enabling Zero adjustment **Note:** A zero adjustment can only be made with a properly calibrated AC probe. * can be controlled by CAIA, CAIB.

3. Data input commands

Command code	Function
CADD<DATE>	Input of calibration date **Note:** The calibration date must be entered at the latest when "dAt?" is displayed. It can be changed subsequently at any time. The calibration date must consist of at least two figures, the maximum being four figures. The input of a decimal point is irrelevant. The first two figures are always combined (e.g. as month) and the last two (e.g. as year).
CARB<DATA>	Calibration range for basic calibration **Note:** The measurement range to be calibrated is not selected like in the measurement mode by input of a range number, but by entering the nominal calibration value. The URV5 then automatically selects the correct measurement range for calibration.

ManualsPlus.com

Command code	Function
CARG<NUMBER>	Measurement/calibration range **Note:** This command is used to set the calibration range for probe calibration, otherwise it only fixes the measurement range. * can be controlled by CAIA, CAIB.

4. Interface command

Command code	Function
CAQØ to CAQ3	SRQ off/on like in measurement mode.

5.Trigger commands

Command code	Function
CAL	Trigger command for a calibration measurement with subsequent storage of the calibration value (basic calibration of instrument) or trigger command for a probe calibration measurement (in this case the calibration value can be read by the controller).
CAX1	Trigger command for releasing a measured value for checking during calibration of the URV5.

ManualsPlus.com

6. Special commands: not applicable

7. Keyword

Command code	Function
CALEND	Keyword for switching from calibration to measurement mode. The commands for calibration become invalid.

8. Delimiters and separators: same as in measurement mode.

Universal commands in calibration mode

GET	is inhibited and not executed.
DCL SDC	Upon this command the URV5 returns from the calibration mode to the basic setting.
GTL	Upon this command the URV5 also leaves the calibration mode and changes to the measurement mode with local control.
LLO/SPE/SPD PPL	may be used without restriction, the instrument remaining in calibration mode.

Talk-only mode for calibration

In the calibration mode the key 6 LOCAL/TALK can also be used for data output.

After digital entry, key 6 will be evaluated as store key when it is actuated. A measured value for the purpose of checking can also be output to the listen-only device.

Table 2-23 ISO 7-bit code (ASCII code)

(SENT AND RECEIVED WITH ATN=1)

b_7 b_6 b_5 → / Bits b_4 b_3 b_2 b_1 ②		$0\ 0\ 0$	MSG ①	$0\ 0\ 1$	MSG	$0\ 1\ 0$	MSG	$0\ 1\ 1$	MSG	$1\ 0\ 0$	MSG	$1\ 0\ 1$	MSG	$1\ 1\ 0$	MSG	$1\ 1\ 1$	MSG
	COLUMN → / ROW ↓	0		1		2		3		4		5		6		7	
0 0 0 0	0	NUL		DLE		SP	MLA ASSIGNED TO DEVICE	0	MLA ASSIGNED TO DEVICE	@	MTA ASSIGNED TO DEVICE	P	MTA ASSIGNED TO DEVICE	`	MEANING DEFINED BY PCG CODE	p	MEANING DEFINED BY PCG CODE
0 0 0 1	1	SOH	GTL	DC1	LLO	!		1		A		Q		a		q	
0 0 1 0	2	STX		DC2		"		2		B		R		b		r	
0 0 1 1	3	ETX		DC3		#		3		C		S		c		s	
0 1 0 0	4	EOT	SDC	DC4	DCL	$		4		D		T		d		t	
0 1 0 1	5	ENQ	PPC③	NAK	PPU	%		5		E		U		e		u	
0 1 1 0	6	ACK		SYN		&		6		F		V		f		v	
0 1 1 1	7	BEL		ETB		'		7		G		W		g		w	
1 0 0 0	8	BS	GET	CAN	SPE	(		8		H		X		h		x	
1 0 0 1	9	HT	TCT	EM	SPD	)		9		I		Y		i		y	
1 0 1 0	10	LF		SUB		*		:		J		Z		j		z	
1 0 1 1	11	VT		ESC		+		;		K		[		k		{	
1 1 0 0	12	FF		FS		,		<		L		\		l		|	
1 1 0 1	13	CR		GS		-		=		M		]		m		}	
1 1 1 0	14	SO		RS		.		>		N		^		n		~	
1 1 1 1	15	SI		US		/		?	UNL	O		_		o		DEL	

ADDRESSED COMMAND GROUP (ACG)

UNIVERSAL COMMAND GROUP (UCG)

④

LISTEN ADDRESS GROUP (LAG)

TALK ADDRESS GROUP (TAG)

PRIMARY COMMAND GROUP (PCG)

SECONDARY COMMAND GROUP (SCG)

NOTES: ① MSG = INTERFACE MESSAGE

② b_1 = DIO1...b_7 = DIO7

③ REQUIRES SECONDARY COMMAND

④ DENSE SUBSET (COLUMN 2 THROUGH 5)

ManualsPlus.com

ManualsPlus.com

ManualsPlus.com

For **checking and calibrating the basic unit URV5** at regular intervals, it is recommended to use the **Service Kit UZ-8** (394.9968.02) for the URV5/NRV. The service kit permits **check, calibration and troubleshooting** for the analog board as well as the option DC output (URV5-B2) under computer control or via the keyboard. For this purpose, the service kit contains a special adapter for the analog board (instead of a measuring head) as well as two floppy disks with test and calibration software for the R&S controllers of the PCA family and for PPC and PUC. In addition, a DC voltage calibrator and a digital multimeter (UDS5) are required.

Due to a high calibration accuracy, **the calibration of measuring heads** for the URV5 can currently only be performed by the manufacturer.

With the aid of the performance tests described in the following the basic unit URV5 and the associated probes can be checked completely and rapidly by means of a few selected test points. Although in these tests the basic unit can only be checked in conjunction with certain measuring heads (and vice versa), separate sections with separate performance test reports are provided for the individual components, so that the user will have a better overview of the entire test sequence.

Checking of the frequency response of RF probes is intentionally not included. The test carried out (linearity, reflection coefficient) in fact ensure a correct frequency response and the test setup required would be too elaborate for the user. If these measurements are to be carried out, however, there are more detailed instructions in section 3.7.

Prior to the performance tests a warm-up period of at least 2 hours at the measurement temperature (18 to 28° C) should be allowed for the URV5. The ambient temperature should be between 20 and 25° C since in this range the measuring instruments used exhibit the smallest errors. Please take also care that the relative humidity does not exceed 80% and the AC supply voltage does not differ more than ±10% from the set nominal value.

ManualsPlus.com

3.1 Basic Unit URV5

3.1.1 Required Measuring Equipment and Accessories

Ref. No.	Designation	Required specifications	R&S Type	For use, see section
1	DC calibrator	1 V to 400 V ±0.01%		3.1.2.5
2	AC calibrator	200 µV to 10 V ±0.1% 100 kHz (200 kHz)		3.1.2.6
3	DC Probe URV5-Z1			3.1.2.4 3.1.2.5
4	RF Probe URV5-Z7 or 10-V Insertion Unit URV5-Z2			3.1.2.4 3.1.2.6
5	Waveform generator	Sinewave, sinewave burst 3 V_{pp}, 100 kHz		3.1.2.7
6	Controller with IEC-bus interface		PUC	3.1.2.3

ManualsPlus.com

3.1.2 Checking the Rated Specifications

3.1.2.1 Self-Testing

The URV5 is able to recognize and display certain malfunctions of the computer and of the analog board by means of an automatic performance test. This self-test is triggered when the instrument is switched on. It is however recommended to carry out this test also when the instrument is in operation. For this purpose the URV5 must be briefly switched off and on again.

If no error message appears on the display, no error has been detected during the self-test. Otherwise the fault can be located according to section 2.3.12.

3.1.2.2 Functional Check of Displays and Keyboard

The displays can be checked with the aid of special function Ø, i.e. after calling up this function all display elements and the keys must light for a few seconds.

Sequence of keys	IEC-bus command (PUC)
SHIFT	IECOUT 9, "SØ"
SPEC	
0	

For checking the keyboard all keys should be pressed in the sequence described in the following and the response of the URV5 be checked on the display. First remove the measuring heads from the instrument and switch the URV5 briefly off and on again.

ManualsPlus.com

Sequence of keys	Display			
		-----		V
SHIFT	REF	0.	0	V
1	REF	1.	0	V
2	REF	12.	0	V
3	REF	123.	0	V
4	REF	1234.	0	V
5	REF	12345.	0	V
EXP	REF	12345.	0	V
6	REF	12345.	6	V
CLEAR	REF	0.	0	V
7	REF	7.	0	V
8	REF	78.	0	V
9	REF	789.	0	V
./to	REF	789.	0	V
0	REF	789.0	0	V
+/-	REF	-789.0	0	V
DIM	REF	-789.0	0	W
STO	REF	Err		W
	REF	-789.0	0	W
INP	FRQ/Hz	-789.0	0	
SPEC		SPEC		

ManualsPlus.com

3.1.2.3 Checking the IEC-Bus Interface

For this check the response of the URV5 to a few selected IEC-bus commands is tested.

The following list contains a complete test program for the R&S Process Controller PUC in the left column, the response of the URV5 and readouts on the display in the centre column and a brief description of the individual test steps in the right column. The information contained in the table will enable the users of other controllers to write their own test program.

With the exception of test step 5, the URV5 may be set to any address. In the example described, "9" has been selected. For test step 5 the URV5 must be switched to TALK ONLY mode.

Prior to the test the probes must be removed from the basic unit and the URV5 be initialized (e.g. briefly switched off and on again). The delimiter of the controller must be set to "CR+NL".

ManualsPlus.com

Step No.	PUC test program	Response on URV5/PUC *	Description
1	100 IECLAD 9	REM lights	Addressing
	110 IECSDC	"HAllo" is displayed "HAllo" goes out "----- V" lights	Selected Device Clear
	120 IECUNL 130 STOP		Unaddressing
2	200 IECOUT 9, "Q1" 210 IECOUT 9, "X1" 220 IECIN 9, A$	SRQ lights	SRQ ON Trigger Output string in A$
	230 PRINT A$ 240 IECSRQ GOTO 270	URV5 NO PROBES *	Printout on display Branch instruction if SRQ is detected
	250 IECOUT 9, "QØ" 260 GOTO 300		SRQ OFF
	270 IECSPL 9, V% 280 PRINT V% 290 IECRETSRQ	SRQ goes out 104 *	Serial Poll Printout of SRQ byte Return instruction of SRO subroutine
	300 STOP		
3	400 IECTERM 1 410 IECOUT 9, "SØ";	All display elements light	Delimiter EOI Special function Ø
		REM lights "----- V" lights	
	420 IECTERM Ø 430 STOP		Delimiter CR+NL
4	500 IECOUT 9, "Q1" 510 IECLAD 9 520 IECGXT 530 IECUNL 540 IECIN 9, A$	SRQ lights	SRQ ON Addressing Group Execute Trigger Unaddressing Output string in A$
	550 PRINT A$ 560 IECSRQ GOTO 590	URV5 NO PROBES *	Printout on display Branch instruction if SRQ is detected

ManualsPlus.com

Step No.	PUC test program	Response on URV5/PUC *	Description
(4)	570 IECOUT 9, "QØ" 580 GOTO 620 590 IECSPL 9, V% 600 PRINT V% 610 IECRETSRQ 620 STOP	 SRQ goes out 104 *	SRQ OFF Serial Poll Printout of SRQ byte Return instruction of

For test step 5 the URV5 must be set to TALK ONLY mode.

Sequence of keys

LOCAL/TALK
SHIFT
SPEC
1
./to
STO

Step No.	PUC test program	Response on URV5/PUC *	Description
5	700 IEC←ERR 710 IEC$IN A$ 720 IF ST<>0 THEN 710 730 PRINT A$ 740 GOTO 710	 URV5 NO PROBES *	PUC programmed as listen-only device Read loop: Upon each pressing of LOCAL/TALK key the string shown in centre column is output on the display

ManualsPlus.com

3.1.2.4 Checking the Probe Interface

The co-functioning of the measuring heads and the basic unit can be checked by means of the following test. First set the URV5 to LOCAL mode by means of

key	IEC-bus command (PUC)
	IECLAD 9
LOCAL/TALK	IECGTL
	IECUNL

and remove both probes from the unit. ("-----" must appear on the display.)

For the check connect (any) probe to channel A. After a certain response time measured values should be read out on the display and key A must light. Remove the probe and check the display ("-----").

Repeat the test for channel B. With the probe inserted, key B must light.

3.1.2.5 Checking the Accuracy of DC Measurements

The output voltage of a DC calibrator is measured by the URV5 with the aid of a DC Probe URV5-Z1 (Fig. 3-1).

Settings on URV5:	Channel A	DC Probe URV5-Z1
	Channel B	---
	Readout	V
	Filter	F2
	Autorange	On

Settings on
DC calibrator: 0 V ±10 µV
±1 V/+10 V/+100 V/+400 V ±0.01%

The permissible tolerances for the indicated values are specified in the performance test report. Repeat the corresponding test steps for channel B.

ManualsPlus.com

3.1.2.6 Checking the Accuracy of AC Measurements

In the following tests the AC measurement accuracy of the basic unit URV5 is determined by measuring the output voltage of an AC calibrator with the aid of an RF Probe URV5-Z7 or a 10-V Insertion Unit URV5-Z2 (Fig. 3-2). Care should be taken that the interfering voltage of the AC calibrator determined by broadband measurement does not exceed 200 µV. Otherwise a divider or low-pass filter must be provided at the output of the calibrator. In this connection please refer also to section 2.3.2.2.1, where measurement of low RF voltages is described in detail.

Settings on URV5:	Channel A	URV5-Z7 (URV5-Z2)
	Channel B	----------
	Readout	V
	Filter	F2
	Autorange	on
Settings on AC calibrator:	0.2 mV	10 Hz

With this calibrator setting, zero adjustment of the URV5 is triggered first. Due to the low frequency, only the residual interfering voltage is measured and eliminated like an offset error.

After the zero adjustment the frequency is set to 100 kHz (200 kHz with RF probe) and the output voltage measured at the following values:

0.2 mV/10 mV/100 mV/1 V/10 V

The permissible tolerances for the indicated values are specified in the performance test report.

Repeat the corresponding test steps for channel B.

Please carry out the measurements in the stated sequence. After the measurement of high voltages the RF probes require a certain recovery time before low levels can be measured again.

ManualsPlus.com

3.1.2.7 Checking the PEAK (PEP) Function

In the following test the peak power of a keyed sinewave signal and the deviation from the continuous-wave power of the non-keyed signal are determined. The measurements can be carried out either with Probe URV5-Z7 or with the 10-V Insertion Unit URV5-Z2 (Fig. 3.3). The waveform generator must be able to produce sinewave bursts.

Settings on URV5:	Channel A	URV5-Z7 (URV5-Z2)
	Channel B	----------
	Readout	W (Δ dB)
	Z	50 Ω
	Filter	F2
	Autorange	on
	PEAK (PEP)	off

Settings on
waveform generator: Output signal sinewave (non-keyed)
Frequency 100 kHz

The displayed power is set to approx. 20 mW and is stored.

The waveform generator is then switched for sinewave bursts (pulse duration 2 ms, period 10 ms), the amplitude being kept constant, and the peak power is measured with the URV5 set to PEAK (PEP) function. The readout is switched to Δ dB.

Compare the deviation from the power of the non-keyed signals with the tolerances specified in the performance test report.

ManualsPlus.com

3.1.3 Performance Test Report

R&S
Millivoltmeter URV5
Ident No.: 394.8010.02
Serial No.: .....

Date: .....

Name: .....

Ref. No.	Characteristic	Measured to section	Min	Actual	Max	Unit
1	Self-test	3.1.2.1	--		--	
2	Functional check of displays and keyboard	3.1.2.2	--		--	
3	Checking the IEC-bus interface	3.1.2.3	--		--	
4	Checking the probe interface	3.1.2.4	--		--	
5	Checking the accuracy of DC measurements in channel A	3.1.2.5				
	0 V		-0.0005	.....	+0.0005	V
	+ 1 V		+0.9970	.....	+1.0030	V
	- 1 V		-0.9970	.....	-1.0030	V
	+ 10 V		+ 9.974	.....	+10.026	V
	+100 V		+ 99.74	.....	+100.26	V
	+400 V		+ 397.9	.....	+ 402.1	V

ManualsPlus.com

Ref. No.	Characteristic	Measured to section	Min	Actual	Max	Unit
6	Checking the accuracy of DC measurements in channel B	3.1.2.5				
	0 V		-0.0005	.....	+0.0005	V
	+ 1 V		+0.9970	.....	+1.0030	V
	- 1 V		-0.9970	.....	-1.0030	V
	+ 10 V		+ 9.974	.....	+10.026	V
	+100 V		+ 99.74	.....	+100.26	V
	+400 V		+ 397.9	.....	+ 402.1	V
7	Checking the accuracy of AC measurements in channel A	3.1.2.6				
	Zero adjustment		——	.....	——	
	0.2 mV		0.155	.....	0.245	mV
	10 mV		9.897	.....	10.103	mV
	100 mV 100 kHz (200 kHz)		98.97	.....	101.03	mV
	1 V		0.9897	.....	1.0103	V
	10 V		9.897	.....	10.103	V
8	Checking the accuracy of AC measurements in channel B	3.1.2.6				
	Zero adjustment		——	.....	——	
	0.2 mV		0.155	.....	0.245	mV
	10 mV		9.897	.....	10.103	mV
	100 mV 100 kHz (200 kHz)		98.97	.....	101.03	mV
	1 V		0.9897	.....	1.0103	V
	10 V		9.897	.....	10.103	V
9	Checking the PEAK (PEP) function	3.1.2.7	-0.05	.....	+0.05	ΔdB

ManualsPlus.com

3.2 RF Probe URV5-Z7

3.2.1 Required Measuring Equipment and Accessories

Ref. No.	Designation	Required specification	R&S Type	For use, see section
1	AC calibrator	200 µV to 10 V ±0.1% 200 kHz		3.2.2.1
2	Sinewave/waveform generator	1 V sinewave 10 MHz d < 1 %		3.2.2.2
3	20-dB divider for RF probe			3.2.2.2
4	BNC adapter for RF probe			3.2.2.1 3.2.2.2
5	Basic unit URV5			3.2.2.1 3.2.2.2

3.2.2 Checking the Rated Specifications

3.2.2.1 Checking the Linearity

In the following test the output voltage of an AC calibrator is measured at a frequency of 200 kHz with the aid of the RF probe (Fig. 3-2). Care should be taken that the interfering voltage of the AC calibrator determined by broadband measurement does not exceed 200 µV. Otherwise a divider or lowpass filter must be provided at the output. In this connection please refer also to section 2.3.2.2.1, where measurement of low RF voltages is described in detail.

Settings on URV5:	Channel A (B)	URV5-Z7
	Readout	V
	Filter	F2
	Autorange	on

ManualsPlus.com

Settings on AC calibrator:	0.2 mV	10 Hz

With this calibrator setting, zero adjustment is triggered if the RF probe is connected. Due to the low frequency, the voltage of 0.2 mV is not considered; only the residual interfering voltage is measured and eliminated like an offset error.

After the zero adjustment the frequency is set to 200 kHz and the output voltage measured at the following values:

0.2 mV; 3 mV; 10 mV; 30 mV; 100 mV; 0.3 V; 1 V; 3 V; 10 V

The permissible tolerances are specified in the performance test report. Please carry out the measurements in the stated sequence. After measurement of high voltages the RF probe requires a certain recovery time before low levels can be measured again.

3.2.2.2 Checking the Input Capacitance

The input capacitance of the RF probe has a considerable influence on the dividing error if a 20-/40-dB divider is used. To check the input capacitance, it is recommended to check the division ratio in conjunction with a 20-dB divider. The adjustment error of the divider is so minimal that it can be neglected with respect to the error caused by the input capacitance.

The output signal of a sinewave generator is measured first without and then with 20-dB divider (Fig. 3-4). The permissible division ratio is shown in the performance test report. The output voltage of the sinewave generator is adjusted to approximately 1 V_{rms}/10 MHz. Care should be taken that the distortion does not exceed 1% since otherwise weighting errors in the same order of magnitude will have to be expected.

Settings on URV5:	Channel A (B)	URV5-Z7
	Readout	V (X/REF)
	Filter	F2
	Autorange	on

The measurement is first to be carried out without divider, the measured value to be stored as reference value and the readout then be switched to X/REF for the measurement with divider.

ManualsPlus.com

3.2.3 Performance Test Report

R&S
RF Probe URV5-Z7
Ident No.: 395.2615.02
Serial No.: .....

Date: .....

Name: .....

Ref. No.	Characteristic	Measured to section	Min	Actual	Max	Unit
1	Checking the linearity	3.2.2.1				
	Zero adjustment		——	.....	——	
	0.2 mV		0.155	.....	0.245	mV
	3 mV		2.962	.....	3.038	mV
	10 mV		9.897	.....	10.103	mV
	30 mV		29.67	.....	30.33	mV
	100 mV 200 kHz		98.97	.....	101.03	mV
	0.3 V		0.2967	.....	0.3033	V
	1 V		0.9897	.....	1.0103	V
	3 V		2.967	.....	3.033	V
	10 V		9.897	.....	10.103	V
2	Checking the input capacitance	3.2.2.2	0.0890	.....	0.1110	X/REF

ManualsPlus.com

3.3 10-V Insertion Unit 50 Ω URV5-Z2

3.3.1 Required Measuring Equipment and Accessories

Ref. No.	Designation	Required specifications	R&S Type	For use, see section
1	AC calibrator	200 µV to 10 V ±0.1% 100 kHz		3.3.2.1
2	Basic unit URV5			3.3.2.1
3	Reflection coefficient test set	100 MHz to 2 GHz Directivity >46 dB	see 3.8	3.3.2.2
4	Termination 50 Ω N male	VSWR < 1.01 up to 2 GHz		3.3.2.2

3.3.2 Checking the Rated Specifications

3.3.2.1 Checking the Linearity

In the following test the output voltage of an AC calibrator is measured at 100 kHz with the aid of the 10-V insertion unit (Fig. 3-2). Care should be taken that the interfering voltage of the AC calibrator determined by broadband measurement does not exceed 200 µV. Otherwise a divider or lowpass filter must be provided at the output. In this connection please refer also to section 2.3.2.2.1, where measurement of low RF voltages is described in detail.

Settings on URV5:	Channel A (B)	URV5-Z2
	Readout	V
	Filter	F2
	Autorange	on
Settings on AC calibrator:	0.2 mV	10 Hz

With this calibrator setting, zero adjustment is triggered if the insertion unit is connected. Due to the low frequency, the voltage of 0.2 mV is not considered; only the residual interfering voltage is measured and eliminated like an offset error.

ManualsPlus.com

After the zero adjustment the frequency is set to 100 kHz and the output voltage measured at the following values:

0.2 mV; 3 mV; 10 mV; 30 mV; 100 mV; 0.3 V; 1 V; 3 V; 10 V

The permissible tolerances are specified in the performance test report. Please carry out the measurements in the stated sequence. After measurement of high voltages the insertion unit requires a certain recovery time before low levels can be measured again.

3.3.2.2 Checking the Reflection Coefficient

Linearity and reflection coefficient are characteristic data of the 10-V insertion unit. If both are within the specifications, the frequency response will also be within the specified tolerances.

For measuring the reflection coefficient any test set up to 2 GHz and a directivity of at least 46 dB will be suitable. The measurement level is uncritical, since it has only little influence on the reflection coefficient. The 10-V insertion unit to be tested is terminated at one end by 50 Ω for low reflection; for the measurement result it is irrelevant whether the insertion unit is connected to the basic unit or not. Care should be taken that the reflection coefficient of the 50-Ω termination does not exceed 0.5%.

The permissible reflection coefficient tolerances for the 10-V insertion unit are specified for 100 MHz to 2 GHz in the performance test report.
These tolerances do however **not** include the measurement error of the test set used. Please check first what reflection coefficients you can still measure with sufficient accuracy. The following example should be helpful. A test set with a directivity of 46 dB already yields an uncertainty of ±0.5%. Together with the reflection coefficient of the termination of 0.5%, the entire test set has a measurement error of ±1%. Therefore, only reflection coefficients > 3% can reliably be determined. Consequently, the reflection coefficient of the 10-V insertion unit can only be checked for frequencies above 500 MHz.

A test set for measuring the reflection coefficient up to 2 GHz and with a directivity of 46 dB is described in section 3.8. It contains the R&S VSWR Bridge ZRB2 and a URV5 with two RF probes.

ManualsPlus.com

3.3.3 Performance Test Report

R&S
10-V Insertion unit 50 Ω URV5-Z2
Ident No.: 395.1019.55
Serial No.: .....

Date: .....

Name: .....

Ref. No.	Characteristic	Measured to section	Min	Actual	Max	Unit
1	Checking the linearity	3.3.2.1				
	Zero adjustment		——	.....	——	
	0.2 mV		0.155	.....	0.245	mV
	3 mV		2.962	.....	3.038	mV
	10 mV		9.897	.....	10.103	mV
	30 mV		29.67	.....	30.33	mV
	100 mV 100 kHz		98.97	.....	101.03	mV
	0.3 V		0.2967	.....	0.3033	V
	1 V		0.9897	.....	1.0103	V
	3 V		2.967	.....	3.033	V
	10 V		9.897	.....	10.103	V
2	Checking the reflection coefficient	3.3.2.2				
	100 MHz *		--	.....	1	%
	200 MHz *		--	.....	1	%
	500 MHz *		--	.....	2	%
	1 GHz		--	.....	7	%
	1.6 GHz		--	.....	10	%
	2.0 GHz		--	.....	15	%

* Note measurement error!

ManualsPlus.com

3.4 100-V Insertion Unit 50 Ω URV5-Z4

3.4.1 Required Measuring Equipment and Accessories

Ref. No.	Designation	Required specifications	R&S Type	For use, see section
1	AC calibrator	2 mV to 10 V ±0.3% 1 MHz 100 V ±0.1% 200 kHz		3.4.2.1
2	Basic unit URV5			3.4.2.1
3	Reflection coefficient test set	100 MHz to 2 GHz Directivity > 46 dB	see 3.8	3.4.2.2
4	50-Ω termination N male	VSWR < 1.01 up to 2 GHz		3.4.2.2

ManualsPlus.com

3.4.2 Checking the Rated Specifications

3.4.2.1 Checking the Linearity

In the following test the output voltage of an AC calibrator is measured with the aid of the 100-V insertion unit from 2 mV to 10 V at 1 MHz and with 100 V at a frequency of 200 kHz (Fig. 3-2). The relatively low frequency of 200 kHz in the last measurement causes only a slight deterioration of the measuring accuracy, since the lower cutoff frequency of all AC probes strongly decreases with increasing voltage.

Although the 100-V insertion unit is less sensitive by a factor of 10 than the RF probe and the 10-V insertion unit, care should be taken when setting up the test set that broadband interferences will not invalidate the measurement results (see section 2.3.2.2.1).

Settings on URV5:	Channel A (B)	URV5-Z4
	Readout	V
	Filter	F2
	Autorange	on
Settings on AC calibrator:	2 mV	10 Hz

With this calibrator setting, zero adjustment is triggered if the insertion unit is connected. Due to the low frequency the voltage of 2 mV is not considered; only the residual interfering voltage is measured and eliminated like an offset error.

After the zero adjustment the frequency is set to 1 MHz and the output voltage measured at the following values:

2 mV; 30 mV; 100 mV; 0.3 V; 1 V; 3 V; 10 V

The measurement is then carried out at 100 V and 200 kHz. The permissible tolerances are entered in the performance test report. Please carry out the measurements in the stated sequence. After measurement of high voltages the insertion unit requires a certain recovery time before low levels can be measured again.

ManualsPlus.com

3.4.2.2 Checking the Reflection Coefficient

Linearity and reflection coefficient are characteristic data of the 100-V insertion unit. If both are within the specifications, the frequency response will also be within the specified tolerances.

Measurement of the reflection coefficient of the 100-V insertion unit is slightly critical, since 3% is not exceeded over the entire frequency range. The measurement must therefore be carried out particularly carefully. The test set used should have a directivity of at least 46 dB. The measurement level is uncritical, since it has practically no influence on the reflection coefficient. The insertion unit to be tested is terminated at one end by 50 Ω for low reflection; for the measurement result it is irrelevant whether the insertion unit is connected to the basic unit or not. Care should be taken that the reflection coefficient of the 50-Ω termination does not exceed 0.5%.

The permissible reflection coefficient tolerances for the 100-V insertion unit are specified for 100 MHz to 2 GHz in the performance test report. These tolerances do however not include the measurement error of the test set used. Please check first what reflection coefficients you can still measure with sufficient accuracy. The following example should prove to be helpful. A test set with a directivity of 46 dB yields already an uncertainty of ±0.5%. Together with the reflection coefficient of the termination of 0.5%, the entire test set has a measurement error of ±1%. Therefore, only reflection coefficients > 3% can reliably be determined. Consequently, the reflection coefficient of the 100-V insertion unit can only be checked for frequencies above 1 GHz.

A test set for measuring the reflection coefficient up to 2 GHz and with a directivity of 46 dB is described in section 3.8. It contains the R&S VSWR Bridge ZRB2 and a URV5 with two RF probes.

ManualsPlus.com

3.4.3 Performance Test Report

R&S
100-V Insertion Unit 50 Ω URV5-Z4
Ident No.: 395.1619.55
Serial No.: .....

Date: .....

Name: .....

Ref. No.	Characteristic	Measured to section	Min	Actual	Max	Unit
1	Checking the linearity	3.4.2.1				
	Zero adjustment		——	.....	——	
	2 mV		1.54	.....	2.46	mV
	30 mV		29.47	.....	30.53	mV
	100 mV		98.47	.....	101.53	mV
	0.3 V 1 MHz		0.2952	.....	0.3048	V
	1 V		0.9847	.....	1.0153	V
	3 V		2.952	.....	3.048	V
	10 V		9.847	.....	10.153	V
	100 V 200 kHz		98.47	.....	101.53	V
2	Checking the reflection coefficient	3.4.2.2				
	100 MHz *		--	.....	1	%
	200 MHz *		--	.....	1	%
	500 MHz *		--	.....	1	%
	1 GHz *		--	.....	2	%
	1.6 GHz		--	.....	3	%
	2.0 GHz		--	.....	3	%

* Note measurement error!

ManualsPlus.com

3.5 100-V Insertion Unit 75 Ω URV5-Z4

3.5.1 Required Measuring Equipment and Accessories

Ref. No.	Designation	Required specifications	R&S Type	For use, see section
1	AC calibrator	2 mV to 10 V ±0.3% 1 MHz 100 V ±0.1% 200 kHz		3.5.2.1
2	Basic unit URV5			3.5.2.1
3	Reflection coefficient test set	100 MHz to 2 GHz Directivity > 46 dB		3.5.2.2
4	75-Ω termination N male	VSWR < 1.01 up to 2 GHz		3.5.2.2

ManualsPlus.com

3.5.2 Checking the Rated Specifications

3.5.2.1 Checking the Linearity

In the following test the output voltage of an AC calibrator is measured with the aid of the 100-V insertion unit from 2 mV to 10 V at 1 MHz and with 100 V at a frequency of 200 kHz (Fig. 3-2). The relatively low frequency of 200 kHz in the last measurement causes only a slight deterioration of the measuring accuracy, since the lower cutoff frequency of all AC probes strongly decreases with increasing voltage.

Although the 100-V insertion unit is less sensitive by a factor of 10 than the RF probe and the 10-V insertion unit, care should be taken when setting up the test set that broadband interferences will not invalidate the measurement results (see section 2.3.2.2.1).

Settings on URV5:	Channel A (B)	URV5-Z4
	Readout	V
	Filter	F2
	Autorange	on
Settings on AC calibrator:	2 mV	10 Hz

With this calibrator setting, zero adjustment is triggered if the insertion unit is connected. Due to the low frequency the voltage of 2 mV is not considered; only the residual interfering voltage is measured and eliminated like an offset error.

After the zero adjustment the frequency is set to 1 MHz and the output voltage measured at the following values:

2 mV; 30 mV; 100 mV; 0.3 V; 1 V; 3 V; 10 V

The measurement is then carried out at 100 V and 200 kHz. The permissible tolerances are entered in the performance test report. Please carry out the measurements in the stated sequence. After measurement of high voltages the insertion unit requires a certain recovery time before low levels can be measured again.

ManualsPlus.com

3.5.2.2 Checking the Reflection Coefficient

Linearity and reflection coefficient are characteristic data of the 100-V insertion unit. If both are within the specifications, the frequency response will also be within the specified tolerances.

Measurement of the reflection coefficient of the 100-V insertion unit is slightly critical, since 5% is not exceeded over the entire frequency range. The measurement must therefore be carried out particularly carefully. The test set used should have a directivity of at least 46 dB. The measurement level is uncritical, since it has practically no influence on the reflection coefficient. The insertion unit to be tested is terminated at one end by 75 Ω for low reflection; for the measurement result it is irrelevant whether the insertion unit is connected to the basic unit or not. Care should be taken that the reflection coefficient of the 75-Ω termination does not exceed 0.5%.

The permissible reflection coefficient tolerances for the 100-V insertion unit are specified for 100 MHz to 2 GHz in the performance test report. These tolerances do however not include the measurement error of the test set used. Please check first what reflection coefficients you can still measure with sufficient accuracy. The following example should prove to be helpful. A test set with a directivity of 46 dB yields already an uncertainty of ±0.5%. Together with the reflection coefficient of the termination of 0.5%, the entire test set has a measurement error of ±1%. Therefore, only reflection coefficients > 3% can reliably be determined. Consequently, the reflection coefficient of the 100-V insertion unit can only be checked for frequencies above 1 GHz.

ManualsPlus.com

3.5.3 Performance Test Report

R&S
100-V Insertion Unit 75 Ω URV5-Z4
Ident No.: 395.1619.75
Serial No.: .....

Date: .....

Name: .....

Ref. No.	Characteristic	Measured to section	Min	Actual	Max	Unit
1	Checking the linearity	3.5.2.1				
	Zero adjustment		——	.....	——	
	2 mV		1.54	.....	2.46	mV
	30 mV		29.47	.....	30.53	mV
	100 mV		98.47	.....	101.53	mV
	0.3 V 1 MHz		0.2952	.....	0.3048	V
	1 V		0.9847	.....	1.0153	V
	3 V		2.952	.....	3.048	V
	10 V		9.847	.....	10.153	V
	100 V 200 kHz		98.47	.....	101.53	V
2	Checking the reflection coefficient	3.5.2.2				
	100 MHz *		--	.....	1.5	%
	200 MHz *		--	.....	1.5	%
	500 MHz *		--	.....	2	%
	1 GHz		--	.....	3	%
	1.6 GHz		--	.....	5	%
	2.0 GHz		--	.....	5	%

* Note measurement error!

ManualsPlus.com

3.6 DC Probe URV5-Z1

3.6.1 Required Measuring Equipment and Accessories

Ref. No.	Designation	Required specifications	R&S Type	For use, see section
1	DC calibrator	1 V to 400 V ±0.01%		3.6.2.1
2	Basic unit URV5			3.6.2.1

3.6.2 Checking the Rated Specifications

3.6.2.1 Checking the Measurement Accuracy

The output voltage of a DC calibrator is measured with the aid of the DC Probe URV5-Z1 (Fig. 3-1).

Settings on URV5:	Channel A (B)	URV5-Z1
	Readout	V
	Filter	F2
	Autorange	on

Settings on DC calibrator: 0 V ±10 µV
±1 V/+10 V/+100 V/+400 V ±0.01%

The permissible tolerances are specified in the performance test report.

ManualsPlus.com

3.6.3 Performance Test Report

R&S
DC Probe URV5-Z1
Ident No.: 395.0512.02
Serial No.: .....

Date: .....

Name: .....

Ref. No.	Characteristic	Measured to section	Min	Actual	Max	Unit
1	Checking the measurement accuracy	3.6.2.1				
	0 V		-0.0005	.....	+0.0005	V
	+ 1 V		+0.9970	.....	+1.0030	V
	- 1 V		-0.9970	.....	-1.0030	V
	+ 10 V		+ 9.974	.....	+10.026	V
	+100 V		+ 99.74	.....	+100.26	V
	+400 V		+ 397.9	.....	+ 402.1	V

ManualsPlus.com

3.7 Checking the Frequency Response of RF Probes

Due to the narrow tolerances of the RF probes, frequency response measurements are extremely difficult and should therefore only be carried out with suitable test sets.

Similar to power meters, all RF probes are calibrated to the rms value of the voltage corresponding to the incident power:

$$V = \sqrt{Z \times P_i}$$

The power P_i can be determined with the aid of corresponding test sets. The connections of the insertion units and of the probe for these measurements are shown in Fig. 3-5.

Since - unlike microwave power meters - all RF probes measure voltages, the following should be observed:

1. The reflection coefficient of the connected terminations (probes and insertion units) causes a measurement error of the same amount due to the VSWR on the test line. A reflection coefficient of 1% for instance causes a measurement error of ±1%.

2. The distortion of the test signal causes at higher voltages measurement errors of the same order of magnitude. This is due to the characteristic of the detector, which at high voltages provides for a peak evaluation of the input signal. Therefore, either a low-distortion generator (d < 0.5%) must be used for the frequency response measurements or the measurements be carried out at low level. With an input voltage of 30 mV_{rms} (300 mV_{rms} for the 100-V insertion units) this effect can be neglected.

ManualsPlus.com

3.8 Test Setup for Measurement of Reflection Coefficient

The URV5 and the VSWR Bridge ZRB2, Mod. 52, can be combined to form an accurate and low-priced test setup for measurement of reflection coefficients in the frequency range 10 MHz to 2 GHz (Fig. 3-6). Due to the high directivity of the VSWR bridge (> 46 dB), the measurement error for low reflection coefficients is only ±(0.5% + 10% of rdg). The test setup is therefore suitable for checking the reflection coefficient of URV5 probes from approximately 500 MHz and above. The output power of the sweep generator may be between 0 and +26 dBm.

In the test setup according to Fig. 3-6 the URV5 measures the ratio of reflected and incident power and reads out the result as reflection coefficient or return loss. The reflected power is determined by means of the power sensor in the main measurement channel (B in Fig. 3-6), the incident power by means of the 100-V insertion unit in the second channel. Since even with total reflection only part of the input power will be transmitted to the bridge output, the transmission loss must also be considered in the measurement. The transmission loss is 13 dB and almost independent of frequency. The transmission loss is entered as attenuation correction value +13 dB for the main measurement channel (section 2.3.5.3). In both channels the selected unit is V. In the relative readout mode X/REF the reflection coefficient is directly indicated (1% = 0.01), in the ΔdB mode the return loss (in dB). It is not recommended to determine the transmission loss by means of a short circuit or open circuit, since with reflection coefficients > 30% the VSWR at the bridge input and, hence, the measurement error strongly increases.

URV5 settings tabularized:

	Channel B	Channel A
Autorange	on	on
Unit	V	V
Measurement speed	F2	F2
Attenuation correction	+13 dB	------
Relative readout	ΔEXT X/REF (ΔdB)	

ManualsPlus.com

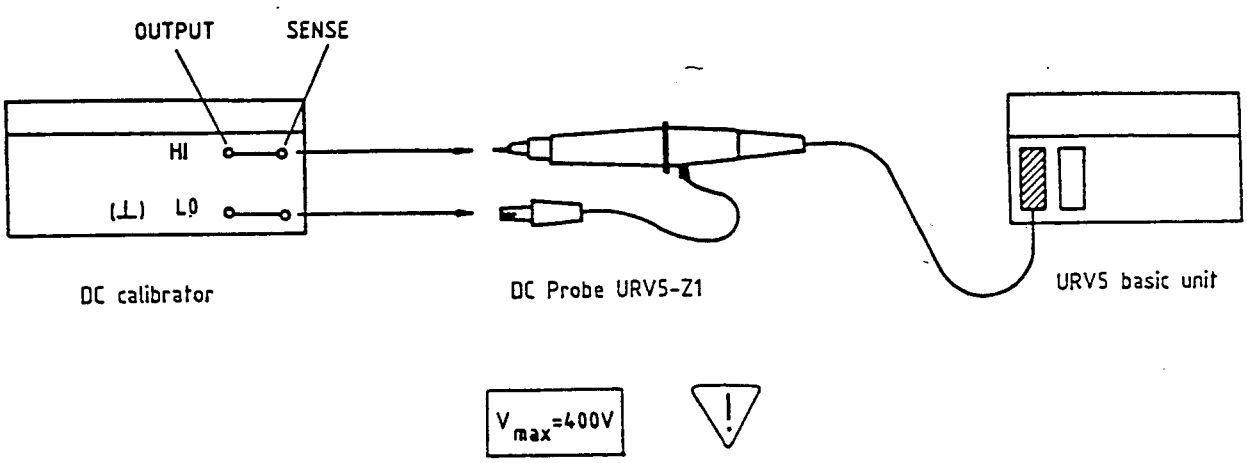

Fig. 3-1 Checking the DC measurement accuracy

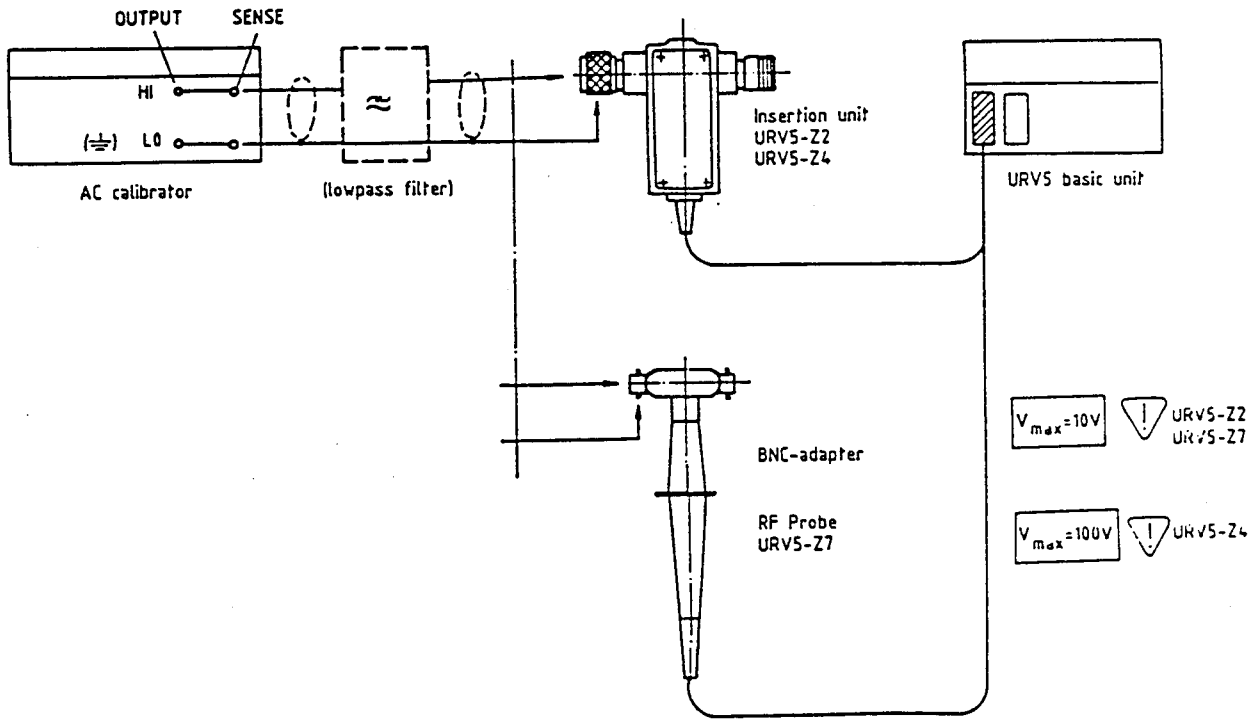

Fig. 3-2 Checking the AC measurement accuracy

ManualsPlus.com

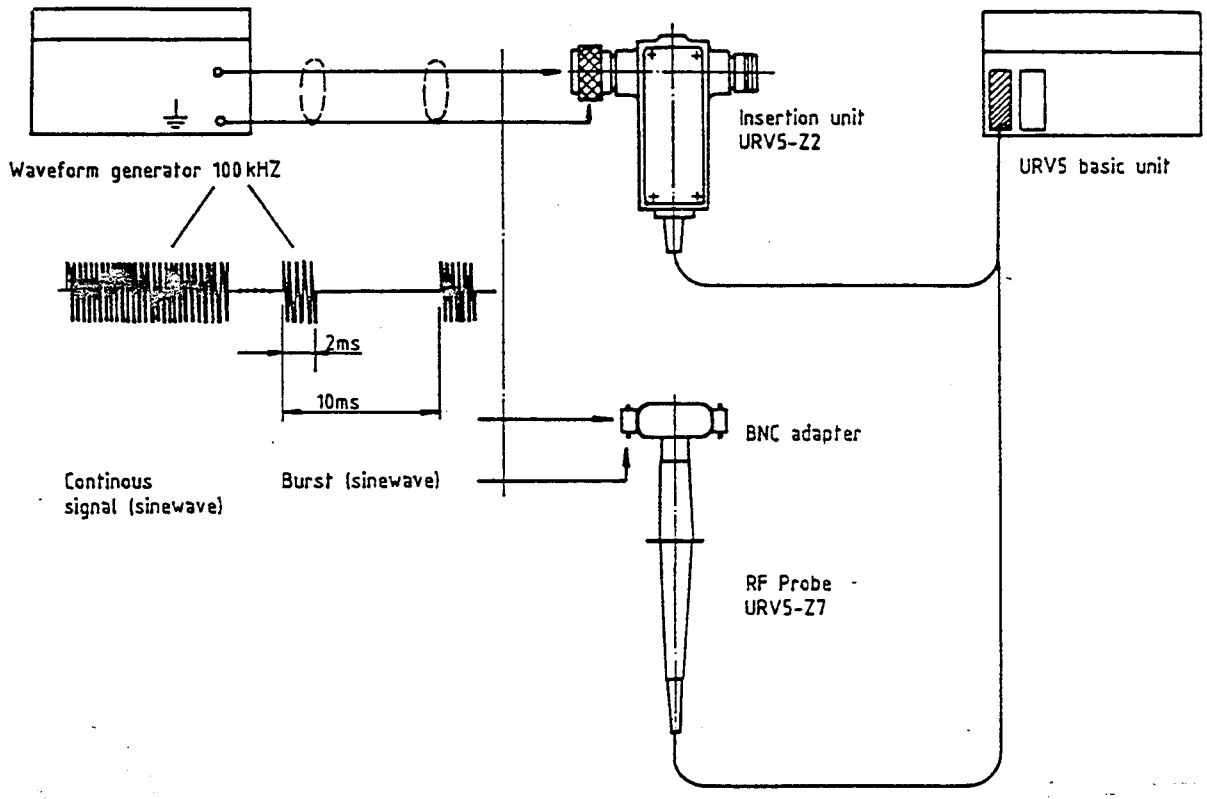

Fig. 3-3 Checking the PEAK (PEP) function

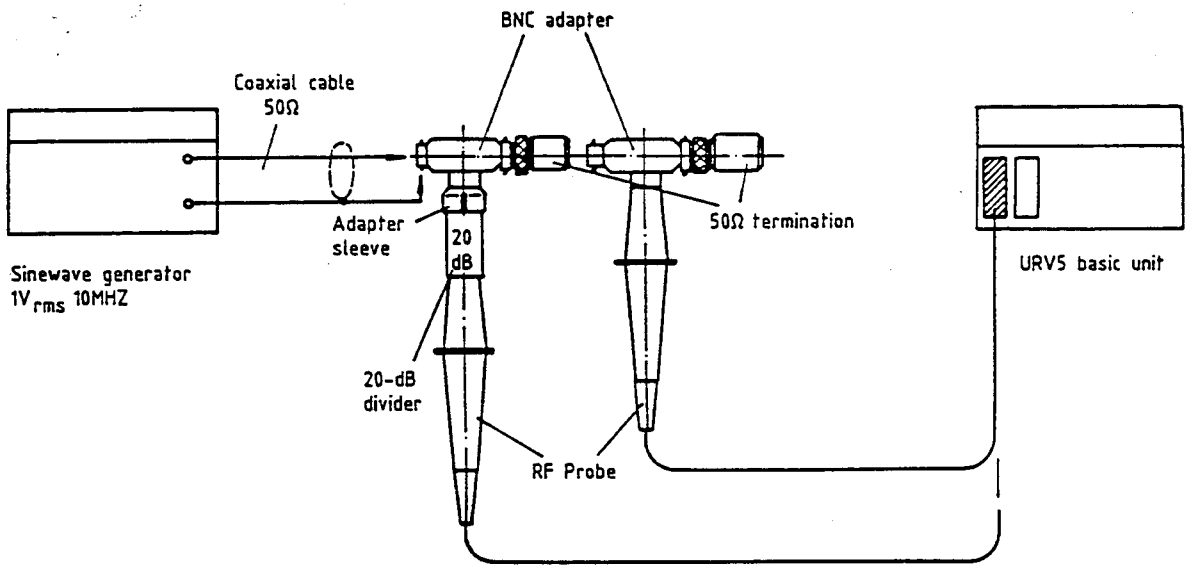

Fig. 3-4 Checking the input capacitance

ManualsPlus.com

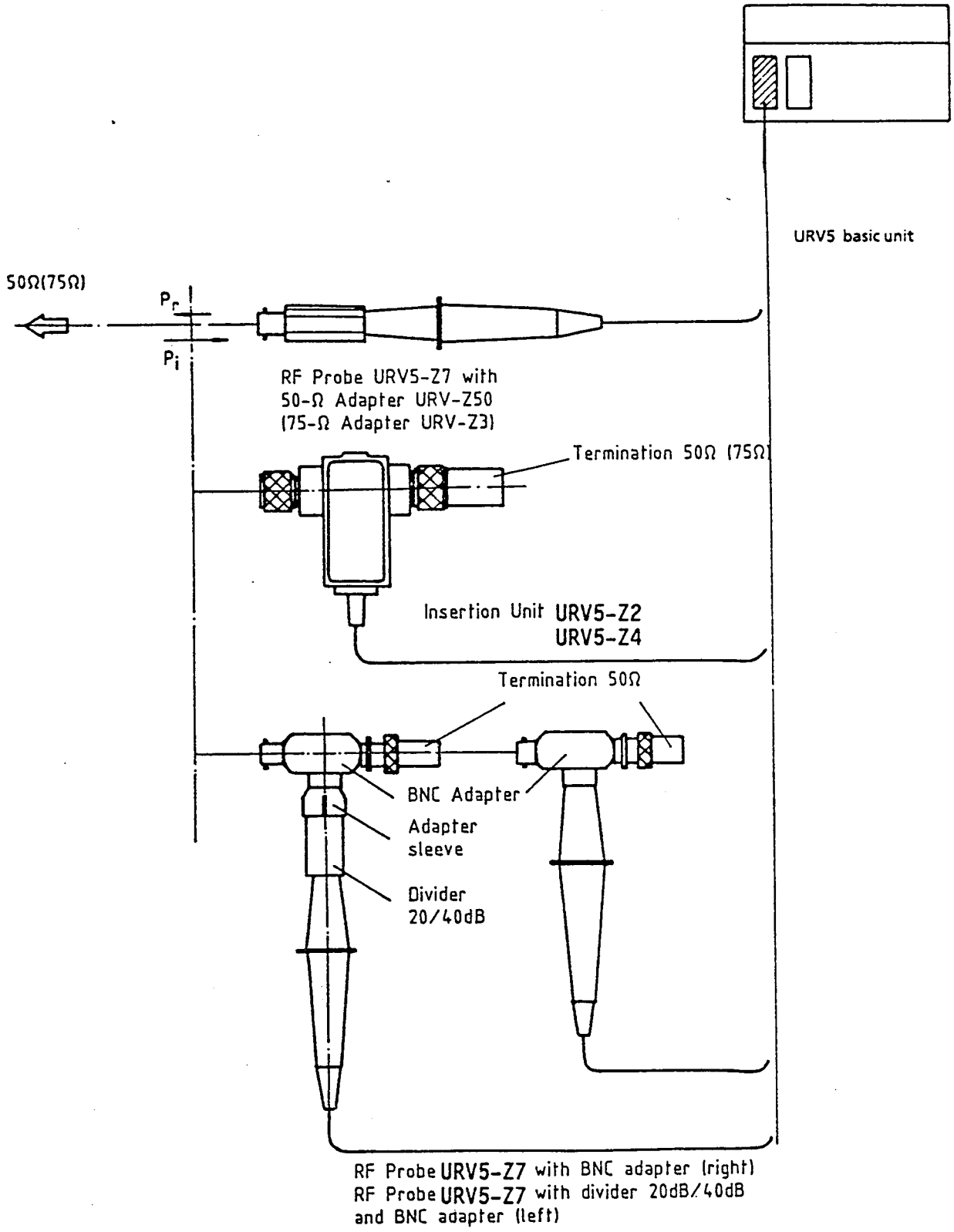

Fig. 3-5 Connection of RF probes for frequency response measurements

ManualsPlus.com

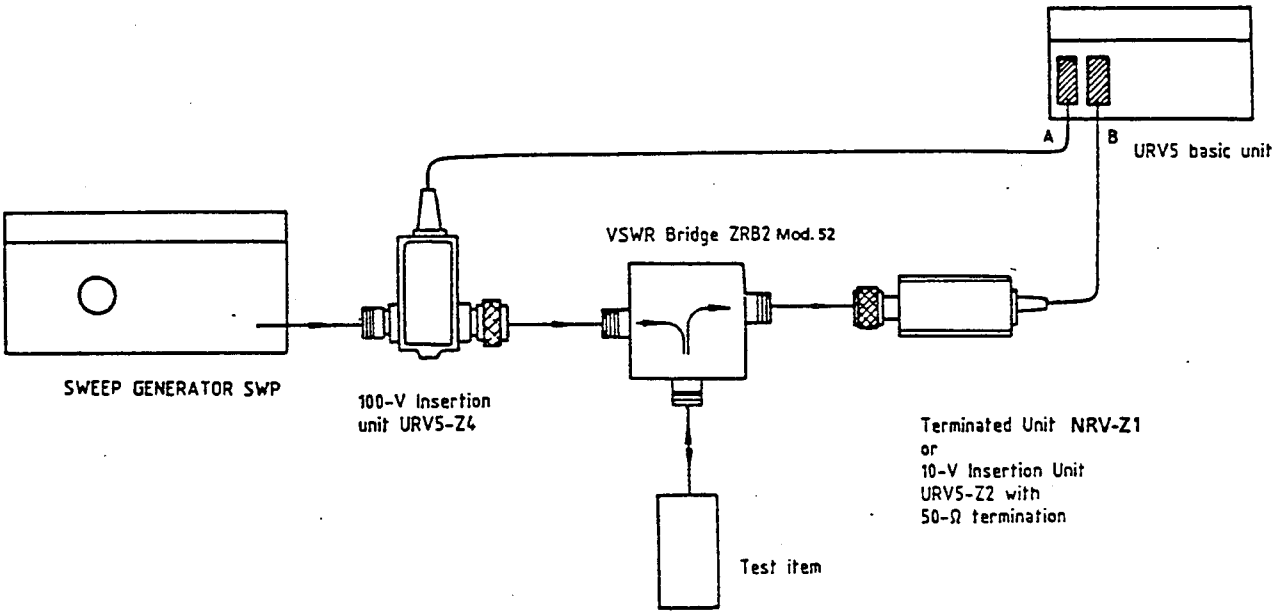

Fig. 3-6 Test setup for measurement of reflection coefficient

ManualsPlus.com

Note the remarks referring to the Service Kit UZ-8 in Section 3 Maintenance.

4.1 Circuit Description

The figures in parenthesis () refer to Fig. 4-1.

The URV5 consists of the basic unit with analog board, computer and display, plus one or two measuring heads. These may be allocated via the connector board either to channel A or B. Both channels can be set and read out independently of each other. The measurements are alternately carried out at intervals of 5 to 20 ms via an integrating A/D converter. The results are processed and filtered almost exclusively in the computer.

Since for reasons of reliability and serviceability neither the analog board nor the measuring heads contain any components that have to be adjusted, all tolerances are considered purely by calculation. The correction values for the analog board are stored in an EEPROM (43) of the computer, the characteristic data of the measuring head in an EPROM (52) which is integrated in the connector case of the measuring head.

4.1.1 Analog Board

(See Fig. 4-1 and circuit diagram 394.8610 S)

The analog board mainly consists of amplifiers for the two measuring heads, an A/D converter (25) preceded by a multiplexer (23), and a drive circuit for the analog switches and the data memories (52). All settings are made from the computer via an 8-bit optocoupler interface (34). The data transmission from the analog board to the computer is effected in purely serial form via a single optocoupler (33). Due to the multiplexer (26) preceding the A/D converter, either the result of the A/D conversion, the content of the data memories (52) or the status of the probe detector (27) can be transmitted. The probe detector contains a R/S flipflop for each of the two measurement channels, which is set by removing a probe from the URV5.

For AC voltage measurements with the RF probes, insertion units or power sensors two separate but completely identical DC voltage amplifiers are provided. This is to achieve a high crosstalk attenuation of modulated signals and a short switchover time between the two channels. For measurements with the DC probe a single amplifier is used for both channels. Switchover is effected by means of the multiplexer (10) which precedes the amplifier.

ManualsPlus.com

4.1.1.1 AC Probe Amplifiers A and B

In these two amplifiers the signal rectified in the probes is boosted so that it can be applied to the A/D converter. The output signal delivered from the probes is bipolar and referred to circuit ground. Due to the square-law characteristic of the rectifier at low input voltages the probe amplifiers must handle a dynamic range of the rectified voltage. For input voltages of 200 μV_{rms} to 10 V_{rms} (2 mV_{rms} to 100 V_{rms} for the 100-V insertion units) the output voltage of the probes is ±700 nV to ±14 V.

The amplifiers can be switch-selected in four steps corresponding to the measurement ranges 10 mV/100 mV/1 V/10 V (100 mV/1 V/10 V/100 V for 100-V insertion units). In the two most sensitive ranges the signal is not attenuated and applied to the meter amplifier (8, 18) where it is further boosted. In the other measurement ranges the signal is first attenuated by approx. 30 dB in the dividers (5, 6, 15, 16). The total gain is as follows:

Measurement range	10 (100) mV	0.1 (1) V	1 (10) V	10 (100) V
Divider	x1	x1	x0.0216	x0.0216
Amplifier	x476	x16	x57.2	x5.75
Total gain	x476	x16	x1.24	x0.124

The figures in parenthesis refer to the 100-V insertion units.

Switchover of the amplifiers is effected by means of the analog multiplexers D202/D302 and the FETs V205 to V212 or V305 to V312. For offset determination the two amplifier inputs in the two less sensitive measurement ranges are cyclically connected to ground via V208/V209 and V308/V309. In the other measurement ranges the polarities of the input voltage are cyclically interchanged with the aid of the FETs V205/V206/V211/V212 and V305/V306/V311/V312 and a bridge chopper is simulated by subtraction of successive measurement results.

The FETs V203/204 and V303/V304 limit the input signal for the multiplexer to max. ±2 V, without loading the rectifier circuit.

With the aid of the FETs V201/V202/V214 and V301/V302/V314 the discharge resistance for the rectifier of approx. 10 MΩ (R205 to R208, R305 to R308) can be reduced to approx. 0.5 MΩ. In particular at high input voltages, when the rectifier operates as peak-value meter, the measurement speed can thus considerably be increased. Prior to each measurement, the discharge circuit is actuated for a few ms in the measurement ranges 1 V and 10 V (10 V and 100 V).

ManualsPlus.com

The meter amplifier (8, 18) consists of a low-noise FET input stage (V218, V318) and a high-gain operational amplifier (N201, N301). The drain currents of V218/V318 are kept constant by N202I and N302I. In order to avoid a limitation of the dynamic range of the amplifier by too high offset voltages of V218/V318 in the most sensitive measurement range, the offset voltage can be adjusted via D203/D303 in 128 steps of 400 µV each. The adjustment is made when the instrument is switched on and follows the principle of successive approximation. In addition, the offset voltage is monitored during the measurement and - if necessary - corrected in steps up or down.

4.1.1.2 DC Probe Amplifier A/B

This subassembly operates in conjunction with the precision resistor of the DC probe (9 MΩ) as an inverting amplifier. The gain can be adjusted in four steps via D402:

Measurement range	1 V	10 V	100 V	400 V
Gain	3.33	0.333	0.0333	0.00333

Via the multiplexers D401 and D404 either channel A, channel B or circuit ground (via R403, R404) can be selected. The two non-used inputs are connected to ground with low impedance via R401/R402/R410. This is to achieve a high crosstalk attenuation between the two measurement channels. The offset is determined via R403/R404 in each measurement. With the aid of D403 the input current of the circuit can be adjusted in 128 steps accurately to ±10 pA. The adjustment is made when the instrument is switched on and follows the principle of successive approximation. In addition, the input current is monitored during the measurement and - if necessary - corrected in steps up or down. The input current can be calculated by the microprocessor from the difference of the offset voltages with different connection of the input. With one setting, the inverting input of N401 is connected to circuit ground via R403/R404 (9 MΩ), with the other via R423 (4.75 kΩ).

ManualsPlus.com

4.1.1.3 Peak-value Meter

This PC board enables in conjunction with the AC probes peak-value measurement of modulated or pulsed RF signals (PEAK). The circuit consists of the input buffer N501I, AGC amplifier N502, holding capacitor C501, output buffer V505/N501II and MOSFET V504. With a blocked channel, V504 acts like a diode with low leakage current and charges C501 up to the peak value of the input signal. With conductive channel, V504 acts as an ohmic resistance of approx. 200 Ω and the entire circuit operates as a buffer between multiplexer D501 and A/D converter.

4.1.1.4 A/D Converter

This PC board consists of the pulse-width modulator (N506, N507, D502) and the counting and evaluation logic circuit (D511). The A/D conversion is effected so that first the input DC voltage (X502.2) is converted into a pulse-modulated squarewave signal (X507.3) whose pulse width is measured in the counting circuit. The counting clock is 4.096 MHz. The pulse-modulated signal is the result of a control process, in the course of which the mark-to-space ratio is varied until the sum of currents at the inverting input of N506 is reduced to zero. N506 is used as an integrator and three currents are applied to its inverting input:

1. Input current (R513), a linear function of the input DC voltage.

2. Reference pulse current (R515), proportional to the reference voltage (X507.1) and to the mark-to-space ratio of the pulse-modulated squarewave signal.

3. Drive current 4 kHz (R516) for generation of a triangular output signal (X507.2).

As long as the arithmetical mean of the sum of the three currents is not zero, the triangular output signal is shifted in positive or negative direction and the time interval between the zero-axis crossings of this signal is thus varied. The comparator N507, which detects these zero-axis crossings, thus varies the mark-to-space ratio of its output signal. After synchronization to the counting clock this output signal is the above pulse-modulated squarewave signal, which now in turn varies the reference pulse current via D502 so that the mean input current of the integrator disappears. As soon as an unbalance is obtained due to the variation of the input voltage, the mark-to-space ratio will be varied until the reference pulse current again compensates the input current.

The integration time of the A/D converter can be adjusted in steps of 250 µs and is selected as a function of the desired resolution or measurement speed. The whole process is controlled by the microprocessor which reads in the measurement result in serial form via the optocoupler (33).

ManualsPlus.com

4.1.1.5 Analog Switch Decoder (30)

The status of each analog switch is stored in an addressable latch (D101 to D104, D203, D303, D403). If there is a change, the corresponding switch will be addressed via the lines AØ to A5. The required status is transmitted via A6. The status is entered into the latch by a brief logic H pulse on the SOD line. The input $\overline{G}$ (Enable) of the corresponding chip is thus activated via the 1-out-of-8 decoder D105.

A few control inputs of the A/D converter are directly controlled via the address lines.

4.1.2 Computer (33, ..., 44, 48, 58)

(See Fig. 4-1 and circuit diagram 349.1910 S)

The core is a CPU of Type 8085 with the following addressable chips:

Symbol	Designation	Address range
D5	EPROM 32k	ØØØØ to 7FFF H
D6	no chip implemented	
D32	RAM 4k (8k chip)	8ØØØ to 8FFF H
D11	IEC-bus chip	9ØØØ to 9ØØ7 H
D2	Output port analog board	AØØØ
D4	Display chip	BØØØ to BØØ1 H
D8	EPROM 2k	CØØØ to C7FF H
	Analog output	DØØ1H, DØØ2 H

"Chip select" is effected via the decoders D25 or D30/D31. Chip D3 operates as address latch for the least-significant byte.

The interrupt inputs of the microprocessor are connected as follows:

Symbol	Chip
RST5.5	Display chip
RST6.5	IEC-bus chip
RST7.5	IEC-bus chip (activated when GXT is received)
TRAP	Timer D4/D22 (balanced squarewave signal 2 Hz)

ManualsPlus.com

For writing into the EEPROM a programming pulse of 12 ms duration is produced in the monoflop D21. For the duration of the programming pulse the program run is inhibited via the READY input of the CPU.

The optocoupler interface is driven via the port D2 and the SOD output of the CPU. The data transmitted from the analog board to the computer are read into the SID input of the microprocessor in serial form.

4.1.3 Power Supply (35, 38, 48, 58)

(See Fig. 4-1 and circuit diagram 349.1910 S, Bl. 2)

The following supply voltages are generated for the URV5:

Voltage	Test point	Use
+5 V	X11	Power supply for computer/display
+5 V	X12	Power supply for analog board (digital section)
+15 V	X13	" " "
-15 V	X14	" " "

The supply voltages for the analog board and the computer are referred to safety ground potential.

When the instrument is switched on, the reset circuit V10/D20 furnishes a reset pulse (active L) of approx. 120 ms duration.

4.1.4 DC-Output (Option URV5-B2)

(See Fig. 4-1 and circuit diagram 395.0112 S)

This module contains a 12-bit D/A converter which is cyclically controlled via the address/data bus in step with the rate of the display. The 12-bit information is composed as follows:

Bits 1 to 4 are derived via latch D2 from the four least-significant bits of the address word, bits 5 to 12 are identical with the data word transmitted via the lines ADØ to AD7 (latch D3).

The output voltage range is -2.048 to +2.047 V. The adjustment via R5 and R9 is described in the service kit UZ-8.

The supply voltage of ±15 V for the D/A converter is derived from the 5-V supply for the computer via a DC/DC converter (D5, V7, V8, Z1) and via the two voltage stabilizers N1 and N2.

ManualsPlus.com

4.1.5 Measuring Heads

(See Fig. 4-1 and circuit diagrams 395.0512 S, 395.2680 S, 395.1019 S and 395.1619 S)

The 12-way connector of each measuring head contains a data memory, in which all characteristics and correction values required for the measurement are stored. The data are read out either when the instrument is switched on or when a probe is exchanged. For this purpose the data memory is first connected to the 5-V supply of the analog board via relay K101 and its content is then read out in serial form. The EPROM D12 is addressed via the two cascaded counters D11 and D10 by increasing the address by one after every 8 clock pulses. The parallel-serial conversion of the addressed 8-bit word is effected in the multiplexer D13 which upon each clock pulse (X10.7) addresses the next higher bit. The two counters D10/D11 are reset by logic H via X10.9 at the beginning of the read-out process. The "chip enable" for the EPROM D12 (logic L) is also effected via X10.9. The data memories are driven by the addressable latch D101 on the analog board. The clock pulses are jointly produced for both probes (D101.10), reset/chip enable separately, i.e. for channel A at terminal D101.9, for channel B at terminal D101.11. The outputs of the data memories are taken separately for the two channels to the multiplexer (26) (D508).

With the aid of the probe detector (27) it is possible to recognize whether a probe has been inserted in the basic unit or removed from it. The probe detector basically consists of an R/S flipflop for each of the channels A and B, which with non-operative channel is set by the corresponding pull-up resistor (R523, R524). With a probe inserted, the set input is kept at logic L level via the resistor R13 (data memory).

4.1.5.1 RF Probe URV5-Z7

The RF probe is made up of a full-wave rectifier which is capacitively coupled to the test input and supplies two rectified voltages of the same amount but with opposite polarity. The rectified voltages are further boosted in the basic unit by the probe amplifiers A or B. In order to compensate for the relatively strong temperature-dependence of the rectifier diodes, the temperature is measured in the vicinity of the rectifier diodes by means of the sensor V3 and is then considered in the microprocessor calculations. V3 acts like a Zener diode with temperature-dependent break-down voltage and is cyclically switched on only for a few milliseconds (N503.2) in order to minimize errors caused by selfheating.

ManualsPlus.com

4.1.5.1.1 20-/40-dB Dividers

The dividers that can be plugged onto the probe tip form in conjunction with the input capacitance of the probe a capacitive divider. Due to the greater base capacitance the 40-dB divider can already be used at 500 kHz, whereas the 20-dB divider can only be used at 1 MHz and above. The dividers are preferrably used for measuring high voltages or for measurements with low load capacitance. The input capacitance of the probe with 40-dB divider is 0.5 pF only, with 20-dB divider it is 1 pF. (this is without BNC adapter).

4.1.5.1.2 50-/75-Ω Adapters

With the aid of the two adapters and the RF probe, low-reflection RF voltage measurements can be carried out in 50-/75-Ω systems. The adapters contain a 50-/75-Ω termination which is connected to the inner and outer conductor and to which the probe tip is connected via matching pads. The reflection coefficients specified for the adapters are only valid with the probe inserted.

4.1.5.2 10-V Insertion Unit URV5-Z2

This measuring head is of similar design as the RF probe. It mainly differs in the greater frequency range. The lower measurement limit is reduced to approx. 9 kHz by the coupling capacitance of 10 nF.

4.1.5.3 100-V Insertion Units URV5-Z4

In these measuring heads a capacitive divider designed as tubular divider is connected ahead of the rectifier. Due to the low base capacitance resulting from the circuit design, the lower frequency limit is higher than for the probe and 10-V insertion unit.

4.1.5.4 DC Probe URV5-Z1

The DC probe contains a 9-MΩ precision resistor as input resistance for the inverting amplifier (20).

ManualsPlus.com

4.2 Mechanical Construction

The URV5 is housed in a compact R&S cabinet and easy to service. Quick access to all PC boards is ensured.

Analog Board

After removing the lower instrument cover (4 Phillips screws) and the screen cover the component side of the analog board is accessible. To remove the screen cover, which simply rests in the screen walls at both sides, pull the cover first outwards and then up (by putting two fingers into the holes provided).

When the analog board is swung out the wiring side becomes also accessible. To do this, first remove the multi-way connector from the input and loosen the two Phillips screws (at the end looking toward the frontpanel). Now the board can be swung out. The lower screen cover can be removed after undoing the centre Phillips screw.

Processor (+ IEC-bus interface + power supply)

The component side of the PC board is accessible after the upper instrument cover has been removed (four Phillips screws). The soldered side can only be reached after removing the PC board itself. To do this withdraw the multi-way connectors from the analog board and the display, and the connectors from the power transformer and the voltage selector (at the rear). Now loosen the computer board from the subchassis (two Phillips screws) and from the rear panel (2 hex-head screws, spanner width 9/32)

Display

Remove the upper and lower instrument covers after loosening each time 4 Phillips screws, withdraw the multi-way connectors from the display to the processor and the analog board. Remove the front panel by loosening the four Phillips screws from the two side profiles. Remove display board from the front panel (4 Phillips screws).

Power transformer + power switch + voltage selector/fuse holder/ line filter + 5-V stabilizer

are located at the rear panel and fixed for easy access by screws or snap catches.

DC Output (option URV5-B2)

The subassembly is snapped on to the processor board and can simply be demounted.