ManualsPlus.com

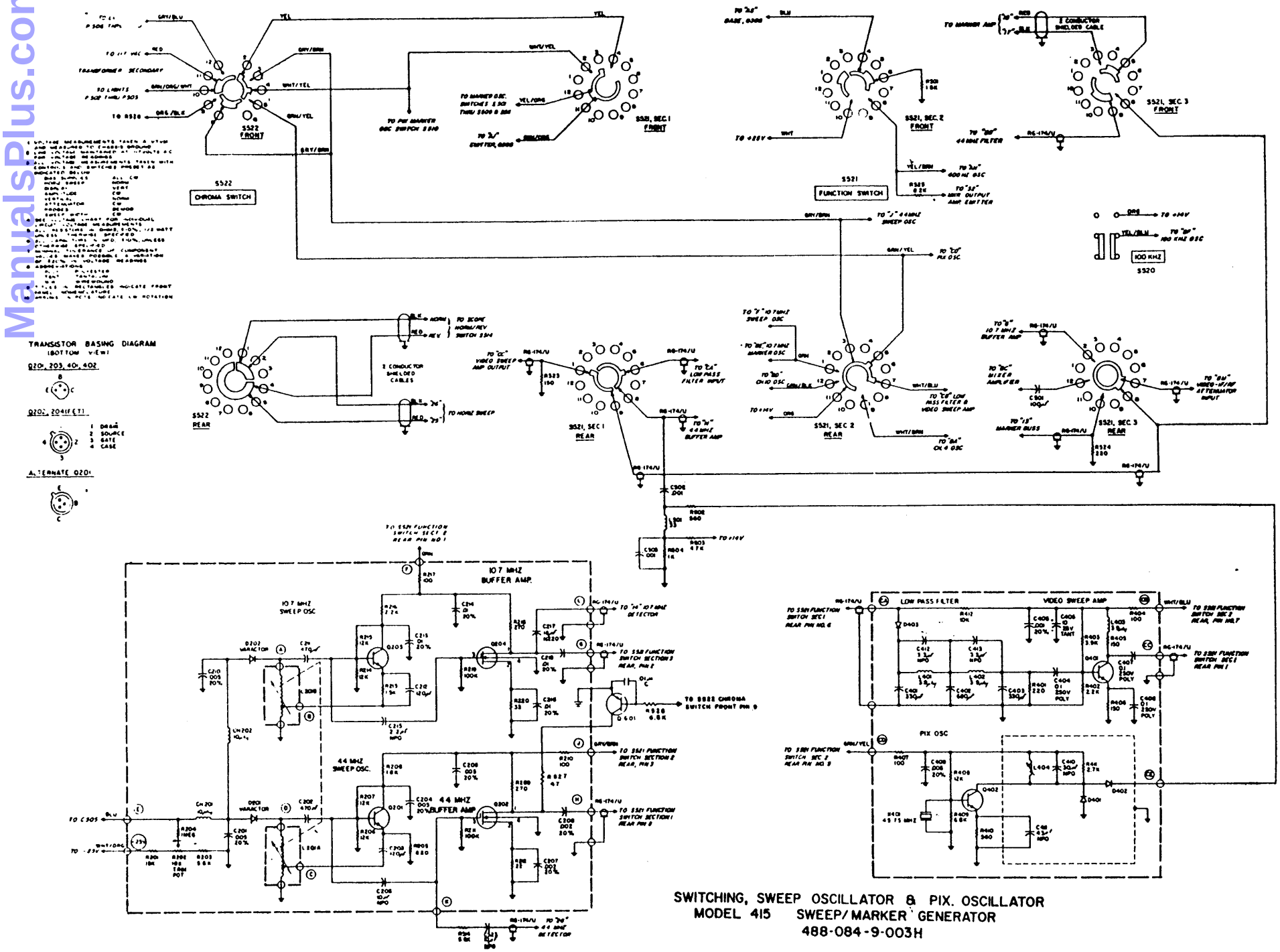

SWITCHING, SWEEP OSCILLATOR & PIX. OSCILLATOR
MODEL 415 SWEEP/MARKER GENERATOR
488-084-9-003H