ManualsPlus.com

**B+K PRECISION**

# MODEL 470 CRT TESTER/ REJUVENATOR

488-144-9-001F

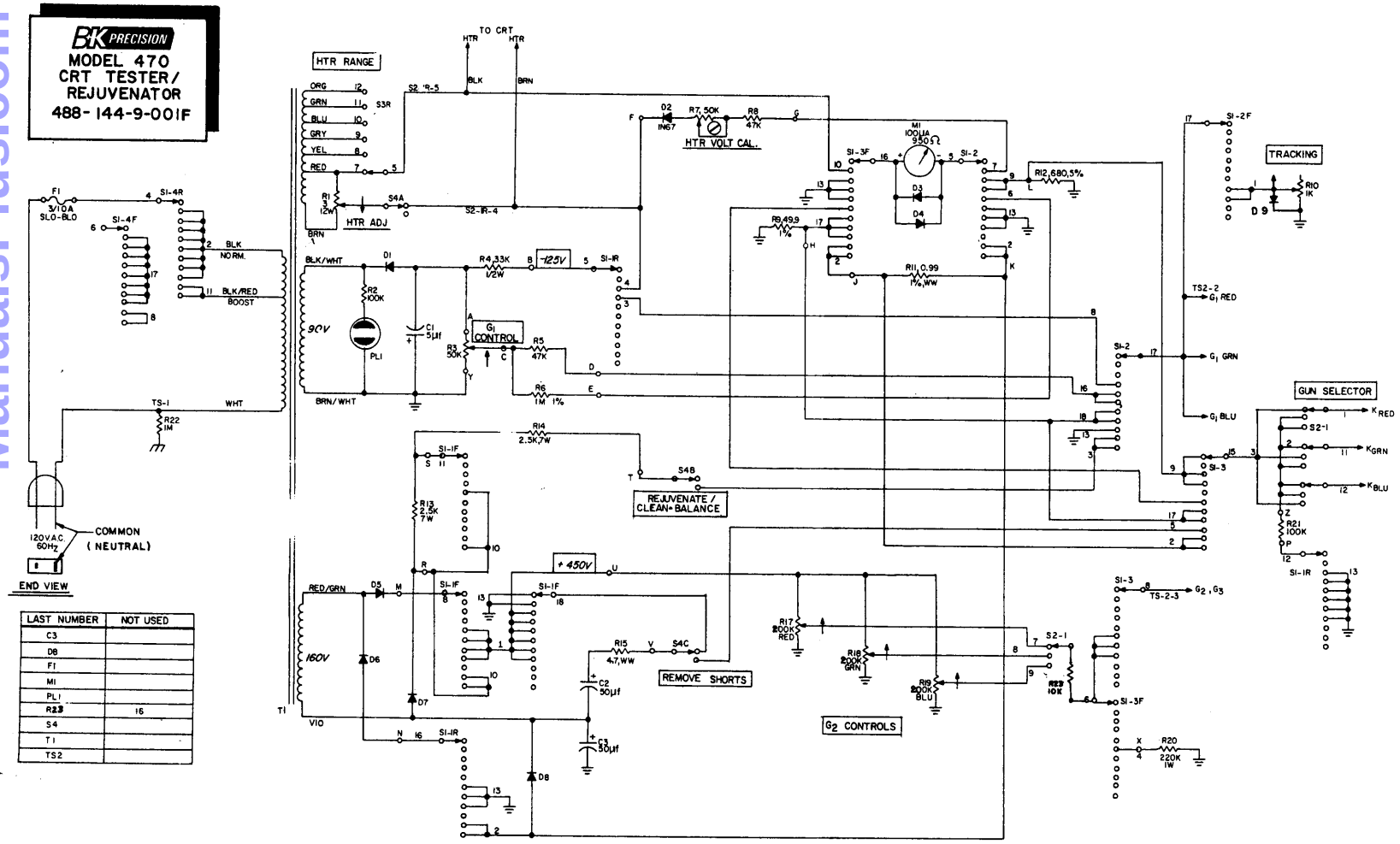


| LAST NUMBER | NOT USED |
|---|---|
| C3 | |
| D8 | |
| F1 | |
| M1 | |
| PL1 | |
| R23 | 16 |
| S4 | |
| T1 | |
| TS2 | |

| OUTPUT CABLE | | |
|---|---|---|
| WIRE COLOR | FUNCTION | PIN NO. |
| BLK | HTR | 1 |
| BRN | HTR | 2 |
| GRY | $G_1$ RED | 3 |
| TAN | $G_1$ GRN | 4 |
| PUR | $G_1$ BLU | 5 |
| RED | K RED | 6 |
| GRN | K GRN | 7 |
| BLU | K BLU | 8 |
| ORG | $G_2$ RED | 9 |
| YEL | $G_2$ GRN | 10 |
| PINK | $G_2$ BLU | 11 |
| WHT | $G_3/G_4$ | 12 |

| FUNCTION | | FUNCTION |
|---|---|---|
| S1= | 1 | POWER OFF |
| | 2 | SET HEATER |
| | 3 | HTR LEAKAGE |
| | 4 | $G_1$ LEAKAGE |
| | 5 | SET $G_1$ VOLTAGE |
| | 6 | SET $G_2$ CUTOFF VOLTAGE |
| | 7 | READ EMISSION |
| | 8 | SET COLOR TRACKING |
| | 9 | REMOVE SHORTS |
| | 10 | CLEAN+BALANCE |
| | 11 | REJUVENATE |
| S2= | 1 | RED/BBW |
| | 2 | GREEN |
| | 3 | BLUE |
| S3= | 1 | 0-4 |
| | 2 | 4-7 |
| | 3 | 7-9 |
| | 4 | 8-11 |
| | 5 | 10-12 |
| | 6 | 12-14 |
| S4= | | REMOVE SHORTS<br>CLEAN+BALANCE<br>REJUVENATE |

NOTES:
UNLESS OTHERWISE SPECIFIED
1. ALL RESISTORS 1/2W, 10%.
2. ALL DIODES 1A, 600V.
3. ARROWS ON POT. WIPERS INDICATE DIRECTION OF CLOCKWISE ROTATION.
4. SCHEMATIC IS SUBJECT TO CHANGE WITHOUT NOTICE.

⏚ CIRCUIT COMMON
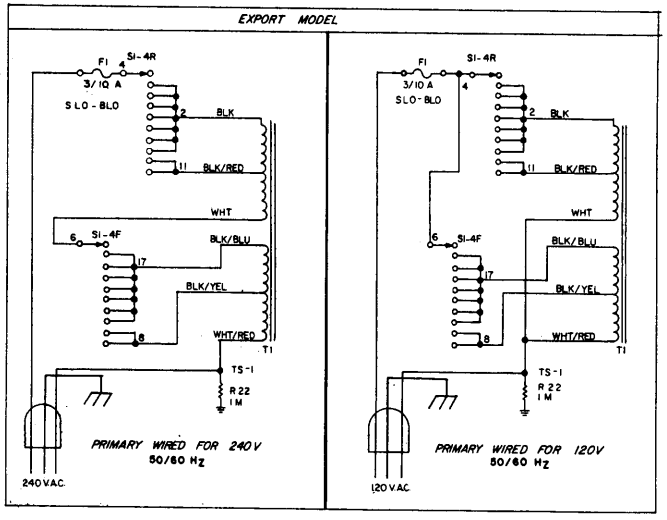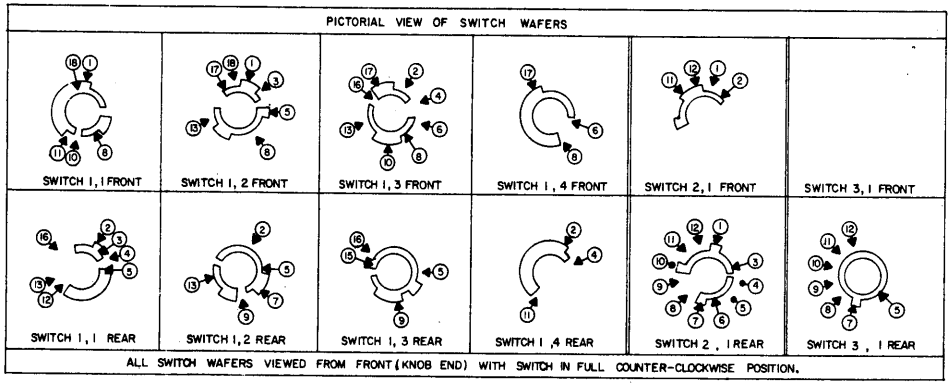
⏚ CHASSIS CONNECTION