ManualsPlus.com

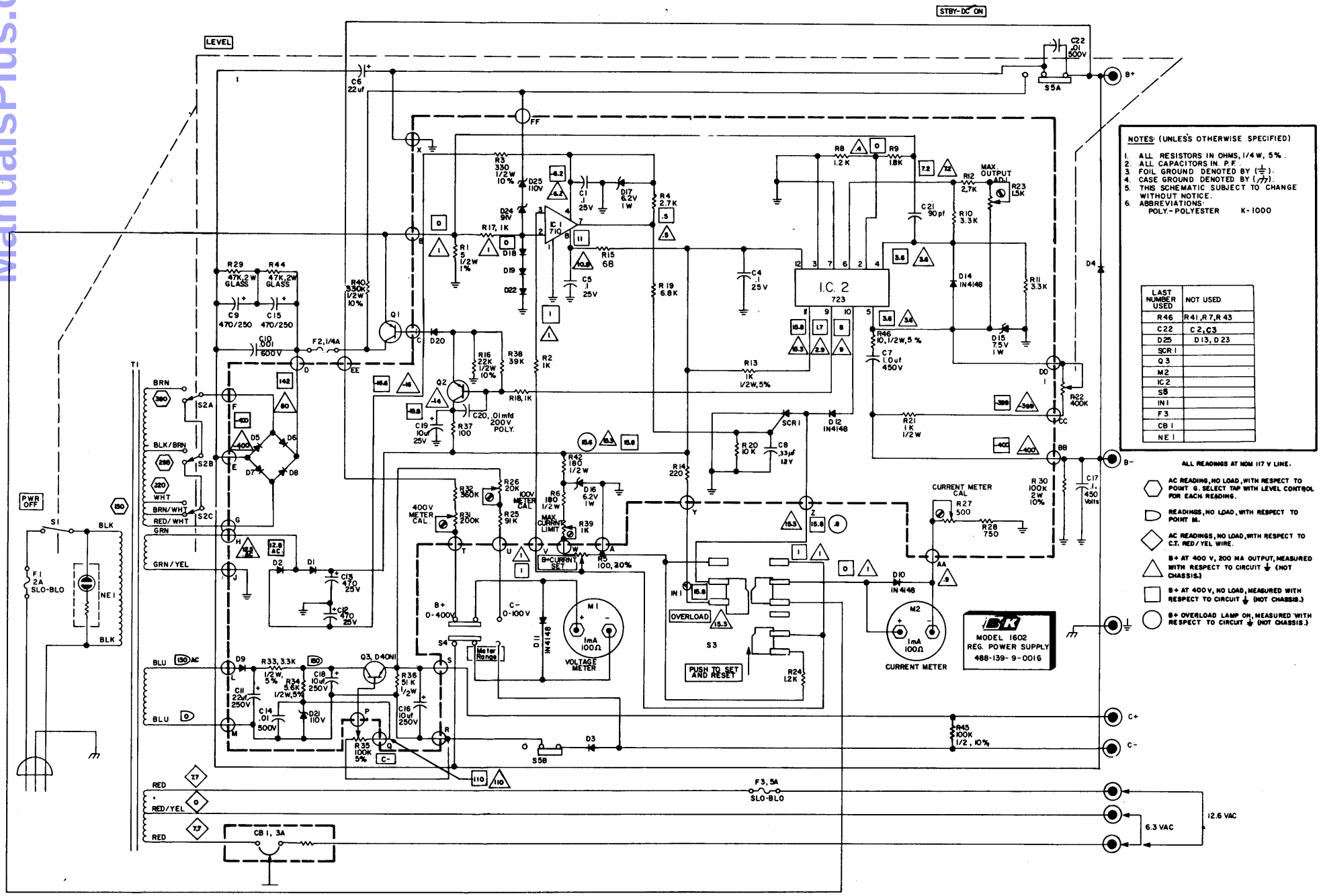

NOTES: (UNLESS OTHERWISE SPECIFIED)

1. ALL RESISTORS IN OHMS, 1/4 W, 5%.
2. ALL CAPACITORS IN P.F.
3. FOIL GROUND DENOTED BY (⏚).
4. CASE GROUND DENOTED BY (⏚).
5. THIS SCHEMATIC SUBJECT TO CHANGE WITHOUT NOTICE.
6. ABBREVIATIONS: POLY.-POLYESTER K-1000

LAST NUMBER USED	NOT USED
R46	R41, R7, R43
C22	C2, C3
D25	D13, D23
SCR1	
Q3	
M2	
IC2	
S5	
IN1	
F3	
CB1	
NE1	

ALL READINGS AT NOM 117 V LINE.

- ⬡ AC READING, NO LOAD, WITH RESPECT TO POINT G. SELECT TAP WITH LEVEL CONTROL FOR EACH READING.
- ⬭ READINGS, NO LOAD, WITH RESPECT TO POINT M.
- ◇ AC READINGS, NO LOAD, WITH RESPECT TO C.T. RED/YEL WIRE.
- △ B+ AT 400 V, 200 MA OUTPUT, MEASURED WITH RESPECT TO CIRCUIT ⏚ (NOT CHASSIS.)
- □ B+ AT 400 V, NO LOAD, MEASURED WITH RESPECT TO CIRCUIT ⏚ (NOT CHASSIS.)
- ○ B+ OVERLOAD LAMP ON, MEASURED WITH RESPECT TO CIRCUIT ⏚ (NOT CHASSIS.)