ManualsPlus.com

BK PRECISION®

Instruction Manual

Model 2880A/2890 Multi-display Multimeter

ManualsPlus.com

Limited Three Year Warranty

B&K Precision Corp. warrants to original purchaser that its product and the component parts thereof, will be free from defects in workmanship and materials for a period of three years from the data of purchase.

B&K Precision Corp. will without charge, repair or replace, at its' option, defective product or component parts. Returned product must be accompanied by proof of purchase date in the form a sales receipt.

To obtain warranty coverage in the U. S. A., this product must be registered by completing and mailing the enclosed warranty card to B&K Precision Corp., 1031 Segovia Circle, Placentia, CA 92870 within fifteen (15) days from proof of purchase.

Exclusions: This warranty does not apply in the event of misuse or abuse of the product or as a result of unauthorized alternations or repairs. It is void if the serial number is alternated, defaced or removed.

B&K Precision Corp. shall not be liable for any consequential damages, including without limitation damages resulting from loss of use. Some states do not allow limitation of incidental or consequential damages, so the above limitation or exclusion may not apply to you.

This warranty gives you specific rights and you may have other rights, which vary from state-to-state.

Model Number: _____ Date Purchased: _____

ManualsPlus.com

NOTES

For this manual, it has a lot of application drawing. These drawings are using the appearance of Model 2890. For Model 2880A's application, see the Figure A. appearance of models 2880A and 2890. Please refer it to measure same applications.

In this manual, we have mentioned model A and model B. The "model A" is 2890, and the "model B" is 2880A.

Model A **Model B**

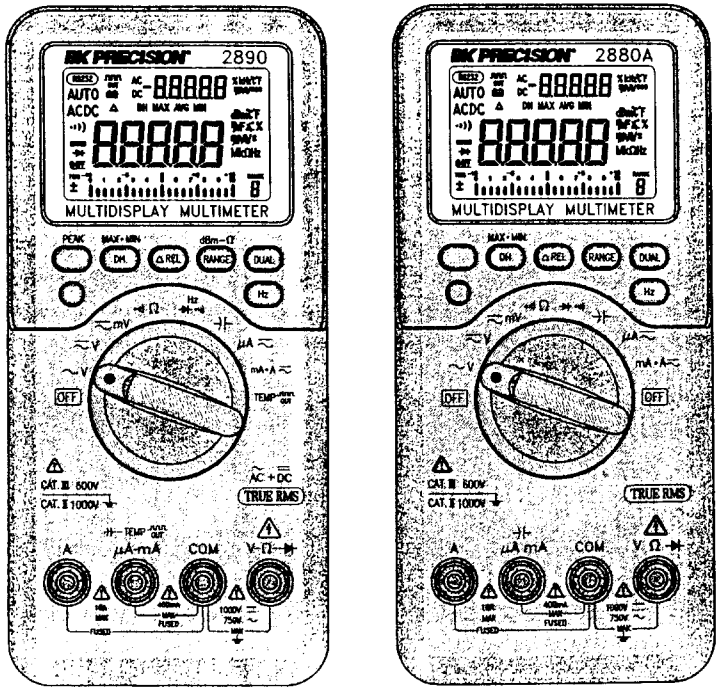

Figure A. Appearance of models 2880A and 2890.

TABLE OF CONTENTS

	PAGE
SAFETY INFORMATION	3
A UNIQUE MULTIMETER	4
• INTRODUCTION	4
An All in One Multi-functional Device	5
USING THE METER SAFELY	6
LCD DISPLAY ILLUSTRATION	7
GETTING ACQUAINTED WITH YOUR METER	9
• ROTARY SWITCH	9
• INPUT TERMINAL	10
• PUSH BUTTONS	12
PUSH-BUTTON OPERATIONS	13
POWER ON OPTIONS	16
SPECIAL FUNCTIONS INSTRUCTIONS	17
• Dynamic Recording	17
• Data Hold / Refresh Hold	19
• Relative (Zero)	19
• Analog Bargraph	20
• Auto Power Off and Sleep Mode	20
• Disable Auto Power Off	21
• Demonstrate Annunciator	21
• Backlit LCD for easy reading in the dark	21
• Continuity Function For Ohms Measurement	22
• Combination Display	23
• 1 ms Peak Hold	24
• Communication	25

ManualsPlus.com

TABLE OF CONTENTS

	PAGE
HOW TO OPERATE	26
• AC VOLTAGE MEASUREMENT	26
• DC VOLTAGE MEASUREMENT	30
• mV MEASUREMENT	33
• RESISTANCE MEASUREMENT	35
• CONDUCTANCE (1/Ω) MEASUREMENT	36
• DIODE CHECK	37
• 10MHz FREQUENCY COUNTER MEASUREMENT	38
• CAPACITANCE MEASUREMENT	39
• μA MEASUREMENT	40
• mA MEASUREMENT	42
• A MEASUREMENT	44
• TEMPERATURE MEASUREMENT	46
• SQUARE WAVE OUTPUT	48
•TIMER + SIGNAL OUTPUT	49
GENERAL SPECIFICATIONS	50
Model A	50
Model B	51
ELECTRICAL SPECIFICATIONS	52
Model A	52
Model B	58
ACCESSORIES and REPLACEMENT PARTS	61
MAINTENANCE	62
• SERVICE	62
• BATTERY REPLACEMENT	62
• FUSE REPLACEMENT	62
• CLEANING	63

SAFETY INFORMATION

☐ SAFETY INFORMATION

To ensure that you use the meter safely, follow the safety guidelines listed below:

- Read this operation manual completely before using the meter and follow all safety instructions.
- This meter is for indoor use, altitude up to 2,000 m.
- Avoid working alone.
- Use the meter only as specified in this manual; Otherwise, the protection provided by the meter may be impaired.
- Never measure Voltage while the test leads are inserted into the current input terminals.
- Do not use the meter if it looks damaged.
- Inspect the leads for damaged insulation or exposed metal. Check test lead continuity. Replace damaged leads.
- Disconnect the power and discharge all high-voltage capacitors before testing in the resistance, continuity, and diode function.
- Be cautions when working above 60V DC or 30V AC RMS. Such voltages may cause a shock hazard.
- When making measurements, keep your fingers behind the finger guards on the probe.
- Select the proper function and range for your measurement. To avoid damaging the meter, disconnect the test leads from test points before changing functions.
- CE requirement: Under the influence of R.F field according to standard, the supplied test leads will pick up induced noise. To have better shielding effect, a short-twisted lead should be used.
  The standard of test requirement shows below:
  1. IEC 801-2: That is ESD (electro-static discharge) test.
  2. IEC 801-3: This is RFI (Radio Frequency Interference) test.
     Condition: 27~500MHz, signal intensity is 3Volts per meter.
  3. IEC 801-4: This is EFT (electrical fast transient) test.
  4. EN 55011: This is EMI test.
- The meter is safety-certified in compliance with EN61010 (IEC 1010-1, IEC 1010-2-031) Installation Category III 600V and CAT II 1000V. In order to maintain its insulation properties, please be sure to use with the standard or compatible test probes.

ManualsPlus.com

A UNIQUE MULTIMETER

☐ INTRODUCTION

This series product has two models. Both of meters are TRUE-RMS measurement. One combines AC/DC voltage and current, frequency measurements etc. It is high accuracy and economical choice.

The other one offers the combination of TRUE-RMS measurements (AC+DC TRUE RMS), Frequency, Duty Cycle and Pulse width measurements. Conductance measurement helps detect the insulation of conductor and ground. A unique function of Square wave out, let user have free space for application. For instance, PWM (pulse width modulation) out, adjustable voltage control, timer to control circuit, synchronic clock (baud rate generator) etc,. That is a free-for-all application function.

Frequency measurement helps detect the presence of harmonics in neutral conductors and determine whether they are the result of unbalanced phases or non-linear loads.

The MULTIMETER is shown in **Figure 1**. This meter has a lot of functions there are shown below:

- **A unique Square Wave out function.**
- **Resolution of display adjustable: 4,000/ 40,000 counts.**
- **TRUE RMS measurement for non-linear and traditional loads.**
- **Both Current and Voltage can do AC+DC measurement.**
- **Bi-directional 1 ms Peak Hold feature to capture glitch.**
- **Many combinations of Dual display for easily analyzing components of Current or Voltage signal.**
- **10 MHz frequency counter.**
- **High impedance measurement (40 nS / 100 GΩ).**
- **dBm measurement can select 20 types of reference impedance.**
- **K-type temperature measurement.**
- **Dynamic Recording with relative time helps to record the variation of tests.**
- **Back-lit display for easy reading in the dark places.**
- **Data Hold to freeze displayed digital value.**
- **Refresh Hold to freeze the digital value for difficult measuring place.**
- **Relative function**
- **Auto and Manual Ranging**

An ALL in ONE Multi-functional Device

Multi-display multimeter
+ Signal analysis Capability
+10MHz frequency counter
+ Conductance measurement (High impedance:100GΩ)
+ Function generator (Square wave out)
+ Bi-directional 1 ms peak hold

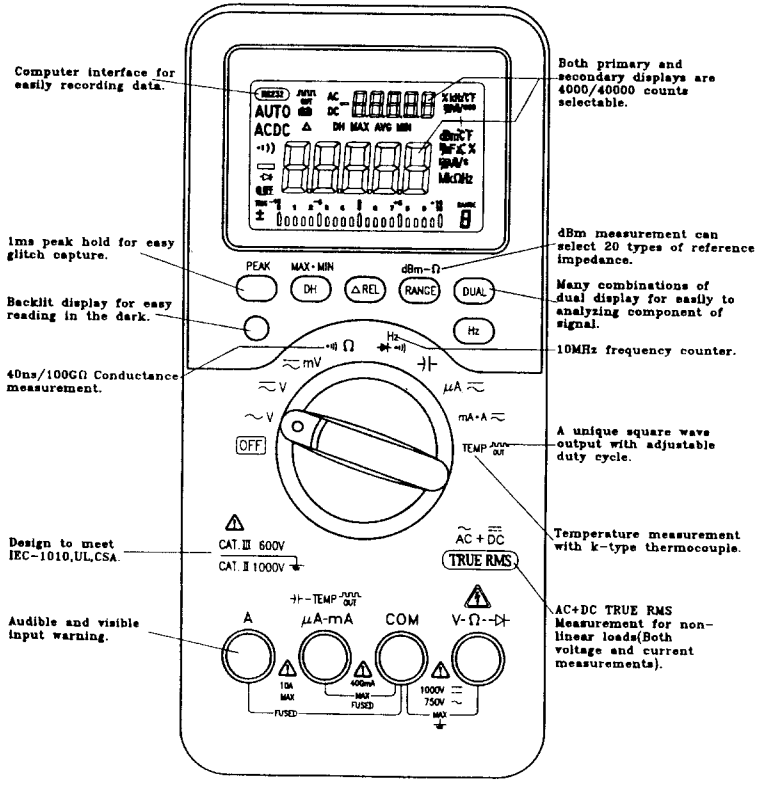

Figure 1. A unique multi-functional Device.

ManualsPlus.com

USING THE METER SAFELY

☐ WARNING

Read "SAFETY INFORMATION" before using the meter.

☐ NOTE

Your multimeter is a hand-held, battery-operated instrument for testing and troubleshooting power electronic systems. If the meter is damaged or something is missing, contact the place of purchase immediately.

A **WARNING** identifies conditions and actions that may cause hazard(s) to the user; a **CAUTION** identifies conditions and actions that may damage the Meter. International electrical symbols used are explained in **Table 1**.

~	AC - Alternating Current
⎓	DC - Direct Current
≂	AC and DC - Alternating and Direct Current
⏚	Ground
⧈	Double Insulation
⚠	See Explanation In The Manual

Table 1. International Electrical Symbols

LCD DISPLAY ILLUSTRATION

1)	-10 -5 0 +5 -10 / 0 1 2 3 4 5 6 7 8 9 10	: Analog bar graph annunciator with scale indicators
2)	OFF	: Auto power off is enabled
3)		: Battery power is weakening
4)	DC	: Direct Current or Voltage
5)	AC	: Alternating Current or Voltage
6)	ACDC	: The measurement is AC+DC (Alternating + Direct Current or Voltage)
7)	AUTO	: AUTO range Mode
8)	Δ	: Zero(Delta) mode annunciator
9)	DH	: Data hold annunciator
10)	MAX AVG MIN	: Dynamic recording mode, indicates the present reading
11)	MAX	: Maximum reading
12)	AVG	: Average reading
13)	MIN	: Minimum reading
14)	DH MAX	: 1 ms peak hold maximum reading
15)	DH MIN	: 1 ms peak hold minimum reading
16)	•))	: Continuity function annunciator
17)	•)) ⊣⊢	: Diode/Audible continuity function annunciator
18),20)	mA	: Current unit of primary or secondary display
19),21)	mV	: Voltage unit of primary or secondary display
22)	MkΩ	: Resistance (ohm) units
23)	n s	: Conductance unit (nano-siemens).
24) ,25)	MkHz	: Frequency units for primary or secondary display
26)	%	: Duty cycle unit
27)	ms	: Pulse width unit
28)	RANGE 8	: The measuring range of each function.
29)	sec	: Relative time unit (second)
30)	⎍ 0 0 T	: Square wave output annunciator
31)		: Communication ON annunciator
32)	TRIG ±	: + or - annunciator of trigger slope for Duty cycle and Pulse width measurements
33), 34)	°C °F	: Temperature units
35)	μF	: Capacitor units
36)	dBm	: dBm annunciator

ManualsPlus.com

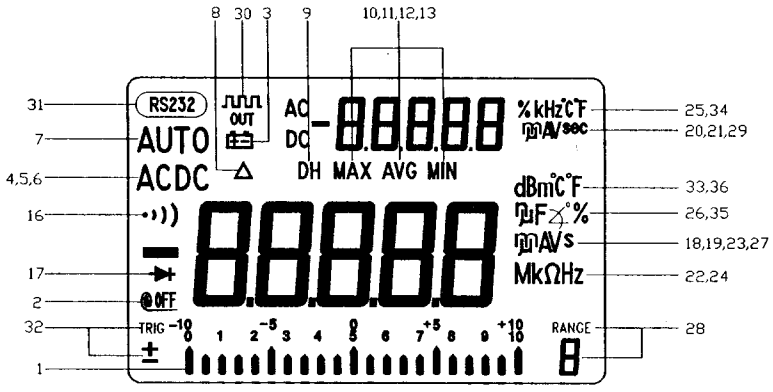

Figure 2. LCD Display

Getting Acquainted With Your Meter

☐ Rotary Switch

To turn the meter on and select a function, turn the rotary switch (**Figure 3**) to a switch setting. The whole display lights for one second. Then the meter is ready for use. (If you press and hold any push button while turning the meter from OFF to ON, the display will remain lit until the push button is released.)

1) Power Off Position
2) AC coupling voltage measurements.
3) DC, AC or DC+AC Voltage measurements.
4) DC, AC or DC+AC millivolt measurements.
5) Resistance, Continuity and conductance measurements: 400Ω~ 40MΩ and 40 nano-Siemens (high impedance)
6) Diode or 10 MHz Frequency counter measurements.
7) Capacitance measurement: 4nF ~9999µF
8) DC, AC or DC+AC Microampere measurements: 400~4000µA
9) DC, AC or DC+AC milliampere and ampere measurements: 40~400mA or 4 ~ 10A.
10) Temperature measurement or Square wave out.

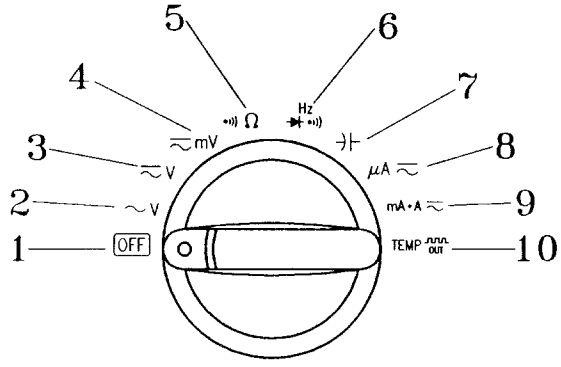

Figure 3. Rotary Switch

ManualsPlus.com

☐ INPUT TERMINAL

WARNING

To avoid damaging the meter, do not exceed the input limit shown below Table 2:

ROTARY SWITCH FUNCTION	INPUT TERMINAL	OVERLOAD PROTECTION
ACV 4V ~ 750V	V Ω ⊣▶⊢ & COM	850V AC
DCV 4V ~ 1000V		1200V DC
AC/DC 40mV ~ 400mV		600V DC/AC RMS
DCA 400μA ~400mA	μA mA & COM	1A/600V High energy Fuse
ACA 400μA ~400mA		
DCA 4A ~ 10A	A & COM	15A/600V High energy Fuse
ACA 4A ~ 10A		
Capacitor 4nF ~ 9999μF	⊣⊢ & COM	600 DC/AC RMS
OHM (Ω)	V Ω ⊣▶⊢ & COM	
DIODE (⊣▶⊢ •)))		
Temperature	Temp OUT & COM	600V DC/AC RMS
Square wave output		
Pulse width (ms)	V- Ω -⊣▶⊢ & COM	850VAC/1200VDC for voltage measurement 600V DC/AC for frequency counter Measurement
Duty cycle(%)		
FREQUENCY (Hz)		

Table 2. Input limit specification.

This meter has four input terminals (**Figure 4**) that are protected against overloads to the limits shown in the specifications.

1) Common terminal for all measurements.
2) Volts, Ohms, Diode test and Frequency (Duty Cycle) of Voltage measurements.
3) Current (maximum 400mA), Capacitor and Temperature measurements. Square wave output.
4) Current (maximum 10 A continuous, 20 A 30 seconds) measurement.

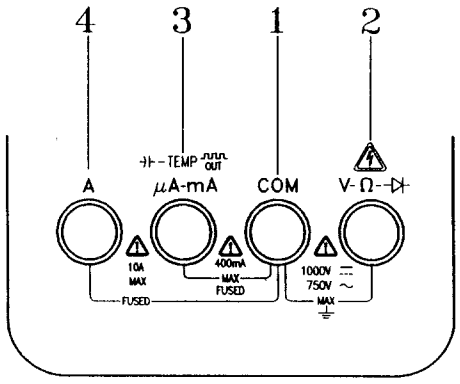

Figure 4. Input Terminal

ManualsPlus.com

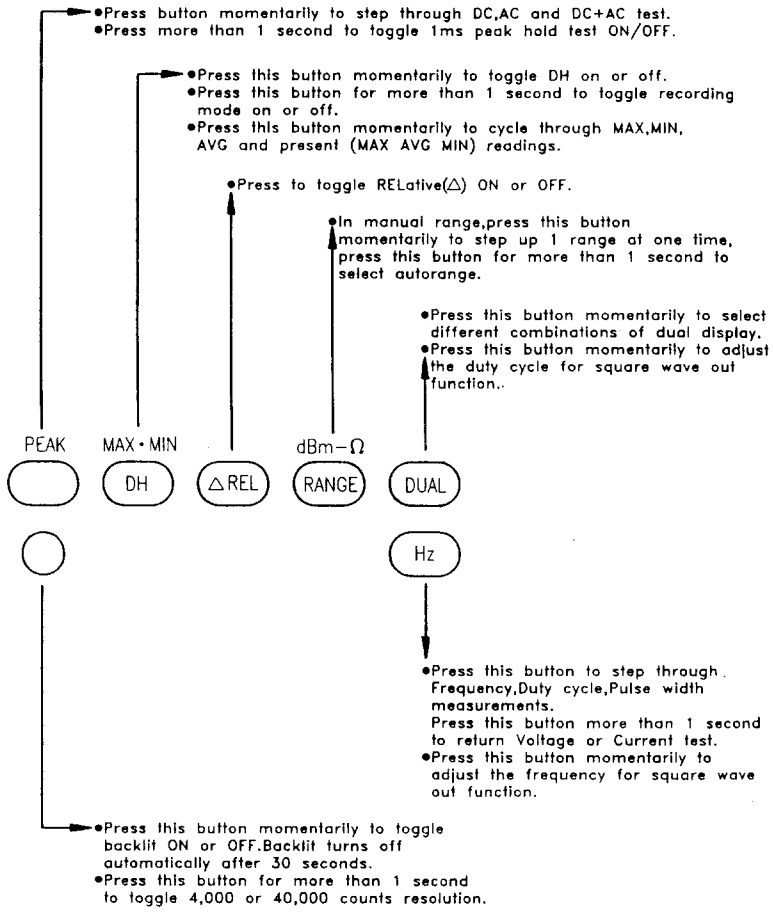

Figure 5. Push buttons

PUSH-BUTTON OPERATIONS

The operation of push-button is shown as below. When push the button, a display symbol will light, and the beeper will sound. Turning the rotary switch to another switch setting resets all push buttons to their default state.

1. DC • AC/PEAK (GREEN):

Select DC, AC, DC+AC, Peak Test

- This button is used for selecting the measurement of either alternating source, direct source, DC+AC or 1 ms peak hold (glitch capture) function.
- Push this button momentarily to step through DC, AC and DC+AC test.
- Press this button for more than 1 second to toggle 1 ms peak hold test ON/OFF. The display will show "**DH MAX**" to indicate the PEAK + and show "**DH MIN**" to indicate the PEAK -.
- For Ohm test, push this button momentarily to toggle"•))" ON/OFF. The beeper will sound continuity when test value below 100 counts.
- For Duty cycle and Pulse width tests, press this button for more than 1 second to change the trigger slope + or -.

2. Hz:

Select Frequency, Duty Cycle, Pulse Width Test

- For Volt or Amp test, press this button momentarily to enter Frequency test and Voltage or Current is indicated in secondary display. Press this button again to step through Frequency, Duty cycle, Pulse width test. Press this button more than 1 second to return to Voltage or Current measurement.
- The combinations of dual display are shown in the following by pushing Hz button.

Function	Primary display	Secondary display	Remark
AC Voltage	Frequency (Hz)	AC Volt	
	Duty Cycle (%)	AC Volt	
	Pulse Width (ms)	AC Volt	
DC Voltage	Frequency (Hz)	DC Volt	
	Duty Cycle (%)	DC Volt	
	Pulse Width (ms)	DC Volt	
AC+DC Voltage	Frequency (Hz)	AC+DC Volt	
	Duty Cycle (%)	AC+DC Volt	
	Pulse Width (ms)	AC+DC Volt	
DC/AC Current	Frequency (Hz)	DC/AC Amps	
	Duty Cycle (%)	DC/AC Amps	
	Pulse Width (ms)	DC/AC Amps	
AC+DC Current	Frequency (Hz)	AC+DC Amps	
	Duty Cycle (%)	AC+DC Amps	
	Pulse Width (ms)	AC+DC Amps	

- Press this button momentarily to select different output frequency for square wave out function.

ManualsPlus.com

3. DH:

DATA HOLD or Refresh Data Hold

- The data hold function allows operator to hold the displayed digital value while the analog bar-graph continues showing the present readings.
- To select " Refresh Hold " by Power-ON Options. The reading can be updated to the indicator automatically when the reading is changed. And simultaneously the beeper sounds a tone to remind user,
- Press this button momentarily to toggle DH on or off.

4. MAX • MIN:

Dynamic Recording

- Record maximum, minimum, and calculates true average.
- Press this button for more than 1 second to toggle recording mode on or off. The secondary display shows the relative time in the recording mode. The unit of relative time is second. The maximum time is 99,999 seconds.
- Press this button momentarily to cycle through **MAX, MIN, AVG** and present (**MAX AVG MIN**) readings.
- The beeper sounds when a new maximum or minimum value is recorded.
- Press this button momentarily to cycle through **Peak +**, **Peak -** reading after setting peak mode. The screen shows "**DH MAX**" to indicate the PEAK + and show "**DH MIN**" to indicate the PEAK -.

5. Δ REL (ZERO)

Relative

- The relative function shows the difference between the measured value and the stored value.
- Press to toggle **RELative(Δ)** ON or OFF.

6. RANGE:

- In auto-range, press this button to select manual range and turn off the "**AUTO**" annunciator.
- In manual range, press this button momentarily to step up 1 range at one time, press this button for more than 1 second to select auto-range.
- In auto-range, the " **AUTO** " annunciator is lit and the meter will select an appropriate range for resolution if a reading is greater than maximum available range, " OL "(overload) will be displayed on the display. The meter will select a lower range when reading is less than about 9% of full scale.
- Push this button momentarily to change measuring range and re-start the PEAK+ and PEAK- measurements after setting the peak mode.

7. ☼:

Back-lit

- Press this button momentarily to toggle back-lit ON or OFF. Back-lit turns off automatically after 30 seconds.
- Press this button for more than 1 second to toggle 4,000 or 40,000 counts resolution.

8. DUAL:

Dual Display Combination

- Press this button momentarily to select different combinations of dual display. The combinations of dual display are shown following table.

Function	Primary display	Secondary display	Remark
AC Voltage	AC Volt	Frequency	
	dBm	AC Volt	
	dBm	Frequency	
	AC Volt	DC Volt	
DC Voltage	DC Volt	Frequency	
	dBm	DC Volt	
	DC Volt	AC volt	
AC + DC Voltage	AC+DC Volt	Frequency	
	dBm	AC+DC voltage	
	AC+DC Volt	AC Volt	
	AC+DC Volt	DC Volt	
AC Current	AC Amps	Frequency	
	AC Amps	DC Amps	
DC Current	DC Amps	Frequency	
	DC Amps	AC Amps	
AC+DC Current	AC+DC Amps	Frequency	
	AC+DC Amps	AC Amps	
	AC+DC Amps	DC Amps	
Temperature	Celsius (°C)	Fahrenheit (°F)	
	Fahrenheit (°F)	Celsius (°C)	

- Press this button momentarily to adjust the duty cycle for square wave out function.
- Push this button momentarily to re-start a new peak value measurement after setting peak mode.

ManualsPlus.com

POWER-ON OPTIONS

■ SELECTING POWER-ON OPTIONS

Some options can be selected only when you turn the meter on. These power-on options are listed in **Table 3.** To select power-on options, press and hold push button while turning the rotary switch to any on position. Power-on options remain selected until the meter is turned off.

PUSHBUTTON	OPTION DESCRIPTION
PEAK O (GREEN)	**Demonstrate Annunciators** To demonstrate the annunciators, The entire annunciators will be displayed. Press the button again to exit demonstration mode. **Disable auto-power off** In general, the auto power off function will turn the meter off if neither rotary switch nor push button is activated for 15 minutes. When auto power off is disabled, the meter will stay on continuously. Auto-power off will be auto disabled in Dynamic Recording.
DH	**Enable "Refresh Hold".**
Δ REL	**Disable beeper function.** Turns off all beeper functions.
RANGE	**Select 4,000/40,000 counts resolution.** In general, The meter is 4,000 counts (3 3/4 digits) resolution and the response time is 3.3 times per second. By this option, the meter can be changed to 40,000 counts (4 3/4 digits) resolution and the response time can be updated to one time per second
O	Disable back-lit turns off automatically after 30 seconds.
DUAL	**Set Computer Interface.** Turn on Data output function by RS-232C interface. The RS232 annunciator will turn lit.

Table 3. Power-ON Options

SPECIAL FUNCTIONS INSTRUCTIONS

This multi-meter provides operators with various functions including:

- ☐ **Dynamic Recording**
- ☐ **Data Hold / Refresh Hold**
- ☐ **Relative**
- ☐ **Analog Bar-graph**
- ☐ **Auto Power Off and Sleep Mode**
- ☐ **Disable Auto Power Off**
- ☐ **Demonstrate Annunciator of Display**
- ☐ **Back-lit LCD for easy reading in the dark**
- ☐ **Continuity Function For Ohms Measurement**
- ☐ **Combination Display**
- ☐ **1 ms Peak Hold**
- ☐ **Communication Function**

☐ DYNAMIC RECORDING

The dynamic recording mode can be used to catch intermittent turn on or turn off surges, verify performance, measure while you are away, or take readings while you are operating the equipment under test and can not watch the meter.

The average reading is useful for smoothing out unstable or changing inputs, estimating the percentage of time a circuit is operated, or verifying circuit performance.

The operational procedures are described below:

1) Press "**MAX • MIN**" for more than 1 second to enter the dynamic recording. The present value is stored to memories of maximum, minimum and average. **MAX AVG MIN** annunicator will be on.
2) Press this button for more than 1 second to exit recording mode.
3) Press this button momentarily to cycle through maximum, minimum, average and present readings. The **MAX**, **MIN**, **AVG** or **MAX AVG MIN** annunciator turns on respectively to indicate which value is being displayed. See **Figure 6.**
4) The beeper sounds when a new maximum or minimum value is recorded.
5) If an overload is recorded the averaging function will stop. An average value becomes " **OL** "(overload).
6) **In dynamic recording, the auto power off feature is disabled. and the "OFF" will be turned off.**
7) Selecting dynamic recording in auto range, it will record the value of MAX, MIN or AVG for different ranges.

ManualsPlus.com

8) The recording speed of dynamic recording is about 100 milli-seconds (0.1 second).
9) The average value is the true average of all measured values taken since the recording mode was entered.
10) The secondary digits show the relative stamping time for MAX, MIN, AVG reading.
11) The unit of relative time is second, and the maximum display is 99,999 sec.

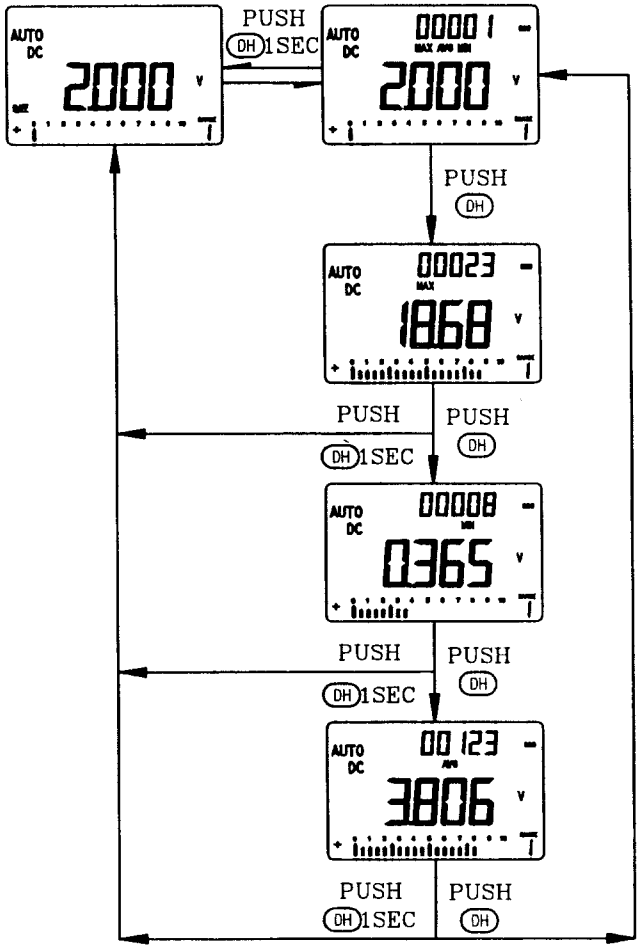

Figure 6. Display of Dynamic Recording

☐ DATA HOLD / REFRESH HOLD

The data hold function allows operators to hold the displayed digital value, while the analog bargraph continues showing the present readings. Press **DH** button to enter the data hold mode, and the "**DH**" will be displayed. Press the button again to exit. The present reading is now shown.

You can use the power-on option to set the **Refresh Hold** when you are working on a difficult measuring field. This function will freeze measuring value automatically, and sound a tone to remind user. The operation of push button is same as the operation of Data hold.

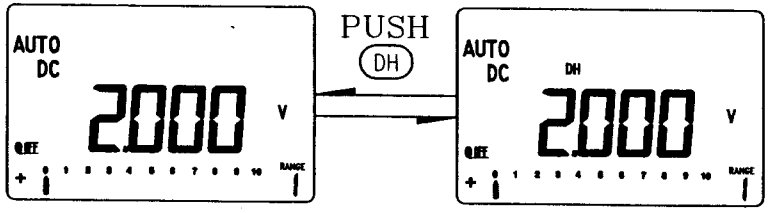

Figure 7. Data Hold Operation.

☐ RELATIVE (ZERO)

The relative function subtracts a stored value from the present measurement and displays the result.

1) Press **ΔREL** button momentarily to set the relative mode. This sets the display to zero and stores the displayed reading as a reference value, also " Δ " will be displayed.
2) Both auto or manual range can set relative mode. The relative mode can't be set when an overload has occurred.
3) Press this button again to exit the relative mode.
4) In the relative mode, the zero point of bar graph is set to middle position.
5) When the Ohm measurement is entered, the display will reads a non-zero value due to the presence of test leads. You can use the relative function to Zero-Adjust the display.

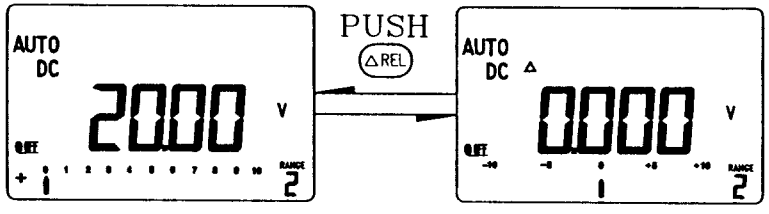

Figure 8. Relative(Zero) Operation.

ManualsPlus.com

☐ ANALOG BARGRAPH

The analog bargraph display provides a 21 segments analog reading representation. The unit of the bargraph is 50 counts/bar except when in the **REL**ative mode. The unit of the bargraph is 100 counts/bar in the **REL**ative mode. For increased sensitivity, the display of bar graph moves across the scale four times for each range. The bar returns to 0 (wraps around) for 1000, 2000, 3000, 4000 counts.

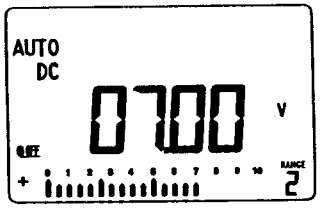

Bar graph unit: 50 counts/Bar

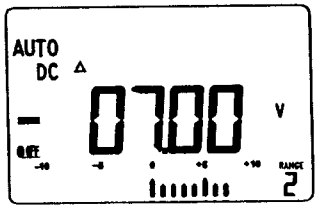

Bar graph unit: 100 counts/Bar

Figure 9. Analog Bar Graph.

☐ AUTO POWER OFF AND SLEEP MODE

Two steps for power saving:

1) The instrument may enter "sleep" mode within 15 minutes, if none of the following happens.
   - 1-1. Push buttons are used.
   - 1-2. Measurement function is changed.
   - 1-3. Dynamic recording is set.
   - 1-4. 1 ms peak hold is set.
   - 1-5. Disable auto power off with power-up option.
2) In sleep mode, the LCD will display a blinking "OFF . . ." signal.
   - 2-1. To wake-up sleep mode, press any push button for more than 0.5 sec or rotate rotary switch.
   - 2-2. Without waking up, after 15 minutes, the meter will automatically shut off completely.
3) You must turn the rotary switch to the OFF position, then turn on again to activate the meter after auto power off.

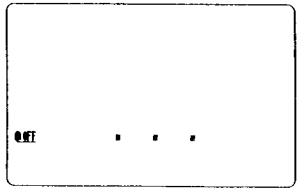

Figure 10. Sleep Mode

☐ DISABLE AUTO POWER OFF

When the meter is to be used for long periods of time, the operator may want to disable the auto power off. Once the auto power off function is disabled, the meter will stay on continuously. To shut off the meter by turning the rotary switch to the off position.

To activate this function, press and hold the **GREEN** button before switching the meter power on. When all annunciators are displayed, press any button momentarily to exit demonstration mode, and the "OFF" annunciator will be off.

☐ DEMONSTRATE ANNUNCIATOR

To demonstrate the annunciators, press **GREEN** button and turn on the meter simultaneously. All annunciators will be displayed. Press any button to exit demonstration mode.

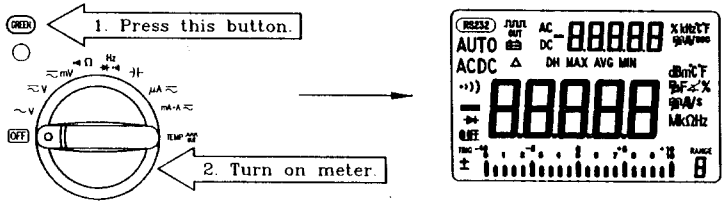

Figure 11. Demonstrate Annunciator.

☐ BACKLIT DISPLAY FOR EASY READING IN THE DARK

Press ❍ (yellow) button for more than 1 second to toggle back-light ON/OFF. Back-light turns off automatically after 30 seconds.
To disable back-light (off automatically after 30 seconds), please refer to POWER_ON option introduction.

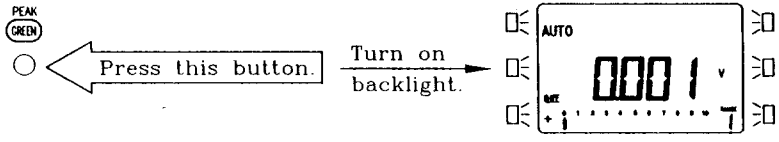

Figure 12. Back-lit Display.

ManualsPlus.com

☐ CONTINUITY FUNCTION FOR OHMS MEASUREMENT

In Ohm test, press **GREEN** button momentarily to toggle **CONTINUITY** function ON/OFF. The continuity range is 0-400.0Ω. Momentarily pushing this button will only turn the beeper on/off.
While testing continuity, the beeper will sound if the resistance falls below 10Ω. For other range, the beeper will sound if the resistance falls below the typical values indicated in Table 4.

Table 4. Beeper Responses in Continuity Test

Measuring range	Beeper On if
400.0 Ω	<10 Ω
4.000 kΩ	<100 Ω
40.00 kΩ	<1 kΩ
400.0 kΩ	<10 kΩ
4.000 MΩ	<100 kΩ
40.00 MΩ	<1 MΩ

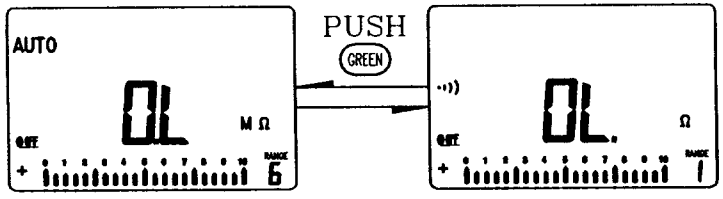

Figure 13. Continuity Operation.

☐ COMBINATION DISPLAY

The frequency measuring helps to detect the presence of harmonic currents in neutral conductors and determines whether these neutral currents are the result of unbalanced phases or non-linear loads.

For Voltage or Current test, press **Hz** button momentarily to enter Frequency test. Voltage or Current will display on the secondary display, the frequency will display on the primary display. Press this button again to step through Frequency, Duty cycle and pulse width tests. This allows simultaneously monitor the current levels and frequency (or Duty Cycle, or pulse width).

Press **Hz** button more than 1 second to return to Voltage or Current measurement.

Please refer to the chapter of **how to operate,** that will detail for other combination display.

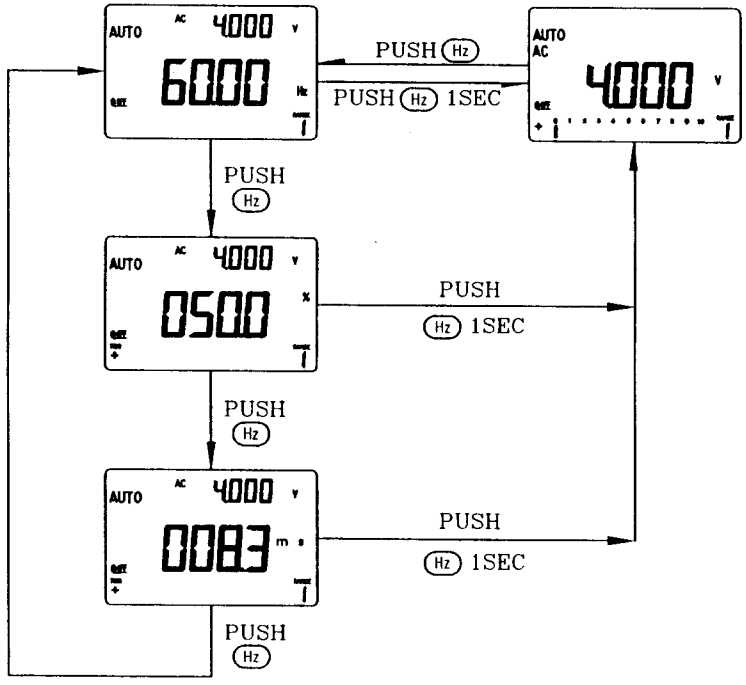

Figure 14. Combination Display for Voltage Measuring.

ManualsPlus.com

HOW TO OPERATE

☐ AC VOLTAGE MEASUREMENT

1) Set the rotary switch to " ∿ **V** ".
2) Connect the black test lead to " **COM** " terminal and red test lead to "**V Ω** ⊣⊢" terminal.
3) Touch the probes to the test points and read the display.
4) Push **GREEN** button momentarily to enter dBm measurement.

Key operation	Primary display	Secondary display
Push GREEN	dBm	
Push GREEN	AC Voltage	

5) Push **DUAL** button momentarily to enter multi-display mode.
Below, that is **DUAL** button operation for AC voltage.

Key operation	Primary display	Secondary display
Push Dual	AC Voltage	Hz
Push Dual	dBm	AC Voltage
Push Dual	dBm	Hz
Push Dual	AC Voltage	

6) Push **Hz** button momentarily to enter frequency measurement and push this button again to step through Duty cycle, Pulse width and frequency measurements.

Key operation	Primary display	Secondary display
Push Hz	Hz	AC Voltage
Push Hz	%	AC Voltage
Push Hz	ms	AC Voltage
Push Hz and hold more than 1 second	AC Voltage	

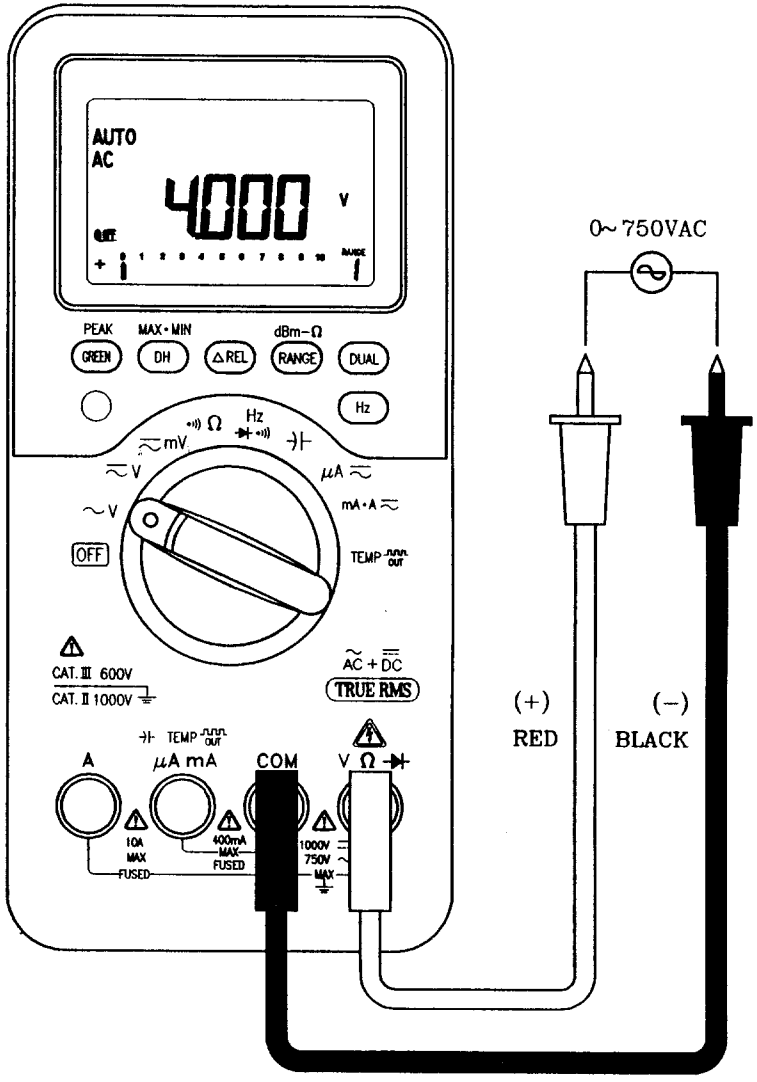

Figure 17. AC voltage measurement.

ManualsPlus.com

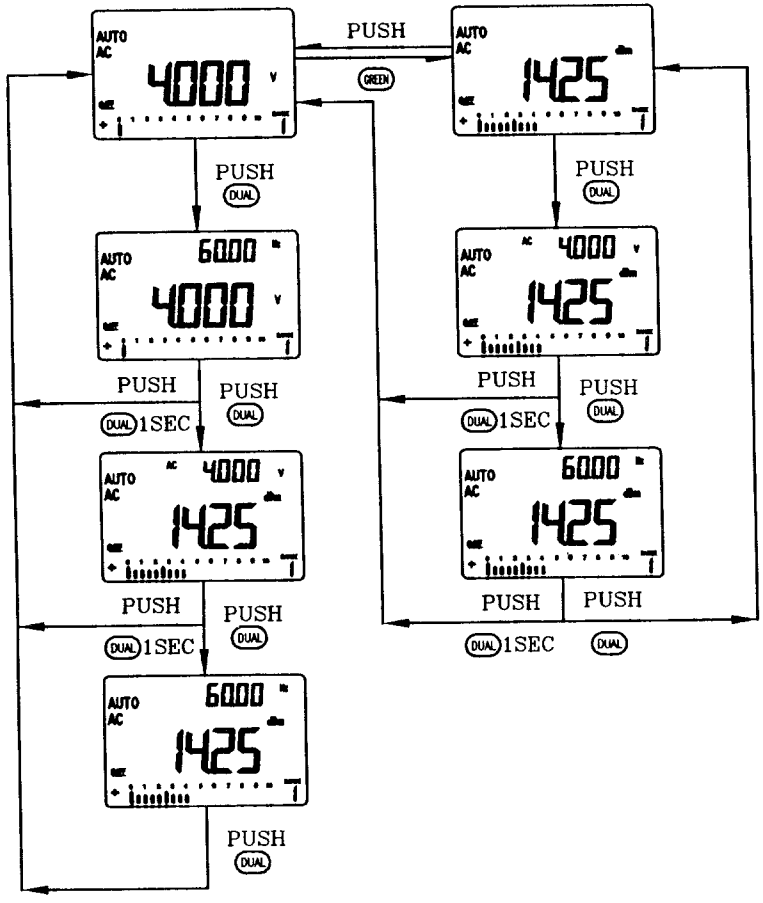

Figure 18. DUAL and GREEN buttons operation for AC voltage.

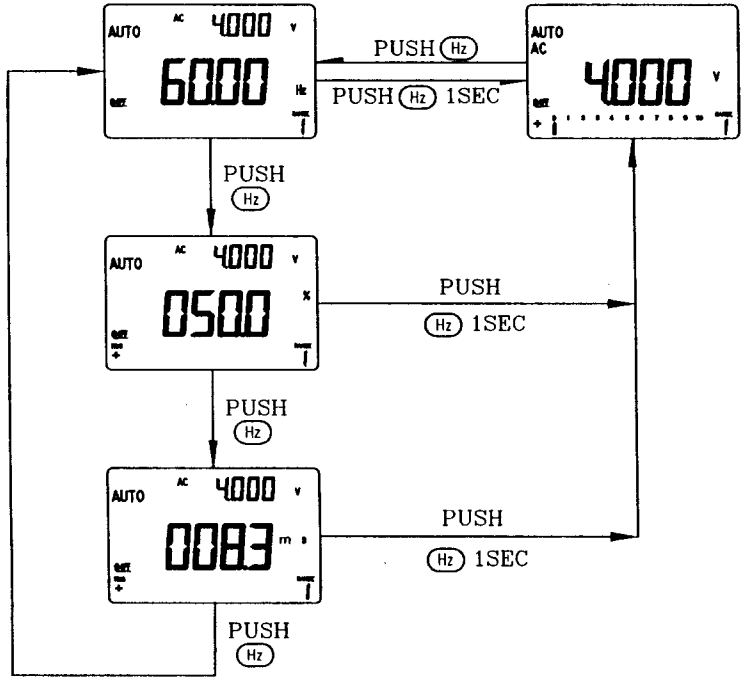

Figure 19. Hz button operation for AC voltage.

ManualsPlus.com

☐ DC VOLTAGE MEASUREMENT

1) Set the rotary switch to " ⎓ V ".
2) Connect the black test lead to " **COM** " terminal and red test lead to "**V Ω** ⊣▶⊢" terminal.
3) Touch the probes to the test points and read the display.
4) Push **GREEN** button momentarily to step through AC, AC+DC and DC test.

Key operation	Primary display	Secondary display
Push GREEN	AC Voltage	
Push GREEN	AC+DC Voltage	
Push GREEN	DC Voltage	

5) Push **DUAL** button momentarily to enter multi-display mode.
Below, the table is **DUAL** button operation for DC voltage.

Key operation	Primary display	Secondary display
Push Dual	DC Voltage	Hz
Push Dual	dBm	DC Voltage
Push Dual	DC Voltage	AC Voltage
Push Dual	DC Voltage	

Below, that is **DUAL** button operation for AC voltage.

Key operation	Primary display	Secondary display
Push Dual	AC Voltage	Hz
Push Dual	dBm	AC Voltage
Push Dual	AC Voltage	DC Voltage
Push Dual	AC Voltage	

Below, the table is **DUAL** button operation for AC+DC voltage.

Key operation	Primary display	Secondary display
Push Dual	AC+DC Voltage	Hz
Push Dual	dBm	AC+ DC Voltage
Push Dual	AC+DC Voltage	AC Voltage
Push Dual	AC+DC Voltage	DC Voltage
Push Dual	AC+DC Voltage	

6) Push **Hz** button momentarily to enter frequency measurement and push this button again to step through Duty cycle, Pulse width and frequency measurements.

Key operation	Primary display	Secondary display
Push Hz	Hz	DC(AC, AC+DC) Voltage
Push Hz	%	DC(AC, AC+DC) Voltage
Push Hz	ms	DC(AC, AC+DC) Voltage
Push Hz and hold more than 1 second	DC(AC, AC+DC) Voltage	

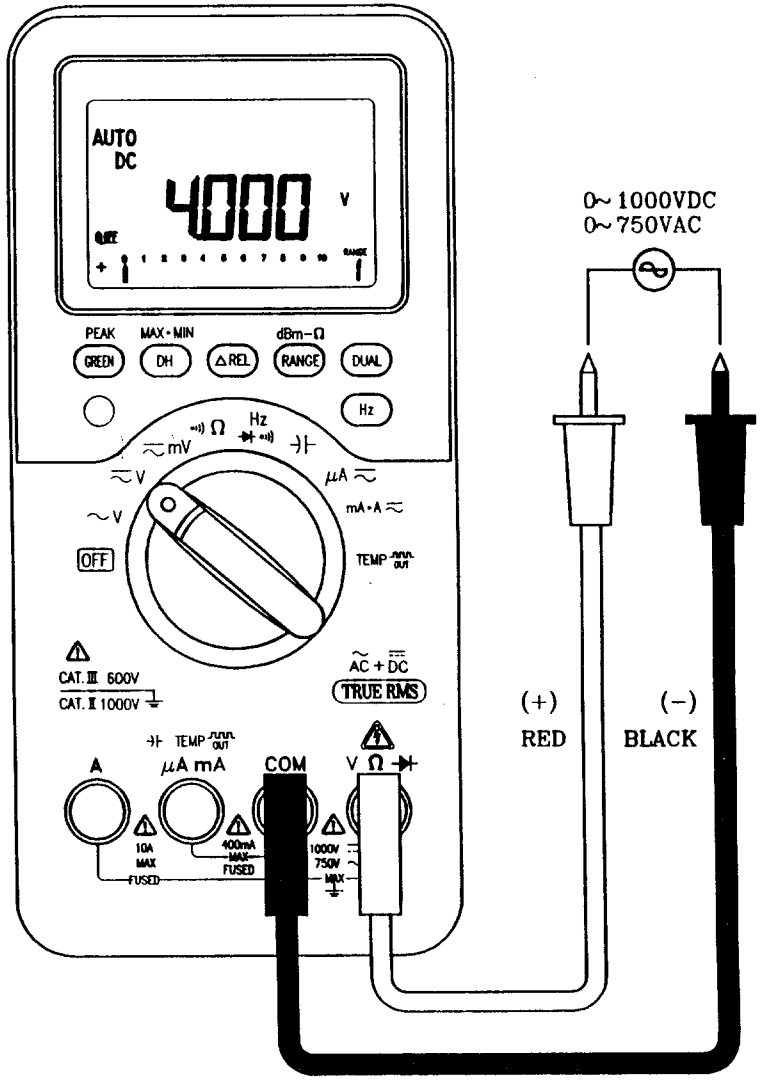

Figure 20. DC voltage measurement.

ManualsPlus.com

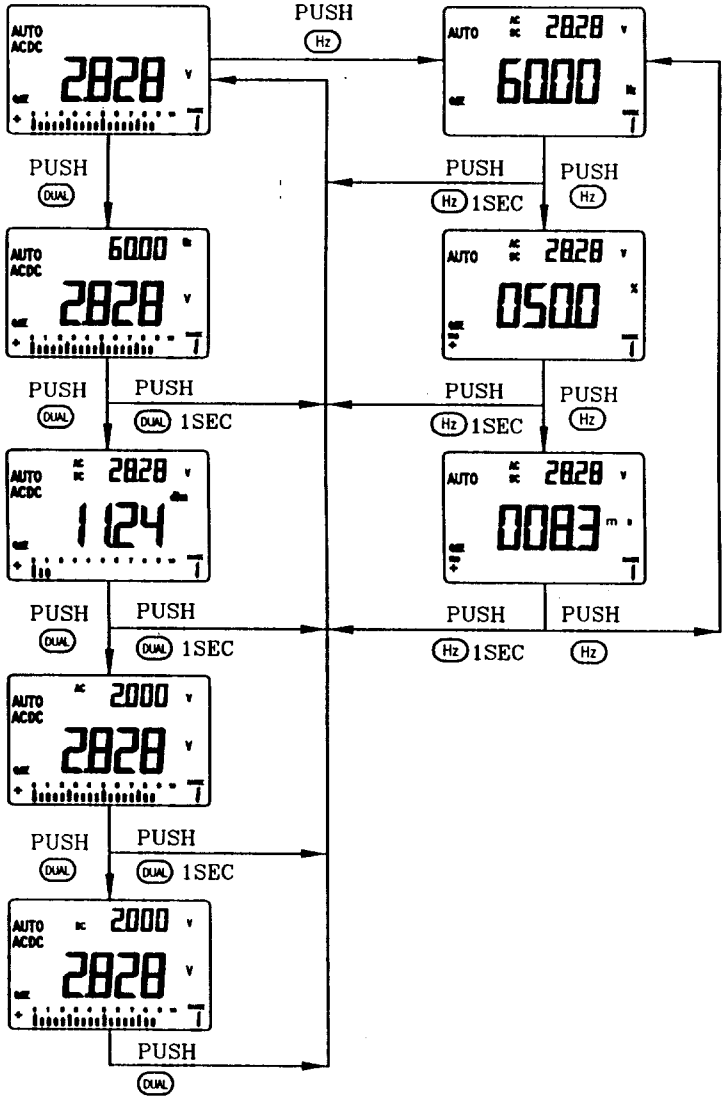

Figure 21. DUAL and Hz buttons operation for AC+DC voltage.

☐ mV MEASUREMENT

1) Set the rotary switch to " ⏦ **mV** ".
2) Connect the black test lead to " **COM** " terminal and red test lead to "**V Ω** ⊣⊢" terminal.
3) Touch the probes to the test points and read the display.
4) Push **GREEN** button momentarily to step through AC, AC+DC and DC test.

Key operation	Primary display	Secondary display
Push GREEN	AC mV	
Push GREEN	AC+DC mV	
Push GREEN	DC mV	

5) Push **DUAL** button momentarily to enter multi-display mode.
Below, the table is **DUAL** button operation for DC mV.

Key operation	Primary display	Secondary display
Push Dual	DC mV	Hz
Push Dual	dBm	DC mV
Push Dual	DC mV	AC mV
Push Dual	DC mV	

Below, the table is **DUAL** button operation for AC mV.

Key operation	Primary display	Secondary display
Push Dual	AC mV	Hz
Push Dual	dBm	AC mV
Push Dual	AC mV	DC mV
Push Dual	AC mV	

Below, the table is **DUAL** button operation for AC+DC mV.

Key operation	Primary display	Secondary display
Push Dual	AC+DC mV	Hz
Push Dual	dBm	AC+ DC mV
Push Dual	AC+DC mV	AC mV
Push Dual	AC+DC mV	DC mV
Push Dual	AC+DC mV	

6) Push **Hz** button momentarily to enter frequency measurement and push this button again to step through Duty cycle, Pulse width and frequency measurements.

Key operation	Primary display	Secondary display
Push Hz	Hz	DC(AC, AC+DC) mV
Push Hz	%	DC(AC, AC+DC) mV
Push Hz	ms	DC(AC, AC+DC) mV
Push Hz and hold more than 1 second	DC(AC, AC+DC) mV	

ManualsPlus.com

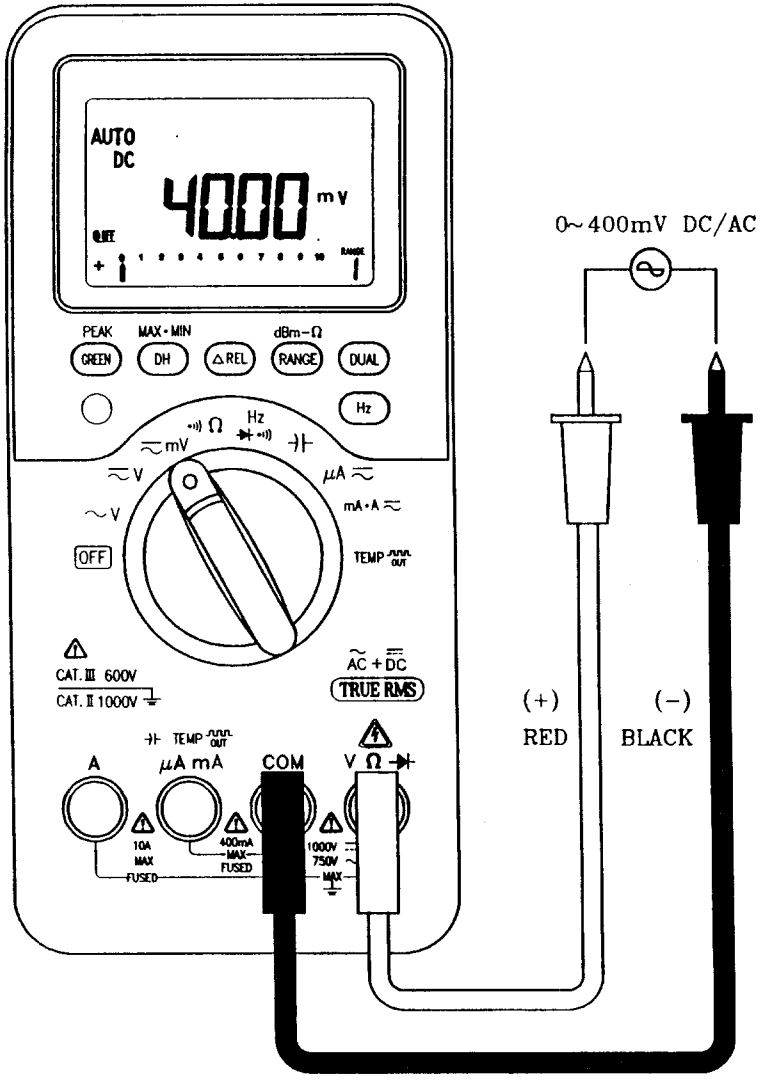

Figure 22. DC mV measurement.

☐ RESISTANCE MEASUREMENT

1) Set the rotary switch to " •))) Ω".
2) Connect the black test lead to " **COM** " terminal and red test lead to "**V Ω** ⊣⊢" terminal.
3) Touch the probes to resistor and read the display.
4) In Ohm test, press GREEN button momentarily to toggle **CONTINUITY** function ON/OFF. The continuity range is 0-400.0 Ω. Momentarily pushing this button will only turn the beeper off. While testing continuity, the beeper will sound if the resistance falls below 10 Ω.

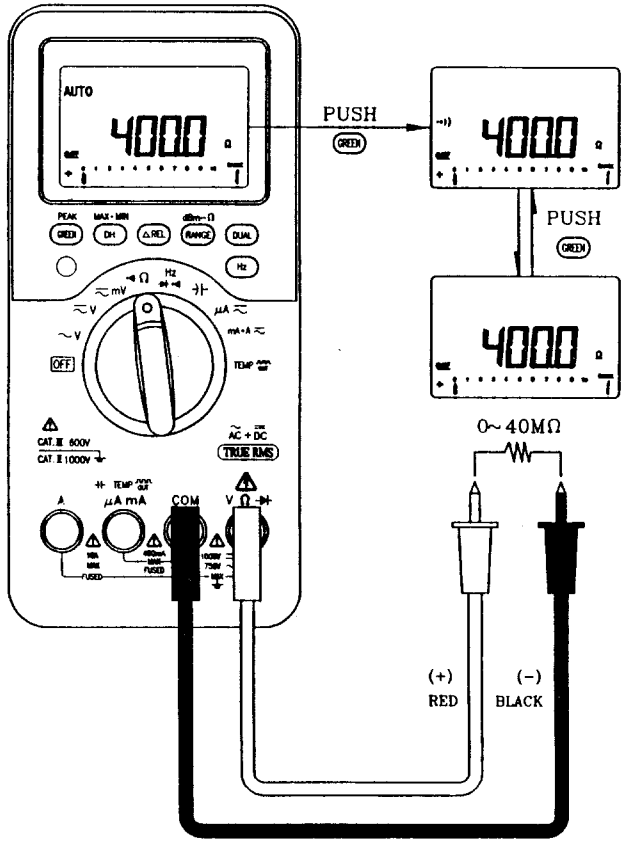

Figure 23. Resistance measurement.

ManualsPlus.com

☐ CONDUCTANCE (1/Ω) MEASUREMENT

1) Set the rotary switch to " •))) Ω".
2) Connect the black test lead to " **COM** " terminal and red test lead to "**V Ω** ⊣⊢" terminal.
3) Open the test leads until the OL is indicated on display.
4) Push RANGE button twice to range 7.
5) Push REL button momentarily to zero the residual if necessary.
6) Touch the probes to resistor and read the display.
7) Conductance unit is nS (nano-Siemens).

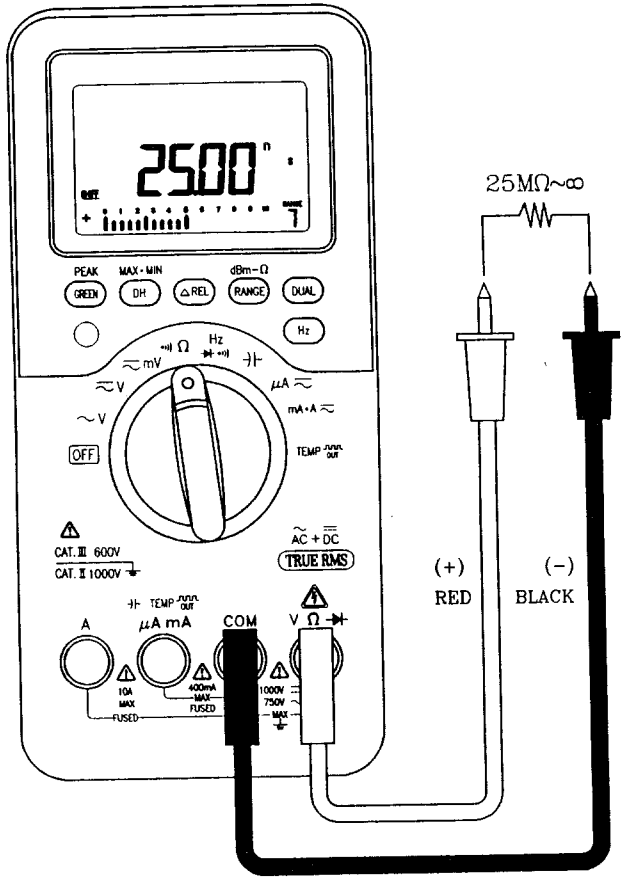

Figure 24. Conductance (nS) measurement.

☐ DIODE CHECK

A good diode allows current to flow in one direction only. To test a diode, turn the power off, remove the diode from the circuit, and proceed as follows:

1) Set the rotary switch to " ⊣⊢ •))) "position.
2) Connect the black test lead to "**COM**" terminal and red test lead to "**V Ω** ⊣⊢" terminal.
3) Touch the red lead to the positive side of the diode and the black lead to the negative side. The meter can display diode voltage drops to approximately 2.5 V. A typical voltage drop is 0.3 ~ 0.8 V, and the meter will sound a beep to remind user.
4) Reverse the probes and measure the voltage across the diode again. If the diode is:
   - **Good :** " **OL** " is displayed.
   - **Shorted :** Near 0 V drop is displayed in both directions, and the beeper sounds continuously.
   - **Open :** " **OL** " is displayed in both directions.
5) Repeat step 3 and 4 for other diodes.

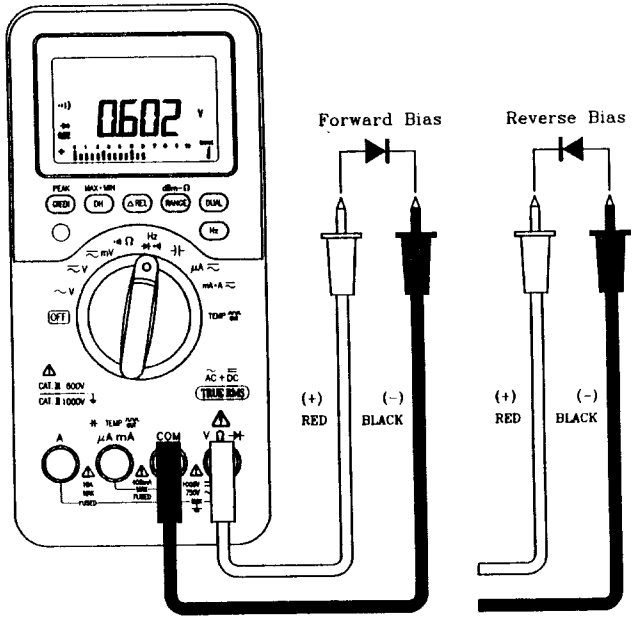

Figure 25. Diode measurement.

ManualsPlus.com

☐ 10MHz FREQUENCY COUNTER MEASUREMENT

1) Set the rotary switch to " ⊣▶ •))) "position.
2) Push **GREEN** button momentarily to enter frequency counter measurement.
3) The primary display shows test value and the secondary display shows "**-1-**". The "**-1-**" means signal divide 1.
4) Connect the black test lead to "**COM**" terminal and red test lead to " **V Ω** ⊣▶" terminal.
5) Touch the probe to signal and read the display.
6) If the reading is unstable or zero, push **DUAL** button momentarily to select signal divide 100. Now, the secondary display shows `**-100-**`.
7) Touch the probe to signal and read the display again. If the reading is still unstable, that means the signal is out of the specification.
8) The test range of divide 1 is from 1 Hz to 200kHz.
   The test range of divide 100 is from 50Hz to 10 MHz.
9) Push **Hz** button momentarily to step through Duty cycle, Pulse width and frequency measurements.

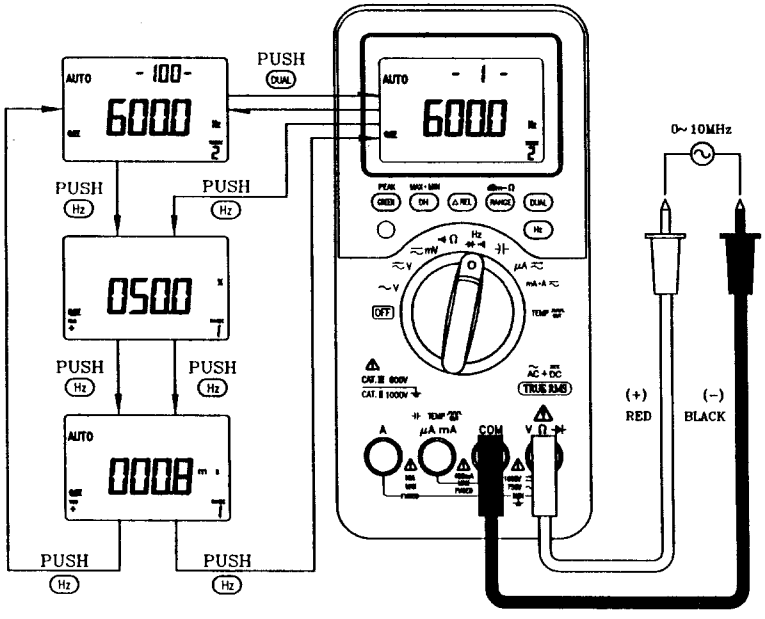

Figure 26. 10 MHz Frequency counter measurement.

☐ CAPACITANCE MEASUREMENT

1) Set the rotary switch to " ⊣⊢ " position
2) Connect the red lead to " ⊣⊢ Temp " terminal, and black lead in "COM" terminal.
3) Open the test probes, then push REL button momentarily to zero the residual.
4) Connect the test lead across the capacitor and read the display.

CAUTION: 1.Observe polarity when measuring the polarized capacitors.
2.Discharge capacitor before measurement.

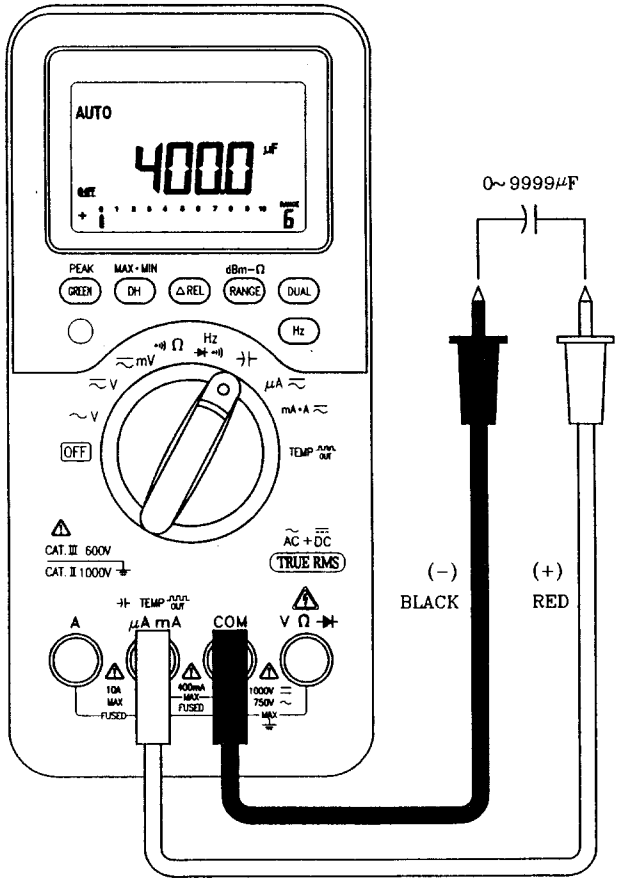

Figure 27. Capacitance measurement.

ManualsPlus.com

☐ mA MEASUREMENT

1) Set the rotary switch to " ≂ **mA · A** ".
2) Connect the black test lead to " **COM** " terminal and red test lead to "**µA mA**" terminal.
3) Touch the probes to the test points and read the display.
4) Push **GREEN** button momentarily to step through AC, AC+DC and DC test.

Key operation	Primary display	Secondary display
Push GREEN	AC mA	
Push GREEN	AC+DC mA	
Push GREEN	DC mA	

5) Push **DUAL** button momentarily to enter multi-display mode.
Below, the table is **DUAL** button operation for DC mA.

Key operation	Primary display	Secondary display
Push Dual	DC mA	Hz
Push Dual	DC mA	AC mA
Push Dual	DC mA	

Below, the table is **DUAL** button operation for AC mA.

Key operation	Primary display	Secondary display
Push Dual	AC mA	Hz
Push Dual	AC mA	DC mA
Push Dual	AC mA	

Below, the table is **DUAL** button operation for AC+DC mA.

Key operation	Primary display	Secondary display
Push Dual	AC+DC mA	Hz
Push Dual	AC+DC mA	AC mA
Push Dual	AC+DC mA	DC mA
Push Dual	AC+DC mA	

6) Push **Hz** button momentarily to enter frequency measurement and push this button again to step through Duty cycle, Pulse width and frequency measurements.

Key operation	Primary display	Secondary display
Push Hz	Hz	DC(AC, AC+DC) mA
Push Hz	%	DC(AC, AC+DC) mA
Push Hz	ms	DC(AC, AC+DC) mA
Push Hz and hold more than 1 second	DC(AC, AC+DC) mA	

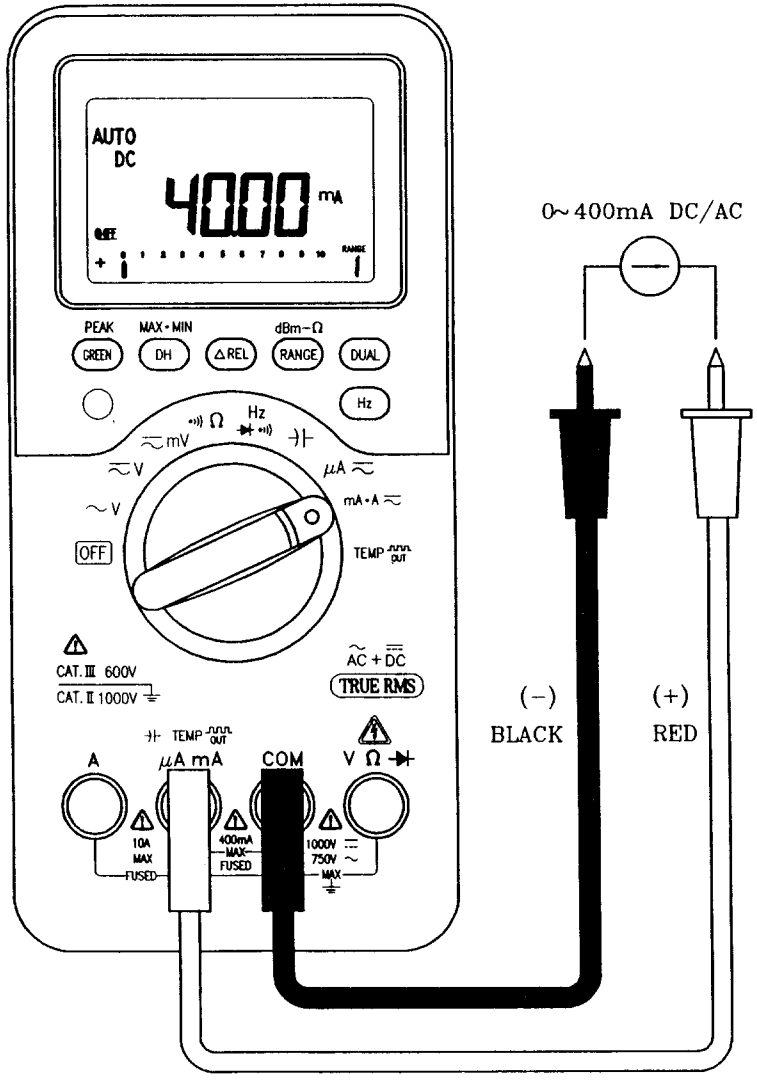

Figure 29. mA measurement.

ManualsPlus.com

☐ A MEASUREMENT

1) Set the rotary switch to " ≂ **mA · A** ".
2) Connect the black test lead to " **COM** " terminal and red test lead to "**A**" terminal.
3) Touch the probes to the test points and read the display.
4) Push **GREEN** button momentarily to step through AC, DC and AC+DC test.

Key operation	Primary display	Secondary display
Push GREEN	AC A	
Push GREEN	AC+DC A	
Push GREEN	DC A	

5) Push **DUAL** button momentarily to enter multi-display mode.
Below, the table is **DUAL** button operation for DC A.

Key operation	Primary display	Secondary display
Push Dual	DC A	Hz
Push Dual	DC A	AC A
Push Dual	DC A	

Below, the table is **DUAL** button operation for AC mA.

Key operation	Primary display	Secondary display
Push Dual	AC A	Hz
Push Dual	AC A	DC A
Push Dual	AC A	

Below, the table is **DUAL** button operation for AC+DC mA.

Key operation	Primary display	Secondary display
Push Dual	AC+DC A	Hz
Push Dual	AC+DC A	AC A
Push Dual	AC+DC A	DC A
Push Dual	AC+DC A	

6) Push **Hz** button momentarily to enter frequency measurement and push this button again to step through Duty cycle, Pulse width and frequency measurements.

Key operation	Primary display	Secondary display
Push Hz	Hz	DC(AC, AC+DC) A
Push Hz	%	DC(AC, AC+DC) A
Push Hz	ms	DC(AC, AC+DC) A
Push Hz and hold more than 1 second	DC(AC, AC+DC) A	

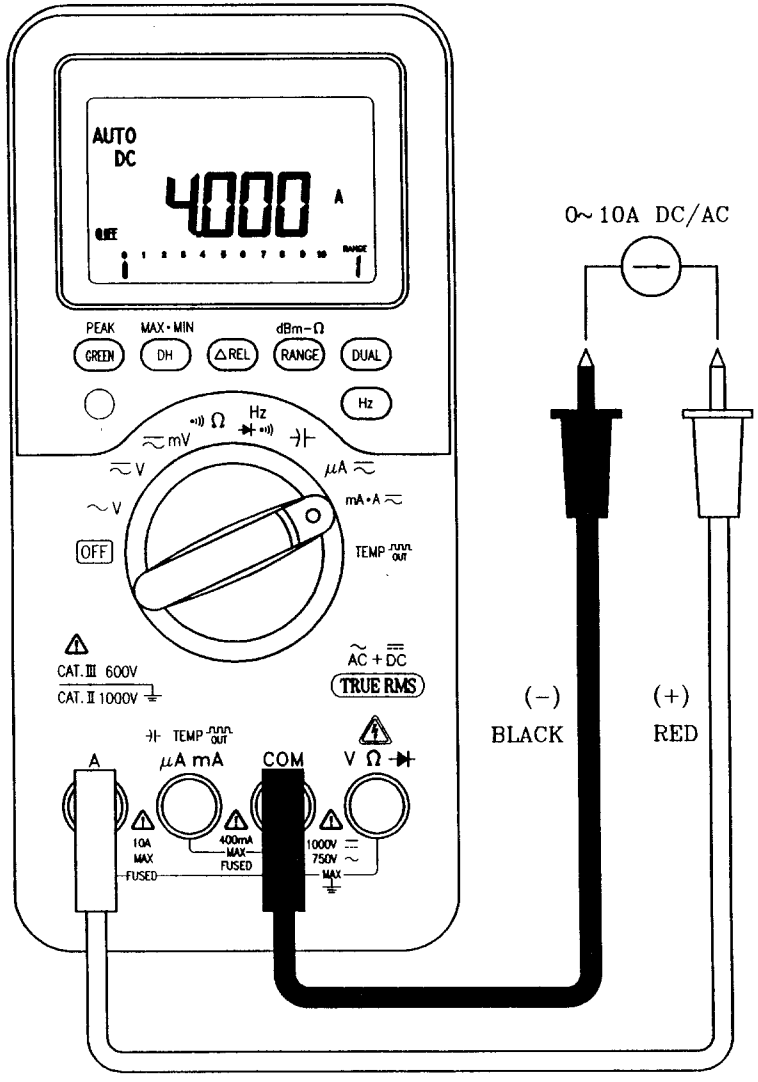

Figure 30. A measurement.

ManualsPlus.com

☐ Temperature MEASUREMENT

The DP-27 thermocouple that comes with the meter is suitable for making temperature measurements from -40°C(°F) to 204°C(399°F) in teflon-compatible environments. Above this temperature, toxic gas might be emitted. Do not immerse this thermocouple in liquids. For best results, use the thermocouple probe designed for each application (i.e., an immersion probe for liquid or gel, an air probe for air measurements, etc), follow the measuring techniques below:

- Clean the measurement surface and make sure the probe is attached securely to the surface.
- When measuring above ambient temperatures, move the thermocouple on the surface until you get the highest temperature reading.
- When measuring below ambient temperatures, move the thermocouple on the surface until you get the lowest temperature reading.

1) Turn the rotary switch to the "Temp OUT" range.
2) Plug the adapter (DP-26) with thermocouple probe (DP-27) into "Temp" (the plus side) and "COM" (the minus side) terminal.
3) Press **"DUAL"** button to toggle between °C (Celsius) and °F (Fahrenheit) on primary display.
4) Attach the thermocouple to the heated source.
5) Read the display.

CAUTION: Do not sharply bend the thermocouple leads.
Repeatedly bending the leads can break them.

NOTE : DP-27 is K-type thermocouple probe.
DP-26 is thermocouple adapter.

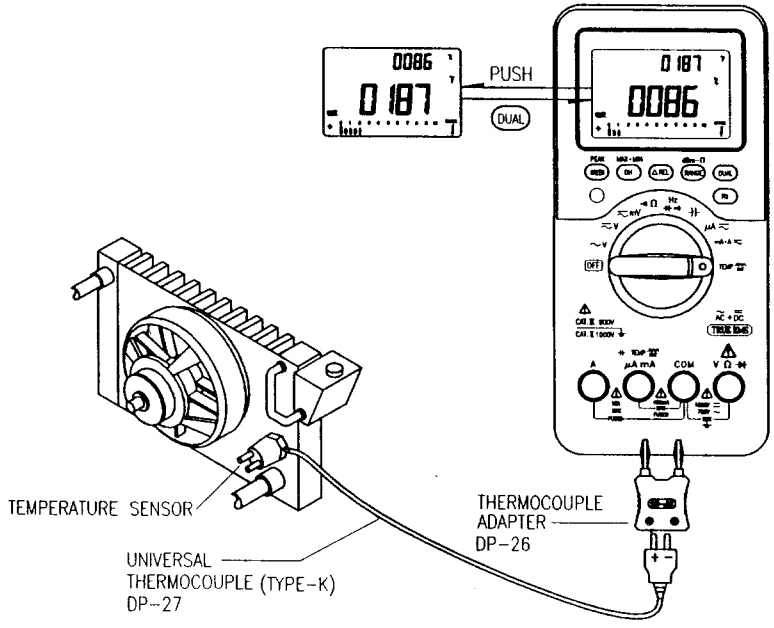

Figure 31. Surface temperature measurement.

ManualsPlus.com

☐ SQUARE WAVE OUTPUT

1) Turn the rotary switch to the "Temp OUT " range.
2) Push **GREEN** button momentarily to select square wave output function.
3) The default output: FREQUENCY= 600 Hz, Duty cycle = 50 %.
4) Push **Hz** button momentarily to select 16 kinds of frequency. Press and hold this button, the frequency selection will rolled up continuous.
5) Push **DUAL** button momentarily to adjust duty cycle of output frequency. Press and hold this button, the duty cycle adjustment will rolled up continuous.
6) The feature of auto power off will be disabled in this function.

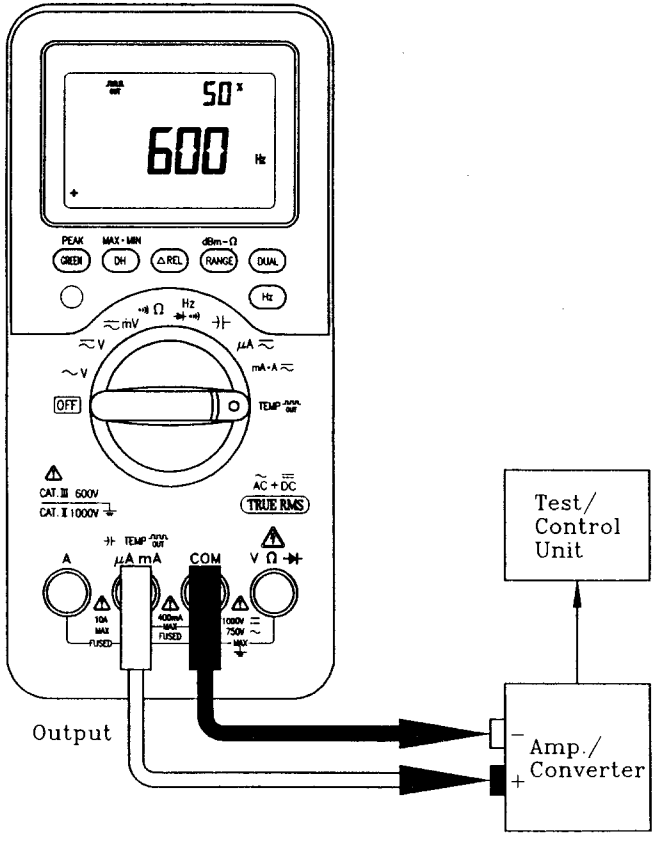

Figure 32. Square wave output.

☐ Timer + signal output

1) Turn the rotary switch to the "Temp OUT " range.
2) Push and hold **GREEN** button for 1 sec to select timer function.
3) The signal output is defined from Low level to High level. The secondary display shown " **Lo - Hi** " to indicate it.
4) Push **DUAL** button momentarily to select the status of signal output from High to Low level , Pulse of Low to High, Pulse of high to low and Low to High level outputs.
5) The primary display indicates the timer value and the unit is second(s). Push **DH** button momentarily to select which digits will be adjusted by Pushing the **REL** button.
6) Push **Hz** button momentarily to start timer after setting the timer. Push this button momentarily again to stop timer.
7) The meter will send a level (or pulse) and sound a beep after the timer reaches zero.
8) Push **GREEN** button momentarily to reset timer and output level. The timer will be reset to previous value defined by users. The output level will be reset to relative level.
9) The feature of auto power off will be disabled in this function.

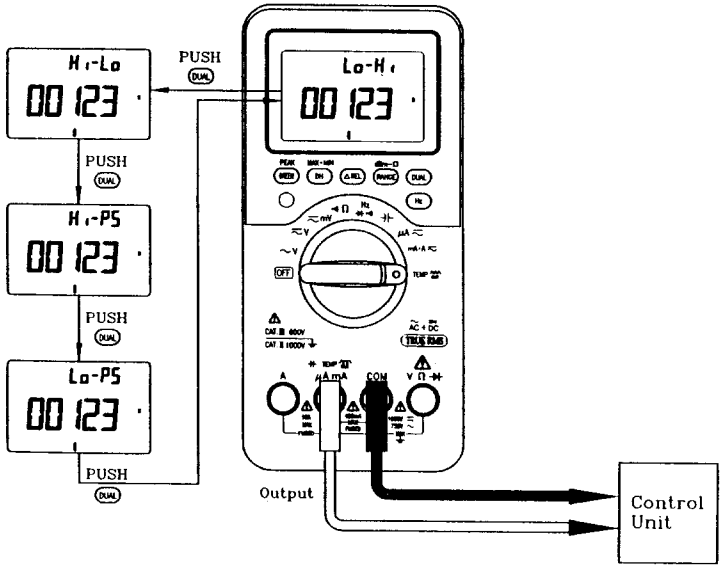

Figure 33. Timer and signal output

ManualsPlus.com

GENERAL SPECIFICATIONS

Model A

Display:
- Both of primary and secondary display are 4 3/4 digits liquid crystal display (LCD) with maximum reading of 4,000/40,000 adjustable.
- 21 segments analog bar graph and full annunciator
- Automatic polarity indication.

Function:
- DCV, ACV, DCA, ACA, OHM, Diode check, Audible continuity, Capacitor, Temperature, Frequency, Duty cycle and Pulse Width tests.
- A unique function is Square wave output with adjustable duty cycle.
- Including **AC+DC** true rms measurement for both voltage and current.
- 1 ms peak hold for easy glitch capture.
- Back-lit display for easy reading in the dark.

Measuring rate:
- 3 times per second for 4,000 counts.
- 1 time per second for 40,000 counts.
- 1 time per second for frequency measurement.
- 0.25 ~4 times per second for Duty Cycle and Pulse Width measurements.

Low battery indicator: The "[+-]" appears when the battery voltage drops below 7.2V (approx.).

Operating temperature: 0°C to 50 °C, 0 - 80 % R.H.

Storage temperature: -20°C to 60°C, 0 - 80 % R.H. with BATTERY REMOVED.

Temperature coefficient: 0.15 * (specified accuracy) / °C (from 0°C to 18°C or 28°C to 50°C)

Power supply: Single standard NEDA1604, JIS006P,IEC6F22 carbon-zinc or alkaline type 9V battery.

Dimension: 37 (H) * 90 (W) * 192 (L) mm.

Weight: 940 grams with batteries included.

Standard Accessories: Test leads (a pair), manual, battery, protective holster

Optional Accessories: RS232C package, K-type adapter and Thermocouple probe.

Model B

Display:
- Both primary and secondary display are 4 3/4 digits liquid crystal display (LCD) with maximum reading of 4,000/40,000 adjustable.
- 21 segments analog bar graph and full annunciator
- Automatic polarity indication.

Function:
- DCV, ACV, DCA, ACA, OHM, Diode check, Audible continuity, Capacitor, Frequency tests.

Measuring rate:
- 3 times per second for 4,000 counts.
- 1 time per second for 40,000 counts.
- 1 time per second for frequency measurement.

Low battery indicator: The "[+-]" appears when the battery voltage drops below 7.2V (approx.).

Operating temperature: 0°C to 50 °C, 0 - 80 % R.H.

Storage temperature: -20°C to 60°C, 0 - 80 % R.H. with BATTERY REMOVED.

Temperature coefficient: 0.15 * (specified accuracy) / °C (from 0°C to 18°C or 28°C to 50°C)

Power supply: Single standard NEDA1604, JIS006P,IEC6F22 carbon-zinc or alkaline type 9V battery.

Dimension: 37 (H) * 90 (W) * 192 (L) mm.

Weight: 940 grams with batteries included.

Standard Accessories: Test leads (a pair), manual, battery, protective holster

Optional Accessories: RS232C package.

ManualsPlus.com

ELECTRICAL SPECIFICATIONS

Accuracy is given as ±(% of reading + no. of least significant digits) at 23°C ± 5°C, with relative humidity Less than 80% R.H.
In the 4 3/4 digit mode, multiply the number of least significant digits(dgt) by 10.

Model A

☐ DC VOLTAGE

Range	Resolution	Accuracy	Overload Protection
40mV	10 µV/ 1µV	±(0.08%rdg+5dgt)	600V DC or AC rms
400mV	0.1mV/10µV	±(0.06%rdg+3dgt)	1200V DC or 850V AC rms
4V	1mV /0.1mV		
40V	10mV/1mV		
400V	0.1V/10mV		
1000V	1V/0.1V		

• Input Impedance: 10MΩ (1000 MΩ for 40mV and 400mV)

☐ AC VOLTAGE (TRUE RMS : From 5% to 100% of range.)

Range	Resolution	Accuracy			Overload Protection
		50/60Hz	45Hz ~5k Hz	5kHz~20kHz	
40mV	10µV/1µV	±(0.7%rdg +5dgt)	±(1.5%rdg+5dgt)	±(2%rdg+5dgt)	600V DC or AC rms
400mV	0.1mV/10µV				1200V DC or 850V AC rms
4V	1mV/0.1mV				
40V	10mV/1mV				
400V	0.1V/10mV				
750V	1V/0.1V		±(3%rdg+5dgt)	NO SPEC.	

• Input Impedance: 10MΩ // less than 100pF(1000MΩ for 40mV and 400mV)
Crest factor: <3

☐ AC+DC VOLTAGE (TRUE RMS : From 5% to 100% of range.)

Range	Resolution	Accuracy			Overload Protection
		50/60Hz	45Hz ~5k Hz	5kHz~20kHz	
40mV	10µV/1µV	±(0.8%rdg +10dgt)	±(1.6%rdg +10dgt)	±(2.1%rdg +10dgt)	600V DC or AC rms
400mV	0.1mV/10µV				1200V DC or 850V AC rms
4V	1mV/0.1mV				
40V	10mV/1mV				
400V	0.1V/10mV				
750V	1V/0.1V		±(3%rdg+10dgt)	NO SPEC.	

• Input Impedance: 10MΩ // less than 100pF(1000MΩ for 40mV and 400mV)
Crest factor: < 3

☐ DC CURRENT

Range	Resolution	Accuracy	Burden Voltage and shunt	Overload Protection
400 µA	0.1 µA/10nA	±(0.2%rdg+3dgt)	0.04 V (100Ω)	1A/600 V, High Energy Fuse
4000 µA	1 µA/0.1µA		0.4 V (100Ω)	
40 mA	10 µA/1µA		0.08V (1Ω)	
400 mA	0.1 mA/10µA		0.8 V (1Ω)	
4 A	1mA/0.1mA		0.3 V (0.01Ω)	15 A/600 V, High Energy Fuse
10 A	10mA/1mA		0.6 V (0.01Ω)	

• 10 A continuous, 20A for 30 seconds maximum.

☐ AC CURRENT (TRUE RMS: From 5% to 100% of range.)

Range	Resolution	Accuracy 45Hz ~ 2kHz	Burden Voltage and shunt	Overload Protection
400 µA	0.1 µA/10nA	±(1.0%rdg+5dgt)	0.04 V (100Ω)	1A/600 V, High Energy Fuse
4000 µA	1 µA/0.1µA		0.4 V (100Ω)	
40 mA	10 µA/1µA		0.08V (1Ω)	
400 mA	0.1 mA/10µA		0.8V (1Ω)	
4 A	1mA/0.1mA		0.3 V (0.01Ω)	15 A/600 V, High Energy Fuse
10 A	10mA/1mA		0.6 V (0.01Ω)	

• 10 A continuous, 20A for 30 seconds maximum.
• Crest factor: <3

☐ AC+DC CURRENT (TRUE RMS: From 5% to 100% of range.)

Range	Resolution	Accuracy 45Hz ~ 2kHz	Burden Voltage and shunt	Overload Protection
400 µA	0.1 µA/10nA	±(1.2%rdg+10dgt)	0.04 V (100Ω)	1A/600 V, High Energy Fuse
4000 µA	1 µA/0.1µA		0.4 V (100Ω)	
40 mA	10 µA/1µA		0.08V (1Ω)	
400 mA	0.1 mA/10µA		0.8V (1Ω)	
4 A	1mA/0.1mA		0.3 V (0.01Ω)	15 A/600 V, High Energy Fuse
10 A	10mA/1mA		0.6 V (0.01Ω)	

• 10 A continuous, 20A for 30 seconds maximum.
• Crest factor: <3

ManualsPlus.com

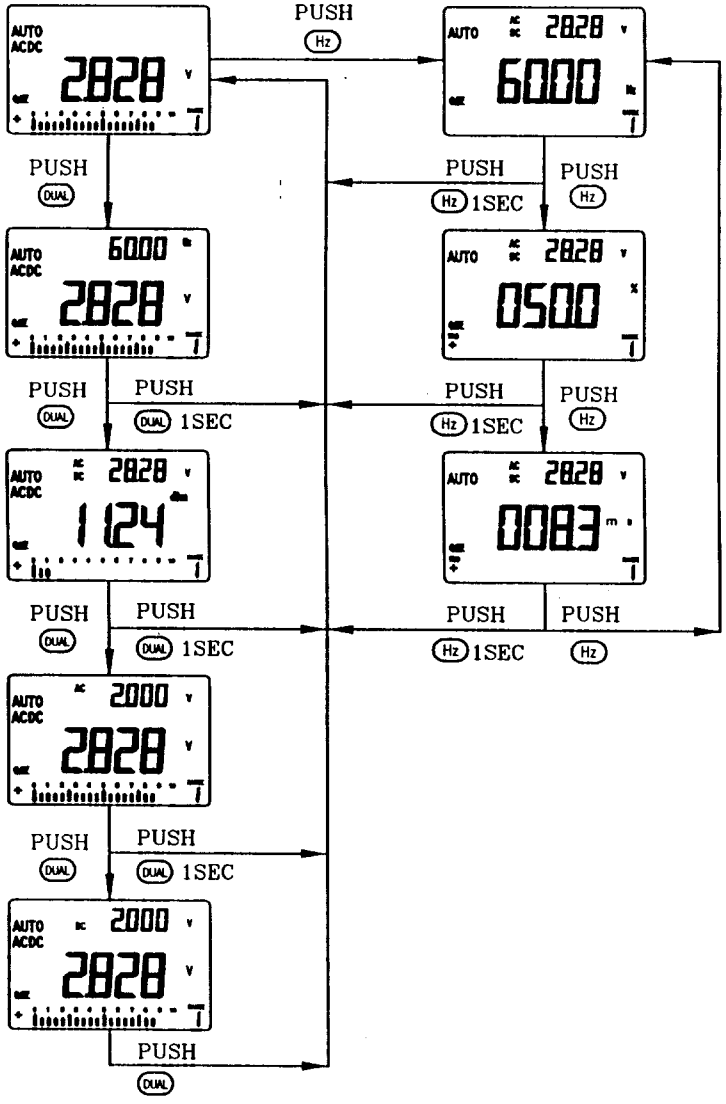

Figure 21. DUAL and Hz buttons operation for AC+DC voltage.

☐ mV MEASUREMENT

1) Set the rotary switch to " ⏦ **mV** ".
2) Connect the black test lead to " **COM** " terminal and red test lead to "**V Ω** ⊣⊢" terminal.
3) Touch the probes to the test points and read the display.
4) Push **GREEN** button momentarily to step through AC, AC+DC and DC test.

Key operation	Primary display	Secondary display
Push GREEN	AC mV	
Push GREEN	AC+DC mV	
Push GREEN	DC mV	

5) Push **DUAL** button momentarily to enter multi-display mode.
Below, the table is **DUAL** button operation for DC mV.

Key operation	Primary display	Secondary display
Push Dual	DC mV	Hz
Push Dual	dBm	DC mV
Push Dual	DC mV	AC mV
Push Dual	DC mV	

Below, the table is **DUAL** button operation for AC mV.

Key operation	Primary display	Secondary display
Push Dual	AC mV	Hz
Push Dual	dBm	AC mV
Push Dual	AC mV	DC mV
Push Dual	AC mV	

Below, the table is **DUAL** button operation for AC+DC mV.

Key operation	Primary display	Secondary display
Push Dual	AC+DC mV	Hz
Push Dual	dBm	AC+ DC mV
Push Dual	AC+DC mV	AC mV
Push Dual	AC+DC mV	DC mV
Push Dual	AC+DC mV	

6) Push **Hz** button momentarily to enter frequency measurement and push this button again to step through Duty cycle, Pulse width and frequency measurements.

Key operation	Primary display	Secondary display
Push Hz	Hz	DC(AC, AC+DC) mV
Push Hz	%	DC(AC, AC+DC) mV
Push Hz	ms	DC(AC, AC+DC) mV
Push Hz and hold more than 1 second	DC(AC, AC+DC) mV	

ManualsPlus.com

☐ FREQUENCY for Voltage measurement

Range	Resolution	Accuracy	Min. Input Freq.
100Hz	0.01/0.001Hz	±(0.02%rdg+1dgt)	10Hz
1kHz	0.1/ 0.01Hz		
10kHz	1/0.1Hz		
100kHz	10/1 Hz		
200kHz	100/10Hz		

• Overload protection: 1200V DC/ 850Vrms AC; < 1000000 V×Hz

FREQUENCY SENSITIVITY		
INPUT RANGE	MINIMUM SENSITIVITY (RMS SINEWAVE)	
(Maximum input for specified accuracy = 10 x Range or 1000V)	40 Hz-20 kHz	10 Hz-200 kHz
40 mV	10mV	NO SPEC.
400 mV	30mV	40mV
4V	0.3V	0.4V
40V	3V	4V
400V	30V	40V (≤100 kHz)
1000V	300V	400V (≤100 kHz)

The accuracy for duty cycle and pulse width is based a 5V square wave input on the 4V dc range.

DUTY CYCLE 5.0 to 95.0 %

Accuracy: Within ± (0.3% per kHz + 0.3%) of full scale

PULSE WIDTH 0.1 ms to 1999 ms

Accuracy: ± (0.2%rdg +3dgt), pulse width must be greater than 10μs.

Pulse width range is determined by the frequency of the signal.

☐ FREQUENCY COUNTER

Divide 1: (Secondary display show " - 1 - ")

Range	Resolution	Accuracy	Sensitivity	Min. Input Freq.
100Hz	0.01/0.001Hz	±(0.002%rdg+1dgt)	100mV rms	1Hz
1kHz	0.1/0.01Hz			
10kHz	1/0.1Hz			
100kHz	10/1 Hz			
200kHz	100/10Hz			

Divide 100: (Secondary display show "- 100 - ")

Range	Resolution	Accuracy	Sensitivity	Min. Input Freq.
100Hz	0.01/0.001Hz	±(0.002%rdg+1dgt)	100mV rms	50Hz
1kHz	0.1/0.01Hz			
10kHz	1/0.1Hz			
100kHz	10/1 Hz			
1MHz	100/10Hz		500mV rms	
10MHz	1k/100Hz			

The accuracy for duty cycle and pulse width is based a 5V square wave input.

DUTY CYCLE 0.1% to 99.9 %

Accuracy: Within ± (0.3% per kHz + 0.3%) of full scale for 5V Square wave input.

PULSE WIDTH 0.1ms to 1999ms

Accuracy: ± (0.2%rdg +3dgt), pulse width must be greater than 10μs.

Pulse width range is determined by the frequency of the signal.

☐ K -TYPE TEMPERATURE TEST

RANGE	Resolution	Accuracy	Overload Protection
-40°C ~ 1372°C	1°C	±(0.3%rdg+3°C)	600 V DC/AC rms
-40°F ~ 2502°F	1°F	±(0.3%rdg+6°F)	

• The accuracy does not include the tolerance of thermocouple probe (DP-27).

• The accuracy of thermocouple probe (DP-27) is shows as below:
Temperature Rating (wire): Continuous 204°C, Single reading 260°C
Temperature Measuring Range:-50°C to +800°C (MAX).
Accuracy:
±2.2°C or ±0.75% of reading from 0°C to 800°C(whichever is greater)
±2.2°C or ±2% of reading from 0°C to -50°C(whichever is greater)

☐ SQUARE WAVE OUTPUT

Frequency types: 0.5Hz, 1Hz, 2Hz, 10Hz, 50Hz, 60Hz, 75Hz, 100Hz, 150Hz, 200Hz, 300Hz, 600Hz, 1200Hz, 1600Hz, 2400Hz, 4800Hz.
Duty Cycle adjustable: 1 % to 99 %, **Accuracy:** ± 1 %
Amplitude: Fixed amplitude 0V to +3V(±0.2V).
Output Impedance: 3.5kΩ maximum

☐ Timer + signal output

Maximum timer: 99,999 sec
Amplitude: Fixed amplitude 0V to +3V(±0.2V).
Output Impedance: 3.5kΩ maximum
Output signal:

1. High to Low Level (3V to 0V)
2. Low pulse output (pulse width: 0.8 ~ 6.67 ms approx.)
3. Low to High Level (0V to 3V)
4. High pulse output (pulse width: 0.8 ~ 6.67 ms approx.)

ManualsPlus.com

Model B

☐ DC VOLTAGE

Range	Resolution	Accuracy	Overload Protection
40mV	10 μV/ 1μV	±(0.08%rdg+5dgt)	600V DC or AC rms
400mV	0.1mV/10μV	±(0.06%rdg+3dgt)	1200V DC or 850V AC rms
4V	1mV /0.1mV		
40V	10mV/1mV		
400V	0.1V/10mV		
1000V	1V/0.1V		

• Input Impedance: 10MΩ (1000 MΩ for 40mV and 400mV)

☐ AC VOLTAGE (TRUE RMS: From 5% to 100% of range.)

Range	Resolution	Accuracy		Overload Protection
		50/60Hz	45Hz ~1k Hz	
40mV	10μV/1μV	±(0.7%rdg +5dgt)	±(1.5%rdg+5dgt)	600V DC or AC rms
400mV	0.1mV/10μV			
4V	1mV/0.1mV			1200V DC or 850V AC rms
40V	10mV/1mV			
400V	0.1V/10mV			
750V	1V/0.1V			

• Input Impedance: 10MΩ // less than 100pF(1000MΩ for 40mV and 400mV)

☐ DC CURRENT

Range	Resolution	Accuracy	Burden Voltage and shunt	Overload Protection
400 μA	0.1 μA/10nA	±(0.2%rdg+3dgt)	0.04 V (100Ω)	1A/600 V, High Energy Fuse
4000 μA	1 μA/0.1μA		0.4 V (100Ω)	
40 mA	10 μA/1μA		0.08 V (1Ω)	
400 mA	0.1 mA/10μA		0.8 V (1Ω)	
4 A	1mA/0.1mA		0.3 V (0.01Ω)	15 A/600 V, High Energy Fuse
10 A	10mA/1mA		0.6 V (0.01Ω)	

• 10 A continuous, 20A for 30 seconds maximum.

☐ AC CURRENT(TRUE RMS: From 5% to 100% of range.)

Range	Resolution	Accuracy 45Hz ~ 1kHz	Burden Voltage and shunt	Overload Protection
400 μA	0.1 μA/10nA	±(1.0%rdg+5dgt)	0.04 V (100Ω)	1A/600 V, High Energy Fuse
4000 μA	1 μA/0.1μA		0.4 V (100Ω)	
40 mA	10 μA/1μA		0.08 V (1Ω)	
400 mA	0.1 mA/10μA		0.8 V (1Ω)	
4 A	1mA/0.1mA		0.3 V (0.01Ω)	15 A/600 V, High Energy Fuse
10 A	10mA/1mA		0.6 V (0.01Ω)	

• 10 A continuous, 20A for 30 seconds maximum.

☐ RESISTANCE

Range	Resolution	Accuracy	MAX. Test Voltage	Overload Protection
400Ω	0.1/0.01Ω	±(0.2%rdg+3dgt)	3.3V	600V DC/ AC rms
4kΩ	1/0.1Ω		1.28V	
40kΩ	10/ 1Ω			
400kΩ	100/10Ω			
4MΩ	1/0.1kΩ			
40MΩ	10/1kΩ	±(1%rdg+5dgt)		

• Instant Continuity: Built-in buzzer sounds when resistance is less than 10.0Ω

☐ CAPACITOR

Range	Resolution	Accuracy	Overload Protection
4 nF	1 pF	±(2.5%rdg+6dgt)	600V DC/ AC rms
40 nF	10 pF		
400 nF	0.1 nF	±(2%rdg+4dgt)	
4μF	1 nF		
40 μF	10 nF		
400 μ F	0.1μF		
9999 μF	1 μF	±(3%rdg+4dgt), >2mF, NO Spec.	

• With film capacitor or better, use Relative mode to zero residual.

☐ DIODE CHECK

Range	Resolution	Accuracy	Test Current	Test Voltage
Diode	1mV	±(1.0%rdg+2dgt)	approx. 1.65mA	<3.3V

• Overload protection: 600V DC/rms AC

ManualsPlus.com

☐ AUDIBLE CONTINUITY TEST

Range	Resolution	Accuracy	Test Current	Test Voltage
Diode	1mV	built-in buzzer sounds when reading is below approx. 100 mV	approx. 1.65mA	<3.3V

• Overload protection: 600V DC/rms AC

☐ FREQUENCY for Voltage measurement

Range	Resolution	Accuracy	Min. Input Freq.
100Hz	0.001Hz	±(0.02%rdg+1dgt)	10Hz
1kHz	0.01Hz		
10kHz	1Hz		
100kHz	10 Hz		
200kHz	100Hz		

• Overload protection: 1200V DC/ 850Vrms AC; < 1000000 V×Hz

FREQUENCY SENSITIVITY		
INPUT RANGE	MINIMUM SENSITIVITY (RMS SINEWAVE)	
(Maximum input for specified accuracy = 10 x Range or 1000V)	40 Hz-20 kHz	10 Hz-200 kHz
40 mV	10mV	NO SPEC.
400 mV	30mV	40mV
4V	0.3V	0.4V
40V	3V	4V
400V	30V	40V (≤100 kHz)
1000V	300V	400V (≤100 kHz)

ACCESSORIES and REPLACEMENT PARTS

STANDARD ACESSORIES:

P/N	Description
194-046-9-001	Fuse, F1A, 600V RMS
194-047-9-001	Fuse, F15A, 600V RMS

OPTIONAL ACCESSORIES:

P/N	Description
TL-200	Deluxe Replacement Silicone Test Lead Kit
TL-120	Deluxe Replacement Silicone Test Leads
AK-2880A	AK-2880A Communication Package (includes cable and DOS software.)
TP-A	K-type Transition Temperature Adapter for the 2890 (requires K-type thermal couple)
TP-30B	Temperature Adapter for the 2880A (requires K-type thermal couple)
TP-3	K-type Bead Probe
TP3014	K-type Surface Probe
TP3001	K-type Needle Probe

ManualsPlus.com

MAINTENANCE

WARNING

To avoid electrical shock, do not perform any service unless you are qualified to do so.

☐ SERVICE

If the instrument fails to operate, check battery and test leads etc., and replace them if necessary. If the instrument still does not work, double check operating procedure as described in this instruction manual. When servicing, use specified replacement parts only.

WARNING

To avoid electrical shock or damage to the meter, do not get water inside the case. Remove the test leads and any input signals before opening the case.

☐ BATTERY REPLACEMENT

The meter is powered by a single 9V battery, with NEDA1604, JIS006P, IEC6F22 carbon-zinc or alkaline battery. Replace battery if the low battery sign (▭) is displayed and flashes. Use the following procedures to replace the battery:

1. Using the rotary switch to turn the meter off, and disconnect the test leads from external equipment.
2. Loosen 3 screws on bottom cover, pull up and move the cover. See **Figure 34**.
3. Replace the defective battery.
4. Reverse the procedure of opening cover to close the bottom cover.

☐ FUSE REPLACEMENT

Referring to **Figure 34 and 35**, use the following procedure to examine or replace the fuses of the meter:

1. Perform steps 1 to 2 of battery replacement procedure.
2. Lift the circuit board as shown in **Figure 35**.
3. Remove the defective fuse by gently prying one end of the fuse loose and sliding the fuse out of the fuse bracket.
4. Install a new fuse of the same size and rating. Make sure the new fuse is centered in the fuse holder.
5. Ensure that the rotary switch on top case and the switch on the circuit board are in the **OFF** position.
6. Then re-fasten the circuit board and the bottom cover respectively.

☐ CLEANING

To clean the instrument, use a soft cloth dampened in a solution of mild detergent and water. Do not spray cleaner directly onto the instrument, since it may leak into the cabinet and cause damage.
Do not use chemicals containing benzine, benzene, toluene, xylene, acetone or similar solvents.

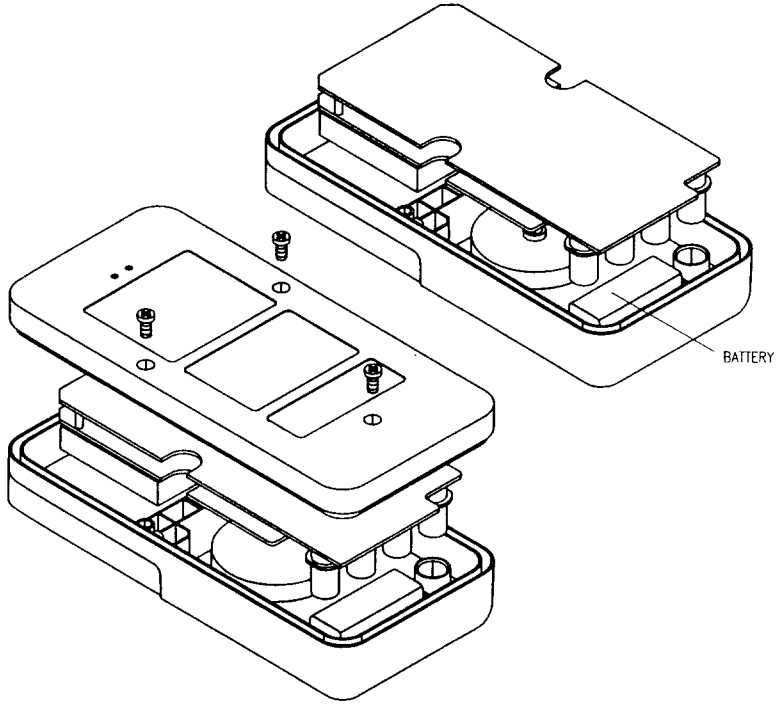

Figure 34. Battery replacement.

ManualsPlus.com

MAINTENANCE

WARNING

To avoid electrical shock, do not perform any service unless you are qualified to do so.

☐ SERVICE

If the instrument fails to operate, check battery and test leads etc., and replace them if necessary. If the instrument still does not work, double check operating procedure as described in this instruction manual. When servicing, use specified replacement parts only.

WARNING

To avoid electrical shock or damage to the meter, do not get water inside the case. Remove the test leads and any input signals before opening the case.

☐ BATTERY REPLACEMENT

The meter is powered by a single 9V battery, with NEDA1604, JIS006P, IEC6F22 carbon-zinc or alkaline battery. Replace battery if the low battery sign (▭) is displayed and flashes. Use the following procedures to replace the battery:

1. Using the rotary switch to turn the meter off, and disconnect the test leads from external equipment.
2. Loosen 3 screws on bottom cover, pull up and move the cover. See **Figure 34**.
3. Replace the defective battery.
4. Reverse the procedure of opening cover to close the bottom cover.

☐ FUSE REPLACEMENT

Referring to **Figure 34 and 35**, use the following procedure to examine or replace the fuses of the meter:

1. Perform steps 1 to 2 of battery replacement procedure.
2. Lift the circuit board as shown in **Figure 35**.
3. Remove the defective fuse by gently prying one end of the fuse loose and sliding the fuse out of the fuse bracket.
4. Install a new fuse of the same size and rating. Make sure the new fuse is centered in the fuse holder.
5. Ensure that the rotary switch on top case and the switch on the circuit board are in the **OFF** position.
6. Then re-fasten the circuit board and the bottom cover respectively.

☐ CLEANING

To clean the instrument, use a soft cloth dampened in a solution of mild detergent and water. Do not spray cleaner directly onto the instrument, since it may leak into the cabinet and cause damage.
Do not use chemicals containing benzine, benzene, toluene, xylene, acetone or similar solvents.

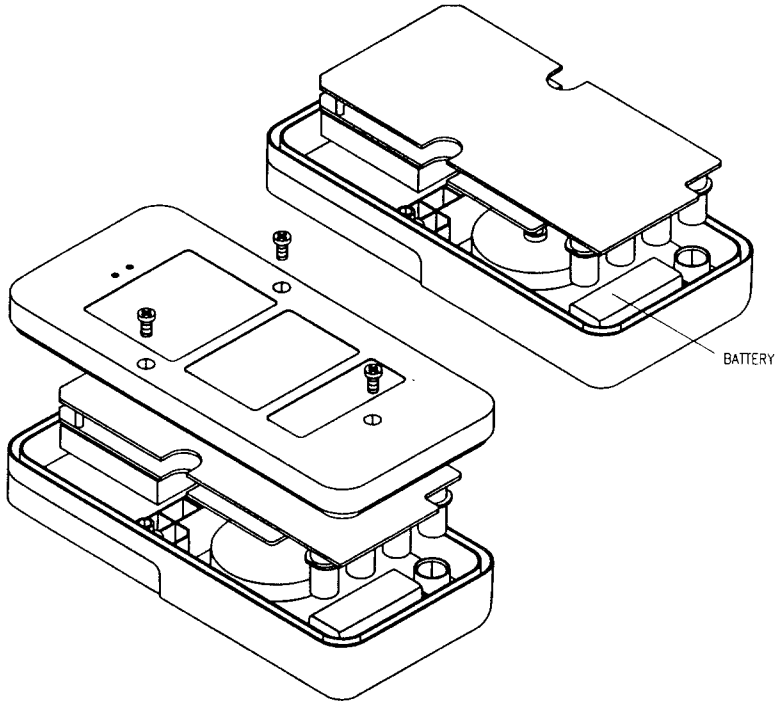

Figure 34. Battery replacement.

ManualsPlus.com

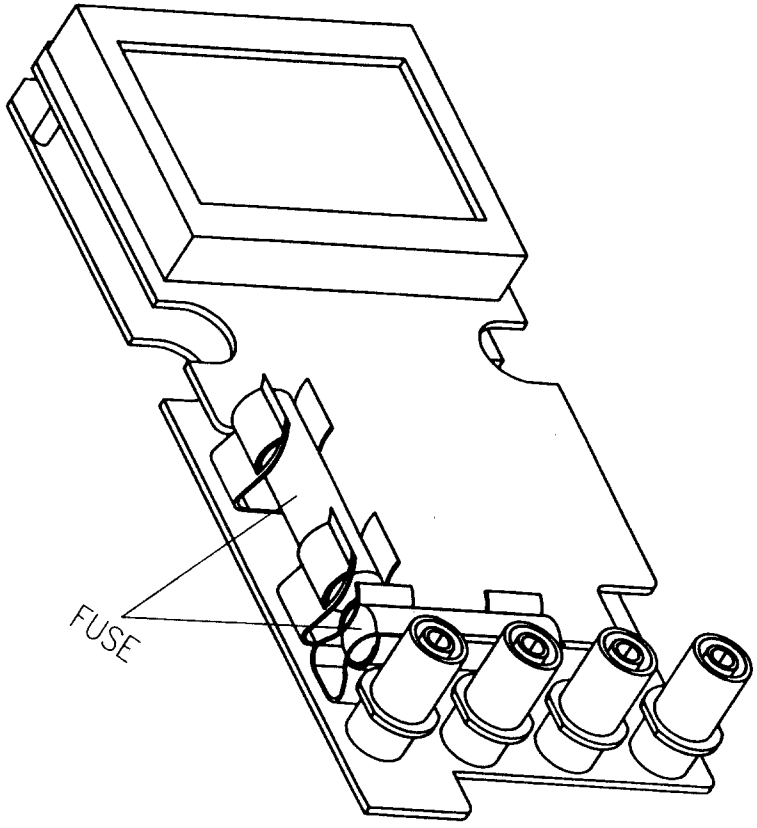

Figure 35. Fuse replacement.

ManualsPlus.com

Service Information

Warranty Service: Please return the product in the original packaging with proof of purchase to the below address. Clearly state in writing the performance problem and return any leads, connectors and accessories that you are using with the device.

Non-warranty Service: Please return the product in the original packaging with proof of purchase to the below address. Clearly state in writing the performance problem and return any leads, connectors and accessories that you are using with the device. Customers not on open account must include payment in the form of money order or credit card. For the most current repair charges contact the factory before shipping the product.

Return all merchandise to B&K Precision Corp. with pre-paid shipping. The flat-rate repair charge includes return shipping to locations in North America. For overnight shipments and non North America shipping fees contact B&K Precision Corp..

B&K Precision Corp.
1031 Segovia Circle
Placentia, CA 92870
Phone: 714-237-9220
Facsimile: 714-237-9214

Include with the instrument your complete return shipping address, contact name, phone number and description of problem.