ManualsPlus.com

IT-E151 RACK MOUNT KIT

WARRANTY

We warranty that the products that it manufactures and sells will be from defects in materials and workmanship for a period of one 1 year from the date of shipment. If a product proves defective within the respective period, we will provide repair or replacement as described in the complete warranty statement.

To arrange for service or obtain a copy of the complete warranty statement, please contact us at your free.

EXPECT AS PROVIDED IN THIS SUMMARY OR THE APPLICABLE WARRANTY STATEMENT, WE MAKE NO WARRANTY OF ANY KIND, EXPRESS OR IMPLIED, INCLUDING WITHOUT LIMITATION THE IMPLIED WARRANTIES OF MERCHANTABILITY AND FITNESS FOR A PARTICULAR PURPOSE. IN NO CONSEQUENTIAL DAMAGES.

IT-E151 Rackmount Kit
IT-E151 is designed for use for use with the BK 178X series power supply, 8500 series electronic load instrument.

To Rack Mount the Instrument

You can mount the power supply in a standard 19-inch rack cabinet using the IT-E151 rack mount kit.

Note: Remove the carrying handle and the two plastic ears before rack-mounting the instrument. To remove the handle, grasp the handle by sides and pull outwards and rotate it to a special position to let the arrow on the handle and the arrow on the plastic ears be in opposite directions, then pull the handle outward. After removing the handle, you can use a screwdriver to remove the two plastic ears.

BK PRECISION®

ManualsPlus.com

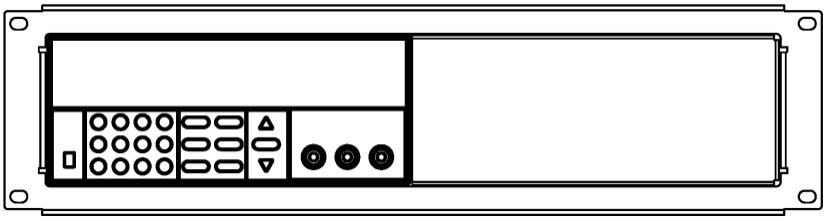

To rack mount a single instrument, order rack mount kit IT-E151

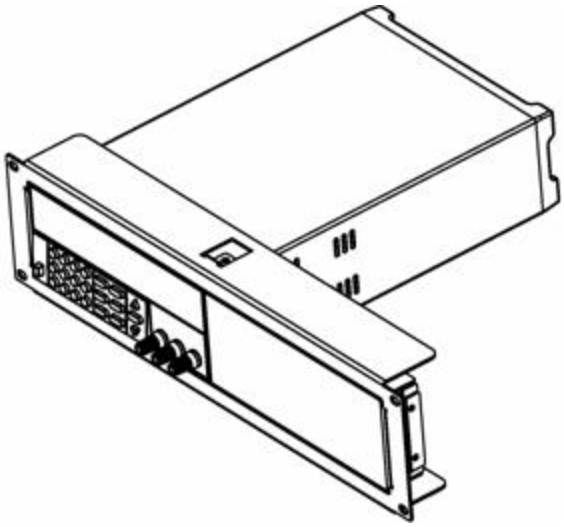

Side view of rack m ounting a single instrument

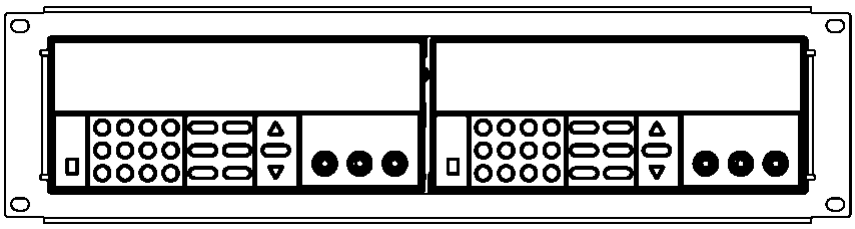

To rack mount two instruments side -by-side, order rack mount kit IT-E151, you needn't to use the front cover panel.

BK PRECISION®

ManualsPlus.com

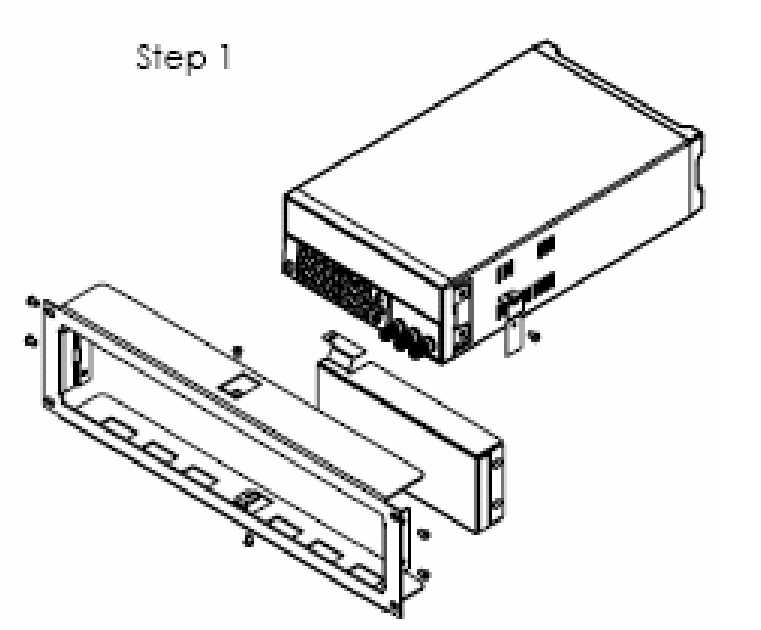

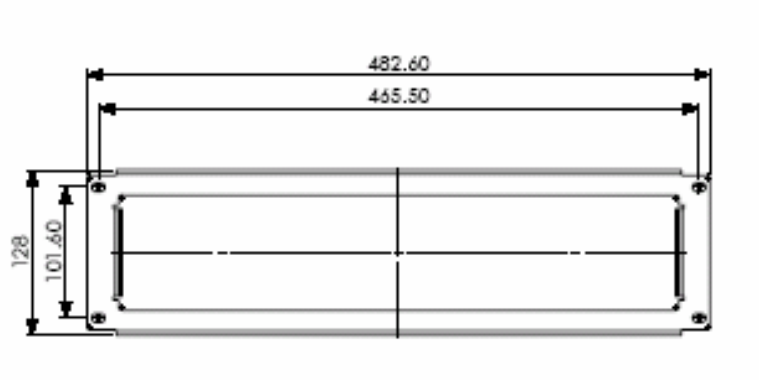

Dimension **unit (mm)**

Warning

These instructions are for qualified personnel only. To avoid personal injury, do not assemble or install this rack mount unless you are qualified to do so.

BK PRECISION®