ManualsPlus.com

BK PRECISION®

MDL Series Programmable DC Electronic Load

Models: MDL001, MDL002, MDL200, MDL252, MDL305, MDL400, MDL505, MDL600

PROGRAMMING GUIDE

ManualsPlus.com

Safety Summary

The following general safety precautions must be observed during all phases of operation of this instrument. Failure to comply with these precautions or with specific warnings elsewhere in this manual violates safety standards of design, manufacture, and intended use of the instrument. We assume no liability for the customer’s failure to comply with these requirements.

ENVIRONMENTAL CONDITIONS
This instrument is intended for indoor use, pollution degree 2 environments. It is designed to operate at a maximum relative humidity of 95% and at altitudes of up to 2000 meters. Refer to the specifications tables for the AC mains voltage requirements and ambient operating temperature range.

BEFORE APPLYING POWER
Verify that all safety precautions are taken. Note the instrument's external markings described under "Safety Symbols".

GROUND THE INSTRUMENT
This product is a Safety Class 1 instrument (provided with a protective earth terminal). To minimize shock hazard, the instrument chassis and cover must be connected to an electrical ground. The instrument must be connected to the AC mains power through a grounded power cable, with the ground wire firmly connected to an electrical ground (safety ground) at the power outlet. Note: Any interruption of the protective (grounding) conductor or disconnection of the protective earth terminal will cause a potential shock hazard that could result in personal injury.

DO NOT OPERATE IN AN EXPLOSIVE ATMOSPHERE
Do not operate the instrument in the presence of fumes or flammable gases.

KEEP AWAY FROM LIVE CIRCUITS
Operating personnel must not remove instrument covers except as instructed in this guide for installing or removing electronic load modules. Component replacement and internal adjustments must be made only by qualified service personnel. Do not replace components with power cable connected. Under certain conditions dangerous voltages may exist even with the power cable removed. To avoid injuries, always disconnect power, discharge circuits, and remove external voltage sources before touching components.

DO NOT SERVICE OR ADJUST ALONE
Do not try to do some internal service or adjustment unless another person capable of rendering first aid resuscitation is present.

ManualsPlus.com

Safety Symbols

⎓	Direct current
∼	Alternating current
≂	Both direct and alternating current
⏚	Protective earth (ground) terminal
⚠	Attention (refer to accompanying documents)

WARNING
The WARNING sign denotes a hazard. It calls attention to a procedure, practice, or the like, which, if not correctly performed or adhered to, could result in personal injury. Do not proceed beyond a WARNING sign until the indicated conditions are fully understood and met.

CAUTION
The CAUTION sign denotes a hazard. It calls attention to an operating procedure, or the like, which, if not correctly performed or adhered to, could result in damage to or destruction of part or all of the product. Do not proceed beyond a CAUTION sign until the indicated conditions are fully understood and met.

ManualsPlus.com

Compliance Statements

Disposal of Old Electrical & Electronic Equipment (Applicable in the European Union and other European countries with separate collection systems)

This product is subject to Directive 2002/96/EC of the European Parliament and the Council of the European Union on waste electrical and electronic equipment (WEEE), and in jurisdictions adopting that Directive, is marked as being put on the market after August 13, 2005, and should not be disposed of as unsorted municipal waste. Please utilize your local WEEE collection facilities in the disposition of this product and otherwise observe all applicable requirements.

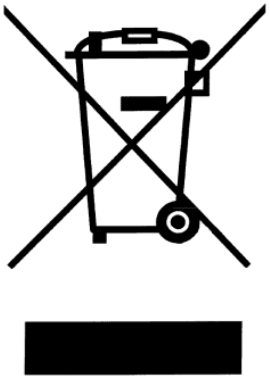

CE Declaration of Conformity

The DC electronic load meets the requirements of Low Voltage Directive 73/23/EEC and Electromagnetic Compatibility Directive 89/336/EEC amended by 93/68/EEC.

Low Voltage Directive

- EN61010-1: 2001

EMC Directive

- EN50081-1
- EN50082-1

ManualsPlus.com

Table of Contents

Safety Summary **2**
Compliance Statements **4**
Chapter 1 Introduction to Programming **6**
1.1 GPIB Capabilities of the Electronic Load 6
1.2 RS-232 Capabilities of the Electronic Load 7
1.3 USB-TMC Capabilities of the Electronic Load 9
1.4 Programming the Status Registers 10
1.5 Trigger Model (GPIB operation) 17
Chapter 2 Introduction to SCPI **19**
2.1 Types of SCPI Commands 19
2.2 Types of SCPI Messages 22
2.3 SCPI Data Formats 24
2.4 SCPI Command Completion 26
Chapter 3 SCPI Commands **28**
3.1 Language Dictionary 28
3.2 Common Commands 29
3.3 Subsystem Commands 36
Channel Commands 37
Trigger Commands 38
System Commands 42
Trace Commands 48
Source Commands 52
List Commands 73
Measurement Commands 76
Calibration Commands 81
3.4 SCPI Command Tree 85
Chapter 4 Programming Examples **96**
4.1 Introduction 96
4.2 Programming the Input 96
4.3 Programming Lists 100
Chapter 5 Error Messages **101**

ManualsPlus.com

Chapter 1

Introduction to Programming

This guide contains programming information for the B&K Precision MDL Series DC Electronic Load. Models in this series include the MDL001, MDL002, MDL200, MDL252, MDL305, MDL400, MDL505, and MDL600. Unless otherwise noted, this document will refer to all of these instruments as "electronic load".

1.1 GPIB Capabilities of the Electronic Load

All electronic load functions except for setting the communication parameters are programmable over the GPIB. The IEEE 488.2 capabilities of the electronic load are described in the table below.

GPIB Capabilities	Response	Interface Function
Talker/Listener	All electronic load functions except for setting the communication parameters are programmable over the GPIB. The electronic load can send and receive messages over the GPIB. Status information is sent using a serial poll.	AH1, SH1, T6, L4
Service Request	The electronic load sets the SRQ line true if there is an enabled service request condition.	SR1
Remote/Local	In local mode, the electronic load is controlled from the front panel but will also execute commands sent over the GPIB. The electronic load powers up in local mode and remains in local mode until it receives a command over the GPIB. Once the electronic load is in remote mode, the front panel REM annunciator turns on, all front panel keys (except Shift + Local) are disabled, and the display is in normal metering mode. Pressing Shift + Local on the front panel returns the electronic load to local mode. This can be disabled using local lockout so that only the controller or the power switch can return the electronic load to local mode.	RL1
Device Trigger	The electronic load will respond to the device trigger function.	DT1
Group Execute Trigger	The electronic load will respond to the group execute trigger function.	GET

ManualsPlus.com

Device Clear	The electronic load responds to the Device Clear **(DCL)** and Selected Device Clear **(SDC)** interface commands. They cause the electronic load to clear any activity that would prevent it from receiving and executing a new command (including ***WAI** and ***OPC?**). **DCL** and **SDC** do not change any programmed settings.	DCL,SDC

GPIB Address

The electronic load operates from a GPIB address that is set from the front panel. To set the GPIB address, press Shift + ⑦ (System menu) on the front panel and enter the address using the Entry keys. The address can be set from 0 to 30. The GPIB address is stored in non-volatile memory.

1.2 RS-232 Capabilities of the Electronic Load

Use a cable with two serial interfaces (DB9) to connect the electronic load and PC. It can be activated by selecting <RS-232> in <Communication> of the System menu (Shift + ⑦ on the front panel). NOTE: There are two serial interfaces on the rear panel of the MDL001: the left 9-pin COM interface is the RS-232 communication interface and the right 9-pin COM serial port connection is not for use. All SCPI commands are available through RS-232 programming. The EIA RS-232 standard defines the interconnections between data terminal equipment (DTE) and data communications equipment (DCE). The electronic load is designed to be a DTE and can be connected to another DTE such as a PC COM port through a null modem cable.

NOTE: The RS-232 settings in your program must match the settings specified in the front panel System menu. Press Shift + ⑦ on the front panel to enter the System menu if you need to change the settings. You can break data transmissions by sending a ^C or ^X character string to the electronic load. This clears any pending operation and discards any pending output.

RS-232 Data Format

The RS-232 data is a 10-bit word with one start bit and one stop bit.

Parity=None	Start Bit	8 Data Bits	Stop Bit

The number of start and stop bits are not programmable. However, the following parameters are selectable in the System menu using the front panel Shift + ⑦ key.

ManualsPlus.com

Baud Rate

The System menu (Shift + ⑦) lets you select one of the following baud rates, which are stored in non-volatile memory: 4800, 9600, 19200, 38400, 57600, or 115200.

Parity

None - eight data bits without parity
Even - seven data bits with even parity
Odd - seven data bits with odd parity

RS-232 Flow Control

The RS-232 interface supports the following flow control options. For each case, the electronic load will send a maximum of five characters after hold-off is asserted by the controller. The electronic load is capable of receiving as many as fifteen additional characters after it asserts hold-off.

- The electronic load asserts its Request to Send (RTS) line to signal hold-off when its input buffer is almost full, and it interprets its Clear to Send (CTS) line as a hold-off signal from the controller.
- When the input queue of the electronic load becomes more than ¾ full, the instrument issues an X-OFF command. The control program should respond to this and stop sending characters until the electronic load issues the X-ON, which it will do once its input buffer has dropped below half-full. The electronic load recognizes X_ON and X_OFF sent from the controller. An X-OFF will cause the electronic load to stop outputting characters until it sees an X-ON.
- NONE: There is no flow control.

Flow control options are stored in non-volatile memory.

RS-232 Connections

The RS-232 serial port can be connected to the serial port of a controller (i.e., personal computer) using a null modem RS-232 cable terminated with DB-9 connectors. Figure 1 shows the pinout for the connector.

If your computer uses a DB-25 connector for the RS-232 interface, you will need a cable or adapter with a DB-25 connector on one end and a DB-9 connector on the other. It must be a straight-through (not null modem) cable.

Figure 1 - RS-232 Connector Pinout

ManualsPlus.com

Pin	Signal	Description
1	NC	No Connection
2	TXD	Transmit Data
3	RXD	Receive Data
4	NC	No Connection
5	GND	Ground
6	NC	No Connection
7	CTS	Clear to Send
8	RTS	Ready to Send
9	NC	No Connection

RS-232 Troubleshooting

If you are having trouble communicating over the RS-232 interface, check the following:

- The computer and the electronic load must be configured for the same baud rate, parity, number of data bits, and flow control options. Note that the electronic load is configured for 1 start bit and 1 stop bit (these values are fixed).
- The correct interface cables or adapters must be used, as described under the RS-232 connector. Note that even if the cable has the proper connectors for your system, the internal wiring may be incorrect.
- The interface cable must be connected to the correct serial port on your computer (COM1, COM2, etc.) and the correct 9-pin serial port on the mainframe.

1.3 USB-TMC Capabilities of the Electronic Load

All electronic load functions are programmable over the USB.

The USB488 interface capabilities of the electronic load are described below:

- The interface is IEEE 488.2 standard USB488 interface.
- The interface accepts REN_CONTROL, GO_TO_LOCAL, and LOCAL_LOCKOUT requests.
- The interface accepts MsgID = TRIGGER USBTMC command message and forwards TRIGGER requests to the function layer.

The USB488 device capabilities of the electronic load are described below:

- The device understands all mandatory SCPI commands.
- The device is SR1 capable.
- The device is RL1 capable.
- The device is DT1 capable.

ManualsPlus.com

1.4 Programming the Status Registers

You can use status register programming to determine the operating condition of the electronic load at any time. For example, you may program the electronic load to generate an interrupt (assert SRQ) when an event such as a current protection occurs. When the interrupt occurs, your program can then act on the event in the appropriate fashion.

The following table defines the status bits. Figure shows the status register structure of the electronic load. The Standard Event, Status Byte, and Service Request Enable registers and the Output Queue perform standard GPIB functions as defined in the *IEEE 488.2 Standard Digital Interface for Programmable Instrumentation.* The Operation Status and Questionable Status registers implement functions that are specific to the electronic load.

Bit Configurations of Status Registers

Operation Status Group		
Bit	**Signal**	**Meaning**
0	**CAL**	*Calibrating.* The electronic load is computing new calibration constants.
5	**TRG**	*Waiting.* The electronic load is waiting for a trigger.
Channel Status Group		
Bit	**Signal**	**Meaning**
0	**VF**	*Voltage Fault.* Either an overvoltage or a reverse voltage has occurred. This bit reflects the active state of the FLT pin on the back of the unit. The bit remains set until the condition is removed and INP:PROT:CLE is programmed.
1	**OC**	*Overcurrent.* An overcurrent condition has occurred. This occurs if the current exceeds 102% of the rated current or if it exceeds the user-programmed current protection level. Removing the overcurrent condition clears the bit. If the condition persists beyond the user programmable delay time, PS bit is also set and the input is turned off. Both bits remain set until the condition is removed and INP:PROT:CLE is programmed.
2	**RS**	*Remote Sense.* When the remote sense is connected, this bit is set.

ManualsPlus.com

3	**OP**	*Overpower.* An overpower condition has occurred. This occurs if the unit exceeds the max power or it exceeds the user-programmed power protection level. Removing the overpower condition clears the bit. If the condition persists beyond the user programmable delay time, PS bit is also set and the input is turned off. Both bits remain set until the condition is removed and INP:PROT:CLE is programmed.
4	**OT**	*Overtemperature.* An overtemperature condition has occurred. Both this bit and PS bit are set and the input is turned off. Both bits remain set until the unit is cooled down and INP:PROT:CLE is programmed.
7	**RUN**	*List run or stop status.* When list is running, this bit is set.
8	**EPU**	*Extended Power Unavailable.* This bit is not used.
9	**RRV**	*Remote Reverse Voltage.* A reverse voltage condition has occurred on the sense terminals. Both this bit and VF bit are set. Removing the reverse voltage clears this bit but does not clear VF bit. VF bit remains set until INP:PROT:CLE is programmed.
10	**UNR**	*Unregulated.* The input is unregulated. When the input is regulated this bit is cleared.
11	**LRV**	*Local Reverse Voltage.* A reverse voltage condition has occurred on the input terminals. Both this bit and VF bit are set. Removing the reverse voltage clears this bit but does not clear PS bit. PS bit remains set until INP:PROT:CLE is programmed.
12	**OV**	*Overvoltage.* An overvoltage condition has occurred. Both this bit and VF bit 0 are set and the electronic loads are turned off. Both bits remain set until the condition is removed and INP:PROT:CLE is programmed.
13	**PS**	*Protection Shutdown.* The protection shutdown circuit has tripped because of an overcurrent, overpower, or overtemperature condition. The bit remains set until INP:PROT:CLE is programmed.
14	**VON**	*Voltage of sink current on.* When the voltage of input exceeds the user-programmed Von level, this bit is set.
15	**TBF**	*Trace Buffer Full.*

ManualsPlus.com

Questionable Status Group Same as Channel Status Group		
Standard Event Status Group		
Bit	**Signal**	**Meaning**
0	**OPC**	*Operation Complete.* The load has completed all pending operations. *OPC must be programmed for this bit to be set when pending operations are complete.
2	**QYE**	*Query Error.* The output queue was read with no data present or the data was lost. Errors in the range of 499 through 400 can set this bit.
3	**DDE**	*Device-Dependent Error.* Memory was lost or self-test failed. Errors in the range of 399 through 300 can set this bit.
4	**EXE**	*Execution Error.* A command parameter was outside its legal range, inconsistent with the load's operation, or prevented from executing because of an operating condition. Errors in the range of 299 through 200 can set this bit.
5	**CME**	*Command Error.* A syntax or semantic error has occurred or the load received a <get> within a program message. Errors in the range of 199 through 100 can set this bit.
7	**PON**	*Power-On.* The unit has been turned off and then on since this bit was last read.
Status Byte and Service Request Enable Registers		
Bit	**Signal**	**Meaning**
0	**CSUM**	*Channel Summary.* Indicates if an enabled channel event has occurred.
2	**EAV**	*Error Available Summary.* Indicates if the Error Queue contains data.
3	**QUES**	*Questionable Status Summary.* Indicates if an enabled questionable event has occurred.
4	**MAV**	*Message Available Summary.* Indicates if the Output Queue contains data.
5	**ESB**	*Event Status Summary.* Indicates if an enabled standard event has occurred.
6	**RQS/MSS**	*Request Service.* During a serial poll, RQS is returned and cleared. *Master Status Summary.* For an *STB? query, MSS is returned without being cleared.
7	**OPER**	*Operation Status Summary.* Indicates if an operation event has occurred.

ManualsPlus.com

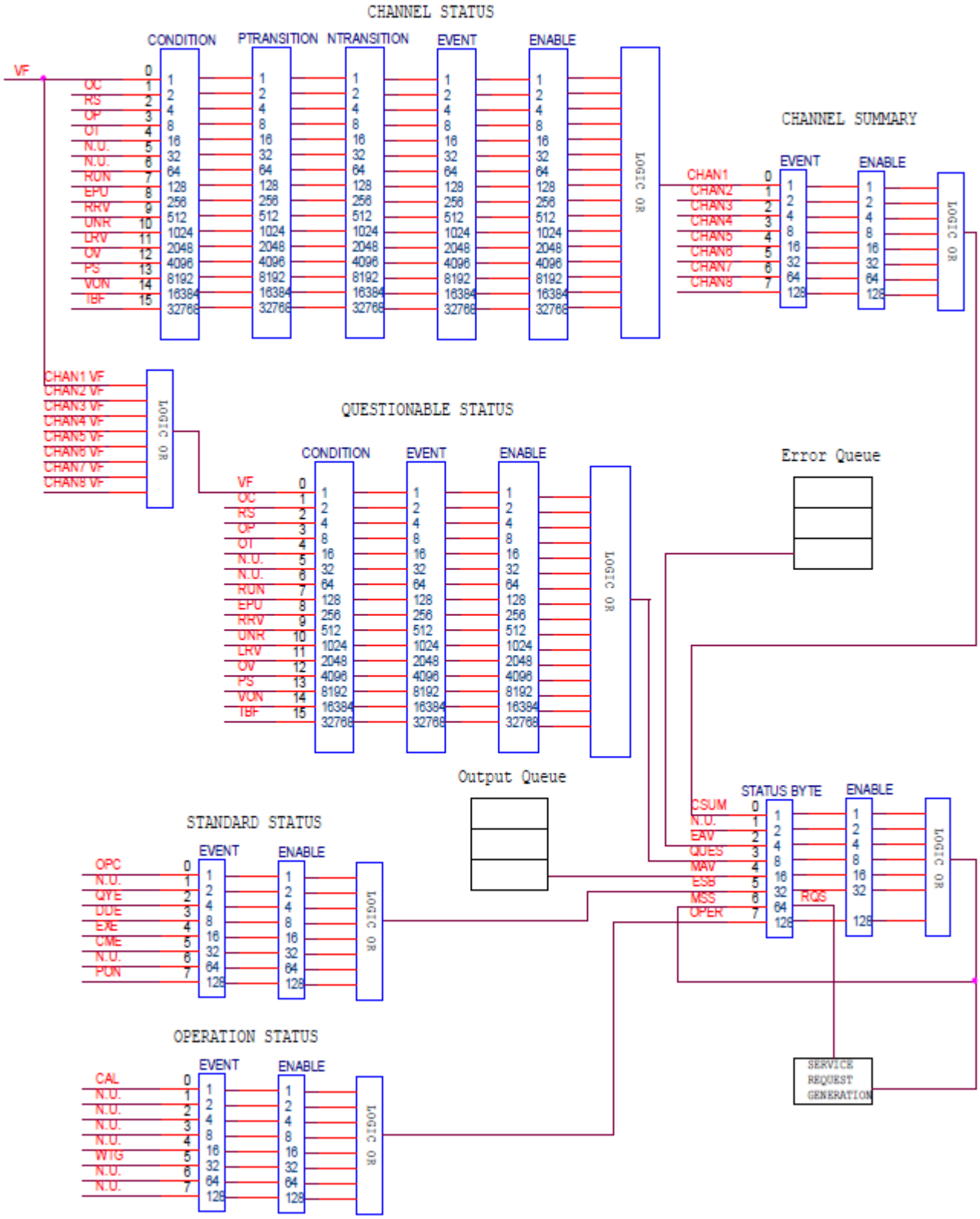

Figure 2 - Load Status Register Structure

ManualsPlus.com

Condition registers
All status register sets have a condition register. A condition register is a real-time, read-only register that constantly updates to reflect the current operating conditions of the instrument.

Use the :CONDition? query commands in the STATus Subsystem to read the condition registers. See **Chapter 3** for more information.

Event registers
Each status register set has an event register. An event register is a latched, read-only register whose bits are set by the corresponding condition register. Once a bit in an event register is set, it remains set (latched) until the register is cleared by a specific clearing operation. The bits of an event register are logically ANDed with the bits of the corresponding enable register and applied to an OR gate. The output of the OR gate is applied to the Status Byte Register.

Use the *ESR? Common Command to read the Standard Event Register. All other event registers are read using the :EVENt? query commands in the STATus Subsystem. See **Chapter 3** for more information.

An event register is cleared when it is read. The following operations clear all event registers:

- Cycling power
- Sending *CLS

Enable registers
Each status register set has an enable register. An enable register is programmed by you and serves as a mask for the corresponding event register. An event bit is masked when the corresponding bit in the enable register is cleared (0). When masked, a set bit in an event register cannot set a bit in the Status Byte Register (1 AND 0 = 0). To use the Status Byte Register to detect events (i.e., serial poll), you must unmask the events by setting (1) the appropriate bits of the enable registers. To program and query the Standard Event Status Register, use the *ESE and *ESE? Common Commands respectively. All other enable registers are programmed and queried using the :ENABle and :ENABLe? commands in the STATus Subsystem. See **Chapter 3** for more information.

An enable register is not cleared when it is read. The following operations affect the enable registers:

- Cycling power clears all enable registers
- :STATus:PREset clears the following enable registers:
  - Operation Event Enable Register
  - Questionable Event Enable Register
  - Channel Summary Event Enable Register
- *ESE 0 clears the Standard Event Status Enable Register.

Output queue
The output queue holds data that pertains to the normal operation of the instrument. For example, when a query command is sent, the response message is placed on the output queue.

ManualsPlus.com

When data is placed in the output queue, the Message Available (MAV) bit in the Status Byte Register gets set. A data message is cleared from the output queue when it is read. The output queue is considered cleared when it is empty. An empty output queue clears the MAV bit in the Status Byte Register.

Error queue

The error queue holds error and status messages. When an error or status event occurs, a message that defines the error/status is placed in the error queue. This queue will hold up to 10 messages. When a message is placed in the error queue, the Error Available (EAV) bit in the Status Byte Register is set. An error message is cleared from the Error/Status queue when it is read. The error queue is considered cleared when it is empty. An empty error queue clears the EAV bit in the Status Byte Register. Read an error message from the error queue by sending the following SCPI query command:

:SYSTem:ERRor?

Status Byte and Service Request (SRQ)

Service request is controlled by two 8-bit registers: the Status Byte Register and the Service Request Enable Register.

Status Byte Register

The summary messages from the status registers and queues are used to set or clear the appropriate bits (B0, B2, B3, B4, B5, and B7) of the Status Byte Register. These bits do not latch, and their states (0 or 1) are solely dependent on the summary messages (0 or 1). For example, if the Standard Event Status Register is read, its register will clear. As a result, its summary message will reset to 0, which in turn will clear the ESB bit in the Status Byte Register.

Bit B6 in the Status Byte Register is either:

- The Master Summary Status (MSS) bit, sent in response to the *STB? Command, indicates the status of any set bits with corresponding enable bits set.
- The Request for Service (RQS) bit, sent in response to a serial poll, indicates which device was requesting service by pulling on the SRQ line.

For a description of the other bits in the Status Byte Register, see “Common commands, *STB?” The IEEE-488.2 standard uses the following common query command to read the Status Byte Register:

*STB?

When reading the Status Byte Register using the *STB? command, bit B6 is called the MSS bit. None of the bits in the Status Byte Register are cleared when using the *STB? command to read it.

The IEEE-488.1 standard has a serial poll sequence that also reads the Status Byte Register and is better suited to detect a service request (SRQ). When using the serial poll, bit B6 is called the RQS bit. Serial

ManualsPlus.com

polling causes bit B6 (RQS) to reset. Serial polling is discussed in more detail later in this section entitled “Serial Poll and SRQ.” Any of the following operations clear all bits of the Status Byte Register:

- Cycling power
- Sending the *CLS common command

Note: The MAV bit may or may not be cleared.

Service request enable register
This register is programmed by you and serves as a mask for the Status Summary Message bits (B0, B2, B3, B4, B5, and B7) of the Status Byte Register. When masked, a set summary bit in the Status Byte Register cannot set bit B6 (MSS/RQS) of the Status Byte Register. Conversely, when unmasked, a set summary bit in the Status Byte Register sets bit B6.

A Status Summary Message bit in the Status Byte Register is masked when the corresponding bit in the Service Request Enable Register is cleared (0). When the masked summary bit in the Status Byte Register sets, it is ANDed with the corresponding cleared bit in the Service Request Enable Register. The logic “1” output of the AND gate is applied to the input of the OR gate and, thus, sets the MSS/RQS bit in the Status Byte Register. The individual bits of the Service Request Enable Register can be set or cleared by using the following common command:

*SRE <NRf>

To read the Service Request Enable Register, use the *SRE? query command. The Service Request Enable Register clears when power is cycled or a parameter (n) value of zero is sent with the *SRE command (*SRE 0).

Serial poll and SRQ
Any enabled event summary bit that goes from 0 to 1 will set RQS and generate a service request (SRQ). In your test program, you can periodically read the Status Byte Register to check if a service request (SRQ) has occurred and what caused it. If an SRQ occurs, the program can, for example, branch to an appropriate subroutine that will service the request. Typically, service requests (SRQs) are managed by the serial poll sequence of the electronic load. If an SRQ does not occur, bit B6 (RQS) of the Status Byte Register will remain cleared and the program will simply proceed normally after the serial poll is performed. If an SRQ does occur, bit B6 of the Status Byte Register will set and the program can branch to a service subroutine when the SRQ is detected by the serial poll. The serial poll automatically resets RQS of the Status Byte Register. This allows subsequent serial polls to monitor bit B6 for an SRQ occurrence generated by other event types. After a serial poll, the same event can cause another SRQ, even if the event register that caused the first SRQ has not been cleared.

A serial poll clears RQS but does not clear MSS. The MSS bit stays set until all Status Byte event summary bits are cleared.

ManualsPlus.com

1.5 Trigger Model (GPIB operation)

This section describes how the electronic load operates over the GPIB bus. The flowchart in Figure 3 summarizes operation over the bus and is called the trigger model. It is called the trigger model because operation is controlled by SCPI commands from the Trigger subsystem (see **Chapter 3** for more information). Key SCPI commands are included in the trigger model.

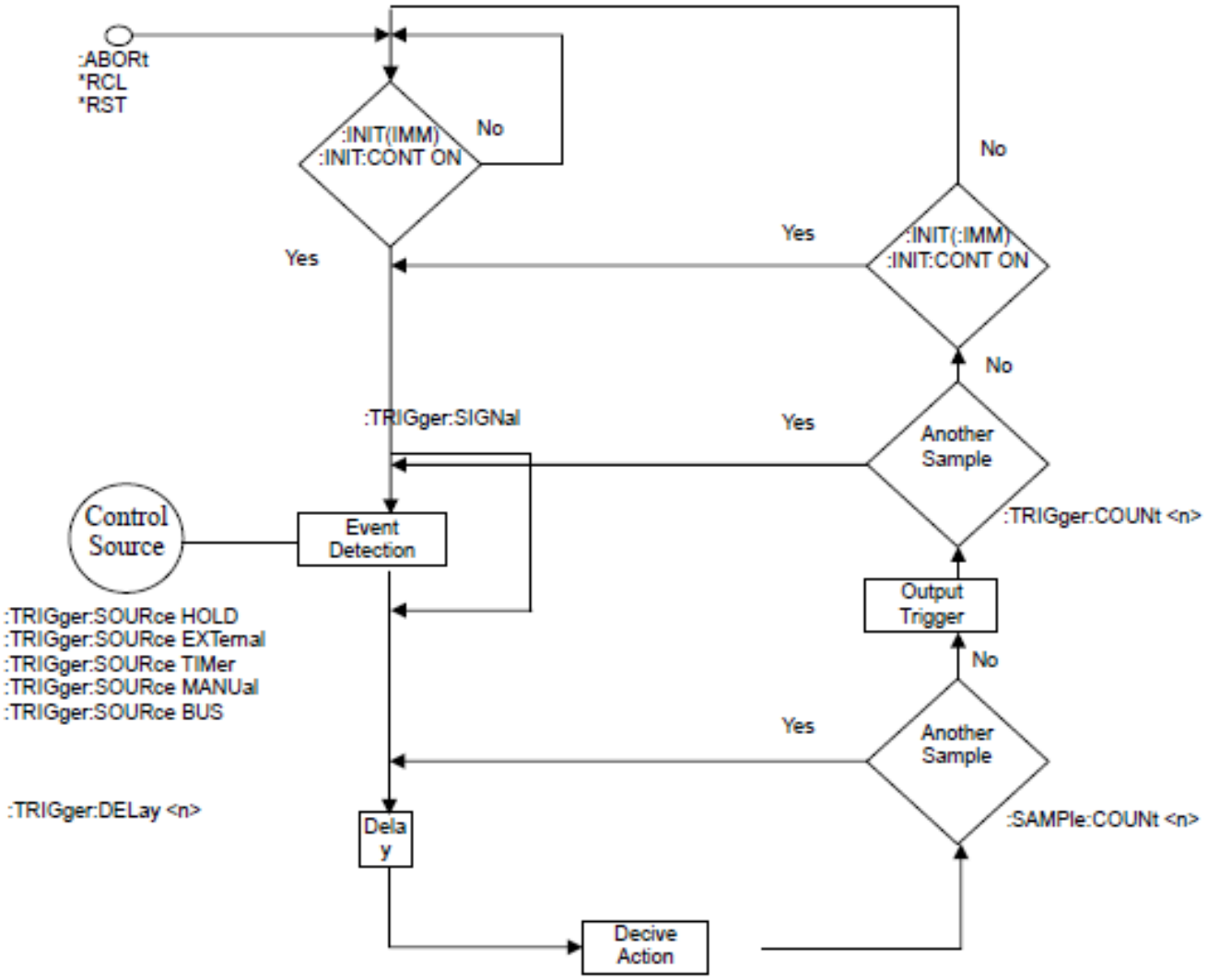

Figure 3 – Trigger Model

ManualsPlus.com

Idle and initiate

The instrument is considered to be in the idle state whenever it is not operating. While in the idle state, the instrument cannot perform any measure or scan functions. You can send two commands over the bus to remove the instrument from the idle state:

- :INITiate
- :INITiate:CONTinuous ON

With continuous initiation enabled (:INITiate:CONTinuous ON), the instrument will not remain in the idle state after all programmed operations are completed. However, you can return the instrument to the idle state at any time by sending any of these commands:

- *RST
- ABORt
- *RCL

Trigger model operation

Once the instrument is taken out of idle, operation proceeds through the trigger model down to the device action.

Control Source — As shown in Figure 3, a control source is used to hold up operation until the programmed event occurs. The control source options are explained as follows:

- HOLD — Only the TRIG:IMM command will generate a trigger in HOLD mode. All other trigger commands are ignored.
- MANual — Event detection is satisfied by pressing the TRIG key.
- TIMer — This generates triggers that are in synchronization with the electronic load's internal oscillator as the trigger source. The internal oscillator begins running as soon as this command is executed. Use TRIG:TIM to program the oscillator period.
- EXTernal — Event detection is satisfied when an input trigger via the TRIGGER LINK connector is received by the electronic load.
- BUS — Event detection is satisfied when a bus trigger (GET or *TRG) is received by the electronic load.

Delay — A programmable delay is available after the event detection. The delay can be manually set from 0 to 999999.999 seconds.

ManualsPlus.com

Chapter 2

Introduction to SCPI

SCPI (Standard Commands for Programmable Instruments) is a programming language for controlling instrument functions over GPIB, RS-232, USB, and Ethernet interface. SCPI is layered on top of the hardware portion of IEEE 488.2. The same SCPI commands and parameters control the same functions in different classes of instruments.

Conventions Used in This Guide

Angle brackets	< >	Items within angle brackets are parameter abbreviations. For example, <NR1> indicates a specific form of numerical data.
Vertical bar	|	Vertical bars separate alternative parameters. For example, NORM | TEXT indicates that either "NORM" or "TEXT" can be used as a parameter.
Square Brackets	[ ]	Items within square brackets are optional. The representation [SOURce:] VOLTage means that SOURce: may be omitted.
Braces	{ }	Braces indicate parameters that may be repeated zero or more times. It is used especially for showing arrays. The notation <A>{<,B>} shows that parameter "A" must be entered, while parameter "B" may be omitted or may be entered one or more times.

2.1 Types of SCPI Commands

SCPI has two types of commands, common and subsystem.

Common:

Common commands generally are not related to specific operation but to controlling overall electronic load functions, such as reset, status, and synchronization. All common commands consist of a three-letter mnemonic preceded by an asterisk (ex:*RST, *IDN?, *SRE 8).

Subsystem:

Subsystem commands perform specific electronic load functions. They are organized into an inverted tree structure with the "root" at the top. The following figure shows a portion of a subsystem command tree, from which you access the commands located along the various paths.

ManualsPlus.com

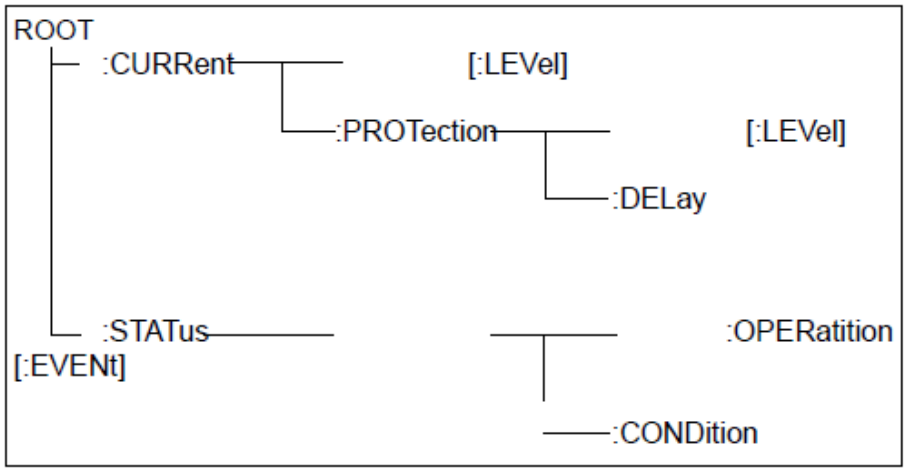

Figure 4 - Partial Command Tree

Multiple Commands in a Message

Multiple SCPI commands can be combined and sent as a single message with one message terminator. There are two important considerations when sending several commands within a single message:

- Use a semicolon to separate commands within a message.
- There is an implied header path that affects how commands are interpreted by the electronic load.

The header path can be thought of as a string that gets inserted **before** each command within a message. For the first command in a message, the header path is a null string. For each subsequent command the header path is defined as the characters that make up the headers of the previous command in the message up to and including the last colon separator. An example of a message with two commands is:

CURR:LEV 3;PROT:STAT OFF

which shows the use of the semicolon separating the two commands, and also illustrates the header path concept. Note that with the second command, the leading header "CURR" was omitted because after the "CURR:LEV 3" command, the header path became defined as "CURR" and thus the instrument interpreted the second command as:

CURR:PROT:STAT OFF

In fact, it would have been syntactically incorrect to include the "CURR" explicitly in the second command, since the result after combining it with the header path would be:

CURR:CURR:PROT:STAT OFF

which is incorrect.

ManualsPlus.com

Moving Among Subsystems

In order to combine commands from different subsystems, you need to be able to reset the header path to a null string within a message. You do this by beginning the command with a colon (:), which discards any previous header path. For example, you could clear the output protection and check the status of the Operation Condition register in one message by using a root specifier as follows:

PROTection:CLEAr; :STATus:OPERation:CONDition?

The following message shows how to combine commands from different subsystems as well as within the same subsystem:

POWer:LEVel 200; PROTection 28; : CURRent: LEVel 3; PROTection:STATe ON

Observe the use of the optional header LEVel to maintain the correct path within the voltage and current subsystems, and the use of the root specifier to move between subsystems.

Including Common Commands

You can combine common commands with subsystem commands in the same message. Treat the common command as a message unit by separating it with a semicolon (the message unit separator). Common commands *do not affect the header path;* you may insert them anywhere in the message.

VOLTage 17.5;:INITiate;*TRG
OUTPut OFF;*RCL 2;OUTPut ON

Case Sensitivity

Common commands and SCPI commands are not case sensitive. You can use upper or lower case and any case combination.

Example:
*RST = *rst
:DATA? = :data?
:SYSTem:PRESet = :system:preset

Long-form and Short-form Versions

A SCPI command word can be sent in its long-form or short-form version. The command subsystem tables in Chapter 3 provide the long-form version. However, the short-form version is indicated by upper case characters.

Example:
:SYSTem:PRESet (long-form)
:SYST:PRES (short form)
:SYSTem:PRES (long-form and short-form combination)

ManualsPlus.com

Note: Each command word must be in long-form or short-form, and not something in between. For example, :SYSTe:PRESe is illegal and will generate an error. The command will not be executed.

Using Queries

Observe the following precautions with queries:

- Set up the proper number of variables for the returned data. For example, if you are reading back a measurement array, you must dimension the array according to the number of measurements that you have placed in the measurement buffer.
- Read back all the results of a query before sending another command to the electronic load. Otherwise a *Query Interrupted* error will occur and the unreturned data will be lost.

2.2 Types of SCPI Messages

There are two types of SCPI messages, program and response.

1) A *program message* consists of one or more properly formatted SCPI commands sent from the controller to the electronic load. The message, which may be sent at any time, requests the electronic load to perform some action.
2) A *response message* consists of data in a specific SCPI format sent from the electronic load to the controller. The electronic load sends the message only when commanded by a program message called a "query."

The following figure illustrates SCPI message structure:

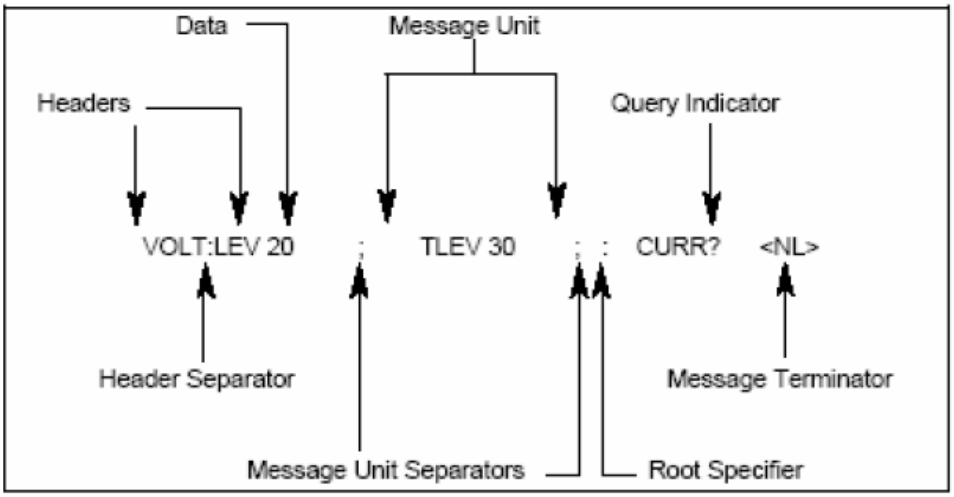

Figure 5 - SCPI Message Structure

ManualsPlus.com

Message Unit
The simplest SCPI command is a single message unit consisting of a command header (or keyword) followed by a message terminator. The message unit may include a parameter after the header. The parameter can be numeric or a string.

ABORt<NL>
VOLTage 20<NL>

Headers
Headers, also referred to as keywords, are instructions recognized by the electronic load. Headers may be either in the long-form or the short-form. In the long-form, the header is completely spelled out, such as VOLTAGE, STATUS, and DELAY. In the short form, the header has only the first three or four letters, such as VOLT, STAT, and DEL.

Query Indicator
Following a header with a question mark turns it into a query.

VOLTage?, VOLTage:PROTection?

If a query contains a parameter, place the query indicator at the end of the last header.

VOLTage:PROTection? MAX

Message Unit Separator
When two or more message units are combined into a compound message, separate the units with a semicolon.

STATus:OPERation?;QUEStionable?

Root Specifier
When it precedes the first header of a message unit, the colon becomes the root specifier. It tells the command parser that this is the root or the top node of the command tree.

Message Terminator
A terminator informs SCPI that it has reached the end of a message. Three permitted message terminators are:

1. Newline (<NL>), which is ASCII decimal 10 or hex 0A.
2. End or identify (<END>).
3. Both of the above (<NL><END>).

In the examples of this guide, there is an assumed message terminator at the end of each message.

ManualsPlus.com

Command Execution Rules

- Commands execute in the order that they are presented in the program message.
- An invalid command generates an error and is not executed.
- Valid commands that precede an invalid command in a multiple command program message are executed.
- Valid commands that follow an invalid command in a multiple command program message are ignored.

2.3 SCPI Data Formats

All data programmed to or returned from the electronic load is ASCII. The data may be numerical or a character string.

Numerical Data Formats

Symbol	Data Form
	Talking Formats
<NR1>	Digits with an implied decimal point assumed at the right of the least-significant digit. Example: 273
<NR2>	Digits with an explicit decimal point. Example: .0273
<NR3>	Digits with an explicit decimal point and an exponent. Example: 2.73E+2
	Listening Formats
<NRf>	Extended format that includes <NR1>, <NR2> and <NR3>. Example: 273 273. 2.73E2
<NRf+>	Expanded decimal format that includes <NRf> and MIN MAX DEF. Example: 273 273. 2.73E2 MAX. MIN and MAX are the minimum and maximum limit values that are implicit in the range specification for the parameter. DEF is the default values for the parameter.
<Bool>	Boolean Data. Example: 0 | 1 or ON | OFF

ManualsPlus.com

Suffixes and Multipliers

Class	Suffix	Unit	Unit with Multiplier
Amplitude	V	volt	MV (millivolt)
Current	A	amps	MA (milliamp)
Power	W	watt	MW (milliwatt)
Resistance	OHM	ohm	MOHM (megohm)
	R	ohm	MR(megohm)
Slew Rate	A/uS	amps/microsecond	
Time	S	second	MS (millisecond)
Common Multipliers			
	1E3	K	kilo
	1E-3	M	milli
	1E-6	U	micro

Response Data Types

Character strings returned by query statements may take either of the following forms, depending on the length of the returned string:

<CRD> Character Response Data. Permits the return of character strings.

<AARD> Arbitrary ASCII Response Data. Permits the return of undelimited 7-bit ASCII. This data type has an implied message terminator.

<SRD> String Response Data. Returns string parameters enclosed in double quotes.

Response Messages

A response message is the message sent by the instrument to the computer in response to a query command program message.

Sending a Response Message

After sending a query command, the response message is placed in the Output Queue. When the electronic load is then addressed to talk, the response message is sent from the Output Queue to the computer.

Multiple Response Messages

If you send more than one query command in the same program message (see the paragraph entitled, “Multiple Command Messages”), the multiple response messages for all the queries is sent to the computer when the electronic load is addressed to talk. The responses are sent in the order that the query commands were sent and are separated by semicolons (;). Items within the same query are separated by commas (,). The following example shows the response message for a program message

ManualsPlus.com

that contains four single item query commands:

0; 1; 1; 0

Response Message Terminator (RMT)
Each response is terminated with an LF (line feed) and EOI (end or identify). The following example shows how a multiple response message is terminated:

0; 1; 1; 0; <RMT>

Message Exchange Protocol
Two rules summarize the message exchange protocol:

Rule 1. You must always tell the electronic load what to send to the computer.
The following two steps must always be performed to send information from the computer to the instrument:
1) Send the appropriate query command(s) in a program message.
2) Address the electronic load to talk.

Rule 2. The complete response message must be received by the computer before another program message can be sent to the electronic load.

2.4 SCPI Command Completion

SCPI commands sent to the electronic load are processed either sequentially or in parallel. Sequential commands finish execution before a subsequent command begins. Parallel commands allow other commands to begin executing while the parallel command is still executing. Commands that affect trigger actions are among the parallel commands.

The *WAI, *OPC, and *OPC? common commands provide different ways of indicating when all transmitted commands, including any parallel ones, have completed their operations. The syntax and parameters for these commands are described in Chapter 4. Some practical considerations for using these commands are as follows:

*WAI This prevents the electronic load from processing subsequent commands until all pending operations are completed.

*OPC? This places a 1 in the Output Queue when all pending operations have completed. Since it requires your program to read the returned value before executing the next program statement, *OPC? can be used to cause the controller to wait for commands to complete before proceeding with its program.

ManualsPlus.com

*OPC This sets the OPC status bit when all pending operations have completed. Since your program can read this status bit on an interrupt basis, *OPC allows subsequent commands to be executed.

NOTE: The trigger system must be in the Idle state in order for the status OPC bit to be true. Therefore, as far as triggers are concerned, OPC is false whenever the trigger system is in the Initiated state.

Using Device Clear

You can send a device clear at any time to abort a SCPI command that may be hanging up the GPIB interface. The status registers, error queue, and all configuration states are left unchanged when a device clear message is received. Device clear performs the following actions:

- The input and output buffers of the electronic load are cleared.
- The electronic load is prepared to accept a new command string.

The following statement shows how to send a device clear over the GPIB interface using *GW BASIC:*

CLEAR 705 *IEEE-488 Device Clear*

The following statement shows how to send a device clear over the GPIB interface using the GPIB command library for *C* or *QuickBASIC:*

IOCLEAR (705)

ManualsPlus.com

Chapter 3

SCPI Commands

This chapter explains in detail the SCPI commands used by the electronic load. The electronic load conforms to SCPI Version 1995.0.

3.1 Language Dictionary

This section describes the syntax and parameters for all the IEEE 488.2 SCPI subsystem and common commands used by the electronic loads. Since the SCPI syntax remains the same for all programming languages, the examples given for each command are generic.

Syntax Forms	Syntax definitions use the long form, but only short form headers (or "keywords") appear in the examples. Use the long form to help make your program self-documenting.
Parameters	Most commands require a parameter and all queries will return a parameter. The range for a parameter may vary according to the model of electronic load. Parameters for all models are listed in the Specifications table in the User's Guide.
Channel	If a command only applies to individual channels of a mainframe, the entry Channel Selectable will appear in the command description.
Related Commands	Where appropriate, related commands or queries are included. These are listed because they are either directly related by function, or because reading about them will clarify or enhance your understanding of the original command or query.
Order of Presentation	The dictionary is organized as follows: • Subsystem commands, arranged by subsystem • IEEE 488.2 common commands

Common Commands

Common commands begin with an * and consist of three letters (command) or three letters and a ? (query). They are defined by the IEEE 488.2 standard to perform common interface functions. Common commands and queries are categorized under System, Status, or Trigger functions and are listed at the end of this chapter.

ManualsPlus.com

Subsystem Commands

Subsystem commands are specific to functions. They can be a single command or a group of commands. The groups are comprised of commands that extend one or more levels below the root.

The subsystem command groups are arranged according to function: Calibration, Channel, Input, List, Measurement, Port, Status, System, Transient, and Trigger. Commands under each function are grouped alphabetically under the subsystem. Commands followed by a question mark (?) take only the query form. When commands take both the command and query form, this is noted in the syntax descriptions.

3.2 Common Commands

Common commands begin with an * and consist of three letters (command) IEEE 488.2 standard to perform some common interface functions. The electronic loads respond to the required common commands that control status reporting, synchronization, and internal operations. The electronic loads also respond to optional common commands that control triggers, power-on conditions, and stored operating parameters.

Common commands and queries are listed alphabetically. If a command has a corresponding query that simply returns the data or status specified by the command, then both command and query are included under the explanation for the command. If a query does not have a corresponding command or is functionally different from the command, then the query is listed separately. The description for each common command or query specifies any status registers affected. Refer to **1.4 Programming the Status Registers**, which explains how to read specific register bits and use the information that they return.

Common Command Table

Mnemonic	Name	Description
*CLS	Clear status	Clears all event registers and Error Queue.
*ESE <NRf>	Event enable command	Program the Standard Event Enable Register.
*ESE?	Event enable query	Read the Standard Event Enable Register.
*ESR?	Event status query	Read the Standard Event Status Register and clear it.
*OPC	Operation complete command	Set the Operation Complete bit in the Standard Event Status Register after all pending commands have been executed.

ManualsPlus.com

Common Command Table (cont.)

Mnemonic	Name	Description
*OPC?	Operation complete query	Places an ASCII “1” into the output queue when all pending selected device operations have been completed.
*RCL <NRf>	Recall command	Returns the electronic load to the setup configuration stored in the specified memory location.
*RST	Reset command	Returns the electronic load to the *RST default conditions.
*SAV <NRf>	Save command	Saves the current setup to the specified memory location.
*SRE <NRf>	Service request enable command	Programs the Service Request Enable register.
*SRE?	Service request enable query	Reads the Service Request Enable register.
*STB?	Read status byte query	Read the Status Byte register
*TRG	Trigger command	Send a trigger to the electronic load.
*TST?	Self-test query	Wait until all previous commands are executed.
*WAI	Wait to continue command	Wait until all previous commands are executed.
*RDT?	Frame query	Return the type of electronic frame.
*IDN?	Identification query	Return the manufacturer, model number, serial number, and firmware revision levels of the unit.

*CLS — Clear Status

This command clears the bits of the following registers:

- Standard Event Status
- Operation Status Event
- Questionable Status Event
- Status Byte
- Error Queue

Command Syntax *CLS
Parameters None

ManualsPlus.com

*ESE <NRf> — Event Enable

This command programs the Standard Event Status Enable register bits. The programming determines which events of the Standard Event Status Event Register (see *ESR?) are allowed to set the ESB (Event Summary Bit) of the Status Byte register. A "1" in the bit position enables the corresponding event. All of the enabled events of the Standard Event Status Event register are logically ORed to cause the Event Summary Bit (ESB) of the Status Byte Register to be set. See **1.4 Programming the Status Registers** for descriptions of the Standard Event Status registers. The query reads the Standard Event Status Enable register.

Command Syntax	*ESE <NRf>
Parameters	0 to 255
Power-On Value	See *PSC
Example	*ESE 129
Query Syntax	*ESE?
Returned Parameters	<NR1>
Related Commands	*ESR? *PSC *STB?

*ESR?

This query reads the Standard Event Status register. Reading the register clears it. The bit configuration of this register is the same as the Standard Event Status Enable register (see *ESE). See **1.4 Programming the Status Registers** for a detailed explanation of this register.

Query Syntax	*ESR?
Parameters	None
Returned Parameters	<NR1> (register value)
Related Commands	*CLS *ESE *ESE? *OPC

*IDN?

This query requests the electronic load to identify itself. It returns the data in four fields separated by commas.

Query Syntax	*IDN?		
Parameters	None		
Returned Parameters	<AARD>	**Field**	**Information**
		B&K Precision	manufacturer
		xxxxxx	model number
		xxxxxxxxxxxxxxxxxx	serial number or 0
		x.xx	firmware revision

Example: BK PRECISION, MDL001, 600150010677510002, 1.43

ManualsPlus.com

*RDT?

This query requests the types of electronic load module. If channel does not exist, it returns 0. If channel exists, it returns the type.

Query Syntax	*RDT?
Parameters	None
Returned Parameters	<AARD>
Example	MDL200, 0, MDL305, 0, 0, 0, 0, 0

*OPC

This command causes the interface to set the OPC bit (bit 0) of the Standard Event Status register when the electronic load has completed all pending operations. (See *ESE command for the bit configuration of the Standard Event Status registers.) Pending operations are complete when:

- All commands sent before *OPC have been executed. This includes overlapped commands. Most commands are sequential and are completed before the next command is executed. Overlapped commands are executed in parallel with other commands. Commands that affect trigger actions are overlapped with subsequent commands sent to the electronic load. The *OPC command provides notification that all overlapped commands have been completed.
- All triggered actions are completed and the trigger system returns to the Idle state.

*OPC does not prevent processing of subsequent commands but bit 0 will not be set until all pending operations are completed. The query causes the interface to place an ASCII "1" in the Output Queue when all pending operations are completed.

Command Syntax	*OPC
Parameters	None
Query Syntax	*OPC?
Returned Parameters	<NR1>
Related Commands	*TRIG *WAI

*RCL

This command restores the electronic load to a state that was previously stored in memory with a *SAV command to the specified location. All states are recalled with the following exceptions:

- CAL:STATe is set to OFF
- The trigger system is set to the Idle state by an implied ABORt command (this cancels any incomplete trigger actions)

ManualsPlus.com

NOTE: The device state stored in location 0 is automatically recalled at power turn-on.

Command Syntax	*RCL <NRf>
Parameters	0 to 9
Example	*RCL3
Related Commands	*PSC *RST *SAV

*RST

This command resets **ALL** channels of the electronic load to the following factory-defined states:

CURR	MIN	RES:TRAN:BLEV	MIN
CURR:MODE	FIX	RES:TRAN:BWID	MIN
CURR:PROT:DEL	3	RES:TRAN:MODE	CONT
CURR:PROT:LEV	MAX	SENS:AVER:COUN	8
CURR:PROT:STAT	OFF	SENS:AVER:STAT	1
CURR:RANG	MAX	SENS:FUNC:CURR	DC
CURR:SLEW	MAX	SENS:NPLC	7
CURR:TRAN:ALEV	MAX	SENS:VOLT:RANG:AUTO	ON
CURR:TRAN:AWID	MIN	TRAC:FEED	TWO
CURR:TRAN:BLEV	MIN	TRAC:FEED:MODE	NEV
CURR:TRAN:BWID	MIN	TRAC:POIN	2
CURR:TRAN:MODE	CONT	TRAN	OFF
FUNC	CURR	TRIG:COUN	1
FUNC:MODE	FIX	TRIG:DEL	0
INP	OFF	VOLT	MAX
INP:SHOR	OFF	VOLT:ON	MIN
POW:CONF	MAX	VOLT:ON:LATC	ON
POW:PROT:DEL	3	VOLT:RANG	MAX
RES	MAX	VOLT:TRAN:ALEV	MAX
RES:RANG	MAX	VOLT:TRAN:AWID	MIN
RES:TRAN:ALEV	MAX	VOLT:TRAN:BWID	MIN
RES:TRAN:AWID	MIN	VOLT:TRAN:MODE	CONT

ManualsPlus.com

NOTE:

- *RST does not clear any of the status registers or the error queue, and does not affect any interface error conditions.
- *RST sets the trigger system to the Idle state.
- *RST clears the presently active list.

Command Syntax	*RST
Parameters	None
Related Commands	*PSC *SAV

*SAV

This command stores the present state of the electronic load to a specified location in memory. Up to 101 states can be stored.

If a particular state is desired at power-on, it should be stored in location 0. It will then be recalled at power-on if the power-on state is set to RCL0. Use *RCL to retrieve instrument states.

Command Syntax	*SAV <NRf>
Parameters	0 to 100
Example	*SAV 3
Related Commands	*PSC *RST *RCL

*SRE

This command sets the condition of the Service Request Enable register. This register determines which bits from the Status Byte Register (see *STB for its bit configuration) are allowed to set the Master Status Summary (MSS) bit and the Request for Service (RQS) summary bit. A 1 in any Service Request Enable register bit position enables the corresponding Status Byte register bit and all such enabled bits are then logically ORed to cause Bit 6 of the Status Byte Register to be set.

When the controller conducts a serial poll in response to SRQ, the RQS bit is cleared, but the MSS bit is not. When *SRE is cleared (by programming it with 0), the electronic load cannot generate an SRQ to the controller. The query returns the current state of *SRE.

Command Syntax	*SRE <NRf>
Parameters	0 to 255
Default Value	See *PSC
Example	*SRE 128
Query Syntax	*SRE?
Returned Parameters	<NR1> (register binary value)
Related Commands	*ESE *ESR *PSC

ManualsPlus.com

*STB?

This query reads the Status Byte register, which contains the status summary bits and the Output Queue MAV bit. Reading the Status Byte register does not clear it. The input summary bits are cleared when the appropriate event registers are read (see **1.4 Programming the Status Registers** for more information). A serial poll also returns the value of the Status Byte register, except that bit 6 returns Request for Service (RQS) instead of Master Status Summary (MSS). A serial poll clears RQS, but not MSS. When MSS is set, it indicates that the electronic load has one or more reasons for requesting service.

Query Syntax	*STB?
Parameters	None
Returned Parameters	<NR1> (register value)
Related Commands	*SRE *ESR *ESE

*TRG

This command generates a trigger to any system that has BUS selected as its source (for example, TRIG:SOUR BUS). The command has the same effect as the Group Execute Trigger (<GET>) command.

Command Syntax	*TRG
Parameters	None
Related Commands	ABOR INIT TRIG:IMM

*TST?

This query causes the electronic load to do a self-test and report any errors.

Query Syntax	TST?	
Parameters	None	
Related Commands	<NR1>	0 indicates the electronic load has passed self-test. Non-zero indicates an error code.

*WAI

This command instructs the electronic load not to process any further commands until all pending operations are completed. Pending operations are complete when:

- All commands sent before *WAI have been executed. This includes overlapped commands. Most commands are sequential and are completed before the next command is executed. Overlapped commands are executed in parallel with other commands. Commands that affect input voltage or state, relays, and trigger actions are overlapped with subsequent commands

ManualsPlus.com

sent to the electronic load. The *WAI command prevents subsequent commands from being executed before any overlapped commands have been completed.
- All triggered actions are completed and the trigger system returns to the Idle state.

*WAI can be aborted only by sending the electronic load a GPIB DCL (Device Clear) command.

Command Syntax	WAI?
Parameters	None
Related Commands	*OPC

3.3 Subsystem Commands

The following is a list of the SCPI subsystem commands and the table number where each command is summarized.

- Channel Commands
- Trigger Commands
- System Commands
- Status Commands
- Trace Commands
- Source Commands
- List Commands
- Measure Commands
- Sense Commands
- Calibrate Commands

General notes:
- Brackets ([ ]) are used to denote optional character sets. These optional characters do not have to be included in the program message. Do not use brackets in the program message.
- Angle brackets (< >) are used to indicate parameter type. Do not use angle brackets in the program message.
- The Boolean parameter (<b>) is used to enable or disable an instrument operation. 1 or ON enables the operation and 0 or OFF disables the operation.
- Upper case characters indicate the short-form version for each command word.
- Default Parameter — Listed parameters are both the *RST and :SYSTem:PRESet defaults, unless noted otherwise. Parameter notes are located at the end of each table.

ManualsPlus.com

Channel Commands

These commands program the channel selection capability of the electronic load. The CHANnel and INSTrument commands are equivalent.

CHANnel

This command selects the multiple electronic load channels to which all subsequent channel-specific commands will be directed. If the specified channel number does not exist or is outside the MIN/MAX range, an error code is generated (see **Chapter 5**). Refer to the installation section of the User's Guide for more information about channel number assignments.

Command Syntax	CHANnel <NR1>
Parameters	1-8
***RST Value**	MINimum
Examples	CHAN 3
Query Syntax	CHANnel?
Returned Parameters	<NR1>

CHANnel:ID?

Channel Specific

This query reads the model numbers of the modules installed in the mainframe. It returns the data in comma-separated fields.

Query Syntax	CHANnel:ID?		
Parameters	None		
Returned Parameters	<AARD>	**Field**	**Information**
		xxxxxx	model number
		xxxxxxxxxxxxxxxxxx	serial number or 0
		Verx.xx-x.xx	firmware revision

Example: MDL600, 600156010677530001, Ver1.35-1.20

ManualsPlus.com

Trigger Commands

The trigger subsystem is made up of a series of commands and subsystems to configure the trigger model.

ABORt

This command resets the list and measurement trigger systems to the idle state. Any list or measurement that is in progress is immediately aborted. ABORt also resets the WTG bit in the Operation Condition Status register. ABORt is executed at power turn-on and upon execution of *RCL, RST, or any implied abort command (see **List Commands**
).

NOTE: If INITiate:CONTinuous ON has been programmed, the trigger system initiates itself immediately after ABORt, thereby setting the WTG bit.

Command Syntax	ABORt
Parameters	None
Examples	ABOR
Related Commands	INIT *RST *TRG TRIG

INITiate

This command takes the electronic load out of the Idle state. After all programmed operations are completed, the instrument returns to the Idle state if continuous initiation is disabled. The command is not channel specific and applies to the entire mainframe. If the trigger system is not in the Idle state, then the command is ignored.

Command Syntax	INITiate[:IMMediate]
Parameters	None
Related Commands	ABOR INIT:CONT TRIG *TRG

ManualsPlus.com

INITiate:CONTinuous

When continuous initiation is selected (ON), the instrument is taken out of the Idle state. At the conclusion of all programmed operations, the instrument returns to the top of the trigger model.

Command Syntax	INITiate:CONTinuous <bool>
Parameters	0 | 1 | OFF | ON
Examples	INIT:CONT ON INIT:CONT 1
Query Syntax	INITiate:CONTinuous?
Returned Parameters	0 | 1
Related Commands	ABOR INIT:CONT TRIG *TRG

TRIGger

When the trigger system has been initiated, this command generates a trigger signal regardless of the selected trigger source. This command is not channel specific and applies to the entire mainframe.

Command Syntax	TRIGger[:IMMediate]
Parameters	None
Examples	TRIG
Related Commands	ABOR TRIG:SOUR TRIG:DEL TRIG:TIM

TRIGger:COUNt

Channel Specific

This command is used to specify how many times operation loops around in the trigger operation. For example, if the count is set to 10, operation continues to loop around until 10 device actions are performed and then proceeds back up to the start of the trigger model. Note that each loop places operation at the control source where it waits for the programmed event. This command only applies to the selected channel.

Command Syntax	TRIGger:COUNt <NRf+>
Parameters	1 – 9999 | MINimum | MAXimum | DEFault
***RST Value**	1
Examples	TRIG:COUN 2 TRIG: COUN MAX
Query Syntax	TRIGger:COUNT? [MINimum | MAXimum | DEFault]
Returned Parameters	<NR1>
Related Commands	ABOR TRIG TRIG:SOUR TRIG:TIM

ManualsPlus.com

TRIGger:DELay

Channel Specific

This command sets the time delay between the detection of a trigger signal and the start of any corresponding trigger action. After the time delay has elapsed, the trigger is implemented. This command only applies to the selected channel.

Command Syntax	TRIGger:DELay <NRf+>
Parameters	0 - 999999.99s | MINimum | MAXimum | DEFault
Unit	seconds
***RST Value**	0
Examples	TRIG:DEL .025 TRIG:DEL MAX
Query Syntax	TRIGger:DELay? [MINimum | MAXimum | DEFault]
Returned Parameters	<NR3>
Related Commands	ABOR TRIG TRIG:SOUR TRIG:TIM

TRIGger:SOURce

This command selects the trigger source. This command is not channel specific and applies to the entire mainframe.

BUS	Accepts a GPIB <GET> signal or a *TRG command as the trigger source. This selection guarantees that all previous commands are complete before the trigger occurs.
EXTernal	Selects the electronic load’s trigger input as the trigger source. This trigger is processed as soon as it is received.
HOLD	Only the TRIG:IMM command will generate a trigger in HOLD mode. All other trigger commands are ignored.
MANUal	The event occurs when the Trig key is pressed.
TIMer	This generates triggers that are in synchronization with the electronic load's internal oscillator as the trigger source. The internal oscillator begins running as soon as this command is executed. Use TRIG:TIM to program the oscillator period.

Command Syntax	TRIGger:SOURce <CRD>
Parameters	BUS | EXTernal | HOLD | MANUal | TIMer
***RST Value**	MANUal
Examples	TRIG:SOUR BUS TRIG:SOUR EXT
Query Syntax	TRIGger:SOURce?

ManualsPlus.com

Returned Parameters	<CRD>
Related Commands	ABOR TRIG TRIG:DEL

TRIGger:TIMer

This command specifies the period of the triggers generated by the internal trigger generator. This command is not channel specific and applies to the entire mainframe.

Command Syntax	TRIGger:TIMer <NRf+>
Parameters	1 to 999.99s | MINimum | MAXimum | DEFault
Unit	seconds
***RST Value**	0.001
Examples	TRIG:TIM 0.25 TRIG:TIM MAX
Query Syntax	TRIGger:TIMer? [MINimum | MAXimum | DEFault]
Returned Parameters	<NR3>
Related Commands	ABOR TRIG TRIG:SOUR TRIG:DEL

TRIGger:SIGNal

Channel Specific

This action command is used to bypass the specified control source when you do not wish to wait for the programmed event. Keep in mind that the instrument must be waiting for the appropriate event when the command is sent. Otherwise, an error occurs and this command is ignored.

Command Syntax	TRIGger:SIGNal <bool>
Parameters	0 | 1 | OFF | ON
Examples	TRIG:SIGN ON TRIG:SIGN 1
Query Syntax	TRIGger:SIGNal ?
Returned Parameters	0 | 1
Related Commands	ABOR INIT:CONT TRIG *TRG

SAMPle:COUNt

Channel Specific

This command specifies the sample count. The sample count defines how many times operation loops around in the trigger model to perform a device action.

Command Syntax	SAMPle:COUNt <NRf+>
Parameters	1 - 500 | MINimum | MAXimum | DEFault
***RST Value**	1

ManualsPlus.com

Examples	SAMP:COUN 2 SAMP:COUN MAX
Query Syntax	SAMPle:COUNt? [MINimum | MAXimum | DEFault]
Returned Parameters	<NR1>
Related Commands	ABOR TRIG TRIG:SOUR TRIG:TIM

System Commands

System commands control the system-level functions of the electronic load that are not directly related to input control or measurement functions.

SYSTem:PRESet

This command returns the instrument to states optimized for front panel operation.

Command Syntax	SYSTem:PRESet
Parameters	None

SYSTem:POSetup

This command is used to select the power-on defaults. With RST selected, the instrument powers up to the *RST default conditions. With the SAV0 parameter selected, the instrument powers-on to the setup that is saved in the specified location using the *SAV command.

Command Syntax	SYSTem:POSetup <CRD>
Parameters	RST | SAV0
***RST Value**	RST
Examples	SYST:POS RST
Query Syntax	SYSTem:POSetup?
Returned Parameters	<CRD>
Related Commands	*RST *SAV

SYSTem:VERSion?

This query returns the SCPI version number to which the electronic load complies. The value is of the form YYYY.V, where YYYY is the year and V is the revision number for that year.

Query Syntax	SYSTem:VERSion?
Parameters	None
Examples	SYST:VERS?
Returned Parameters	<NR2>

ManualsPlus.com

SYSTem:ERRor?

This query returns the next error number followed by its corresponding error message string from the remote programming error queue. The queue is a FIFO (first-in, first-out) buffer that stores errors as they occur. As it is read, each error is removed from the queue. When all errors have been read, the query returns “0, No Error”. If more errors are accumulated than the queue can hold, the last error in the queue is “-350, Too Many Errors”.

Query Syntax	SYSTem:ERRor?
Parameters	None
Examples	SYST:ERR?
Returned Parameters	<NR1>, <SRD>

SYSTem:CLEar

This action command is used to clear the Error Queue of messages.

Command Syntax	SYSTem:CLEar
Parameters	None
Examples	SYST:CLE
Related Commands	SYST:ERR?

SYSTem:LOCal

This command places the electronic load in local mode during RS-232 operation. The front panel keys are functional.

Command Syntax	SYSTem:LOCal
Parameters	None
Examples	SYST:LOC
Related Commands	SYST:REM SYST:RWL

SYSTem:REMote

This command places the electronic load in remote mode during RS-232 operation. This disables all front panel keys except the Local key. Pressing the Local key while in the remote state returns the front panel to the local state.

Command Syntax	SYSTem:REMote
Parameters	None
Examples	SYST:REM

ManualsPlus.com

Related Commands SYST:LOC SYST:RWL

SYSTem:RWLock

This command places the electronic load in remote mode during RS-232 operation. All front panel keys including the Local key are disabled. Use SYSTem:LOCal to return the front panel to the local state.

Command Syntax SYSTem:RWLock
Parameters None
Examples SYST:RWL
Related Commands SYST:REM SYST:LOC

Status Commands

These commands program the electronic load's status registers. The electronic load has five groups of status registers:

1. Channel Status
2. Channel Summary
3. Questionable Status
4. Standard Event Status
5. Operation Status

Refer to **1.4 Programming the Status Registers** for more information.

STATus:CHANnel?

Channel Specific

This query returns the value of the Channel Event register. The Event register is a read-only register, which holds (latches) all events that are passed into it. Reading the Channel Event register clears it.

Query Syntax STATus:CHANnel[:EVENt]?
Parameters None
Examples STAT:CHAN:EVEN?
Returned Parameters <NR1> (register value)

ManualsPlus.com

Related Commands *CLS

STATus:CHANnel:CONDition?

Channel Specific

This query returns the value of the Channel Condition register. The particular channel must first be selected by the CHAN command.

Query Syntax	STATus:CHANnel:CONDition?
Parameters	None
Examples	STAT:CHAN:COND?
Returned Parameters	<NR1> (register value)
Related Commands	STAT:CHAN?

STATus:CHANnel:ENABle

Channel Specific

This command sets or reads the value of the Channel Enable register for a specific channel. The particular channel must first be selected by the CHAN command.

Command Syntax	STATus:CHANnel:ENABle <NR1>
Parameters	0 to 65535
Examples	STAT:CHAN:ENAB 3
Query Syntax	STATus:CHANnel:ENABle?
Returned Parameters	<NR1> (register value)
Related Commands	*CLS

STATus:CSUM?

This query returns the value of the Channel Event summary register. The bits in this register correspond to a summary of the channel register for each input channel. Reading the Channel Event summary register clears it. This command is not channel specific and applies to the entire mainframe.

Query Syntax	STATus:CSUMmary[:EVENt]?
Parameters	None
Examples	STAT:CSUM:EVEN?
Returned Parameters	<NR1> (register value)
Related Commands	*CLS

ManualsPlus.com

STATus:CSUMmary:ENABle

This command sets or reads the value of the Channel Enable summary register. This command is not channel specific and applies to the entire mainframe.

Command Syntax	STATus:CSUMmary:ENABle <NR1>
Parameters	0 to 255
Examples	STAT:CSUM:ENAB 3
Query Syntax	STATus:CSUMmary:ENABle?
Returned Parameters	<NR1> (register value)
Related Commands	*CLS

STATus:OPERation?

This query returns the value of the Operation Event register. The Event register is a read-only register that holds (latches) all events that are passed by the Operation NTR and/or PTR filter. Reading the Operation Event register clears it. This command is not channel specific and applies to the entire mainframe.

Query Syntax	STATus:OPERation[:EVENt]?
Parameters	None
Examples	STAT:OPER:EVEN?
Returned Parameters	<NR1> (register value)
Related Commands	*CLS

STATus:OPERation:CONDition?

This query returns the value of the Operation Condition register. This is a read-only register that holds the real-time (unlatched) operational status of the electronic load. This command is not channel specific and applies to the entire mainframe.

Query Syntax	STATus:OPERation:CONDition?
Parameters	None
Examples	STAT:OPER:COND?
Returned Parameters	<NR1> (register value)
Related Commands	STAT:QUES:COND?

ManualsPlus.com

STATus:OPERation:ENABle

This command and its query can be used to set and read the value of the Operation Enable register. This register is a mask for enabling specific bits from the Operation Event register to set the operation summary bit (OPER) of the Status Byte register. The operation summary bit is the logical OR of all enabled Operation Event register bits. This command is not channel specific and applies to the entire mainframe.

Command Syntax	STATus:OPERation:ENABle <NR1>
Parameters	0 to 65535
Default Value	0
Examples	STAT:OPER:ENAB 32 STAT:OPER:ENAB 1
Query Syntax	STATus:OPERation:ENABle?
Returned Parameters	<NR1> (register value)
Related Commands	STAT:OPER?

STATus:QUEStionable?

This query returns the value of the Questionable Event register. The Event register is a read-only register that holds (latches) all events that pass into it. Reading the Questionable Event register clears it. This command is not channel specific and applies to the entire mainframe.

Query Syntax	STATus:QUEStionable[:EVENt]?
Parameters	None
Examples	STAT:QUES:EVEN?
Returned Parameters	<NR1> (register value)

STATus:QUEStionable:CONDition?

This query returns the value of the Questionable Condition register. This is a read-only register that holds the real-time (unlatched) questionable status of the electronic load. This command is not channel specific and applies to the entire mainframe.

Query Syntax	STATus:QUEStionable:CONDition?
Parameters	None
Examples	STAT:QUES:COND?
Returned Parameters	<NR1> (register value)

ManualsPlus.com

Related Commands STAT:OPER:COND?

STATus:QUEStionable:ENABle

This command sets or reads the value of the Questionable Enable register. This register is a mask for enabling specific bits from the Questionable Event register to set the questionable summary (QUES) bit of the Status Byte register. This bit (bit 3) is the logical OR of all the Questionable Event register bits that are enabled by the Questionable Status Enable register. This command is not channel specific and applies to the entire mainframe.

Command Syntax	STATus:QUEStionable:ENABle <NR1>
Parameters	0 to 65535
Default Value	0
Examples	STAT:QUES:ENAB 32 STAT:QUES:ENAB 1
Query Syntax	STATus:QUEStionable:ENABle?
Returned Parameters	<NR1> (register value)
Related Commands	STAT:QUES?

STATus:PRESet

When this command is sent, the SCPI event registers are affected as follows: All bits of the following registers are cleared to zero (0):

- Questionable Event Enable Register
- Channel summary Event Enable Register
- Operation Event Enable Register

NOTE: Registers not included in the list above are not affected by this command.

Command Syntax	STATus:PRESet
Parameters	None
Examples	STAT:PRES

Trace Commands

ManualsPlus.com

The commands in this subsystem are used to configure and control data storage into the buffer.

TRACe:CLEar

Channel Specific

This action command is used to clear the buffer of readings. If you do not clear the buffer, a subsequent store will overwrite the old readings. If the subsequent store is aborted before the buffer becomes full, you could end up with some “old” readings still in the buffer.

Command Syntax	TRACe:CLEar
Parameters	None
Example	TRAC:CLE

TRACe:FREE?

Channel Specific

This command is used to read the status of storage memory. After sending this command and addressing the electronic load to talk, two values separated by commas are sent to the computer. The first value indicates how many bytes of memory are available, and the second value indicates how many bytes are reserved to store readings.

Query Syntax	TRACe:FREE?
Returned Parameters	<NR1>, <NR1>
Examples	TRAC:FREE?

TRACe:POINts

Channel Specific

This command is used to specify the size of the buffer.

Command Syntax	TRACe:POINts <NRf+>
Parameters	0 to 2000 | MINimum | MAXimum | DEFault
***RST Value**	2000

ManualsPlus.com

Examples	TRAC:POIN 10
Query Syntax	TRACe: POINts? [MINimum | MAXimum | DEFault]
Returned Parameters	<NR1>
Related Commands	TRAC:FEED

TRACe:FEED

Channel Specific

This command is used to select the source of readings to be placed in the buffer. With VOLTage selected, voltage readings are placed in the buffer (TRAC:POIN maximum value is 2000). With CURRent selected, current readings are placed in the buffer (TRAC:POIN maximum value is 2000). With TWO selected, voltage and current are placed in the buffer when storage is performed (TRAC:POIN maximum value is 1000).

Command Syntax	TRACe:FEED <CRD>
Parameters	VOLTage | CURRent | TWO
***RST Value**	TWO
Examples	TRAC:FEED VOLT
Query Syntax	TRACe:FEED?
Returned Parameters	<CRD>
Related Commands	TRAC:POIN

TRACe:FEED:CONTrol

Channel Specific

This command is used to select the buffer control. With NEVer selected, storage into the buffer is disabled. When NEXT is selected, the storage process starts, fills the buffer and then stops. The buffer size is specified by the :POINts command.

Command Syntax	TRACe:FEED:CONTrol <CRD>
Parameters	NEVer | NEXT
***RST Value**	NEVer
Examples	TRAC:FEED:CONT NEXT
Query Syntax	TRACe: FEED:CONT?
Returned Parameters	<CRD>
Related Commands	TRAC:FEED

TRACe:DATA?

Channel Specific

When this command is sent and the electronic load is addressed to talk, all the readings stored in the

ManualsPlus.com

buffer are sent to the computer.

Query Syntax	TRACe:DATA?
Returned Parameters	{<NR3>}

TRACe:FILTer

Channel Specific

This command is used to select whether the data in buffer is filtered data.

Command Syntax	TRACe:FILTer[:STATe] <BOOL>
Parameters	0 | 1 | ON | OFF
***RST Value**	OFF
Examples	TRAC:FILT 1
Query Syntax	TRACe:FILTer[:STATe]?
Returned Parameters	<NR1>

TRACe:DELay

Channel Specific

This command is used to select the delay time for trigger in buffer.

Command Syntax	TRACe:DELay <NRf>
Parameters	0 to 3600s | MINimum | MAXimum | DEFault
Unit	S (second)
***RST Value**	0
Examples	TRAC:DEL 1
Query Syntax	TRACe:DELay? [MINimum | MAXimum | DEFault]
Returned Parameters	<NR3>

TRACe:TIMer

Channel Specific

This command is used to select the interval for timer.

Command Syntax	TRACe:TIMer <NRf>
Parameters	0.00002 to 3600s | MINimum | MAXimum | DEFault
Unit	S (second)
***RST Value**	1
Examples	TRAC:TIM 0.1

ManualsPlus.com

Query Syntax TRACe:TIMer? [MINimum | MAXimum | DEFault]
Returned Parameters <NR3>

Source Commands

These commands control the input of the electronic load. The INPut and OUTput commands are equivalent. The CURRent, RESistance, and VOLTage commands program the actual input current, resistance, and voltage.

[SOURce:]INPut:ALL

This command enables or disables all the inputs of the module. The state of a disabled input is a high impedance condition.

Command Syntax [SOURce:]INPut:ALL[:STATe] <bool>
Parameters 0 | 1 | OFF | ON
Examples INP:ALL 1

[SOURce:]INPut

Channel Specific

This command enables or disables the electronic load inputs. The state of a disabled input is a high impedance condition.

Command Syntax [SOURce:]INPut[:STATe] <bool>
Parameters 0 | 1 | OFF | ON
***RST Value** OFF
Examples INP 1
Query Syntax INPut[:STATe]?
Returned Parameters 0 | 1
Related Commands *RCL *SAV

[SOURce:]INPut:SYNCon

Channel Specific

This command enables or disables to change the electronic load inputs when INP:ALL command is received.

ManualsPlus.com

Command Syntax	[SOURce:]INPut:SYNCon[:STATe] <bool>
Parameters	0 | 1 | OFF | ON
***RST Value**	ON
Examples	INP:SYNC 1
Query Syntax	INPut:SYNCon[:STATe]?
Returned Parameters	0 | 1
Related Commands	INP:ALL

[SOURce:]INPut:SHORt

Channel Specific

This command programs the specified electronic load module to the maximum current that it can sink in the present operating range.

Command Syntax	[SOURce:]INPut:SHORt[:STATe] <bool>
Parameters	0 | 1 | OFF | ON
***RST Value**	OFF
Examples	INP:SHOR 1
Query Syntax	INPut:SHORt:STATe?
Returned Parameters	0 | 1
Related Commands	INP

[SOURce:]REMote:SENSe

Channel Specific

This command is used to select the remote measure mode for the load.

Command Syntax	[SOURce:]REMote:SENSe[:STATe] <bool>
Parameters	0 | 1 | OFF | ON
***RST Value**	0
Examples	REM:SENS 0
Query Syntax	[SOURce:]REMote:SENSe[:STATe]?
Returned Parameters	<CRD>

[SOURce:]FUNCtion

ManualsPlus.com

Channel Specific

This command selects the input regulation mode of the electronic load.

CURRent	constant current mode
RESistance	constant resistance mode
VOLTage	constant voltage mode

Command Syntax	[SOURce:] FUNCtion <function>
Parameters	CURRent | RESistance | VOLTage
***RST Value**	CURRent
Examples	FUNC RES
Query Syntax	[SOURce:]FUNCtion?
Returned Parameters	<CRD>

[SOURce:]FUNCtion:MODE

Channel Specific

This command determines whether the input regulation mode is controlled by values in a list or by the FUNCtion command setting.

FIXed	The regulation mode is determined by the FUNCtion or MODE command.
LIST	The regulation mode is determined by the active list.

Command Syntax	[SOURce:]FUNCtion:MODE <mode>
Parameters	FIXed | LIST
***RST Value**	FIXed
Examples	FUNC:MODE FIX
Query Syntax	[SOURce:]FUNCtion:MODE?
Returned Parameters	<CRD>
Related Commands	FUNC

[SOURce:]TRANsient

Channel Specific

This command turns the transient generator on or off.

Command Syntax	[SOURce:]TRANsient[:STATe] <bool>
Parameters	0 | 1 | OFF | ON
***RST Value**	OFF
Examples	TRAN 1

ManualsPlus.com

Query Syntax [SOURce:]TRANsient[:STATe]?
Returned Parameters 0 | 1
Related Commands CURR:TRAN:CURR:MODE CURR:TRAN:ALEV

[SOURce:]INPut:PROTection:CLEar

Channel Specific

This command clears the latch that disables the input when a protection condition such as overvoltage (OV) or overcurrent (OC) is detected. All conditions that generated the fault must be removed before the latch can be cleared. The input is then restored to the state it was in before the fault condition occurred.

Command Syntax [SOURce:]INPut:PROTection:CLEar
Parameters None
Examples INP:PROT:CLE

[SOURce:]INPut:TIMer

Channel Specific

These commands enable or disable the electronic load on timer.

Command Syntax [SOURce:]INPut:TIMer[:STATe] <bool>
Parameters 0 | 1 | OFF | ON
***RST Value** OFF
Examples INP:TIM 1
Query Syntax INPut:TIMer[:STATe]?
Returned Parameters 0 | 1
Related Commands INP:TIM:DEL

[SOURce:]INPut:TIMer:DELay

Channel Specific

This command specifies the timer setting.

Command Syntax [SOURce:]INPut:TIMer <NRf+>
Parameters 1 to 60000s | MINimum | MAXimum | DEFault
Unit seconds
***RST Value** 10
Examples INP:TIM:DEL 5
Query Syntax [SOURce:]INPut:TIMer:DELay? [MINimum | MAXimum |

ManualsPlus.com

	DEFault]
Returned Parameters	<NR3>
Related Commands	INP:TIM

[SOURce:]CURRent

Channel Specific

This command sets the current that the load will regulate when operating in constant current mode.

Command Syntax	[SOURce:]CURRent[:LEVel][:IMMediate] <NRf+>
Parameters	0 through MAX | MINimum | MAXimum | DEFault
Unit	A (amps)
***RST Value**	MINimum
Examples	CURR 5 CURR:LEV 0.5
Query Syntax	[SOURce:]CURRent[:LEVel][:IMMediate]? [MINimum | MAXimum | DEFault]
Returned Parameters	<NR3>
Related Commands	CURR:RANG

[SOURce:]CURRent:RANGe

Channel Specific

This command sets the current range of the electronic load module. There are two current ranges, high range (model dependent) and low range (model dependent).

When you program a range value, the load automatically selects the range that corresponds to the value that you program. If the value falls in a region where ranges overlap, the electronic load selects the range with the highest resolution.

NOTE: When this command is executed, the IMMediate, TRANsient, TRIGgered, and SLEW current settings are adjusted as follows.

- If existing settings are within new range, no adjustment is made.
- If existing settings are outside new range, the levels are set to the maximum value of the new range.

Command Syntax	[SOURce:]CURRent:RANGe <NRf+>
Parameters	0 through MAX | MINimum | MAXimum | DEFault
Unit	A (amps)
***RST Value**	MAXimum (high range)
Examples	SOUR:CURR:RANGE MIN
Query Syntax	[SOURce:]CURRent:RANGe? [MINimum | MAXimum |

ManualsPlus.com

	DEFault]
Returned Parameters	<NR3>
Related Commands	CURR CURR:SLEW

[SOURce:]CURRent:SLEW

Channel Specific

This command sets the slew rate for all programmed changes in the input current level of the electronic load. This command programs both positive and negative slew rates. MAXimum sets the slew to the fastest possible rate. MINimum sets the slew to the slowest rate.

Command Syntax	[SOURce:]CURRent:SLEW[:BOTH] <NRf+>
Parameters	MINimum to MAXimum | MAXimum | MINimum | DEFault
Unit	A (amps per micro second)
***RST Value**	MAXimum
Examples	CURR:SLEW MAX
Related Commands	CURR CURR:NEG CURR:SLEW:POS

[SOURce:]CURRent:SLEW:POSitive

Channel Specific

This command sets the slew rate of the current for positive transitions. MAXimum sets the slew to the fastest possible rate. MINimum sets the slew to the slowest rate.

Command Syntax	[SOURce:]CURRent:SLEW:POSitive <NRf+>
Parameters	0 to MAXimum | MAXimum | MINimum | DEFault
Unit	A (amps per micro second)
***RST Value**	MAXimum
Examples	CURR:SLEW:POS MAX
Query Syntax	[SOURce:]CURRent:SLEW:POSitive? [MINimum| MAXimum | DEFault]
Returned Parameters	<NR3>
Related Commands	CURR:SLEW

[SOURce:]CURRent:SLEW:NEGative

Channel Specific

This command sets the slew rate of the current for negative transitions. MAXimum sets the slew to the fastest possible rate. MINimum sets the slew to the slowest rate.

ManualsPlus.com

Command Syntax	[SOURce:]CURRent:SLEW:NEGative <NRf+>
Parameters	0 to MAXimum | MAXimum | MINimum | DEFault
Unit	A (amps per micro second)
***RST Value**	MAXimum
Examples	CURR:SLEW:NEG MAX
Query Syntax	[SOURce:]CURRent:SLEW:NEGative? [MINimum| MAXimum | DEFault]
Returned Parameters	<NR3>
Related Commands	CURR:SLEW

[SOURce:]CURRent:PROTection:STATe

Channel Specific

This command enables or disables the overcurrent protection feature.

Command Syntax	[SOURce:]CURRent:PROTection:STATe <Bool>
Parameters	0 | 1 | OFF | ON
***RST Value**	OFF
Examples	CURR:PROT:STAT 1
Query Syntax	[SOURce:]CURRent:PROTection:STATe?
Returned Parameters	<NR3>
Related Commands	CURR:PROT

[SOURce:]CURRent:PROTection

Channel Specific

This command sets the soft current protection level. If the input current exceeds the soft current protection level for the time specified by CURR:PROT:DEL, the input is turned off.

NOTE: Use CURR:PROT:DEL to prevent momentary current limit conditions caused by programmed changes from tripping the overcurrent protection.

Command Syntax	[SOURce:]CURRent:PROTection[:LEVel] <NRf+>
Parameters	0 through MAX | MINimum | MAXimum | DEFault
Unit	A (amps)
***RST Value**	MAXimum
Examples	CURR:PROT 2
Query Syntax	[SOURce:]CURRent:PROTection[:LEVel]? [MINimum |

ManualsPlus.com

	MAXimum | DEFault]
Returned Parameters	<NR3>
Related Commands	CURR:PROT:DEL CURR:PROT:STAT

[SOURce:]CURRent:PROTection:DELay

Channel Specific

This command specifies the time that the input current can exceed the protection level before the input is turned off.

Command Syntax	[SOURce:]CURRent:PROTection[:DELay] <NRf+>
Parameters	0 to 60 seconds | MINimum | MAXimum | DEFault
Unit	seconds
***RST Value**	0
Examples	CURR:PROT:DEL 5
Query Syntax	[SOURce:]CURRent:PROTection:DELay? [MINimum | MAXimum | DEFault]
Returned Parameters	<NR1>
Related Commands	CURR:PROT CURR:PROT:STAT

[SOURce:]CURRent:TRANsient:MODE

Channel Specific

This command selects the operating mode of the transient generator as follows in constant current mode.

CONTinuous	The transient generator puts out a continuous pulse stream after receipt of a trigger.
PULSe	The transient generator puts out a single pulse upon receipt of a trigger.
TOGGle	The transient generator toggles between two levels upon receipt of a trigger.

Command Syntax	[SOURce:]CURRent:TRANsient:MODE <mode>
Parameters	CONTinuous | PULSe | TOGGle
***RST Value**	CONTinuous
Examples	CURR:TRAN:MODE TOGG
Query Syntax	[SOURce:]CURRent:TRANsient:MODE?
Returned Parameters	<CRD>
Related Commands	CURR:TRAN:ALEV TRAN

[SOURce:]CURRent:TRANsient:ALEVel
[SOURce:]CURRent:TRANsient:BLEVel

Channel Specific

These commands specify the transient level of the input current. The transient function switches

ManualsPlus.com

between level A and level B.

Command Syntax	[SOURce:]CURRent:TRANsient:ALEVel <NRf+> [SOURce:]CURRent:TRANsient:BLEVel <NRf+>
Parameters	0 through MAX | MINimum | MAXimum | DEFault
Unit	A (amps)
***RST Value**	ALEVEL:MAXimum, BLEVel MINimum
Examples	CURR:TRAN:ALEV 5 CURR:TRAN:BLEV 0.5
Query Syntax	[SOURce:]CURRent:TRANsient:ALEVel? [MINimum | MAXimum | DEFault] [SOURce:]CURRent:TRANsient:BLEVel? [MINimum | MAXimum | DEFault]
Returned Parameters	<NR3>
Related Commands	CURR:

[SOURce:]CURRent:TRANsient:AWIDth
[SOURce:]CURRent:TRANsient:BWIDth

Channel Specific

These commands specify the transient pulse width of the input current.

Command Syntax	[SOURce:]CURRent:TRANsient:AWIDth <NRf+> [SOURce:]CURRent:TRANsient:BWIDth <NRf+>
Parameters	1 to 65535 us
Unit	S (seconds)
***RST Value**	500uS
Examples	CURR:TRAN:AWID 0.001 CURR:TRAN:BLEV 0.02
Query Syntax	[SOURce:]CURRent:TRANsient:AWIDth? [MINimum | MAXimum | DEFault] [SOURce:]CURRent:TRANsient:BWIDth? [MINimum | MAXimum | DEFault]
Returned Parameters	<NR3>
Related Commands	CURR:

[SOURce:]CURRent:HIGH
[SOURce:]CURRent:LOW

Channel Specific

These commands set the high and low voltage level when the load is in constant current mode.

Command Syntax	[SOURce:]CURRent:HIGH <NRf+> [SOURce:]CURRent:LOW <NRf+>
Parameters	MINimum through MAX | MINimum | MAXimum |

ManualsPlus.com

	DEFault
Unit	V (volts)
***RST Value**	MAXimum
Examples	CURR:HIGH 5
Query Syntax	[SOURce:]CURRent:HIGH?[MINimum|MAXimum|DEFault] [SOURce:]CURRent:LOW?[MINimum|MAXimum|DEFault]
Returned Parameters	<NR3>

[SOURce:]VOLTage

Channel Specific

This command sets the voltage that the electronic load will regulate when operating in constant voltage (CV) mode.

Command Syntax	[SOURce:]VOLTage[:LEVel][:IMMediate] <NRf+>
Parameters	MINimum through MAX | MINimum | MAXimum | DEFault
Unit	V (volts)
***RST Value**	MAXimum
Examples	VOLT 5
Query Syntax	[SOURce:]VOLTage[:LEVel][:IMMediate]? [MINimum | MAXimum | DEFault]
Returned Parameters	<NR3>
Related Commands	VOLT:RANG

[SOURce:]VOLTage:RANGe

Channel Specific

This command sets the voltage range of the electronic load module. There is only one voltage range.

Command Syntax	[SOURce:] VOLTage:RANGe <NRf+>
Parameters	MINimum through MAX | MINimum | MAXimum | DEFault
Unit	V (volts)
***RST Value**	MAXimum
Examples	VOLT:RANG 15
Query Syntax	[SOURce:]VOLTage:RANGe? [MINimum | MAXimum | DEFault]
Returned Parameters	<NR3>

ManualsPlus.com

Related Commands VOLT

[SOURce:]VOLTage:RANGe:AUTO[:STATe]

Channel Specific

This command sets the voltage auto range state of the electronic load module.

Command Syntax	[SOURce:]VOLTage:RANGe:AUTO[:STATe] <bool>
Parameters	0 | 1 | ON | OFF
***RST Value**	1
Examples	VOLT:RANG:AUTO 1
Query Syntax	[SOURce:]VOLTage:RANGe:AUTO[:STATe]?
Returned Parameters	<NR1>

[SOURce:]VOLTage:ON

Channel Specific

This command sets the voltage of sink current on.

Command Syntax	[SOURce:]VOLTage[:LEVel]:ON <NRf+>
Parameters	0 through MAX | MINimum | MAXimum | DEFault
Unit	V (volts)
***RST Value**	MINimum
Examples	VOLT 5
Query Syntax	[SOURce:]VOLTage[:LEVel]:ON? [MINimum | MAXimum | DEFault]
Returned Parameters	<NR3>
Related Commands	VOLT:LATCh

[SOURce:]VOLTage:LATCh

Channel Specific

This command sets the action type of Von.

Command Syntax	[SOURce:]VOLTage:LATCh[:STATe] <b>
Parameters	0 | 1 | ON | OFF
***RST Value**	ON
Examples	VOLT:LATC 1
Query Syntax	[SOURce:] VOLTage:LATCh[:STATe]? [MINimum | MAXimum | DEFault]

ManualsPlus.com

Returned Parameters	0 | 1
Related Commands	VOLT:ON

[SOURce:]VOLTage:HIGH
[SOURce:]VOLTage:LOW

Channel Specific

These commands set the high and low current limit when the load is in constant voltage mode.

Command Syntax	[SOURce:]VOLTage:HIGH <NRf+> [SOURce:]VOLTage:LOW <NRf+>
Parameters	MINimum through MAX | MINimum | MAXimum | DEFault
Unit	A (amps)
***RST Value**	MAXimum
Examples	VOLT:HIGH 5
Query Syntax	[SOURce:]VOLTage:HIGH? [MINimum|MAXimum|DEFault] [SOURce:]VOLTage:LOW? [MINimum|MAXimum|DEFault]

[SOURce:]VOLTage:TRANsient:MODE

Channel Specific

This command selects the operating mode of the transient generator as follows in constant voltage mode.

CONTinuous	The transient generator puts out a continuous pulse stream after receipt of a trigger.
PULSe	The transient generator puts out a single pulse upon receipt of a trigger.
TOGGle	The transient generator toggles between two levels upon receipt of a trigger.

Command Syntax	[SOURce:]VOLTage:TRANsient:MODE <mode>
Parameters	CONTinuous | PULSe | TOGGle
***RST Value**	CONTinuous
Examples	VOLT:TRAN:MODE PULS
Query Syntax	[SOURce:] VOLTage:TRANsient:MODE?
Returned Parameters	<CRD>
Related Commands	VOLT:TRAN:ALEV TRAN

[SOURce:]VOLTage:TRANsient:ALEVel

[SOURce:]VOLTage:TRANsient:BLEVel

ManualsPlus.com

Channel Specific

These commands specify the transient level of the input voltage. The transient function switches between level A and level B.

Command Syntax	[SOURce:]VOLTage:TRANsient:ALEVel <NRf+> [SOURce:]VOLTage:TRANsient:BLEVel <NRf+>
Parameters	MINimum through MAX | MINimum | MAXimum | DEFault
Unit	V (volts)
***RST Value**	ALEVEL MAXimum, BLEVel MINimum
Examples	VOLT:TRAN:ALEV 5 VOLT:TRAN:BLEV 0.5
Query Syntax	[SOURce:]VOLTage:TRANsient:ALEVel? [MINimum | MAXimum | DEFault] [SOURce:]VOLTage:TRANsient:BLEVel? [MINimum | MAXimum | DEFault]
Returned Parameters	<NR3>
Related Commands	VOLT

[SOURce:]VOLTage:TRANsient:AWIDth

[SOURce:]VOLTage:TRANsient:BWIDth

Channel Specific

This command specifies the transient pulse width of the input voltage.

Command Syntax	[SOURce:]VOLTage:TRANsient:AWIDth <NRf+> [SOURce:]VOLTage:TRANsient:BWIDth <NRf+>
Parameters	1 to 65535 us
Unit	S (second)
***RST Value**	500uS
Examples	VOLT:TRAN:AWID 0.001 VOLT:TRAN:BWID 0.02
Query Syntax	[SOURce:] VOLTage:TRANsient:AWIDth? [MINimum | MAXimum | DEFault] [SOURce:]VOLTage:TRANsient:BWIDth? [MINimum | MAXimum | DEFault]
Returned Parameters	<NR3>
Related Commands	VOLT

[SOURce:]RESistance

Channel Specific

This command sets the resistance of the electronic load when operating in constant resistance mode.

ManualsPlus.com

Command Syntax	[SOURce:]RESistance[:LEVel][:IMMediate] <NRf+>
Parameters	MINimum through MAX | MINimum | MAXimum | DEFault
Unit	Ω (ohms)
***RST Value**	MAXimum
Examples	RES 5 RES:LEV 3.5
Query Syntax	[SOURce:]RESistance[:LEVel][:IMMediate]? [MINimum | MAXimum | DEFault]
Returned Parameters	<NR3>
Related Commands	RES:RANG

[SOURce:]RESistance: RANGe

Channel Specific

This command sets the resistance range of the electronic load module. There are two resistance ranges with values that are model dependent.

When you program a range value, the electronic load automatically selects the range that corresponds to the value that you program. If the value falls in a region where ranges overlap, the electronic load selects the range with the highest resolution.

NOTE: When this command is executed, the IMMediate, TRANsient, TRIGgered, and SLEW resistance settings are adjusted as follows.
If existing settings are within new range, no adjustment is made.
If existing settings are outside new range, the levels are set to either the maximum or minimum value of the new range, depending on which they are closest to.

Command Syntax	[SOURce:]RESistance:RANGe <NRf+>
Parameters	MINimum through MAX | MINimum | MAXimum | DEFault
Unit	Ω (ohms)
***RST Value**	MAXimum (high range)
Examples	RES:RANG 15 SOUR:RES:RANGE MIN
Query Syntax	[SOURce:]RESistance:RANGe? [MINimum | MAXimum | DEFault]
Returned Parameters	<NR3>
Related Commands	RES RES:SLEW

ManualsPlus.com

ManualsPlus.com

[SOURce:]RESistance:HIGH
[SOURce:]RESistance:LOW

Channel Specific

This command is used to set the voltage high and low limit determined when the load is in constant resistance mode.

Command Syntax	[SOURce:]RESistance:HIGH <NRf+> [SOURce:]RESistance:LOW <NRf+>
Parameters	MINimum through MAX | MINimum | MAXimum | DEFault
Unit	V (volts)
***RST Value**	MAXimum
Examples	RES:HIGH 5
Query Syntax	[SOURce:]RESistance:HIGH?[MINimum|MAXimum|DEFault] [SOURce:]RESistance:LOW?[MINimum|MAXimum|DEFault]
Returned Parameters	<NR3>

[SOURce:]RESistance:TRANsient:MODE

Channel Specific

This command selects the operating mode of the transient generator as follows in constant resistance mode.

CONTinuous	The transient generator puts out a continuous pulse stream upon receipt of a trigger.
PULSe	The transient generator puts out a single pulse upon receipt of a trigger.
TOGGle	The transient generator toggles between two levels upon receipt of a trigger.

Command Syntax	[SOURce:]RESistance:TRANsient:MODE <mode>
Parameters	CONTinuous | PULSe | TOGGle
***RST Value**	CONTinuous
Examples	RES:TRAN:MODE PULS
Query Syntax	[SOURce:]RESistance:TRANsient:MODE?
Returned Parameters	<CRD>
Related Commands	RES:TRAN:ALEV TRAN

ManualsPlus.com

[SOURce:]RESistance:TRANsient:ALEVel

[SOURce:]RESistance:TRANsient:BLEVel

Channel Specific

This command specifies the transient level of the input resistance. The transient function switches between level A and level B.

Command Syntax	[SOURce:]RESistance:TRANsient:ALEVel <NRf+> [SOURce:]RESistance:TRANsient:BLEVel <NRf+>
Parameters	MINimum through MAX | MINimum | MAXimum | DEFault
Unit	Ω (ohms)
***RST Value**	ALEVEL:MAXimum, BLEVel MINimum
Examples	RES:TRAN:ALEV 5 RES:TRAN:BLEV 0.5
Query Syntax	[SOURce:]RESistance:TRANsient:ALEVel? [MINimum | MAXimum | DEFault] [SOURce:]RESistance:TRANsient:BLEVel? [MINimum | MAXimum | DEFault]
Returned Parameters	<NR3>
Related Commands	RES

[SOURce:]RESistance:TRANsient:AWIDth

[SOURce:]RESistance:TRANsient:BWIDth

Channel Specific

This command specifies the transient pulse width of the input resistance.

Command Syntax	[SOURce:]RESistance:TRANsient:AWIDth <NRf+> [SOURce:]RESistance:TRANsient:BWIDth <NRf+>
Parameters	1 to 65535 us
Unit	S (second)
***RST Value**	500 uS
Examples	RES:TRAN:AWID 0.001 RES:TRAN:BWID 0.02
Query Syntax	[SOURce:]RESistance:TRANsient:AWIDth? [MINimum | MAXimum | DEFault] [SOURce:]RESistance:TRANsient:BWIDth? [MINimum | MAXimum | DEFault]
Returned Parameters	<NR3>
Related Commands	RES

ManualsPlus.com

[SOURce:]POWer

Channel Specific

This command sets the power of the load when operating in constant power mode.

Command Syntax	[SOURce:]POWer[:LEVel][:IMMediate] <NRf+>
Parameters	MINimum through MAX | MINimum | MAXimum | DEFault
Unit	W (power)
***RST Value**	MINimum
Examples	POW 5 POW:LEV 3.5
Query Syntax	[SOURce:]POWer[:LEVel][:IMMediate]? [MINimum | MAXimum | DEFault]
Returned Parameters	<NR3>
Related Commands	POW:RANG

[SOURce:]POWer:RANGe

Channel Specific

This command sets the power range of the load.

Command Syntax	[SOURce:]POWer:RANGe <NRf+>
Parameters	MINimum through MAX | MINimum | MAXimum | DEFault
Unit	W (power)
***RST Value**	MAXimum (high range)
Examples	POW:RANG 15 SOUR:POW:RANGE MIN
Query Syntax	[SOURce:]POWer:RANGe? [MINimum | MAXimum | DEFault]
Returned Parameters	<NR3>

[SOURce:]POWer:HIGH

[SOURce:]POWer:LOW

Channel Specific

This command sets the voltage high and low limit determined when in constant power mode.

ManualsPlus.com

Command Syntax	[SOURce:]POWer:HIGH <NRf+> [SOURce:]POWer:LOW <NRf+>
Parameters	MINimum through MAX | MINimum | MAXimum | DEFault
Unit	V (volts)
***RST Value**	MAXimum
Examples	POW:HIGH 5
Query Syntax	[SOURce:]POWer:HIGH? [MINimum|MAXimum|DEFault] [SOURce:]POWer:LOW? [MINimum|MAXimum|DEFault]
Returned Parameters	<NR3>

[SOURce:]POWer:PROTection

Channel Specific

This command sets the soft power protection level. If the input power exceeds the soft power protection level for the time specified by POW:PROT:DEL, the input is turned off.

NOTE: Use POW:PROT:DEL to prevent momentary power limit conditions caused by programmed changes from tripping the overpower protection.

Command Syntax	[SOURce:]POWer:PROTection[:LEVel] <NRf+>
Parameters	0 through MAX | MINimum | MAXimum | DEFault
Unit	W (power)
***RST Value**	MAXimum
Examples	POW:PROT 100
Query Syntax	[SOURce:]POWer:PROTection[:LEVel]? [MINimum | MAXimum | DEFault]
Returned Parameters	<NR3>
Related Commands	POW:PROT:DEL

[SOURce:]CURRent:PROTection:DELay

Channel Specific

This command specifies the time that the input power can exceed the protection level before the input is turned off.

Command Syntax	[SOURce:]POWer:PROTection:DELay] <NRf+>
Parameters	0 to 60 seconds | MINimum | MAXimum | DEFault

ManualsPlus.com

Unit	seconds
***RST Value**	0
Examples	POW:PROT:DEL 5
Query Syntax	[SOURce:]POWer:PROTection:DELay? [MINimum | MAXimum | DEFault]
Returned Parameters	<NR1>
Related Commands	POW:PROT

[SOURce:]POWer:CONFig

Channel Specific

This command sets the hard power protection level.

Command Syntax	[SOURce:]POWer:CONFig[:LEVel] <NRf+>
Parameters	0 through MAX | MINimum | MAXimum | DEFault
Unit	W (power)
***RST Value**	MAXimum
Examples	POW:CONFig 100
Query Syntax	[SOURce:]POWer:CONFig[:LEVel]? [MINimum | MAXimum | DEFault]
Returned Parameters	<NR3>
Related Commands	POW:PROT

[SOURce:]IMPedance

Channel Specific

This command sets the resistance value when in CZ mode.

Command Syntax	[SOURce:]IMPedance[:LEVel][:IMMediate] <NRf+>
Parameters	MINimum through MAX | MINimum | MAXimum | DEFault
Unit	R (ohms)
***RST Value**	MAXimum
Examples	IMP 5 IMP:LEV 3.5
Query Syntax	[SOURce:]IMPedance[:LEVel][:IMMediate]? [MINimum | MAXimum | DEFault]
Returned Parameters	<NR3>
Related Commands	IMP:RANG

ManualsPlus.com

[SOURce:]IMPedance:RANGe

Channel Specific

This command is used to set the resistance range when the load is in CZ mode.

Command Syntax	[SOURce:]IMPedance:RANGe <NRf+>
Parameters	MINimum through MAX | MINimum | MAXimum | DEFault
Unit	R (ohms)
***RST Value**	MAXimum (high range)
Examples	IMP:RANG 15 SOUR:IMP:RANGE MIN
Query Syntax	[SOURce:]IMPedance:RANGe? [MINimum | MAXimum | DEFault]
Returned Parameters	<NR3>

[SOURce:]IMPedance:RESistance

Channel Specific

This command is used to set the resistance value series to the capacitance when the load is in CZ mode.

Command Syntax	[SOURce:]IMPedance:RESistance <NRf+>
Parameters	0 through MAX | MINimum | MAXimum | DEFault
Unit	R (ohms)
***RST Value**	0
Examples	IMP:RES 5
Query Syntax	[SOURce:]IMPedance:RESistance? [MINimum | MAXimum | DEFault]
Returned Parameters	<NR3>

[SOURce:]IMPedance:INDuction

Channel Specific

This command is used to set the resistance value series to the capacitance when the load is in CZ mode.

Command Syntax	[SOURce:]IMPedance:INDuction <NRf+>
Parameters	0 through 65000uH | MINimum | MAXimum | DEFault
Unit	uH

ManualsPlus.com

***RST Value**	0
Examples	IMP:IND 5
Query Syntax	[SOURce:]IMPedance:INDuction? [MINimum | MAXimum | DEFault]
Returned Parameters	<NR3>

[SOURce:]IMPedance:CAPacitance

Channel Specific

This command is used to set the capacitance value when the load is in CZ mode.

Command Syntax	[SOURce:]IMPedance:CAPacitance <NRf+>
Parameters	20 through 65000uF | MINimum | MAXimum | DEFault
Unit	uF
***RST Value**	MINimum
Examples	IMP:CAP 5
Query Syntax	[SOURce:]IMPedance:CAPacitance? [MINimum | MAXimum | DEFault]
Returned Parameters	<NR3>

[SOURce:]IMPedance:HIGH
[SOURce:]IMPedance:LOW

This command is used to set the high and low voltage determined when the load is in CZ mode.

Command Syntax	[SOURce:]IMPedance:HIGH <NRf+> [SOURce:]IMPedance:LOW <NRf+>
Parameters	MINimum through MAX | MINimum | MAXimum | DEFault
Unit	V (volts)
***RST Value**	MAXimum
Examples	IMP:HIGH 5
Query Syntax	[SOURce:]IMPedance:HIGH? [MINimum|MAXimum|DEFault] [SOURce:]IMPedance:LOW? [MINimum|MAXimum|DEFault]
Returned Parameters	<NR3>

ManualsPlus.com

List Commands

List commands allow you to program complex sequences of input changes with rapid, precise timing, and synchronized with trigger signals. Each function for which lists can be generated has a list of values that specify the input at each list step.

[SOURce:]LIST:FUNCtion

Channel Specific

These equivalent commands specify the regulation mode for list step

CURR	constant current mode
RES	constant resistance mode
VOLT	constant voltage mode

Command Syntax	[SOURce:]LIST:FUNCtion <function>
Parameters	CURRent | RESistance | VOLTage
Examples	LIST:FUNC RES
Query Syntax	[SOURce:]LIST:FUNCtion?
Returned Parameters	<CRD>
Related Commands	FUNC

[SOURce:]LIST:RANGe

Channel Specific

This command sets the range for list mode. When VOLTage is selected, this sets the voltage range. When CURRent is selected, this sets the current range. When RESistance is selected, this sets the resistance range.

Command Syntax	[SOURce:]LIST:RANGe <NRf>
Parameters	MIN through MAX
Unit	None
Examples	LIST:RANGE 30
Query Syntax	[SOURce:]LIST:RANGe?
Returned Parameters	<NR3>
Related Commands	LIST:LEV

ManualsPlus.com

[SOURce:]LIST:COUNt

Channel Specific

This command sets the number of times that the list is executed before it is completed. The command accepts parameters in the range 1 through 65536, but 65536 is interpreted as infinity.

Command Syntax	[SOURce:]LIST:COUNt <NRf+>
Parameters	1 to 65536 | MINimum | MAXimum
Examples	LIST:COUN 3
Query Syntax	[SOURce:]LIST:COUNt? [MINimum | MAXimum]
Returned Parameters	<NR3>
Related Commands	LIST:STEP

[SOURce:]LIST:STEP

Channel Specific

This command sets the steps of the list.

Command Syntax	[SOURce:]LIST:STEP <NRf+>
Parameters	2 to 255 | MINimum | MAXimum
Examples	LIST:STEP 5
Query Syntax	[SOURce:]LIST:STEP? [MINimum | MAXimum]
Returned Parameters	<NR3>
Related Commands	LIST:LEV

[SOURce:]LIST:LEVel?

Channel Specific

This command specifies the setting for each list step.

Command Syntax	[SOURce:]LIST:LEVel <NR1>, <NRf>
Parameters	1 to steps, MIN to MAX
Unit	None, None
Examples	LIST:LEV 1, 10 LIST:LEV 2, 15.2
Query Syntax	[SOURce:]LIST:LEVel? <NR1>
Returned Parameters	<NR3>
Related Commands	LIST:RANG

ManualsPlus.com

[SOURce:]LIST:SLEW

Channel Specific

This command sets the slew rate for each step. This command programs both positive and negative going slew rates. MAXimum sets the slew to its fastest possible rate. MINimum sets the slew to its slowest rate. LIST:SLEW? returns the number of points programmed.

Command Syntax	[SOURce:]LIST:SLEW[:BOTH] <NR1>, <NRf>
Parameters	1 to steps, MIN to MAX
Unit	None, None
Examples	LIST:SLEW 1, 1.5 LIST:SLEW 2, MAX
Query Syntax	[SOURce:]LIST:SLEW[:BOTH]? <NR1>
Returned Parameters	<NR3>
Related Commands	CURR:SLEW RES:SLEW

[SOURce:]LIST:WIDth

Channel Specific

This command sets the sequence of list dwell times. Each value represents the time in seconds that the input will remain at the particular list step point before completing the step. If times exceed 16383S, the input remains at the present level until a trigger sequences the next point in the list. Else At the end of the dwell time, the input automatically changes to the next point in the list.

Command Syntax	[SOURce:]LIST:WIDth <NR1>, <NRf>
Parameters	1 to steps, 1uS to max
Unit	None, s (seconds)
Examples	LIST:WID 1, 0.02 LIST:WID 2, 0.5
Query Syntax	[SOURce:]LIST:WIDth? <NR1>
Returned Parameters	<NR3>

[SOURce:]LIST:SAV

Channel Specific

This command stores the present list file of the electronic load to a specified location in memory. Up to 5 files can be stored. Files saved in locations 1-7 are nonvolatile and the data will be saved when power is removed.

Command Syntax	[SOURce:]LIST:SAV <NR1>
Parameters	1 to 7

ManualsPlus.com

Examples	LIST:SAV 3
Related Commands	LIST:RCL

[SOURce:]LIST:RCL

Channel Specific

This command restores a list file that was previously stored in memory with a LIST:SAV command to the specified location.

Command Syntax	[SOURce:]LIST:RCL <NR1>
Parameters	1 to 7
Examples	LIST:RCL 3
Related Commands	LIST:SAV

Measurement Commands

The signal-oriented measurement commands are used to acquire readings. You can use these high-level instructions to control the measurement process.

Making Measurements
The electronic load has the ability to make several types of voltage or current measurements. The measurement capabilities of the electronic load are particularly useful with applications that draw current in pulses.

All measurements are performed by digitizing the instantaneous input voltage or current for a defined number of samples and sample interval, storing the results in a buffer, and then calculating the measured result. Many parameters of the measurement are programmable. These include the number of samples, the time interval between samples, and the method of triggering. Note that there is a tradeoff between these parameters and the speed, accuracy, and stability of the measurement in the presence of noise.

There are two ways to make measurements:

1) Use the MEASure commands to immediately start acquiring new voltage or current data, and return measurement calculations from this data as soon as the buffer is full. This is the easiest way to make measurements, since it requires no explicit trigger programming.
2) Use an acquisition trigger to acquire the data. Then use the FETCh commands to return calculations from the data that was retrieved by the acquisition trigger. This method gives

ManualsPlus.com

you the flexibility to synchronize the data acquisition with a trigger. FETCh commands do not trigger the acquisition of new measurement data, but they can be used to return many different calculations from the data that was retrieved by the acquisition trigger.

Making triggered measurements with the acquisition trigger system is discussed in the User Manual.

NOTE: For each MEASure form of the query, there is a corresponding query that begins with the header FETCh. FETCh queries perform the same calculation as their MEASure counterparts, but do not cause new data to be acquired. Data acquired by an explicit trigger or a previously programmed MEASure command are used.

:CONFigure:CURRent[:DC]
:CONFigure:CURRent:MAX

Channel Specific

These commands configure the instrument for subsequent measurements on the specified function. Basically, this command places the instrument in a “one-shot” measurement mode. You then use the :READ? command to trigger a measurement and acquire a reading (see :READ?).

When this command is sent, the electronic load will be configured as follows:

- The function specified by this command is selected.
- All controls related to the selected function are defaulted to the *RST values.
- Continuous initiation is disabled (:INITiate:CONTinuous OFF).
- The trigger source is Bypass (:TRIGger:SIGNal ON).
- The count values of the trigger model are set to one.
- The delay of the trigger model is set to zero.
- The electronic load trigger model is placed in the idle state.
- Buffer operation is disabled. A storage operation currently in process will be aborted.

This command is automatically asserted when the :MEASure? command is sent.

Query Syntax	:CONFigure:CURRent?
Parameters	None

:FETCh:VOLTage?
:FETCh:CURRent?
:FETCh:POWer[:DC]?

ManualsPlus.com

Channel Specific

These query commands request the latest post-processed readings stored in the sample buffer. After sending this command and addressing the electronic load to talk, the readings are sent to the computer. This command does not affect the instrument setup. This command does not trigger source-measure operations; it simply requests the last available readings. Note that this command can repeatedly return the same readings. Until there are new readings, this command continues to return the old readings.

For example, assume that the electronic load performed 20 measure operations. The :FETCh:VOLTage? command will request the readings for those 20 measure operations. If :FETCh:VOLTage? is sent while performing measure operations (ARM annunciator on), it will not be executed until the electronic load goes back to the idle state.

This command is automatically asserted when the :READ? or MEASure? command is sent.

:READ:VOLTage?
:READ:CURRent?

Channel Specific

These commands are used to trigger and acquire readings. The number of readings depends on how the trigger model is configured. For example, if configured for 20 measure operations (arm count 1, trigger count 20), then 20 sets of readings will be acquired after the electronic load returns to the idle state. When this command is sent, the following commands execute in the order that they are presented:

:ABORt
:INITiate
:FETCh:VOLTage? Or :FETCh:CURRent?

When :ABORt is executed, the instrument goes into the idle state if continuous initiation is disabled. If continuous initiation is enabled, the operation restarts to the beginning of the trigger model. The :INITiate command starts operation by taking the instrument out of idle. After all measure operations are completed, the electronic load goes back into idle at which time the :FETCh? command is executed. The readings are sent to the computer and displayed when the electronic load is addressed to talk.

:MEASure:VOLTage[:DC]?
:MEASure:CURRent[:DC]?
:MEASure:CURRent:MAX?

Channel Specific

ManualsPlus.com

These commands combine other signal-oriented measurement commands to perform a “one-shot” measurement and acquire the reading. Note that if a function is not specified, the measurement will be done on the function that is presently selected.

When this command is sent, the following commands execute in the order that they are presented:

:ABORt
:CONFigure:CURRent:<function>
:READ?

When :ABORt is executed, the instrument goes into the idle state if continuous initiation is disabled. If continuous initiation is enabled, the operation restarts to the beginning of the trigger model. When :CONFigure:CURRent:<function> is executed, the instrument goes into a “one-shot” measurement mode. See :CONFigure:CURRent:<function> for more details.

When :READ? is executed, its operations will then be performed. In general, another :ABORt is performed, then an :INITiate, and finally a FETCh? to acquire the readings. See :READ? for more details.

:MEASure:ALLVoltage?
:MEASure:ALLCurrent?

These commands combine the voltage or current measured at the input of all electronic load modules.

:FETch :ALLVoltage?
:FETch:ALLCurrent?

These commands combine the real-time voltage or current measured at the input of all electronic load modules.

Sense Commands

The Sense subsystem is used to configure and control the measurement functions of the electronic load. A function does not have to be selected before you program its various configurations. A function can be selected any time after it has been programmed. Whenever a programmed function is selected, it assumes the programmed states.

ManualsPlus.com

SENSe:AVERage:COUNt

Channel Specific

The command is used to specify the filter count. In general, the filter count is the number of readings that are acquired and stored in the filter buffer for the averaging calculation. The larger the filter count, the more filtering that is performed.

Command Syntax	SENSe:AVERage:COUNt <NRf+>
Parameters	1 to 100 | MINimum | MAXimum | DEFault
***RST Value**	8
Examples	SENS:AVER:COUN 10
Query Syntax	SENSe:AVERage:COUNt? [MINimum | MAXimum | DEFault]
Returned Parameters	<NR1>
Related Commands	SENS:AVER SENS:AVER:TCON

SENSe:VOLTage[:DC]:RANGe:AUTO

Channel Specific

This command is used to control auto ranging. With auto ranging enabled, the instrument automatically goes to the most sensitive range to perform the measurement.

The auto range command (:RANGe:AUTO) is coupled to the command that manually selects the measurement range (:RANGe <n>). When auto range is enabled, the parameter value for :RANGe <n> changes to the automatically selected range value. Thus, when auto range is disabled, the instrument remains at the automatically selected range. When a valid:RANGe <n> command is sent, auto ranging disables.

Command Syntax	SENSe:VOLTage[:DC]:RANGe:AUTO <bool>
Parameters	0 | 1 | OFF | ON
***RST Value**	ON
Examples	SENS:VOLT:RANG:AUTO 1
Query Syntax	SENSe:VOLTage[: DC]:RANGe:AUTO?
Returned Parameters	0 | 1
Related Commands	SENS:VOLT:RANG

ManualsPlus.com

Calibration Commands

Calibration commands allow you to:

- Enable and disable the calibration mode.
- Calibrate the input functions, current monitor offset and gain, and store new calibration constants in nonvolatile memory.

CALibrate:SECure[:STATe]

Channel Specific

This command enables and disables calibration mode. The calibration mode must be enabled before the electronic load will accept any other calibration commands. The first parameter specifies the enabled or disabled state. The second parameter is the password. It is required if the calibration mode is being enabled and the existing password is not 0. If the password is not entered or is incorrect, an error is generated and the calibration mode remains disabled.

The query statement returns only the state, not the password. Whenever the calibration state is changed from enabled to disabled, any new calibration constants are lost unless they have been stored with CALibrate:SAVE.

Command Syntax	CALibrate:SECure[:STATe] <bool> [,<SRD>]
Parameters	0 | 1 | OFF | ON [,<password>]
***RST Value**	ON
Examples	CAL:SEC 0, 8601 CAL:SEC ON
Query Syntax	CALibrate:SECure[:STATe]?
Returned Parameters	<NR1>
Related Commands	CAL:SAVE CAL:INIT

CALibrate: INITial

Channel Specific

This command can only be used in calibration mode. It restores factory calibration constants from nonvolatile memory.

Command Syntax	CALibrate:INITial
Parameters	None
Examples	CAL:INIT
Related Commands	CAL:STAT CAL:INIT

ManualsPlus.com

CALibrate:SAVe

Channel Specific

This command can only be used in calibration mode. It saves any new calibration constants (after a current or voltage calibration procedure has been completed) in nonvolatile memory.

Command Syntax	CALibrate:SAVE
Parameters	None
Examples	CAL:SAVE
Related Commands	CAL:STAT CAL:INIT

CALibrate:CURRent:POINt

This command can only be used in calibration mode. It is used to set the calibration points of constant current mode. There are four parameters: P1, P2 is used in low current range, P3, P4 is used in high current range. This command can be used to calibrate current source and current meter.

Command Syntax	CALibrate:CURRent:POINt <point>
Parameters	P1 | P2 | P3 | P4
Examples	CAL:CURR:POIN P2
Related Commands	CAL:STAT CAL:SAV

CALibrate:CURRent[:LEVel]

Channel Specific

This command is only used in calibration mode. It enters a calibration current value that you obtain by reading an external meter. You must first select a calibration level (with CALibrate:CURRent: POINt) for the value being entered. These constants are not stored in nonvolatile memory until they are saved with CALibrate:SAVE.

Command Syntax	CALibrate:CURRent[:LEVel] <NRf>
Parameters	<external reading>
Unit	A (amps)
Examples	CAL:CURR 3.2223
Related Commands	CAL:STAT CAL:SAV

ManualsPlus.com

CALibrate:CURRent:METEr:POINt

This command can only be used in calibration mode. It is used to set the calibration points of constant current mode. There are four parameters: P1, P2 is used in low current range, P3, P4 is used in high current range. It can only be used to calibrate current meter selected CONF:CURR.

Command Syntax	CALibrate:CURRent:METEr:POINt <point>
Parameters	P1 | P2 | P3 | P4
Examples	CAL:CURR:METEr:POIN P2

CALibrate:CURRent:METEr[:LEVel]

Channel Specific

This command is only used in calibration mode. It enters a calibration current value that you obtain by reading an external meter. You must first select a calibration level (with CAL:CURR:METE:POIN) for the value being entered. These constants are not stored in nonvolatile memory until they are saved with CALibrate:SAVE.

Command Syntax	CALibrate:CURRent:METEr[:LEVel] <NRf>
Parameters	<external reading>
Unit	A (amps)
Examples	CAL:CURR 3.2223
Related Commands	CAL:STAT CAL:SAV

CALibrate:VOLTage:POINt

This command can only be used in calibration mode. It is used to set the calibration points of constant voltage mode. There are four parameters: P1, P2 is used in low voltage meter range, P3, P4 is used in high voltage meter range. It can be used to calibrate the voltage source and voltage meter.

Command Syntax	CALibrate:VOLTage:POINt <point>
Parameters	P1 | P2 | P3 | P4
Examples	CAL:VOLT:POIN P2
Related Commands	CAL:STAT CAL:SAV

CALibrate:VOLTage[:LEVel]

Channel Specific

This command is only used in calibration mode. It enters a calibration voltage value that you obtain by

ManualsPlus.com

reading an external meter. You must first select a calibration level (with CALibrate:VOLTage:POINt) for the value being entered. These constants are not stored in nonvolatile memory until they are saved with CALibrate:SAVE.

Command Syntax	CALibrate:VOLTage[:LEVel] <NRf>
Parameters	<external reading>
Unit	V (volts)
Examples	CAL:VOLT 3.2223
Related Commands	CAL:STAT CAL:SAV

CALibrate:VOLTage:METEr:POINt

This command can only be used in calibration mode. It is used to set the calibration points of constant voltage mode. There are four parameters: P1, P2 is used in low voltage range, P3, P4 is used in high voltage range. It can only be used to calibrate the voltage meter.

Command Syntax	CALibrate:VOLTage:METEr:POINt <point>
Parameters	P1 | P2 | P3 | P4
Examples	CAL:VOLT:METEr:POIN P2
Related Commands	CAL:STAT CAL:SAV

CALibrate:VOLTage:METEr[:LEVel]

Channel Specific

This command is only used in calibration mode. It enters a calibration voltage value that you obtain by reading an external meter. You must first select a calibration level (with CALibrate:VOLTage:POINt) for the value being entered. These constants are not stored in nonvolatile memory until they are saved with CALibrate:SAVE.

Command Syntax	CALibrate:VOLTage:METEr[:LEVel] <NRf>
Parameters	<external reading>
Unit	V (volts)
Examples	CAL:VOLT:METE 3.2223
Related Commands	CAL:STAT CAL:SAV

ManualsPlus.com

3.4 SCPI Command Tree

TRACe Command Summary

Commands	Description	Default	Channel Specific
:TRACe			
:CLEar	Clear readings from buffer.		Y
:FREE?	Query points available and points in use.		Y
:POINts <n>	Specify size of buffer (2 to 1024).	2	Y
:POINts?	Query buffer size.		Y
:FEED <name>	Select source of readings (VOLTage, CURRent, TWO).	TWO	Y
:CONTrol <name>	Select buffer control mode (NEVer or NEXT).	NEVer	Y
:CONTrol?	Query buffer control mode.		Y
:FEED?	Query source of readings for buffer.		Y
:FILTer			
[:STATe]	Select the type of buffer data	OFF	
[:STATe]?	Query the type of buffer data		
:DELay <n>	Set the trigger delay time	0	
:DELay?	Query the trigger delay time		
:TIMer <n>	Set the timer interval	1	
:TIMer?	Query the timer interval		
:DATA?	Read all data in the buffer.		

CHANnel Command Summary

Commands	Description	Default	Channel Specific
:CHANnel <n>	Select the electronic load channel.	1	
:CHANel:ID?	This query reads the model numbers of the modules installed in the mainframe.		Y

ManualsPlus.com

SOURce Command Summary

Commands	Description	Default	Channel Specific
[:SOURce]			
:INPut			
[:STATe] <b>	Set selected channel's input state.	OFF	Y
[:STATe]?	Query selected channel's input state.		Y
:ALL <b>	Set all channels' input states.		N
:SHORt <b>	Set selected channel's load short state.	OFF	Y
:SHORt?	Query selected channel's load short state.		Y
:SYNCon <b>	Set the ON/OFF state for trace mode.		Y
:SYNCon?	Query the ON/OFF state for trace mode.		Y
:TIMer			
[:STATe]	Set the timer ON/OFF state.		Y
[:STATe]?	Query the timer ON/OFF state.		Y
:DELay	Set the delay time for timer.		Y
:DELay?	Query the delay time for timer.		Y
:REMote			
:SENSe	Set the remote sense ON/OFF state.		Y
:SENSe?	Query the remote sense ON/OFF state.		Y
:FUNCtion <name>	Set electronic load's regulation mode (VOLTage, CURRent, RESistance, POWer, IMPedance).	CURRent	Y
:MODE <name>	Set electronic load's input mode (FIXed or LIST).	FIXed	Y
:MODE?	Query electronic load's input mode.		Y
:FUNCtion?	Query electronic load's regulation mode.		Y
:TRANsient			
[:STATe] <b>	Enable or disable transition mode.	OFF	Y
[:STATe]?	Query electronic load's transition mode.		Y
:CURRent			

ManualsPlus.com

[:LEVel]			
[:IMMediate]<NRf>	Set constant current level.	MIN	Y
[:IMMediate]?	Query constant current level.		Y
:RANGe <NRf>	Set constant current range.	MAX	Y
:RANGe?	Query constant current range.		Y
:SLEW			Y
[:BOTH] <NRf>	Set both positive and negative slew rate for current	MAX	Y
:POSitive <NRf>	Set positive slew rate for current	MAX	Y
:POSitive?	Query positive slew rate for current		Y
:NEGative <NRf>	Set negative slew rate for current		Y
:NEGative?	Query negative slew rate for current		Y
:PROTection			
[:STATe] <b>	Disable or enable current protection	ON	
[:STATe]?	Query current protection state		
:LEVel <NRf>	Set current protection level	MAX	
:LEVel?	Query current protection level		
:DELay <NRf>	Set current protection delay time	3	
:DELay?	Query current protection delay time		
:TRANsient			
:MODE <name>	Set current transiton mode (CONTinuous, PULSe, or TOGGle)	CONTinuous	
:MODE?	Query current transition mode		
:ALEVel <NRf>	Set current transition level A	MAX	
:ALEVel?	Query current transition level A		
:AWIDth <NRf>	Set current transition width A	500uS	
:AWIDth?	Query current transiton width A		
:BLEVel <NRf>	Set current transition level B	MIN	
:BLEVel?	Query current transition level B		
:BWIDth <NRf>	Set current transition width B	500uS	

ManualsPlus.com

:BWIDth?	Query current transiton width B		
:HIGH <NRf>	Set the voltage specification of upper limit		
:HIGH?	Query the voltage specification of upper limit		
:LOW <NRf>	Set the voltage specification of lower limit		
:LOW?	Query the voltage specification of lower limit		
:VOLTage			
[:LEVel]			
[:IMMediate] <NRf>	Set constant voltage level		
[:IMMediate]?	Query constant voltage level		
:ON <Nrf>	Set VON level	MAX	
:ON?	Query VON level		
:RANGe <NRf>	Set constant voltage range	MIN	
:RANGe?	Query constant voltage range		
:AUTO	Set the auto range mode for the voltmeter	MAX	
:AUTO?	Query the auto range mode for the voltmeter		
:LATCh <b>	Enable or disable Von in latch mode	ON	
:LATCh?	Query Von latch mode		
:HIGH <NRf>	Set the current specification of upper limit	ON	
:HIGH?	Query the current specification of upper limit		
:LOW <NRf>	Set the current specification of lower limit		
:LOW?	Query the current specification of lower limit		
:RESistance			
[:LEVel]			
[:IMMediate] <NRf>	Set constant resistance level		
[:IMMediate]?	Query constant resistance level		
:RANGe <NRf>	Set constant resistance range	MAX	
:RANGe?	Query constant resistance range		
:HIGH <NRf>	Set the voltage specification of upper limit	MAX	
:HIGH?	Query the voltage specification of upper limit		

ManualsPlus.com

:LOW <NRf>	Set the voltage specification of lower limit		
:LOW?	Query the voltage specification of lower limit		
:POWer			
[:LEVel]			
[:IMMediate] <NRf>	Set power protection level	MAX	
[:IMMediate]?	Query power protection level		
:RANGe <NRf>	Set power protection delay time	3	
:RANGe?	Query power protection delay time		
:PROTection			
:LEVel <NRf>	Set hardware power protection level		
:LEVel?	Query hardware power protection level		
:DELay <NRf>	Set the delay time after power protection.		
:DELay?	Query the delay time after power protection.		
:CONFig	Set the hard power protection level.		
:CONFig?	Query the hard power protection level.		
:IMPedance			
[:LEVel]			
[:IMMediate] <NRf>	Set constant IMPedance level		
[:IMMediate]?	Query constant IMPedance level		
:RANGe <NRf>	Set constant resistance range		
:RANGe?	Query constant resistance range		
:RESistance	Set constant resistance level		
:RESistance	Query constant resistance level		
:CAPacitance	Set constant capacitance level		
:CAPacitance?	Query constant capacitance level		
:INDuction	Set constant induction level		
:INDuction?	Query constant induction level		
:HIGH <NRf>	Set the voltage specification of upper limit		
:HIGH?	Query the voltage specification of upper limit		

ManualsPlus.com

:LOW <NRf>	Set the voltage specification of lower limit		
:LOW?	Query the voltage specification of lower limit		
:LIST			
:RANGe <NRf>	Set list range		
:RANGe?	Query list range		
:COUNt <n>	Set list cycle (1 to 65534 or INF)		
:COUNt?	Query list cycle		
:STEP <n>	Set list step (2 to 254)		
:STEP?	Query list step		
:LEVel <NRf>	Set list step level		
:LEVel?	Query list step level		
:SLEW			
[:BOTH] <NRf>	Set list step slew rate		
[:BOTH]?	Query list step slew rate		
:WIDth <NRf>	Set list step width		
:WIDth <NRf>	Query list step width		
:SAV <name>	Save list file to specify filename (1 to 5)		
:RCL <name>	Recall list file		
:PROTection:CLEar	Clear protection		

SENSe Command Summary

Commands	Description	Default	Channel Specific
:SENSe			
:AVERage			
:COUNt <n>	Set filter count (1 to 100).	8	Y
:COUNt?	Query filter count.		Y

ManualsPlus.com

MEASure, FETch Command Summary

Commands	Description	Default	Channel Specific
:MEASure			
:VOLTage			
[:DC]?	Measure the DC voltage		Y
:MAX?	Measure the max voltage		Y
:MIN?	Measure the min voltage		Y
:CURRent			
[:DC]?	Measure the DC current		Y
:MAX?	Measure the max current		Y
:MIN?	Measure the min current		Y
:CAPability?	Measure the discharging capability		Y
:FETch			
:VOLTage			
[:DC]?	Fetch the last measured DC voltage		Y
:MAX?	Fetch the last measured max voltage		Y
:MIN?	Fetch the last measured min voltage		Y
:CURRent			
[:DC]?	Fetch the last measured DC current		Y
:MAX?	Fetch the last measured max current		Y
:MIN?	Fetch the last measured min current		Y
:POWer?	Fetch the last measured power		Y
:CAPability?	Fetch the last measured discharging capability		Y

CALibrate Command Summary

Commands	Description	Default	Channel Specific
:CALibrate			
:SECure	Set calibration protection state.	ON	Y

ManualsPlus.com

:SECure?	Query calibration protection state.		Y
:INITital	Resume factory calibration parameter.		Y
:SAVe	Save calibration parameter.		Y
:VOLTage	Subsystem to VOLTage.		Y
:POINt	Set voltage calibration point (P1 to P4).		Y
[:LEVel]	Enters a voltage value from extern meter.		Y
:ON	Calibrate VON level.		
:POINt	Set VON calibration point (P1 to P2).		Y
[:LEVel]	Enters a voltage value from extern meter.		Y
:METEr	Calibrate voltage meter.		
:POINt	Set voltage calibration point (P1 to P4).		Y
[:LEVel]	Enters a voltage value from extern meter.		Y
:CURRent	Subsystem to VOLTage.		
:POINt	Set current calibration point (P1 to P4).		Y
[:LEVel]	Enters a current value from extern meter.		Y
:METEr	Calibrate current meter.		
:POINt	Set current calibration point (P1 to P4).		Y
[:LEVel]	Enters a current value from external meter.		Y
:RESistance	Subsystem to RESistance.		
:POINt	Set resistance calibration point (P1 to P4).		Y
[:LEVel]	Enters voltage and current from external meter.		Y
:AOFFset	Calibrate resistance’s zero current.		
:POINt	Set resistance’s calibration point (P1 to P4).		Y
[:LEVel]	Enters a current value from external meter.		Y
:POWer	Subsystem to POWer.		
:POINt	Set power calibration point (P1 to P2).		Y
[:LEVel]	Enters voltage and current from external meter.		Y

ManualsPlus.com

TRIGger Command Summary

Commands	Description	Default	Channel Specific
:INITiate	Subsystem command path.		
[:IMMediate]	Initiate one trigger cycle.		Y
:CONTinuous <b>	Enable or disable continuous initiation.	on	Y
:CONTinuous?	Query continuous initiation.		Y
:ABORt	Reset trigger system.		N
:TRIGger	Path to program trigger layer.		
[:IMMediate]	Generates a trigger signal.		N
:Signal <b>	Bypass measure control source.	on	Y
:COUNt <n>	Set measure count (1 to 9999).	1	Y
:COUNt?	Query measure count.		Y
:DELay <NRf>	Set delay (0 to 999999.99sec).	0	Y
:DELay?	Query delay.		Y
:SOURce <name>	Select control source (HOLD, TIMer, MANual, BUS, EXTernal).	IMMediate	N
:SOURce?	Query control source.		N
:TIMer <NRf>	Set timer interval (0.01 to 999.99sec).	0.1	N
:TIMer?	Query the programmed timer interval.		N
:SAMPle			
:COUNt <n>	Specify sample count (1 to 1024).	1	Y
:COUNt?			Y

SYSTem Command Summary

Commands	Description	Default	Channel Specific
:SYSTem			
:PRESet	Return to :SYST:PRESet defaults.		N
:POSetup <name>	Select power-on setup: (RST or SAV0).	RST	N
:POSetup?	Query power-on setup.		N
:VERsion?	Query rev level of SCPI standard.		N

ManualsPlus.com

:ERRor?	Query (read) Error Queue.		N
:CLEar	Clears messages from the Error Queue.		N
:LOCal	Take load out of remote and restore operation of front panel controls.		N
:REMote	Place load in remote control.		N
:RWLock	Lockout front panel controls.		N

STATus Command Summary

Commands	Description	Default	Channel Specific
:STATus		(note 1)	
:CHANnel	Path to control channel status registers.		Y
[:EVENt]?	Read the event register.	(note 2)	Y
:ENABle <n>	Program the enable register.	(note 3)	Y
:ENABle?	Read the enable register.		Y
:CONDition?	Read the condition register.		Y
:CSUMary	Path to control channel summary status.		
[:EVENt]?	Read the event register.	(note 2)	N
:ENABle <n>	Program the enable register.	(note 3)	N
:ENABle?	Read the enable register.		N
:OPERation	Path to control operation status register.		
[:EVENt]?	Read the event register.	(note 2)	N
:ENABle <n>	Program the enable register.	(note 3)	N
:ENABle?	Read the enable register.		N
:CONDition?	Read the condition register.		N
:QUEStionable	Path to control questionable status register.		
[:EVENt]?	Read the event register.	(note 2)	N
:ENABle <n>	Program the enable register.	(note 3)	N
:ENABle?	Read the enable register.		N
:CONDition?	Read the condition register.		N
:PRESet	Return status register to default states.		N

ManualsPlus.com

PROGram Command Summary

Commands	Description	Default	Channel Specific
:PROGram			
:ACTive	Subsystem to ACTive		
:CHANnel <n>	Set the active channel for test		N
:CHANnel?	Query the active channel for test		N
:SEQuence <n>	Set the active sequence for test		N
:SEQuence?	Query the active channel for test		N
:SEQuence	Subsystem to SEQuence		
:SHORt <n>, <n>	Set the short channel for the selected seq.		N
:SHORt? <n>	Query the short channel for the selected seq.		N
:ONTime <n>,<NRf>	Set the on time for the selected seq.		N
:ONTime?<n>	Query the on times for the selected seq.		N
:OFFTime <n>,<NRf>	Set the off times for the selected seq.		N
:OFFTime? <n>	Query the off times for the selected seq.		N
:PFDTime <n>,<NRf>	Set the pass/fail delay time		N
:PFDTime? <n>	Query the pass/fail delay time		N
:PAUSe <n>	Set the pause sequence.		N
:PAUSe?	Query the pause sequence.		N
:STOP			
:CONDition <cond>	Set the stop condition for test.		N
:CONDition?	Query the stop condition for test.		N
:CHAin <n>	Set the chain file for this program file.		N
:CHAin?	Query the chain for this program file.		N
:SAVe <n>	Save this program file.		N
:RCL <n>	Recall this program file.		N

Notes:

1. Commands in the STATus subsystem are not affected by *RST and :SYSTem:PRESet. The effects of cycling power, *CLS and :STATus:PRESet are explained by the following notes.
2. Event Registers: Power-up and *CLS clears all bits of the registers. :STATus:PRESet has no effect.
3. Enable Registers: Power-up and :STATus:PRESet clears all bits of the registers. *CLS has no effect.

ManualsPlus.com

Chapter 4

Programming Examples

4.1 Introduction

This chapter contains examples on how to program your electronic load. Simple examples show you how to program:

- Input functions such as voltage, current, and resistance
- Measurement functions
- Status and protection functions
- Transient functions, including lists

NOTE: The examples in this chapter show which commands are used to perform a particular function, but do not show the commands being used in any particular programming environment.

4.2 Programming the Input

Power-on Initialization
When the electronic load is first turned on, it wakes up with the input state set OFF. The following commands are given implicitly at power-on:

- *RST or *RCL 0
- *CLS
- *SRE 0
- *ESE 0

*RST is a convenient way to program all parameters to a known state. Refer to the *RST command in **3.2 Common Commands** to see how each programmable parameter is set by *RST. Refer to the *PSC command in **3.2 Common Commands** for more information on the power-on initialization of the *ESE and the *SRE registers.

ManualsPlus.com

Enabling the Input

To enable the input, use the command:

INPut ON

Input Voltage

The input voltage is controlled with the VOLTage command. For example, to set the input voltage to 25 volts, use:

VOLTage 25

Maximum Voltage

The maximum input voltage that can be programmed can be queried with:

VOLTage? MAXimum

Input Current

All models have a programmable current function. The command to program the current is:

CURRent <n>

where <n> is the input current in amps.

Maximum Current

The maximum input current that can be programmed can be queried with:

CURRent? MAXimum

Overcurrent Protection

The electronic load can also be programmed to turn off its input if the current protection level is reached.

As explained in **3.3 Subsystem Commands**, this protection feature is implemented by the following command:

CURRent:PROTection:STATe ON | OFF

NOTE: Use CURRent:PROTection:DELay to prevent momentary current limit conditions caused by programmed input changes from tripping the overcurrent protection.

ManualsPlus.com

Generating Triggers

You can generate a single trigger by sending the following command over the GPIB:

TRIGger:IMMediate

Note that this command will always generate a trigger. Use the TRIGger:SOURce command to select other trigger sources such as the mainframe's external trigger input.

Programming Transients

Transient operation is used to synchronize input changes with internal or external trigger signals, and simulate loading conditions with precise control of timing, duration, and slew. The following transient modes can be generated:

Continuous	Generates a repetitive pulse stream that toggles between two load levels.
Pulse	Generates a load change that returns to its original state after some time period.
Toggled	Generates a repetitive pulse stream that toggles between two load levels. Similar to Continuous mode except that the transient points are controlled by explicit triggers instead of an internal transient generator.

NOTE: Before turning on transient operation, set the desired mode of operation as well as all of the parameters associated with transient operation. At *RST all transient functions are set to OFF.

Continuous Transients

In continuous operation, a repetitive pulse train switches between two load levels. The rate at which the level changes is determined by the slew rate. In addition, use the following commands to program continuous transients:

```
CURRent:TRANsient:MODE CONTinuous
CURRent:TRANsient:ALEVel 5
CURRent:TRANsient:AWIDth 0.4 mS
CURRent:TRANsient:BLEVel 10
CURRent:TRANsient:BWIDth 0.6 mS
TRANsient ON
TRIGger:IMMediate
```

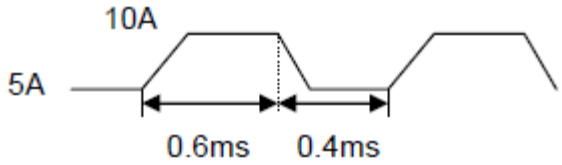

This example assumes that the CC mode is active and the slew rate is at the default setting (maximum rate). The electronic load module starts conduction at the main level (in this case 5 amps). When transient operation is turned on, the module’s input current will slew to and remain at 10 amps for 60% of the period (600 us). The input current will then slew to and remain at 5 amps for the remaining 40% (400 us) of that cycle.

ManualsPlus.com

Pulse Transients

Pulsed transient operation generates a load change that returns to level B state after some time period. It is similar to continuous operation with the following exceptions:

a. To get a pulse, an explicit trigger is required. To specify the trigger source, use TRIGger:SOURce.
b. One pulse results from each trigger. Therefore, frequency cannot be programmed. Use the following commands to program pulsed transients:

```
CURRent:TRANsient:MODE PULSe
CURRent:TRANsient:ALEVel 5
CURRent:TRANsient:BLEVel 10
CURRent:TRANsient:BWIDth 10 mS
TRANsient ON
TRIGger:IMMediate
```

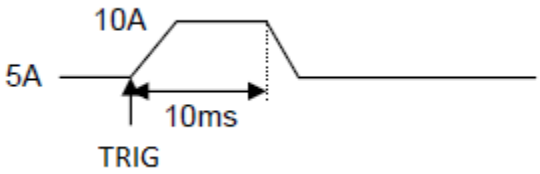

This example assumes that the CC mode is active, the slew rate is at the factory default setting (maximum rate), and a trigger signal is connected to the mainframe's external trigger input. The electronic load module starts conduction at the transient level A setting (5 amps). When the transient mode is turned on and an external trigger signal is received (or TRIGger:IMMediate is received), the input level starts increasing at a rate determined by the slew rate. When the value specified by the transient level setting (5 amps) is reached, it stays there for the remainder of the time determined by the pulse width setting (10 ms). After this time has elapsed, the input level decreases to the main level again at the rate specified by the slew setting and remains there until another trigger is received. Any triggers that occur during the time the transient level is in effect will re-trigger the pulse, extending the pulse by another pulse-width value.

Toggled Transients

Toggled transient operation causes the module input to alternate between two pre-defined levels as in continuous operation except that the transient transitions are controlled by explicit triggers instead of the internal transient generator. Use the following commands to program toggled transients:

```
TRIGger:SOURce EXTernal
CURRent:TRANsient:MODE TOGGle
CURRent:TRANsient:ALEVel 5
CURRent:TRANsition:BLEVel 10
TRANsient ON
```

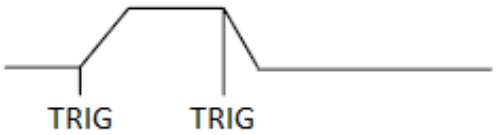

This example assumes that CC mode is active, the slew rate is at the factory default setting (maximum rate) and a trigger signal is connected to the mainframe's external trigger input. Toggled transient operation is similar to that described for continuous and pulse operation, except that each time a trigger is received the input alternates between the level A and level B current levels.

ManualsPlus.com

4.3 Programming Lists

List mode lets you generate complex sequences of input changes with rapid, precise timing, which may be synchronized with internal or external signals. This is useful when running test sequences with a minimum amount of programming overhead. You can program up to 84 steps in the list, the time interval that each setting is maintained, the number of times that the list will be executed, and how the settings change in response to triggers. All list data can be stored in nonvolatile memory using the LIST:SAV command. This means that the programmed data for any list will be retained when the electronic load is turned off. Use the LIST:RCL command to recall the saved state.

4-Step Current Change List Example

The following example procedure shows how to generate and save a simple 4-step list of current changes. When programming, be sure to verify all parameters are within the module's specifications.

1. Set the list regulation mode to current.
   LIST:MODE CURRent
2. Set the range of the list.
   LIST:RANGe 40
3. Set the list cycle.
   LIST:COUNt 10000
4. Specify the number of steps in the list.
   LIST:STEP 4
5. Specify the current setting for step 1.
   LIST:LEVel 1,5
6. Set the current slew rate for step 1.
   LIST:SLEW 1,1
7. Set the width for step 1.
   LIST:WIDth 1,10ms
8. Specify the current setting for step 2.
   LIST:LEVel 2,10
9. Set the current slew rate for step 2.
   LIST:SLEW 2,1
10. Set the width for step 2.
    LIST:WIDth 2,10ms
11. Specify the current setting for step 3.
    LIST:LEVel 3,20
12. Set the current slew rate for step 3.
    LIST:SLEW 3,1
13. Set the width for step 3.
    LIST:WIDth 3,10ms
14. Specify the current setting for step 4.
    LIST:LEVel 4,15
15. Set the current slew rate for step 4.
    LIST:SLEW 4,1
16. Set the width for step 4.
    LIST:WIDth 4,10ms
17. Save the list to memory location 2.
    LIST:SAV 2
18. Set the input regulation mode to be controlled by values in a list.
    FUNCtion:MODE LIST
19. Set trigger source to BUS
    TRIG:SOUR BUS
20. Run the list file
    *TRG

ManualsPlus.com

Chapter 5

Error Messages

Error Number List

This appendix gives the error numbers and descriptions that are returned by the electronic load. Error numbers are returned in two ways:

1) Error numbers are displayed on the front panel.
2) Error numbers and messages are read back with the SYSTem:ERRor? query. SYSTem:ERRor? returns the error number into a variable and returns two parameters, an NR1 and a string.

The following table lists the errors that are associated with SCPI syntax errors and interface problems. It also lists the device dependent errors. Information inside the brackets is not part of the standard error message, but is included for clarification. When errors occur, the Standard Event Status register records them in bit 2, 3, 4, or 5:

Table 1 - Error Numbers

Error	Error String [Description/Explanation/Examples]
Command Errors 100 through 199 (sets Standard Event Status Register bit #5 CME)	
101	DESIGN ERROR: Too many numeric suffices in Command Spec
110	No Input Command to parse
114	Numeric suffix is invalid value
116	Invalid value in numeric or channel list, e.g. out of range
117	Invalid number of dimensions in a channel list
120	Parameter of type Numeric Value overflowed its storage
130	Wrong units for parameter
140	Wrong type of parameter(s)
150	Wrong number of parameters
160	Unmatched quotation mark (single/double) in parameters
165	Unmatched bracket
170	Command keywords were not recognized

ManualsPlus.com

180	No entry in list to retrieve (number list or channel list)
190	Too many dimensions in entry to be returned in parameters
191	Too many char
Execution Errors –200 through –299 (sets Standard Event Status Register bit #4 EXE)	
-200	Execution error [generic]
-221	Settings conflict [check current device state]
-222	Data out of range [e.g., too large for this device]
-223	Too much data [out of memory; block, string, or expression too long]
-224	Illegal parameter value [device-specific]
-225	Out of memory
-270	Macro error
-272	Macro execution error
-273	Illegal macro label
-276	Macro recursion error
-277	Macro redefinition not allowed
System Errors –300 through –399 (sets Standard Event Status Register bit #3 DDE)	
-310	System error [generic]
-350	Too many errors [errors beyond 9 lost due to queue overflow]
Query Errors -400 through -499 (sets Standard Event Status Register bit #2)	
-400	Query error [generic]
-410	Query INTERRUPTED [query followed by DAB or GET before response complete]
-420	Query UNTERMINATED [addressed to talk, incomplete programming message received]
-430	Query DEADLOCKED [too many queries in command string]
-440	Query UNTERMINATED [after indefinite response]
Self-test Errors 0 through 99 (sets Standard Event Status Register bit #3)	
0	No error
1	Module Initialization Lost
2	Mainframe Initialization Lost
3	Module Calibration Lost

ManualsPlus.com

4	Non-volatile RAM STATE section checksum failed
5	Non-volatile RAM RST section checksum failed
10	RAM selftest
11	CVDAC selftest 1
12	CVDAC selftest 2
13	CCDAC selftest 1
14	CCDAC selftest 2
15	CRDAC selftest 1
16	CRDAC selftest 2
20	Input Down
40	Flash write failed
41	Flash erase failed
80	Digital I/O selftest error
Device-Dependent Errors 100 through 32767 (sets Standard Event Status Register bit #3)	
213	RS-232 buffer overrun error
216	RS-232 receiver framing error
217	RS-232 receiver parity error
218	RS-232 receiver overrun error
220	Front panel UART overrun
221	Front panel UART framing
222	Front panel UART parity
223	Front panel buffer overrun
224	Front panel timeout
225	Front CRC check error
226	Front cmd Error
401	CAL switch prevents calibration
402	CAL password is incorrect
403	CAL not enabled
404	Computed readback cal constants are incorrect

ManualsPlus.com

405	Computed programming cal constants are incorrect
406	Incorrect sequence of calibration commands
407	CV or CC status is incorrect for this command
603	FETCH of data that was not acquired
604	Measurement overrange

ManualsPlus.com

22820 Savi Ranch Parkway
Yorba Linda, CA 92887
www.bkprecision.com

© 2013 B&K Precision Corp.

Printed in China v030713