ManualsPlus.com

BK PRECISION®

MDL Series
Programmable DC Electronic Load

Models: MDL001, MDL002, MDL200, MDL252, MDL305, MDL400, MDL505, MDL600

USER MANUAL

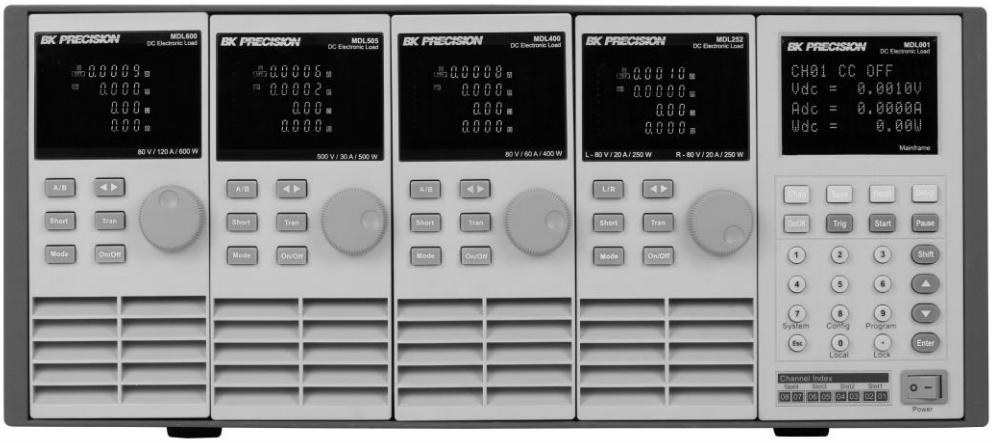

ManualsPlus.com

Safety Summary

The following general safety precautions must be observed during all phases of operation of this instrument. Failure to comply with these precautions or with specific warnings elsewhere in this manual violates safety standards of design, manufacture, and intended use of the instrument. We assume no liability for the Customer's failure to comply with these requirements.

ENVIRONMENTAL CONDITIONS

This instrument is intended for indoor use, pollution degree 2 environments. It is designed to operate at a maximum relative humidity of 95% and at altitudes of up to 2000 meters. Refer to the specifications tables for the AC mains voltage requirements and ambient operating temperature range.

BEFORE APPLYING POWER

Verify that all safety precautions are taken. Note the instrument's external markings described under "Safety Symbols".

GROUND THE INSTRUMENT

This product is a Safety Class 1 instrument (provided with a protective earth terminal). To minimize shock hazard, the instrument chassis and cover must be connected to an electrical ground. The instrument must be connected to the AC mains power through a grounded power cable, with the ground wire firmly connected to an electrical ground (safety ground) at the power outlet. Note: Any interruption of the protective (grounding) conductor or disconnection of the protective earth terminal will cause a potential shock hazard that could result in personal injury.

DO NOT OPERATE IN AN EXPLOSIVE ATMOSPHERE

Do not operate the instrument in the presence of fumes or flammable gases.

KEEP AWAY FROM LIVE CIRCUITS

Operating personnel must not remove instrument covers except as instructed in this guide for installing or removing electronic load modules. Component replacement and internal adjustments must be made only by qualified service personnel. Do not replace components with power cable connected. Under certain conditions dangerous voltages may exist even with the power cable removed. To avoid injuries, always disconnect power, discharge circuits, and remove external voltage sources before touching components.

ManualsPlus.com

DO NOT SERVICE OR ADJUST ALONE
Do not try to do some internal service or adjustment unless another person capable of rendering first aid resuscitation is present.

Safety Symbols

⎓	Direct current
∼	Alternating current
≂	Both direct and alternating current
⏚	Protective earth (ground) terminal
⚠	Attention (refer to accompanying documents)

WARNING

The WARNING sign denotes a hazard. It calls attention to a procedure, practice, or the like, which, if not correctly performed or adhered to, could result in personal injury. Do not proceed beyond a WARNING sign until the indicated conditions are fully understood and met.

CAUTION

The CAUTION sign denotes a hazard. It calls attention to an operating procedure, or the like, which, if not correctly performed or adhered to, could result in damage to or destruction of part or all of the product. Do not proceed beyond a CAUTION sign until the indicated conditions are fully understood and met.

ManualsPlus.com

Compliance Statements

Disposal of Old Electrical & Electronic Equipment (Applicable in the European Union and other European countries with separate collection systems)

This product is subject to Directive 2002/96/EC of the European Parliament and the Council of the European Union on waste electrical and electronic equipment (WEEE), and in jurisdictions adopting that Directive, is marked as being put on the market after August 13, 2005, and should not be disposed of as unsorted municipal waste. Please utilize your local WEEE collection facilities in the disposition of this product and otherwise observe all applicable requirements.

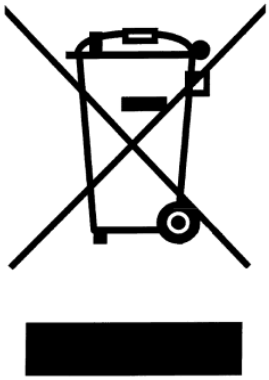

CE Declaration of Conformity

The DC electronic load meets the requirements of Low Voltage Directive 73/23/EEC and Electromagnetic Compatibility Directive 89/336/EEC amended by 93/68/EEC.

Low Voltage Directive

- EN61010-1: 2001

EMC Directive

- EN50081-1
- EN50082-1

ManualsPlus.com

Table of Contents

Safety Summary 2

Compliance Statements 4

Product Overview 8

- Description 8
- Features 9
- Front Panel 10
- Rear Panel 11
- Protection Functions 12
  - Overvoltage Protection (OVP) 12
  - Overcurrent Protection (OCP) 12
  - Overpower Protection (OPP) 14
  - Overtemperature Protection (OTP) 15
  - Reverse Voltage Protection (LRV/RRV) 15
- Menu List 16
  - Setup Menu 16
  - Configuration Menu 19
  - Automatic Test Menu 20

Installation 21

- Inspection 21
- Cleaning 21
- Installing Modules 22
- Channel Number 24
- Location 25
- Input Voltage Selection 27
- Turn-On Checkout 28
- If the Electronic Load Does Not Turn On 29

Load Connection 30

- Remote Sense Connection 31
- Parallel Connection 32
- Mainframe 8-pin Control Connector 33
- External Trigger Connections 34

ManualsPlus.com

External ON/OFF Control Connection 35
Mainframe Extension Connections 35
PC Control Connection 36

Operation 37

Operating Modes 37

Constant Current (CC) mode 37
Constant Voltage (CV) Mode 39
Constant Resistance (CR) Mode 40
Constant Power (CW) Mode 41
Constant Impedance (CZ) Mode 41
Setting CV, CC, CR, CW, CZ Mode 43

Local Operation 44

Mainframe 44
Module 47
Module Panel Lock 48
Switching Channels 48
Channel Synchronization 48
VFD Indicator Function Description 49

Transient Operation 50

Continuous 50
Pulse 51
Toggle 52
Setting Up A/B Transient Operation 52

List Operation 55

Setting Up List Operation Mode 55

Triggered Operation 59

Trigger Function 59
Trigger Source 59

Short Operation 59
Input On/Off Operation 60
Von Operation 60

ManualsPlus.com

Setting Up Von Function 61

Save and Recall Operation 62
Module Controlling Link 63

Voltage Failure Indication 64
Current Monitoring 64
Digital I/O 64
Remote Sense Function 65
External Analog Control 65

Automatic Test 65

Setting Up Test Files 65
Recall Test Files 70

Remote Operation 70

USB Interface 71
Ethernet Interface 71
GPIB Interface 71
RS-232 Interface 72

RS-232 Data Format 72
Baud Rate 72
Parity 72
RS-232 Flow Control 73
RS-232 Connections 73
RS-232 Troubleshooting 74

Communication Setting 74

Specifications 75

Supplementary Characteristics 77

SERVICE INFORMATION 78
LIMITED THREE-YEAR WARRANTY 79

ManualsPlus.com

Product Overview

This section describes the main features and menus of the MDL Series DC Electronic Load. The MDL Series is comprised of two parts, mainframes and modules. The mainframes mentioned are the MDL001 mainframe and the MDL002 mainframe extension. Modules in this series include the MDL200, MDL252, MDL305, MDL400, MDL505, and MDL600. Unless otherwise noted, this document will refer to all of these instruments as “electronic load”. The range of each module’s specific voltage, current, and power is listed in the Specifications section.

Description

The MDL Series is a multi-channel programmable DC electronic load system. With programming and remote control capabilities, the MDL Series DC electronic load can provide multiple solutions according to the requirements of your design and is suitable for testing a wide range of power sources from multi-output DC power supplies to batteries, fuel cells, and photovoltaic arrays.

Up to four modules can be installed into the MDL001 mainframe to support up to a total of 8 channels. Adding the MDL002 mainframe extension will enable the system to support four additional module slots for a maximum of 16 channels. The electronic load is configured by installing user-selectable modules into the mainframe and operated using the front panel keypad and rotary knob. It can also be controlled remotely via USB, RS-232C, LAN, or GPIB interface. The electronic load modules all have similar functions, but may differ in range of input voltage, current, and power. The high resolution voltage and current measurement system provides both accuracy and convenience.

The electronic load can be used in one of five different operation modes: constant voltage (CV), constant current (CC), constant resistance (CR), constant power (CW), or constant impedance (CZ). All panel operation and programming functions are carried out on the MDL001 mainframe panel. A wide range of dynamic loading applications can be simulated through user-programmable slew rates, load levels, duration, and conducting voltage.

ManualsPlus.com

Features

- CC/CV/CR/CW/CZ operating modes
- Removable modules for easy system flexibility
- Bright VFD display for both mainframe and modules
- Power range up to 2400 W (4800 W with mainframe extension)
- Supports up to 16 channels with mainframe extension
- Operate identical modules in parallel mode for high current applications
- Synchronous load on/off function
- 16-bit voltage and current metering providing high resolution of 0.1 mV and 0.01 mA
- Transient mode up to 25 kHz
- List mode (sequence mode) – minimum 20 us step width with 84 user programmable steps
- Adjustable slew rate in CC mode
- Automatic test function
- 101 memory areas to save/recall setting parameters
- Analog current control and monitoring
- Remote sensing
- Standard LAN, GPIB, USBTMC compliant USB, and RS-232 interfaces with SCPI protocol support
- OVP/OCP/OPP/OTP and reverse voltage protection

ManualsPlus.com

Front Panel

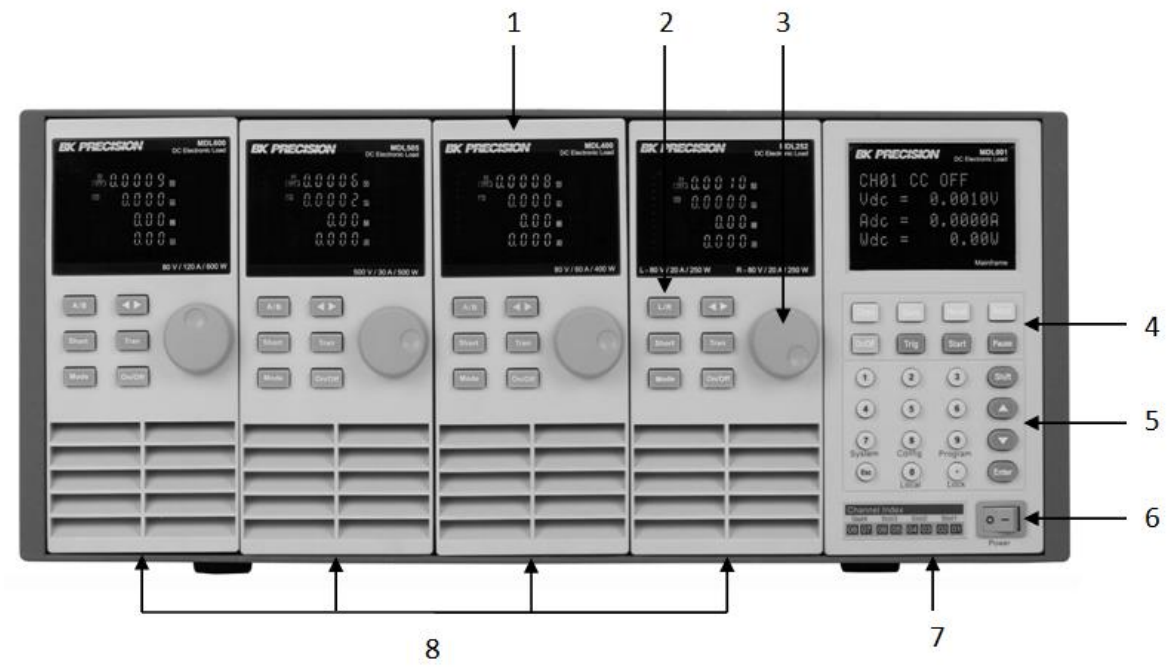

Figure 1 - MDL Series Front Panel

1) VFD DISPLAY
   Displays electronic load information.
2) MODULE PANEL KEYS
   Controls module functions. Refer to Module section for more details on the use of these keys.
3) ADJUSTMENT KNOB
   Used to change parameters.
4) MAINFRAME FUNCTION KEYS
   Controls each channel's operating status. Refer to Mainframe section for more details on the use of these keys.
5) MAINFRAME NUMERIC ENTRY AND SHIFT KEYS
   Refer to Mainframe section for more details on the use of these keys.
6) POWER SWITCH
   Turns the system on or off.
7) MAINFRAME
8) MODULES

ManualsPlus.com

Rear Panel

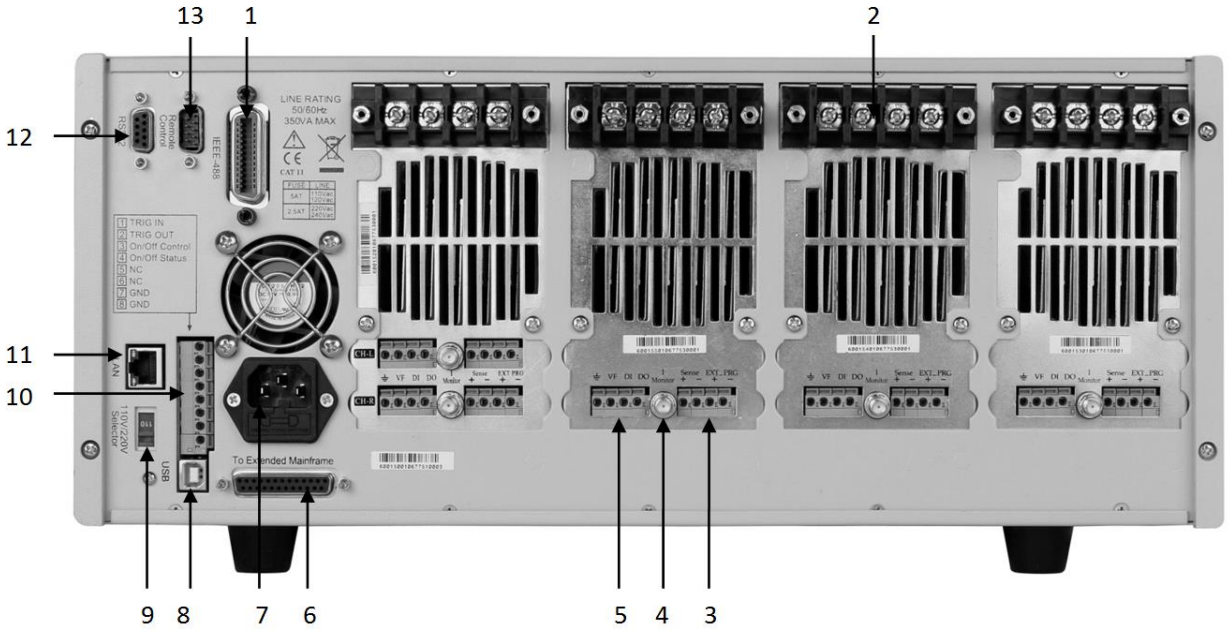

Figure 2 - MDL Series Rear Panel

1) GPIB interface
2) Input terminal of module
3) Remote measurement and external input control terminal
4) Current monitoring output
5) Digital I/O and VF output terminal
6) Extended module interface
7) AC Power input socket
8) USB interface
9) Line voltage selection switch (110V/220V)
10) Trigger I/O and load on/off terminals
11) LAN interface
12) RS-232 interface
13) Not used – for factory use only

ManualsPlus.com

Protection Functions

The electronic load has the following protection functions: Overvoltage protection (OVP), overcurrent protection (OCP), overpower protection (OPP), overtemperature protection (OTP), and local and remote reverse voltage protection (LRV/RRV).

The mainframe will act appropriately once any of the above protections are active. You can press any button on the front panel to restore the protection function. For example, if the electronic load triggers the overtemperature protection, the buzzer will alarm, the input will automatically turn off, and the mainframe VFD will display OTP.

Overvoltage Protection (OVP)

If the OVP circuit has triggered, input will turn off, buzzer alarm will go off, and the status register's OV and VF bit will be set. The mainframe will display OVP and the condition will remain until they are reset. Once overvoltage protection occurs, the 8-pin connector's VF pin on the rear panel will output TTL high voltage level. You can control the output state of the power supply under test via this pin (see Figure 31).

Operations to Clear the OVP State

Check whether the input voltage is within the electronic load's rated voltage or the programmed protection voltage ranges. If it is outside the range, please disconnect the device under test. Then press any key on the front panel or remotely send SCPI command PROTection:CLEar. The OVP displayed on the front panel will turn off and the electronic load exits OVP protection state.

Overcurrent Protection (OCP)

The electronic load includes both hardware and software overcurrent protection features.

Hardware OCP - The electronic load's maximum input current will be limited to approximately 110% of the current range. Once the hardware OCP is triggered, the status register's OC bit will be set. When the hardware OCP is removed, the status register's OC bit will be reset. Hardware overcurrent protection will not affect the electronic load's on/off state.

Software OCP - Users can set the electronic load's software OCP value with the following steps.

ManualsPlus.com

Panel Operations	VFD Display
1. Power on the electronic load.	Self-test
2. Press Shift + ⑧ to enter Configuration menu.	Sync On Set Von Meter Protect List Ext. Ctrl Set About Exit
3. Press ▼ key to select <Protect> and press Enter to go into protection menu.	Max Power Set Alimit State Alimit Point Alimit Delay Plimit Point Plimit Delay OnTimer State OnTimer Set Exit
4. Press ▼ key to select <Alimit State> and press Enter. Select <On> and press Enter to confirm.	On Off (Default)
5. Press ▼ key to select <Alimit Point> and press Enter. Input OCP current value and press Enter to confirm.	Current Limit Set= 40.000A
6. Press ▼ key to select <Alimit Delay> and press Enter. Input delay time before alarm and press Enter to confirm.	Current Limit Delay= 3S
7. Press Esc key to exit menus.	

If the electronic load's current value is above the set overcurrent protection value, the electronic load will automatically turn off and the VFD will display OCP. At the same time, the OC and PS bits in the status register will be set and remain until they are reset.

Operations to Clear the OCP State

Check whether the input current is within the electronic load's rated current or the programmed protection current ranges. If it is outside the range, disconnect the device under test. Then press any key on the front panel or remotely send SCPI command PROTection:CLEar. The OCP displayed on the front panel will turn off and the load exits OCP protection state.

ManualsPlus.com

Overpower Protection (OPP)

The electronic load includes both hardware and software OPP features.

Hardware OPP – In the event that the electronic load's input power exceeds the set power protection limit, the hardware OPP will limit the power. Once the hardware OPP is triggered, the status register's OP bit will be set. When the hardware OPP is removed, the status register's OP bit will be reset. Hardware overpower protection will not turn the electronic load's input off.

Software OPP - Users can set the electronic load's software OPP value with the following steps.

Panel Operations	VFD Display
1. Power on the electronic load.	Self-test
2. Press Shift + ⑧ to enter Configuration menu.	Sync On Set Von Meter Protect List Ext. Ctrl Set About Exit
3. Press ▼ key to select <Protect> and press Enter to go into protection menu.	Max Power Set Alimit State Alimit Point Alimit Delay Plimit Point Plimit Delay OnTimer State OnTimer Set Exit
4. Press ▼ key to select <Plimit Point> and press Enter. Input OPP power value and press Enter to confirm.	Power Limit Set= 210.00W
5. Press ▼ key to select <Plimit Delay> and press Enter. Input delay time before alarm and press Enter to confirm.	Power Limit Delay= 3S
6. Press Esc key to exit menus.	

If the electronic load's power value is above the set overpower protection value, the electronic load will automatically turn off and the VFD will display OPP. At the same time, the OP and PS bits in the status register will be set and remain until they are reset.

ManualsPlus.com

Operations to Clear the OPP State

Check whether the input power is within the rated power range or the programmed protection ranges. If it is outside the range, disconnect the device under test. Then press any key on the front panel or remotely send command PROTection:CLEar. The OPP displayed on the front panel will turn off and the electronic load exits OPP protection state.

Overtemperature Protection (OTP)

Each module has an overtemperature protection circuit, which will turn off the input if the internal temperature exceeds safe limits. When the electronic load's internal circuit temperature is over 85°C, the load will enable OTP. Input will automatically be turned off and the VFD will display OTP. At the same time the OT and PS bits in the status register will be set and remain until they are reset.

Operations to Clear the OTP State

When the electronic load temperature has dropped below the protection point, press any key on the front panel or remotely send command PROTection:CLEar. The OTP displayed on the front panel will turn off and the electronic load exits OTP protection state.

Reverse Voltage Protection (LRV/RRV)

This function protects the electronic load in case the input DC voltage lines are connected with the wrong polarity. When a reverse voltage (LRV – local reverse voltage, RRV – remote reverse voltage) connection condition is detected, the input will immediately turn off, the buzzer will alarm the user, and the status register's reverse voltage (LRV/RRV) and VF bits will be set. The mainframe will display LRV/RRV until they are reset.

In this condition, the 8-pin connector's VF pin will output a high level. You can disconnect the power supply via this signal (see Figure 31).

Operations to Clear the Reverse Voltage State

Check whether the connection is reversed. If so, disconnect the device to be measured and the reverse voltage state will be cleared.

ManualsPlus.com

Menu List

The following menus can be viewed on the VFD display. Use ▲▼ keys to scroll through the menu list and press Enter key to enter the selected menu function. Use ▲▼ keys to scroll through the VFD screen and press Enter key to enter its submenu. Press Esc to go back to the previous menu selection. Pressing number keys can directly select a channel.

Setup Menu

Press Setup key to enter the setup menu.

SETUP		
MODE	Select working mode	
	CONST CURRENT	Load works in CC mode
	CONST VOLTAGE	Load works in CV mode
	CONST RESISTANCE	Load works in CR mode
	CONST POWER	Load works in CW mode
	CONST IMPEDANCE	Load works in CZ mode
CC/CV RANGE	Switch the range	
	HIGH RANGE	Set high range
	LOW RANGE	Set low range
I / V / R / W SET	Set the working current/voltage/resistance/power value	
Vmax/Amax	Set up the maximum voltage value/maximum current value	
Vmin/Amin	Set up the minimum voltage value/minimum current value	
∫=2.500A/us	Set the rising slew rate (only in CC mode)	
∫=2.500A/us	Set the falling slew rate (only in CC mode)	
TRAN A=0.00A	Set up level A value	
Ta=0.0005S	Set up level A width	
TRAN B=0.00A	Set up level B value	
Tb=0.0005S	Set up level B width	
T MODE	Set up the transient mode	
	CONTINUOUS	Continuous mode
	PULSE	Pulse mode
	TOGGLE	Toggle mode
RLC R=7500.0Ω	Set up the resistance value	
RLC L=0uH	Set up the inductance value	
RLC C=10uF	Set up the capacitance value	
EXIT	Exit the setup menu	

ManualsPlus.com

System Menu

Press Shift + ⑦ key to enter the System menu.

MENU			
INITIALIZE			
	INITIALIZE DEFAULT SET	Resume all configuration to default settings	
POWER ON SET			
	RST (DEFAULT)	Set the load's input state to default at power on	
	SAV0	Set the load's input state to SAV0 at power on	
BUZZER SET	Set up the buzzer state		
	ON	Enable the function	
	OFF (DEFAULT)	Disable the function	
LOAD ON KNOB	Module knob mode setting		
	UPDATE (DEF)	Real-time update	
	OLD	No update (when turning load ON/OFF, original value before use of rotary knob will be set)	
TRIGGER SOUR.	Set up the trigger mode		
	MANUAL (DEF)	Manual trigger	
	EXTERNAL	External signal trigger mode	
	HOLD	Hold trigger mode	
	BUS	Bus trigger mode	
	TIMER	Timer trigger	
TRIGGER TIMER	Trigger timer setting		
	TRIGGER TIMER SET	Set the time of the trigger timer	
COMMUNICATION	Select the interface for remote communication		
	RS232 (DEF)		
	USBTMC-USB488		
	GPIB		
	ETHERNET		
RS232 SET			
	BAUDRATE SET	Set up the communication baud rate	
		4800 (DEFAULT)	
		9600	
		19200	
		38400	
		57600	
		115200	

ManualsPlus.com

RS232 SET			
	PARITY SET	Set up the communication parity	
		NONE (DEFAULT)	
		ODD	
		EVEN	
	HANDSHAKE SET	Select the handshake protocol	
		NONE (DEFAULT)	
		CTS/RTS	
		XON/XOFF	
GPIB ADDRESS	GPIB address setting		
	GPIB ADDRESS SET	Set up communication address	
ETHERNET SET	Ethernet settings		
	GATEWAY SET	Gateway setting	
	IP SET	IP setting	
	MASK SET	Mask setting	
	PORT SET	Port setting	
	EXIT		
EXPAND MODULE	Module expansion		
	ON	Enable the function	
	OFF (DEFAULT)	Disable the function	
LANGUAGE SET	Communication protocol		
	SCPI (DEFAULT)	SCPI protocol	
	EXTEND TABLE	Expand SCPI protocol, compatible with others	
ABOUT	Mainframe production information		
	MDL###	Mainframe production model number	
	SN: ##################	Mainframe production serial number	
	VER: 1.43	Mainframe software version	
EXIT			

ManualsPlus.com

Configuration Menu

Press Shift + ⑧ key to enter the channel Configuration menu.

MENU			
SYNC ON SET	Setup Synchronization ON / OFF function		
	ON (DEFAULT)	Turn on synchronization function	
	OFF	Turn off synchronization function	
VON			
	VON POINT	Set the load's Von point	
	VON LATCH	Von latch state	
		ON (DEFAULT)	Turn on Von latch
		OFF	Turn off Von latch
	EXIT	Exit the menu	
AVERAGE COUNT	Average count setting 2^X (adjustable from 2^2 to 2^16)		
V AUTORANGE	Auto switching voltage range		
	ON (DEFAULT)	Enable this function	
	OFF	Disable this function	
PROTECT	Load protecting function		
	MAX POWER SET	Set up hardware power protection state	
	ALIMIT STATE	Set up software current protection state	
		ON	Turn on software current protection state
		OFF (DEFAULT)	Turn off software current protection state
	ALIMIT POINT	Set up software current protection value	
	ALIMIT DELAY	Set up software current protection delay	
	PLIMIT POINT	Set up software power protection value	
	PLIMIT DELAY	Set up software power protection delay	
	ON TIMER STATE	Set up LOAD ON timer state	
	ON TIMER SET	Set up LOAD ON timer time	
	EXIT	Exit the menu	
LIST			
	FUNCTION MODE	Select mode	
		FIXED	Choose fixed operation mode
		LIST	Choose list operation mode
	RECALL LIST	Recall list operation file	

ManualsPlus.com

	EDIT LIST	Edit list operation file	
		HIGH RANGE	Edit high range of list operation
		LOW RANGE	Edit low range of list operation
EXT. CTRL SET	External analog control function		
	ON	Turn on external analog control function	
	OFF (DEFAULT)	Turn off external analog control function	
REM SENSE SET	Remote sense function		
	ON	Enable remote sense function	
	OFF (DEFAULT)	Disable remote sense function	
ABOUT	Module production information		
	MDL###	Channel production model	
	SN: ##################	Channel production serial number	
	VER: 1.35	Channel software version	
EXIT	Exit the menu		

Automatic Test Menu

Press Shift + ⑨ key to enter the program menu.

PROGRAM	
RUN PROGRAM	Run the testing file
RECALL PROG	Recall the testing file
EDIT PROGRAM	Edit the testing file
EXIT	

ManualsPlus.com

Installation

Inspection

This instrument was carefully inspected before shipment. Upon receipt, inspect the instrument for damage that might have occurred during transit. If any sign of damage is found, please notify your B&K Precision distributor.

The following standard and optional accessories are provided with each mainframe or module.
Mainframes include:

- Power cord
- User manual
- Mainframe extension cable accessory (MDL002 only)

Modules include:

- Certificate of calibration and test report

Optional accessories:
Rack mount kit IT-E153A (available for mainframes MDL001 and MDL002)

Cleaning

Use a dry cloth or one slightly dampened with water to clean the external case parts. Do not attempt to clean internally.

WARNING : To prevent electric shock, please unplug the power cord connected to the unit before cleaning.

ManualsPlus.com

Installing Modules

CAUTION : Static electricity may damage load modules. Please install modules according to standard electrostatic prevention. Avoid touching joints and circuit boards.

One can install any combination of modules up to 2400 W total in the MDL001 mainframe in any order. This also applies to the MDL002 mainframe extension, allowing a maximum of 4800 W total when connecting the MDL001 and MDL002 together. The procedure of installing modules to the mainframe extension is the same as that of the MDL001 mainframe.

Installation Procedure

1. Turn the mainframe off and disconnect the power cord.
2. Loosen screws on front panel plastic cover and remove from mainframe.

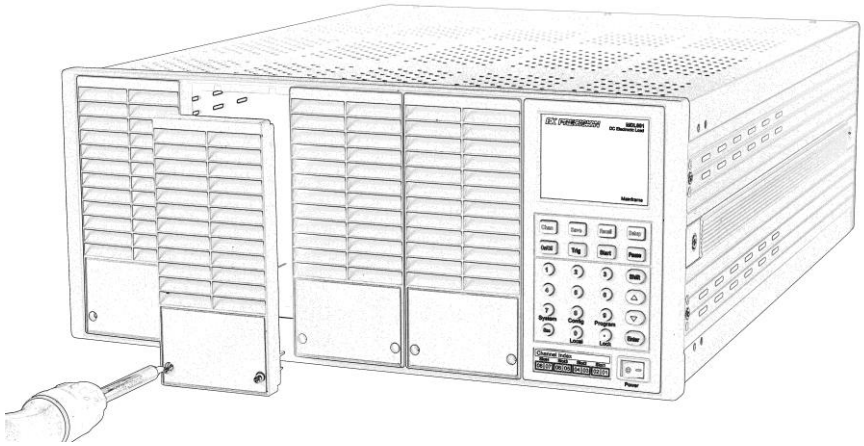

Figure 3a - Module Installation

3. Remove plastic cover on rear with flat-blade screwdriver.

ManualsPlus.com

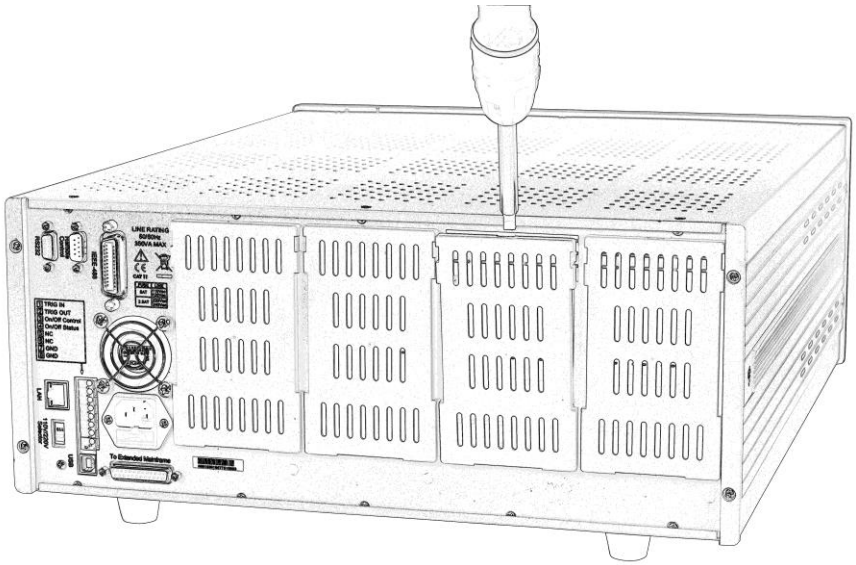

Figure 3b - Module Installation

4. Insert and slide the selected modules into the slot.

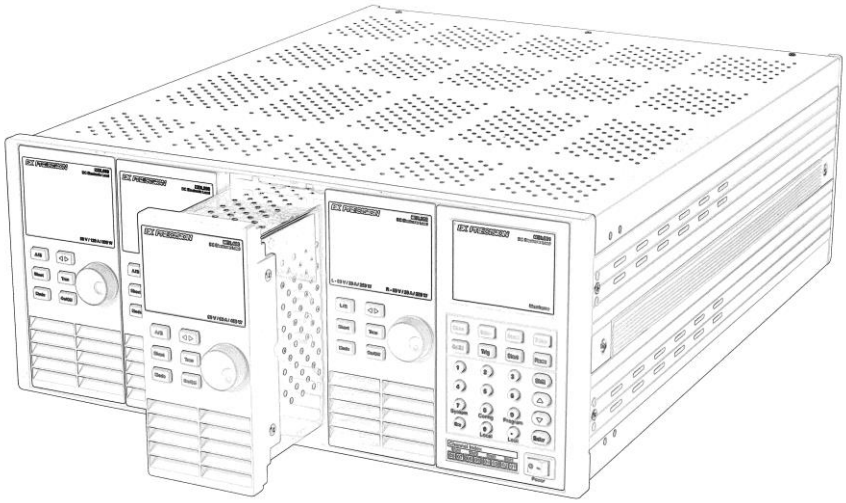

Figure 3c - Module Installation

5. Insert and tighten module screws on rear panel.

ManualsPlus.com

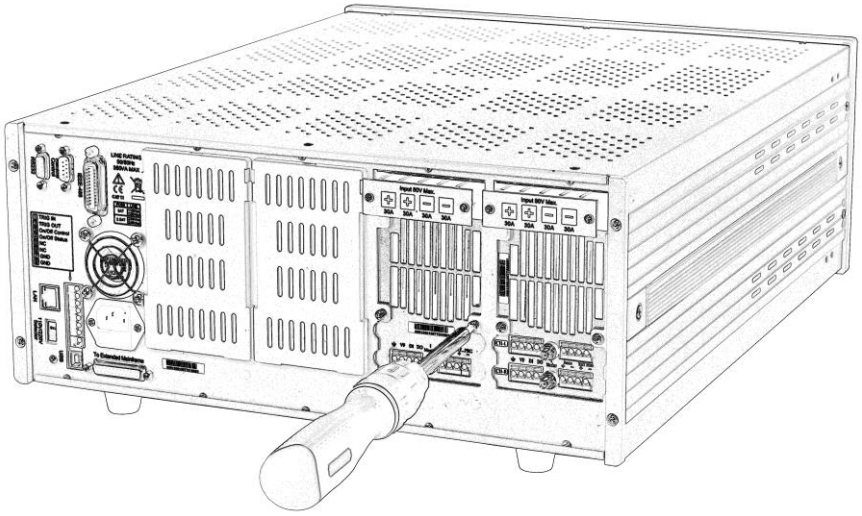

Figure 3d - Module Installation

6. Install more modules in other slots following the same process (steps 2 through 5).
7. Reconnect the power cord.

Channel Number

The channel number for all modules is determined by the location of the modules in relation to the mainframe and ordered from right to left. With the MDL001 mainframe, the total number of channels is 8. Channels 1 and 2 are next to the mainframe front panel, while channels 7 and 8 are located on the left side. Load channel number is fixed even if the location is unoccupied. Dual-channel modules such as the MDL252 have two channels. If it is a single-channel module, the channel number is automatically assigned the first number of the slot. Figure 4 shows the default channel number order.

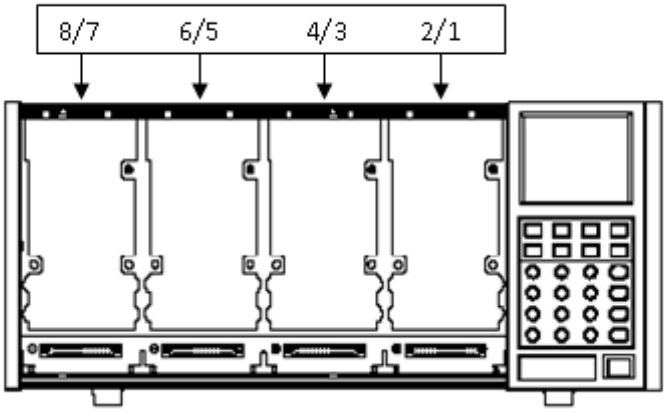

Figure 4 - Channel Number Distribution

ManualsPlus.com

The following figures show examples of how channels are assigned when single-channel and dual-channel modules are installed.

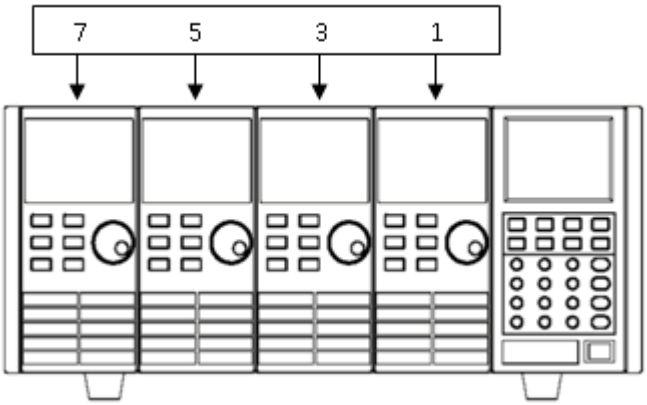

Figure 5 - Channel Number Order When Installing Four Single-Channel Modules

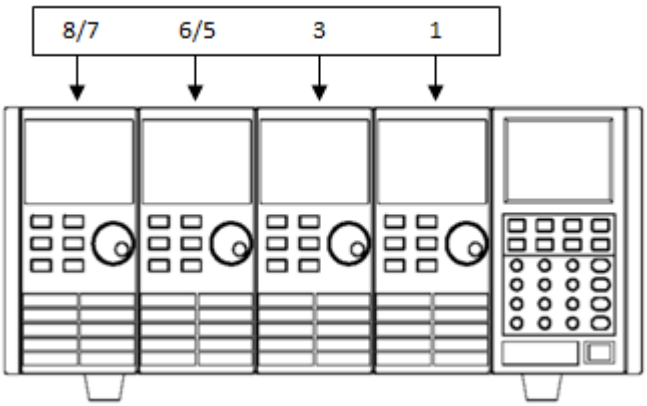

Figure 6 – Channel Number Order When Installing Two Single-Channel Modules and Two Dual-Channel Modules

---

Note : Mainframe extension module channels are numbered 11-18.

Location

The operating temperature of the MDL Series DC Electronic Load is 0 to 40 ℃. A fan cools the electronic load by drawing air through both the top and front, and then exhausting it out the back. Therefore, the electronic load must be installed in a location that allows sufficient space on the front and back of the unit for adequate air circulation. Minimum clearances for bench operation are 2 inches from the top and 3 inches from the front and back. If there are radiator fans in your

ManualsPlus.com

cabinet, please avoid installing the load near the fan, since it may limit air circulation of the load. If you are installing equipment on top of your electronic load in the cabinet, use a filler panel above the unit to ensure adequate air circulation.

The MDL Series can be placed in a standard 19-inch rackmount shelf. Rack mount kit IT-E153A is available for use with mainframe (MDL001) and mainframe extension (MDL002). When mounted, there is no need to remove the bottom studs.

CAUTION : Do not block the fan exhaust at the rear of the load. When the load is used on a bench, make sure there is enough space on the front and rear of the equipment for air circulation.

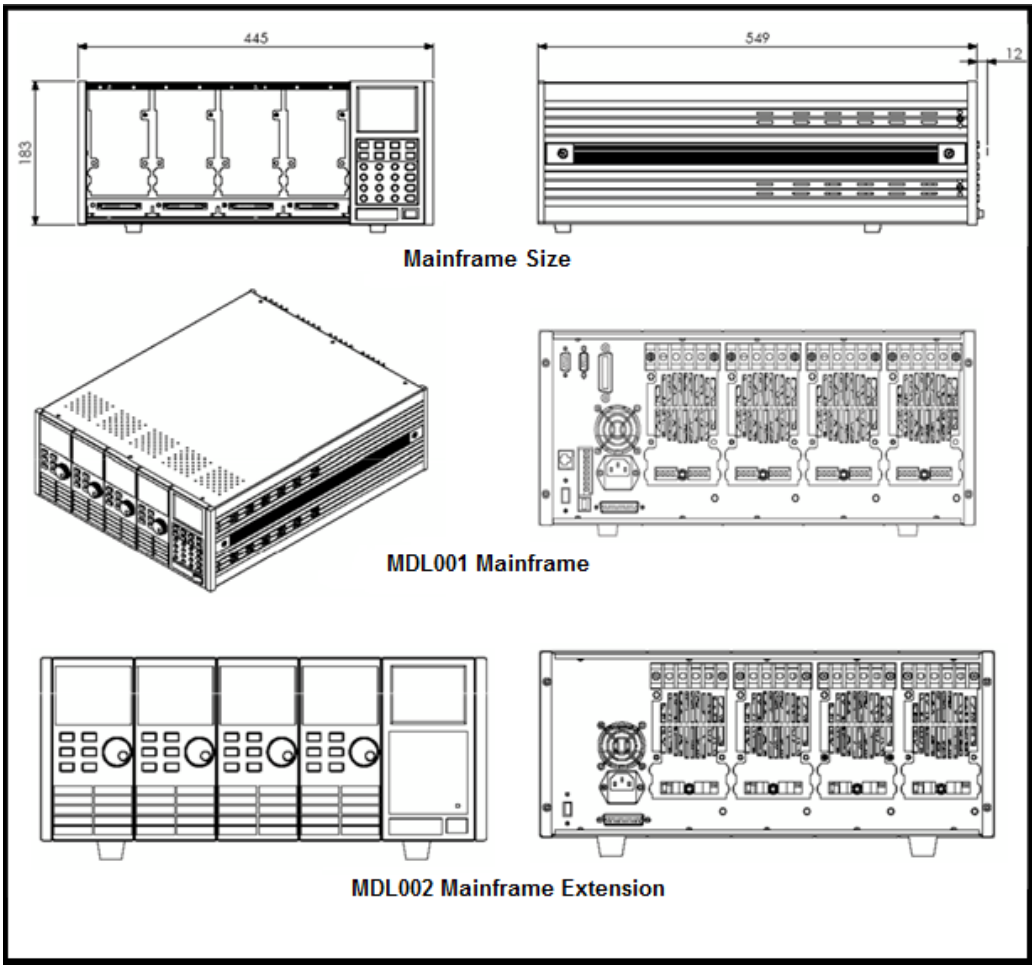

Figure 7 - MDL001 and MDL002 Outline Diagram

The MDL002 mainframe extension has the same dimensions as the MDL001 mainframe.

ManualsPlus.com

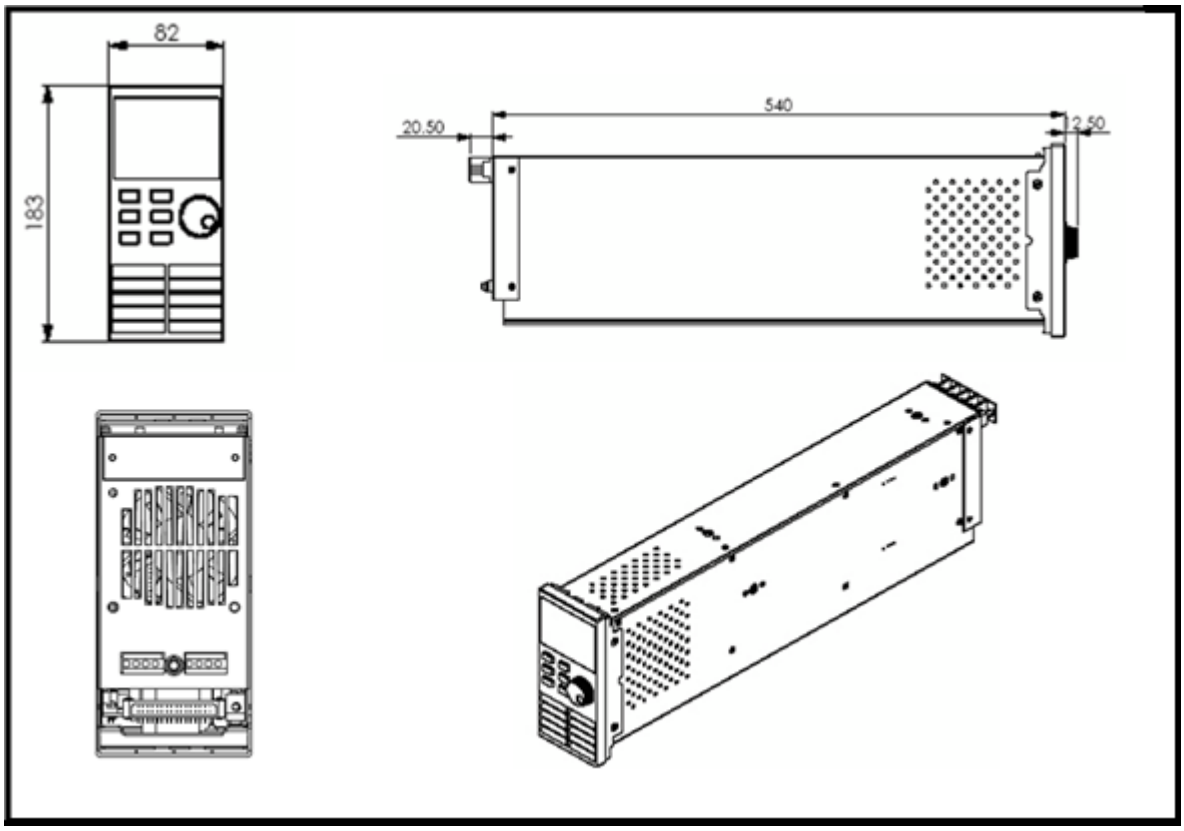

Figure 8 - Module Outline Diagram

Note : Dimensions are in millimeters (mm).

Input Voltage Selection

The electronic load can work under 110/220V±10% AC input, identified by an input line voltage switch on the rear (refer to Figure 9). If the indicated line voltage does not match your region, please use the switch in the back of the unit to choose your input line voltage, install appropriate fuse (refer to Table 1 - Fuse Table below), and then insert power cord.

CAUTION : Check to make sure correct fuse is installed when line voltage is switched.

ManualsPlus.com

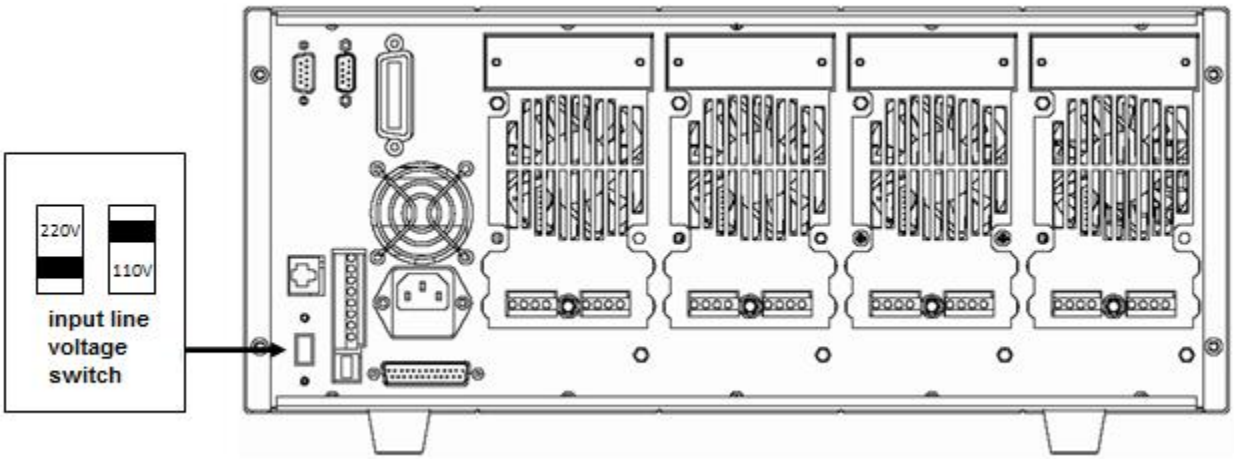

Figure 9 – Input Voltage Selection

Turn-On Checkout

When you turn on the electronic load, the front-panel display will light up briefly while the electronic load performs its power-on self-test. The following table shows the procedure of the self-test.

Mainframe VFD Display	Description
BOIS Ver 1.20	VFD displays software version
SYSTEM SELF TEST	System self-check
CH1/2/3/4/5/6/7/8 SCAN… □7□5□3□1	Detecting all installed modules
e.g.：CH01 CV OFF Vdc=0.0000V Adc=0.0000A Wdc= 0.00W	Displays information of channel 1 or the leftmost channel. Use up and down key to select other channels.

WARNING: Your electronic load is equipped with a 3-wire grounding type power cord; the third conductor being ground. The electronic load is grounded only when the power-line cord is plugged into an appropriate receptacle. Do not operate your power supply without adequate cabinet ground connection.

ManualsPlus.com

If the Electronic Load Does Not Turn On

Use the following troubleshooting steps to help solve problems you might encounter when turning on the instrument:

1) **Verify that there is AC power to the electronic load.**
   First, verify that the power cord is firmly plugged into the power receptacle on the rear panel of the electronic load. You should also make sure the power source you plugged the electronic load into is energized. Then check to see that the electronic load is turned on.

2) **Verify the power line voltage setting.**
   The line voltage is set to the proper value for your country (110VAC or 220VAC) when the electronic load is shipped from factory. Change the line voltage setting if it is not correct.

3) **Verify that the correct power line fuse is installed.**
   If fuse is blown, please replace it according to the following specification.

Table 1 - Fuse Table

Product	Fuse specification (110VAC)	Fuse specification (220VAC)
MDL001	T5A, 250V	T2.5A, 250V
MDL002	T5A, 250V	T2.5A, 250V

4) **Replace fuse.**
   Use a flat-bladed screwdriver to open the small plastic cover under the AC input connector on the rear panel of the load and then replace with matching fuse.

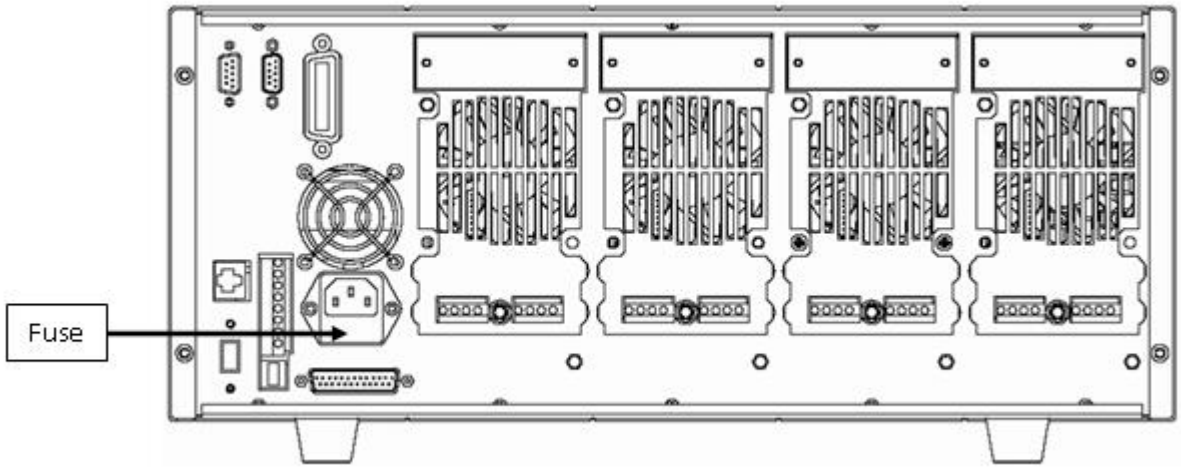

Figure 10 - Fuse Location

ManualsPlus.com

Load Connection

WARNING : To satisfy safety requirements, load wires between the electronic load and the device under test (DUT) should have a current rating high enough not to overheat while carrying the short-circuit output current. Never make connections between the electronic load and a DUT while the electronic load inputs are turned ON and/or the DUT has live power at its output.

Before connecting the device to be measured to the electronic load, please remove the cover on the output terminals of the load and cover it after completing the connection. Please pay attention to the type, length, and polarity when wiring. Avoid using wires of minimum specification of heating, which are unable to supply good load regulation. Generally speaking, if the wires are short enough, they can control a voltage drop of less than 0.5 V. In addition, bonding them together can reduce induction and noise. Connect wire from positive terminal of module to positive terminal of device. Similarly, connect the corresponding negative terminal. Figure 11 illustrates a typical connection of the module with the device to be measured.

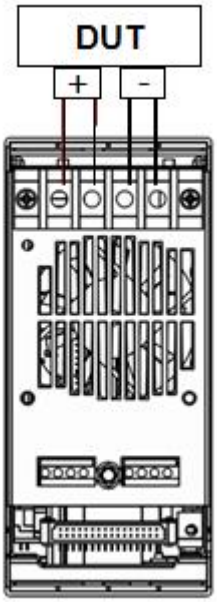

Figure 11 - Connection of Load and Device Under Test (DUT)

ManualsPlus.com

There are two positive terminals and two negative terminals on the rear panel of every module. Single terminal connection is adequate when the input current is less than 30 A.

WARNING : Each terminal can carry up to 30 A current. Double-terminal connection is needed when the input current is more than 30 A. Refer to Figure 11 - Connection of Load and Device Under Test (DUT) **for double-terminal connection.**

Remote Sense Connection

If the lead length is relatively long, there will be a voltage drop in the leads connected between load and measured object. Remote sensing can compensate for this condition and provide better accuracy in your measurement. Figure 12 illustrates a typical connection between module and device for remote sense operation.

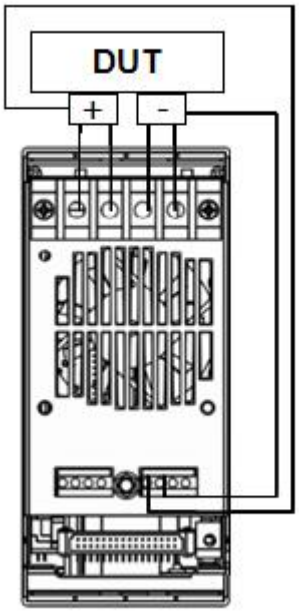

Figure 12 - Remote Sense Connection

ManualsPlus.com

There are two input connectors. One is the electronic load's input measurement terminal and the other is the Vsense measurement terminal. When Vsense is connected to device to be measured, the electronic load will switch to Vsense mode automatically. There is no need to change a setting in the menu and the front panel of the module will show "sense".

CAUTION : The electric potential on the positive terminal of Vsense connector must be higher than the negative terminal.

Parallel Connection

Parallel connection can be applied between modules of the same model to increase current and power dissipation, but it cannot be applied between different modules. Modules can be paralleled in CC, CR, or CW mode, but cannot be paralleled in CV or CZ mode. Each module will dissipate the power it has been programmed at. For example, after being paralleled, two single-channel modules rated at 80V/40A/300W can dissipate up to 80V/80A/600W. Figure 13 illustrates the paralleled connection for increased power dissipation.

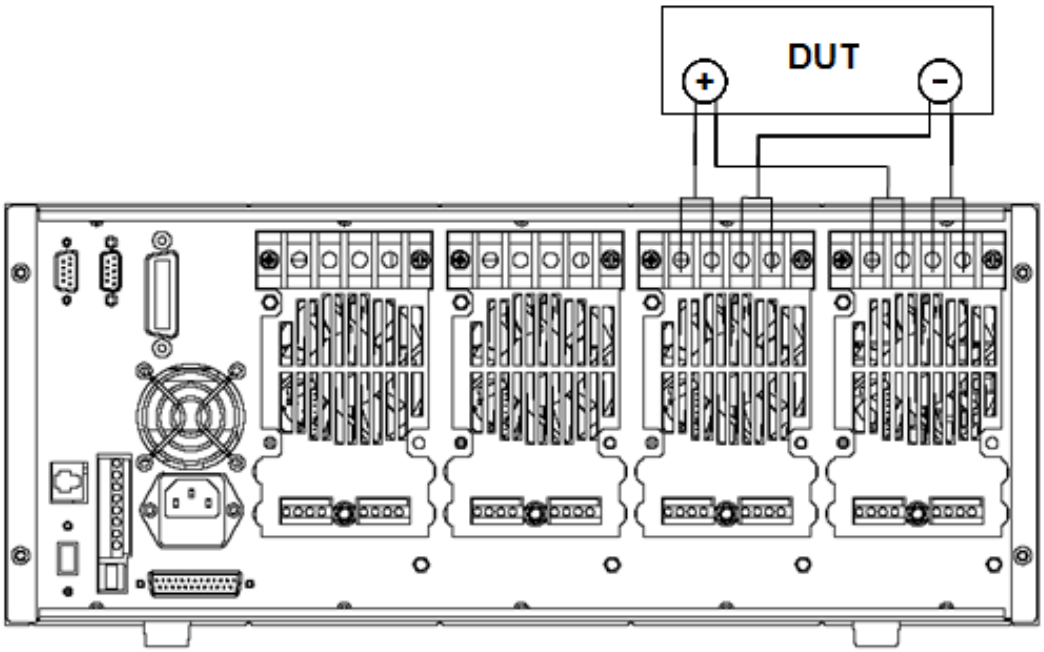

Figure 13 - Parallel Module Connection

ManualsPlus.com

Mainframe 8-pin Control Connector

The mainframe's 8-pin control terminal on the rear panel is shown below. This is used for external trigger and ON/OFF control connections.

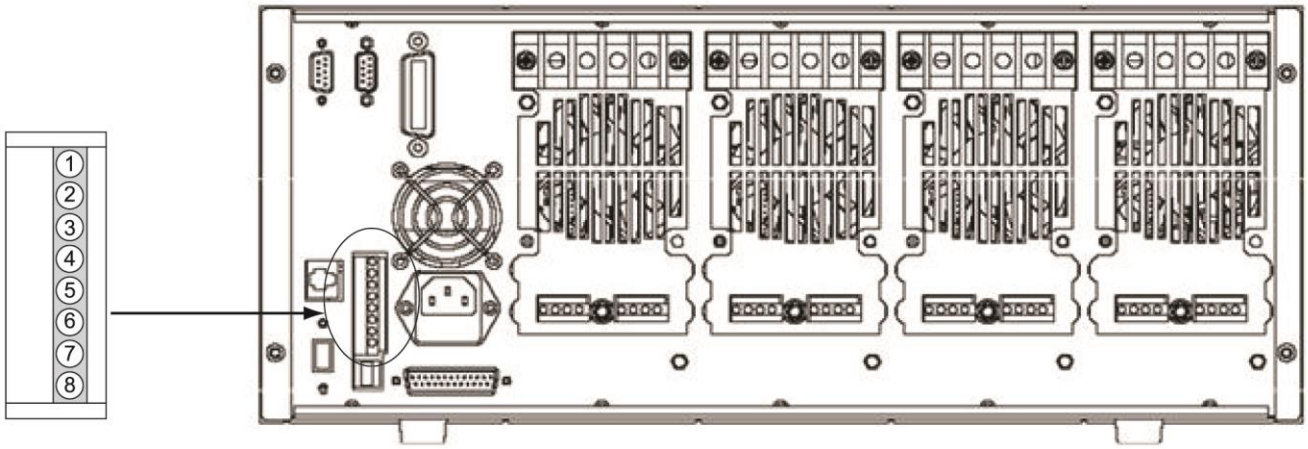

Figure 14 – Mainframe Rear Panel 8-pin Control Connector

Table 2 - Control Connector Pinout

Pin	Signal	Description
1	Trigger IN	Trigger Signal Input
2	Trigger OUT	Trigger Signal Output
3	ON/OFF IN	Synchronization ON/OFF Control Signal Input
4	ON/OFF OUT	Synchronization ON/OFF Signal Output
5	NC	No Connection
6	NC	No Connection
7	GND	Ground
8	GND	Ground

ManualsPlus.com

External Trigger Connections

There are five kinds of trigger modes:

1) Front panel TRIG trigger mode
2) Rear panel trigger mode
3) BUS trigger mode
4) Timer trigger mode
5) Hold trigger mode

Setting these modes is done through the System menu (Shift + ⑦) under <Trigger Source>. Press Enter to confirm setting and Esc to exit menu.

Trigger Modes

1) To use front panel trigger mode, first set the trigger source as MANUAL. Press Trig to start panel trigger mode.

2) To use rear panel trigger mode, first set the trigger source as EXTERNAL. Inputting a TTL level pulse (>10 us) to the trigger signal input (pin 1) of mainframe's Mainframe 8-pin Control Connector on the rear panel will enable a trigger operation. The following figure shows one way to produce a trigger signal.

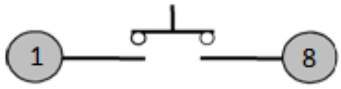

When making contact with a TTL pulse source, it produces a trigger to change the setting value (voltage, current, resistance, etc.), e.g. switch in transient mode, or create a pulse in dynamic pulse mode. At the same time, it will output a trigger signal on pin 2.

3) To use BUS trigger mode, first set the trigger source as BUS. Connect the electronic load by GPIB, USB, or Ethernet communication interface. When the TRIG command is received, the load will produce a trigger signal.

4) To use timer trigger mode, first set the trigger source as TIMER. Set the TRIGGER TIMER's time, and the electronic load will trigger at specified trigger timer setting and also produce a trigger signal on rear Trigger Out pin.

5) To use hold trigger mode, first set trigger source as HOLD. Then send the TRIG:IMM command to trigger the electronic load. Pin 2 of 8-pin Control Connector on the rear will also output a corresponding trigger signal when the electronic load receives the TRIG:IMM command.

ManualsPlus.com

External ON/OFF Control Connection

ON/OFF IN (pin 3 of rear 8-pin Control Connector) is used to toggle the multi-channel electronic load inputs ON or OFF. When ON/OFF IN pin receives a TTL level pulse (>10us), the ON/OFF state of the load will toggle. SYNC ON SET function can be set to ON for multiple channels to toggle more than one channel at a time.

ON/OFF OUT (pin 4 of rear 8-pin Control Connector) indicates ON/OFF state of the multi-channel electronic load. If SYNC ON SET function of any specific channel is set to ON and the channel's input state is ON, pin 4 outputs a low TTL level signal. If the input state is off, pin 4 outputs a high TTL level signal.

Mainframe Extension Connection

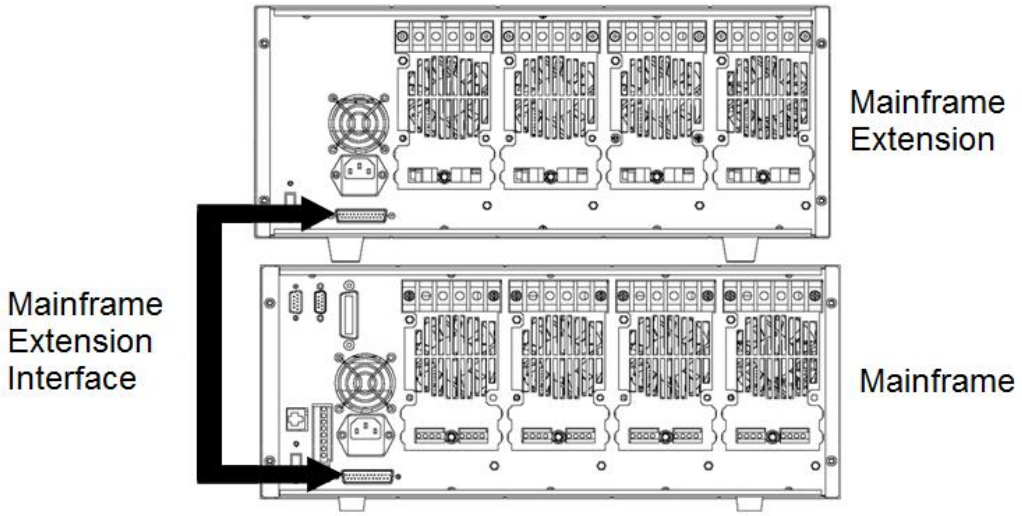

Figure 15 – Mainframe Extension Connection

This interface is used to connect the mainframe extension to expand the number of channels. Up to 16 total channels can be supported when mainframe is connected to the mainframe extension.

Procedure:

1. Use expansion cable to connect the mainframe extension interface between the mainframe and mainframe extension.
2. Press Shift + ⑦ to enter System menu. Use ▲▼ keys to navigate through menu.
3. Select <Expand module> and choose ON to enable expand function.
4. Press Enter to confirm.

ManualsPlus.com

PC Control Connection

The MDL Series DC Electronic Load can achieve remote control via USB, RS-232, LAN, or GPIB interface, but only one interface can be used at a time. Choose the interface via the System menu (Shift + ⑦). Connect communication cable before powering on. **Do not hot plug**, as it may damage the communication interface of the electronic load. The following procedure shows how to connect the RS-232 cable between the electronic load and PC.

Procedure:

1. Connect RS-232 cable.
2. Power on the electronic load.
3. Select channel number via ▲▼ keys.
4. Enter System menu by pressing Shift + ⑦. Use ▲▼ keys to navigate through menus.
5. Select <Communication> and select <RS-232>. Press Enter to confirm.
6. Now the display will return to main menu. Select <RS-232 Set> and press Enter. In this menu, you can set the values for baud rate, parity, and handshake using ▲▼ keys and Enter key.

See **Menu List** for full listing of menus and submenus applicable to all other remote interfaces.

ManualsPlus.com

Operation

Operating Modes

The electronic load can work in the following modes:

1) Constant current (CC) operation mode
2) Constant voltage (CV) operation mode
3) Constant resistance (CR) operation mode
4) Constant power (CW) operation mode
5) Constant impedance (CZ) operation mode

Constant Current (CC) mode

In this mode, the electronic load will sink a current in accordance with the programmed value regardless of the input voltage.

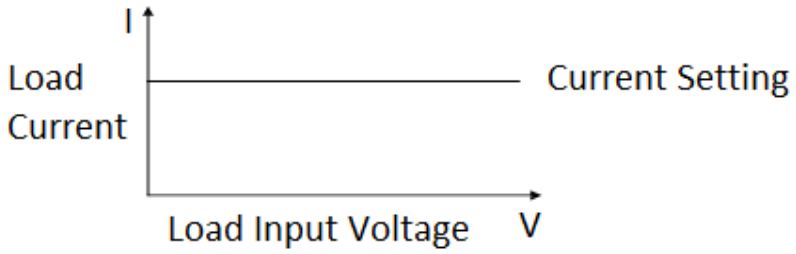

Figure 16 - Constant Current Mode

Ranges

When working in CC mode, you can press the Setup key to enter the RANGE menu. Two overlapping ranges can be selected: LOW RANGE or HIGH RANGE. Current can be edited in either of the two ranges. Low range will supply higher accuracy and better resolution when you set lower current. If any value you set is outside the maximum value of the LOW RANGE, you should select HIGH RANGE. If the electronic load is in remote control mode, you can use the CURR:RANG command to switch current range.

ManualsPlus.com

Immediate Current Value

Set the current level via front panel or by sending SCPI command CURR <n>. If the load is in CC mode, the new current level setting immediately changes the input at a rate determined by the slew rate. If the load is not in CC mode, the current level setting will be saved for use until mode is switched to CC mode.

Transient Current Level

A/B transient current level can be set on the front panel or by remote operation. The load can continuously toggle between the two levels when transient operation is turned on.

Set Slew Rate

The current slew rate determines the rate at which the input current to a module changes to a new programmed value. You can set the current level's rise/fall slew rate on the front panel or by remote operation. The programmed slew rate is immediately in effect to the triggered and transient current level changes.

Slew Rate Measurement and Actual Transition time

Current slew rate is defined as the change in current over time. A programmable slew rate allows a controlled transition from one load setting to another. The actual transition time is defined as the time for the input to change from 10% to 90%, or 90% to 10% of the programmed current values. The graph below illustrates slew rate measurements.

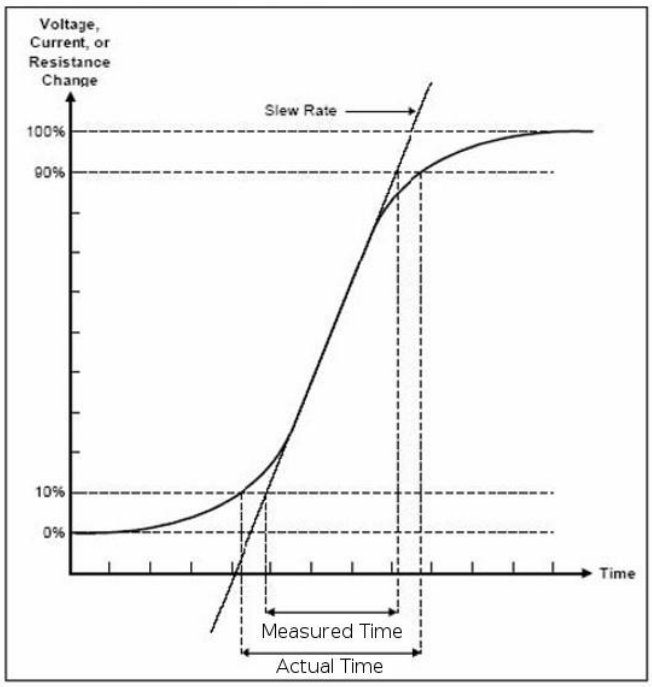

Figure 17 - Slew Rate Measurement

ManualsPlus.com

Between the 10% and 90% region, the slew rate can be measured by observing the steepest slope portion. In case of very large load changes, e.g. from no load to full load, the actual transition time will be larger than the expected (measured) time. For this reason, the firmware allows the user to program slew rate values outside of the specified slew rate ranges. The minimum transition time for all programmable slew rates is also limited in cases where the transition from one setting to another is very small, due to bandwidth limitations of the load.

Constant Voltage (CV) Mode

In this mode, the electronic load will attempt to sink enough current to control the source voltage to the programmed value.

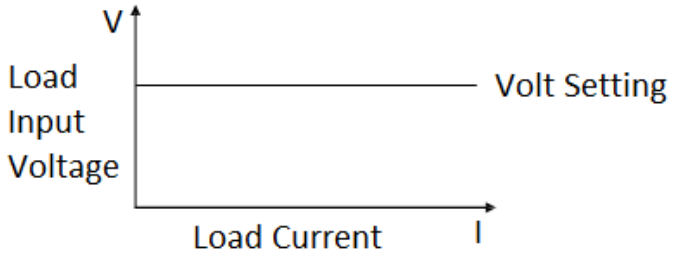

Figure 18 - Constant Voltage Mode

Ranges

When working in CV mode, you can press the Setup key to enter the RANGE menu. Two overlapping ranges can be selected: LOW RANGE or HIGH RANGE. Voltage can be edited in either of the two ranges. Low range will supply higher accuracy and better resolution when you set lower current. If any value you set is outside the maximum value of the LOW RANGE, you should select HIGH RANGE. If the electronic load is in remote control mode, you can use the VOLT:RANG command to switch voltage range.

Voltage Level

Set the voltage level on front panel or by sending SCPI command VOLT <n>. If the load is in CV mode, the new setting immediately changes the input. If the electronic load is not in CV mode, the set voltage level will be saved in the instrument for use until the mode is switched to CV mode.

ManualsPlus.com

Transient Voltage Level

A/B transient voltage level can be set on front panel or by remote operation. The electronic load can continuously toggle between the two levels when transient operation is turned on.

Constant Resistance (CR) Mode

In this mode, the electronic load is equivalent to a constant resistance, as shown below. The electronic load will linearly change the current, according to the input voltage.

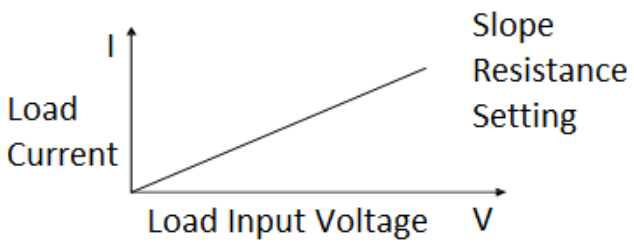

Figure 19 - Constant Resistance Mode

Ranges

When working in CR mode, you can press the Setup key to enter the RANGE menu. Two overlapping ranges can be selected: LOW RANGE or HIGH RANGE. Resistance can be edited in either of the two ranges. Low range will supply higher accuracy and better resolution when you set lower resistance. If any value you set is outside the maximum value of the LOW RANGE, you should select HIGH RANGE. If the electronic load is in remote control mode, you can use the RES:RANG command to switch resistance range.

Immediate Resistance Level

Set the resistance level via front panel or by sending SCPI command RES <n>. If the load is in CR mode, the new resistance level setting immediately changes the input. If the load is not in CR mode, the resistance level setting will be saved for use until mode is switched to CR mode.

Transient Resistance Level

A/B transient resistance level can be set on front panel or by remote operation. The load can continuously toggle between the two levels when transient operation is turned on.

ManualsPlus.com

Constant Power (CW) Mode

In this mode, the electronic load will consume a constant power. When input voltage increases, the input current will decrease, while power (P = V*I) will remain the same.

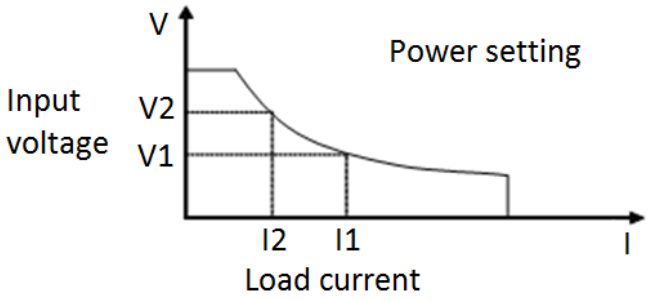

Figure 20 - Constant Power Mode

Ranges

When working in CW mode, you can press the Setup key to enter the RANGE menu. Two overlapping ranges can be selected: LOW RANGE or HIGH RANGE. Power can be edited in either of the two ranges. Low range will supply higher accuracy and better resolution when you set lower power. If any value you set is outside the maximum value of the LOW RANGE, you should select HIGH RANGE. If the electronic load is in remote control mode, you can use the POW:RANG command to switch power range.

Immediate power level

Set the power level via the front panel. If the load is in CW mode, the new power level setting immediately changes the input. If the load is not in CW mode, the power level setting will be saved for use until mode is switched to CW mode.

Transient power level

A/B transient power level can be set via the front panel or by remote operation. The electronic load can continuously toggle between the two levels when transient operation is turned on.

Constant Impedance (CZ) Mode

In this mode, the electronic load uses an A/D converter to sample and a built-in DSP calculation to simulate the transient current wave of the tested components.

Circuit principle is as follows:

ManualsPlus.com

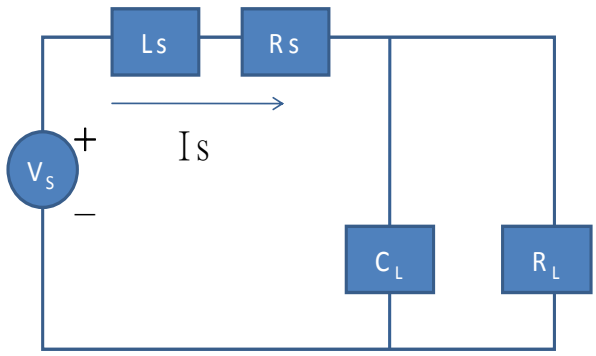

Figure 21 - Constant Impedance Mode

Ranges

When working in CZ mode, you can press the Setup key to enter the RANGE menu. Two overlapping ranges can be selected: LOW RANGE or HIGH RANGE. Impedance can be edited in either of the two ranges. Low range will supply higher accuracy and better resolution when you set lower impedance. If any value you set is outside the maximum value of the LOW RANGE, you should select HIGH RANGE. If the electronic load is in remote control mode, you can use the IMP:RANG command to switch impedance range.

Immediate Impedance level

Set the impedance level via the front panel. If the load is in CZ mode, the new impedance level setting immediately changes the input. If the load is not in CZ mode, the impedance level setting will be saved for use until mode is switched to CZ mode. You should select the channel to be edited before setting impedance parameters. Press the SETUP button to enter CZ mode. After choosing the high-low range, the front panel will display the following:

```
CH01
Rset=7500.0Ω
Vmax=82V
Vmin=0V
RLC R=7500.0Ω
RLC L=0uH
RLC C=10uF
```

Rset: set the impedance value (R_L)
Vmax: set the maximum voltage
Vmin: set the minimum voltage
RLC R: set the series resistance value (Rs)
RLC L: set the series inductance value (Ls)
RLC C: set the parallel capacitance value (C_L)

ManualsPlus.com

Setting CV, CC, CR, CW, CZ Mode

The following procedure will show you a basic example of how to set up your operation mode from the front panel.

Panel Operations	VFD Display
1. Power on the electronic load.	Self-test
2. Press ▲▼ keys to select the channel to be edited, such as channel 1.	CH01 CC OFF Vdc=0.0000V Adc=0.0000A Wdc=0.00W
3. Press Setup key to enter the channel setup menu, press Enter key to enter the <Mode> selection menu and press ▼ key to select CV, CC, CR, CW, or CZ mode. Press Enter key to confirm.	CH01 Mode=CC RANGE=HIGH Iset=9.000A
4. Press ▼ key to select <Range> selection menu. Press Enter key to enter the <Range> selection menu and press ▼ key to choose <Low Range> or <High Range>. Press Enter key to confirm.	CH01 HIGH RANGE LOW RANGE
5. Press ▼ key to select the voltage setting <Vset>, current setting <Iset>, resistance setting <Rset>, power setting, or impedance setting and press Enter key to confirm.	CH01 Const Current Set= 1.25A
6. Press ▼ key to select the rise slope setting <∫>. Input value and press Enter key to confirm. (CC mode only)	CH01 Rise Speed Set = 1.00A/Us
7. Press ▼ key to select the fall slope setting <∫>. Input value and press Enter key to confirm. (CC mode only)	CH01 Fall Speed Set = 2.00A/Us
8. Press Esc key to exit.	
9. Press On/Off key to turn on the load's input.	CH1 CC ON Vdc=0.0000V Adc=0.0000A Wdc=0.00W

ManualsPlus.com

Local Operation

Mainframe Panel

The front panel keys are effective only in the local mode. When the load is powered on, it works in local mode automatically (unless any of the remote interfaces are connected to a device controlling it) and then you can select channel number and set parameters such as voltage or current via the front panel keys. When the load is repowered on, the mainframe will scan all the installed modules once again, and can recall the parameters from the last time it was powered off.

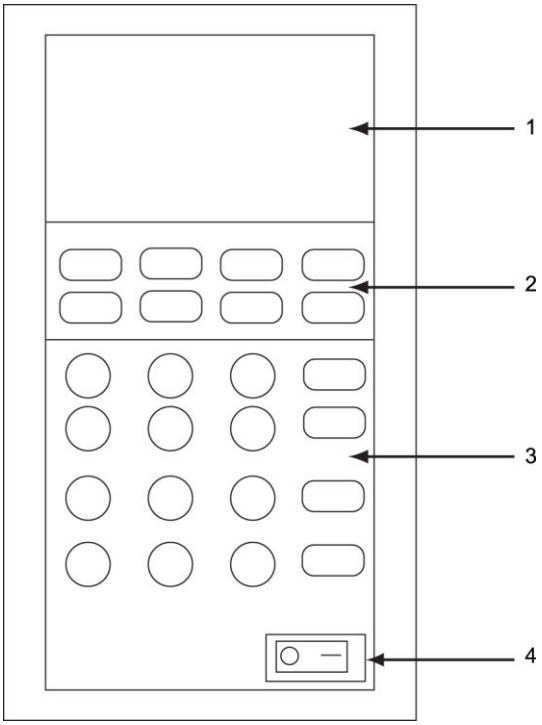

Figure 22 - MDL001 Mainframe Front Panel

1. VFD DISPLAY
   When powering on, the VFD screen will light up and show the instrument's firmware version. Then the system will begin power-on self-test, check all the installed modules of the load, and display every channel's number, voltage, and current measurements.

ManualsPlus.com

2. FUNCTION KEYS

Key	Description
Chan	This key is used to switch channels. Every module has its own channel number and can be selected from the mainframe panel.
Save	This key is used to save parameters. After selecting a channel and editing its parameters, press the Save key to save your settings into non-volatile memory. Up to 101 groups of parameters can be saved.
Recall	This key can be used to quickly recall a saved group of parameters from memory.
Setup	This key is used to enter the specific channel's menu. For example, pressing this key allows you to set up A/B transient mode and CC/CV/CR/CW/CZ mode. For more details, view the Menu List section.
On/Off	This key is used to turn the module's input state on or off. When the synchronization function in the channel menu is enabled, pressing this key can control the on/off state of all channels.
Trig	This key is used to trigger the electronic load. Select the Manual Trigger mode to use front panel triggering.
Start	This key is used to start an automatic test.
Pause	This key is used to pause an automatic test. The VFD will display pausing at each step. Press the key again to test the file continuously.

ManualsPlus.com

3. ENTRY/SHIFT KEYS

Key	Description
⓪ ① ② ③ ④ ⑤ ⑥ ⑦ ⑧ ⑨	These are number input keys.
Esc	This key can be used to exit any working state.
⊙	This key is used for decimal.
▲▼	These keys are used to move up and down the menu selection.
Enter	This key is used to confirm selection.
Shift	This key is used to enter other menus and functions.
Shift + ⑦ (System)	Press this key combination to enter the System menu.
Shift + ⑧ (Config)	Press this key combination to enter the Configuration menu.
Shift + ⑨ (Program)	Press this key combination to enter the Program menu.
Shift + ⓪ (Local)	Press this key to switch the electronic load to local mode when in remote sense mode.
Shift + ⊙ (Lock)	Press this key to lock the module's panel keys and knob. Repress the button to unlock.

4. POWER SWITCH

This switch turns the electronic load on or off.

ManualsPlus.com

Module Panel

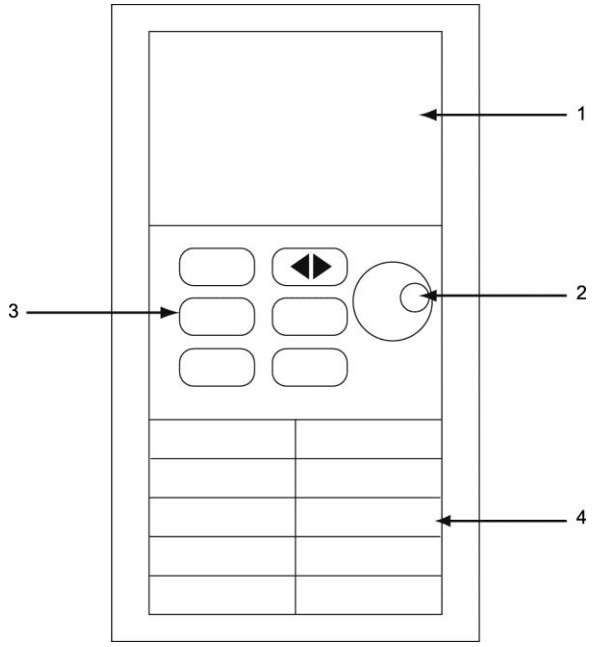

Figure 23 - Module Front Panel

1. VFD DISPLAY
   Bright VFD display shows module's operating mode.

2. ROTARY KNOB
   Used to change parameter values.

3. PANEL KEYS

Key	Description
A/B (single channel modules)	Switch A/B transient preset value.
L/R (dual-channel modules)	Switch the left/right channels. Press this key + rotary knob to control the two channels.
Short	Used for short testing. This allows the load to simulate a short circuit at the input.
Mode	Switches the operating mode (CC, CR, CV, CW, CZ).
◀ ▶	Move the cursor position. Press key to move the cursor to the position you want to edit, and then use the rotary knob to adjust value.

ManualsPlus.com

Tran	Selects the transient mode. Press this key first to enable transient mode before running A/B transient operation and then send the triggering signal to run a program.
On/Off	Control module's input on/off state

4. AIR INLET
   Module's air inlet for cooling purposes.

WARNING : Do not place any objects that may block or cover air inlet.

Module Panel Lock

Press Shift + ⊙ key to lock current channel's keys and knob operation. To unlock, press Shift + ⊙ key again.

Switching Channels

There are three ways to switch channels:
1) Press Chan + number key
2) Press Chan + ▼ key
3) Press the number key of the channel in SETUP menu

Channel Synchronization

If you want to change the synchronization of the channels, you can set this in the Configuration menu. Switch to the channel on the mainframe and then press Shift + ⑧ key to enter the Configuration menu. Select and enter the <SYNC ON SET> submenu. Select <ON> or <OFF> and press Enter. When you turn on this function, the On/Off key can control the input state of the corresponding module synchronously. In the same method, you can set up synchronization with other channels. When in remote control mode, you can send SCPI command INPut:ALL ON to synchronously load all channels.

ManualsPlus.com

VFD Indicator Function Description

The detailed illustration of the VFD and all indicator functions are as follows:

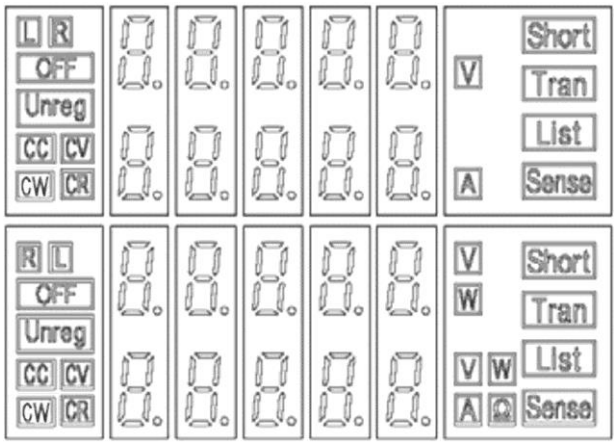

Figure 24 - Load Module VFD Panel

L/R is the indicator of the dual-channel module's left/right channel. If you want to edit left/right channel parameters, first select the channel using the L/R key. Single-channel module will always display R.

OFF indicates that the module input is off. When module input is enabled, OFF indicator will turn off.

CC/CV/CR/CW/CZ indicates the module's operating mode.

VFD display screen shows four lines of numbers. The first line shows the measured voltage value. The second line shows the measured current value. The third line shows the measured circuit's power value. The fourth line shows the setup value, and users can set A/V/Ω value here.

Short is displayed when short circuit function is enabled on the module.

Tran is displayed when TRANSIENT mode is enabled on the module.

List is displayed when selecting LIST mode in the Configuration menu.

Sense is enabled in remote sense function. There is no need to set this in the menu, as you only need to link the circuit to remote sense terminals and 'Sense' will be displayed.

ManualsPlus.com

Transient Operation

Transient operation enables the module to periodically switch between two load levels, as might be required for testing power supplies. Transient operation can be turned on and off from the front panel (Tran and Trig keys). Before you turn on the operation, you should set the parameters associated with the transient operation. The parameters include: A level, A width, B level, B width, and transient testing modes. There are three different transient testing modes: continuous, pulse, and toggle.

Continuous	Generates a respective pulse stream that toggles between two load levels.
Pulse	Generates a load change that returns to its original state after some time period.
Toggle	Generates a repetitive pulse stream that toggles between two load levels. It is similar to continuous mode except that the transient points are controlled by explicit triggers instead of an internal transient generator.

Continuous

In this mode, the electronic load generates a repetitive pulse stream that toggles between two load levels. Load could switch the state between two value settings, value A and value B.

In CC mode, transient testing can be used to check the stability of the source voltage. Transient functions have two current levels (A level, B level), which should be in the same range (high range or low range). You can set the A/B level delay time and the rise/fall slew rate via the mainframe keypad.

The slew rate determines the rate at which the level changes. Press Trig key, and the load will continuously switch between the A/B levels preset. Transient loads are usually used to test the power supply's performance under continuous changing load conditions. Figure 25 shows the current waveform of continuous transient operation mode.

ManualsPlus.com

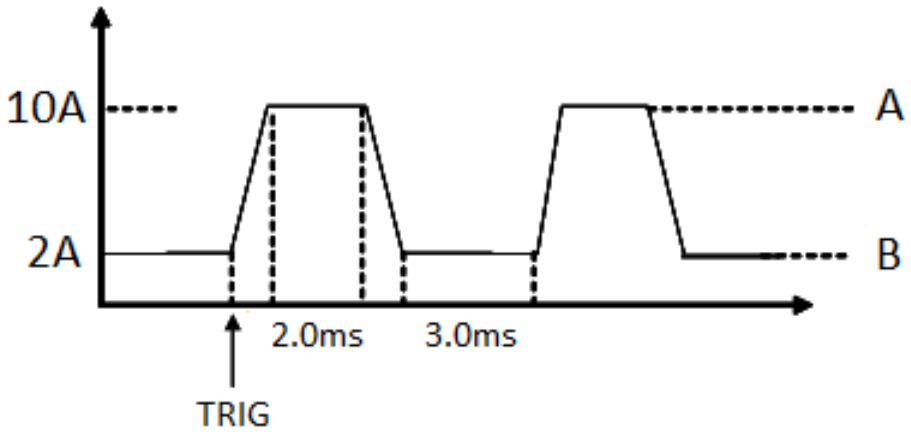

Figure 25 - Continuous Transient Operation Current Waveform

Pulse

In this mode, the electronic load generates a transient pulse of programmable width when pulse transient operation is in effect.

In pulse mode, you can set A/B level, A/B width, and A/B slew rate via the mainframe keypad. The electronic load will automatically switch to A level after maintaining A width time. Then it will switch to B level. The electronic load will not switch to A level again until the instrument receives the pulse signal. The following figure shows the current waveform in pulse transient operation.

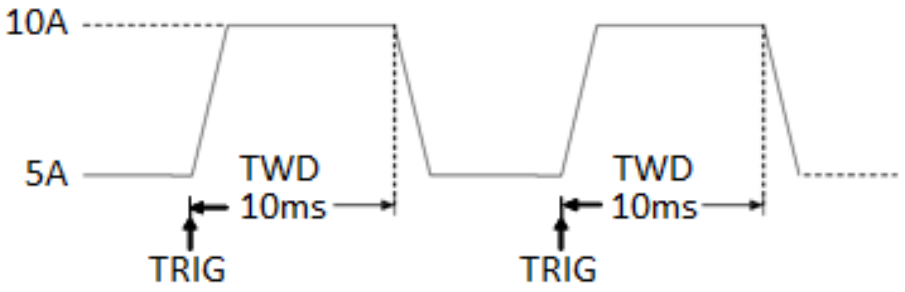

Figure 26 - Pulse Transient Operation

ManualsPlus.com

Toggle

In toggle mode, the electronic load will switch between A level and B level when receiving a trigger signal after the transient operation is enabled. The following picture shows the current waveform in toggle transient operation.

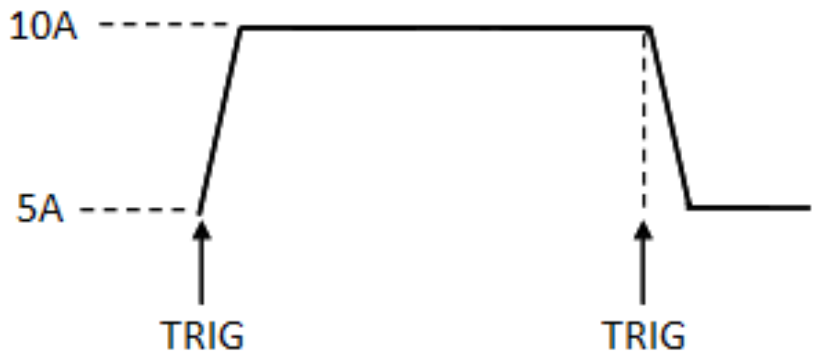

Figure 27 - Toggle Transient Operation

Setting Up A/B Transient Operation

The following is a short tutorial of how to set up A/B transient operation for your electronic load. In this example, we will set up rise speed at 1 A/us and fall speed at 2 A/us. The electronic load will be in continuous transient mode and switch between 10 A and 2 A in durations of 0.002 s and 0.003 s respectively.

Note : When setting up steps, make sure all transient level, slew, and width parameters are within the modules' specified limits.

ManualsPlus.com

A/B Transient Operation Tutorial

Panel Operations	VFD Display
1. Power on the electronic load.	Self-test
2. Press ▲▼ keys to select the channel to be edited. In this example, we select channel 1.	CH01 CC OFF Vdc = 0.0000V Adc = 0.0000A Wdc = 0.00W
3. Press Setup to enter the channel setup menu. Select <Mode> and press Enter to change the operating mode to CC mode. Press Enter to confirm.	CH01 Mode=CC RANGE=HIGH Iset=9.000A
4. Press ▼ key to select <Range> setting and press Enter. Then press ▼ key to select LOW RANGE and press Enter to confirm.	CH01 HIGH RANGE LOW RANGE
5. Press ▼ key to select the rise slope setting <∫> and press Enter. For 1A/us, input 1 and press Enter to confirm.	CH01 Rise Speed Set = 1.00A/Us
6. Press ▼ key to select the fall slope setting <∫> and press Enter. For 2A/us, input 2 and press Enter to confirm.	CH01 Fall Speed Set = 2.00A/Us
7. Press ▼ key to select A level setting <TRANa> and press Enter. For 10A, input 10 and press Enter to confirm.	CH01 Transition A Level = 10.00A
8. Press ▼ key to select A width setting <Ta> and press Enter. For 0.002s, input .002 and press Enter to confirm.	CH01 Tran. A Width = 0.002S
9. Press ▼ key to select B level setting <TRANb> and press Enter. For 2A, input 2 and press Enter to confirm.	CH01 Transition B Level = 2.00A
10. Press ▼ key to select B width setting <Tb> and press Enter. For 0.003s, input .003 and press Enter to confirm.	CH01 Tran. B Width = 0.003S
11. Press ▼ key to select transient operation mode <Tmode> and press Enter. Select Continuous and press Enter key to confirm.	CH01 Continuous Pulse Toggle

ManualsPlus.com

12. Press Esc key to exit.	CH01 CC OFF Vdc = 0.0000V Adc = 0.0000A Wdc = 0.00W
13. Press Shift + ⑦ to enter System menu. Press ▼ key to select <Trigger source> and press Enter. Select <Manual> and press Enter to confirm.	MANUAL EXTERNAL HOLD BUS TIMER
14. Press Esc key to exit.	CH01 CC OFF Vdc = 0.0000V Adc = 0.0000A Wdc = 0.00W
15. Press On/Off key to turn on the electronic load's input.	CH01 CC ON Vdc = 0.0000V Adc = 0.0000A Wdc = 0.00W
16. Press Tran key on channel 1 module to enable transient operation.	
17. Press Trig key on mainframe panel to trigger transient operation.	

Transient Operation Programming Example

If in remote control mode, you can use the following example commands for transient operation (refer to MDL Series Programming Guide for more information).

```
CURRent:TRANsient:MODE CONTinous
CURRent:TRANsient:ALEVel 10
CURRent:TRANsient:AWIDth 0.2ms
CURRent:TRANsent:BLEVel 2
CURRent:TRANsient:BWIDth 0.3ms
TRANsient ON
TRIGger:IMMediate
```

ManualsPlus.com

List Operation

List mode lets you generate complex sequences of input changes on a single channel with rapid, precise timing, which may be synchronized with internal or external signals. This is useful when running test sequences with a minimum amount of overhead.

The parameters of List operation include the name, number of steps (2-84), step width time (20us-3600s), and every steps' set value and slew rate. The list file can be saved in non-volatile memory where it can be quickly recalled. Users can edit up to 7 groups of List files in CC mode only.

In List operation mode, the electronic load begins to enable the List operation when it receives the trigger signal and will continue until the List operation is completed or the instrument receives another trigger signal.

List Sequence

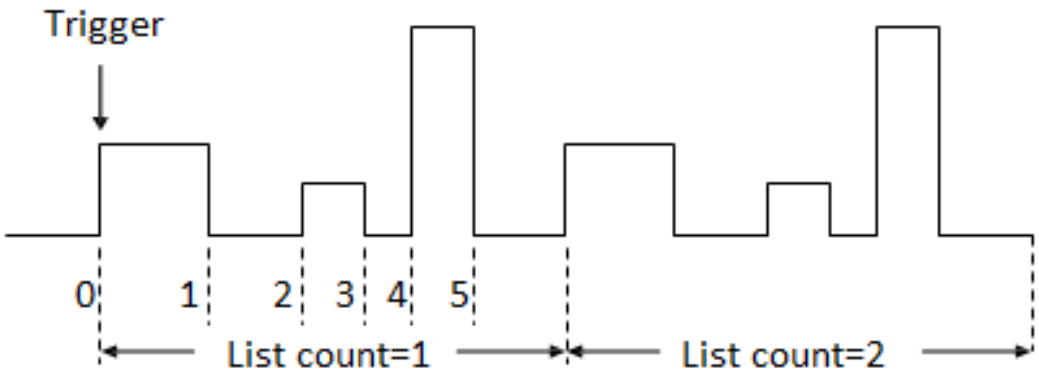

Figure 28 - List Mode Current Waveform

Setting Up List Operation Mode

The following is a quick tutorial of how to set up List Mode for your electronic load.

Panel Operations	VFD Display
1. Power on the electronic load.	Self-test

ManualsPlus.com

2. Press ▲▼ keys to select the channel to be edited.	CH01 CC ON Vdc=0.0000V Adc=0.0000A Wdc=0.00W
3. Press Shift + ⑦ to enter System menu. Press ▼ key to select <Trigger source> and press Enter. Select <Manual> and press Enter to confirm.	MANUAL EXTERNAL HOLD BUS TIMER
4. If electronic load is on, press On/Off key to turn off the electronic load's input.	CH01 CC OFF Vdc=0.0000V Adc=0.0000A Wdc=0.00W
5. Press Shift + ⑧ to enter Configuration menu. Press ▼ key to select <List> and press Enter. Press ▼ key to select <Edit List> and press Enter.	FUNCTION MODE RECALL LIST EDIT LIST EXIT
6. Press ▲▼ key to select high range or low range and press Enter to confirm.	High Range Low Range
7. Input number of steps in List. Input value and press Enter to confirm.	List file step = 5
8. Set first step's current level. Input value and press Enter key to confirm.	Step 001 level = 1A
9. Set first step's slew rate. Input value and press Enter key to confirm.	Step 001 rate = 0.5A/us
10. Set first step's width time. Input value and press Enter key to confirm.	Step 001 width = 6S
11. Set second step's current level. Input value and press Enter key to confirm.	Step 002 level = 2A
12. Set second step's slew rate. Input value and press Enter key to confirm.	Step 002 rate = 0.1A/us

ManualsPlus.com

13. Set second step's width time. Input value and press Enter key to confirm.	Step 002 width = 5S
14. Set parameters for steps 3 through 5 in the same manner described above.	
15. Set number of run cycles. Input value and press Enter to confirm.	Repeat Count = 1
16. Select memory position to save list file. Input value and press Enter to confirm.	CH01 Save list file = 1
17. Press ▲ key to select <Function Mode> and press Enter. Select <List> and press Enter to confirm.	Fixed List
18. Press Esc key twice to exit menus.	
19. Press On/Off key to turn on the electronic load's input.	CH01 CC ON Vdc = 0.0000V Adc = 0.0000A Wdc = 0.00W
20. Press Trig key to trigger List mode operation.	

ManualsPlus.com

List Mode Programming Example

If in remote control mode, you can refer to the following example to edit List operation (refer to MDL Series Programming Guide for more information).

Command	Function
LIST:RANGe 40	Sets List range
LIST:COUNT 10000	Sets List cycle
LIST:STEP 2	Sets List steps
LIST:LEVEL 1,5	Sets List step 1 level
LIST:SLEW 1,2	Sets List step 1 slew rate
LIST:WIDTH 1,1	Sets List step 1 width
LIST:LEVEL 2,1	Sets List step 2 level
LIST:SLEW 2,2	Sets List step 2 slew rate
LIST:WIDTH 2,2	Sets List step 2 width
LIST:SAV 2	Saves List to file 2
LIST:RCL 2	Recalls List file 2
FUNCTION:MODE LIST	Sets List mode function
TRIG:SOUR BUS	Sets trigger source
*TRG	Runs List file

Note : This example programs a list on a MDL200 module. For other models, make sure all range, level, slew, and transient width parameters are within the modules' specified limits.

ManualsPlus.com

Triggered Operation

Trigger Function

Trigger operation can be used in the following operations: transient pulse output, triggered output, and list output. The electronic load has five kinds of trigger modes to synchronously trigger the tested instrument. Before enabling the trigger function, users should first select trigger source.

Trigger Source

1) **Manual trigger:** When manual trigger mode is active, pressing the Trig key on the front panel will enable a trigger operation.
2) **External trigger signal (TTL level):** The 1st pin of the 8-pin connector on the rear panel of the mainframe is the trigger input terminal. When an external trigger signal is available, input a low pulse (>10us) to the input and the load will enable a trigger operation.
3) **Hold trigger:** When hold trigger is used, the load will enable a trigger operation only when the load receives the TRIG:IMM trigger command from the communication port.
4) **Bus trigger:** When bus trigger is set, the load will enable a trigger operation as soon as the load receives the trigger command GET or *TRG.
5) **Timer trigger:** When timer trigger is set, the mainframe will enable a trigger operation periodically.

Short Operation

The electronic load can simulate a short circuit at its input. During front panel operation, press the Short key to switch the short on/off state. Short operation will not affect the present setting. When turning off the short state, the load returns to the original set state.

The actual value of the electronic load in short operation depends on the mode and range that is active when the short is turned on. In CC or CR mode, the maximum short current is 120% of the current range. In CV mode, short means setting the load's constant voltage to be 0 V. In short operation mode, you can measure the maximum short current (Amax) or DC current (ADC) of the power source to be measured. You can set this function via the Configuration menu. When in remote control mode, you can send SCPI command INPut:SHORt ON to enable the short operation.

ManualsPlus.com

Input On/Off Operation

During front panel operation, press the On/Off key to switch the input on/off state. Input On/Off operation will not affect the present settings. The load/unload speed of On/Off operation is not dependent on the rise/fall slew rate. When in remote control mode, you can send SCPI command “INPut ON” to turn the input on (refer to MDL Series Programming Guide for more information on remote commands).

Von Operation

The Von voltage value can be set to control the voltage turn on state for the electronic load. When the input voltage exceeds the Von voltage value, the electronic load’s input state turns on.

This function can protect a DUT when its voltage goes below a specified level. For example, when testing a power supply’s discharge, you can set the voltage level for the power supply to begin and end discharging.

There are two different modes of Von operation, set by the Von LATCH parameter.

When Von LATCH is disabled, the electronic load will begin sinking current if input voltage exceeds Von voltage. When the input voltage drops below the Von voltage value, the electronic load will stop sinking current and the input will turn off.

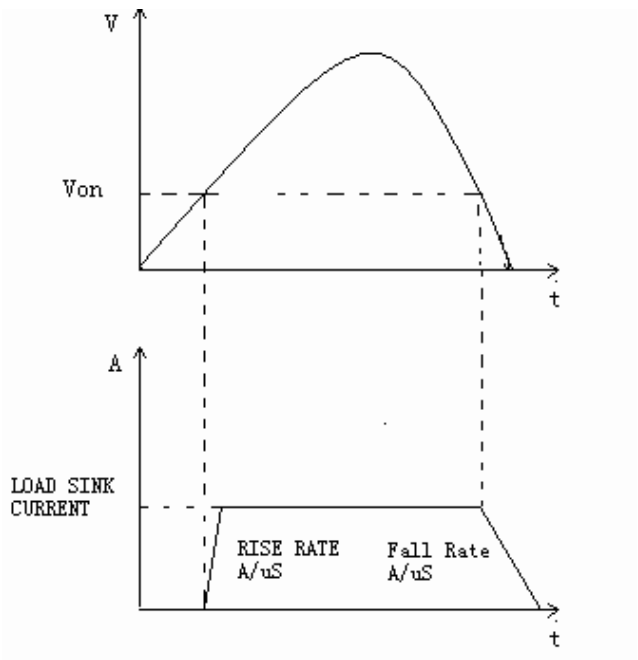

Figure 29 - Von LATCH Load's Working Range

ManualsPlus.com

When Von LATCH is enabled, the electronic load will begin sinking current if input voltage exceeds Von voltage. When the input voltage drops below the Von voltage value, the electronic load will still continue to sink current and the input remains on.

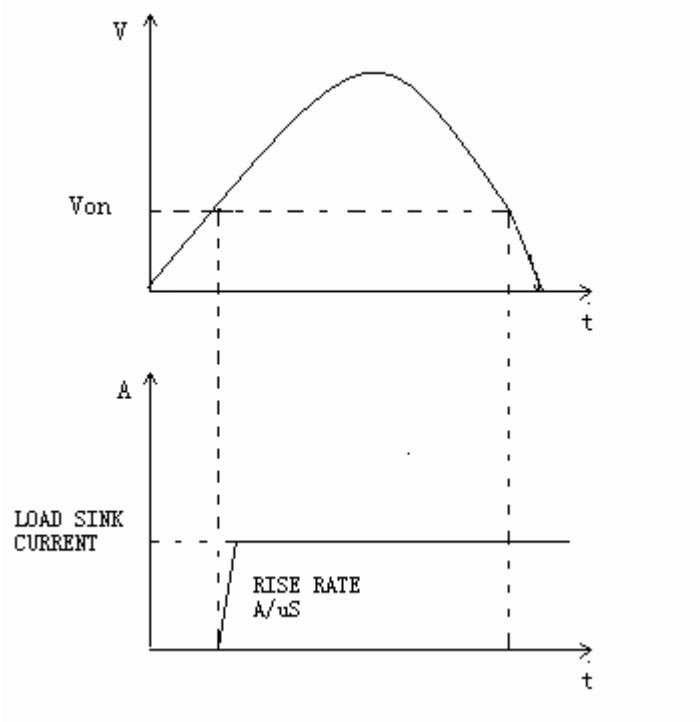

Figure 30 - Von LATCH Load's Working Range

Setting Up Von Function

The following is a quick tutorial of how to set up the Von function for your electronic load. In this example, we will set the Channel 1 Von point to 5 V and enable Von latch.

Panel Operations	VFD Display
1. Power on the electronic load.	Self-test
2. Select channel to be set up. Press 1 for channel 1.	CH01 CC OFF Vdc=0.0000V Adc=0.0000A Wdc=0.00W
3. Press Shift + ⑧ to enter Configuration menu. Press ▼ to select <Von> and press Enter.	Sync On Set Von Meter

ManualsPlus.com

4. Select <Von Point> and press Enter.	Von Point Von Latch Exit
5. Set the Von Point. Input 5 and press Enter to confirm.	Von Point Set = 5V
6. Press ▼ to select <Von Latch> and press Enter. Set on/off state. Select On and press Enter to confirm.	On Off
7. Press Esc key twice to exit menus.	
8. Press On/Off key to turn on the electronic load's input. The electronic load will begin sinking current at 5V.	

When in remote control mode, you can send SCPI command "VOLT:ON <n>" to set Von value; send "VOLT:LATch ON" to enable Von LATCH function.

Save and Recall Operation

The stored settings of all channels can be recalled. The stored parameters include operation mode, voltage/current values, slew rate, transient setting, and more. Up to 101 groups of setting parameters can be saved. Group 0 can be used for power-up settings. Groups 1 through 100 can be used for automatic testing parameters. All parameters are saved into non-volatile memory and will remain saved even in a powered down state.

To Save

Panel Operations	VFD Display
1. After setting up your parameters, press the Save key to save. It will ask for the Save Group number.	Save Group 0
2. Input the Save Group number (0-100) and press Enter to confirm.	Save Group 1

ManualsPlus.com

To Recall

Panel Operations	VFD Display
1. To recall saved data, press the Recall key. It will ask for the Recall Group number.	Recall Group 0
2. Input the Group number (0-100) you previously saved your parameters to and press Enter key to recall.	Recall Group 9

Module Controlling Link

There is an 8-pin terminal and current monitoring connector on every module's rear panel.

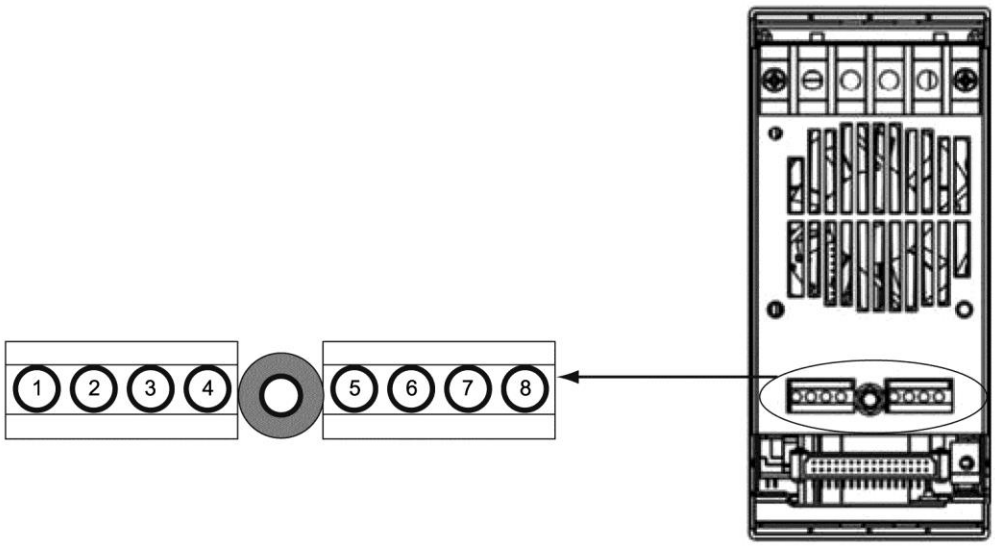

Figure 31 - Terminals on Single-Channel Module Rear Panel

ManualsPlus.com

Table 3 - Module Terminal Pinout

Pin	Signal	Description
1	GND	Ground
2	VF	Voltage fault indication terminal
3	DI	Digital input terminal
4	DO	Digital output terminal
◯	I OUT	Current monitoring output
5	SENSE +	Voltage remote measuring terminal (+)
6	SENSE -	Voltage remote measuring terminal (-)
7	EXT_PRG+	External analog controlling terminal (+)
8	EXT_PRG-	External analog controlling terminal (-)

Voltage Failure Indication

When the electronic load is under OVP or reverse protection condition, pin 2 (VF) will output a high level signal.

Current Monitoring

The current monitoring terminal will output 0-10 V analog signal accordingly to 0 - full range of the input current. You can connect an external voltmeter or an oscilloscope to display the input current's change.

Digital I/O

Digital I/O is pin 3 and pin 4 shown in Figure 31 and only used in remote control. The digital input terminal (pin 3) can detect a high/low level signal. The digital output terminal (pin 4) can output a TTL high/low level signal. It is a universal output terminal and can be used to control an external instrument.

ManualsPlus.com

Remote Sense Function

When working in CC, CV, and CR mode, if the electronic load consumes a very large current, it will cause a voltage drop in the leads between the connected device and terminals of the electronic load. In order to ensure testing accuracy, the electronic load provides a pair of remote sensing terminals in the rear panel where users can sense the output terminal voltage of the connected device. Users should set the electronic load in REMOTE SENSE mode before using this function. On the rear terminals, SENSE (+) and SENSE (–) are the remote sensing inputs. By eliminating the effect of the voltage drop in the load leads, remote sensing provides greater accuracy by allowing the electronic load to regulate directly at the source's output terminals (see Figure 12).

External Analog Control

You can control the current setting of the electronic load in CC mode using the external analog programming terminal, pin 7 and pin 8. A 0-10 V input signal will simulate 0 – full scale of the electronic load to regulate the input current of the electronic load (10V indicates the full range of electronic load’s current rating).

Automatic Test

The automatic test function of the MDL Series electronic load is useful for simulating various tests and allows the user to edit up to 10 program files. Each file has 10 steps and up to 100 steps can be edited and saved into the EEPROM. Convenient for production environments, automatic test can cascade sequences across multiple channels and allows setting of P/F criteria.

Setting Up Test Files

This is a step-by-step tutorial on how to set up a test file.

Panel Operations	VFD Display
1. Power on the electronic load.	Self-test
2. Select the channel you want to edit and then edit every group’s step. For this example, we will select channel 3 and channel 5 below. Press ▲▼ keys to switch channel to 3.	CH03 CC OFF Vdc=0.0000V Adc=0.0000A Wdc=0.00W

ManualsPlus.com

3. Press Setup key to enter the channel setup menu, press Enter key to enter the <Mode> selection menu and press ▼ key to select the operating mode. Every step's mode can be edited. Press Enter key to confirm.	MODE= CC RANGE= HIGH Iset= 1.00A
4. Press ▼ key to select <ISet>. Press Enter to enter the menu and set the working current. For example, to set 1A, press ① and then Enter to confirm.	Const Current Set= 1.000A
5. Press ▼ key to move the cursor to Vmax=82.000V and press Enter to set the upper limit of testing voltage. In this example, the first step is 5.8V. Press ⑤ ⊙ ⑧ and then Enter to confirm.	Voltage Upper Limit=5.800V
6. Press ▼ key to move the cursor to Vmin=0.000V and press Enter to set the lower limit of testing voltage. In this example, the first step is 0.15V. Press ⊙ ① ⑤ and then Enter to confirm.	Voltage Lower Limit=0.150V
7. After editing the first step of channel 3, press Esc key to exit the menu.	
8. Press ▲▼ keys to select channel 5. To edit the first step of channel 5, repeat steps 3 through 6 with desired parameters.	CH05 CC OFF Vdc=0.0000V Adc=0.0000A Wdc=0.00W
9. After editing the first step of channel 5, press Esc key to exit the menu.	
10. Save the edited first step of channel 3 and channel 5. Press Save and ① to save step 1. Press Enter to confirm.	Save Group 1
11. In the same manner, you can edit the rest of the steps for channel 3 and channel 5 by repeating steps 2 through 10 above. These saved groups correspond to sequences that will be selected in your program below.	
12. Press Shift + ⑨ key to enter the Program menu. Press ▼ key to select <Edit Program> and press Enter.	Run Program Recall Prog Edit Program Exit

ManualsPlus.com

13. The MDL Series with mainframe extension can support a maximum of 16 channels. 0 represents the MDL001 mainframe and 1 represents the MDL002 mainframe extension. □7□5□3□1 indicates channels 1, 3, 5, and 7 have been equipped with electronic load modules.	Active Channel 0 : □ 7 □ 5 □ 3 □ 1 1 : □□□□□□□□
14. Select the channels to be tested. For instance, if you want to select channels 3 and 5, press number keys 3 and 5. 'Y' denotes the channel is selected. If you want to cancel a channel, press the number key again to cancel. Then press Enter to confirm your selection.	Active Channel 0 : □ 7 □ 5 □ 3 □ 1 1 : □□□□□□□□
15. Select the steps needed to test. For example, if you want to test 4 steps, press 1 2 3 4 (0 stands for the tenth step). If you want to cancel a step, press the number key again to cancel. Press Enter to confirm your selection.	Active SEQ. 0 9 8 7 6 5 Y Y Y Y
16. If you want to suspend a step, press the number key of the step. For example, to suspend step 2, press 2. Press the number key again to cancel. Then press Enter to confirm your selection.	Pause Sequence □□□□□□ 4 3 Y 1
17. To edit the first step of the 4 steps, determine whether you need short circuit testing on channel 3 and 5. For example, if channel 3 needs short circuit testing, input 3. Then press Enter to confirm your selection.	SEQ01 Short CH 0 : □□□ 5 □ Y □□ 1 : □□□□□□□□
18. Set load on time (T_{on}). For example, if you need 2s, input 2 and then press Enter key to confirm.	SEQ01 On Time = 2.0S
19. Set load off time (T_{off}). For example, if you need 2s, input 2 and then press Enter key to confirm.	SEQ01 Off Time = 2.0S
20. Set test delay time (T_{pf}). For example, if you need 1s, input 1 and then press Enter key to confirm.	SEQ01 P/F Delay Time = 1.0S

ManualsPlus.com

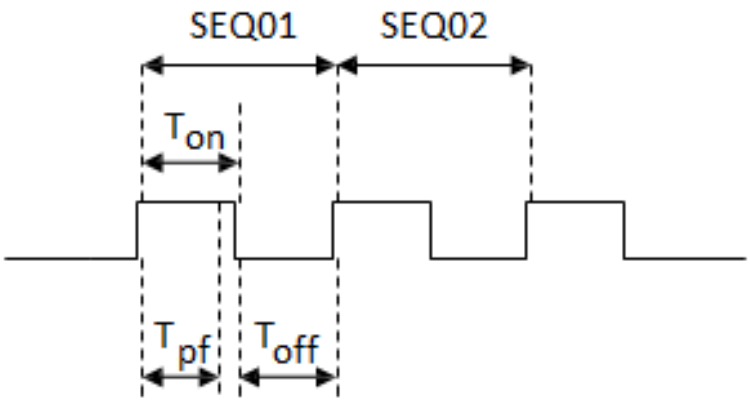

$0 \le T_{pf} \le (T_{on} + T_{off})$

Tpf is test delay time

21. Repeat steps 17 through 20 and set the rest of the steps' load on/off time.	
22. Set condition for when to stop testing. COMPLETE means to stop test when all steps are completed. FAILURE means to stop test when testing fails. Press ▲▼ keys to select condition and press Enter to confirm.	Stop Condition Complete Failure
23. Program chain is used when you need to link to the next file to be tested. For example, if you need to link to group 2, press 2. If you do not need to link to another file, input ⓪ and then press Enter key to confirm.	Program Chain NO: 2
24. Save the edited files into the EEPROM. Up to 10 program files can be saved. For instance, press 1 to save the edited file to program file 1 and then press Enter to confirm.	Save Program NO: 1
25. Press Esc key to exit menu.	Run Program Recall Prog Edit Program Exit

ManualsPlus.com

Table 4 - Save Table

PROGRAM 1 Sequence	1	2	3	4	5	6	7	8	9	10
Save Group	1	2	3	4	5	6	7	8	9	10
PROGRAM 2 Sequence	1	2	3	4	5	6	7	8	9	10
Save Group	11	12	13	14	15	16	17	18	19	20
PROGRAM 3	1	2	3	4	5	6	7	8	9	10
Save Group	21	22	23	24	25	26	27	28	29	30
PROGRAM 4 Sequence	1	2	3	4	5	6	7	8	9	10
Save Group	31	32	33	34	35	36	37	38	39	40
PROGRAM 5 Sequence	1	2	3	4	5	6	7	8	9	10
Save Group	41	42	43	44	45	46	47	48	49	50
PROGRAM 6 Sequence	1	2	3	4	5	6	7	8	9	10
Save Group	51	52	53	54	55	56	57	58	59	60
PROGRAM 7 Sequence	1	2	3	4	5	6	7	8	9	10
Save Group	61	62	63	64	65	66	67	68	69	70
PROGRAM 8 Sequence	1	2	3	4	5	6	7	8	9	10
Save Group	71	72	73	74	75	76	77	78	79	80
PROGRAM 9 Sequence	1	2	3	4	5	6	7	8	9	10
Save Group	81	82	83	84	85	86	87	88	89	90
PROGRAM 10 Sequence	1	2	3	4	5	6	7	8	9	10
Save Group	91	92	93	94	95	96	97	98	99	100

ManualsPlus.com

Recall Test Files

The following is a procedure of how to recall edited test files from the EEPROM.

Panel Operations	VFD Display
1. Press Shift + ⑨ to enter the Program menu.	Run Program Recall Prog Edit Program Exit
2. Press ▼ key to select <Recall Prog> and press Enter. Input the saved program number and press Enter to recall the saved testing file.	Program Select NO: 1
3. To run the program, press ▲ key to select <Run Program> and press Enter.	PROG.01 Stop Result:
4. Press Start key to start automatic testing. If you need to pause, press Pause key and then press ▼ key to continue.	

Remote Operation

There are four types of communication interfaces available: USB, Ethernet, GPIB, and RS-232. You can choose any one of them to communicate with a PC.

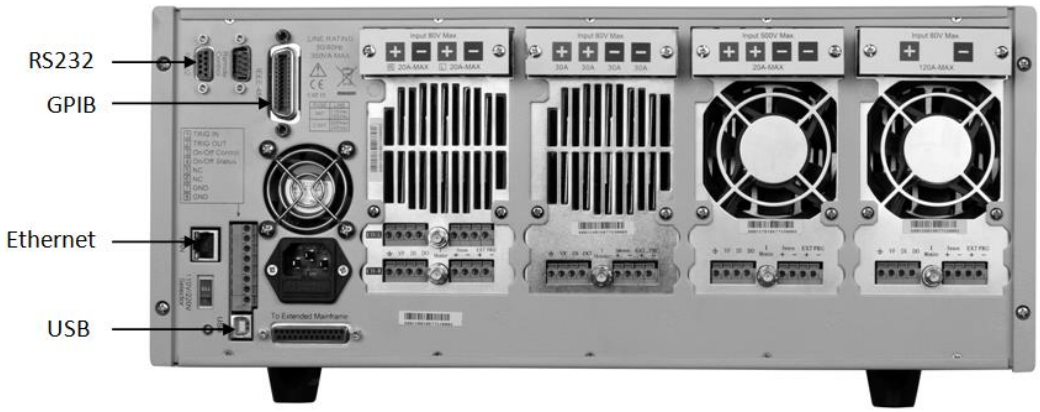

Figure 32 – Mainframe Rear Panel Communication Interfaces

ManualsPlus.com

USB Interface

Use Type A to Type B USB cables to connect the electronic load and the PC. All electronic load functions are programmable over the USB. Press Shift + ⑦ on the front panel to enter the System menu. Select <Communication> and choose <USBTMC-USB488>.

The USB488 interface capabilities of the electronic load are described below:

- The interface is IEEE 488.2 standard USB488 interface.
- The interface accepts REN_CONTROL, GO_TO_LOCAL, and LOCAL_LOCKOUT requests.
- The interface accepts MsgID = TRIGGER USBTMC command message and forwards TRIGGER requests to the function layer.

The USB488 device capabilities of the electronic load are described below:

- The device understands all mandatory SCPI commands.
- The device is SR1 capable.
- The device is RL1 capable.
- The device is DT1 capable.

Ethernet Interface

Use a network cable to connect PC through Ethernet interface of the electronic load. Press Shift + ⑦ on the front panel to enter the System menu. Select <Communication> and choose <ETHERNET>. Then select <Ethernet Set> to set gateway address <Gateway Set>, IP address <IP Set>, mask address <Mask set>, and port <port set>.

GPIB Interface

First connect GPIB port of electronic load to GPIB card of PC. There must be sufficient contact. Tighten the screws and then set the address. The address can be set from 0 to 31. Press Shift + ⑦ key to enter the System menu. Select <Communication> and choose <GPIB>. The electronic load operates from a GPIB address set from the front panel. To set the GPIB address, press ▼ key to select <GPIB Address>. Input the address and press Enter key to confirm. The GPIB address is stored in non-volatile memory.

ManualsPlus.com

RS-232 Interface

Use a cable with two COM interfaces (DB9) to connect the electronic load and PC. It can be activated by selecting <RS-232> in <Communication> of the System menu. NOTE: There are two COM interfaces on the rear panel of the MDL001 mainframe: the left 9-pin COM interface is the RS-232 communication interface and the right 9-pin COM serial port connection is not for use. All SCPI commands are available through RS-232 programming. The EIA RS-232 standard defines the interconnections between data terminal equipment (DTE) and data communications equipment (DCE). The electronic load is designed to be a DTE and can be connected to another DTE such as a PC COM port through a null modem cable.

NOTE : The RS-232 settings in your program must match the settings specified in the front panel System menu. Press Shift + ⑦ on the front panel to enter the System menu if you need to change the settings.

RS-232 Data Format

The RS-232 data is a 10-bit word with one start bit and one stop bit.

Parity=None	Start Bit	8 Data Bits	Stop Bit

The number of start and stop bits are not programmable. However, the following parameters are selectable in the System menu using the front panel Shift + ⑦ key.

Baud Rate

The System menu lets you select one of the following baud rates, which are stored in non-volatile memory: 4800, 9600, 19200, 38400, 57600, or 115200.

Parity

None - eight data bits without parity
Even - seven data bits with even parity
Odd - seven data bits with odd parity

ManualsPlus.com

RS-232 Flow Control

The RS-232 interface supports the following flow control options. For each case, the electronic load will send a maximum of five characters after hold-off is asserted by the controller. The electronic load is capable of receiving as many as fifteen additional characters after it asserts hold-off.

- CTS/RTS: The electronic load asserts its Request to Send (RTS) line to signal hold-off when its input buffer is almost full, and it interprets its Clear to Send (CTS) line as a hold-off signal from the controller.
- XON/XOFF: When the input queue of the electronic load becomes more than ¾ full, the instrument issues an X-OFF command. The control program should respond to this and stop sending characters until the electronic load issues the X-ON, which it will do once its input buffer has dropped below half-full. The electronic load recognizes X_ON and X_OFF sent from the controller. An X-OFF will cause the electronic load to stop outputting characters until it sees an X-ON.
- NONE: No flow control.

Flow control options are stored in non-volatile memory.

RS-232 Connections

The RS-232 serial port can be connected to the serial port of a controller (i.e., personal computer) using a straight-through RS-232 cable terminated with DB-9 connectors. Do not use a null modem cable. Figure 33 shows the pinout for the connector.

If your computer uses a DB-25 connector for the RS-232 interface, you will need a cable or adapter with a DB-25 connector on one end and a DB-9 connector on the other. It must be a straight-through (not null modem) cable.

Figure 33 - RS-232 Connector Pinout

ManualsPlus.com

Pin	Signal	Description
1	NC	No Connection
2	TXD	Transmit Data
3	RXD	Receive Data
4	NC	No Connection
5	GND	Ground
6	NC	No Connection
7	CTS	Clear to Send
8	RTS	Ready to Send
9	NC	No Connection

RS-232 Troubleshooting

If you are having trouble communicating over the RS-232 interface, check the following:

- The computer and the electronic load must be configured for the same baud rate, parity, number of data bits, and flow control options. Note that the electronic load is configured for 1 start bit and 1 stop bit (these values are fixed).
- The correct interface cables or adapters must be used, as described under the RS-232 connector. Note that even if the cable has the proper connectors for your system, the internal wiring may be incorrect.
- The interface cable must be connected to the correct serial port on your computer (COM1, COM2, etc.) and the correct 9-pin serial port on the mainframe.

Communication Setting

Before communicating, please make sure that the following parameters of the electronic load match that of the PC. You can enter the System menu (Shift + ⑦) to make any changes.
Baud rate : 9600 (5800, 9600, 19200, 38400, 57600, 115200)
Data bit : 8
Stop bit : 1
Parity : None (None, Even, Odd)
Local address : 0 (0 through 31, default setting is 0)

NOTE: When communicating with a PC, you can only use one communication interface at a time.

ManualsPlus.com

Specifications

Model		MDL200	MDL252	MDL305	MDL400	MDL505	MDL600
Input Ratings							
Input Voltage		0-80 V	0-80 V	0-500 V	0-80 V	0-500 V	0-80 V
Input Current	Low	0-4 A	0-3 A	0-3 A	0-6 A	0-3 A	0-12 A
	High	0-40 A	0-20 A	0-20 A	0-60 A	0-30 A	0-120 A
Input Power		200 W	250 W [1]	300 W	400 W	500 W	600 W
Channels		1	2	1	1	1	1
Minimum Operating Voltage	Low	0.10 V at 4 A	0.15 V at 3 A	0.7 V at 3 A	0.15 V at 6 A	0.54 V at 3 A	0.18 V at 12 A
	High	1 V at 40 A	1 V at 20 A	4.5 V at 20 A	1.5 V at 60 A	5.4 V at 30 A	1.8 V at 120 A
CV Mode							
Range	Low	0-18 V					
	High	0-80 V	0-80 V	0-500 V	0-80 V	0-500 V	0-80 V
Resolution	Low	1 mV					
	High	10 mV					
Accuracy	Low	±(0.05%+0.02%FS)					
	High	±(0.05%+0.025%FS)					
CC Mode							
Range	Low	0-4 A	0-3 A	0-3 A	0-6 A	0-3 A	0-12 A
	High	0-40 A	0-20 A	0-20 A	0.001-60 A	0-30 A	0-120 A
Resolution	Low	0.1 mA	0.1 mA	0.1 mA	0.1 mA	1 mA	0.1 mA
	High	1 mA	1 mA	1 mA	1 mA	10 mA	1 mA
Accuracy	Low	±(0.05%+0.05%FS)					±(0.05%+0.1%FS)
	High	±(0.05%+0.05%FS)					±(0.1%+0.1%FS)
CR Mode							
Range	Low	0.05 Ω-10 Ω	0.05 Ω-10 Ω	0.25 Ω-10 Ω	0.05 Ω-10 Ω	0.2 Ω-10 Ω	0.2 Ω-10 Ω
	High	10 Ω-7.5 kΩ					
Resolution		16 bit					
Accuracy	Low	0.01%+0.08 S					
	High	0.01%+0.0008 S					
CW Mode							
Range		200 W	250 W	300 W	400 W	500 W	600 W
Resolution		10 mW					
Accuracy		±(0.2%+0.2%FS)					

ManualsPlus.com

Model		MDL200	MDL252	MDL305	MDL400	MDL505	MDL600
Transient Mode (CC mode)							
T1&T2		20us-3600s/Res:5us-10ms					
Accuracy		5us+100ppm					
Slew Rate [2]	Low	0.0001-0.25 A/us	0.0001-0.2 A/us	0.0001-0.1 A/us	0.0001-0.25 A/us	0.0001-0.1 A/us	0.0001-0.25 A/us
	High	0.001-2.5 A/us	0.001-2 A/us	0.001-1 A/us	0.001-2.5 A/us	0.001-1 A/us	0.001-2.5 A/us
Accuracy		within 40% of programmed value					
Measurement							
Readback voltage							
Range	Low	0-18 V	0-18 V	0-18 V	0-18 V	0-18 V	0-18 V
	High	0-80 V	0-80 V	0-500 V	0-80 V	0-500 V	0-80 V
Resolution	Low	0.1 mV	0.1 mV	1 mV	0.1 mV	1 mV	0.1 mV
	High	1 mV	1 mV	10 mV	1 mV	10 mV	1 mV
Accuracy		±(0.025%+0.025%FS)					
Readback current							
Range	Low	0-4 A	0-3 A	0-3 A	0-6 A	0-3 A	0-12 A
	High	0-40 A	0-20 A	0-20 A	0-60 A	0-30 A	0-120 A
Resolution	Low	0.01 mA	0.01 mA	0.01 mA	0.1 mA	0.01 mA	0.1 mA
	High	0.1 mA	0.1 mA	0.1 mA	1 mA	0.1 mA	1 mA
Accuracy	Low	±(0.05%+0.05%FS)					±(0.05%+0.1%FS)
	High						±(0.1%+0.1%FS)
Readback power							
Range		200 W	250 W	300 W	400 W	500 W	600 W
Resolution		10 mW	10 mW	10 mW	10 mW	10 mW	10 mW
Accuracy		±(0.2%+0.2%FS)					
Protection Range							
OPP		≒200 W	≒250 W	≒300 W	≒400 W	≒500 W	≒600 W
OCP	Low	≒4.4 A	≒3.3 A	≒3.3 A	≒6.6 A	≒3.3 A	≒13.2 A
	High	≒44 A	≒22 A	≒22 A	≒66 A	≒33 A	≒132 A
OVP		≒82 V	≒82 V	≒510 V	≒82 V	≒510 V	≒82 V
OTP		≒85℃					
General							
Short Circuit							
Current (CC)	Low	≒4 A	≒3 A	≒3 A	≒6 A	≒3 A	≒12 A
	High	≒40 A	≒30 A	≒20 A	≒60 A	≒30 A	≒120 A
Voltage (CV)		0 V					
Resistance (CR)		≒25 mΩ	≒50 mΩ	≒220 mΩ	≒25 mΩ	180 mΩ	≒15 mΩ
Input Terminal Impedance		300 kΩ	300 kΩ	≒1 MΩ	300 kΩ	1 MΩ	300 kΩ

Notes:

[1] MDL252: User can allocate up to 250 W to either channel up to 300 W total (e.g. 50 W/250 W, 250 W/50 W, 150 W/150 W).

[2] The slew rate specifications are not warranted but are descriptions of typical performance. The actual transition time is defined as the time for the input to change from 10% to 90%, or vice versa, of the programmed current values. In case of very large load changes, e.g. from no load to full load, the actual transition time will be larger than the expected time. The load will automatically adjust the slew rate to fit within the range (high or low) that is closest to the programmed value.

ManualsPlus.com

Supplementary Characteristics

Memory capacity
101 Groups

Recommended calibration period
Once per year

AC power input (selectable by switch on the rear panel)
Option 1: 220 V ±10%, 50/60 Hz
Option 2: 110 V ±10%, 50/60 Hz

Cooling method
Fan cool

Environmental conditions
This instrument is intended for indoor use in a pollution degree 2 environment. Environmental limits are as follows:

Operating temperature	0 to 40 °C
Storage temperature	-10 to 60 °C
Humidity	Indoor use, ≤ 95%

Dimensions and weight

Model	Type	Dimensions (W x H x D)	Weight
MDL001	Mainframe	445 x 183 x 549 mm	15.4 kg
MDL002	Mainframe Extension	445 x 183 x 549 mm	15.4 kg
MDL200	Module	82 x 183 x 573 mm	5 kg
MDL252	Module	82 x 183 x 573 mm	5 kg
MDL305	Module	82 x 183 x 573 mm	5 kg
MDL400	Module	82 x 183 x 573 mm	5 kg
MDL505	Module	82 x 183 x 573 mm	5 kg
MDL600	Module	82 x 183 x 573 mm	5 kg

ManualsPlus.com

SERVICE INFORMATION

Warranty Service: Please go to the support and service section on our website at www.bkprecision.com to obtain an RMA #. Return the product in the original packaging with proof of purchase to the address below. Clearly state on the RMA the performance problem and return any leads, probes, connectors and accessories that you are using with the device.

Non-Warranty Service: Please go to the support and service section on our website at www.bkprecision.com to obtain an RMA #. Return the product in the original packaging to the address below. Clearly state on the RMA the performance problem and return any leads, probes, connectors and accessories that you are using with the device. Customers not on an open account must include payment in the form of a money order or credit card. For the most current repair charges please refer to the service and support section on our website.

Return all merchandise to B&K Precision Corp. with pre-paid shipping. The flat-rate repair charge for Non-Warranty Service does not include return shipping. Return shipping to locations in North America is included for Warranty Service. For overnight shipments and non-North American shipping fees please contact B&K Precision Corp.

B&K Precision Corp.
22820 Savi Ranch Parkway
Yorba Linda, CA 92887
www.bkprecision.com
714-921-9095

Include with the returned instrument your complete return shipping address, contact name, phone number, and description of problem.

ManualsPlus.com

LIMITED THREE-YEAR WARRANTY

B&K Precision Corp. warrants to the original purchaser that its products and the component parts thereof will be free from defects in workmanship and materials for a period of three years from date of purchase.

B&K Precision Corp. will, without charge, repair or replace, at its option, defective product or component parts. Returned product must be accompanied by proof of the purchase date in the form of a sales receipt.

To help us better serve you, please complete the warranty registration for your new instrument via our website at www.bkprecision.com.

Exclusions: This warranty does not apply in the event of misuse or abuse of the product or as a result of unauthorized alterations or repairs. The warranty is void if the serial number is altered, defaced, or removed.

B&K Precision Corp. shall not be liable for any consequential damages, including without limitation damages resulting from loss of use. Some states do not allow limitations of incidental or consequential damages. So the above limitation or exclusion may not apply to you. This warranty gives you specific rights and you may have other rights, which vary from state-to-state.

B&K Precision Corp.
22820 Savi Ranch Parkway
Yorba Linda, CA 92887
www.bkprecision.com
714-921-9095

ManualsPlus.com

22820 Savi Ranch Parkway
Yorba Linda, CA 92887
www.bkprecision.com

© 2013 B&K Precision Corp.

Printed in China v111213