ManualsPlus.com

BK PRECISION®

Model: XLN3640, XLN6024, XLN8018, XLN10014

Click for models XLN15010, XLN30052 & XLN60026

High Power Programmable DC Power Supply

USER MANUAL

ManualsPlus.com

Safety Summary

The following safety precautions apply to both operating and maintenance personnel and must be observed during all phases of operation, service, and repair of this instrument. Before applying power, follow the installation instructions and become familiar with the operating instructions for this instrument.

Failure to comply with these precautions or with specific warnings elsewhere in this manual violates safety standards of design, manufacture, and intended use of the instrument. B&K Precision assumes no liability for a customer's failure to comply with these requirements. This is a Safety Class I instrument.

GROUND THE INSTRUMENT

To minimize shock hazard, the instrument chassis and cabinet must be connected to an electrical ground. This instrument is grounded through the ground conductor of the supplied, three-conductor ac power cable. The power cable must be plugged into an approved three-conductor electrical outlet. Do not alter the ground connection. Without the protective ground connection, all accessible conductive parts (including control knobs) can render an electric shock. The power jack and mating plug of the power cable meet IEC safety standards.

DO NOT OPERATE IN AN EXPLOSIVE ATMOSPHERE

Do not operate the instrument in the presence of flammable gases or fumes. Operation of any electrical instrument in such an environment constitutes a definite safety hazard.

KEEP AWAY FROM LIVE CIRCUITS

Instrument covers must not be removed by operating personnel. Component replacement and internal adjustments must be made by qualified maintenance personnel. Disconnect the power cord before removing the instrument covers and replacing components. Under certain conditions, even with the power cable removed, dangerous voltages may exist. To avoid injuries, always disconnect power and discharge circuits before touching them.

DO NOT SERVICE OR ADJUST ALONE

Do not attempt any internal service or adjustment unless another person, capable of rendering first aid and resuscitation, is present.

ManualsPlus.com

DO NOT SUBSTITUTE PARTS OR MODIFY THE INSTRUMENT

Do not install substitute parts or perform any unauthorized modifications to this instrument. Return the instrument to B&K Precision for service and repair to ensure that safety features are maintained.

WARNINGS AND CAUTIONS

WARNING and ***CAUTION*** statements, such as the following examples, denote a hazard and appear throughout this manual. Follow all instructions contained in these statements.

A ***WARNING*** statement calls attention to an operating procedure, practice, or condition, which, if not followed correctly, could result in injury or death to personnel.

A ***CAUTION*** statement calls attention to an operating procedure, practice, or condition, which, if not followed correctly, could result in damage to or destruction of part or all of the product.

WARNING: Do not alter the ground connection. Without the protective ground connection, all accessible conductive parts (including control knobs) can render an electric shock. The power jack and mating plug of the power cable meet IEC safety standards.

WARNING: To avoid electrical shock hazard, disconnect power cord before removing covers. Refer servicing to qualified personnel.

CAUTION: Before connecting the line cord to the AC mains, check the rear panel AC line voltage indicator. Applying a line voltage other than the indicated voltage can destroy the AC line fuses. For continued fire protection, replace fuses only with those of the specified voltage and current ratings.

CAUTION: This product uses components which can be damaged by electro-static discharge (ESD). To avoid damage, be sure to follow proper procedures for handling, storing and transporting parts and subassemblies which contain ESD-sensitive components.

ManualsPlus.com

Store/Move/Maintain

Storage

When this device is not in use, properly package it and store it in an environment suitable for storage (if present in a good preserving environment, the packaging process can be waived).

Freight

While moving this product, move it by using the original packaging to pack this product in advance. If the packaging material is lost, use an equivalent buffer material to replace it in packaging; and with external marks indicating “fragile & water-prevention”.

Maintenance

Please return the power supply to factory for any repair, service, or maintenance.

Disposal

When the device is in an unusable condition and can’t be repaired, please discard it according to your company’s disposal procedures or local legal procedures. Don’t discard arbitrarily to avoid polluting the environment.

ManualsPlus.com

Table of Contents

1. Preface 1

1.1 Products Outline 1

1.2 Features 2

1.3 Specifications 4

2. Cautions Before Using 9

2.1 Check and Confirm Accessories before Using 9

2.2 Operation Instructions 9

2.3 Ambient Environment 9

2.4 Storage 10

2.5 Power-line voltage 10

2.6 Fuses 10

2.7 Warm-up Time 11

2.8 Power-off procedure 11

2.9 Cautions in Operation 11

3. Front Panel Operation 12

3.1 XLN3640/XLN6024/XLN8018/XLN10014 Panel 12

3.1.1 Front Panel 12

3.1.2 Rear Panel 30

4. Operation Instructions 34

4.1 Voltage Setting 34

4.2 Current Setting 34

4.3 Over-voltage Protection OVP 34

4.4 Over-current Protection OCP 34

4.5 Voltage Output 35

ManualsPlus.com

4.6 Control Voltage Output with Rotary knob 35
4.7 Timer Function 35
4.8 Series (cascade) / Parallel Mode Setting 36
4.8.1 Parallel Connection Setting 36
4.8.2 Series Mode Setting 38
4.8.3 Error Message of Series/Parallel Connection 41
4.9 External Tuning Setting 42
4.10 Timer of Current Flow 43
4.11 Programmable Capability (SCPI Command Only) 44
4.12 Multi-unit Connection mode (RS485) 50
5. Protection and Error Messages 54
5.1 Over-voltage Protection (OVP) 54
5.2 Over-current Protection (OCP) 54
5.3 Overpower Protection (OPP) 54
5.4 Constant Voltage Protection (CV TO CC) 55
5.5 Constant Current Protection (CC TO CV) 55
5.6 Over-temperature Protection (OTP) 55
5.7 Low Voltage Protection (ACD) 56
5.8 Error Input Message 56
6. Remote Interface communication protocol 57
6.1 Prefaces 57
6.2 Parameters Definition 57
6.3 The Error/Event List 58
6.4 Remote Communication Protocol 59
6.5 SCPI Conformity Information 62
6.5.1 Common SCPI commands 62
6.5.2 SCPI Command subsystem 63

ManualsPlus.com

6.6 State Bit Definition 74
6.7 LAN Communication (-GL versions) 75
Using Web Server 75
Main Page (Home) 75
Using Telnet 78
Using Sockets 78
7. Assemble Accessories 79
7.1 Assemble Rack Mount Brackets 79
7.2 Assembly of Output Protective Cover (XLN6024/XLN8018/XLN10014) 80
7.3 Assembly of Remote Sense Protective Cover (XLN6024/XLN8018/XLN10014) 81
8. Accessories 82
9. Service Information 84
10. Limited Three-year Warranty 85

ManualsPlus.com

1. Preface

1.1 Products Outline

B&K Precision models XLN3640/XLN6024/XLN8018/XLN10014 are programmable DC power supplies with single outputs that offer the maximum power output up to 1440 watts (0 -- 36 V/40 A or 0 -- 60 V/24 A or 0 -- 80 V/18 A or 0 -- 100 V/14.4 A). With a 16-bit D/A, A/D converter embedded, the power supplies come with the resolution of 1mV in voltage setting and 1mA in current setting. By connecting up to 4 power supplies in parallel or series, a maximum power output up to 5760 watts can be generated. With four XLN10014 connected in series, the maximum output voltage can reach 400 V. With four XLN3640 connected in parallel, the output current can reach up to 160 A.

The XLN series provides a rotary control knob and numerical and function keys to make the instrument convenient and easy to use. Additionally, the power supplies provide a memory space for storage of 10 instrument settings that can be recalled directly. This feature offers an easy way to restore the application settings. In addition, users can program to control when to cut off the output. This feature provides extra safety for burn-in and electroplating applications. The supplies also provide over voltage protection (OVP), over current protection (OCP), and over power protection (OPP) features used to keep the output voltage and current within safety level and preventing damage to the UUT (Unit Under Test) due to excessive current. The key lock feature is added to avoid accidental setting changes to the XLN series. When the input power and the load change, the power supplies maintain a stable output due to load and line regulation of less than 0.05%; the transient time less than 1 ms. In remote mode, the supplies can output a new voltage/current setting 50 ms after receiving a command, which can increase the throughput on production lines.

ManualsPlus.com

1.2 Features

1) Output Voltage & Current

Voltage output range: **0 -- 36V (XLN3640) / 0 -- 60V (XLN6024) 0 -- 80V (XLN8018) / 0 -- 100V (XLN10014)**
Current output range: **0 -- 40A (XLN3640) / 0 -- 24A (XLN6024) 0 -- 18A (XLN8018) / 0 -- 14.4A (XLN10014)**
Power output range: **0 -- 1440W**

2) Rotary knob, numerical keys and functions keys

The rotary knob can be used to rapidly change the output voltage setting and simulate the surge of the voltage output. It offers a good solution for testing triggering circuits. Numerical keys allow for direct entry of parameters. Using function keys to switch modes makes the overall operation more convenient.

3) Precise voltage and current measurement

Besides the precise output, the XLN series also offers the capability to measure voltage & current accurately (read back), saving users the extra expense and space for extra measuring instruments.

4) Internal memory and timer function

The XLN series provides a memory space for storage and retrieval of 10 instrument settings. The instruments provide one (1) timer with the resolution of 1 second. The timers are used to time the outputs. When the timer counts down to zero the power supply will automatically turn the output off. This feature is useful when the supply is providing power to the test object in a burn-in room where operators can precisely set the time when the equipment is to shut off.

5) OVP (over voltage protection), OCP (over current protection) and OPP (over power protection) and key lock functions

The over voltage protection (OVP), over current protection (OCP) and over power protection (OPP) features limit the maximum output current and voltage to avoid damages to the unit under test (UUT). The key lock feature disables all keys except the CLR key. It prevents damaging the

ManualsPlus.com

UUT by accidentally entering the wrong settings.

6) Series & parallel connection mode

The series-parallel connection mode of two or more units (maximum to 4 units) significantly increases the combined output power to a maximum of 5760 W. In parallel connection mode of four XLN3640 the maximum output is 36 V/160 A; and in series connection mode of four XLN10014, the maximum output is 400 V/14.4 A.

7) Multi-unit connection mode

The RS 485 interface can be used to connect multiple power supplies in series, up to maximum of 30 units. They can be controlled via USB interface with a computer.

ManualsPlus.com

1.3 Specifications

XLN3640/XLN6024 Specifications		
Output Rating	XLN3640	XLN6024
Output Voltage	0--36 V	0--60 V
Output Current	0--40 A	0--24 A
Output Power	1440 W	1440 W
Output Protection		
OVP Adjustment Range	2--38 V	3--64 V
OVP Accuracy	200 mV	300 mV
Line Regulation		
Voltage	≤ 4 mV	≤ 6 mV
Current	≤ 4 mA	≤ 4 mA
Load Regulation		
Voltage	≤ 8 mV	≤ 8 mV
Current	≤ 8 mA	≤ 7 mA
Ripple/Noise (20Hz-20MHz)		
Normal Mode Voltage (≥ 0.5 % of max. power)	≤ 5 mVrms/≤ 60 mVpp	≤ 6 mVrms/≤ 70 mVpp
Normal Mode Current	≤ 90 mA	≤ 70 mA
Programming Resolution		
Programming	1 mV/1 mA	1.5 mV/1 mA
Readback	1 mV/1 mA	1.5 mV/1 mA
Programming Accuracy (% output+offset)		
Voltage	0.05 %+10 mV	0.05 %+15 mV
Current	0.05 %+10 mA	0.05 %+18 mA
Readback Accuracy (% output+offset)		
Voltage	0.05 %+10 mV	0.05 %+15 mV
Current	0.05 %+10 mA	0.05 %+18 mA

ManualsPlus.com

General		
Average Command Response Time	≤50 ms	≤50 ms
Power Factor Correction	0.99 (Full load)	0.99 (Full load)
Remote Sense Compensation	2V	2V
Rising Time at Full Load	≤ 15 ms	≤ 20 ms
Rising Time at No Load	≤ 15 ms	≤ 20 ms
Falling Time at Full Load	≤ 15 ms	≤ 20 ms
Falling Time at No Load	≤ 1000 ms	≤ 1000 ms
Standard Interface	USB	
Transient Response Time	≤ 1 ms	
Efficiency	80 %	
AC Line Rated Input Voltage	100--240 VAC (Full load)	
Tolerance/Variation in Voltage	-15% -- +10% (10% power de-rating mode when voltage under 95 VAC)	
Rated Frequency	47 Hz--63 Hz	
Maximum Rated Input Power	1700 VA	
Temperature Ratings(O)	Operation (0 °C -- 40 °C)	
Temperature Ratings(S)	Storage (-10 °C -- 70 °C)	
Dimensions(W*H*D)	16.5 x 1.7 x 17 inch(420 x 43.6 x 432 mm)	
Weight	19.8 lbs. (9 kg)	
Standard Accessories	Power Cord, Terminal Blocks for Rapid Plug Connector, Rackmount Kit, Manual	
Standard Interface	USB	
Optional Interface	LAN & GPIB	

ManualsPlus.com

XLN8018/XLN10014 Specifications		
Output Rate	XLN8018	XLN10014
Output Voltage	0～80 V	0～100 V
Output Current	0～18 A	0～14.4 A
Output Power	1440 W	1440 W
Output Protection		
OVP Adjustment Range	4～85 V	5～105 V
OVP Accuracy	400 mV	500 mV
Line Regulation		
Voltage	≤ 8 mV	≤ 10 mV
Current	≤ 4 mA	≤ 4 mA
Load Regulation		
Voltage	≤ 10 mV	≤ 12 mV
Current	≤ 6.5 mA	≤ 6 mA
Ripple/Noise (20Hz-20MHz)		
Normal Mode Voltage (≥ 0.5 % of max. power)	≤ 7 mVrms/≤ 80 mVpp	≤ 8 mVrms/≤ 80 mVpp
Normal Mode Current	≤ 50 mA	≤ 40 mA
Programming Resolution		
Programming	2 mV/1 mA	2.5 mV/1 mA
Readback	2 mV/1 mA	2.5 mV/1 mA
Programming Accuracy (% output+offset)		
Voltage	0.05 %+20 mV	0.05 %+25 mV
Current	0.05 %+7 mA	0.05 %+6 mA
Readback Accuracy (% output+offset)		
Voltage	0.05 %+20 mV	0.05 %+25 mV
Current	0.05 %+7 mA	0.05 %+6 mA
General		

ManualsPlus.com

Average Command Response Time	≤50 ms	≤50 ms
Power Factor Correction	≥ 0.99 (Full load)	≥ 0.99 (Full load)
Remote Sense Compensation	2 V	2 V
Rising Time at Full Load	≤ 25 ms	≤ 30 ms
Rising Time at No Load	≤ 25 ms	≤ 30 ms
Falling Time at Full Load	≤ 25 ms	≤ 30 ms
Falling Time at No Load	≤ 1000 ms	≤ 1000 ms
Transient Response Time	≤ 1 ms	
Efficiency	≥ 80 %	
AC Line Rated Input Voltage	100～240 VAC (Full load)	
Tolerance/Variation in Voltage	-15 %～+10 % (10 % power de-rating mode when voltage under 95 VAC)	
Rated Frequency	47 Hz～63 Hz	
Maximum Rated Input Power	1700 VA	
Temperature Ratings(O)	Operation (0 °C -- 40 °C)	
Temperature Ratings(S)	Storage (-10 °C -- 70 °C)	
Dimensions(W*H*D)	16.5 x 1.7 x 17 inch (420 x 43.6 x 432 mm)	
Weight	19.8 lbs. (9 kg)	
Standard Accessories	Power Cord, Terminal Blocks for Rapid Plug Connector, Rackmount Kit, Manual	
Standard Interface	USB	
Option Interface	LAN & GPIB	

Specifications and information is subject to change without notice

ManualsPlus.com

Features of models XLN3640/XLN6024/XLN8018/XLN10014:

- Graphical, easy to read LCD display
- Compact, high efficiency and power density
- 40 A output connector for quick connectivity
- Convenient numerical & function keys
- Store and recall 10 instrument settings
- Timer (1 sec -- 100 hours)
- Programmable (SCPI command only)
- List mode supports up to 10 sets of program and maximum 150 steps in total
- Auxiliary 5 V/1 A output
- Built-in precise voltage and current measurement
- OVP, OCP, OPP and key-lock function
- Series & parallel connection setup (up to 4)
- Multi-unit connection mode via RS485 interface allows connection of up to 30 power supplies.
- Average measuring time per measurement is 50 ms
- Standard USB interface
- Optional interfaces: GPIB, LAN (order models XLN3640-GL, XLN6024-GL, XLN8018-GL, XLN10014-GL)

ManualsPlus.com

2. Cautions Before Using

2.1 Check and Confirm Accessories before Using

After receiving this product, please verify the items received in accordance with the ones listed below:

1. The appearance of the products is without scratch or other damages.
2. Standard parts as shown in parts list of section 8.

2.2 Operation Instructions

In order to avoid damaging the instrument due to improper operation, be sure to read this user manual. To maintain the specified accuracy, factory calibration should be performed annually.

2.3 Ambient Environment

1. Do not locate or operate this product in an environment with dust, vibration, or corrosive gas and do not expose this product directly to the sunlight. Operate it in an environment with temperature 0--40°C & relative humidity 20%--80%. Pause the operation when ambient temperature is over 40°C; undo the operation only after the ambient temperatures drops to the acceptable temperature range. Operating temperature over the above range would damage the instrument.
2. This product is equipped with one blow-out type cooling fan on the back board and three in-take cooling fans on inner side of front board. Provide room for good ventilation near the cooling fans and keep the boards with a space above 10cm away from wall. To maintain good accuracy, do not block the ventilation holes in the front and the rear parts of the unit.
3. Although the product is designed with filters to minimize noise from AC power source, it is recommended that it be operated in a low power noise environment with proper earth ground. If the power noise is unavoidable, please install a power filter.

ManualsPlus.com

2.4 Storage

The storage temperature range of this product is within -10ºC - 70ºC and R.H. should be within 80% without moisture condensing. If not operating this product for a long time interval, pack it with original packaging or similar one and put it in a dry place without exposure to direct sunlight.

2.5 Power-line voltage

Rated AC power source connected to this product is within 100 V-240 V (refer to the Product Specification for details). Before connecting to external power source, be sure that the power switch is in OFF state and verify the suitability of power cable (including the extension line). It should be compatible with the rated voltage/current and should be firmly connected.

Warning:

The power cable attached with this product is certified for safety. To change a cable or add an extension cable, be sure that it can meet the required power ratings of this product. Any misuse with an additional cable would void the warranty of this product.

2.6 Fuses

This product is a switching mode power supply. The fuse installed inside is a multi-barrier protection hardware design. It should not break under normal operation. In case the fuse does melt, it indicates another malfunction that causes the fuse to break. In this case, it is suggested to send this product back to service.

Warning:

Any disassembling of the casing or changing the fuse not performed by an authorized service technician will void the warranty of the instrument.

ManualsPlus.com

2.7 Warm-up Time

The XLN series is fully operable upon switching the power on. However, to reach the specified equipment accuracy, please allow the supply to warm up for at least 30 minutes.

2.8 Power-off procedure

When the supply is not in use, be sure to turn the power switch on the panel to the OFF position to turn off the power. After the power switch is turned to the OFF position, the inner fans will still run for approximately 10-15 seconds to carry on the inside electric capacitor discharge process per safety code requirement. Once the discharge process is complete, this product will carry out the automatic shut-down process

2.9 Cautions in Operation

A. While connected in series, each power supplies should be in power-on state and output should be "ON". In case there is any one supply that is in power-off state or output is "OFF", the associated output current will flow over the output bypass diode of the power-off unit and burn it out.

B. While in parallel connection mode, the output voltage of each power supplies should be set to equal values. If the setting value of each unit is not the same, the higher output voltage will feed back to the smaller unit and destroy its inner parts.

C. When the AC input voltage is lower than the full-load voltage which is 100 VAC, the supplies will activate an inner over temperature protector and cut off the output in response to the condition. To ensure that the entire test process can be complete smoothly, confirm that the input AC voltage is within the specified range.

ManualsPlus.com

3. Front Panel Operation

3.1 XLN3640/XLN6024/XLN8018/XLN10014 Panel

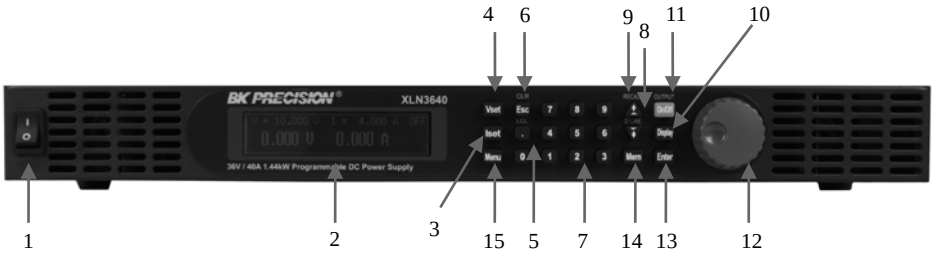

3.1.1 Front Panel

(1) Power switch:

Please consult the “Cautions before use” section before turning on power switch.

(2) Display:

192x32 Graphic LCD Module

(3) Current setting (Iset):

Press (Iset) to set up the current limit.

(4) Voltage setting (Vset):

Press (Vset) to set up the output voltage.

(5) Dot/Local (•):

This button is applied as a decimal point. Or push this button after entering REMOTE online state to revert back to LOCAL mode (unit-operation mode). Or press this button to release after entering LOCK mode.

ManualsPlus.com

(6) ESC/CLR (Esc):

Press this button to clean up numerical setting or jump to the previous screen.

(7) Numerical keys (0) - (9):

They are used to directly input the voltage or current value or choose the setting option in Menu screen.

(8) Down/Right/Store (↓):

This key is a multi-function key for the following three functions:

Down: In "Menu Setting" status, use this "Down" key to move cursor to the next item.

Right: Under "Output" status, use this key to move cursor right.

Store: Under Memory Setting status, use this key to store setting to the selected memory set.

(9) Up/Left/Recall (↑):

This key is a multi-function key for the following three functions:

Up: In "Menu Setting" status, use this "Down" key to move cursor to the up item.

Left: Under "Output" status, use this key to move cursor left.

Recall: Under Memory Setting status, use this key to recall setting from the selected memory set.

(10) Display (Display):

In "Menu Setting", press (Display) to return to main screen or toggle the display to show voltage and current or power and load resistance as shown below:

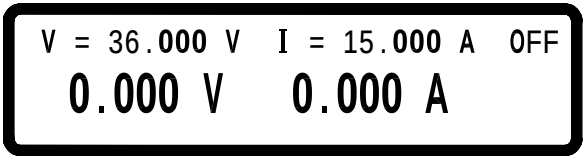

ManualsPlus.com

```
V = 36.000 V   I = 15.000 A   OFF
   0.00 W      0.0 Ω
```

(11) Output (On/Off):

Control the On/Off of the output power.

(12) The rotary knob:

Use this knob to adjust voltage or current (press (Enter) first to let cursor display first). This is adjustable when output is ON.

(13) Enter (Enter):

This key is the confirmation key of current or voltage setting value; or press (Enter) under output status to dynamically adjust voltage (at CV mode) or current (at CC mode).

(14) Mem (Mem):

Press this key to enter access the storage memory. Users can then use the numerical key or knob to select the target memory set to save or recall the configuration by pressing the STORE or RECALL key. Ten sets are available in selection.

```
MEM = 0                    OFF
 0.000 V    0.000 A
```

(15) Menu (Menu):

Use this key to enter system parameter settings. There are eight (8) major items under operation. Users may press (↑), (↓) to scroll through the menu list or the numerical keys to enter the corresponding item number in the menu list.

ManualsPlus.com

```
1 . SYSTEM SETTING
2 . OUTPUT SETTING
3 . PROTECTION                ▼
```

```
4.SERIES/PARALLEL             ▲
5.INFORMATION
6.SPECIAL TEST FUNC           ▼
```

```
7 . TIMER CONTROL             ▲
8 . CALIBRATION
9 . CHAIN SETTING
```

1. SYSTEM SETTING:

Pressing (1) key in the first page of Menu Setting will enter the following "SYSTEM SETTING" menu.

```
REMOTE CONTROL= USB
GPIB ADDRESS  =  1
EXTERN CONTROL= OFF           ▼
```

REMOTE CONTROL: Choose the remote interface (USB/GPIB/ETHERNET)

*GPIB and ETHERNET available only with on models with "-GL" suffix

*USB control requires installing USB drivers first. Download USB driver from www.bkprecision.com

***USB interface is a virtual COM port. The settings are:**

Baudrate : 57600 bps

ManualsPlus.com

Data bit : **8**

Parity check : **none**

Stop bit : **1**

*When entering the Remote mode, screen will present RMT indicator as shown in the following picture.

```
V = 36.000 V   I = 15.000 A   OFF
 0.000 V    0.000 A            RMT
```

GPIB ADDRESS: Set up GPIB ADDRESS (1-30)

EXTERN CONTROL: Set up the external control to voltage control (VOLT 0-10 V or 0-5 V), resistance control (RES 0-5K) or off (OFF).

```
IP CONFIG     = STATIC          ▲
IP ADDRESS    = 255.255.255.255
KEY LOCK      = OFF             ▼
```

IP CONFIG: **STATIC :** User can input IP address

IP ADDRESS: If IP CONFIG is set to STATIC, users can enter a static IP address here.

Note: If you are not sure of the IP settings, consult your network administrator.

KEY LOCK: While exiting the setting screen after enable KEY LOCK, all keys except the [•] key are locked. Only this key can disable KEY LOCK.

*Simultaneously pressing both [↑] and [↓] keys in the main screen can also lock keys.

*While entering KEY LOCK state, screen will present LCK indicator in the bottom right corner.

ManualsPlus.com

```
BEEP            = ON          ▲
LCD BACKLIT     = ALWAYS ON
RECALL DEFAULT= NO            ▼
```

BEEP: Turns the Buzzer ON/OFF

LCD BACKLIT: Set the backlight of the LCD to Always ON or OFF after 1/5/10/30 minutes

RECALL DEFAULT: Restores the manufacturer default settings

```
EXT 5V OUTPUT   = OFF         ▲
POWER ON STATE = OFF
V=  0.000 V,I=  0.000 A,O= OFF
```

Ext 5V OUTPUT: Turns the extra 5V power output (on the rear panel) ON/OFF.

POWER ON STATE: Users can set the output state of the supply when powered on. When OFF is selected, the XLN series will do nothing after power on. If LAST is selected, then at power on the supply will use the last setting before it turned off previously. If USER (user defined) is selected, a prompt will ask for setting output voltage, current, and output state. Once set, these values are then used the next time the supply is powered on.

```
HOT KEY         = OFF
```

HOT KEY: Set the HOT KEY function ON/OFF. If the HOT KEY function is ON, user can use 0 – 9 number keys to recall the voltage and current

ManualsPlus.com

setting values stored inside internal memory.

*If entering the HOT KEY mode, screen will indicate HOT symbol as shown in the following illustration.

```
V = 36.000 V   I = 40.000 A   OFF
 0.000 V    0.000 A           HOT
```

2. OUTPUT SETTING:

Press (2) in the first page of Menu Setting to enter OUTPUT SETTING menu.

```
VOLT LIMIT MAX   =   60.500 V
CURR LIMIT MAX   =   24.500 A
VOLT LIMIT MIN   =    0.000 V
```

```
CURR LIMIT MIN   =    0.010 A
VOLT SLEW RATE   =   3.0000 V/mS
CURR SLEW RATE   =   1.2000 A/mS
```

```
CONNECTOR DROP  =  DISABLE
EXT  FULL  VOLT    =  10  V
```

VOLT LIMIT: Upper limit of the output voltage setting

CURR LIMIT: Upper limit of the output current setting

VOLT SLEW RATE: Voltage ascending/descending slope

(XLN3640: 0.01 - 2.4V/ms)

(XLN 6024:0.01 - 3V/ms)

(XLN 8018:0.01 - 3.2V/ms

(XLN 10014:0.01 - 3.3V/ms)

ManualsPlus.com

CURR SLEW RATE: Current ascending/descending slope
(XLN 3640:0.01 - 2.5A/ms)
(XLN 6024:0.01 - 1.2A/ms)
(XLN 8018:0.01 - 0.72A/ms
(XLN 10014:0.01 - 0.48A/ms)

CONNECTOR DROP: Turns on/off the connector drop calibration function

EXT FULL VOLT: External voltage control full-scale setting. Select between 10 V or 5 V for full-scale control.

3. PROTECTION SETTING (PROTECTION)

Press (3) key in the first screen of "Menu Setting" to enter PROTECTION menu.

```
OVP = OFF        SET =     38.000 V
OCP = OFF        SET =     42.000 A
OPP = OFF        SET = 1440.000 W ▼
```

OVP: turns on/off the overvoltage protection

SET: set up the overvoltage protecting point.

OCP: turns on/off the overcurrent protection

SET: set up the overcurrent protecting point.

OPP: turns on/off the overpower protection

SET: set up the overpower protecting point.

```
CV TO CC= OFF    ▲
CC TO CV= OFF
```

CV TO CC: Enable/disable the protection of the change

ManualsPlus.com

from CV to CC mode

CC TO CV: Enable/disable the protection of the change from CC to CV mode

4. SERIES/PARALLEL SETTING

Press (4) in the second screen of Menu Setting to enter SERIES/PARALLEL menu.

```
SELECT MODE   = OFF
MASTER/SLAVE  = MASTER
```

SELECT MODE: **Choose series or parallel operation mode.**

MASTER/SLAVE: Refer to "Series/Parallel Setting" section for the detailed setting procedure of MASTER/SLAVE mode.

5. INFORMATION

Press (5) in the second screen of "Menu Setting" to enter INFORMATION screen.

```
BK PRECISION        XLN3640
PROGRAMMABLE DC POWER SUPPLY
F/W VERSION    :  1.13
```

6. SPECIAL TEST FUNCTION

Press (6) in the second screen of "Menu Setting" to enter SPECIAL TEST FUNCTION menu.

```
1. CURRENT COUNTER TEST
2. PROGRAM MODE
3. MEASURE AVERAGE
```

ManualsPlus.com

6.1 CURRENT COUNTER TEST: Press (1) to enter the CURRENT COUNTER TEST screen.

```
V= 10.00V I= 1.00A Ib= 0.00A OFF
  00 : 00 : 000.0 ms
```

Refer to “Current Counting” section for the detailed setting procedure.

6.2 PROGRAM MODE: Press (2) to enter the PROGRAM MODE menu.

```
PROGRAM NUMBER =  1
        PROGRAM OFF
```

Before running the program, user needs to input the programmed values through the USB or GPIB interface into the power supplies. Users may save up to 10 programs (program number 1 through 10) inside the memory and recall them in this Program Mode screen by selecting the program number and then pressing (On/Off) to execute the program.

6.3 MEASURE AVERAGE: Press (3) to enter the MEASURE AVERAGE page.

```
AVERAGE TIME  =  2
```

AVERAGE TIME: Set the average measure time.

7. TIMER CONTROL

ManualsPlus.com

Press (7) in the third page of Menu Setting to enter TIMER CONTROL screen.

```
TIMER = OFF
TIME =   0 Hr   0 Min   0 Sec
```

TIMER: Turn on/off TIMER function.

TIME: Set up OUTPUT ON time (Max:999Hr 59Min 59Sec)

8. CALIBRATION

Press (8) in the third page of "Menu Setting" to enter CALIBRATION menu. Users must enter the password to access calibration mode.

```
PLEASE KEYIN PASSWORD:_
```

8.1 Equipment Requirements

1. 5 ½ Digital Volt meter.
2. Shunt for current calibration (100 A/ 10 mΩ)

8.2 Calibration Procedure

<u>VOLTAGE CALIBRATION</u>

A. Connect power supply output terminal to DVM (as shown in Figure 1 below). Turn on the supply. Once the unit enters the main page, press MENU and select "8. Calibration" and key in

ManualsPlus.com

password “13579” to enter the following calibration menu screen:

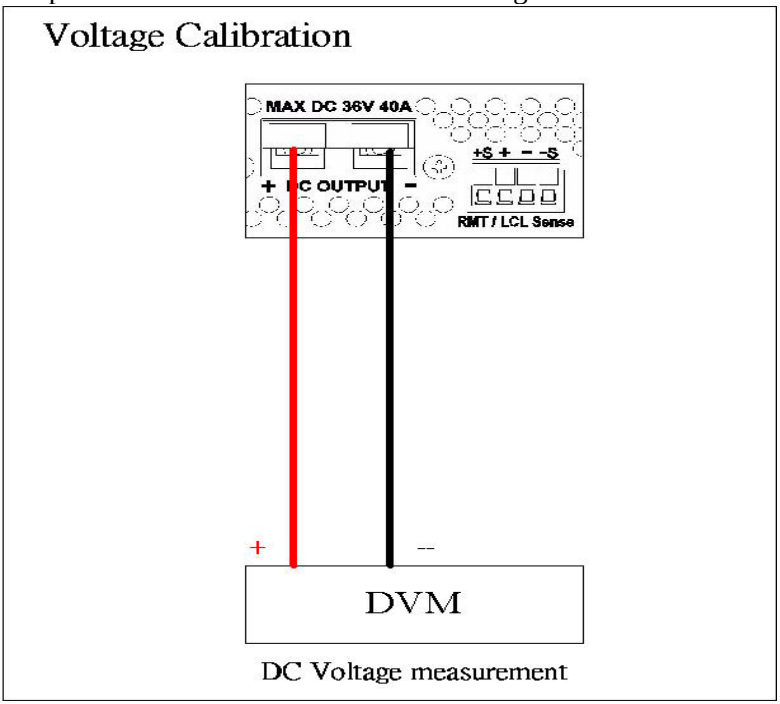

Figure 1

```
1.VOLTAGE CALIBRATION
2.OVP CALIBRATION
3.CURRENT CALIBRATION          ▼
```

B. Press “1” to access Voltage Calibration Procedure.

C.

```
CALIB VOLT Lo  =  1.8640 V
CALIB VOLT MIDL= 12.5540 V
CALIB VOLT MIDH= 25 1140 V
```

ManualsPlus.com

```
CALIB VOLT Hi   = 35.7800 V
```

D. According to voltage value displayed on DVM, fill in the values for their corresponding functions and press ENTER. If any DVM read-back value at each voltage function does not fit with the following table below, please inspect the hardware.

XLN3640

Function	Setting Value	Range of Read-Back Value
Lo	1.8V	1.5 - 2.0 V
MIDL	12V	10 - 13 V
MIDH	24V	21 - 25 V
Hi	32.4V	31 - 34 V

XLN6024

Function	Setting Value	Range of Read-Back Value
Lo	3V	2.4 - 3.6 V
MIDL	20V	18 - 22 V
MIDH	40V	36 - 44 V
Hi	57V	53 - 61 V

XLN8018

Function	Setting Value	Range of Read-Back Value
Lo	4V	3.6 - 4.4 V
MIDL	26V	23.5 - 28.5 V

ManualsPlus.com

MIDH	53V	48 - 58 V
Hi	76V	69 - 83 V

XLN10014

Function	Setting Value	Range of Read-Back Value
Lo	5V	4.5 - 5.5 V
MIDL	33V	29.7 - 36.3 V
MIDH	66V	59 - 72 V
Hi	95V	85 - 104 V

E. When pressing ENTER at Hi function, and the calibration data values will be stored in FLASH and unit will return to calibration main screen.

OVP CALIBRATION

A. Press 2 in the calibration main page to enter OVP calibration page.

```
CALIB OVP Lo = ▶ Start
CALIB OVP Hi =
```

B. Press ENTER to access OVP calibration procedure at Low function.

ManualsPlus.com

```
CALIB OVP Lo = ▶ Calibrating...
CALIB OVP Hi =
```

C. Jump to Hi function when completed.

```
CALIB OVP Lo = ▶ OK
CALIB OVP Hi = ▶ Start
```

D. Press ENTER to access OVP calibration procedure at High function.

E.

```
CALIB OVP Lo = ▶ OK
CALIB OVP Hi = ▶ Calibrating...
```

F. After completing the above steps, calibration value will be stored in FLASH and unit will return to the calibration main screen.

G. If calibration is not completed in 10 seconds after starting, please inspect OVP circuit.

CURRENT CALIBRATION

A. Connect two output terminals of the power supply to two ends of the current shunt, and connect DVM to the sensor of current shunt to measure DC voltage as shown Figure 2. Press 3 to enter current calibration screen.

B. First, input parameter (resistance of current shunt, mΩ) of current

ManualsPlus.com

measurement fixture. According to voltage value shown on DVM, fill in that value that corresponds to the function and press ENTER key.

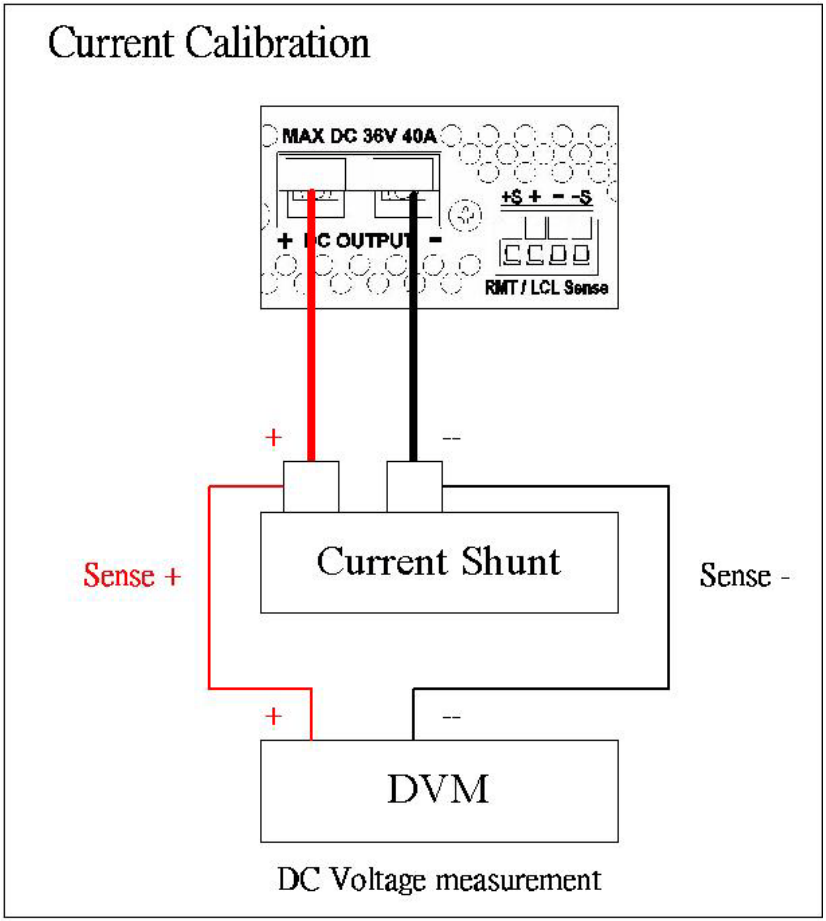

Figure 2

```
FIX. PARAMETER =  10.000
CALIB CURR Lo  =   1.000 mV
CALIB CURR MIDL= 130.000 mV
```

ManualsPlus.com

```
CALIB CURR MIDH =   258.246 mV
CALIB CURR Hi   =   377.559 mV
```

C. Please inspect the hardware if the current value is inconsistent with the value in the tolerance error table below after the calibration values of each function is changed to actual current value.

XLN3640

Function	Setting	Range of Transformation Value
Lo	0.1A	0 - 0.5 A
MIDL	13A	11 - 14 A
MIDH	26A	23 - 27 A
Hi	38A	34 - 39 A

XLN6024

Function	Setting	Range of Transformation Value
Lo	0.06A	0 - 0.5 A
MIDL	7.8A	6.6 - 9 A
MIDH	15.6A	14 - 17.2 A
Hi	22.8A	21 - 24.6 A

XLN8018

Function	Setting	Range of Transformation Value
Lo	0.045A	0 - 0.1 A
MIDL	5.9A	5.3 - 6.5 A
MIDH	12A	10.8 - 13.2 A
Hi	17A	15.3 - 18.7 A

ManualsPlus.com

XLN10014

Function	Setting	Range of Transformation Value
Lo	0.03625A	0 - 0.1 A
MIDL	4.7A	4.2 - 5.2 A
MIDH	9.5A	8.55 - 10.45 A
Hi	13.7A	12.33 - 15.07 A

D. The calibration value will be stored in FLASH after pressing ENTER at Hi function.

9. Series Connection Control Setting (CHAIN)

Press (9) in Menu setting page to enter CHAIN SETTING page.

```
CHAIN ON/OFF  = OFF
CHAIN ADDRESS =  1
```

CHAIN ON/OFF : **On/Off Series Connection Mode**

CHAIN ADDRESS : **Setting Address (1 – 30)**

For the detailed setting information, please refer to **“**SERIES CONNECTION FUNCTION” section**.**

ManualsPlus.com

3.1.2 Rear Panel

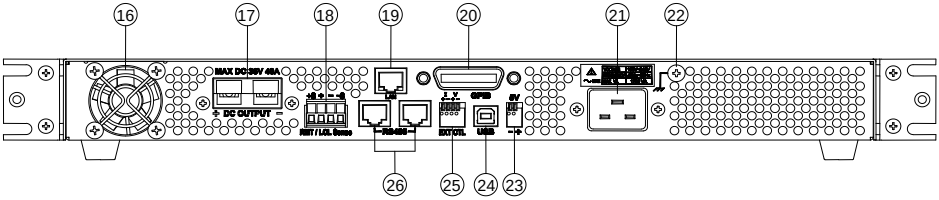

Cooling fans:

The supply automatically adjusts fan's rpm according to the load condition.

(16) Cooling fan:

The rear cooling fan speed is temperature control.

(17) Power output terminal:

Please pay attention to the correct polarities when making connection.

(18) RMT/LCL Sense:

When Remote sense is selected, the wire connection can be setup as follows (shown in the figure below): positive sense (+S) and positive lead (+) of the DC output are connected to the positive end (+) of the device, whereas negative sense (-S) and negative lead (-) of the DC output are connected to the negative end (-) of the device under test. This connection will compensate the voltage dropped due to current flow through long power wires (the maximum compensation voltage is 2 V).

ManualsPlus.com

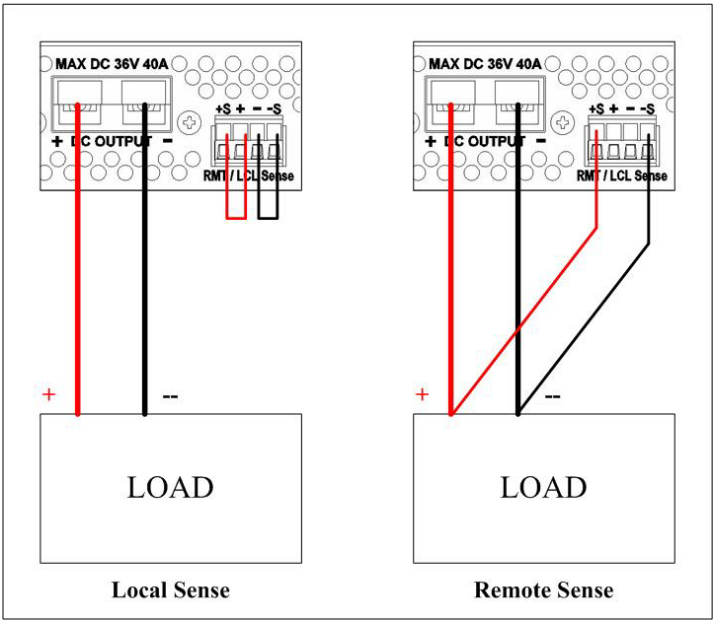

When Local sense is selected, the wire connection can be setup as follows (shown in the figure above):positive sense (+S) is connected to the positive lead (+) and negative sense (-S) is connected to the negative lead (-), whereas the positive lead (+) of the DC output is connected to the positive end (+) of the device and the negative lead (-) of the DC output is connected to the negative end (-) of the device under test. When this sensing mode is selected, the power wires from the DC output leads to the device under test should be as short as possible.

(19) LAN (optional):

The ETHERNET interface connector

(20) GPIB (optional):

The GPIB interface connector

(21) AC power input:

The power receptacle is for a power source within 100 VAC - 240 VAC.

(22) Earth connection:

Used for earth ground connection.

ManualsPlus.com

(23) 5V/1A Output:

XLN series offers an extra output with a constant output voltage of 5 V and the maximum output current of 1 A. This extra power supply can be switched on or off under the “System Setting” menu.

(24) USB :

USB interface connector.

(25) EXT CTL:

Models XLN3640/XLN6024/XLN8018/XLN10014 offer the capability of setting the output voltage/current by adjusting an external input voltage/resistance. The range of the external input voltage is 0 - 10 VDC or 0 - 5 VDC, which corresponds to the output voltage of 0 - 36 V for XLN3640, 0 - 60 V for XLN6024, 0 - 80 V for XLN8018, and 0 - 100 V for XLN10014 and corresponding to the output current of 0 - 40 A for XLN3640, 0 - 24 A for XLN6024, 0 - 18 A for XLN8018, and 0 - 14.4 A for XLN10014. The range of the external resistance is 0 - 5 K ohm which corresponds to the output voltage of 0 - 36 V for XLN3640, 0 - 60V for XLN6024, 0 - 80 V for XLN8018, and 0 - 100 V for XLN10014 and corresponding to the output current of 0 - 40 A for XLN3640, 0 - 24 A for XLN6024, 0 - 18 A for XLN8018, and 0 - 14.4 A for XLN10014.

(26) RS485:

While in series or parallel connection or multi-unit series connection (CHAIN), RS485 interface can be used for communication and synchronization between master and slave.

(27) Protection cover of the RMT/LCL Sense connector (XLN6024/XLN8018/XLN10014):

WARNING:

When the RMT/LCL Sense is not activated and/or not used, the protection cover must be covered. To prevent electric shock, do not dissemble this protective cover.

(28) Protection cover of the output leads (XLN6024/XLN8018/XLN10014):

ManualsPlus.com

WARNING:

This PRODUCT is designed meeting safety code and has passed the related qualification test. In case no output cable is connected, close the protection cover and fasten the screws in so as to protect user from electric shock or other hazards.

ManualsPlus.com

4. Operation Instructions

4.1 Voltage Setting

Press (Vset) and set the output voltage by pressing the numerical keys directly, and then press (Enter) to confirm the setting.

```
V =_        V  I = 15.000 A  OFF
 0.000 V   0.000 A
```

4.2 Current Setting

Press (Iset) and set the output current by pressing the numerical keys directly and then press (Enter) to confirm the setting.

```
V = 36.000 V  I =_        A  OFF
 0.000 V   0.000 A
```

4.3 Over-voltage Protection OVP

Press (Menu) to enter the Configuration menu and press (3) to enter the PROTECTION setting menu. Then, using the knob set OVP to ON and press (Enter) to confirm it. Now the cursor will move to the value setting for the OVP on the right hand side. Enter the OVP value here by pressing the numerical keys.

```
OVP = ON     SET =   38.000 V
OCP = OFF    SET =   42.000 A
OPP = OFF    SET = 1440.000 W ▼
```

4.4 Over-current Protection OCP

Press (Menu) to enter the “Configuration” menu and press (3) to enter the PROTECTION setting screen. Then, use the knob to set OCP to ON and press

ManualsPlus.com

(Enter) to confirm it. Now the cursor will move to the value setting for the OCP on the right hand side. Enter the OCP value by pressing the numerical keys.

```
OVP = ON      SET =   38.000 V
OCP = ON      SET =   42.000 A
OPP = OFF     SET = 1440.000 W ▼
```

4.5 Voltage Output

After the voltage, current and protection settings are entered, press (On/Off) to output voltage. User will be able to recognize the setting values and the actual output values from the LCD.

```
V = 36.000 V  I = 15.000 A   CV
35.999 V   0.000 A
```

4.6 Control Voltage Output with Rotary knob

When the output is ON, user may still increase or decrease the output voltage by turning the rotary knob. The procedure is: press (Enter) and cursor appears in response; press (↑) or (↓) to move the cursor to the digit you want to change and turn the knob to increase or decrease the output voltage value at the cursor. The changes of the voltage setting and the output voltage can be observed.

```
V = 36.000 V  I = 15.000 A   CV
35.999 V   0.000 A
```

4.7 Timer Function

When the “Timer Setting” function is ON, it will activate the timer. After timer setting is made, return to the main screen. After setting up the output current & voltage and press (On/Off) to output, the screen will show the

ManualsPlus.com

countdown of the timer. Once it reaches down to zero, the supply will turn off the output automatically.

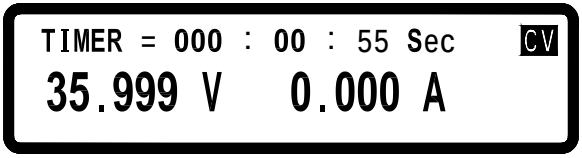

4.8 Series (cascade) / Parallel Mode Setting

The XLN3640/XLN6024/XLN8018/XLN10014 uses the series/parallel mode (4 supplies maximum) to increase the output power capability. By connecting 4 instruments in parallel, the combined unit can offer 36 V/160 A power output. By connecting 4 XLN10014 units in series, the combined supply can output 400 V/14.4 A. Note that you cannot perform both parallel and series mode at the same time. Series connection will be off once series (cascade) / parallel connection function is turned on.

4.8.1 Parallel Connection Setting

While connecting four sets of XLN3640/XLN6024/XLN8018/XLN10014 in parallel, the wiring should be setup like the following:

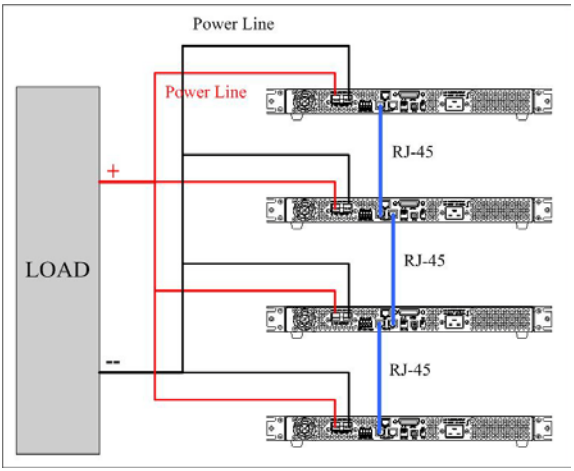

After wiring is complete, configure one XLN3640 / XLN6024 / XLN8018 / XLN10014 as the Master and the other three are Slave A, B and C. After one of the supplies is configured to be the Master, it will start searching for all Slaves

ManualsPlus.com

that are connected to the Master. Therefore, in order to correctly configure the correctly, user must set up the Slaves before the Master is set.

To set a XLN3640/XLN6024/XLN8018/XLN10014 to slave mode, press (Menu), (↓), and (4) in the main screen to enter the series/parallel setting option. And then select the parallel mode by turning the knob (SCPI command is "PS:MODE PARALLEL") and then press (Enter) to confirm. It will continue to the next line for the MASTER/SLAVE selection. Turning the knob to select SLAVE A (SCPI command is "PS:TYPE SLAVEA") for the supply and press (Enter) to confirm the setting. Using the same procedure, setup SLAVE B and C for another two (2) supplies as shown below.

```
SELECT MODE   = PARALLEL
MASTER/SLAVE  = SLAVE A
```

To set the master unit, press (Menu), (↓), **and** (4) in the main screen to enter the series/parallel setting option. And then use the knob to select the parallel mode (SCPI command is "PS:MODE PARALLEL") and press (Enter) to confirm. It will continue to the next line for the MASTER/SLAVE selection. Use knob again to select MASTER (SCPI command is "PS:TYPE MASTER") and then press (Enter) to confirm. After it is confirmed as the Master the XLN3640/XLN6024/XLN8018/XLN10014 will start searching for all Slaves, as shown below:

```
SELECT MODE   = PARALLEL
MASTER/SLAVE  = MASTER
CHECKING FOR SLAVE...
```

If wiring is correct, screen will appear as:

```
SELECT MODE   = PARALLEL
MASTER/SLAVE  = MASTER
FOUND SLAVE : A B C
```

ManualsPlus.com

After receiving the control command from the Master, all Slaves will be locked on to the SLAVE screen. At this point all keys except [•] are locked so that slaves cannot be operated by front keys except controlled by the Master as shown below:

```
MODE : PARALLEL  ERR : NONE
SLAVE A
```

Once the Master and Slave settings are done, users can then operate the Master only to set up the combined output voltage and current of the complete system.

To release from this operation mode (parallel operation mode in this example), press [•] (LCL) to access to the series/parallel setting screen and turn the knob to select OFF for series/parallel selection to disable the series or parallel operation mode and return to the local operation mode so that the XLN3640/XLN6024/XLN8018/XLN10014 can be controlled by press the front keys again. Do not change the operation mode while XLN3640/XLN6024/XLN8018/XLN10014 is in their output states or there will be a Master's communication failure and an error message will be displayed. After power-off, if you want to keep the previous series/parallel setting, please turn on the Slave first. Then turn on the Master.

4.8.2 Series Mode Setting

While connecting four sets of XLN3640/XLN6024/XLN8018/XLN10014 in series, the wiring setup should be configured as shown:

ManualsPlus.com

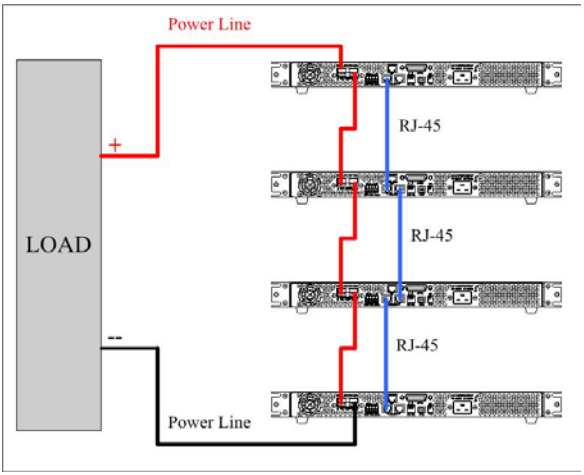

After wiring is complete, configure one supply as the Master and the other three as the Slave A, B, and C. After the power supply is configured as Master, it will start searching for all Slaves that are connected to the Master. Therefore, in order to setup correctly, user must set up the Slaves before the Master is set.
To set a XLN3640/XLN6024/XLN8018/XLN10014 to the slave mode, press (Menu), (↓), and (4) in the main screen to enter the series/parallel setting option. Then select the SERIES mode by turning the knob (SCPI command is "PS:MODE SERIES") and then press (Enter) to confirm. It will continue to the next line for the MASTER/SLAVE selection. Turn the knob to select SLAVE A (SCPI command is "PS:TYPE SLAVEA") for the instrument and press (Enter) to confirm the setting. Using the same procedure to set up SLAVE B and C for the other two supplies.

```
SELECT MODE   = SERIES
MASTER/SLAVE = SLAVE A
```

To set the master unit, press (Menu), (↓), and (4) in the main screen to enter the series/parallel setting option. Then use the knob to select the series mode (SCPI command is "PS:MODE SERIES") and press (Enter) to confirm. It will continue to the next line for the MASTER/SLAVE selection. Use knob again to select MASTER (SCPI command is "PS:TYPE MASTER") and then press (Enter) to confirm. After confirming the supply as the Master, it will

ManualsPlus.com

start searching for all Slaves, as shown below.

```
SELECT MODE   = SERIES
MASTER/SLAVE = MASTER
CHECKING FOR SLAVE...
```

If wiring is correct, this screen will appear:

```
SELECT MODE   = SERIES
MASTER/SLAVE = MASTER
FOUND SLAVE : A B C
```

After receiving the control command from the Master, all Slaves will be locked on the SLAVE screen and all keys except (•) are disabled so that slaves cannot be operated by pressing front keys. This ensures the Master supply be in control.

```
MODE : SERIES     ERR : NONE
        SLAVE A
```

Once the Master and Slave settings are done, users can then operate the Master only to set up the output voltage and current.

To release from this operation mode (series operation mode in this example), press (•) (LCL) to access to the series/parallel setting screen and turn the knob to select OFF for series/parallel selection to leave the series or parallel operation mode and return to the local operation mode so that the power supply can be controlled by pressing the front keys again. Do not change the operation mode while the instruments are in their output state or they will cause the Master's communication to fail and display an error message. After power-off, if you want to keep the previous series/parallel setting, please turn on the Slave first. Then turn on the Master.

ManualsPlus.com

4.8.3 Error Message of Series/Parallel Connection

If the RS485 wiring is wrong or the signal is not correct, the Master will display the following message in the screen for searching Slaves:

```
SELECT MODE   = PARALLEL
MASTER/SLAVE  = MASTER
FOUND SLAVE : NONE
```

If more than one Master is being set in the series/parallel operation mode, the following message will be displayed.

```
SELECT MODE   = PARALLEL
MASTER/SLAVE  = MASTER
MULTI-MASTER,PLEASE CHECK AGAIN
```

If one of the power supplies is set to different series/ parallel operation mode, the following message will appear on-screen:

```
SELECT MODE   = PARALLEL
MASTER/SLAVE  = MASTER
ERROR-MODE,PLEASE CHECK AGAIN
```

After finishing setting procedure, if the Master cannot have a communication with one of the three Slaves, the Master will present the following error message (Slave A in this example).

```
SLAVE A
COMMUNICATION ERROR!!!
```

After finishing the setting procedure, if a Slave receives only the output command sent by the Master but does not receive the synchronization signal, it will present the following error messages. The error message “SYNC ON” is shown when the slave is not receiving the synchronous output ON signal. The

ManualsPlus.com

error message “SYNC OFF” is shown when the slave is not receiving the synchronous output OFF signal.

```
MODE : PARALLEL  ERR : SYNC ON
SLAVE A
```

4.9 External Tuning Setting

Models XLN3640/XLN6024/XLN8018/XLN10014 provides the capability to control the output voltages by an external voltage/resistance. The range of the external voltage is in 0 - 10 VDC or 0 - 5 VDC and the range of the external variable resistance is between 0 - 5 kΩ to control the output voltage (0 - 36 V for XLN3640, 0 - 60 V for XLN6024, 0 - 80 V for XLN8018, and 0 - 100 V for XLN10014) and the output current (0 - 40 A for XLN3640, 0 - 24 A for XLN6024, 0 - 18 A for XLN8018, and 0 - 14.4 A for XLN10014). The wirings of the external control are shown in the following figure.

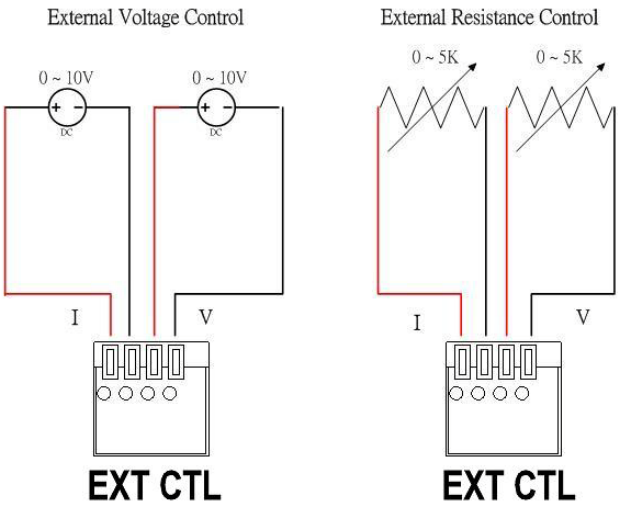

The external voltage control or external resistance control can be set in the “system setting” screen. Since the external control circuit uses a 12bit D/A converter for 0 - 36 V for XLN3640 (or 0 - 60 V for XLN6024 or 0 - 80 V for XLN8018 or 0 - 100 V for XLN10014) output voltage and 0 - 40A for

ManualsPlus.com

XLN3640 (or 0 - 24 A for XLN6024 or 0 - 18 A for XLN8018 or 0 - 14.4 A for XLN10014) output current, the resolution of voltage and current will be different in response. The screen will show similar to the following (accuracy is 10mV):

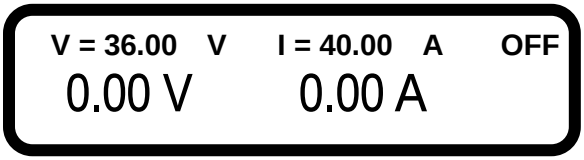

4.10 Timer of Current Flow

This function offers testing of the cutoff time of a breaker or a fuse. First, connect the test object to output terminal as shown below.

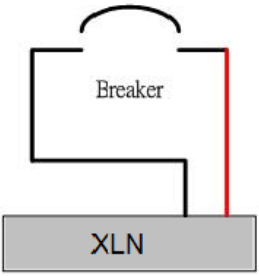

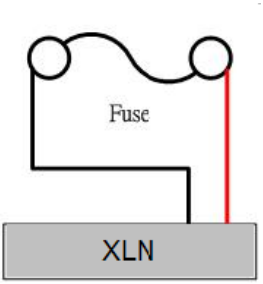

Press (Menu), (6), and then (1) in the main screen to enter the current flow counter screen.

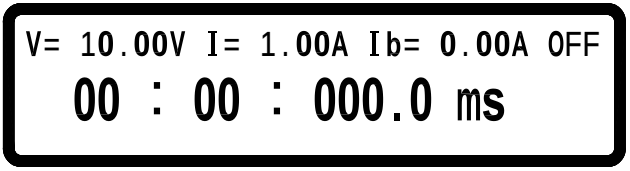

Press VSET to set the voltage. Then press ISET to set the current (I), which is the maximum current you want to test. Press ISET twice to set the breaker/fuse current (Ib). After setting up the output voltage/current and pressing (On/Off) to turn on the output, the system will start counting down the timer until the breaker or fuse is open. The count starts from when output has reached the Ib current. The resolution of the timer is 100us (0.1 ms) and the maximum counting period is one hour. If the counter doesn't work after

ManualsPlus.com

pressing (On/Off), error occurs herein and the screen will display an error message after two seconds. One of the following three scenarios may happen:

A. Connector not ready

If a fuse is not properly connected to the output connector or a breaker under test has not been switched to ON position, the screen will show an error message as shown below.

```
TEST FAIL!! CONNECTOR NOT READY!
  00 : 00 : 000.0 ms
```

B. Current setting too large

The output current is set too big that a breaker is open or a fuse is burnt to open before output current is reaching the setting value. The screen will show an error message as shown below.

```
TEST FAIL!! I SETTING TOO LARGE!
  00 : 00 : 000.0 ms
```

C. Voltage setting too small

The voltage is set too small, therefore the output current is unable to reach the setting value. The screen will show an error message as shown below.

```
TEST FAIL!! V SETTING TOO SMALL!
  00 : 00 : 000.0 ms
```

4.11 Programmable Capability (SCPI Command Only)

Models XLN3640/XLN6024/XLN8018/XLN10014 provides the capability to support list mode, which allows users to download a small program to internal memory and execute a program from there. There are memory spaces to store

ManualsPlus.com

10 programs that can have 150 steps in total for setting purpose. This can only be programmed remotely via USB, GPIB, or LAN with SCPI commands or with the included software. Each program does not restrict the step quantity, however, the sum of 10 programs are restricted to 150 steps. For each program users can set up how many times to repeat the program. For each step users may be able to set up the output voltage, current, and period of time (50 ms minimum) to stay on the step. Please refer to “SCPI command subsystem” section for detail SCPI commands.

Below are some examples of commands used to setup a custom program in list mode.

Example 1:

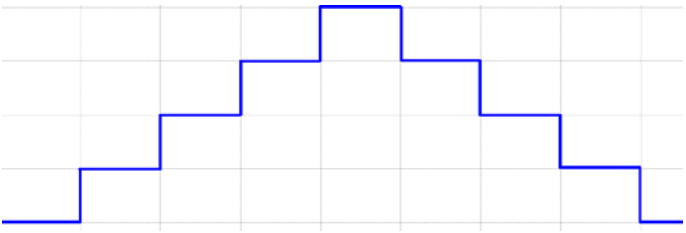

To output the wave form shown above, users may edit the program as the following orders:

PROG 1	Choose program number
PROG:CLE	Clear program 1 data
PROG:REP 0	No repeat (repeat one time for “1”)
PROG:TOTA 8	Set program 1 to have 8 steps in total
PROG:STEP 1	Following 3 settings are for step 1
PROG:STEP:CURR 1	Set output current to 1 ampere
PROG:STEP:VOLT 5	Output voltage is set to 5 volts
PROG:STEP:ONT 0.1	Output ON time is set to 0.1 sec
PROG:STEP 2	Following 3 settings are for step 2
PROG:STEP:CURR 1	
PROG:STEP:VOLT 10	

ManualsPlus.com

PROG:STEP:ONT 0.1	
PROG:STEP 3	Choose step 3
PROG:STEP:CURR 1	
PROG:STEP:VOLT 15	
PROG:STEP:ONT 0.1	
PROG:STEP 4	Choose step 4
PROG:STEP:CURR 1	
PROG:STEP:VOLT 20	
PROG:STEP:ONT 0.1	
PROG:STEP 5	Choose step 5
PROG:STEP:CURR 1	
PROG:STEP:VOLT 15	
PROG:STEP:ONT 0.1	
PROG:STEP 6	Choose step 6
PROG:STEP:CURR 1	
PROG:STEP:VOLT 10	
PROG:STEP:ONT 0.1	
PROG:STEP 7	Choose step 7
PROG:STEP:CURR 1	
PROG:STEP:VOLT 5	
PROG:STEP:ONT 0.1	
PROG:STEP 8	Choose step 8
PROG:STEP:CURR 1	
PROG:STEP:VOLT 0	
PROG:STEP:ONT 0.1	
PROG:NEXT 0	Select next program to run after program 1 is complete, 0 means stop
PROG:SAV	After edit, use Save command to store program 1 in the hardware
PROG 1 PROG:RUN ON	To run the program stored in the hardware, select program number and then use RUN ON command to execute the program.

ManualsPlus.com

Example 2:

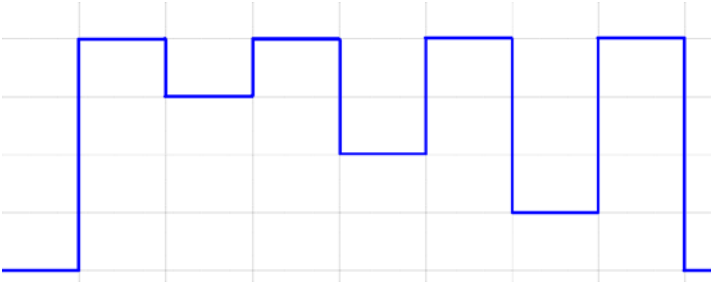

To output the wave form shown above, the following example program can be used.

PROG 2	Choose program number
PROG:CLE	Clear program 2 data
PROG:REP 0	No repeat after running this program
PROG:TOTA 8	Set program 2 to have 8 steps in total
PROG:STEP 1	Settings for step 1
PROG:STEP:CURR 2	Set output current to 2 amperes
PROG:STEP:VOLT 20	Set output voltage to 20 volts
PROG:STEP:ONT 0.5	Set output ON time to 0.5 sec
PROG:STEP 2	Choose step 2
PROG:STEP:CURR 2	
PROG:STEP:VOLT 15	
PROG:STEP:ONT 0.5	
PROG:STEP 3	Settings for step 3
PROG:STEP:CURR 2	
PROG:STEP:VOLT 20	
PROG:STEP:ONT 0.5	
PROG:STEP 4	Choose step 4
PROG:STEP:CURR 2	
PROG:STEP:VOLT 10	
PROG:STEP:ONT 0.5	
PROG:STEP 5	Choose step 5
PROG:STEP:CURR 1	
PROG:STEP:VOLT 20	
PROG:STEP:ONT 0.5	
PROG:STEP 6	Choose step 6

ManualsPlus.com

PROG:STEP:CURR 2	
PROG:STEP:VOLT 5	
PROG:STEP:ONT 0.5	
PROG:STEP 7	Choose step 7
PROG:STEP:CURR 2	
PROG:STEP:VOLT 20	
PROG:STEP:ONT 0.5	
PROG:STEP 8	Choose step 8
PROG:STEP:CURR 2	
PROG:STEP:VOLT 0	
PROG:STEP:ONT 0.5	
PROG:NEXT 0	Select next program to run after program 2 is complete, 0 means stop
PROG:SAV	After edit, use Save command to store program 2 in the hardware
PROG 2 PROG:RUN ON	To run the program stored in the hardware, select program number and then use RUN ON command to execute the program.

ManualsPlus.com

Example 3:

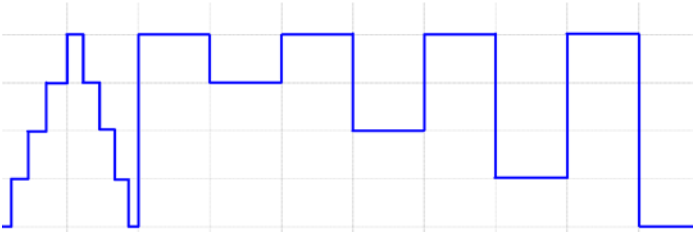

If it needs to execute Program 2 right after Program 1 is executed then program 1 shall be modified to have NEXT 2 command. The following steps can be taken for the modification and execute the programs.

PROG 1	Select program 1
PROG:NEXT 2	Change the NEXT command from NEXT 0 to NEXT 2
PROG:SAV	After edit is complete use Save command to store changes in the hardware
PROG 1 PROG:RUN ON	To run the program, select the program number first and then use RUN ON command to execute it.

ManualsPlus.com

4.12 Multi-unit Connection mode (RS485)

XLN3640 / XLN6024 / XLN8018 / XLN10014 can use RS485 to provide multi-units series connection function for up to 30 units (If more than 10 units, please add a 120Ω resistor terminator in the last unit as shown in the below figure. Turn on the system after series connection is completed. Press (Menu) → (9) on the main page and set CHAIN ON/OFF to ON (Series/Parallel connection will be cancelled) and set each unit with a different Address (1 - 30). Then by using USB connected to PC, multiple units can be controlled by using the commands in "SERIES CONNECTION COMMAND LIST" section below.

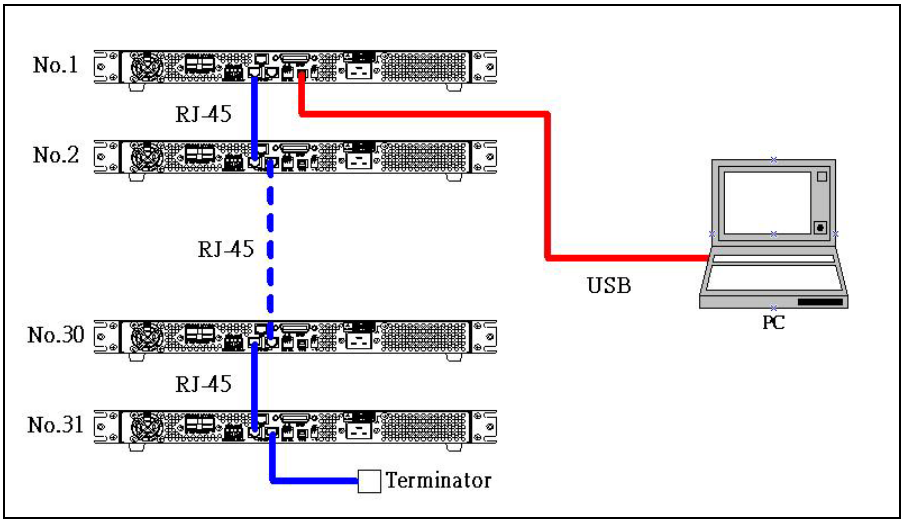

SERIES CONNECTION COMMAND LIST

The series connection command used by all XLN series power supplies use a carriage return (CR) character for termination of all ASCII strings. For example, the system will respond with the corresponding value or string when delivering the inquire command, or respond "OK" when delivering the setting command. In case any errors happen, the system will respond with an error message. (Please refer to ERROR RESPONSE LIST section).

ManualsPlus.com

SYSTEM CONTROL COMMAND:

Command	Description
CADR	followed by address, which can be 1 to 30 and is used to access the power supply
CCLS	Clear status
CRST	Reset command. Brings the power supply to a known state
CIDN?	Returns the power supply model identification
CREV?	Returns the firmware version
CSN?	Returns the serial number
CST?	Returns the device status
CCLR?	Clear protect

OUTPUT CONTROL COMMAND:

Command	Description
CPV	Sets the output voltage value in Volts
CPV?	Reads the output voltage setting
CMV?	Reads the actual output voltage
CPC	Sets the output current value in Amperes
CPC?	Reads the output current setting
CMC	Reads the actual output current
CDVC?	Display voltage and current data
COUT	Turns the output to ON or OFF
COUT?	Returns the output On/Off status
COV	Sets the OVP level
COV?	Returns the OVP setting level
COVP	Sets the OVP on/off
COVP?	Returns the OVP on/off
COC	Sets the OCP level

ManualsPlus.com

COC?	Returns the OCP setting level
COCP	Sets the OCP on/off
COCP?	Returns the OCP on/off
COP	Sets the OPP level
COP?	Returns the OPP setting level
COPP	Sets the OPP on/off
COPP?	Returns the OPP on/off
CMODE?	Returns the power supply operation mode

==========

SYNCHRONOUS CONTROL COMMAND:

Command	**Description**
GRST	Reset command. Brings the power supply to a known state
GCLS	Clear status
GCLR	Clear protect
GPV	Sets the output voltage value in Volts
GPC	Sets the output current value in Amperes
GOUT	Turns the output to ON or OFF
GOV	Sets the OVP level
GOVP	Sets the OVP on/off
GOC	Sets the OCP level
GOCP	Sets the OCP on/off
GOP	Sets the OPP level
GOPP	Sets the OPP on/off

==========

EXAMPLES:

Q1. How to read back ID for Address 5 on the system?

CADR 5 ➔ OK
CIDN? ➔ B&K Precision. XLN 3640,A1234567,1.15,0

Q2. How to set up Voltage for Address 7 on the system?

ManualsPlus.com

CADR 7 ➔ OK
CPV 20 ➔ OK

Q3. How to set up Output for Address 7 on the system?

CADR 3 ➔ OK
COUT 1 ➔ OK

Q4. How to read back Voltage value for Address 1 on the system?

CADR 1 ➔ OK
CMV? ➔ 10.001

Q5. How to set up Current for all the systems?

GPC 5 ➔ No response

Q6. How to set up Output for all the systems?

GOUT 1 ➔ No response

ERROR RESPONSE LIST

If PC delivers an error command or connection fails, a return string will be sent and is described below:

String	Description
OK	No error
Time out	Wait response time out
Range error	Input value is out of range
Multi master	There are more than one controller in the whole system

ManualsPlus.com

5. Protection and Error Messages

5.1 Over-voltage Protection (OVP)

When the OVP is activated and voltage measured exceeds the setting point of protected voltage, the system will enter the “Over Voltage Protect” mode that will shut off the output and show OVP on the display. Press (Enter) to reset the protection mode and deactivate the buzzer.

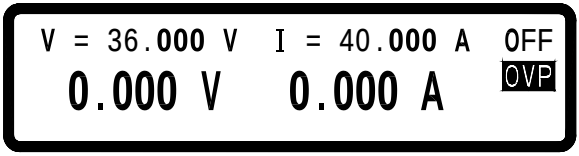

5.2 Over-current Protection (OCP)

When the OCP is activated and current measured exceeds the setting point of protected current, system will enter the “Over Current Protect” mode that will shut off the output and show OCP on the display. Press (Enter) to reset the protection mode and deactivate buzzer.

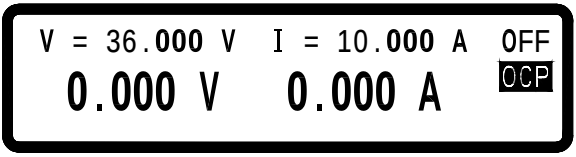

5.3 Overpower Protection (OPP)

When the OPP is activated and power measured exceeds the setting point of protected power, system will enter the “Over Power Protect” mode that will shut off the output and display OPP on the screen. Press (Enter) to reset the protection mode and deactivate buzzer.

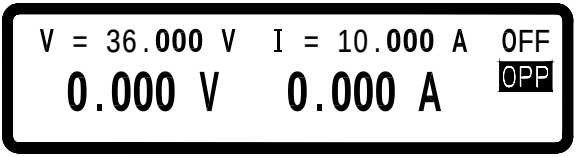

ManualsPlus.com

5.4 Constant Voltage Protection (CV TO CC)

When this function is activated, the power supply will stay in CV mode. If load changes force the system to transition from CV to CC (constant current) mode, the system will enter the “CV TO CC Protect” state that will shut off the output and display the CVC message on the screen. Press (Enter) to reset the protection and deactivate the buzzer.

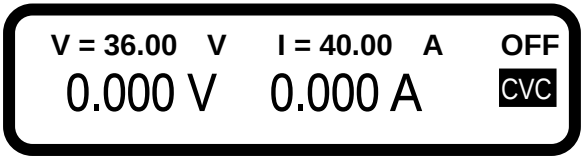

5.5 Constant Current Protection (CC TO CV)

When this function is activated the power supply will stay in CC mode. If load changes forces the transition from CC to CV (constant voltage) mode, the system will enter the “CC TO CV Protect” state that will shut off output and display CCV message on the screen. Press (Enter) to reset the protection and deactivate buzzer.

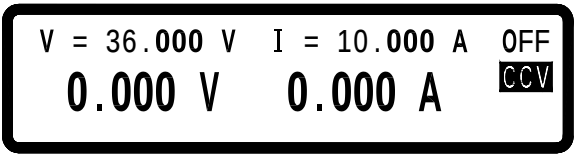

5.6 Over-temperature Protection (OTP)

When the instrument detects abnormally high temperature, the system will enter the “Over Temperature Protect” mode that will shut off the output and display the error message as shown in the following figure. Press (Enter) to reset the protection and deactivate buzzer.

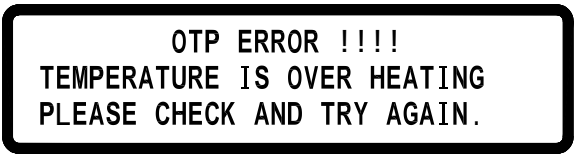

ManualsPlus.com

5.7 Low Voltage Protection (ACD)

When the machine has detected abnormally low AC power input, system will enter the “AC Detect Low Protect” mode that will shut off output and display the error message shown in the following figure. Press (Enter) to reset the protection and deactivate buzzer.

```
     AC DETECT LOW !!!!
LINE VOLTAGE IS UNDER SPEC.
OR POWER SHUTDOWN.
```

5.8 Error Input Message

When users enter a voltage or current setting that is beyond the acceptable range, system will display “RANGE ERROR” in response and show users the correct input range. Press (Enter) to re-enter the voltage/current setting.

```
      RANGE ERROR !!!!
   MIN RANGE :    0.000
   MAX RANGE :   36.000
```

ManualsPlus.com

6. Remote Interface communication protocol

The communication protocol includes standard SCPI commands and a few proprietary commands which follow the SCPI convention.

6.1 Prefaces

The SCPI interface enables users to operate the model XLN3640/XLN6024/XLN8018/XLN10014 supply through a computer or a terminal equipped with IEEE-488.2 GPIB or USB interface. Additionally, it allows remote control and monitoring.

SCPI IEEE-488.2 version supports multi units control capability that allows a user to control up to 32 XLN3640/XLN6024/XLN8018/XLN10014 units.

6.2 Parameters Definition

Type	Valid Arguments
<boolean >	" ON" or 1, " OFF" or 0
<NR1 >	The data format <NR1> is defined in IEEE-488.2 for integers. Zero, positive and negative integer numeric values are valid data.
<NRf >	**The data format <NRf> is defined in IEEE-488.2 for flexible Numeric Representation. Zero, positive and negative floating-point numeric values are some examples of valid data.**
<string >	Characters enclosed by single or double quotes
<LF >	Line Feed, Hex code is 0x0Ah
<CR>	Carriage Return, Hex code is 0x0Dh
<END >	End or identify

Note: All commands are terminated with <CR> and <LF> characters. A space is always included in between the command and the parameter. For example, to set the GPIB address of 10 to a XLN3640/XLN6024/XLN8018/XLN10014. The command line is sent:

ADDR 10<CR><LF>

Note: The <LF> and <CR> are not presented in the following examples and command descriptions. However, users must add them as termination

ManualsPlus.com

characters at the end of each command when programming.

6.3 The Error/Event List

SCPI interface can offer an error/event list that contains up to 10 errors/events. Users can read the errors/events through the "**error?**" command in a first-in first-out manner. Once an error/event is read, the read process will clear it from the memory. To clear all errors/events from the memory, the "***CLS**" command is used.

Error	Description
-000	No error
-001	Command error
-002	Execution error
-003	Query error
-004	Input Range error
-005	Parallel/Series function, Error mode
-006	Parallel/Series function, Multi-Master
-007	Parallel/Series function, No Slave found
-008	Parallel/Series function, Communication with Slave A error
-009	Parallel/Series function, Communication with Slave B error
-010	Parallel/Series function, Communication with Slave C error
-011	Parallel/Series function, Sync. signal error when output on
-012	Parallel/Series function, Sync. signal error when output off

ManualsPlus.com

6.4 Remote Communication Protocol

Command	Description
ADDRess	set the address of the machine
ADDRess?	return the address of the machine
BEEP	set beep on(1) or off(0)
CLR	clear protect status
CURRent	set current
CURRent?	return current setting
ERRor?	return error message
IOUT?	current readback
ISET	set current
ISET?	return current setting
LOCK	set rotary and keypad lock on(1) or off(0)
MODEL?	return model name
OCP	set current protect to off(0) or on(1)
OISET	set overcurrent protect level
OISET?	return overcurrent value
OPP	set power protect to off(0) or on(1)
OPSET	set overpower protect level
OPSET?	Return overpower value
OUT	set output on(1) or off(0)
OVP	set voltage protect to off(0) or on(1)
OVSET	set overvoltage protect level
OVSET?	return overvoltage value
STATUS?	return status of the machine
VERsion?	return version number
VOLTage	set voltage
VOLTage?	return voltage setting
VOUT?	voltage readback
VSET	Set up output voltage
VSET?	return voltage setting

ManualsPlus.com

Examples:

Q 1:How to set GPIB address?

ADDR 10	==>address is 10

Q 2:How to read back GPIB address?

ADDR?	==>return GPIB address
ADDRESS?	==>return GPIB address

Q 3:How to set up buzzer?

BEEP 1	==>trigger beep to on
BEEP off	==>trigger beep to off

Q 4:How to clear the protecting state?

CLR	==>clear protect status

Q 5:How to read back to error information?

ERR?	==>return error code

Q 6:How to set up voltage?

VSET 10	==>set voltage to 10V
VOLT 3.3V	==>set voltage to 3.3V
VOLTAGE 45	==>set voltage to 45V (for XLN6024)

Q 7:How to read the voltage setting value?

VSET?	==>return voltage setting
VOLT?	==>return voltage setting
VOLTAGE?	==>return voltage setting

Q 8:How to set up current?

ISET 1.1	==>set current to 1.1A
CURR 4.3022	==>set current to 4.3022A
CURRENT 0.250	==>set current to 250mA

Q 9:How to read the setting value of current?

ISET?	==>return current setting
CURR?	==>return current setting
CURRENT?	==>return current setting

Q 10:How to read the voltage outputting value?

VOUT?	==>return voltage output

ManualsPlus.com

Q 11:How to read the current outputting value?

IOUT? ==>return current output

Q 12:How to lock buttons and the rotary knob?

LOCK 1 ==>lock the keypad and knob

LOCK ON ==>lock the keypad and knob

Q 13:How to read the product model number?

MODEL? ==>return machine model name

Q 14:How to set up OVP function?

OVP 1 ==>enable OVP protect

OVP OFF ==>disable OVP protect

Q 15:How to set up OVP voltage value?

OVSET 38 ==>set OVP level to 38 V

Q 16:How to set up OCP function?

OCP 1 ==>enable OCP protect

OCP OFF ==>disable OCP protect

Q 17:How to set up OCP electric current value?

OISET 40 ==>set OCP level to 40 A

Q18:How to set up OPP function?

OPP 1 ==>enable OPP protect

OPP OFF ==>disable OPP protect

Q 19:How to set up OPP power value?

OPSET 1000 ==>set OPP level to 1000 W

Q 20:How to set up output?

OUT 1 ==>output on

OUT OFF ==>output off

Q 21:How to read state value?

STATUS? ==>return status value

Q 22:How to read the firmware version?

VER? ==>return version information

VERSION? ==>return version information

ManualsPlus.com

6.5 SCPI Conformity Information

The XLN series is entirely compatible with all IEEE-488.2 and SCPI commands (1995). Commands are included in SCPI commands (in Vol. 2, 1995).

6.5.1 Common SCPI commands

Command	Explanation
*CLS	Clear status (include error code)
*IDN?	Response:<Manufacturer>, <model>, <serial number>, <firmware type, & version >
*RCL	Recalls settings from memory. Memory numbers from 0 to 9 are valid.
*RST	Resets the power supply to its power on state.
*SAV	1. Saves defined parameters 2. Saves current settings to memory. Memory numbers from 0 to 9 are valid.

Examples:

Q 23:How to store the voltage/current settings to memory devices?

*SAV 5 ==>save current settings to memory location 5

Q 24:How to recall the voltage/current settings from memory devices?

*RCL 3 ==>recall setting from memory location 3

Q 25:How to set up software reset?

*RST

Q 26:How to identify the instrument's model number?

*IDN?

Q 27:How to clear error message?

ManualsPlus.com

*CLS

6.5.2 SCPI Command subsystem

ABORt	Abort the Output Action
FETCh	**Fetch Subsystem**
:CURRent?	Return the fetched output current
:VOLTage?	Return the fetched output voltage
MEASure	**Measure subsystem**
:CURRent?	Return the measured output current
:VOLTage?	Return the measured output voltage
MEMory	**Memory Subsystem**
<NR1 | ? >	select or return memory number, range from 0 - 9
:VSET <NRf | ? >	set or return voltage:0-36V/0-60V
:ISET <NRf | ? >	set or return current:0-40A/0-24A
:SAVE	store memory subsystem parameters
OUTput	**Output Subsystem**
<Boolean >	enable or disable output action
?	return output state
:LIMit	
:VOLTage <NRf | ? >	set or return voltage limit value
:CURRent <NRf | ? >	set or return current limit value
:STATe?	Return output mode (CV or CC)
:PROTection	
:CLEar	Reset latched protection
PROGram	**Program Subsystem**
<NR1 | ? >	select or return memory number, range

ManualsPlus.com

	from 1 - 10
:CLEar	clear program n parameters
:ALL	clear all program parameters
:NEXT <NR1 | ? >	ser or return next program number (1 - 10 , 0 for end)
:REPeat <NR1 | ? >	set or return repeat times (max. 50000)
:RUN<Boolean | ? >	set or query program on/off state
:SAV	save program parameters
:STEP < Boolean | ? >	set or return step number
:CURRent <NRf | ? >	set or return step n current setting
:ONTimet <NRf | ? >	set or return step n output time (0.050 - 20000S)
:VOLTage <NRf | ? >	set or return step n voltage setting
:TOTA[l] <NR1 | ? >	set or return program n total step numbers (max. 150)
PROTection	**Protection Subsystem**
?	return protect state
:CCCV <Boolean | ? >	set or return CC to CV protect state
:CLEar	Resets latched protection
:CVCC <Boolean | ? >	set or return CV to CC protect state
:OCP <Boolean | ? >	set or return over-current protect state
:LEVel <NRf | ? >	set or return over-current protect value
:OPP <Boolean | ? >	set or return over-power protect state
:LEVel <NRf | ? >	set or return over-power protect value
:OVP <Boolean | ? >	set or return over-voltage protect state
:LEVel <NRF | ? >	set or return over-voltage protect value
PS	**Parallel/Series Subsystem**

ManualsPlus.com

:MODE <OFF/0,PARALLEL/1,SERIES/2|? >

set or return parallel/series mode

:TYPE <MASTER/0,SLAVEA/1,SLAVEB/2,SLAVEC/3|?>

set or return master/slave setting

[SOURce] **Source Subsystem**

:CURRent <NRf | ? > set or return current level:0-40/0-24A

:PROTection <Boolean | ? >

set or return over-current state

:LEVel <NRf | ? > set or return over-current level

:VOLTage <NRf | ? > set or return voltage level:0-36/0-60V

:PROTection <Boolean | ? >

set or return over-voltage state

:LEVel <NRf | ? > set or return over-voltage level

SYStem **System Subsystem**

:BEEP <Boolean | ? > set or return BEEP state

:E5V <Boolean | ? > enable or disable extra 5V output

:ERRor? return system error

:EXTernal<OFF/0,VOLT/1,RES/2 | ? >

set or return external state

:GPIB

:ADDRess <NR1 | ? > set or return GPIB address (1-30)

:IP

:ADDRess <NR1.NR1.NR1.NR1 | ? >

set or return IP address

:CONFig <STATic/0? >

set or return IP config mode

:KEY

ManualsPlus.com

:LOCK <Boolean | ? set or return key lock state

:LCD

:BL <Boolean | ? > set or return LCD backlight state

:POWer

:CURRent <NRf | ? > set or return user define current level

:STATe <Boolean | ? > set or return user define output state

:TYPE <OFF/0,LAST/1,USER/2 | ? >

set or return power up mode

:VOLTage <NRf | ? > set or return user define voltage level

:RECall

:DEFault recall factory default setting

:REMote <USB/0,GPIB/1,ETHERNET/2 | ? >

set or return remote interface

:SERies? Return series number

TIMER **Timer Subsystem**

<Boolean > enable or disable timer mode

? return timer state

:HOUR<NR1 | ? > set or return timer hours

:MINute<NR1 | ? > set or return timer minutes

:SECond<NR1 | ? > set or return timer seconds

ManualsPlus.com

Examples:

Q 28:How to cancel all actions?
ABOR
ABORT

Q 29:How to fetch current value?
FETC:CURR?
FETCH:CURRENT?

Q 30:How to fetch voltage value?
FETC:VOLT?
FETCH:VOLTAGE?

Q 31:How to measure current?
MEAS:CURR?
MEASURE:CURRENT?

Q 32:How to measure voltage?
MEAS:VOLT?
MEASURE:VOLTAGE?

Q 33:How to set up and read back the specific memory set?
MEM 1
MEMORY 3
MEM?
MEMORY?

Q 34:How to set up and read back the voltage stored in specific memory set?
MEM:VSET 10
MEM:VSET?
MEMORY:VSET 20
MEMORY:VSET?

Q 35:How to set up and read back the current stored in specific memory set?
MEM:ISET 15

ManualsPlus.com

MEM:ISET?
MEMORY:ISET 25
MEMORY:ISET?

Q 36:How to save data to memory set?
MEM:SAVE
MEMORY:SAVE

Q 37:How to set up and cancel output?
OUT ON
OUTPUT 0

Q 38:How to set up and read back the voltage limit?
OUT:LIM:VOLT 30
OUT:LIM:VOLT?
OUTPUT:LIMIT:VOLTAGE 35
OUTPUT:LIMIT:VOLTAGE?

Q 39:How to set up and read back the current limit?
OUT:LIM:CURR 30
OUT:LIM:CURR?
OUTPUT:LIMIT:CURRENT 35
OUTPUT:LIMIT:CURRENT?

Q 40:How to set up and read back the voltage SLEW RATE?
OUT:SR:VOLT 2.4
OUT:SR:VOLT?
OUTPUT:SR:VOLTAGE 0.01
OUTPUT:SR:VOLTAGE?

Q 41:How to set up and read back the current SLEW RATE?
OUT:SR:CURR 2.5
OUT:SR:CURR?
OUTPUT:SR:CURRENT 0.01
OUTPUT:SR:CURRENT?

Q 42:How to read back the output state?
OUT:STAT?
OUTPUT:STATE?

ManualsPlus.com

Q 43:How to read back the protection state?
PROT?
PROTECTION?

Q 44:How to set up and read back the CC to CV protection state?
PROT:CCCV ON
PROT:CCCV?
PROTECTION:CCCV 0
PROTECTION:CCCV?

Q 45:How to set up and read back the CV to CC protection state?
PROT:CVCC ON
PROT:CVCC?
PROTECTION:CVCC 0
PROTECTION:CVCC?

Q 46:How to clear the state of protection?
PROT:CLE
PROTECTION:CLEAR
OUT:PROT:CLE
OUTPUT:PROTECTION:CLEAR

Q 47:How to set up and read back the overcurrent protection state?
PROT:OCP ON
PROT:OCP?
PROTECTION:OCP 0
PROTECTION:OCP?
SOUR:CURR:PROT ON
SOUR:CURR:PROT?
SOURCE:CURRENT:PROTECTION 0
SOURCE:CURRENT:PROTECTION?

Q 48:How to set up and read back the overcurrent protection point?
PROT:OCP:LEV 30
PROT:OCP:LEV?
PROTECTION:OCP:LEVEL 40
PROTECTION:OCP:LEVEL?
SOUR:CURR:PROT:LEV 25
SOUR:CURR:PROT:LEV?
SOURCE:CURRENT:PROTECTION:LEVEL 35

ManualsPlus.com

SOURCE:CURRENT:PROTECTION:LEVEL?

Q 49:How to set up and read back the overpower protection state?
PROT:OPP ON
PROT:OPP?
PROTECTION:OPP 0
PROTECTION:OPP?

Q 50:How to set up and read back the overpower protection point?
PROT:OPP:LEV 30
PROT:OPP:LEV?
PROTECTION:OPP:LEVEL 40
PROTECTION:OPP:LEVEL?

Q 51:How to set up and read back the overvoltage protection state?
PROT:OVP ON
PROT:OVP?
PROTECTION:OVP 0
PROTECTION:OVP?
SOUR:VOLT:PROT ON
SOUR:VOLT:PROT?
SOURCE:VOLTAGE:PROTECTION 0
SOURCE:VOLTAGE:PROTECTION ?

Q 52:How to set up and read back the overvoltage protection point?
PROT:OVP:LEV 30
PROT:OVP:LEV?
PROTECTION:OVP:LEVEL 40
PROTECTION:OVP:LEVEL?
SOUR:VOLT:PROT:LEV 25
SOUR:VOLT:PROT:LEV?
SOURCE:VOLTAGE:PROTECTION:LEVEL 35
SOURCE:VOLTAGE:PROTECTION:LEVEL?

Q 53:How to set up the buzzer?
SYS:BEEP ON
SYSTEM:BEEP 0

Q 54:How to set up the extra 5V voltage output?
SYS:E5V ON

ManualsPlus.com

SYSTEM:E5V 0

Q 55:How to read back error code?
SYS:ERR?
SYSTEM:ERROR?

Q 56:How to set up and read back the external adjustment state?
SYS:EXT VOLT
SYS:EXT?
SYSTEM:EXTERNAL RESISTANCE
SYSTEM:EXTERNAL?

Q 57:How to set up and read back the GPIB address?
SYS:GPIB:ADDR 5
SYS:GPIB:ADDR?
SYSTEM:GPIB:ADDRESS 6
SYSTEM:GPIB:ADDRESS?

Q 58:How to set up and read back the IP address?
SYS:IP:ADDR 192.168.0.208
SYS:IP:ADDR?
SYSTEM:IP:ADDRESS 192.168.10.10
SYSTEM:IP:ADDRESS?

Q 59:How to set up and read back the IP mode?
SYS:IP:CONF STATIC
SYS:IP:CONF?
SYSTEM:IP:CONFIG STATIC
SYSTEM:IP:CONFIG**?**

Q 60:How to set up and read back the key locking?
SYS:KEY:LOCK ON
SYSTEM:KEY:LOCK?

Q 61:How to set up and read back the LCD backlighting function?
SYS:LCD:BL ON
SYSTEM:LCD:BL?

Q 62:How to set up and read back the booting mode?
SYS:POW:TYPE LAST

ManualsPlus.com

SYS:POW:TYPE?
SYS:POWER:TYPE USER
SYS:POWER:TYPE?
SYSTEM:GPIB:ADDRESS?

Q 63:How to set up and read back the voltage under user-defined booting mode?
SYS:POW:VOLT 10
SYS:POW:VOLT?
SYSTEM:POWER:VOLTAGE 20
SYSTEM:POWER:VOLTAGE?

Q 64:How to set up and read back the current under user-defined booting mode?
SYS:POW:CURR 10
SYS:POW:CURR?
SYSTEM:POWER:CURRENT 20
SYSTEM:POWER:CURRENT?

Q 65:How to set up and read back the output state under user-defined booting mode?
SYS:POW:STAT ON
SYS:POW:STAT?
SYSTEM:POWER:STATE 0
SYSTEM:POWER:STATE?

Q 66:How to recall back default setting?
SYS:REC:DEF
SYSTEM:RECALL:DEFAULT

Q 67:How to set up and read back the communication interface?
SYS:REM GPIB
SYS:REM?
SYSTEM:REMOTE ETHERNET
SYSTEM:REMOTE**?**

Q 68:How to read back the SERIES NUMBER?
SYS:SER?
SYSTEM:SERIES?

ManualsPlus.com

Q 69:How to set up and read back the output voltage?
SOUR:VOLT 30
SOUR:VOLT?
SOURCE:VOLTAGE 35
SOURCE:VOLTAGE?

Q 70:How to set up and read back the output current?
SOUR:CURR 40
SOUR:CURR?
SOURCE:CURRENT 35
SOURCE:CURRENT?

Q 71:How to set up and read back parallel/series mode?

PS:MODE PARALLEL
PS:MODE?
PS:MODE 2
PS:MODE OFF

Q 72:How to set up and read back master/slave in parallel/series mode?

PS:TYPE MASTER
PS:MODE?
PS:MODE SLAVEB
PS:MODE 3

Q 73:How to set up Program function?

Refer to “Programmable capability” section for details.

ManualsPlus.com

6.6 State Bit Definition

When "**STATE?**" command is used, the system will return three (3) bytes in the order as shown below.

Byte 2	Byte 1	Byte 0
bit 7 - bit 0	bit 7 - bit 0	bit 7 - bit 0

The definition of each bit is described in the following:

byte 0:	bit 7	OVP on/off status
	bit 6	OCP on/off status
	bit 5	OPP on/off status
	bit 4	CC to CV on/off status
	bit 3	CV to CC on/off status
	bit 2	output on/off status
	bit 1	LCD back light on/off status
	bit 0	External 5V output on/off status
byte 1:	bit 7	OVP occur flag
	bit 6	OCP occur flag
	bit 5	OPP occur flag
	bit 4	CC to CV occur flag
	bit 3	CV to CC occur flag
	bit 2	AC detect low occur flag
	bit 1	OTP occur flag
	bit 0	reserved
byte 2:	bit 7 - 0	reserved

ManualsPlus.com

6.7 LAN Communication (-GL versions)

XLN series power supplies provide three LAN control modes, including Web server, Telnet and Sockets. First, enter the first Item “System Setting” on the menu to set the interface selection (Remote Control) to Ethernet. Then, select IP setting procedure as Static. An IP address is required to complete setup. After completed, the supply will be able to use the above LAN control mode to control the power supply.

Using Web Server

XLN series with the –GL option have a built-in Web Server. User can control the power supply on a computer using a Web browser. Open Web browser and input IP address to enter the Welcome page, as shown below.

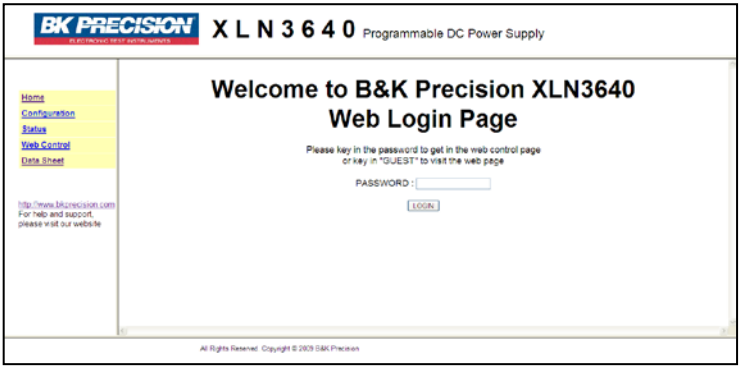

Enter password (default is 123456) to login the main page (Home), and then click the links on the left column to configure or control settings.

Main Page (Home)

ManualsPlus.com

The main page shows all the basic message and network information.

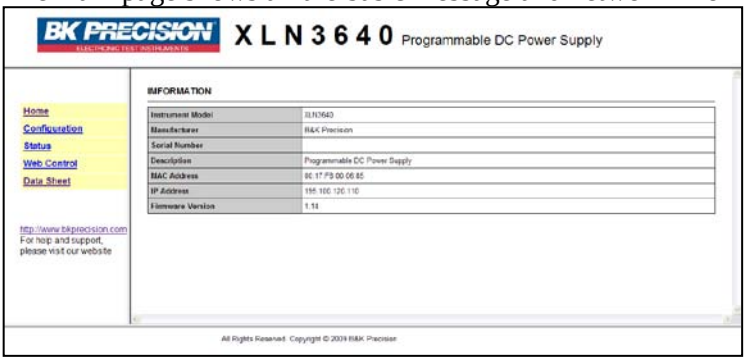

Setting Page (Configuration)

This page allows you to setup protection settings and reset/setup password for the system.

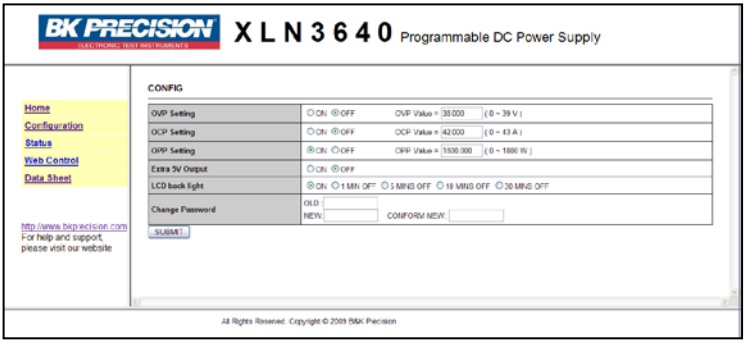

ManualsPlus.com

Status Page (Status)

Display the status of the system. If any error codes are shown, please refer to “Error/Event list” section for details.

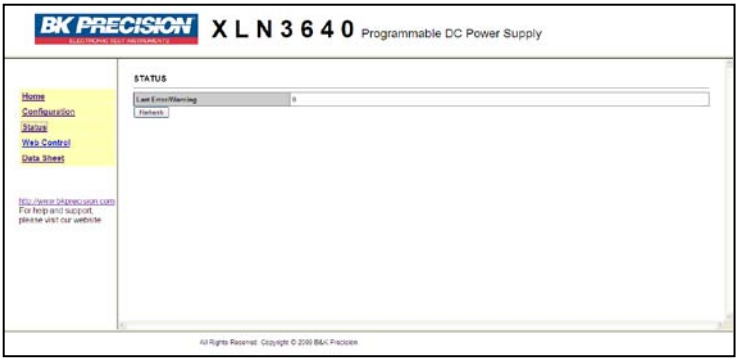

Web Control

This page allows user to set up voltage/current and output. Additionally, the display will allow monitoring of the output voltage/current value (JAVA support is required for display).

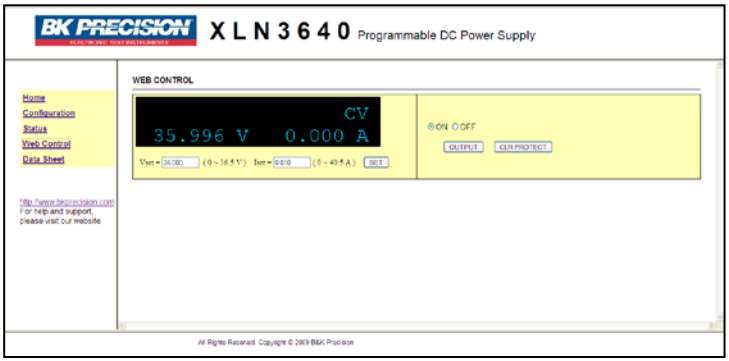

ManualsPlus.com

Using Telnet

The power supply can be controlled via Telnet over the Ethernet interface. Simply go into command prompt under MS-DOS and enter: Telnet <DeviceIP> 5024 (<Device IP> is IP address of the unit; 5024 is the Telnet port). A welcome message will be shown as below:

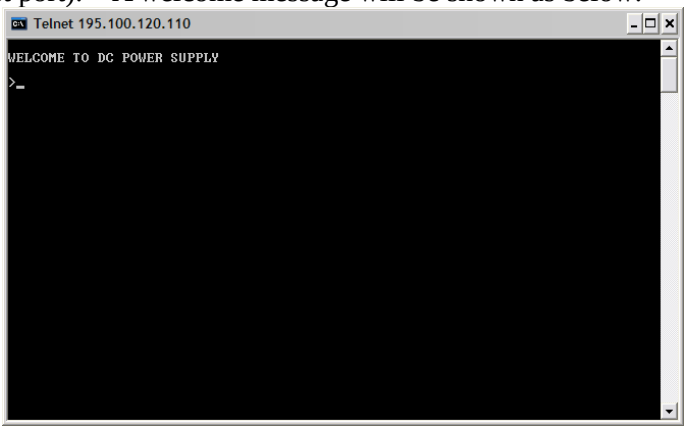

Input SCPI command to communicate with the system, such as below:

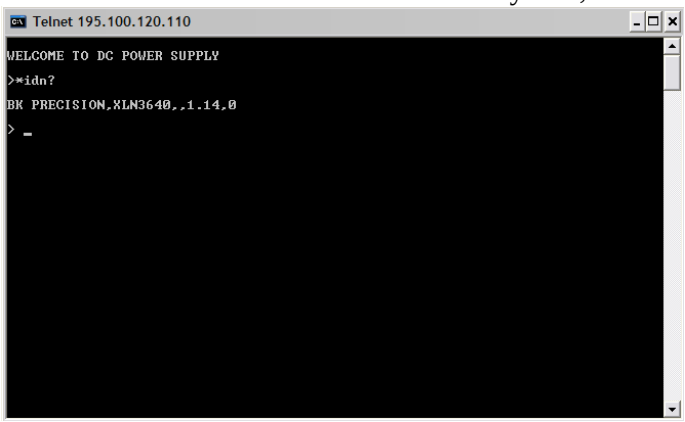

Using Sockets

All XLN series use port 5025 to provide the standard function for SCPI socket. Users can use SCPI commands to control the supply through their own program by using the standard SCPI socket.

ManualsPlus.com

7. Assemble Accessories

7.1 Assemble Rack Mount Brackets

The XLN3640/XLN6024/XLN8018/XLN10014 is designed to fit in a space of one rack unit (1U) and can be mounted in a standard 19-inch rack panel or cabinet. Rack mount brackets must be assembled before mounting the unit in a rack. Refer to the following figure to assemble the rack mount brackets.

Rack mount Brackets

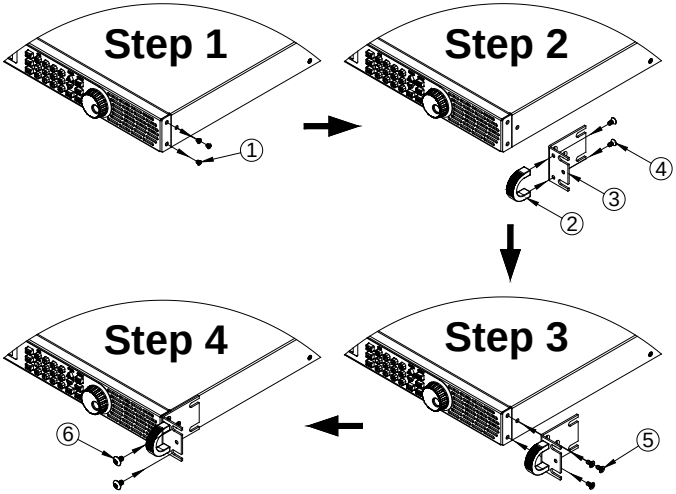

ManualsPlus.com

7.2 Assembly of Output Protective Cover (XLN6024/XLN8018/XLN10014)

Safety regulation requests protective cover when the output voltage is higher than 45 VDC. Therefore, there are protective covers for the output connectors for the XLN6024/XLN8018/XLN10014. Refer to the following figure for the assembly/disassembly of the output protective cover.

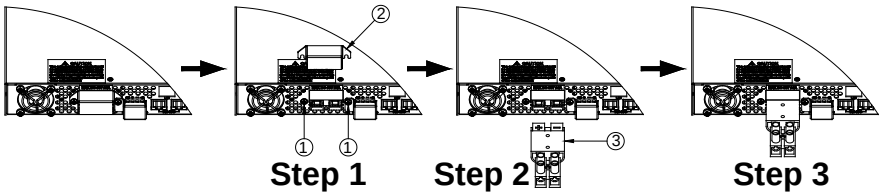

ManualsPlus.com

7.3 Assembly of Remote Sense Protective Cover (XLN6024/XLN8018/XLN10014)

Safety regulation requests protective cover when the voltage is higher than 45 VDC. Therefore, there are protective covers for the remote sense connectors for the XLN6024/XLN8018/XLN10014. Refer to the following figure for the assembly/disassembly of the remote sense protective cover.

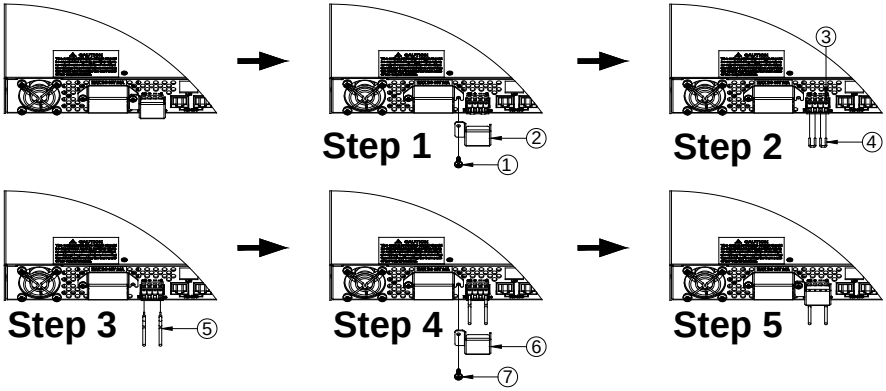

ManualsPlus.com

8. Accessories

Product Name: XLN3640/XLN6024/XLN8018/XLN10014

Parts List:

Item	Name & Specification	Remarks
1.	Terminal Block for Rapid Plug Connector	
2.	XLNRC Output Rapid Connector	Includes two solder plugs
3.	Rack mount Bracket kit	
4.	Handle bar kit	
5.	Operation Manual	
6.	XLNPC Power Cord	
7.	Test Report and Certificate of Calibration	

ManualsPlus.com

ManualsPlus.com

9. Service Information

Warranty Service: Please go the support and service section on our website www.bkprecision.com to obtain a RMA #. Return the product in the original packaging with proof of purchase to the address below. Clearly state on the RMA the performance problem and return any leads, probes, connectors and accessories that you are using with the device.

Non-Warranty Service: Please go the support and service section on our website www.bkprecision.com to obtain a RMA #. Return the product in the original packaging to the address below. Clearly state on the RMA the performance problem and return any leads, probes, connectors and accessories that you are using with the device. Customers not on an open account must include payment in the form of a money order or credit card. For the most current repair charges please refer to the service and support section on our website.

Return all merchandise to B&K Precision Corp. with pre-paid shipping. The flat-rate repair charge for Non-Warranty Service does not include return shipping. Return shipping to locations in North America is included for Warranty Service. For overnight shipments and non-North American shipping fees please contact B&K Precision Corp.

B&K Precision Corp.

22820 Savi Ranch Parkway

Yorba Linda, CA 92887

www.bkprecision.com

714-921-9095

Include with the returned instrument your complete return shipping address, contact name, phone number and description of problem.

ManualsPlus.com

10. Limited Three-year Warranty

B&K Precision Corp. warrants to the original purchaser that its products and the component parts thereof, will be free from defects in workmanship and materials for a period of **three years** from date of purchase.

B&K Precision Corp. will, without charge, repair or replace, at its option, defective product or component parts. Returned product must be accompanied by proof of the purchase date in the form of a sales receipt.

To obtain warranty coverage in the U.S.A., this product must be registered by completing a warranty registration form on our website www.bkprecision.com within fifteen (15) days of purchase.

Exclusions: This warranty does not apply in the event of misuse or abuse of the product or as a result of unauthorized alterations or repairs. The warranty is void if the serial number is altered, defaced or removed.

B&K Precision Corp. shall not be liable for any consequential damages, including without limitation damages resulting from loss of use. Some states do not allow limitations of incidental or consequential damages. So the above limitation or exclusion may not apply to you.

This warranty gives you specific rights and you may have other rights, which vary from state-to-state.

B&K Precision Corp.
22820 Savi Ranch Parkway
Yorba Linda, CA 92887
www.bkprecision.com
714-921-9095

ManualsPlus.com

22820 Savi Ranch Parkway
Yorba Linda, CA 92887
www.bkprecision.com

© 2010, 2009 B&K Precision Corp.

Printed in Taiwan
v061713

ManualsPlus.com

BK PRECISION®

Model: XLN15010, XLN30052, XLN60026

High Power Programmable DC Power Supply

USER MANUAL

ManualsPlus.com

Safety Summary

The following safety precautions apply to both operating and maintenance personnel and must be observed during all phases of operation, service, and repair of this instrument. Before applying power, follow the installation instructions and become familiar with the operating instructions for this instrument.

Failure to comply with these precautions or with specific warnings elsewhere in this manual violates safety standards of design, manufacture, and intended use of the instrument. B&K Precision assumes no liability for a customer's failure to comply with these requirements. This is a Safety Class I instrument.

GROUND THE INSTRUMENT

To minimize shock hazard, the instrument chassis and cabinet must be connected to an electrical ground. This instrument is grounded through the ground conductor of the supplied, three-conductor ac power cable. The power cable must be plugged into an approved three-conductor electrical outlet. Do not alter the ground connection. Without the protective ground connection, all accessible conductive parts (including control knobs) can render an electric shock. The power jack and mating plug of the power cable meet IEC safety standards.

DO NOT OPERATE IN AN EXPLOSIVE ATMOSPHERE

Do not operate the instrument in the presence of flammable gases or fumes. Operation of any electrical instrument in such an environment constitutes a definite safety hazard.

KEEP AWAY FROM LIVE CIRCUITS

Instrument covers must not be removed by operating personnel. Component replacement and internal adjustments must be made by qualified maintenance personnel. Disconnect the power cord before removing the instrument covers and replacing components. Under certain conditions, even with the power cable removed, dangerous voltages may exist. To avoid injuries, always disconnect power and discharge circuits before touching them.

DO NOT SERVICE OR ADJUST ALONE

Do not attempt any internal service or adjustment unless another person, capable of rendering first aid and resuscitation, is present.

ManualsPlus.com

DO NOT SUBSTITUTE PARTS OR MODIFY THE INSTRUMENT

Do not install substitute parts or perform any unauthorized modifications to this instrument. Return the instrument to B&K Precision for service and repair to ensure that safety features are maintained.

WARNINGS AND CAUTIONS

WARNING and ***CAUTION*** statements, such as the following examples, denote a hazard and appear throughout this manual. Follow all instructions contained in these statements.

A ***WARNING*** statement calls attention to an operating procedure, practice, or condition, which, if not followed correctly, could result in injury or death to personnel.

A ***CAUTION*** statement calls attention to an operating procedure, practice, or condition, which, if not followed correctly, could result in damage to or destruction of part or all of the product.

WARNING: Do not alter the ground connection. Without the protective ground connection, all accessible conductive parts (including control knobs) can render an electric shock. The power jack and mating plug of the power cable meet IEC safety standards.

WARNING: To avoid electrical shock hazard, disconnect power cord before removing covers. Refer servicing to qualified personnel.

CAUTION: Before connecting the line cord to the AC mains, check the rear panel AC line voltage indicator. Applying a line voltage other than the indicated voltage can destroy the AC line fuses. For continued fire protection, replace fuses only with those of the specified voltage and current ratings.

CAUTION: This product uses components which can be damaged by electro-static discharge (ESD). To avoid damage, be sure to follow proper procedures for handling, storing and transporting parts and subassemblies which contain ESD-sensitive components.

ManualsPlus.com

Store/ Maintain

Storage

When this device is not in use, properly package it and store it in an environment suitable for storage (if present in a good preserving environment, the packaging process can be waived).

Freight

While moving this product, move it by using the original packaging to pack this product in advance. If the packaging material is lost, use an equivalent buffer material to replace it in packaging; and with external marks indicating “fragile & water-prevention”.

Maintenance

Please return the power supply to factory for any repair, service, or maintenance.

Disposal

When the device is in an unusable condition and cannot be repaired, please discard it according to your company’s disposal procedures or local legal procedures. Do not discard arbitrarily to avoid polluting the environment.

ManualsPlus.com

Table of Contents

1. Introduction 5

1.1 Product Summary 5

1.2 Features 5

1.3 Specifications 7

1.4 Package Contents 9

1.5 Environmental Conditions 10

1.6 Storage 10

1.7 Installing Rackmount Brackets 11

1.8 Removing Protective Covers 12

1.9 Connecting AC Input 13

1.10 Fuses 16

1.11 Warm-up Time 16

1.12 Power-off Procedure 16

1.13 Caution 16

2. Front Panel Operation 18

2.1 Front Panel Overview 18

2.2 Menu Settings and Configuration 21

2.3 Rear Panel Overview 30

Operation Instructions 32

2.4 Voltage Setting 32

2.5 Current Setting 32

ManualsPlus.com

2.6 Overvoltage Protection OVP 32

2.7 Overcurrent Protection OCP 33

2.8 Overpower Protection OPP 33

2.9 Voltage Output 33

2.10 Control Voltage Output with Rotary knob 33

2.11 Timer Function 34

2.12 Parallel Mode Setting 34

2.12.1 Error Message of Parallel Connection 36

2.13 External Analog Interface 38

2.13.1 Analog Interface Pin Assignment 38

2.13.2 Functions 39

2.14 Programmable Sequence Mode (List mode) 51

2.15 Multi-unit Connection Mode (RS485) 57

3. Protection and Error Messages 58

3.1 Overvoltage Protection (OVP) 58

3.2 Overcurrent Protection (OCP) 58

3.3 Overpower Protection (OPP) 58

3.4 Constant Voltage Protection (CV TO CC) 59

3.5 Constant Current Protection (CC TO CV) 59

3.6 Overtemperature Protection (OTP) 59

3.7 Low Voltage Protection (ACD) 60

3.8 Input Error Message 60

ManualsPlus.com

4. Remote Communication.....61

4.1 Interface Connection.....61

4.2 Parameters Definition.....66

4.3 The Error/Event List.....67

4.4 Remote Communication Protocol.....69

4.5 SCPI Conformity Information.....72

4.5.1 Common SCPI commands.....72

4.5.2 SCPI Command subsystem.....73

4.6 State Bit Definition.....84

4.7 Multi-Unit Programming Commands.....85

4.7.1 System Control Commands.....85

4.7.2 Output Control Commands.....88

4.7.3 Synchronous Control Commands.....93

4.7.4 Error List.....96

5. Calibration.....97

5.1 Required Equipment.....97

5.2 Voltage Calibration.....98

5.3 OVP Calibration.....101

5.4 Current Calibration.....102

5.5 OCP Calibration.....104

ManualsPlus.com

1. Introduction

1.1 Product Summary

B&K Precision's high voltage XLN series are programmable DC power supplies with single outputs that offer maximum power output up to 1560 W. With a 16-bit D/A, A/D converter embedded, the power supplies provide voltage and current resolution of 1 mV and 1 mA. By connecting up to 4 power supplies in parallel, maximum output power can reach 6240 W.

Additionally, the power supplies have extensive protection features for safe operation, such as overvoltage protection (OVP), overcurrent protection (OCP), and overpower protection (OPP). For remote operation, the high voltage XLN series offers standard USB, RS-485, and analog interface for versatile remote controllability. Optionally, users can also add LAN and GPIB interface capability (-GL versions).

1.2 Features

1) Output Voltage & Current

Voltage output range:	**5 – 150 V (XLN15010)**
	5 – 300 V (XLN30052)
	5 – 600 V (XLN60026)
Current output range:	**0.04 – 10.4 A (XLN15010)**
	0.02 – 5.2 A (XLN30052)
	0.01 – 2.6 A (XLN60026)
Power output range:	**0 – 1560 W**

2) Rotary knob, numerical keys and function keys

The rotary knob can be used to rapidly change the output voltage setting and simulate the surge of the voltage output. It offers a good solution for testing triggering circuits. Numerical keys allow for direct entry of parameters. Using function keys to switch modes makes the overall operation more convenient.

ManualsPlus.com

3) Precise voltage and current measurement

Besides the precise output, the high voltage XLN series also offers the capability to measure voltage and current accurately (readback), saving users the additional expense and space for extra measuring instruments.

4) Internal memory and timer function

The high voltage XLN series provides internal memory for storage and retrieval of 10 instrument settings. The instruments provide one timer with the resolution of 1 second. The timers are used to time the outputs. When the timer counts down to zero the power supply will automatically turn the output off. This feature is useful when the supply is providing power to the test object in a burn-in room where operators can precisely set the time when the equipment is to shut off.

5) Programmable sequence mode (List mode)

Programmable list mode allows users to create test sequences to store and run inside the power supply using remote commands sent via USB, GPIB, and LAN. Up to 10 program sequences can be stored, each allowing a maximum of 150 steps.

6) OVP (overvoltage protection), OCP (overcurrent protection), OPP (overpower protection) and key lock functions

The overvoltage protection (OVP), overcurrent protection (OCP) and overpower protection (OPP) features limit the maximum output current and voltage to avoid damages to the unit under test (UUT). The key lock feature disables all keys except the CLR key. It prevents damaging the UUT by accidentally entering the wrong settings.

7) Parallel connection mode

The parallel connection mode of two or more units (maximum 4 units) significantly increases the combined output power to a maximum of 6240 W. For example, in parallel connection mode withfour XLN15010, the maximum output is 150 V/41.6 A.

8) Multi-unit connection mode

The RS 485 interface can be used to connect multiple power supplies in series, up to maximum of 31 units. They can be controlled via USB interface with a computer.

ManualsPlus.com

1.3 Specifications

Note: All specifications apply to the unit after a temperature stabilization time of 15 minutes over an ambient temperature range of 23 °C ± 5 °C. Specifications are subject to change without notice.

Specifications			
Models	**XLN15010**	**XLN30052**	**XLN60026**
Output Rating			
Output Voltage	5 – 150 V	5 – 300 V	5 – 600 V
Output Current	0.04 – 10.4 A	0.02 – 5.2 A	0.01 – 2.6 A
Output Power	1560 W		
Line Regulation			
Voltage	≤ 17 mV	≤ 32 mV	≤ 62 mV
Current	≤ 0.1% + 10.4 mA	≤ 0.1% + 5.2 mA	≤ 0.1% + 2.6 mA
Load Regulation			
Voltage	≤ 17 mV	≤ 32 mV	≤ 62 mV
Current	40.4 mA	20.8 mA	10.4 mA
Ripple/Noise (20Hz-20MHz)			
Normal Mode Voltage (≥ 0.5 % of max. power)	≤ 10 mVrms / ≤ 100 mVpp	≤ 25 mVrms / ≤ 150 mVpp	≤ 50 mVrms / ≤ 300 mVpp
Normal Mode Current	≤ 15 mA	≤ 10 mA	≤ 5 mA
Programming and Readback Resolution			
Voltage/Current	10 mV/1 mA		

ManualsPlus.com

Programming and Readback Accuracy (% output+offset)			
Voltage	0.05 %+75 mV	0.05 %+150 mV	0.05%+300 mV
Current	0.1 %+30 mA	0.1 %+15.6 mA	0.1%+7.8 mA

General			
Transient Response Time	≤ 2 ms	≤ 2 ms	≤ 2 ms
Efficiency	≥ 80 %	≥ 80 %	≥ 80 %
OVP Adjustment Range	5 – 158 V	5 – 315 V	5 – 630 V
OVP Accuracy	750 mV	1.5 V	3 V
OCP Accuracy	104 mA	52 mA	26 mA
Average Command Response Time	50 ms	50 ms	50 ms
Power Factor Correction	≥ 0.99 (Full load)	≥ 0.99 (Full load)	≥ 0.99 (Full load)
Remote Sense Compensation	5 V		
Rising Time at Full Load	≤ 100 ms	≤ 100 ms	≤ 100 ms
Rising Time at No Load	≤ 100 ms	≤ 100 ms	≤ 100 ms
Falling Time at Full Load	≤ 100 ms	≤ 100 ms	≤ 100 ms
Falling Time at No Load	≤ 1000 ms	≤ 2000 ms	≤ 3000 ms
Standard Interface	USB, RS485, Analog Interface		
Optional Interface	LAN, GPIB		
AC Line Rated Input Voltage	100 – 240 VAC (Full load)		
Tolerance/Variation in Voltage	-15% to +10% (10% power de-rating mode when voltage under 95 VAC)		
Rated Frequency	47 Hz-63 Hz		
Maximum Rated Input Power	1950 VA		
Temperature Ratings(O)	Operation (0 °C -- 40 °C)		

ManualsPlus.com

Temperature Ratings(S)	Storage (-10 °C -- 70 °C)
Dimensions(W*H*D)	16.5 x 1.7 x 17 inch(420 x 44.2 x 460 mm)
Weight	19.8 lbs. (9 kg)

To ensure the most current version of this manual, please download the latest version here: http://www.bkprecision.com/search/XLN15010

For current up-to-date product information, please visit www.bkprecision.com

1.4 Package Contents

Please inspect the instrument mechanically and electrically upon receiving it. Unpack all items from the shipping carton, and check for any obvious signs of physical damage that may have occurred during transportation. Report any damage to the shipping agent immediately. Save the original packing carton for possible future reshipment. Every power supply is shipped with the following contents:

- XLN15010/XLN30052/XLN60026 Power supply
- User Manual
- AC power cord
- Certificate of Calibration
- Test Report
- Rackmount kit

Verify that all items above are included in the shipping container. If anything is missing, please contact B&K Precision.

ManualsPlus.com

1.5 Environmental Conditions

1. Do not locate or operate this product in an environment with dust, vibration, or corrosive gas and do not expose this product directly to the sunlight. Operate it in an environment with temperature 0--40°C & relative humidity 20%--80%. Pause the operation when ambient temperature is over 40°C; undo the operation only after the ambient temperatures drops to the acceptable temperature range. Operating temperature over the above range would damage the instrument.
2. This product is equipped with one blow-out type cooling fan on the back board and three in-take cooling fans on inner side of front board. Provide room for good ventilation near the cooling fans and keep the boards with a space above 10 cm away from the wall. To maintain good accuracy, do not block the ventilation holes in the front and the rear parts of the unit.
3. Although the product is designed with filters to minimize noise from AC power source, it is recommended that it be operated in a low power noise environment with proper earth ground. If the power noise is unavoidable, please install a power filter.

1.6 Storage

The storage temperature range of this product is within -10ºC - 70ºC and R.H. should be within 80% without moisture condensing. If not operating this product for a long time interval, pack it with original packaging or similar one and put it in a dry place without exposure to direct sunlight.

ManualsPlus.com

1.7 Installing Rackmount Brackets

The power supply is designed to fit in a space of one rack unit (1U) and can be mounted in a standard 19-inch rack panel or cabinet. Rack mount brackets must be assembled before mounting the unit in a rack. Refer to the following figure to assemble the rack mount brackets.

Rack mount Brackets

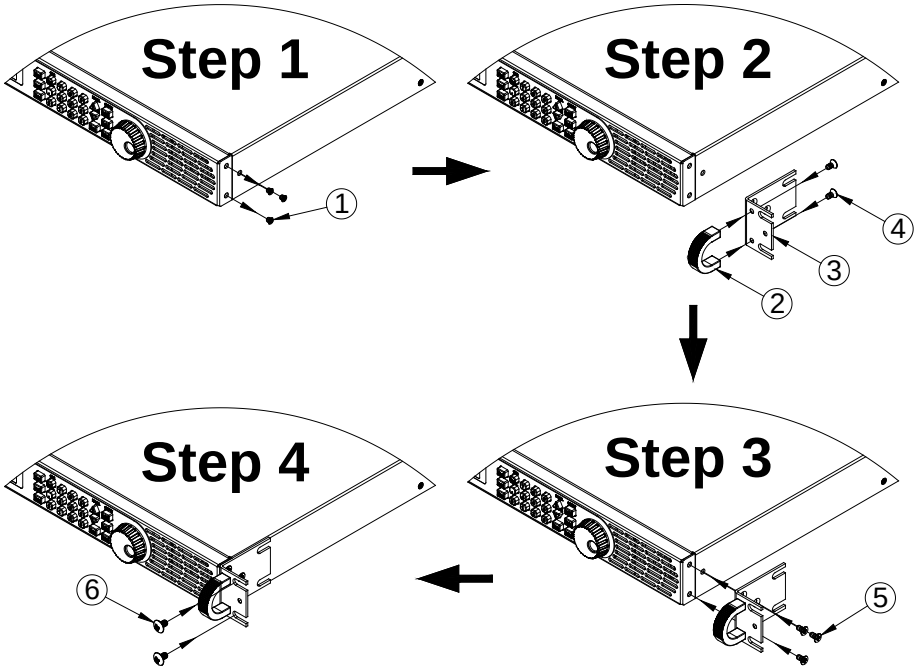

ManualsPlus.com

1.8 Removing Protective Covers

Output Protection Covers

Safety regulation requests protective cover when the output voltage is higher than 45 VDC. Therefore, there are protective covers for the output connector of the power supply. Refer to the following figure for the assembly/disassembly of the output protective cover.

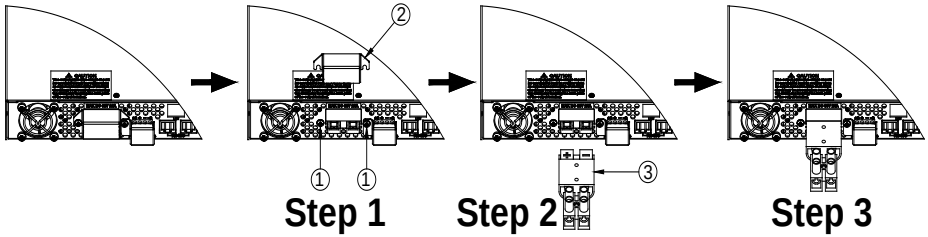

Remote Sense Protection Covers

Safety regulation requests protective cover when the voltage is higher than 45 VDC. Therefore, there are protective covers for the remote sense connector of the power supply. Refer to the following figure for the assembly/disassembly of the remote sense protective cover.

ManualsPlus.com

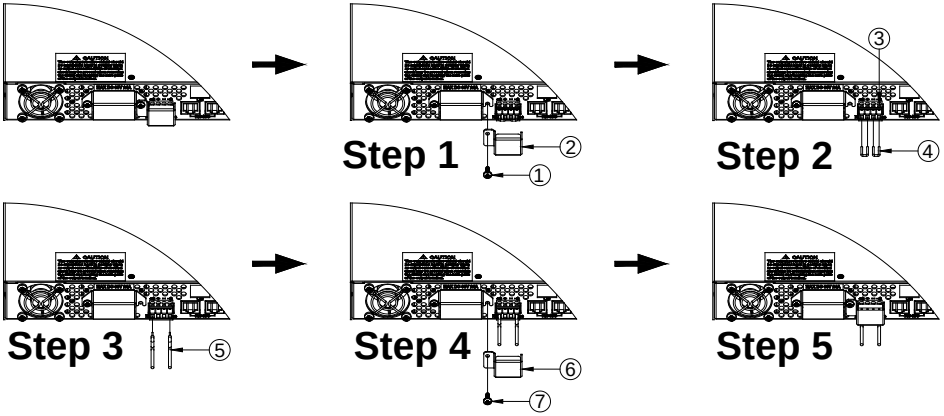

1.9 Connecting AC Input

The power supply's AC input is rated for 100 V – 240 V, with frequency of 47 Hz – 63 Hz. Before connecting to an external AC power source, be sure that the power switch is in the OFF state and use the supplied power cord assembly. connected.

> **Warning:**
>
> **SHOCK HAZARD The power cord provides a chassis ground thought a third conductor. Verify that your power outlit is of the three-conductor type with the correct pin connected to earth ground.**

Follow the illustrations below to connect the AC power cord to the AC input of the power supply in the rear panel.

1. First, connect the input receptacle (green terminal block) of the cable to the input terminals of the power supply.

2. Align the power cord housing mounting holes on the left and right side

ManualsPlus.com

to the screw holes on the power supply.

3. Use only the included screws to fasten and secure the cable housing assembly

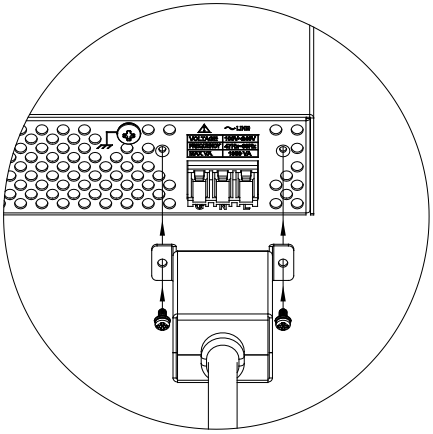

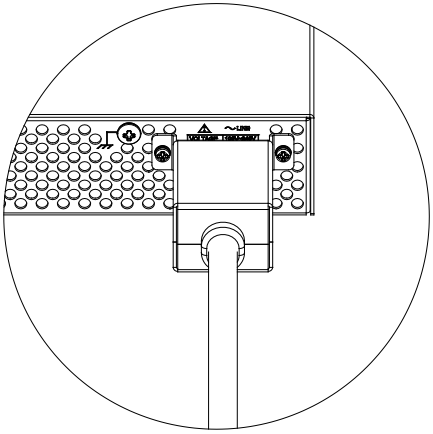

Warning:

The power cord supplied with this product is certified for safety. In case the supplied cable assembly needs to be replaced, or an extension cable must be added, be sure that it can meet the required power ratings of this product. Any misuse voids the warranty of this product.

Refer to the descriptions below to connect the other end of the AC power cord to the AC distribution panel.

ManualsPlus.com

Warning:

The power cord supplied with this product is certified for safety. In case the supplied cable assembly needs to be replaced, or an extension cable must be added, be sure that it can meet the required power ratings of this product. Any misuse voids the warranty of this product.

Connect the three terminals L(Black→Line), N(White→Neutral), and G(Green→Ground) on the other end of the power cord to your AC distribution panel.

CAUTION: Connection of this power supply to an AC power source should be made by a qualified electrician or other qualified personnel. Incorrect wiring may damage the power supply or cause a fire hazard.

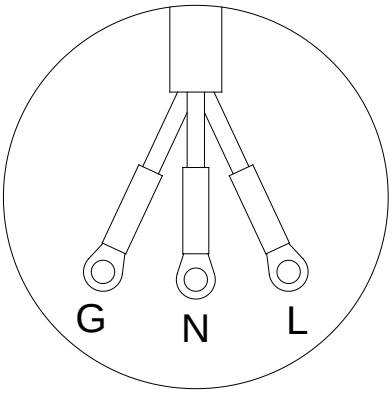

Warning:

SHOCK HAZARD turn off AC power before making rear panel connections. All wires must be properly connected with screws securely tightened

ManualsPlus.com

1.10 Fuses

This product is a switching mode power supply. The fuse installed inside should not break under normal operation. In case the fuse is blown, it may indicate a malfunction in the unit. In this event, contact B&K Precision.

> **Warning:**
>
> **Any disassembling of the casing or changing the fuse not performed by an authorized service technician will void the warranty of the instrument.**

1.11 Warm-up Time

The XLN series is fully operable upon switching the power on. However, to reach the specified equipment accuracy, please allow the supply to warm up for at least 15 minutes.

1.12 Power-off Procedure

When the supply is not in use, be sure to turn the power switch on the panel to the OFF position to turn off the power. After the power switch is turned to the OFF position, the inner fans will still run for approximately 10-15 seconds to carry on the inside electric capacitor discharge process per safety code requirement. Once the discharge process is complete, this product will carry out the automatic shut-down process.

1.13 Caution

A. Do not connect multiple power supplies in series as it may cause damage or malfunction.

B. While in parallel connection mode, the output voltage of each power supplies should be set to equal values. If the setting value of each unit is not the same, the higher output voltage will feed back to the smaller unit and damage its internal components.

C. When the AC input voltage is lower than the full-load voltage which is 100 VAC, the supplies will activate an inner overtemperature protector and cut off the output in response to the condition. To ensure that the entire test process can be completed smoothly, confirm that the input AC

ManualsPlus.com

voltage is within the specified range.

ManualsPlus.com

2. Front Panel Operation

2.1 Front Panel Overview

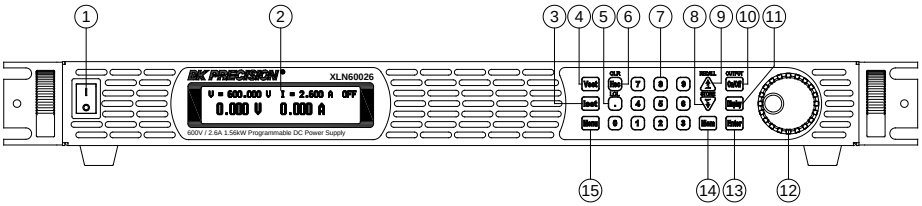

(1) Power switch:

Turns on the main power to the power supply.

(2) Display:

192x32 Graphic LCD Module

(3) Current setting (Iset):

Press (Iset) to set up the current limit.

(4) Voltage setting (Vset):

Press (Vset) to set up the output voltage.

(5) Dot/Local (•):

This button is applied as a decimal point. It is also used to revert back to LOCAL mode when the unit is in REMOTE mode. If the instrument is in LOCK mode, press this button to unlock.

(6) ESC/CLR (Esc):

Press this button to clear up numerical settings. It is also used to go

ManualsPlus.com

back to previous menu options or exit the menu.

(7) Numerical keys (0) - (9):

They are used to directly input the voltage or current value or choose a setting option in the menu.

(8) Down/Right/Store (↓):

This key is a multi-function key for the following three functions:

Down: When in the menu settings, use this "Down" key to move cursor to the next option below.

Right: When output is enabled and VSET or ISET is pressed, this key will adjust the cursor position to the right for setting voltage or current respectively.

Store: When MEM is pressed, use this key to store the voltage and current setting to the selected memory location.

(9) Up/Left/Recall (↑):

This key is a multi-function key for the following three functions:

Up: When in the menu settings, use this "Up" key to move cursor to the previous option above.

Left: When output is enabled and VSET or ISET is pressed, this key will adjust the cursor position to the left for setting voltage or current respectively.

Recall: When MEM is pressed, use this key to recall the voltage and current setting to the selected memory location.

(10) Output (On/Off):

Enables (ON) or disables (OFF) the main DC output in the rear panel.

(11) Display (Display):

In the menu, press (Display) to return to main screen or toggle the display to show voltage and current or power and load resistance as shown below:

ManualsPlus.com

```
V = 100.00 V   I = 1.0000 A   OFF
   0.00 V   0.0000 A
```

```
V = 100.00 V   I = 1.0000 A   OFF
   0.00 W      0.0 Ω
```

(12) Rotary knob:

Use this knob to adjust voltage or current when the output is ON (press (Enter) first to let cursor display first).

(13) Enter (Enter):

This key is used to confirm any changes to the settings within the menu or the voltage and current setting value.

(14) Mem (Mem):

Press this key to access the instrument settings memory location. Users can then use the numerical key or knob to select the memory location to save or recall the voltage and current configuration by pressing the STORE or RECALL key. 10 memory locations are available.

```
MEM = 0                    OFF
  0.000 V    0.000 A
```

(15) Menu (Menu):

Use this key to enter the power supply's menu. Users can press (↑) or (↓) key to browse through select the options in the menu list or use the numerical keys to enter the corresponding menu option number in the list.

ManualsPlus.com

2.2 Menu Settings and Configuration

```
1 . SYSTEM SETTING
2 . OUTPUT SETTING
3 . PROTECTION                ▼
```

```
4.PARALLEL                    ▲
5.INFORMATION
6.SPECIAL TEST FUNC           ▼
```

```
                              ▲
7 . TIMER CONTROL
8 . CALIBRATION
9 . CHAIN SETTING
```

1. SYSTEM SETTING:

Pressing (1) key in the first page of Menu Setting will enter the following "SYSTEM SETTING" menu.

```
REMOTE CONTROL= USB
GPIB ADDRESS  =  1
HOT KEY       = OFF           ▼
```

REMOTE CONTROL: Choose the remote interface

(USB/GPIB/ETHERNET)

*GPIB and ETHERNET available only on models with "-GL" suffix

ManualsPlus.com

*USB control requires installing USB drivers first. Download USB driver from www.bkprecision.com

***USB interface is a virtual COM port. The settings are:**

Baudrate	**: 57600 bps**
Data bit	**: 8**
Parity check	**: none**
Stop bit	**: 1**

*When entering the Remote mode, the screen will present RMT indicator as shown in the following picture.

GPIB ADDRESS: Set up GPIB ADDRESS (1-30)

HOT KEY: This enables/disables the hot key function, which allows you to quickly recall instrument settings that are stored into internal memory locations. The "HOT" indicator will be displayed when hot key is enabled. Press any numeric keys 0 – 9 to instantly recall the voltage/current settings from the corresponding memory location.

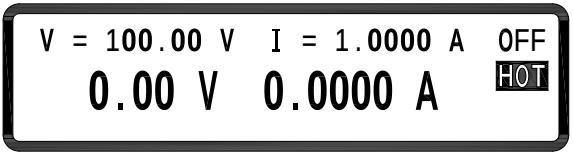

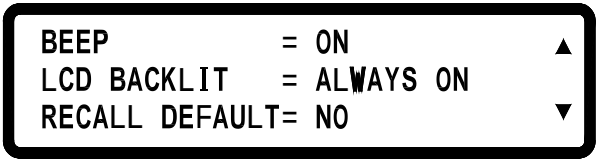

BEEP: Turns the Buzzer ON/OFF

LCD BACKLIT: Set the backlight of the LCD to Always ON or OFF after 1/5/10/30 minutes

ManualsPlus.com

RECALL DEFAULT: Restores the manufacturer default settings

KEY LOCK: While exiting the setting screen after enabling KEY LOCK, all keys except the [•] key are locked. Only this key can disable KEY LOCK.

*Simultaneously pressing both [↑] and [↓] keys in the main screen can also lock keys.

*While entering KEY LOCK state, the display will show an LCK indicator in the bottom right corner.

```
KEY LOCK        = OFF          ▲
POWER ON STATE  = OFF
V=  0.00 V, I=  0.000 A,O= OFF
```

POWER ON STATE: Users can set the output state of the supply when it is powered on. When OFF is selected, the power on state configuration will not be recalled. If LAST is selected, then at power on the supply will configure to the last settings before it was turned off previously. If USER (user defined) is selected, a prompt will ask for setting output voltage, current, and output state. Once set, these values will then apply during the next power up.

```
IP CONFIG       = STATIC          ▲
IP ADDRESS      = 255.255.255.255
KEY LOCK        = OFF             ▼
```

IP CONFIG: **STATIC :** User can input IP address
DHCP : not supported

IP ADDRESS: Users can enter a static IP address here.

ManualsPlus.com

Note: If you are not sure of the IP settings, consult your network administrator.

2. OUTPUT SETTING:

Press (2) in the first page of the menu to enter OUTPUT SETTING menu.

```
VOLT LIMIT MAX   =  _300.50 V
CURR LIMIT MAX   =   4.5000 A
VOLT LIMIT MIN   =    0.000 V
```

```
CURR LIMIT MIN   =    0.010 A
VOLT SLEW RATE   =    3.300 V/mS
CURR SLEW RATE   =  0.0520 A/mS
```

VOLT LIMIT MAX: Upper limit of the output voltage setting

XLN15010 – 150.5 V max.

XLN30052 – 300.5 V max.

XLN60026 – 600.5 V max.

CURR LIMIT MAX: Upper limit of the output current setting

XLN15010 – 10.45 A max.

XLN30052 – 5.25 A max.

XLN60026 – 2.65 A max.

VOLT LIMIT MIN: Lower limit of the output voltage setting. 5 V min. for all models.

CURR LIMIT MIN: Lower limit of the output current setting

XLN15010 – 0.04 A min.

XLN30052 – 0.02 A min.

XLN60026 – 0.01 A min.

VOLT SLEW RATE: Voltage ascending/descending slope

ManualsPlus.com

XLN15010 – 0.01 – 1 V/ms

XLN30052 – 0.01 – 3.3 V/ms

XLN60026 – 0.01 – 6.6 V/ms

CURR SLEW RATE: Current ascending/descending slope

XLN15010 – 0.001 – 0.104 A/ms

XLN30052 – 0.001 – 0.052 A/ms

XLN60026 – 0.001 – 0.026 A/ms

3. PROTECTION SETTING (PROTECTION)

Press (3) key in the first screen of the menu to enter PROTECTION menu.

```
OVP = OFF      SET =   306.00 V
OCP = OFF      SET =   5.3040 A
OPP = OFF      SET =  1560.00 W ▼
```

OVP: Enables/disables overvoltage protection

SET: Set up the overvoltage protection point.

OCP: Enables/disables overcurrent protection

SET: Set up the overcurrent protection point.

OPP: Enables/disables overpower protection

SET: Set up the overpower protection point.

```
CV TO CC= OFF   ▲
CC TO CV= OFF
```

CV TO CC: Enables/disables the protection of the change from CV to CC mode

CC TO CV: Enables/disables the protection of the change

ManualsPlus.com

from CC to CV mode

4. PARALLEL SETTING

Press (4) in the second screen of the menu to enter PARALLEL menu.

```
ON/OFF        = OFF
MASTER/SLAVE = MASTER
```

ON/OFF: Enables or disables the parallel mode.

MASTER/SLAVE: Refer to "Parallel Setting" section for the detailed setting procedure to use MASTER/SLAVE mode.

Note: Up to four power supplies of the same models may be connected in parallel.

5. INFORMATION

Press (5) in the second screen of the menu to enter INFORMATION screen.

```
MODEL NAME        : XLN30052
FRAME F/W VER.    : 1.00
MODULE F/W VER.   : M:1.0TD  S:1.0TD
```

6. SPECIAL TEST FUNCTION

Press (6) in the second screen of the menu to enter SPECIAL TEST

ManualsPlus.com

FUNCTION menu.

```
1.PROGRAM MODE
2.EXTERNAL CONTROL
```

PROGRAM MODE: Press (1) to enter the PROGRAM MODE screen.

```
PROGRAM NUMBER  = _1
        PROGRAM OFF
```

This mode allows the user to run list mode (sequences) that are stored within the internal program mode memory. Prior to using this function, the user needs to edit the list steps through the USB or GPIB interface and load it into a program memory location. Users can save up to 10 programs (program number 1 through 10) internally and recall them using this Program Mode option by selecting the program number and then pressing (On/Off) to execute the program.

EXTERNAL CONTROL: Press (2) to enter the EXTERNAL CONTROL menu.

```
EXTERN VOLT CONTROL = VOLT
EXTERN CURR CONTROL = VOLT
EXTERN PROGRAM = 10V/10K
```

```
EXTERN MONITOR = 10V
EXTERN SHUT-OFF = OFF/LOW
EXTERN ENABLE = NOTACTIVE
```

ManualsPlus.com

Users can enable/disable external control in this menu option. An external voltage source (VOLT) or resistor (RES) can be used to control the output voltage and current. The external voltage/resistance can be either 0 - 10V/0 - 10K (10V/10K) or 0 - 5V/0 - 5K (5V/5K). Users can also monitor the output status by reading the monitoring pins (0 - 10V or 0 - 5V) of the external analog control interface.

7. TIMER CONTROL

Press (7) in the third page of menu to enter TIMER CONTROL screen.

```
TIMER = OFF
TIME =   0 Hr  0 Min  0 Sec
```

TIMER: Turn on/off TIMER function.

TIME: Set up OUTPUT ON time (Max:999Hr 59Min 59Sec)

8. CALIBRATION

Press (8) in the third page of the menu to enter CALIBRATION menu. Users must enter the password to access calibration mode. For calibration details, see “Calibration” chapter.

```
PLEASE KEYIN PASSWORD:_
```

9. Series Connection Control Setting (CHAIN)

Press (9) in Menu setting page to enter CHAIN SETTING

ManualsPlus.com

page.

```
CHAIN ON/OFF  = OFF
CHAIN ADDRESS =  1
```

CHAIN ON/OFF: **On/Off Series Connection Mode**

CHAIN ADDRESS: **Setting Address (1 – 30)**

For detailed setting information, please refer to **“**Multi-unit Connection Mode (RS485)” section**.**

ManualsPlus.com

2.3 Rear Panel Overview

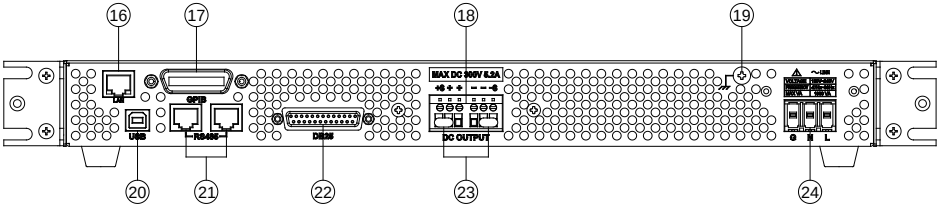

(16) LAN (Ethernet) Interface:

RJ-45 LAN connector for remote communication.

(17) GPIB Interface:

GPIB connector for remote communication.

(18) Main Output (+ + - -):

The main output of the power supply.

(19) Earth connection:

Used for earth ground connection.

(20) USB Interface:

USB interface for remote communication.

(21) RS485 Interface:

While operating in parallel connection or multi unit connection (CHAIN) mode, the RS485 interface can be used for communication and synchronization between master and slave.

(22) Analog Interface:

Remote analog control interface allows for programming and monitoring the power supply's output with external analog controls.

(23) RMT/LCL Sense:

When Remote sense is selected, the wire connection can be set up as follows: positive sense (+S) and positive lead (+) of the DC output are connected to the positive end (+) of the device, whereas negative sense

ManualsPlus.com

(-S) and negative lead (-) of the DC output are connected to the negative end (-) of the device under test. This connection will compensate the voltage dropped due to current flow through long power wires (the maximum compensation voltage is 2 V or 5 V depending on the model).

(24) AC power input:

The power receptacle is rated for a power input within 100 VAC - 240 VAC.

ManualsPlus.com

Operation Instructions

2.4 Voltage Setting

Press (Vset) and set the output voltage by pressing the numerical keys directly, and then press (Enter) to confirm the setting.

```
V =_        V  I = 1.0000 A  OFF
  0.00 V  0.0000 A
```

2.5 Current Setting

Press (Iset) and set the output current (current limit) by pressing the numerical keys directly and then press (Enter) to confirm the setting.

```
V = 100.00 V  I =_        A  OFF
  0.00 V  0.0000 A
```

2.6 Overvoltage Protection OVP

Press (Menu) to enter the Configuration menu and press (3) to enter the PROTECTION setting menu. Then, using the knob set OVP to ON and press (Enter) to confirm it. Now the cursor will move to the value setting for the OVP on the right hand side. Enter the OVP value here by pressing the numerical keys.

```
OVP = ON     SET =   306.00 V
OCP = OFF    SET =   5.3040 A
OPP = OFF    SET = 1560.000 W ▼
```

ManualsPlus.com

2.7 Overcurrent Protection OCP

Press (Menu) to enter the "Configuration" menu and press (3) to enter the PROTECTION setting screen. Then, use the knob to set OCP to ON and press (Enter) to confirm it. Now the cursor will move to the value setting for the OCP on the right hand side. Enter the OCP value by pressing the numerical keys.

```
OVP = ON      SET =   306.00 V
OCP = ON      SET =   5.3040 A
OPP = OFF     SET = 1560.000 W ▼
```

2.8 Overpower Protection OPP

Press (Menu) to enter the "Configuration" menu and press (3) to enter the PROTECTION setting screen. Then, use the knob to set OPP to ON and press (Enter) to confirm it. Now the cursor will move to the value setting for the OCP on the right hand side. Enter the OPP value by pressing the numerical keys.

2.9 Voltage Output

After the voltage, current and protection settings are entered, press (On/Off) to output voltage. User will be able to recognize the setting values and the actual output values from the LCD.

```
V = 100.00 V  I = 1.0000 A   CV
 99.99 V  0.0000 A
```

2.10 Control Voltage Output with Rotary knob

When the output is ON, a user may still increase or decrease the output voltage

ManualsPlus.com

by turning the rotary knob. Press (Enter) and the cursor appears in response; press (↑) or (↓) to move the cursor to the digit you want to change and turn the knob to increase or decrease the output voltage value at the cursor. The changes of the voltage setting and the output voltage will immediately apply.

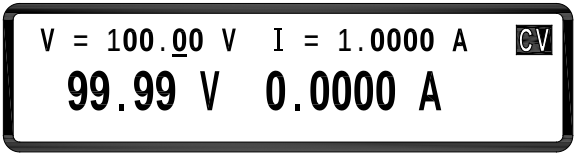

2.11 Timer Function

When the "Timer Setting" function is ON, it will activate the timer. After the timer setting is made, return to the main screen. Set up the output current & voltage and press (On/Off) to output. The screen will show the countdown of the timer. Once it reaches zero, the supply will turn off the output automatically.

2.12 Parallel Mode Setting

The power supplies can be connected in parallel (up to 4 units of the same model) to increase the power output capability and to increase the total output current. With 4 units connected, up to 6240 W maximum can be output. Below is a diagram showing 4 units connected in parallel.

ManualsPlus.com

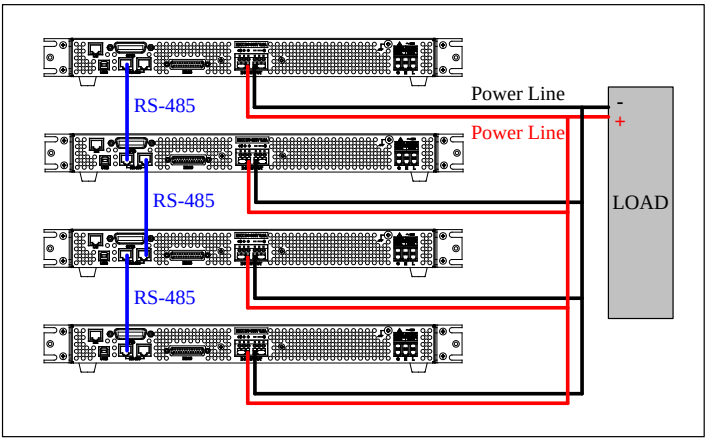

After wiring is complete, configure one of the supplies as the Master and the other three as Slave A, B, and C. After one of the supplies is configured to be the Master, it will start searching for all Slaves that are connected to the Master. To operate correctly, the user must set up the Slaves before the Master.
To set a supply to slave mode, press (Menu), (↓), and (4) in the main screen to enter the PARALLEL SETTING option. Then select the parallel mode by turning the knob and then press (Enter) to confirm. It will continue to the next line for the MASTER/SLAVE selection. Turn the knob to select SLAVE A for the supply and press (Enter) to confirm the setting. Using the same procedure, set up SLAVE B and C for two other supplies as shown below.

```
ON/OFF        = ON
MASTER/SLAVE  = SLAVE A
```

To set the master unit, press (Menu), (↓), **and** (4) in the main screen to enter the PARALLEL SETTING option. Then use the knob to select the parallel mode and press (Enter) to confirm. It will continue to the next line for the MASTER/SLAVE selection. Use knob again to select MASTER and then press (Enter) to confirm. Once the supply is confirmed as the Master supply, it will start searching for all other Slaves connected, as shown below:

ManualsPlus.com

```
ON/OFF        = ON
MASTER/SLAVE = MASTER
CHECKING FOR SLAVE...
```

If the wiring is correct, the following screen will appear:

```
ON/OFF        = ON
MASTER/SLAVE = MASTER
FOUND SLAVE : A B C
```

After receiving the control command from the Master, all Slaves will be locked on to the SLAVE screen. At this point all keys except (•) are locked so that slaves cannot be operated from the front panel keys except controlled by the Master as shown below:

```
MODE : PARALLEL  ERR : NONE
        SLAVE A
```

Once the Master and Slave settings are completed, users will only have to operate the Master supply to set up the combined output voltage and current.

To exit parallel mode, press (•) (LCL) to access the PARALLEL SETTING screen and turn the knob to select OFF for ON/OFF to disable the parallel operation mode and return to the local operation mode. This will return individual control to each power supplies. Do not change the operation mode while the supplies' outputs are ON, otherwise communication failure will occur and and an error message will be displayed

2.12.1 Error Message of Parallel Connection

If the RS485 wiring is wrong or the signal is not correct, the Master will display the following message:

ManualsPlus.com

```
ON/OFF        = ON
MASTER/SLAVE = MASTER
FOUND SLAVE : NONE
```

If more than one Master is being set to parallel mode, the following message will be displayed.

```
ON/OFF        = ON
MASTER/SLAVE = MASTER
MULTI-MASTER,PLEASE CHECK AGAIN
```

After the master is configured, if it cannot communicate with one of the slave supplies, the following error message will be displayed (example showing Slave A)

```
SLAVE A
COMMUNICATION ERROR!!!
```

After finishing the set up, if a Slave receives only the output command sent by the Master but does not receive the synchronization signal, it will present the following error messages. The error message “SYNC ON” is shown when the slave is not receiving the synchronous output ON signal. The error message “SYNC OFF” is shown when the slave is not receiving the synchronous output OFF signal.

```
MODE : PARALLEL  ERR : SYNC ON
SLAVE A
```

ManualsPlus.com

```
MODE : PARALLEL  ERR : SYNC OFF
SLAVE A
```

2.13 External Analog Interface

A DB25 analog interface connector is available in the rear panel for analog control. The output voltage or output current can be controlled by an external voltage source or resistor connected to the appropriate pins on this connector. The range of the external voltage could be either 0 ~ 10 VDC or 0 ~ 5 VDC and the range of the external variable resistance could be either 0 ~ 10 kΩ or 0 ~ 5 kΩ. In addition, users can monitor the output status by reading back the monitoring pins of the analog interface connector.

2.13.1 Analog Interface Pin Assignment

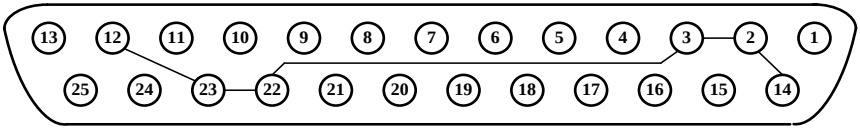

No	Name	I/O	No	Name	I/O
1	Enable +	I	14	Enable – (Common)	
2	GND (Common)		15	Shut-Off	I
3	GND (Common)		16	Power OK	O
8	Local/Analog	I	21	Local/Analog State	O
9	Voltage Program	I	22	GND (Common)	
10	Current Program	I	23	GND (Common)	
11	Voltage Monitor	O	24	Current Monitor	O
12	GND (Common)		25	Parallel	O
13	CV/CC	O			

ManualsPlus.com

2.13.2 Functions

Enabling/Disabling External Control

To enable external control, you must first access MENU 6-SPECIAL TEST FUNC → 2. EXTERNAL CONTROL, and change the setting on [EXTERN ENABLE =] to [ACTIVE] , as shown in the figure below.
This must be done prior to executing all the functions (i.e. Enable +/-, Shut-Off, Local/Analog, Voltage/Current Program, Voltage/Current Monitor, etc.)

EXTERN MONITOR= 10V
EXTERN SHUT-OFF= OFF / LOW
EXTERN ENABLE= ACTIVE

Enable +/-

This controls the behavior of the power supply's output or the front output On/Off button.
To configure its function, press MENU 6-SPECIAL TEST FUNC → 2. EXTERNAL CONTROL
Go to the second page of the menu to see the below screen:

SET ENABLE +/- TO = A MODE

ManualsPlus.com

A MODE:
This allows the output On/Off button to be enabled or disabled.

When pin 1 and 14 are **opened**, the output On/Off button is disabled and the power supply's output will remain OFF. Pressing the On/Off button will not turn ON the output, and the LCD screen will also display ENA .

V = 300.00 V	**I = 1.000 A**	**OFF**
0.00 V	**0.000 A**	**ENA**

When pin 1 and 14 are **shorted**, the output On/Off button is enabled. This will enable the output On/Off button to allow front panel control of the output state. If the display ENA is on the LCD screen, press ESC once so that it disappears before attempting to press the output On/Off button.

B MODE:
This allows enabling or disabling the power supply's output using the analog interface pins 1 and 14. It will also disable the output On/Off button.

When pin 1 and 14 are **opened**, the output will be OFF.

When pin 1 and 14 are **shorted**, the output will be ON.

ManualsPlus.com

EXTERN ENABLE	Enable +/Enable -	Output	Output On/Off button	Display
NOT ACTIVE (by Default)	Not Active	On		----
ACTIVE (A Mode)	Opened	Off	Disabled	ENA
	Shorted	On/Off	Enabled	----
ACTIVE (B Mode)	Opened	Off	Disabled	----
	Shorted	On	Disabled	----

Note:
When changing from **A MODE** to **B MODE**, change **EXTERN ENABLE** to **NOT ACTIVE** first to disable analog control, then change to **B MODE**. Afterwards, exit the menu to verify that the ENA indicator is no longer displayed before going back to the menu to reset **EXTERN ENABLE** to **ACTIVE**.

Shut-Off

Pin 15 can be used to shut off the power supply's output, controlled by an input trigger signal. The output shuts off with the falling edge or rising edge of the trigger. This is selectable from the menu by pressing MENU 6-SPECIAL TEST FUNC → 2. EXTERNAL CONTROL. Choose between OFF/LOW (for falling edge trigger) or ON/LOW (for rising edge trigger).

Falling-edge trigger

EXTERN MONITOR= 10V
EXTERN SHUT-OFF= OFF / LOW
EXTERN ENABLE= ACTIVE

ManualsPlus.com

Rising-edge trigger

EXTERN MONITOR= 10V
EXTERN SHUT-OFF= ON / LOW
EXTERN ENABLE= ACTIVE

When Shut Off occurs, the output will be turned off immediately and SO will appear on the LCD display (as shown in the figure below). To enable the output again, first set the pin's input voltage back to the original voltage setting (for falling-edge trigger, set back to high level (5V), and low level (0V) for rising-edge trigger). Then, press ESC (to deactivate the SO status) before pressing the On/Off button again to enable the output.

V = 300.00 V **I = 1.000 A** **OFF**
0.00 V **0.000 A** **SO**

Note: Shut Off can only occur when the power supply receives an edge trigger. Maintaining that pin constantly at a High level or Low level will not trigger a Shut Off.

ManualsPlus.com

EXTERN ENABLE (menu config.)	EXTERN SHUT-OFF (menu config.)	Shut-Off (pin 15)	Output	Display
NOT ACTIVE (by Default)	OFF / LOW	NOT ACTIVE	On	*No Display*
	ON / LOW	NOT ACTIVE	On	*No Display*
ACTIVE	OFF / LOW	High-to-Low	Off	SO
	ON / LOW	Low-to-High	Off	SO

CV/CC

Pin 13 can be used to monitor the power supply output mode. The pin will output a High level (5V) under CV mode, and Low level (0V) under CC mode.

level	CV/CC	Output Mode	Display
	High	Constant Voltage	CV
	Low	Constant Current	CC

Local/Analog

Pin 8 can be used to select the control mode (Local or Analog) of the power supply's output. When the input command for this pin is at High level (or open), the control mode will be Local. When input command for this pin is at Low level (or connected to common GND), the control mode will be Analog. In analog mode, setting and measurement resolution for voltage and current will be less than local mode. See the below figures as an example.

ManualsPlus.com

Local Control

V =	**300.00**	**V**	**I =**	**1.000**	**A**	**OFF**
	0.00 V			**0.000 A**		

Analog Control

V =	**300.0**	**V**	**I =**	**1.00**	**A**	**OFF**
	0.0 V			**0.00 A**		

EXTERN ENABLE	**Local/Analog pin state**	**Output control**	**Display**
NOT ACTIVE (by Default)	NOT ACTIVE	Local	***NO DISPLAY***
ACTIVE	High (5V)	Local	
	Low (0V)	Analog	

Local/Analog State

Pin 21 can be used to indicate the current output control mode of the power supply (Local or Analog state). In Local state, this pin will output a High level (5V) signal, and in Analog State, this pin will output a Low level (0V) signal.

ManualsPlus.com

Local/Analog pin State	Output Control	Display
High (5V)	Local	***NO DISPLAY***
Low (0V)	Analog	

Power OK

Pin 16 can be used to indicate whether a fault condition is present in the power supply. Normally this pin will output a High level (5V). When a fault occurs, this pin will output a Low level (0V).
Fault conditions are defined as follows:

1. Overvoltage Protection
2. Overcurrent Protection
3. Overtemperature Protection
4. AC Line Failure
5. Enable Signal
6. Shut-Off Signal
7. Remote Failure
8. Output Off

Voltage Program - Voltage Mode

This function allows you to program the voltage output by connecting an external DC voltage to Pin 9. For this function to be enabled, the output control must be in Analog mode. The external voltage range used to control the full scale of the output voltage can be selected between 0 – 10 V or 0 – 5 V range. Then, access MENU 6-SPECIAL TEST FUNC → 2. EXTERNAL CONTROL to set [EXTERN VOLT CONTROL =] to [VOLT], as shown in the figure below.

EXTERN VOLT CONTROL= VOLT
EXTERN CURR CONTROL= VOLT
EXTERN PROGRAM= 10 V / 10 K

ManualsPlus.com

Under voltage mode, you may set the power supply's voltage output value through Pin 9.

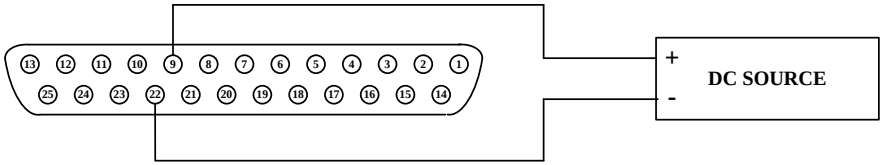

You can access MENU 6-SPECIAL TEST FUNC → 2. EXTERNAL CONTROL to choose the input voltage range [EXTERN PROGRAM] to [10 V / 10K] for 0 – 10V or [5V / 5 K] for 0 – 5V.

EXTERN VOLT CONTROL= VOLT
EXTERN CURR CONTROL= VOLT
EXTERN PROGRAM= 10 V / 10 K

Voltage Program – Resistor Mode

This function allows you to program the voltage output by connecting an external resistance to Pin 9. For this function to be enabled, the output control must be in Analog mode. The external resistance range used to control the full scale of the output voltage can be selected between 0 – 10 kΩ or 0 – 5 kΩ range. Then, access MENU 6-SPECIAL TEST FUNC → 2. EXTERNAL CONTROL to set [EXTERN VOLT CONTROL =] to [RES], as shown in the figure below.

EXTERN VOLT CONTROL= RES
EXTERN CURR CONTROL= VOLT
EXTERN PROGRAM= 10 V / 10 K

ManualsPlus.com

Pin 9 and GND Pin 22 can be connected with a resistor to set the power supply's output voltage value.

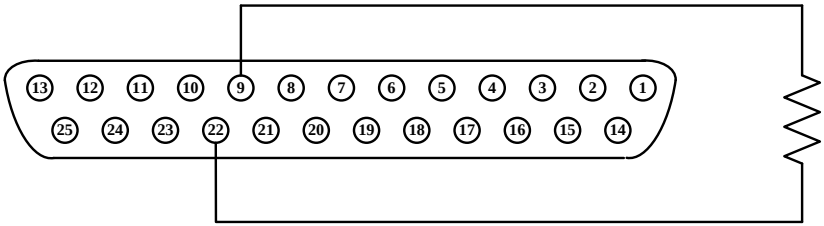

You may access MENU 6-SPECIAL TEST FUNC → 2. EXTERNAL CONTROL to choose the input resistance range at [EXTERN PROGRAM] to [10 V / 10 K] for 0 – 10 kΩ and [5 V / 5 K] for 0 – 5 kΩ.

EXTERN VOLT CONTROL= VOLT
EXTERN CURR CONTROL= VOLT
EXTERN PROGRAM= 10 V / 10 K

Current Program - Voltage Mode

This function allows you to program the current output by connecting an external DC voltage to Pin 10. For this function to be enabled, the output control must be in Analog mode. The external voltage range used to control the full scale of the output voltage can be selected between 0 – 10 V or 0 – 5 V range. Then, access MENU 6-SPECIAL TEST FUNC → 2. EXTERNAL CONTROL to set [EXTERN CURR CONTROL =] to [VOLT], as shown in the figure below.

EXTERN VOLT CONTROL= VOLT
EXTERN CURR CONTROL= VOLT
EXTERN PROGRAM= 10 V / 10 K

ManualsPlus.com

Under voltage control, you may input s DC voltage through Pin 10 to control the power supply's output current value.

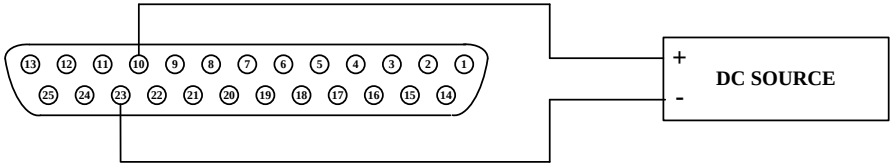

You may access MENU 6-SPECIAL TEST FUNC → 2. EXTERNAL CONTROL to choose the input voltage range at [EXTERN PROGRAM] to [10 V / 10 K] for 0 – 10V and [5 V / 5 K] for 0 – 5V.

EXTERN VOLT CONTROL= VOLT
EXTERN CURR CONTROL= VOLT
EXTERN PROGRAM= 10 V / 10 K

Current Program – Resistor Mode

This function allows you to program the current output by connecting a resistance to Pin 10. For this function to be enabled, the output control must be set to Analog mode. The external resistance range used to control the full scale of the output voltage can fall into the 0 – 10 kΩ or 0 – 5 kΩ range. Then access MENU 6-SPECIAL TEST FUNC → 2. EXTERNAL CONTROL to set [EXTERN CURR CONTROL =] to [RES], as shown in the figure below.

EXTERN VOLT CONTROL= VOLT
EXTERN CURR CONTROL= RES
EXTERN PROGRAM= 10 V / 10 K

Pin 10 and GND Pin 23 can be connected with a resistor to set the power

ManualsPlus.com

supply's output current value.

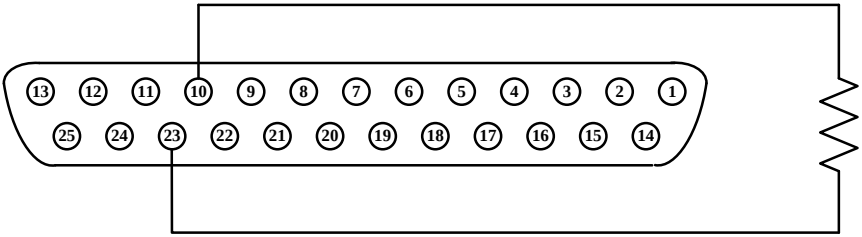

You may access MENU 6-SPECIAL TEST FUNC → 2. EXTERNAL CONTROL to choose the input resistance range at [EXTERN PROGRAM =] to [10 V / 10 K] for 0 – 10kΩ and [5 V / 5 K] for 0 – 5 kΩ.

EXTERN VOLT CONTROL= VOLT
EXTERN CURR CONTROL= VOLT
EXTERN PROGRAM= 10 V / 10 K

Voltage Monitor

This function allows you to monitor the voltage output using Pin 11 and one of the ground pins (i.e. Pin 22), which can be connected to a digital voltage meter (DVM). The supply must be in Analog mode to use this function. The monitoring the output voltage range (which reflects 0 to full scale of the supply's output voltage) can be selected between 0 – 10 V or 0 – 5 V. Shown in the figure below is the setup connecting to a DVM.

ManualsPlus.com

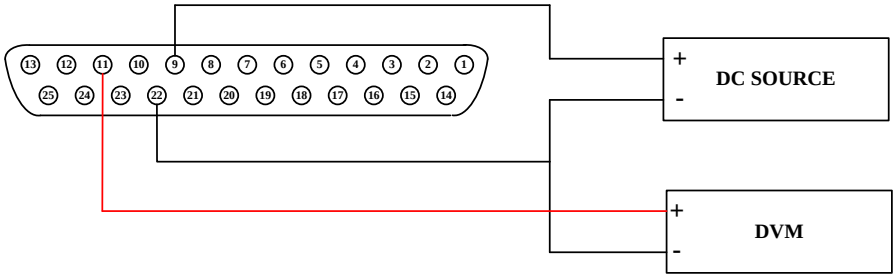

You may access MENU 6-SPECIAL TEST FUNC → 2. EXTERNAL CONTROL to choose the voltage monitor output range of Pin 11 at [EXTERN MONITOR=] to [10V] for 0 – 10 V (as shown in figure below) and [5V] for 0 – 5V.

EXTERN MONITOR= 10V
EXTERN SHUT-OFF= OFF / LOW
EXTERN ENABLE= ACTIVE

Current Monitor

This function allows you to monitor the voltage output using Pin 24 and one of the ground pins (i.e. Pin 22), which can be connected to a digital voltage meter (DVM). The supply must be in Analog mode to use this function. The monitoring output voltage range (which reflects 0 to full scale of the supply's output current) can be selected between 0 – 10 V or 0 – 5 V. Shown in the figure below is the setup connecting to a DVM.

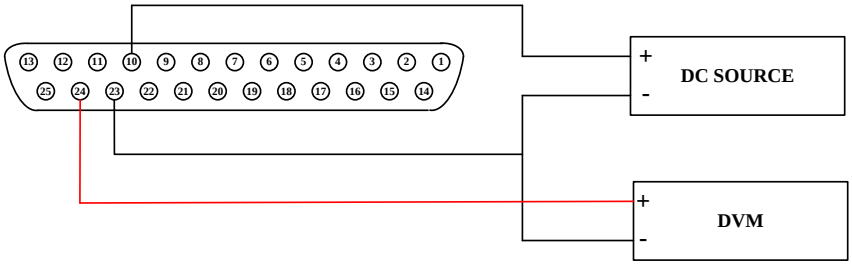

ManualsPlus.com

You may access MENU 6-SPECIAL TEST FUNC → 2. EXTERNAL CONTROL to choose the current monitor output range of Pin 24 at [EXTERN MONITOR] to [10 V] for 0 – 10 V (as shown in figure below) and [5V] for 0 – 5V.

EXTERN MONITOR= 10V
EXTERN SHUT-OFF= OFF / LOW
EXTERN ENABLE= ACTIVE

2.14 Programmable Sequence Mode (List mode)

The power supply provides the capability to support list mode, which allows users to download a small program (sequence list) to internal memory and execute it. There are 10 memory locations to allow storing up to 10 programs, and up to 150 steps are allowed in total (all 10 programs combined). This can only be programmed remotely via USB, GPIB, or LAN interface with remote commands or with the included software. For each program users can set up the number of times to repeat the program. For each step users may be able to set up the output voltage, current, and period of time (200 ms minimum) to stay on the step. Please refer to "Remote Communication Protocol" section for details of supported commands.

Below are some examples of commands used to set up a custom program in list mode.

ManualsPlus.com

Example 1:

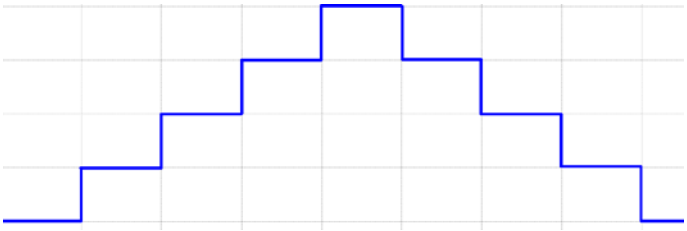

To output the waveform shown above, users may edit the program through the following commands:

PROG 1	Choose program number
PROG:CLE	Clear program 1 data
PROG:REP 0	No repeat (repeat one time for “1”)
PROG:TOTA 8	Set program 1 to have 8 steps in total
PROG:STEP 1	Following 3 settings are for step 1
PROG:STEP:CURR 2	Set output current to 2 ampere
PROG:STEP:VOLT 50	Output voltage is set to 50 volts
PROG:STEP:ONT 0.5	Output ON time is set to 0.5 sec
PROG:STEP 2	Following 3 settings are for step 2
PROG:STEP:CURR 2	
PROG:STEP:VOLT 100	
PROG:STEP:ONT 0.5	
PROG:STEP 3	Choose step 3
PROG:STEP:CURR 2	
PROG:STEP:VOLT 150	
PROG:STEP:ONT 0.5	
PROG:STEP 4	Choose step 4
PROG:STEP:CURR 2	
PROG:STEP:VOLT 200	
PROG:STEP:ONT 0.5	
PROG:STEP 5	Choose step 5
PROG:STEP:CURR 2	
PROG:STEP:VOLT 150	

ManualsPlus.com

PROG:STEP:ONT 0.5	
PROG:STEP 6	Choose step 6
PROG:STEP:CURR 2	
PROG:STEP:VOLT 100	
PROG:STEP:ONT 0.5	
PROG:STEP 7	Choose step 7
PROG:STEP:CURR 2	
PROG:STEP:VOLT 50	
PROG:STEP:ONT 0.5	
PROG:STEP 8	Choose step 8
PROG:STEP:CURR 2	
PROG:STEP:VOLT 0	
PROG:STEP:ONT 0.5	
PROG:NEXT 0	Select next program to run after program 1 is complete, 0 means stop
PROG:SAV	After edit, use Save command to store program 1 in the hardware
PROG 1 PROG:RUN ON	To run the program stored in the hardware, select program number and then use RUN ON command to execute the program.

ManualsPlus.com

Example 2:

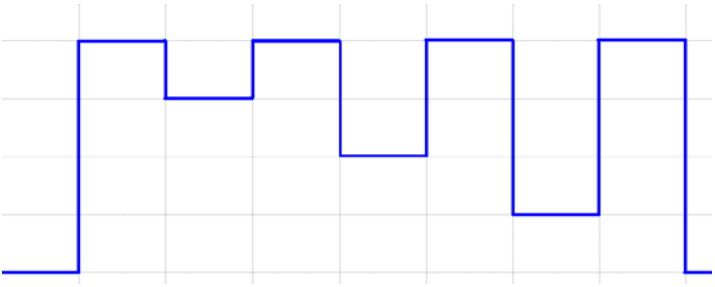

To output the waveform shown above, the following example program can be used.

PROG 2	Choose program number
PROG:CLE	Clear program 2 data
PROG:REP 0	No repeat after running this program
PROG:TOTA 8	Set program 2 to have 8 steps in total
PROG:STEP 1	Settings for step 1
PROG:STEP:CURR 2	Set output current to 2 amperes
PROG:STEP:VOLT 200	Set output voltage to 200 volts
PROG:STEP:ONT 0.5	Set output ON time to 0.5 sec
PROG:STEP 2	Choose step 2
PROG:STEP:CURR 2	
PROG:STEP:VOLT 150	
PROG:STEP:ONT 0.5	
PROG:STEP 3	Settings for step 3
PROG:STEP:CURR 2	
PROG:STEP:VOLT 200	
PROG:STEP:ONT 0.5	
PROG:STEP 4	Choose step 4
PROG:STEP:CURR 2	
PROG:STEP:VOLT 100	
PROG:STEP:ONT 0.5	
PROG:STEP 5	Choose step 5
PROG:STEP:CURR 2	
PROG:STEP:VOLT 200	
PROG:STEP:ONT 0.5	

ManualsPlus.com

PROG:STEP 6	Choose step 6
PROG:STEP:CURR 2	
PROG:STEP:VOLT 50	
PROG:STEP:ONT 0.5	
PROG:STEP 7	Choose step 7
PROG:STEP:CURR 2	
PROG:STEP:VOLT 200	
PROG:STEP:ONT 0.5	
PROG:STEP 8	Choose step 8
PROG:STEP:CURR 2	
PROG:STEP:VOLT 0	
PROG:STEP:ONT 0.5	
PROG:NEXT 0	Select next program to run after program 2 is complete, 0 means stop
PROG:SAV	After edit, use Save command to store program 2 in the hardware
PROG 2 PROG:RUN ON	To run the program stored in the hardware, select program number and then use RUN ON command to execute the program.

ManualsPlus.com

Example 3:

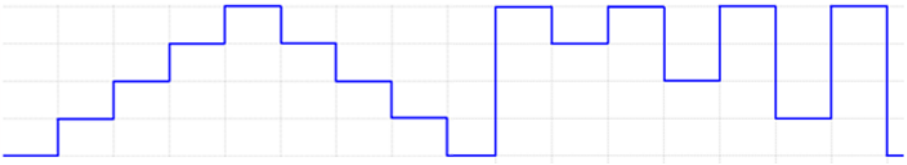

If the power supply needs to execute Program 2 right after Program 1 is executed, then program 1 can be modified with a NEXT 2 command. The following steps can be taken to modify and execute the programs.

PROG 1	Select program 1
PROG:NEXT 2	Change the NEXT command from NEXT 0 to NEXT 2
PROG:SAV	After edit is complete use Save command to store changes in the hardware
PROG 1 PROG:RUN ON	To run the program, select the program number first and then use RUN ON command to execute it.

ManualsPlus.com

2.15 Multi-unit Connection Mode (RS485)

The power supply, via the RS485 interface, provides multi-unit control function for up to 30 units (If connecting more than 10 units, please add a 120Ω resistor terminator to the last unit as shown in the figure below). Turn on the system after the connection is made. Press (Menu) → (9) on the main page and set CHAIN ON/OFF to ON (Parallel connection will be cancelled). Set each unit with a different Address (1 - 30). Then by using USB, GPIB, or LAN, connect the first power supply in the chain to a PC. Now, multiple units daisy-chained via RS485 can be controlled by one PC by using the commands specific for multi-unit connection. See “Remote Communication Protocol” section for details.

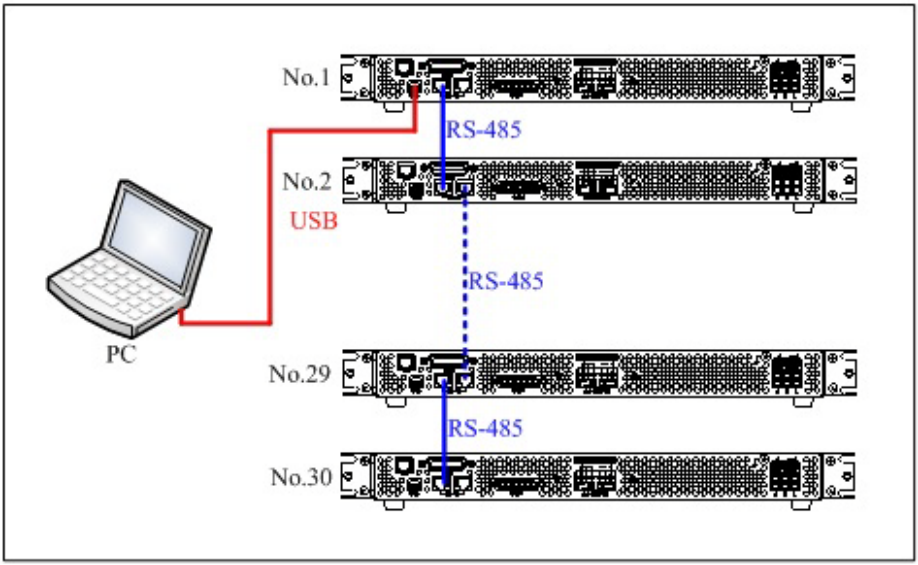

ManualsPlus.com

3. Protection and Error Messages

3.1 Overvoltage Protection (OVP)

When OVP is activated and the voltage measured exceeds the set point, the system will enter the “Overvoltage Protection” mode that will shut off the output and show OVP on the display. Press ESC to reset the protection mode and deactivate the the buzzer.

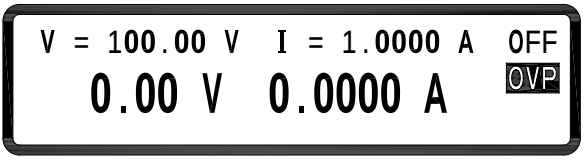

3.2 Overcurrent Protection (OCP)

When OCP is activated and the current measured exceeds the set point of protected current, system will enter the “Overcurrent Protect” mode that will shut off the output and show OCP on the display. Press ESC to reset the protection mode and deactivate the buzzer.

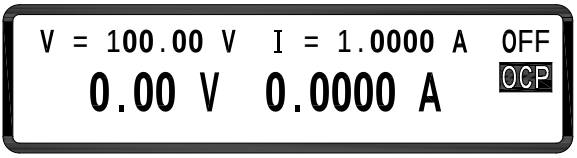

3.3 Overpower Protection (OPP)

When OPP is activated and the power measured exceeds the set point, the system will enter the “Overpower Protection” mode that will shut off the output and display OPP on the screen. Press ESC to reset the protection mode and deactivate buzzer.

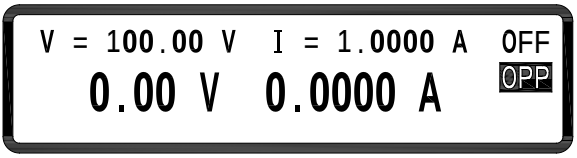

ManualsPlus.com

3.4 Constant Voltage Protection (CV TO CC)

When this function is activated, the power supply will stay in CV mode. If load changes force the system to transition from CV to CC (constant current) mode, the system will enter the “CV TO CC Protect” state that will shut off the output and display the CVC message on the screen. Press ESC to reset the protection and deactivate the buzzer.

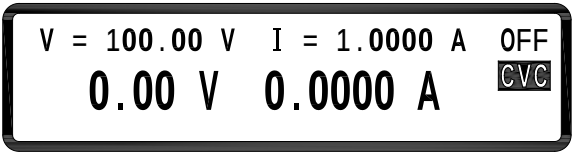

3.5 Constant Current Protection (CC TO CV)

When this function is activated the power supply will stay in CC mode. If load changes forces the transition from CC to CV (constant voltage) mode, the system will enter the “CC TO CV Protect” state that will shut off output and display CCV message on the screen. Press ESC to reset the protection and deactivate buzzer.

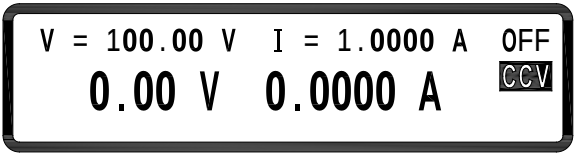

3.6 Overtemperature Protection (OTP)

When the instrument detects abnormally high temperature, the system will enter the “Overtemperature Protect” mode that will shut off the output and display the error message as shown in the following figure. Press ESC to reset the protection and deactivate buzzer.

ManualsPlus.com

```
V = 100.00 V   I = 1.0000 A   OFF
  0.00 V   0.0000 A           OTP
```

3.7 Low Voltage Protection (ACD)

When the machine has detected abnormally low AC power input, system will enter the “AC Detect Low Protect” mode that will shut off the output and display the error message shown in the following figure. Press ESC to reset the protection and deactivate buzzer.

```
     AC DETECT LOW !!!!
LINE VOLTAGE IS UNDER SPEC.
OR POWER SHUTDOWN.
```

3.8 Input Error Message

When users enter a voltage or current setting that is beyond the acceptable range, system will display “RANGE ERROR” in response and show users the correct input range. Press ESC to re-enter the voltage/current setting.

```
     RANGE ERROR !!!!
MIN RANGE :    5.00
MAX RANGE :  300.00
```

ManualsPlus.com

4. Remote Communication

4.1 Interface Connection

USB (Virtual COM)

All models have a standard USB interface (virtual COM) that can be used for remote communication. The serial settings are listed below:

BAUDRATE: 57600
PARITY: NONE
DATA BITS: 8
STOP BIT: 1
FLOW CONTROL: NONE

GPIB

GPIB option is available when the supply is installed with the optional LAN/GPIB interface card. Each model can be configured with a GPIB address from 1 – 30. To communicate via GPIB, connect a GPIB cable to the GPIB interface of the LAN/GPIB interface card.

Ethernet (LAN)

Ethernet (LAN) option is available when the supply is installed with the optional LAN/GPIB interface card. There are three ways to control the power supply via LAN interface: Web server, Telnet connection, and Socket connection.

Web Server

There is an embedded web server GUI that can access the power supply via LAN interface using a Java enabled web browser. The GUI

ManualsPlus.com

provides a simple way of setting voltage and current, as well as monitoring the output, using a web browser from a computer connected to the same local area network as the power supply. To access this, do the following:

1. On the computer, open up a Java-enabled web browser.
2. From the power supply menu, copy down the **IP ADDRESS** that you (static assignment) assigned and type that address in the URL bar of your browser with **http://** prefix (i.e. **http://192.168.1.150** for IP Address 192.168.1.150)
3. If correctly configured, the following screen will be shown:

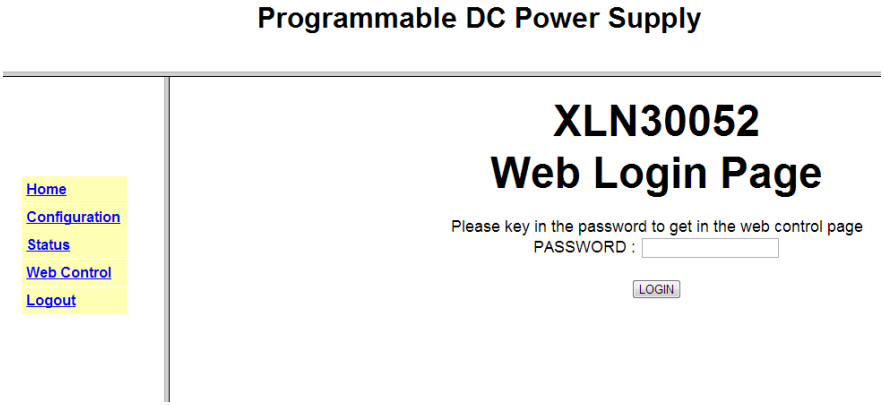

4. A password is required to login and access any of the menu items on the page.

DEFAULT ADMIN PASSWORD: ***123456***

Menu Items

This table describes each of the menu items available on the left frame of the web browser GUI.

ManualsPlus.com

Table 1 - Web Browser Menu Description

Home	Provides general information of the power supply: **Model Number, Manufacturer, Short Description, MAC Address, IP Address, Firmware Version.**
Configuration	Allows users to configure: **OVP Setting, OCP Setting, OPP Setting, LCD Backlight, *Change Password.** ***Be sure to remember the new password if changed because it cannot be overridden.***
Status	Shows last error or warning messages from the power supply. **It should normally be 0, which means no error(s).**
Web Control	Allows the user to manually send remote commands and control: **Vset, Iset, Output state**

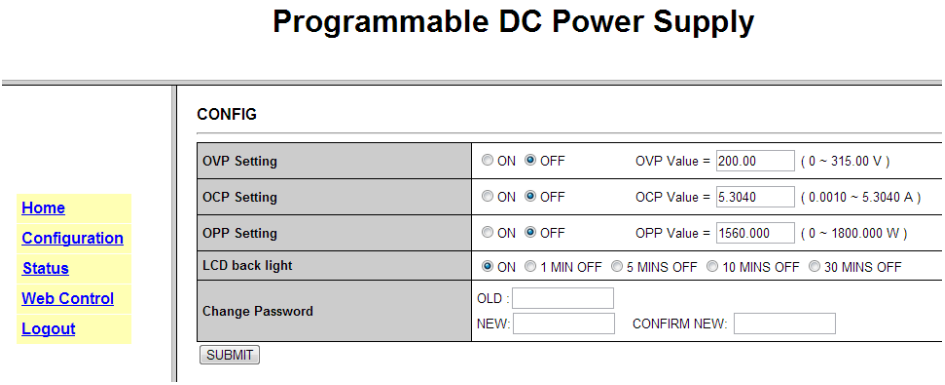

ManualsPlus.com

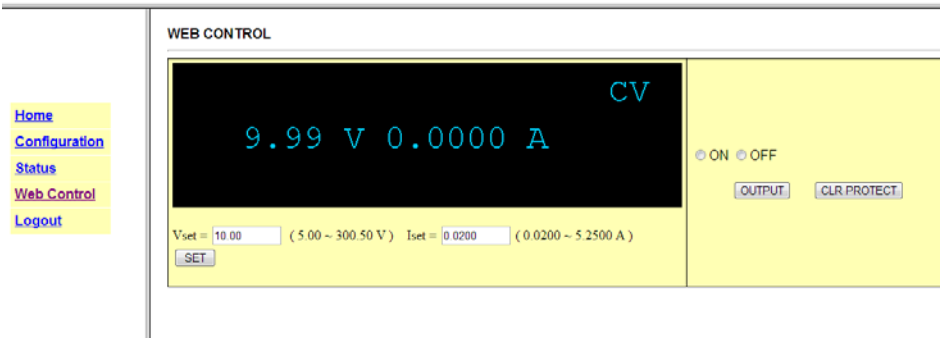

Telnet Connection

The power supply can be connected via Ethernet (LAN) interface using Telnet client with the following port:

Telnet Port: **5024**

Windows XP Users

1. Open a command prompt window, which can be found by going to **Start** > **All Programs** > **Accessories** > **Command Prompt**. Alternatively, you can click on **Start**, select **Run…**, and type in **cmd** in the **Open:** input box Click **OK** to open Command Prompt.
2. At the prompt, type in **Telnet<sp><device IP><sp>5024** where:

   <sp> is a space.

   <device IP> is the IP address you have configured for the power supply.

   Example: Telnet 192.168.1.150 5024
3. The following screen will be displayed, and users can enter remote commands at the prompt, such as ***IDN?**.

ManualsPlus.com

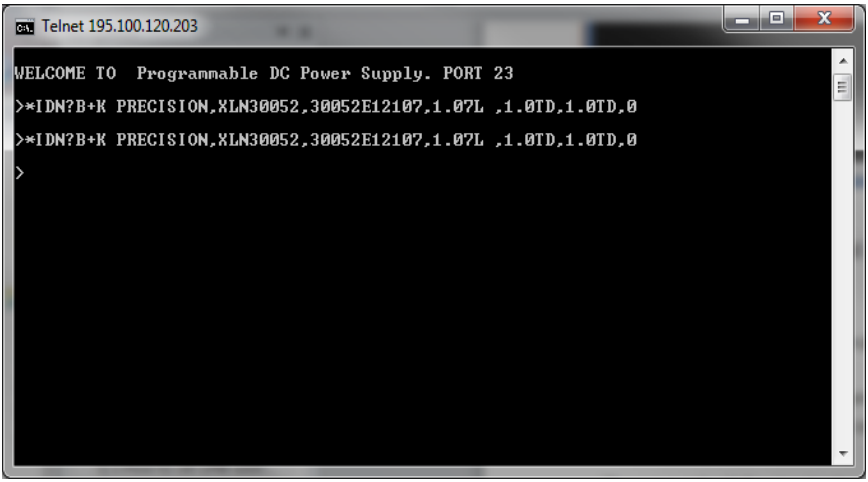

Windows Vista/7 Users

By default, Telnet client is not installed on the system. There are two ways to install it manually:

1. Open command prompt:
   a. Select Windows **Start** > **All Programs** > **Accessories** > **Command Prompt**
   b. Select Windows **Start** and type in **cmd** in the **Search programs and files** box and click on cmd.exe in the search list.

   Then, type the following in the prompt (Note: there is only 1 space in between “pkgmgr” and “/iu”):

   pkgmgr /iu:"TelnetClient"

   This will install the Telnet Client, which should take about 20-30 seconds. When finished, close and re-open Command prompt and follow the same steps 2 and 3 for “Windows XP users” instructions above.
2. Alternatively, go to **Control Panel,** select **Programs**, and select **Turn Windows features on or off**. Wait until the list gets

ManualsPlus.com

populated. Then, Click the box next to **Telnet Client**. When finished, follow steps 1a or 1b to open **Command Prompt** and follow the same steps 2 and 3 from "Windows XP users" instructions above.

Socket Connection

Socket connection is available for communication via Ethernet (LAN) interface. The socket port is:

Socket Port: **5025**

Users can use this port to open a raw socket connection for sending remote commands.

4.2 Parameters Definition

The communication protocol includes standard SCPI commands and a few proprietary commands which follow the SCPI convention. The SCPI interface enables users to operate the model supply through a computer or a terminal equipped with IEEE-488.2 GPIB or USB interface. Additionally, it allows remote control and monitoring.

SCPI IEEE-488.2 version supports multi units control capability that allows a user to control up to 32 power supplies.

Type	Valid Arguments
<boolean >	" ON" or 1, " OFF" or 0
<NR1 >	The data format <NR1> is defined in IEEE-488.2 for integers. Zero, positive and negative integer numeric values are valid data.
<NRf >	The data format <NRf> is defined in IEEE-488.2 for flexible Numeric Representation. Zero, positive and

ManualsPlus.com

	negative floating-point numeric values are some examples of valid data.
<string >	Characters enclosed by single or double quotes
<LF >	Line Feed, Hex code is 0x0Ah
<CR>	Carriage Return, Hex code is 0x0Dh
<END >	End or identify

Note: All commands are terminated with <CR> and <LF> characters. A space is always included in between the command and the parameter. For example, to set the GPIB address of 10 to a power supply, the following command is sent:

ADDR 10<CR><LF>

Note: The <LF> and <CR> are not presented in the following examples and command descriptions. However, users must add them as termination characters at the end of each command when programming.

4.3 The Error/Event List

SCPI interface can offer an error/event list that contains up to 10 errors/events. Users can read the errors/events through the "**error?**" command in a first-in first-out manner. Once an error/event is read, the read process will clear it from the memory. To clear all errors/events from the memory, the "***CLS**" command is used.

Error	Description
-000	No error
-001	Command error
-002	Execution error
-003	Query error
-004	Input Range error

ManualsPlus.com

-005	Parallel function, Error mode
-006	Parallel function, Multi-Master
-007	Parallel function, No Slave found
-008	Parallel function, Communication with Slave A error
-009	Parallel function, Communication with Slave B error
-010	Parallel function, Communication with Slave C error
-011	Parallel function, Sync. signal error when output on
-012	Parallel function, Sync. signal error when output off

ManualsPlus.com

4.4 Remote Communication Protocol

Command	Description
ADDRess	set the address of the machine
ADDRess?	return the address of the machine
BEEP	set beep on(1) or off(0)
CLR	clear protect status
CURRent	set current
CURRent?	return current setting
ERRor?	return error message
IOUT?	current readback
ISET	set current
ISET?	return current setting
LOCK	set rotary and keypad lock on(1) or off(0)
MODEL?	return model name
OCP	set current protect to off(0) or on(1)
OISET	set overcurrent protect level
OISET?	return overcurrent value
OPP	set power protect to off(0) or on(1)
OPSET	set overpower protect level
OPSET?	return overpower value
OUT	set output on(1) or off(0)
OVP	set voltage protect to off(0) or on(1)
OVSET	set overvoltage protect level
OVSET?	return overvoltage value
STATUS?	return status of the machine
VERsion?	return version number
VOLTage	set voltage
VOLTage?	return voltage setting
VOUT?	voltage readback
VSET	Set up output voltage
VSET?	return voltage setting

ManualsPlus.com

Examples:

Q 1:How to set GPIB address?

ADDR 10	==>address is 10

Q 2:How to read back GPIB address?

ADDR?	==>return GPIB address
ADDRESS?	==>return GPIB address

Q 3:How to set up buzzer?

BEEP 1	==>trigger beep to on
BEEP off	==>trigger beep to off

Q 4:How to clear the protecting state?

CLR	==>clear protect status

Q 5:How to read back error information?

ERR?	==>return error code

Q 6:How to set up voltage?

VSET 10	==>set voltage to 10V
VOLT 3.3V	==>set voltage to 3.3V
VOLTAGE 450	==>set voltage to 450V (for XLN60026)

Q 7:How to read the voltage setting value?

VSET?	==>return voltage setting
VOLT?	==>return voltage setting
VOLTAGE?	==>return voltage setting

Q 8:How to set up current?

ISET 1.1	==>set current to 1.1A
CURR 4.3022	==>set current to 4.3022A
CURRENT 0.250	==>set current to 250mA

Q 9:How to read the current setting value?

ISET?	==>return current setting
CURR?	==>return current setting
CURRENT?	==>return current setting

Q 10:How to read the voltage output value?

VOUT?	==>return voltage output

ManualsPlus.com

Q 11:How to read the current output value?

IOUT? ==>return current output

Q 12:How to lock buttons and the rotary knob?

LOCK 1 ==>lock the keypad and knob

LOCK ON ==>lock the keypad and knob

Q 13:How to read the product model number?

MODEL? ==>return machine model name

Q 14:How to set up OVP function?

OVP 1 ==>enable OVP protect

OVP OFF ==>disable OVP protect

Q 15:How to set up OVP voltage value?

OVSET 38 ==>set OVP level to 38 V

Q 16:How to set up OCP function?

OCP 1 ==>enable OCP protect

OCP OFF ==>disable OCP protect

Q 17:How to set up OCP current value?

OISET 2 ==>set OCP level to 2 A

Q18:How to set up OPP function?

OPP 1 ==>enable OPP protect

OPP OFF ==>disable OPP protect

Q 19:How to set up OPP power value?

OPSET 1000 ==>set OPP level to 1000 W

Q 20:How to set up output?

OUT 1 ==>output on

OUT OFF ==>output off

Q 21:How to read state value?

STATUS? ==>return status value

Q 22:How to read the firmware version?

VER? ==>return version information

VERSION? ==>return version information

ManualsPlus.com

4.5 SCPI Conformity Information

The power supply is compatible with all IEEE-488.2 and SCPI commands (1995). Commands are included in SCPI commands (in Vol. 2, 1995).

4.5.1 Common SCPI commands

Command	Explanation
*CLS	Clear status (include error code)
*IDN?	Response:<Manufacturer>, <model>, <serial number>, <firmware type, & version >
*RCL	Recalls settings from memory. Memory numbers from 0 to 9 are valid.
*RST	Resets the power supply to its power on state.
*SAV	1. Saves defined parameters 2. Saves current settings to memory. Memory numbers from 0 to 9 are valid.

Examples:

Q 23:How to store the voltage/current settings to memory devices?

*SAV 5 ==>save current settings to memory location 5

Q 24:How to recall the voltage/current settings from memory devices?

*RCL 3 ==>recall setting from memory location 3

Q 25:How to set up software reset?

*RST

Q 26:How to identify the instrument's model number?

*IDN?

Q 27:How to clear error message?

ManualsPlus.com

***CLS**

4.5.2 SCPI Command subsystem

ABORt	Abort the Output Action
FETCh	**Fetch Subsystem**
:CURRent?	Return the fetched output current
:VOLTage?	Return the fetched output voltage
MEASure	**Measure subsystem**
:CURRent?	Return the measured output current
:VOLTage?	Return the measured output voltage
MEMory	**Memory Subsystem**
<NR1 | ? >	select or return memory number, range from 0 – 9
:VSET <NRf | ? >	set or return voltage
:ISET <NRf | ? >	set or return current
:SAVE	store memory subsystem parameters
OUTput	**Output Subsystem**
<Boolean >	enable or disable output action
?	return output state
:LIMit	
:VOLTage <NRf | ? >	set or return voltage limit value
:CURRent <NRf | ? >	set or return current limit value
:SR	
:VOLTage <NRf | ? >	set or return voltage slew rate value
:CURRent <NRf | ? >	set or return current slew rate value
:STATe?	Return output mode (CV or CC)

ManualsPlus.com

:PROTection	
:CLEar	Reset latched protection

PROGram	**Program Subsystem**
<NR1 | ? >	select or return program number, range from 1 - 10
:CLEar	clear program n parameters
:ALL	clear all program parameters
:NEXT <NR1 | ? >	set or return next program number (1 - 10 , 0 for end)
:REPeat <NR1 | ? >	set or return repeat times (max. 50000)
:RUN<Boolean | ? >	set or query program on/off state
:SAV	save program parameters
:STEP < Boolean | ? >	set or return step number
:CURRent <NRf | ? >	set or return step n current setting
:ONTimet <NRf | ? >	set or return step n output time (0.2 - 20000S)
:VOLTage <NRf | ? >	set or return step n voltage setting
:TOTA[l] <NR1 | ? >	set or return program n total step numbers (max. 150)

PROTection	**Protection Subsystem**
?	return protect state
:CCCV <Boolean | ? >	set or return CC to CV protect state
:CLEar	Resets latched protection
:CVCC <Boolean | ? >	set or return CV to CC protect state
:OCP <Boolean | ? >	set or return overcurrent protect state
:LEVel <NRf | ? >	set or return overcurrent protect value
:OPP <Boolean | ? >	set or return overpower protect state

ManualsPlus.com

:LEVel <NRf | ? > set or return overpower protect value

:OVP <Boolean | ? > set or return overvoltage protect state

:LEVel <NRF | ? > set or return overvoltage protect value

PS **Parallel Subsystem**

:MODE <OFF/0,PARALLEL/1? >

set or return parallel mode

:TYPE <MASTER/0,SLAVEA/1,SLAVEB/2,SLAVEC/3|?>

set or return master/slave setting

[SOURce] **Source Subsystem**

:CURRent <NRf | ? > set or return current level:

:PROTection <Boolean | ? >

set or return overcurrent state

:LEVel <NRf | ? > set or return overcurrent level

:VOLTage <NRf | ? > set or return voltage level:

:PROTection <Boolean | ? >

set or return overvoltage state

:LEVel <NRf | ? > set or return overvoltage level

SYStem **System Subsystem**

:BEEP <Boolean | ? > set or return BEEP state

:ERRor? return system error

:GPIB

:ADDRess <NR1 | ? > set or return GPIB address (1-30)

:IP

:ADDRess <NR1.NR1.NR1.NR1 | ? >

ManualsPlus.com

	set or return IP address
:KEY	
:LOCK <Boolean | ?	set or return key lock state
:LCD	
:BL <Boolean | ? >	set or return LCD backlight state
:POWer	
:CURRent <NRf | ? >	set or return user define current level
:STATe <Boolean | ? >	set or return user define output state
:TYPE <OFF/0,LAST/1,USER/2 | ? >	set or return power up mode
:VOLTage <NRf | ? >	set or return user define voltage level
:RECall	
:DEFault	recall factory default setting
:REMote <USB/0,GPIB/1,ETHERNET/2 | ? >	set or return remote interface
:SERies?	Return serial number of the device
TIMER	**Timer Subsystem**
<Boolean >	enable or disable timer mode
?	return timer state
:HOUR<NR1 | ? >	set or return timer hours
:MINute<NR1 | ? >	set or return timer minutes
:SECond<NR1 | ? >	set or return timer seconds

ManualsPlus.com

Examples:

Q 28:How to cancel all actions?
ABOR
ABORT

Q 29:How to fetch current value?
FETC:CURR?
FETCH:CURRENT?

Q 30:How to fetch voltage value?
FETC:VOLT?
FETCH:VOLTAGE?

Q 31:How to measure current?
MEAS:CURR?
MEASURE:CURRENT?

Q 32:How to measure voltage?
MEAS:VOLT?
MEASURE:VOLTAGE?

Q 33:How to set up and read back the specific memory set?
MEM 1
MEMORY 3
MEM?
MEMORY?

Q 34:How to set up and read back the voltage stored in specific memory set?
MEM:VSET 10
MEM:VSET?
MEMORY:VSET 20
MEMORY:VSET?

ManualsPlus.com

Q 35:How to set up and read back the current stored in specific memory set?
MEM:ISET 15
MEM:ISET?
MEMORY:ISET 25
MEMORY:ISET?

Q 36:How to save data to memory set?
MEM:SAVE
MEMORY:SAVE

Q 37:How to set up and cancel output?
OUT ON
OUTPUT 0

Q 38:How to set up and read back the voltage limit?
OUT:LIM:VOLT 30
OUT:LIM:VOLT?
OUTPUT:LIMIT:VOLTAGE 35
OUTPUT:LIMIT:VOLTAGE?

Q 39:How to set up and read back the current limit?
OUT:LIM:CURR 30
OUT:LIM:CURR?
OUTPUT:LIMIT:CURRENT 35
OUTPUT:LIMIT:CURRENT?

Q 40:How to set up and read back the voltage SLEW RATE?
OUT:SR:VOLT 2.4
OUT:SR:VOLT?
OUTPUT:SR:VOLTAGE 0.01
OUTPUT:SR:VOLTAGE?

Q 41:How to set up and read back the current SLEW RATE?
OUT:SR:CURR 2.5

ManualsPlus.com

OUT:SR:CURR?
OUTPUT:SR:CURRENT 0.01
OUTPUT:SR:CURRENT?

Q 42:How to read back the output state?
OUT:STAT?
OUTPUT:STATE?

Q 43:How to read back the protection state?
PROT?
PROTECTION?

Q 44:How to set up and read back the CC to CV protection state?
PROT:CCCV ON
PROT:CCCV?
PROTECTION:CCCV 0
PROTECTION:CCCV?

Q 45:How to set up and read back the CV to CC protection state?
PROT:CVCC ON
PROT:CVCC?
PROTECTION:CVCC 0
PROTECTION:CVCC?

Q 46:How to clear the state of protection?
PROT:CLE
PROTECTION:CLEAR
OUT:PROT:CLE
OUTPUT:PROTECTION:CLEAR

Q 47:How to set up and read back the overcurrent protection state?
PROT:OCP ON
PROT:OCP?
PROTECTION:OCP 0
PROTECTION:OCP?

ManualsPlus.com

SOUR:CURR:PROT ON
SOUR:CURR:PROT?
SOURCE:CURRENT:PROTECTION 0
SOURCE:CURRENT:PROTECTION?

Q 48:How to set up and read back the overcurrent protection point?
PROT:OCP:LEV 2
PROT:OCP:LEV?
PROTECTION:OCP:LEVEL 2
PROTECTION:OCP:LEVEL?
SOUR:CURR:PROT:LEV 2
SOUR:CURR:PROT:LEV?
SOURCE:CURRENT:PROTECTION:LEVEL 2
SOURCE:CURRENT:PROTECTION:LEVEL?

Q 49:How to set up and read back the overpower protection state?
PROT:OPP ON
PROT:OPP?
PROTECTION:OPP 0
PROTECTION:OPP?

Q 50:How to set up and read back the overpower protection point?
PROT:OPP:LEV 30
PROT:OPP:LEV?
PROTECTION:OPP:LEVEL 40
PROTECTION:OPP:LEVEL?

Q 51:How to set up and read back the overvoltage protection state?
PROT:OVP ON
PROT:OVP?
PROTECTION:OVP 0
PROTECTION:OVP?
SOUR:VOLT:PROT ON
SOUR:VOLT:PROT?
SOURCE:VOLTAGE:PROTECTION 0

ManualsPlus.com

SOURCE:VOLTAGE:PROTECTION ?

Q 52:How to set up and read back the overvoltage protection point?
PROT:OVP:LEV 30
PROT:OVP:LEV?
PROTECTION:OVP:LEVEL 40
PROTECTION:OVP:LEVEL?
SOUR:VOLT:PROT:LEV 25
SOUR:VOLT:PROT:LEV?
SOURCE:VOLTAGE:PROTECTION:LEVEL 35
SOURCE:VOLTAGE:PROTECTION:LEVEL?

Q 53:How to set up the buzzer?
SYS:BEEP ON
SYSTEM:BEEP 0

Q 54: How to read back error code?
SYS:ERR?
SYSTEM:ERROR?

Q 55: How to set up and read back the GPIB address?
SYS:GPIB:ADDR 5
SYS:GPIB:ADDR?
SYSTEM:GPIB:ADDRESS 6
SYSTEM:GPIB:ADDRESS?

Q 56: How to set up and read back the IP address?
SYS:IP:ADDR 192.168.0.208
SYS:IP:ADDR?
SYSTEM:IP:ADDRESS 192.168.10.10
SYSTEM:IP:ADDRESS?

Q 57: How to set up and read back the key lock function?
SYS:KEY:LOCK ON

ManualsPlus.com

SYSTEM:KEY:LOCK?

Q 58: How to set up and read back the LCD backlight function?
SYS:LCD:BL ON
SYSTEM:LCD:BL?

Q 59: How to set up and read back the boot mode?
SYS:POW:TYPE LAST
SYS:POW:TYPE?
SYS:POWER:TYPE USER
SYS:POWER:TYPE?
SYSTEM:GPIB:ADDRESS?

Q 60: How to set up and read back the voltage setting under user-defined boot mode?
SYS:POW:VOLT 10
SYS:POW:VOLT?
SYSTEM:POWER:VOLTAGE 20
SYSTEM:POWER:VOLTAGE?

Q 61: How to set up and read back the current setting under user-defined boot mode?
SYS:POW:CURR 10
SYS:POW:CURR?
SYSTEM:POWER:CURRENT 20
SYSTEM:POWER:CURRENT?

Q 62: How to set up and read back the output state under user-defined boot mode?
SYS:POW:STAT ON
SYS:POW:STAT?
SYSTEM:POWER:STATE 0
SYSTEM:POWER:STATE?

Q 63: How to recall back default setting?

ManualsPlus.com

SYS:REC:DEF
SYSTEM:RECALL:DEFAULT

Q 64: How to set up and read back the communication interface?
SYS:REM GPIB
SYS:REM?
SYSTEM:REMOTE ETHERNET
SYSTEM:REMOTE?

Q 65: How to read back the serial number?
SYS:SER?
SYSTEM:SERIES?

Q 66: How to set up and read back the output voltage?
SOUR:VOLT 30
SOUR:VOLT?
SOURCE:VOLTAGE 35
SOURCE:VOLTAGE?

Q 67: How to set up and read back the output current?
SOUR:CURR 2
SOUR:CURR?
SOURCE:CURRENT 2
SOURCE:CURRENT?

Q 68: How to set up and read back parallel mode?
PS:MODE PARALLEL
PS:MODE?
PS:MODE OFF

Q 69: How to set up and read back master/slave in parallel mode?
PS:TYPE MASTER
PS:TYPE?
PS:TYPE 2
PS:TYPE 3

ManualsPlus.com

4.6 State Bit Definition

When "**STATE?**" command is used, the system will return three bytes in the order as shown below.

Byte 2	Byte 1	Byte 0
bit 7 - bit 0	bit 7 - bit 0	bit 7 - bit 0

The definition of each bit is described in the following:

byte 0:	bit 7	OVP on/off status
	bit 6	OCP on/off status
	bit 5	OPP on/off status
	bit 4	CC to CV on/off status
	bit 3	CV to CC on/off status
	bit 2	output on/off status
	bit 1	LCD back light on/off status
	bit 0	reserved status
byte 1:	bit 7	OVP occur flag
	bit 6	OCP occur flag
	bit 5	OPP occur flag
	bit 4	CC to CV occur flag
	bit 3	CV to CC occur flag
	bit 2	AC detect low occur flag
	bit 1	OTP occur flag
	bit 0	reserved
byte 2:	bit 7 - 0	reserved

ManualsPlus.com

4.7 Multi-Unit Programming Commands

The multi-unit programming commands used by the power supply include a carriage return (CR) character for termination of all ASCII strings. For all configuration commands (except for commands listed under Synchronous Control Commands section), the instrument will return a string "**OK**" to indicate command sent successfully. If an error occurs, it will return an error. See the "**Error! Reference source not found.**" section for details.

4.7.1 System Control Commands

This set of commands is used to select the instrument (based on their address) to control and to obtain/set its system settings.

Command	Description
CADR	Selects the address, which can be 1 to 30, of the power supply to access and control.
CCLS	Clear status
CRST	Reset command. Brings the power supply to a known state
CIDN?	Returns the power supply model identification
CREV?	Returns the firmware version
CSN?	Returns the serial number
CST?	Returns the device status
CCLR?	Clear protect

CADR

Note: This command must be used first prior to any other

ManualsPlus.com

commands to control individually addressed power supplies with RS-485 connection.

Description: Selects the address of the power supply to be controlled.

Syntax: **CADR<SP><address>**

<address> - 1 – 30 are valid numbers.

Example: **CADR 5**

This will select power supply with address = 5.

CCLS

Description: Clears the status of the selected power supply.

Syntax: **CCLS**

CRST

Description: Resets the selected power supply to a known state.

Syntax: **CRST**

CIDN?

Description: Queries the IDN information of the selected power supply. This command functions the same as *IDN?, however this is used in a multi unit programming setup for the selected power supply.

Query: **CIDN?**

Return String: **B&K PRECISION,XLN15010,SN#,fw_version,0**

CREV?

ManualsPlus.com

Description: Queries the firmware version of the selected power supply.

Query: **CREV?**

Return String: **1.10**

CSN?

Description: Queries the serial number of the selected power supply.

Query: **CSN?**

Return String: **123D19238**

Serial number is 123D19238.

CST?

Description: Queries the status of the selected power supply. This command functions the same as STATUS? command, however this is used in a multi unit programming setup for the selected power supply.

Query: **CSN?**

Return String: **123D19238**

Serial number is 123D19238.

CCLR

Description: Clears the protection flag of the selected power supply.

Syntax: **CCLR**

ManualsPlus.com

4.7.2 Output Control Commands

This set of commands controls the outputs of the selected instrument (based on their address). Use **CADR** command (described in previous section) first to select the address of the unit you want to control before using any of these commands to control that unit's output.

Command	Description
CPV	Sets the output voltage value in Volts
CPV?	Reads the output voltage setting
CMV?	Reads the actual output voltage
CPC	Sets the output current value in Amperes
CPC?	Reads the output current setting
CMC	Reads the actual output current
CDVC?	Display voltage and current data
COUT	Turns the output to ON or OFF
COUT?	Returns the output On/Off status
COV	Sets the OVP level
COV?	Returns the OVP setting level
COVP	Sets the OVP on/off
COVP?	Returns the OVP on/off
COC	Sets the OCP level
COC?	Returns the OCP setting level
COCP	Sets the OCP on/off
COCP?	Returns the OCP on/off
COP	Sets the OPP level
COP?	Returns the OPP setting level
COPP	Sets the OPP on/off
COPP?	Returns the OPP on/off
CMODE?	Returns the power supply operation mode

ManualsPlus.com

CPV

Description: Configures/Queries the VSET voltage setting of the selected power supply.

Example: **CPV 150.68**

Sets the selected power supply's VSET voltage setting to 150.68 V.

CPV?

Queries the selected power supply's VSET voltage setting.

CMV?

Description: Queries the measured/readback voltage output value of the selected power supply.

Query: **CMV?**

Return String: **120.24 V**

The selected power supply has a measured output voltage of 120.24 V.

CPC

Description: Configures/Queries the ISET current setting of the selected power supply.

Example: **CPC 3.123**

Sets the selected power supply's ISET current setting to 3.123 A.

CPC?

Queries the selected power supply's ISET current setting.

ManualsPlus.com

CMC?

Description: Queries the measured/readback current output value of the selected power supply

Query: **CMC?**

Return String: **1.234 A**

The selected power supply has a measured output current of 1.234 A.

CDVC?

Description: Queries the display voltage and current of the selected power supply.

Example: **CDVC?**

Queries channel 1

Return String: 100.23,1.567

Display voltage is 100.23 V and current is 1.567 A.

Format: <voltage>,<current>

COUT

Description: Configures/Queries the output state of the selected power supply.

Example: **COUT ON**

Sets the selected power supply's output to ON.

COUT?

Queries the selected power supply's output state.

COV

Description: Configures/Queries the overvoltage protection

ManualsPlus.com

value of the selected power supply.

Example: **COV 170.000**

Sets the selected power supply's OVP value to 170.000V.

COV?

Queries the selected power supply's OVP value.

COVP

Description: Configures/Queries the overvoltage protection state of the selected power supply.

Example: **COVP ON**

Sets the selected power supply's OVP state to ON.

COVP?

Queries the selected power supply's state.

COC

Description: Configures/Queries the overcurrent protection value of the selected power supply.

Example: **COC 3.000**

Sets the selected power supply's OCP value to 3.000 A.

COV?

Queries the selected power supply's OCP value.

COCP

Description: Configures/Queries the overcurrent protection state

ManualsPlus.com

of the selected power supply.

Example: **COCP ON**

Sets the selected power supply's OCP state to ON.

COCP?

Queries the selected power supply's OCP state.

COP

Description: Configures/Queries the overpower protection value of the selected power supply.

Example: **COP 300.00**

Sets the selected power supply's OPP value to 300.00 W.

COP?

Queries the selected power supply's OPP value.

COPP

Description: Configures/Queries the overpower protection state of the selected power supply.

Example: **COPP ON**

Sets the selected power supply's OPP state to ON.

COPP?

Queries the selected power supply's OPP state.

CMODE?

Description: Queries the output mode (CV or CC) of the selected power supply.

Query: **CMODE?**

ManualsPlus.com

Return String: CV

Format: CV or CC

4.7.3 Synchronous Control Commands

This set of commands can be used to control all the power supplies connected in the RS-485 chain at once. Note that these commands will not return an "**OK**" string upon making a configuration.

Command	Description
GRST	Reset command. Brings the power supply to a known state
GCLS	Clear status
GCLR	Clear protect
GPV	Sets the output voltage value in Volts
GPC	Sets the output current value in Amperes
GOUT	Turns the output to ON or OFF
GOV	Sets the OVP level
GOVP	Sets the OVP on/off
GOC	Sets the OCP level
GOCP	Sets the OCP on/off
GOP	Sets the OPP level
GOPP	Sets the OPP on/off

ManualsPlus.com

GRST

Description: Resets all the power supplies connected in the chain to a known state.

Syntax: **GRST**

GCLS

Description: Clears the status of all the power supplies connected in the chain.

Syntax: **GCLS**

GCLR

Description: Clears the protection flag/trip of all the power supplies connected in the chain.

Syntax: **GCLR**

GPV

Description: Configures/Queries the VSET voltage setting of all the power supplies connected in the chain.

Example: **GPV 150.68**
Sets all the power supplies' VSET voltage setting to 150.68 V.

GPC

Description: Configures/Queries the ISET current setting of all the power supplies connected in the chain.

Example: **GPC 3.123**
Sets all the power supplies' ISET current setting to

ManualsPlus.com

3.123 A.

GOUT

Description: Configures/Queries the output state of all the power supplies in the chain.

Example: **GOUT ON**

Sets all the power supplies' output to ON.

GOV

Description: Configures/Queries the overvoltage protection value of all the power supplies connected in the chain.

Example: **GOV 170.000**

Sets all the power supplies' OVP value to 170.000V.

GOVP

Description: Configures/Queries the overvoltage protection state of all the power supplies connected in the chain.

Example: **GOVP ON**

Sets all the power supplies' OVP state to ON.

GOC

Description: Configures/Queries the overcurrent protection value of all the power supplies connected in the chain.

ManualsPlus.com

Example: **GOC 3.000**
Sets all the power supplies' OCP value to 3.000 A.

GOCP

Description: Configures/Queries the overcurrent protection state of all the power supplies connected in the chain.

Example: **GOCP ON**
Sets all the power supplies' OCP state to ON.

GOP

Description: Configures/Queries the overpower protection value of all the power supplies connected in the chain.

Example: **GOP 300.00**
Sets all the power supplies' OPP value to 300.00 W.

GOPP

Description: Configures/Queries the overpower protection state of all the power supplies connected in the chain.

Example: **GOPP ON**
Sets all the power supplies' OPP state to ON.

4.7.4 Error List

When using any of the commands for multi-unit programming for configuration, a response string is returned. If the command was sent successfully to the power supply(s) (except for Synchronous Control

ManualsPlus.com

Commands), the return string will be "**OK**". If otherwise, an error message will occur. See the table below for the list of errors and their descriptions.

Return String	**Description**
Time out	Wait response time has timed out
Range error	Input value is out of range
Multi master	More than one master is in the chain.

5. Calibration

Note: B&K Precision recommends a calibration interval of one year for this power supply. The following calibration instructions may be used by authorized technicians or calibration personnel only. If you are not authorized, do not attempt to calibrate the instrument yourself, as it may damage the instrument and void the warranty.

5.1 Required Equipment

- 5 1/2 DVM (HP34401A)
- Shunt for current calibration (100 A/ 10 mΩ)

ManualsPlus.com

5.2 Voltage Calibration

Follow the step by step instructions below for voltage calibration.

1. Power off the supply and connect its output terminal to a Digital Volt Meter (DVM), as shown in the figure below. Then set the meter for DC voltage measurement.

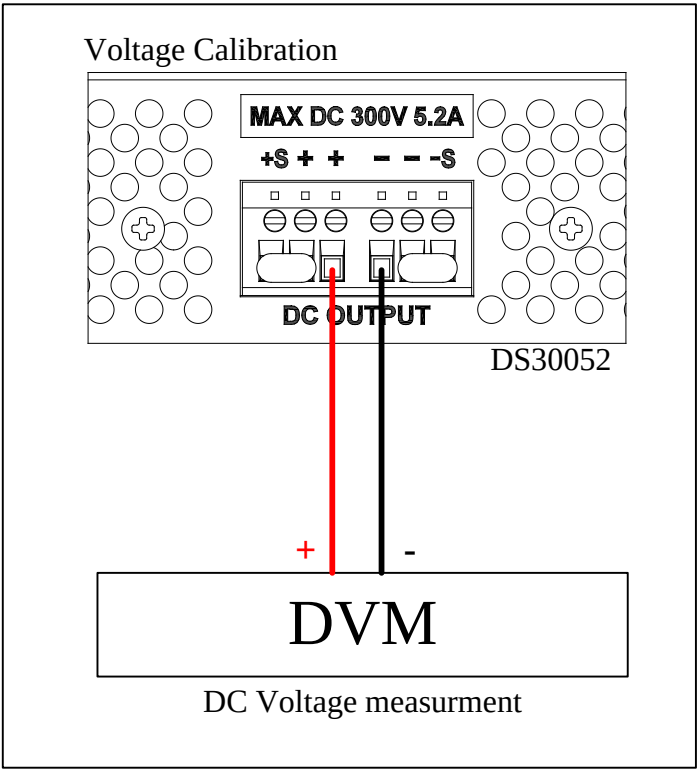

2. Turn on the power supply's output.
3. Press 8 in the third page of Menu Setting to enter CALIBRATION page. Users can enter the password and then access to the calibration procedures.

ManualsPlus.com

```
PLEASE KEYIN PASSWORD:_
```

4. Key in “13579” as the password to enter the calibration menu.

```
1.VOLTAGE CALIBRATION
2.OVP CALIBRATION
3.CURRENT CALIBRATION          ▼
```

```
4.OCP CALIBRATION              ▲
5.EXT VOLT CALIBRATION
6.EXT MONV CALIBRATION         ▼
```

```
7.EXT CURR CALIBRATION
8.EXT MONI CALIBRATION
9.RECALL DEFAULT               ▲
```

5. Press (1) to access the Voltage Calibration menu, and the following parameters will be displayed.
6. With the CALIB VOLT Lo selected, look at the voltage value displayed on the DVM, and change the value to match the measured results. Then press (Enter). Repeat and do the same for CALIB VOLT MIDL, CALIB MIDH, and CALIB VOLT Hi. The values should meet within the specified range in the below tables, depending on the model. If it does not, you may have to inspect the hardware. Please contact B&K Precision.

XLN60026

Function	Setting	Range of read back value
Lo	30	5 ~ 33

ManualsPlus.com

MIDL	198	178.2 ~ 217.8
MIDH	396	356.4 ~ 435.6
Hi	570	513.0 ~ 627.0

XLN30052

Function	Setting	Range of read back value
Lo	15	5 ~ 16.5
MIDL	99	89.1 ~ 108.9
MIDH	198	178.2 ~ 217.8
Hi	285	256.5 ~ 313.5

XLN15010

Function	Setting	Range of read back value
Lo	7.5	5 ~ 8.25
MIDL	49.5	44.55 ~ 54.45
MIDH	99	89.1 ~ 108.9
Hi	142.5	128.25 ~ 156.75

```
CALIB VOLT Lo  = _15.000 V
CALIB VOLT MIDL=  99.000 V
CALIB VOLT MIDH= 198.000 V
```

```
CALIB VOLT Hi  = 285.000 V
```

7. After pressing (Enter) for CALIB VOLT Hi parameter, the calibration values will be stored into the internal flash memory, and then return to the calibration menu.

ManualsPlus.com

5.3 OVP Calibration

Follow the step by step instructions below for OVP calibration.

1. Press (2) in the calibration menu to enter the OVP calibration menu.

```
CALIB OVP Lo = ▶ Enter
CALIB OVP Hi =
```

2. Press (Enter) to access OVP calibration procedure for “Lo”.

```
CALIB OVP Lo = ▶ Calibrating...
CALIB OVP Hi =
```

3. When complete, go to the OVP “Hi” parameter and press (Enter).

```
CALIB OVP Lo = ▶ OK
CALIB OVP Hi = ▶ Enter
```

4. Once completed, the calibration values will be stored into the internal flash memory and return to the calibration menu. If calibration is not completed within 10 seconds after calibration starts, there may be some hardware issues with the OVP protection circuit and may need to be inspected by a trained technician.

```
CALIB OVP Lo = ▶ OK
CALIB OVP Hi = ▶ Calibrating...
```

ManualsPlus.com

5.4 Current Calibration

Follow the step by step instructions below for current calibration.

1. Connect two terminals on the output of the power supply to two ends of the current shunt, then connect the DVM to the sensor of the current shunt to measure DC voltage, as shown below.

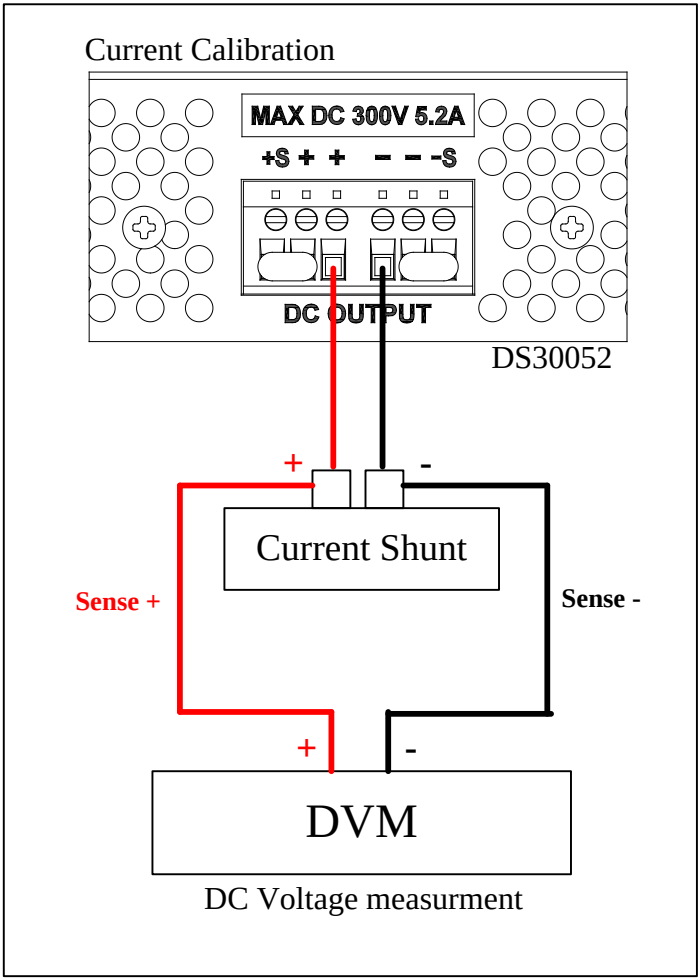

2. Press 3 from the calibration menu to enter the current

ManualsPlus.com

calibration menu.

3. First, input the resistance of the current shunt in mΩ for current measurement fixture and press (Enter).
4. Then, observe the voltage value shown on the DVM, and input it accordingly for CALIB CURR Lo, then CALIB CURR MID1, MID2, MID3, and Hi accordingly.

```
SHUNT(m-ohm)    =   10.00
CALIB CURR Lo   =  3.7700 mV
CALIB CURR MID1=  6.2900 mV
```

```
CALIB CURR MID2= 20.3900 mV
CALIB CURR MID3= 34.3900 mV
CALIB CURR Li   = 49.3200 mV
```

5. Be sure to check that all values are within the range specified by the below tables, depending on the model.

XLN60026

Function	Setting	Range of transformation value
Lo	0.1352	0.01 ~ 0.1487
MID1	0.3424	0.3082 ~ 0.3766
MID2	1.04	0.936 ~ 1.144
MID3	1.7342	1.5608 ~ 1.9076
Hi	2.47	2.223 ~ 2.717

XLN30052

Function	Setting	Range of transformation value
Lo	0.2704	0.02 ~ 0.2974
MID1	0.6812	0.6131 ~ 0.7493

ManualsPlus.com

MID2	2.08	1.872 ~ 2.288
MID3	3.468	3.1212 ~ 3.8148
Hi	4.94	4..446 ~ 5.434

XLN15010

Function	Setting	Range of transformation value
Lo	0.5408	0.04 ~ 0.5949
MID1	1.3697	1.2327 ~ 1.5067
MID2	4.16	3.744 ~ 4.576
MID3	6.9368	6.2431 ~ 7.6305
Hi	9.88	8.892 ~ 10.868

6. If the values are not consistent with your measurements, there might be issues with the hardware and will need to be inspected by a trained technician.
7. Once calibration is finished, the values will be stored into the internal flash memory and return to the calibration menu.

5.5 OCP Calibration

Follow the step by step instructions below for OCP calibration.

1. Press (4) in the calibration menu to enter OCP calibration menu.
2. Press (Enter) to access the OCP calibration procedure for “Lo”.

ManualsPlus.com

```
CALIB OCP Lo = ▶ Enter
CALIB OCP Hi =
```

3. Wait until it is finished. It will indicate “OK”. Now, do the same for OCP “Hi”.

```
CALIB OCP Lo = ▶ OK
CALIB OCP Hi = ▶ Enter
```

4. Once completed, the calibration values will be stored into the internal flash memory and return to the calibration page. If it is not completed within 10 seconds from the start of the calibration, there may be issues with the OCP protection circuit and will need to be inspected by a trained technician.

ManualsPlus.com

Index

AC input, 14
Analog Interface, 39
Calibration, 97
Caution, 18
CHAIN, 30
Down/Right/Store, 20
Enable +/-, 40
Environmental, 11
Error, 37
Ethernet (LAN), 60
Fuses, 17
HOT KEY, 23
list mode, 51
Local/Analog State, 44
MASTER/SLAVE, 36
Monitor, 50
Multi-unit Connection, 56
OCP, 34
OVP, 33
Parallel Mode, 35
POWER ON STATE, 24
Rackmount, 12
Resistor Mode, 46
RMT/LCL Sense, 31
SLEW, 26
Socket, 65
specifications, 8
Telnet, 63
TIMER, 29
Up/Left/Recall, 20
virtual COM, 23
Web Server, 60

ManualsPlus.com

Service Information

Warranty Service: Please go the support and service section on our website www.bkprecision.com to obtain a RMA #. Return the product in the original packaging with proof of purchase to the address below. Clearly state on the RMA the performance problem and return any leads, probes, connectors and accessories that you are using with the device.

Non-Warranty Service: Please go the support and service section on our website www.bkprecision.com to obtain a RMA #. Return the product in the original packaging to the address below. Clearly state on the RMA the performance problem and return any leads, probes, connectors and accessories that you are using with the device. Customers not on an open account must include payment in the form of a money order or credit card. For the most current repair charges please refer to the service and support section on our website.

Return all merchandise to B&K Precision Corp. with pre-paid shipping. The flat-rate repair charge for Non-Warranty Service does not include return shipping. Return shipping to locations in North America is included for Warranty Service. For overnight shipments and non-North American shipping fees please contact B&K Precision Corp.

B&K Precision Corp.

22820 Savi Ranch Parkway

Yorba Linda, CA 92887

www.bkprecision.com

714-921-9095

Include with the returned instrument your complete return shipping address, contact name, phone number and description of problem.

ManualsPlus.com

ManualsPlus.com

Limited Three-year Warranty

B&K Precision Corp. warrants to the original purchaser that its products and the component parts thereof, will be free from defects in workmanship and materials for a period of **three years** from date of purchase.

B&K Precision Corp. will, without charge, repair or replace, at its option, defective product or component parts. Returned product must be accompanied by proof of the purchase date in the form of a sales receipt.

To help us better serve you, please complete the warranty registration for your new instrument

via our website www.bkprecision.com.

Exclusions: This warranty does not apply in the event of misuse or abuse of the product or as a result of unauthorized alterations or repairs. The warranty is void if the serial number is altered, defaced or removed.

B&K Precision Corp. shall not be liable for any consequential damages, including without limitation damages resulting from loss of use. Some states do not allow limitations of incidental or consequential damages. So the above limitation or exclusion may not apply to you.

This warranty gives you specific rights and you may have other rights, which vary from state-to-state.

B&K Precision Corp.
22820 Savi Ranch Parkway
Yorba Linda, CA 92887
www.bkprecision.com
714-921-9095

ManualsPlus.com

ManualsPlus.com

22820 Savi Ranch Parkway
Yorba Linda, CA 92887
www.bkprecision.com

© 2013 B&K Precision Corp.

Printed in Taiwan
v062413