ManualsPlus.com

D G S 1 DRAKE

DIGITAL FREQUENCY SYNTHESIZER

INSTRUCTION MANUAL

TABLE OF CONTENTS

SECTION I : GENERAL DESCRIPTIONS

SECTION II : CONNECTIONS TO RECEIVER

SECTION III : OPERATION

SECTION IV : SCHEMATIC DIAGRAMS

SECTION V : CRYSTALS INSERTION

Downloaded by RadioAmateur.EU

BELDI - Milano

ManualsPlus.com

SECTION I

GENERAL DESCRIPTION

The set is made with 2 main subsystems: a 0,5 MHz step crystal oscillator and a programmed counter.

A more detailed description is given by the block diagram of Fig.1.

The signal from injection is buffered and squared, before going to the counter's input gate.

The over range system of the counter is programmed in two different ways, depending if the 1st band starts with 0,0 MHz or 0,5 MHz.

The display is a 6 digits one, The last 4 nixies (on the right) are driven by the counter, while the firt 2 (on the left) are connected with the 10 MHz and the 0,5 MHz selectors.

The oscillator gives a signal which is used instead of the receiver's first conversion crystal oscillator, and which can be changed in 0,5 MHz steps, so that coverage of the whole 0,5-30 MHz HF range is acheived.

The counter gives the exact frequency readout, in each 0,5 MHz sub-range, with 100 Hz resoluction.

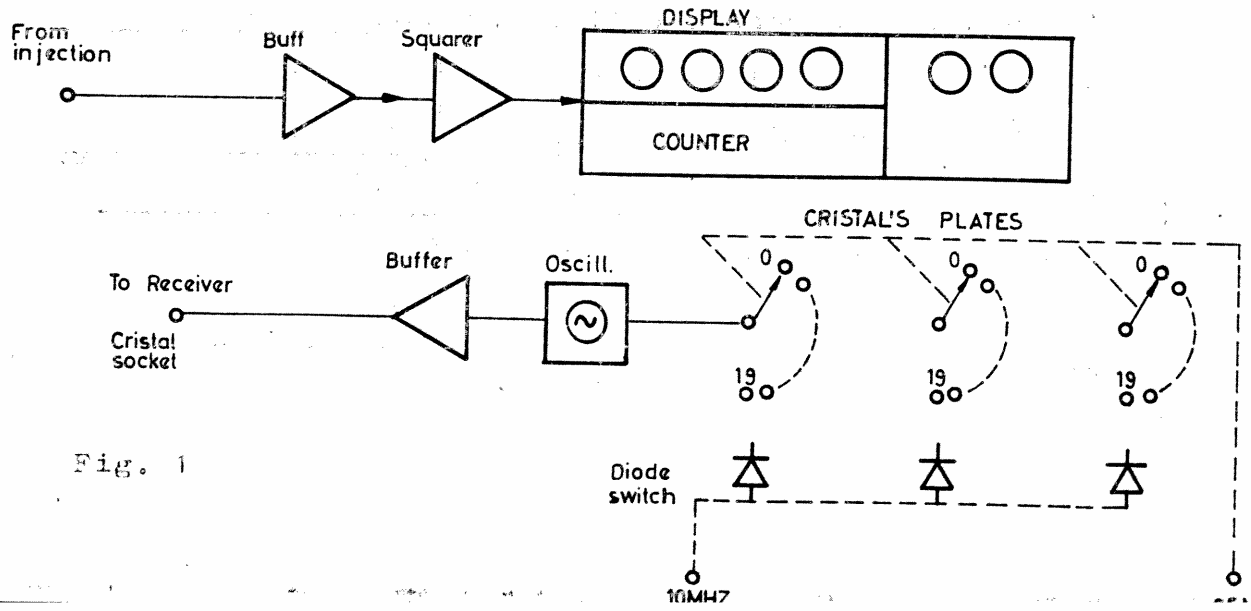

Fig. 1

ManualsPlus.com

SECTION III

OPERATION

1) Set the receiver's crystal-switch, in the 1st position.

2) Tune the band switch in accordance with the accessory operation instruction of the receiver's instruction manual.

3) Tune the 0,5 MHz and 10 MHz selectors of DGS1, in accordance with the beginning of the wanted band.

4) Tune the preselector control for the best sensitivity: be sure that the preselector is not tuned on image or other spurions signals,or the counter will not operate properly, and the receiver will not give the required sensitivy.
It is advisable to make a table,with exact preselector tunnig, for any 500 KHz-wide band.

CAUTION

Due to the frequency tolerance of receiver's second conversion crystal oscillator,it will be necessary to adjust time base oscillator of DGS1,to get the best readout accuracy.
To adjust time base oscillator,remove the upper cabinet cover and internal box cover: T.B. trimmer is near crystal socket (See Fig. 8).
Tune a goog standard signal (W.W.V. or a well known broadcast) and make zero beat on its carrier (it is preferable to monitor the beat with an oscilloscope on audio output): adjust T.B. trimmer untill the extact frequency is read.

ManualsPlus.com

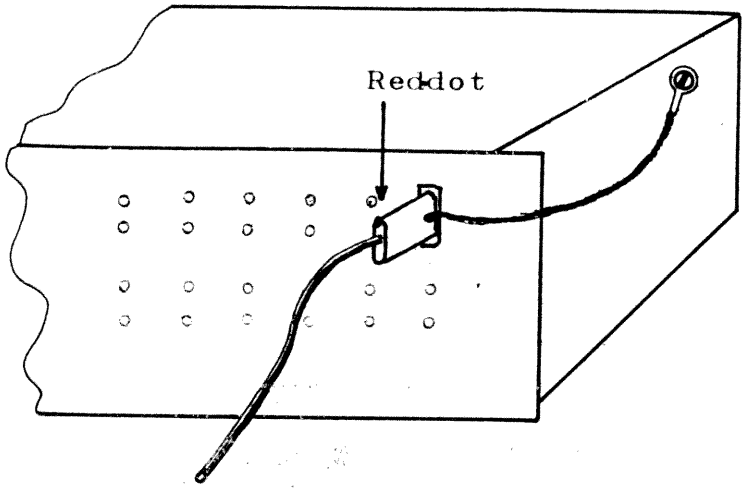

FIGURE 4

FIGURE 5

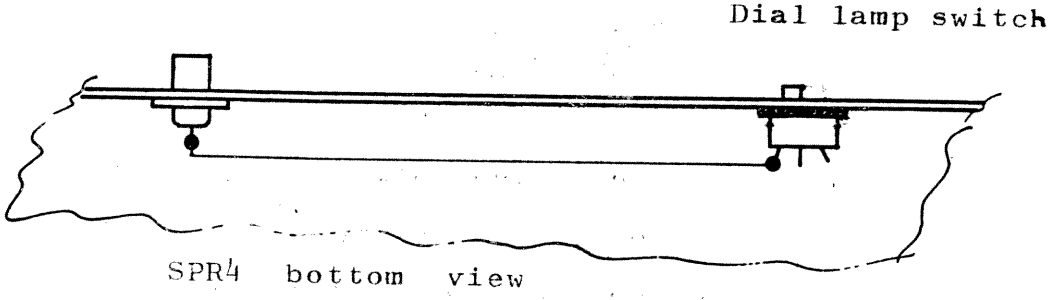

FIGURE 6

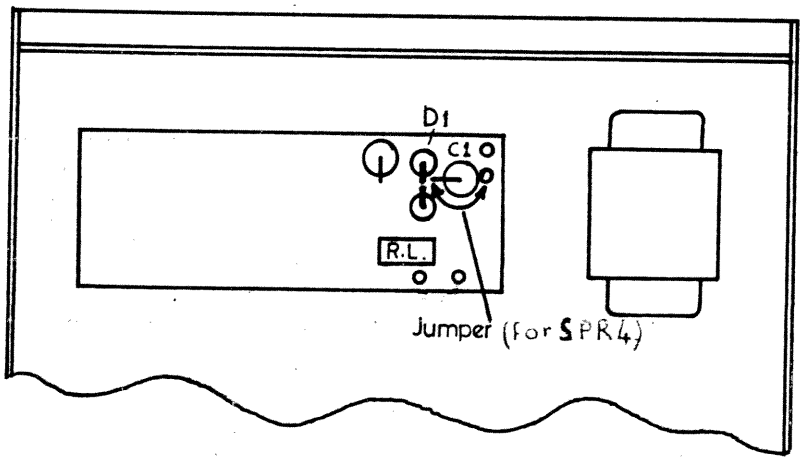

DGS1 (top view)

ManualsPlus.com

CONNECTIONS TO R4B/R4C RECEIVER

1) Connect the oscillator plug to the 1st accessory crystal socket through the HC6 adapter; ground connection must be fastened to the screw on the right the socket itself. (See Fig.2)

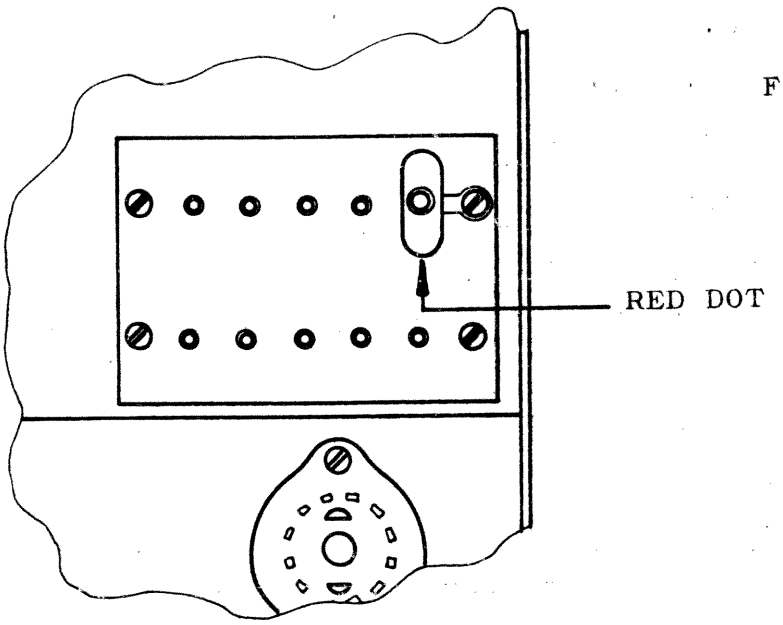

FIGURE 2

2) Connect the injection socket of the receiver to one of the socket on the rear panel of DGS1.
If the receiver must be used in transceiver mode, the injection signal for the transmitter must be taken from the second socket of the DGS1 (wich is internally connected to the first); See Fig.3

FIGURE 3

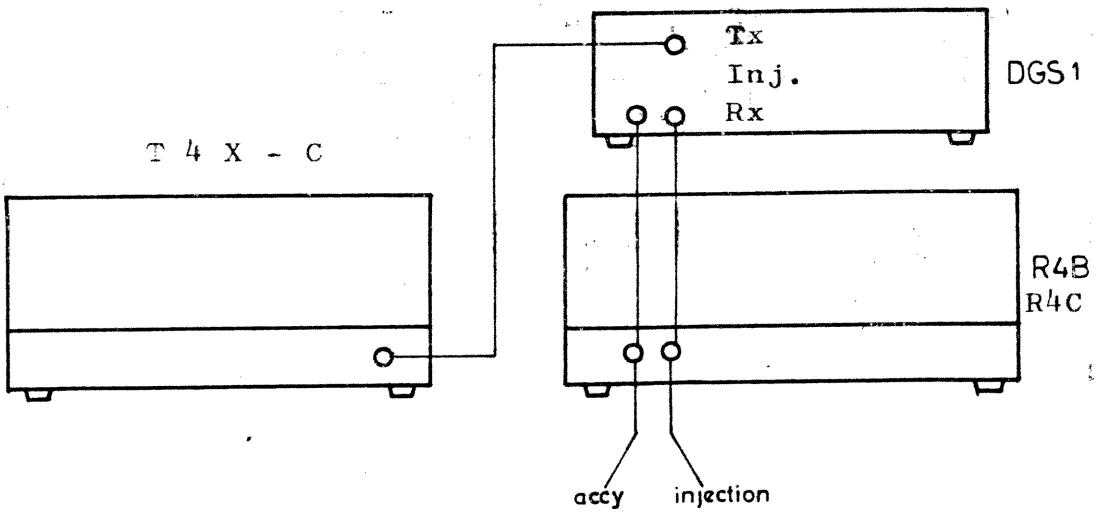

ManualsPlus.com

CONNECTION TO SPR4 RECEIVERS

Remove receiver's cabinet and connect HC25 adapter to the crystal socket N°1: red dot must be upside (see Fig.4) ground connection must be made with the screw on the side of crystals board.

Let coaxial cable go out of the cabinet through the central hole in the upper side, or through the same hole than speaker cable.

The oscillator plug of DGS1 must be fastened to the female connector of this cable.

Connect DGS1 counter input plug to injection socket: of course model TA-4 transceiver adaptor must be installed, in order to get this injection signal available.

For DGS1 remote switch-on, a female Jack must be installed in the hole under mute jack, and its contact must be connected to the pin of S-12 (dial lamp switch) connected to power transformer T7 (see Fig.5).

It will be necessary to change also the plug of the DGS1 remote switch cord, with a jack of the same type that the female installed on SPR4: the red wire of this cable must be soldered to the central connection.

Remove DGS1 cabinet and cut diode D1 leads: make a jumper as in (Fig.6) across C1.

*(or brown)

Downloaded by RadioAmateur.EU

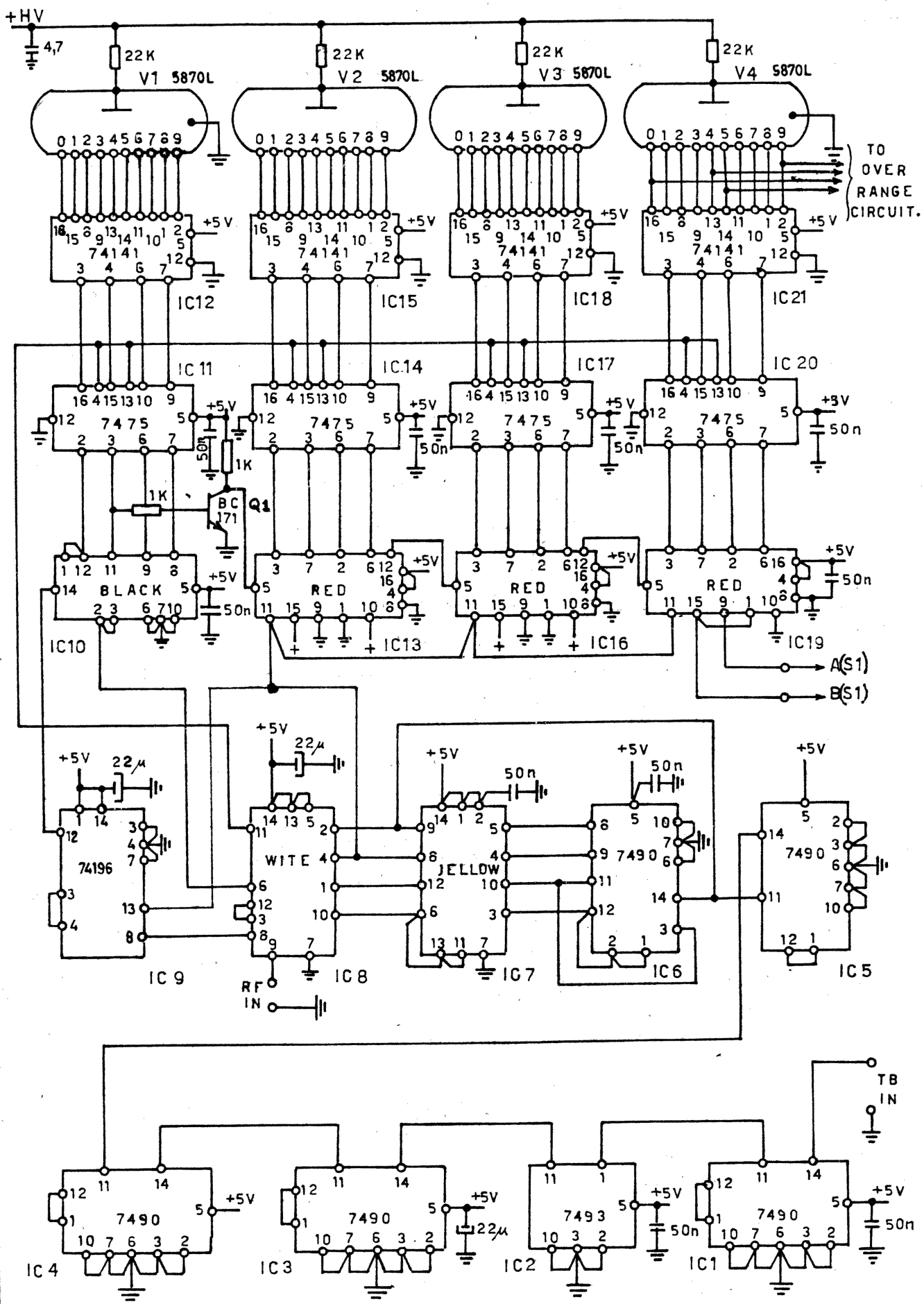
+HV
4,7
22K
V1 5870L
V2 5870L
V3 5870L
V4 5870L
TO OVER RANGE CIRCUIT.
+5V
74141
IC12
IC15
IC18
IC21
IC 11
IC14
IC17
IC 20
7475
50n
1K
BC 171
Q1
BLACK
RED
IC10
IC13
IC16
IC19
A(S1)
B(S1)
22µ
74196
IC 9
WITE
JELLOW
IC8
IC7
7490
IC6
IC5
RF IN
TB IN
IC4
IC3
7493
IC2
IC1

Downloaded by
RadioAmateur.EU

ManualsPlus.com

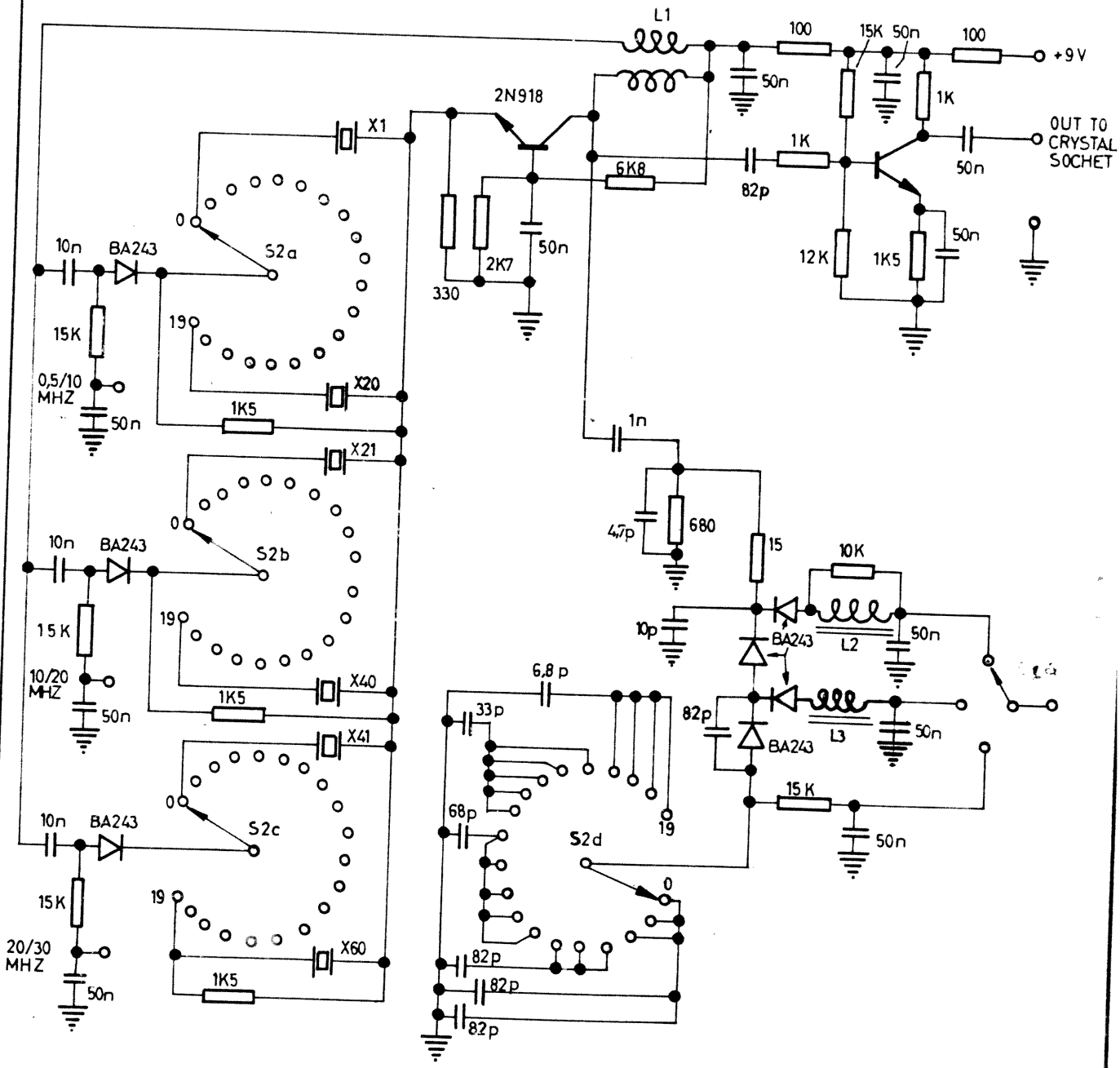

ManualsPlus.com

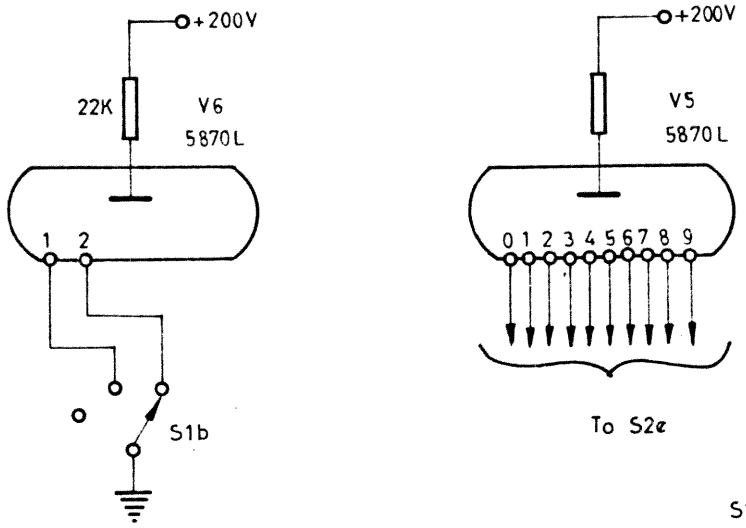

S1 = 10MHZ Selector

S2 = 0,5MHZ Selector

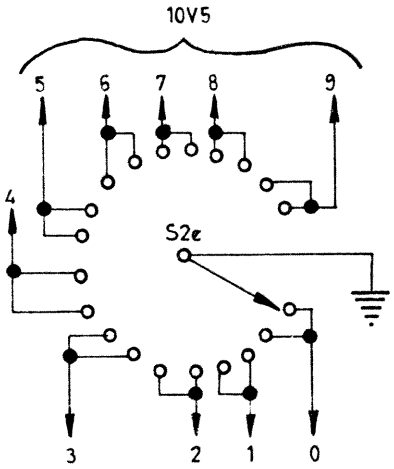

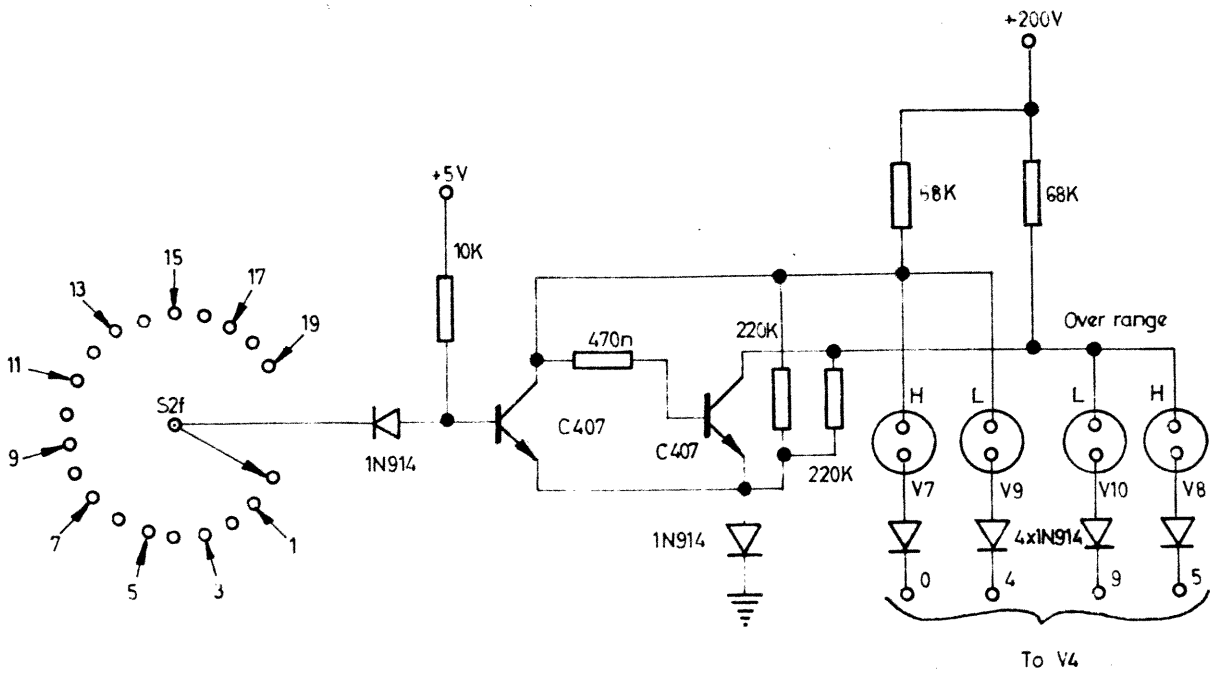

9582

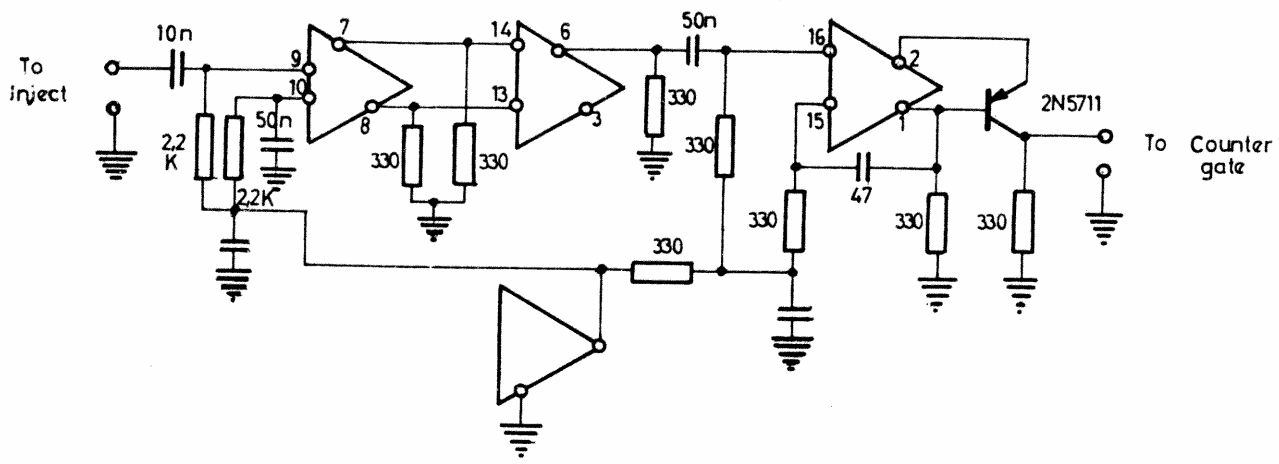

Counter amplifier

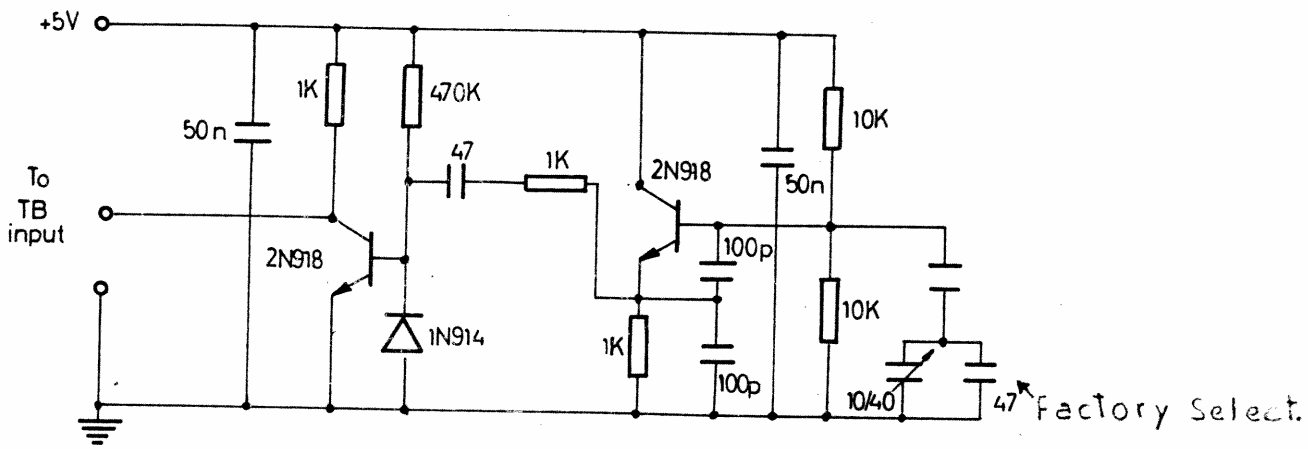

Time Base Oscillator

180

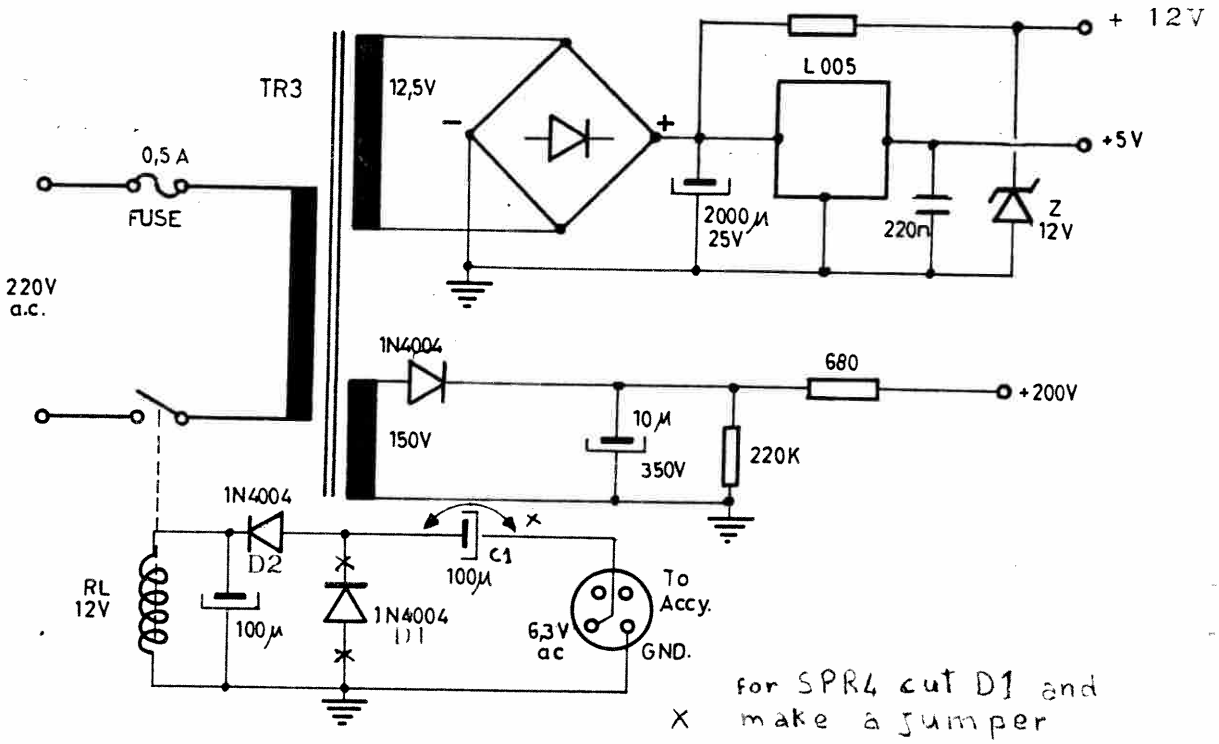

X for SPR4 cut D1 and make a jumper across C1

Power Supply

ManualsPlus.com

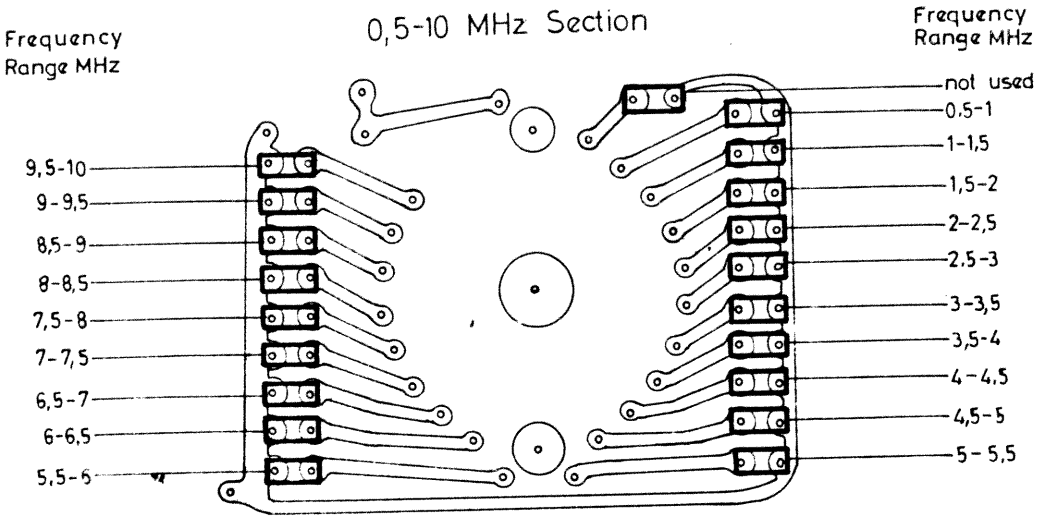

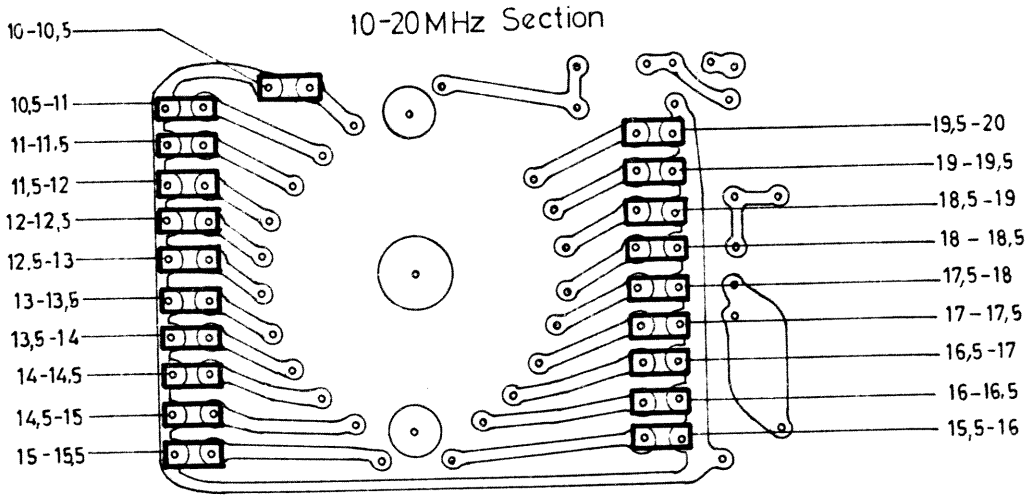

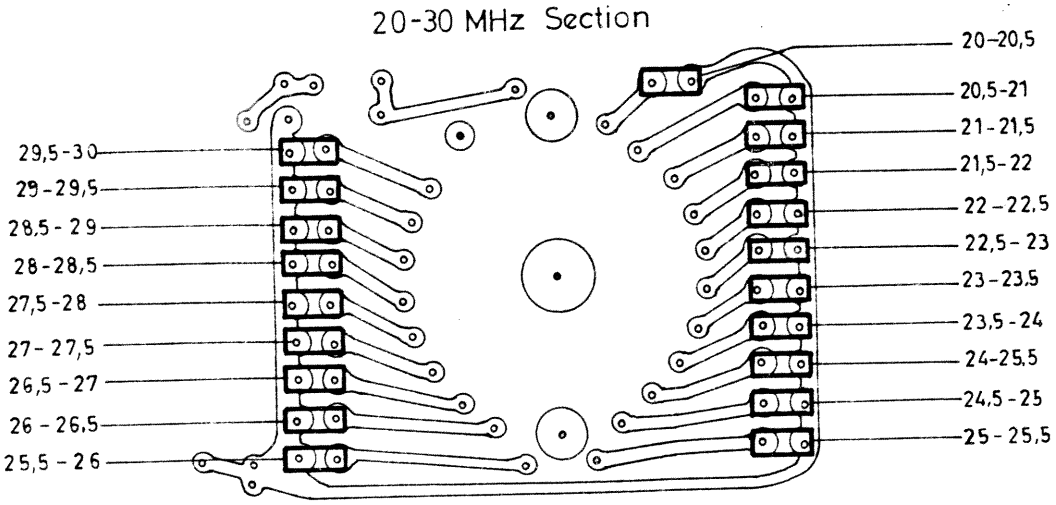

View from cristals side

Downloaded by RadioAmateur.EU

ManualsPlus.com

FIGURE 7

OSCILLATOR SECTION
TOP VIEW

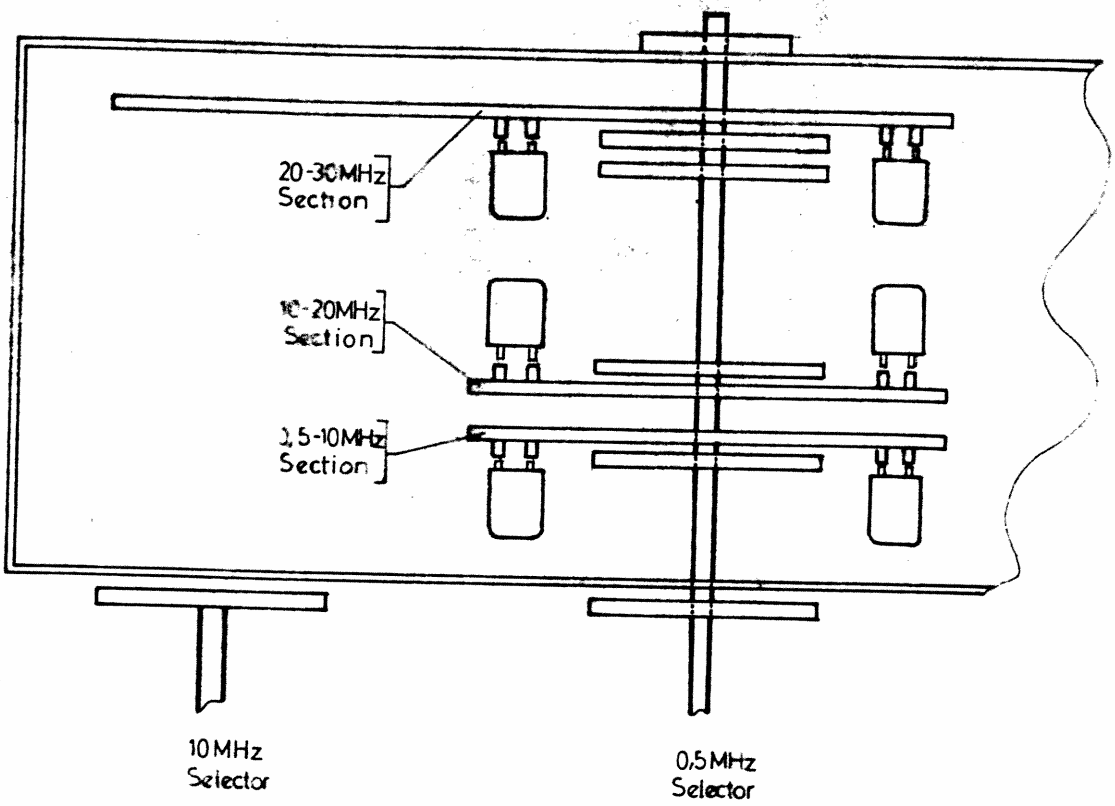

COUNTER SECTION
TOP VIEW
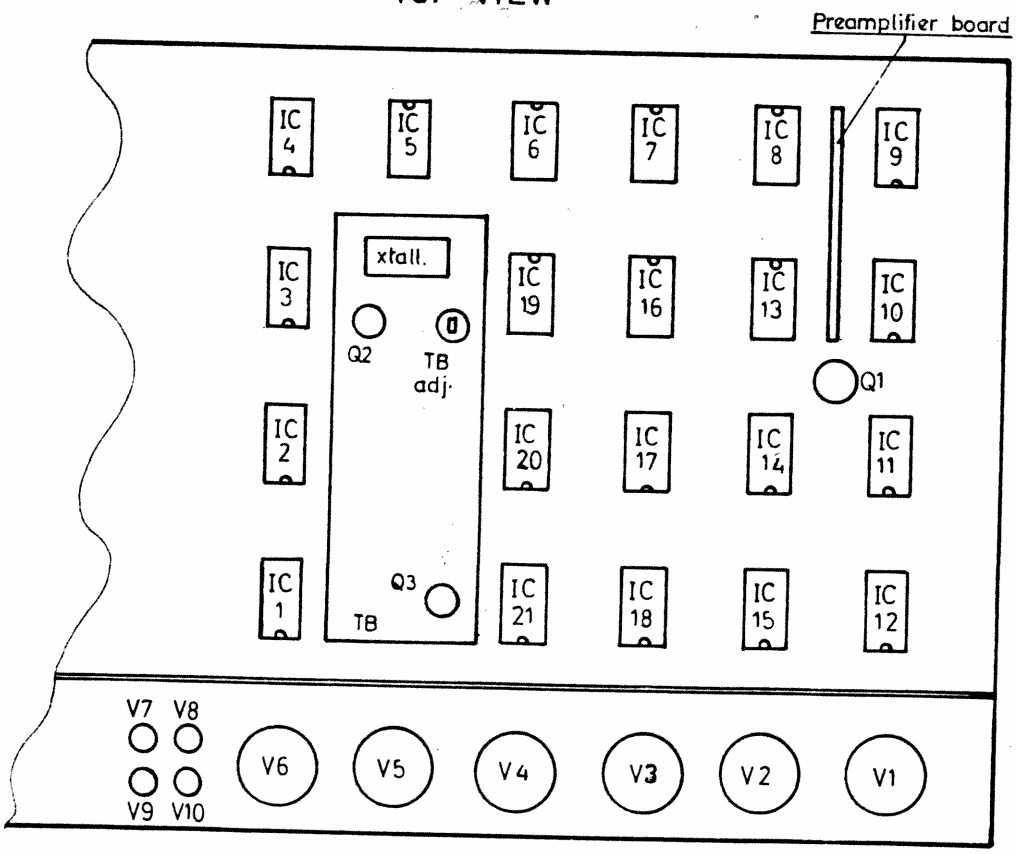
FIGURE 8