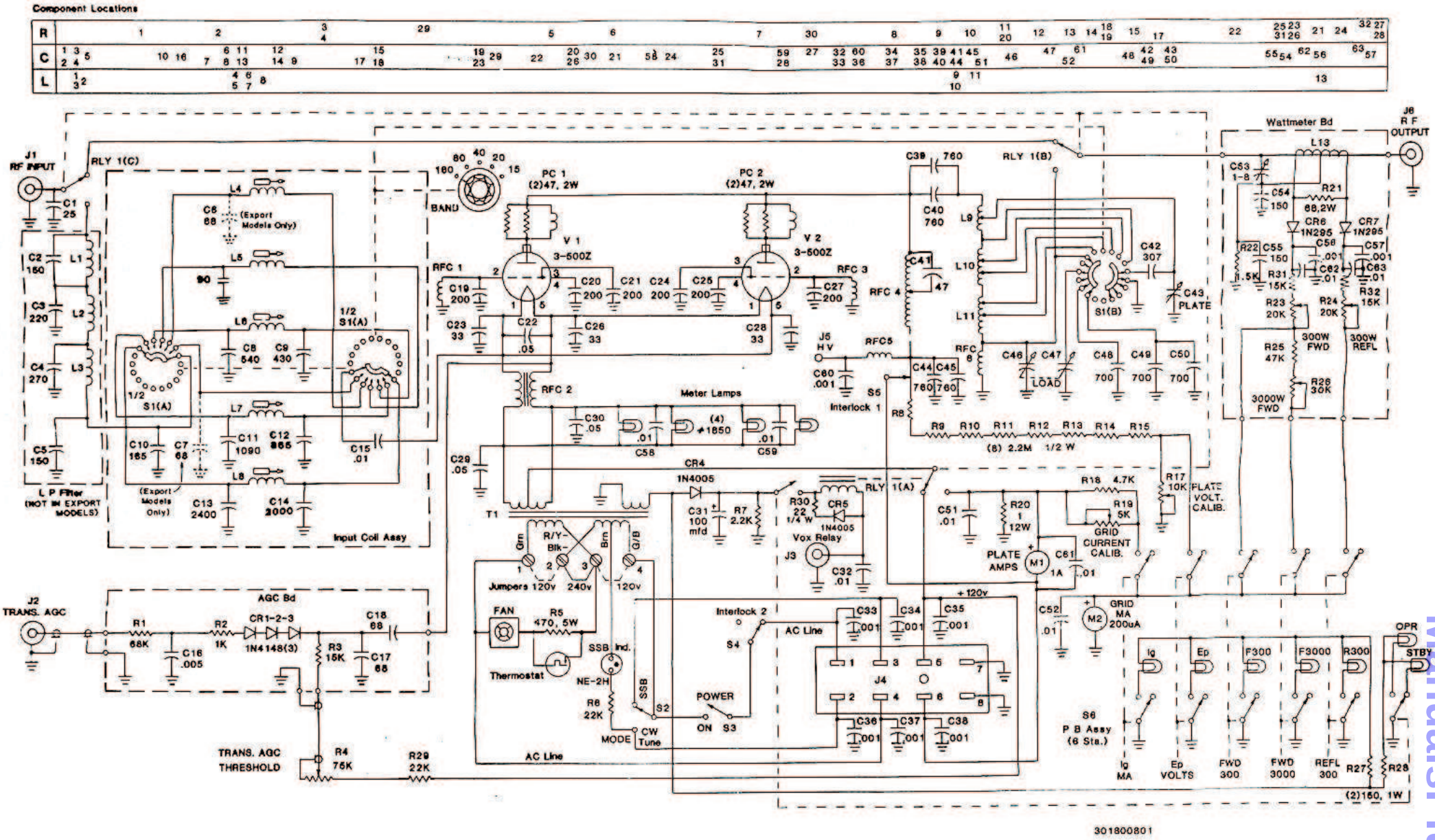

NOTE

Capacitors marked 1.0 to 2400 are in pf, and Capacitors marked .001 to .1 are in mfd unless otherwise noted.

Max - EA1DDO 1998.

Fig. 5-5 Model L 7 Linear Amplifier Schematic Diagram

ManualsPlus.com