ManualsPlus.com

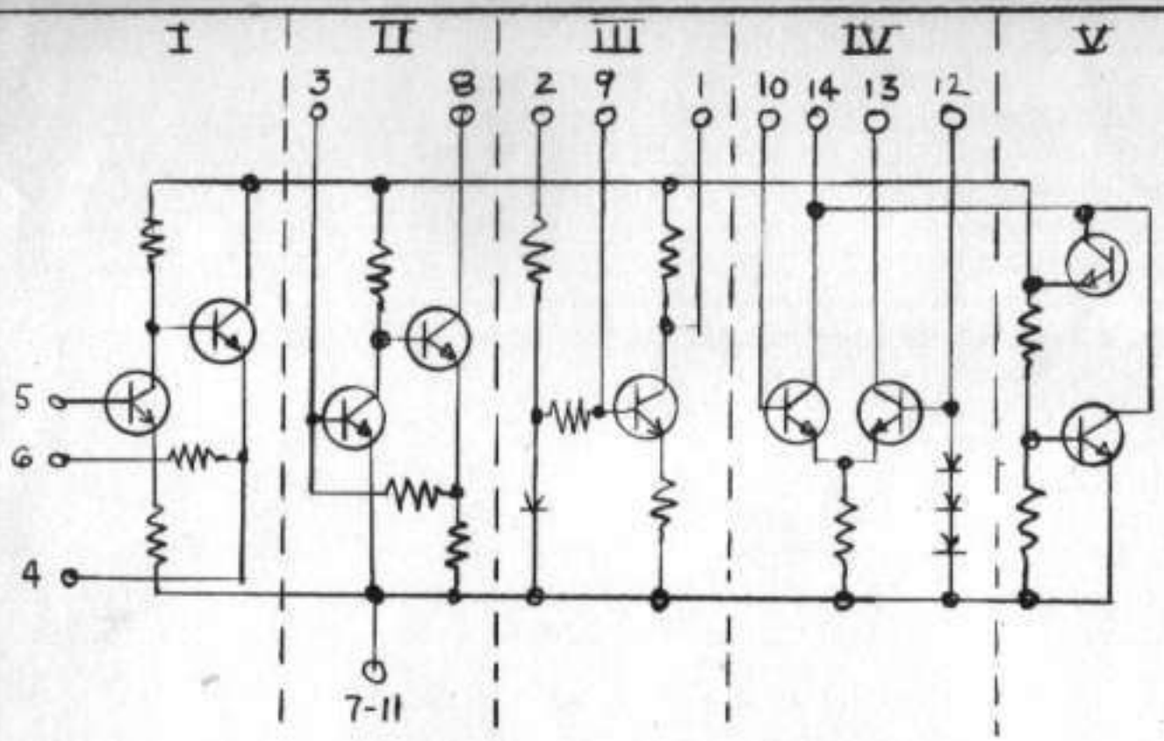

I C FUNCTION

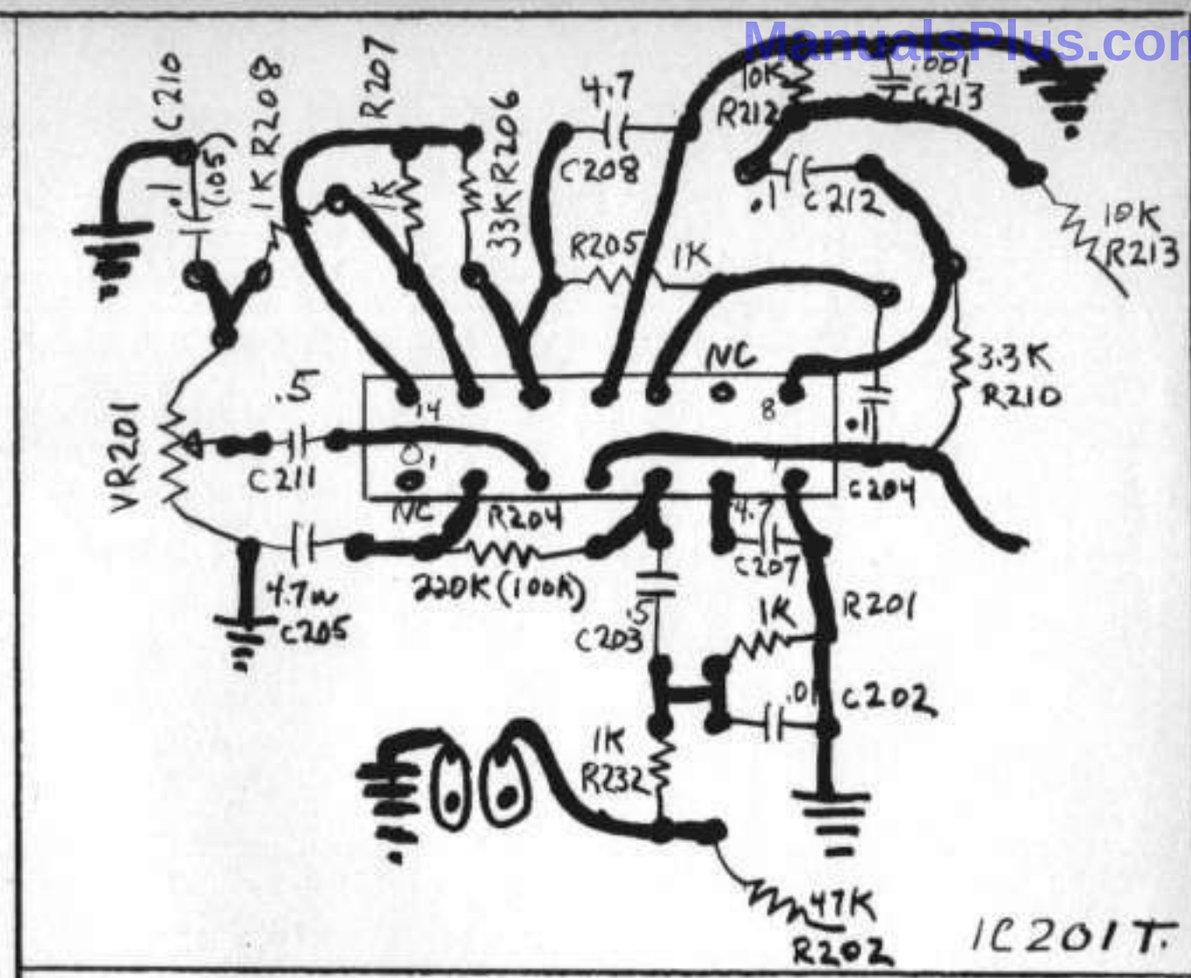

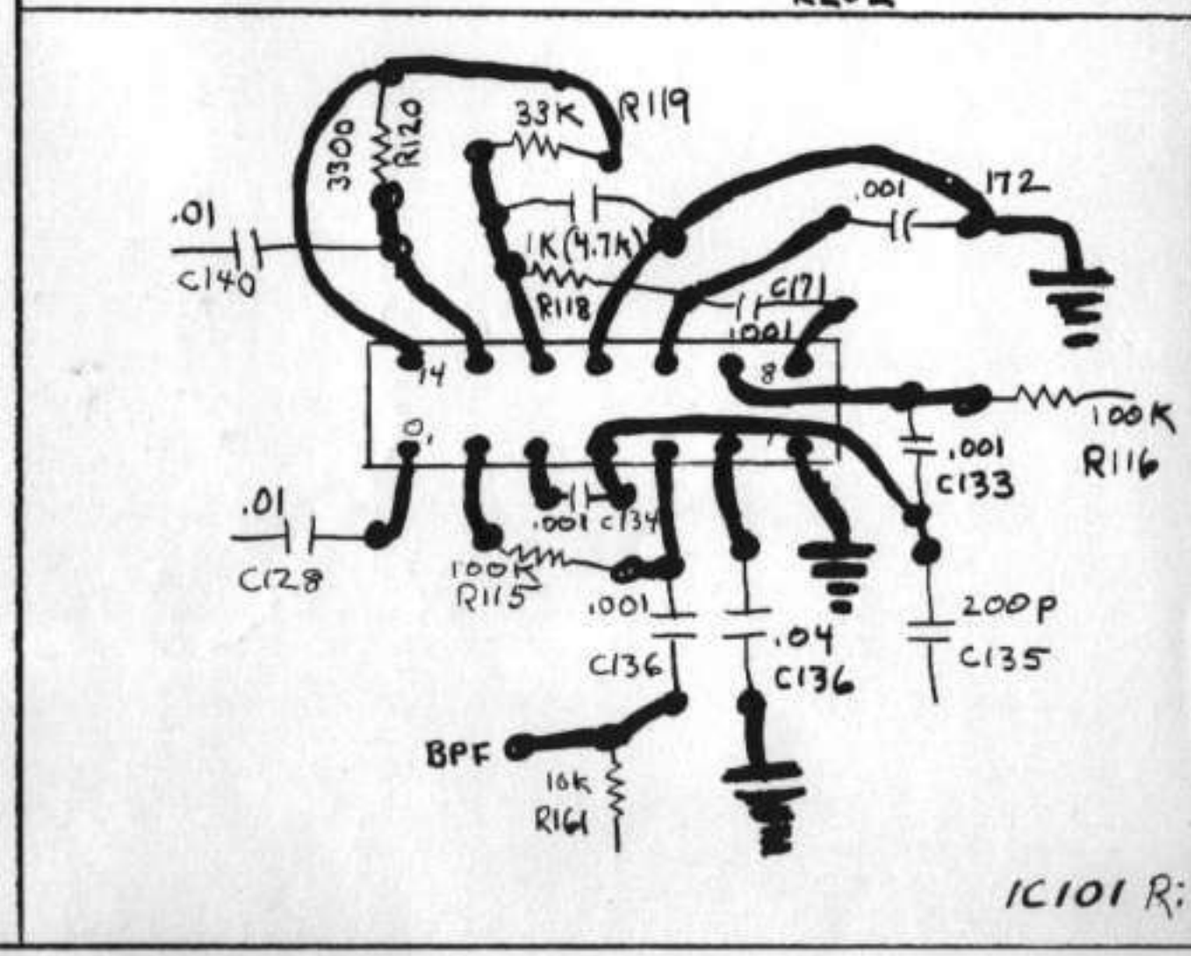

Receiver (IC101)

Section I - Emitter follower driving meter amp (Q109) and Sections II and III in IC.

Section II - Amplifier driving Section IV.

Section III - AVC amplifier for receiver front end.

Section IV - Limiter

Section V - Voltage regulator for Sections I, II and III. Section IV not regulated.

Transmitter (IC 201)

Section I - Microphone amplifier feeding Section IV.

Section IV - Amplifier stage fed by Section I, output of IV goes to deviation pot. then to input of II.

Section II - Amplifier stage fed by IV thru deviation pot, output feeds modulator.

Section III - Not used.

Section V - Regulator for I and II.