ManualsPlus.com

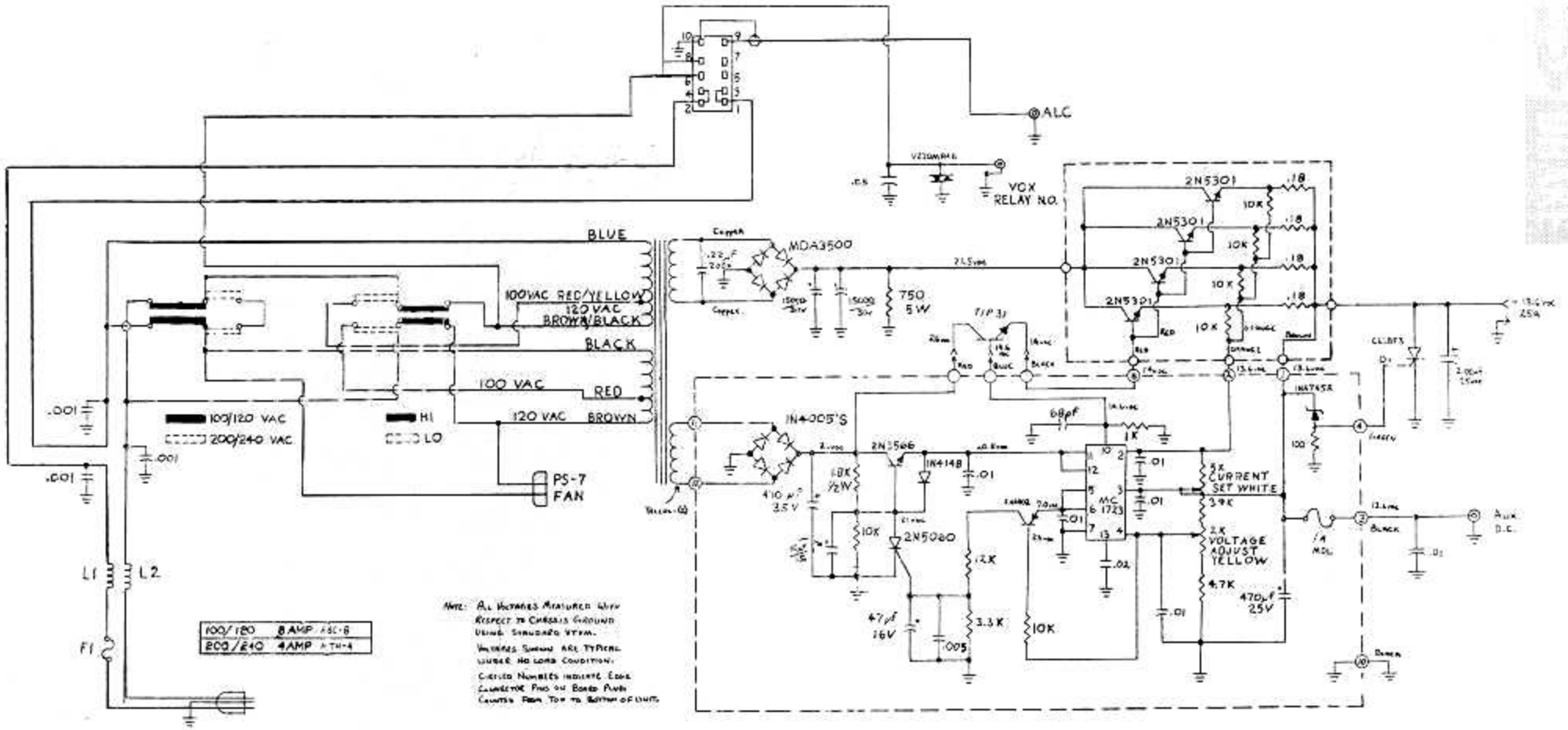

Max - EA1DDO 1998.

PS-7 Schematic Diagram