ManualsPlus.com

hallicrafters

OPERATING AND SERVICE INSTRUCTIONS

COMMUNICATION RECEIVER MODEL CRX-3

WARRANTY

"The Hallicrafter's Company warrants each new radio product manufactured by it to be free from defective material and workmanship and agrees to remedy any such defect or to furnish a new part in exchange for any part of any unit of its manufacture which under normal installation, use and service discloses such defect, provided the unit is delivered by the owner to our authorized radio dealer, wholesaler, from whom purchased, or, authorized service center, intact for examination, with all transportation charges prepaid within ninety days from the date of sale to original purchaser and provided that such examination discloses in our judgment that it is thus defective.

This warranty does not extend to any of our radio products which have been subjected to misuse, neglect, accident, incorrect wiring not our own, improper installation, or to use in violation of instructions furnished by us, nor extended to units which have been repaired or altered outside of our factory or authorized service center, nor to cases where the serial number thereof has been removed, defaced or changed nor to accessories used therewith not of our own manufacture.

Any part of a unit approved for remedy or exchange hereunder will be remedied or exchanged by the authorized radio dealer or wholesaler without charge to the owner.

This warranty is in lieu of all other warranties expressed or implied and no representative or person is authorized to assume for us any other liability in connection with the sale of our radio products."

hallicrafters

092-013257

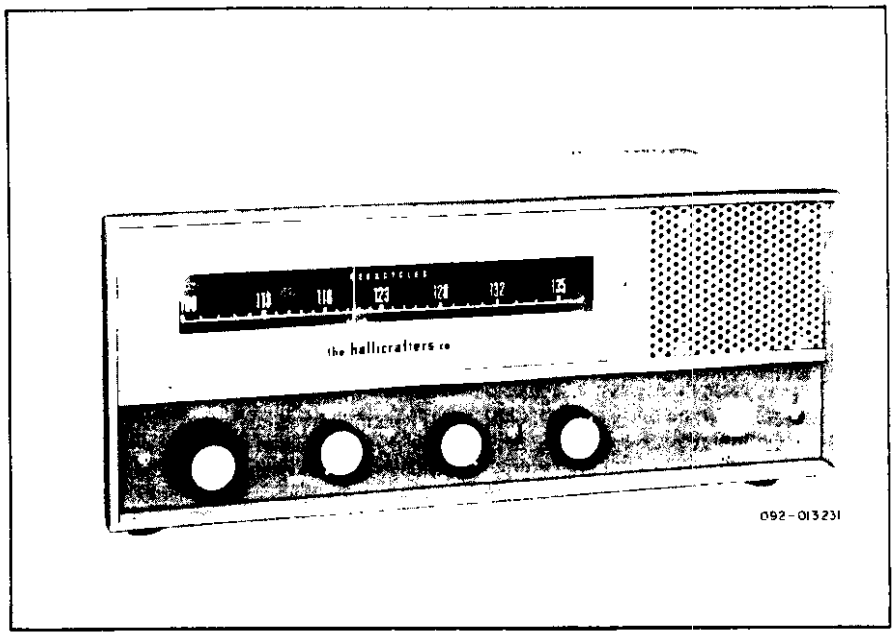

Figure 1. View of Model CRX-3 Receiver.

SECTION I

GENERAL DESCRIPTION

1-1. INTRODUCTION.

Your new Hallicrafters Model CRX-3 is a precision built, sensitive, reliable AM communications receiver providing complete coverage in the frequency range from 108 megacycles to 135 megacycles. Seven tubes, plus two silicon rectifiers are employed in advanced, efficient electronic circuitry to give maximum performance in the reception of the VHF Aviation services. These services include the receiving of emergency communications, landing control, central control, and VHF communications.

Tuning in the crowded portions of the 108-MC to 135-MC frequency band is controlled by vernier drive and fast drive controls. These controls are mounted on coaxial shafts which are coupled to a slide-rule pointer. The pointer traverses a dial calibrated directly in megacycles. An electronic squelch control permits easy and accurate setting of the squelch function. In addition to the manual tuning function, two optional crystal-controlled channels are available.

Other important and special features of the Model CRX-3 Receiver include . . . narrow selectivity for all possible future operation ... an external-internal speaker connector and switch ... and an accessory socket.

Careful attention should be directed to the installation and operating instructions that follow. These instructions will familiarize you with the routine necessary to insure satisfaction in the ownership of a Hallicrafters precision-built product.

ManualsPlus.com

SECTION II

TECHNICAL CHARACTERISTICS

RECEPTION	AM.
INTERMEDIATE FREQUENCIES	10.7 MC and 455 KC.
FREQUENCY COVERAGE	108 MC to 135 MC.
POWER SOURCE	105 volts to 125 volts AC, 50/60 cycles.
POWER CONSUMPTION	35 watts.
NUMBER OF TUBES	Seven tubes, plus two silicon rectifiers.
SPEAKER OUTPUT	Internal speaker provided. Toggle switch and two-contact, screw-type terminal strip provided on the chassis rear for alternate use of external 3-ohm to 4-ohm speaker.
ANTENNA INPUT	50-ohm to 75-ohm coaxial; pin-type receptacle provided on rear of chassis to accept a pin-type connector.
DIMENSIONS	13-1/2 inches wide, 5-3/4 inches high, and 8 inches deep.
SHIPPING WEIGHT	15.50 pounds.
NET WEIGHT	12.75 pounds.

SECTION III

INSTALLATION

3-1. UNPACKING.

After unpacking the receiver, examine it closely for damage that may have occurred in transit. Should any sign of damage be apparent, immediately file a claim with the carrier stating the extent of the damage. Carefully check the instructions on all shipping labels and tags before removing or destroying them.

3-2. LOCATION.

The receiver is equipped with rubber mounting feet for table-top or shelf mounting. In selecting a location, avoid excessively warm locations near radiators and heating vents; also, avoid drafty places. This latter precaution is particularly desirable if manual-controlled operation is intended. For proper ventilation, allow at least one inch of clearance between the back of the receiver and the wall.

3-3. POWER SOURCE.

The Model CRX-3 Receiver is designed to operate from a 105-volt to 125-volt 50/60 cycle AC power source. Power consumption is 35 watts.

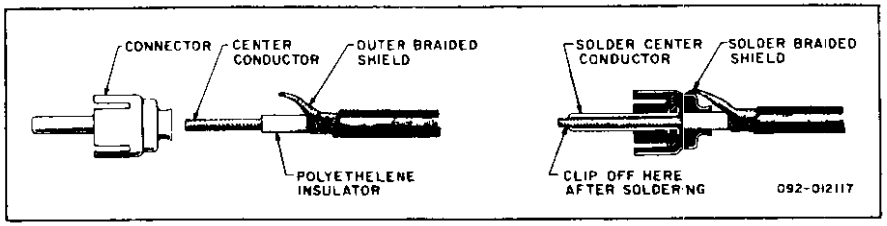

Figure 2. Fabricating the Antenna Input Cable.

IMPORTANT

Your power outlet must furnish AC (alternating current). If in doubt about your power source, contact your local power company prior to inserting the power cord in a power outlet. Plugging the cord into the wrong power source may cause extensive damage to the unit, requiring costly repairs.

3-4. ANTENNAS.

The radio frequency input to the receiver is designed for operation from a 50-ohm to 75-ohm coaxial transmission line, or lead-in, from a suitable outside antenna. The coaxial line allows long lead-ins to be used without impairing the performance of the antenna. The ground-plane vertical antenna is the most widely used type of outdoor antenna suitable for this application. Coaxial cable and ground-plane vertical antennas are available from a number of manufacturers and, in almost all cases, can be obtained from the dealer from whom this receiver was purchased.

Regardless of the antenna type used, it will be found that any given antenna will work best in one range of frequencies but, at the same time, will give satisfactory performance over the entire range of this receiver. Follow the instructions furnished by the antenna manufacturer and cut the antenna to your own requirements. Where you are interested in a specific frequency, cut the antenna to this frequency. Otherwise, the antenna may be cut to approximately 120 megacycles.

For local ground-wave reception, performance will depend generally on the height of the antenna. Place the antenna in the clear, and if possible, above the tree tops. The higher the antenna, the better the reception. Use any available natural supports, but use a chimney or smoke stack only as a last resort. The fumes from a chimney can be corrosive to the metal elements of the antenna and connections.

Use the antenna connector furnished to connect the coaxial line to the receiver. Strip and connect the line as shown in figure 2. These connections must be soldered to assure a good electrical connection.

3-5. EXTERNAL SPEAKER.

Screw terminals for an external speaker connection are located on the back of the chassis (see figure 3). These terminals can also be used for other external audio connections, such as headphones or a recorder. The switch on the back apron of the receiver selects either the internal speaker or the external connection.

Any size of external speaker may be used. Electrically, a permanent-magnet type speaker with a 3-ohm to 4-ohm voice coil is preferred. The 12-ohm resistor, connected across the terminals, may be removed when using the equipment with an external speaker.

When connecting to a recorder or to headphones, the 12-ohm resistor connected across the terminals in parallel with the external device should remain connected.

ManualsPlus.com

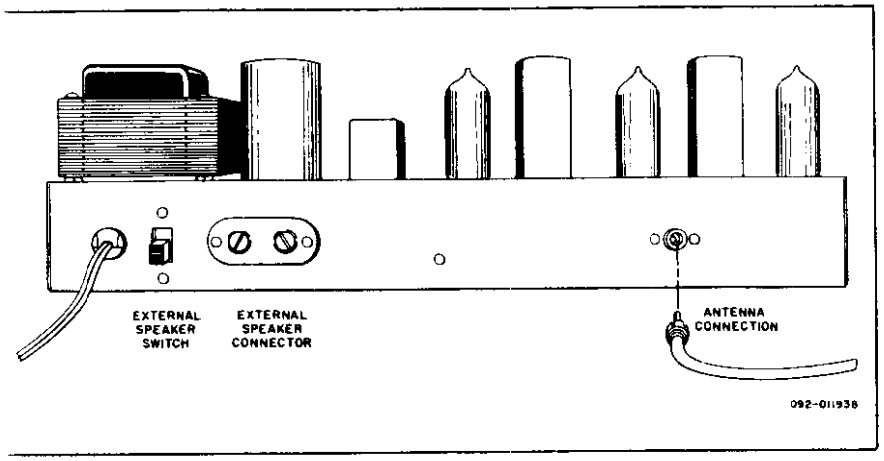

Figure 3. Rear View of Receiver Chassis.

-6. ACCESSORY SOCKET.

An accessory socket is located on the top deck of the receiver, immediately ehind the speaker. Ground, power, and signal voltages have been brought out to ıis socket. The accessory socket will furnish 12-volt AC at 150 MA and 180-volt)C power at 0.01 amperes for possible future accessory devices.

SECTION IV

OPERATION

-1. GENERAL.

There are only four controls on the front panel of the Model CRX-3 Receiver. few minutes of air-testing will familiarize you with the operation of each control ıd the effect each control has on the performance of the receiver.

-2. TUNING CONTROL.

The TUNING control consists of a vernier-drive and a fast-drive control mount-ı on coaxial shafts and is located on the extreme left of the front panel of your re-ɜiver. The rear knob, fast drive, will move the slide-rule pointer relatively fast om one section of the dial to another to tune-in a station. The vernier drive, front ıob, is used as a fine-tuning adjustment to accurately tune-in a desired station in crowded portion of the band.

-3. VOLUME CONTROL.

The VOLUME control, in the extreme counterclockwise position, turns the ·ceiver off. To turn the receiver on, rotate the VOLUME control clockwise approxi-ıately one-half from the OFF position. Tune to a station and readjust the VOLUME ɔntrol to the desired listening level.

-4. SQUELCH CONTROL.

The SQUELCH control is an automatic electronic switch. This switch silences e receiver when no radio signals are present on a channel. When a radio station ·mes on the channel, the switch will automatically open and will stay open as long the radio carrier tuned-in is on the air. The purpose of this switch is to allow e VOLUME control to always be set at a comfortable listening level for message ·ception, and to silence the noise between radio transmissions.

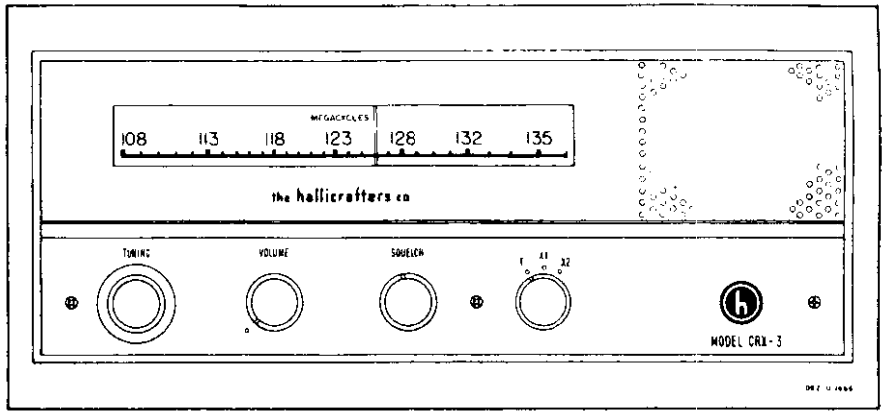

Figure 4. Front Panel View of Receiver.

As the SQUELCH control is rotated in a clockwise direction, a point will be reached in the rotation where the electronic switch opens, allowing off-signal noise to come through. Rotate this control back in a counterclockwise direction until all noise is silenced. This adjustment is to be made when no stations are on the air. A further adjustment can be made, depending upon the weakest signal to be received.

4-5. T-X1-X2 (SELECTOR) CONTROL.

For manual tuning operation, the selector switch should be placed in the T position. In this position, you may tune in stations anywhere on the band and set the VOLUME and SQUELCH controls as desired.

Two crystal positions have been provided for owners who will only be using the receiver on one or two frequencies and who wish to devote a minimum of time to tuning and adjusting the receiver.

Quartz frequency control crystals may be purchased and installed with a minimum of effort.

Assume a crystal is on hand for a specific desired channel for this receiver. Insert the crystal into the socket marked X1 on the top deck of the receiver chassis near the front panel. Turn the receiver on and allow 15 minutes for warmup. Rotate the selector knob to the X1 position. Connect a probe on a DC VTVM to the test point on the crystal oscillator coil nearest the front panel of the receiver (see figure 7). Set the range on the VTVM to the minus voltage, 0 to 100 scale. Tune the coil slug nearest the front panel until a maximum reading is obtained on the meter. With an antenna connected, stations on the desired channel should be heard. Set the main-tuning pointer to approximately the same frequency being received in the crystal-controlled position. Note the pointer position which gives best reception. You can then switch from crystal control to manual tuning and back, merely by resetting the pointer at the noted position.

Where a good quality crystal has been used, the receiver is now locked on the desired channel. Reset VOLUME and SQUELCH controls as required. The receiver should require only occasional resetting of the VOLUME and SQUELCH controls.

Occasionally it is possible for permissable tolerances on your quartz crystal and on the quartz crystal at the radio transmitter you are monitoring to add up enough to cause mistuning or off-channel errors. The crystal in your receiver can be shifted slightly in frequency to compensate for reasonable errors by inserting a tuning tool through the hole in the bottom of the cabinet to trim the proper crystal oscillator coil.

ManualsPlus.com

When the proper crystals are obtained, you should experience no difficulty in setting the receiver on the correct frequency. Crystals may be ordered from the dealer from whom you purchased the receiver or directly from The Hallicrafters Company Service Department.

4-6. CRYSTAL ORDERING INFORMATION.

When ordering crystals for your receiver, follow the information given below:

A. Specify receiver model (CRX-3) and the serial number.

B. Specify crystal type as follows:

One each type CR-23/U or commercial equivalent crystal, Hallicrafters part number 019-002842.

C. Compute the required crystal frequency from the transmitter frequency. The following formula is to be used in computing the crystal frequency. An example is given using a transmitting frequency of 121.5 megacycles.

$$\text{Crystal Frequency} = \frac{121.5 + 10.7}{4} \text{ MC}$$

$$= \frac{132.2}{4} \text{ MC}$$

$$= 33.0500 \text{ MC}$$

D. Specify the crystal frequency (not the signal or dial frequency) in six digit numbers.

Example: 32.9250 megacycles, 34.4000 megacycles, 38.0125 megacycles.

Do not estimate the frequency from the dial reading on the receiver. Obtain this information from a reliable source. Information on VHF radio frequencies can be obtained at a very small cost from the "Sectional Aeronautical Charts," printed by the "Coast and Geodetic Survey." A catalog of these charts can be obtained from dealers in aviation supplies at the larger airports. The charts are also obtainable from the same suppliers.

The non-professional user of this equipment will find that excellent stability and reliability can be obtained from the Model CRX-3 without the crystal-control feature. On the other hand, when the user requires this unit to receive signals directed specifically to him, the use of the crystal-control feature is strongly recommended. The increased reliability justifies the comparatively small additional cost.

SECTION V

SERVICE DATA

5-1. CHASSIS REMOVAL.

The chassis and front panel assembly are removable as a unit. Remove the four rubber mounting feet. Slide the chassis out through the rear of the cabinet. Care should be taken to make certain that the tuning dial is at the low end of the band (tuning capacitor fully closed) before removing the chassis.

5-2. TUBE AND LAMP REPLACEMENT.

To gain access to the tubes and dial lamps, see paragraph 5-1, CHASSIS REMOVAL.

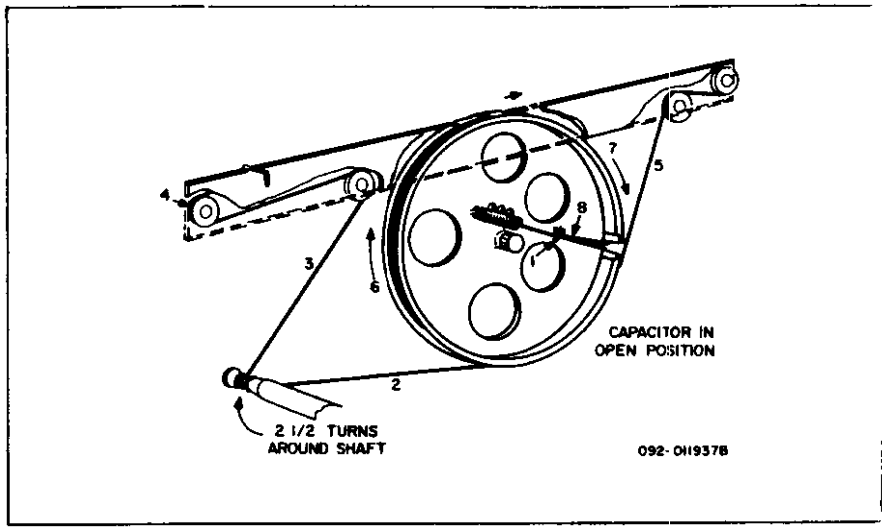

Figure 5. Dial Stringing Diagram.

5-3. DIAL CORD RESTRINGING.

Remove the chassis assembly from the cabinet as described in paragraph 5-1. String the dial cord by following the numerical sequence shown in figure 5.

5-4. SERVICE OR OPERATION QUESTIONS.

For further information regarding operation or servicing of your Model CRX-3 Receiver, contact your Hallicrafters dealer. The Hallicrafters Company maintains an extensive system of Authorized Service Centers where any required service will be performed promptly and efficiently at a nominal charge. All Hallicrafters Authorized Service Centers display the sign shown at the right.

For the location of the one nearest you, consult your local dealer or telephone directory. Make no service shipments to the factory, as The Hallicrafters Company will not accept the responsibility for unauthorized shipments.

The Hallicrafters Company reserves the privilege of making revisions in current production of equipment and assumes no obligation to incorporate these revisions in earlier models.

SECTION VI

ALIGNMENT

6-1. GENERAL.

The Model CRX-3 Receiver has been carefully aligned at the factory by specially trained personnel using precision equipment. Alignment of the receiver should not be attempted until all other possible causes of faulty operation have been investigated. Alignment should not be required unless the receiver has been tampered with or component parts in the RF or IF stages have been replaced. Alignment should only be attempted by persons experienced in this work, using the proper test equipment.

ManualsPlus.com

IMPORTANT

Where it is planned to use the crystal-controlled reception feature of this receiver, it is absolutely essential that the 455-KC IF transformer be exactly centered on frequency. The crystal correlation will only hold when this circuit is properly on frequency.

The oscillator, RF, and tunable IF must track together, according to the following formula:

OSCILLATOR FREQUENCY = RF + 10.7 MC

With the receiver turned off, this tracking can be checked using a grid-dip meter.

6-2. TEST EQUIPMENT REQUIRED.

The following test equipment, or its approved equivalent, is to be used in performing necessary alignment on the Model CRX-3 Receiver.

1. Signal Generator, Measurements Corporation Model 80; to be used for RF alignment.

2. A good quality sweep generator, in conjunction with an oscilloscope; to be used for IF alignment. Use procedure given in paragraph 6-4.

3. A good quality signal generator, such as the Measurements Corporation Model 65B; to be used as an alternate for the IF alignment if a sweep generator and/or oscilloscope is not available. Use alternate procedure given in paragraph 6-5.

NOTE

Only quality signal generators which operate on fundamentals across their entire range are to be used in this alignment. Generators operating on harmonics should not be used.

4. DC Vacuum Tube Voltmeter (VTVM), RCA Senior Voltohmyst; to be used for RF alignment.

5. Hexagonal alignment tool, preferably plastic.

6. Nylon screwdriver blade (with metal blade on opposite end, if one is available).

6-3. INITIAL CONTROL SETTINGS.

Before the alignment is begun, the front panel controls should be set as follows:

VOLUME	Approximately centered (one-half clockwise)
T-X1-X2 (Selector)...	T (Manual tuning)
SQUELCH	Open
TUNING	As required

6-4. IF ALIGNMENT PROCEDURE.

1. 455-KC IF Alignment. - Connect sweep generator horizontal output to horizontal connection on oscilloscope. Connect RF output from the sweep generator to pin 1 of V4. Set sweep generator frequency to 455 KC. Connect probe from vertical connection on oscilloscope to pin 9 of V6. Adjust alignment points A (T3 secondary) and B (T3 primary) until the signal on the oscilloscope is the same as that shown in figure 6.

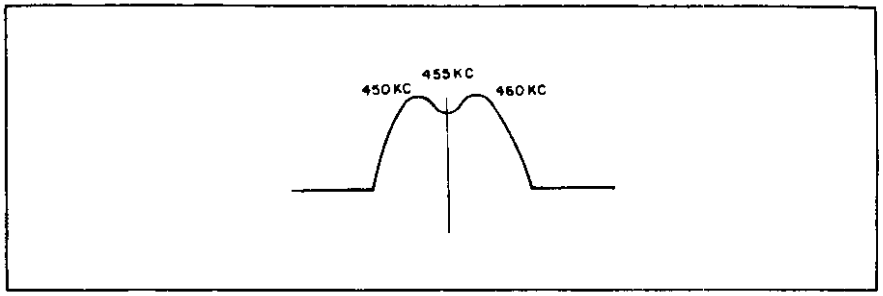

Figure 6. Alignment Waveform.

Move the sweep generator to pin 2 of V3. Adjust alignment points C (T2 secondary) and D (T2 primary) for a symmetrical signal the same as shown in figure 6.

NOTE

The oscilloscope trace should be positioned so that it is symmetrical about 455 KC. The IF must be centered on 455 KC, or 10.7 MC will be inaccurate; and, most important, the crystal-control correlation will be wrong.

2. 10.7 MC IF Alignment. - Reset the sweep generator to exactly 10.7 MC and connect the RF output from the sweep generator to pin 2 of V2. The signal presentation on the oscilloscope will resemble that shown in figure 6, except it will be centered around 10.7 MC. Adjust alignment points E (T1 secondary) and F (T1 primary) until the scope presentation is symmetrical and the 10.7-MC marker is exactly centered.

6-5. ALTERNATE IF ALIGNMENT PROCEDURE.

This procedure is to be followed if a sweep generator and/or oscilloscope is not available.

1. 455-KC IF Alignment. - Set the signal generator to exactly 455 KC and connect it to pin 1 of V4 through a 0.01 mfd capacitor. Connect the DC VTVM to pin 5 of the accessory socket. Set the signal generator to maintain an output level at approximately mid-scale. Adjust alignment points A and B for maximum indication on the VTVM.

Move the signal generator to pin 2 of V3. Adjust alignment points C and D for maximum indication on the VTVM.

Detune the signal generator 10 KC above and below 455 KC. The output should be reasonably flat on top and symmetrical about the 455-KC center frequency. Retouching one or two of the alignment points should give a symmetrical output.

2. 10.7-MC Alignment. - Set the signal generator to 10.7 MC. Move the generator connection to pin 2 of V2. Adjust alignment pins E and F for maximum indication on the VTVM.

This completes the IF alignment. All of the RF alignment procedure which follows can be completed using the Model 80 Signal Generator connected as specified and the DC VTVM connected to pin 5 of the accessory socket.

ManualsPlus.com

ManualsPlus.com

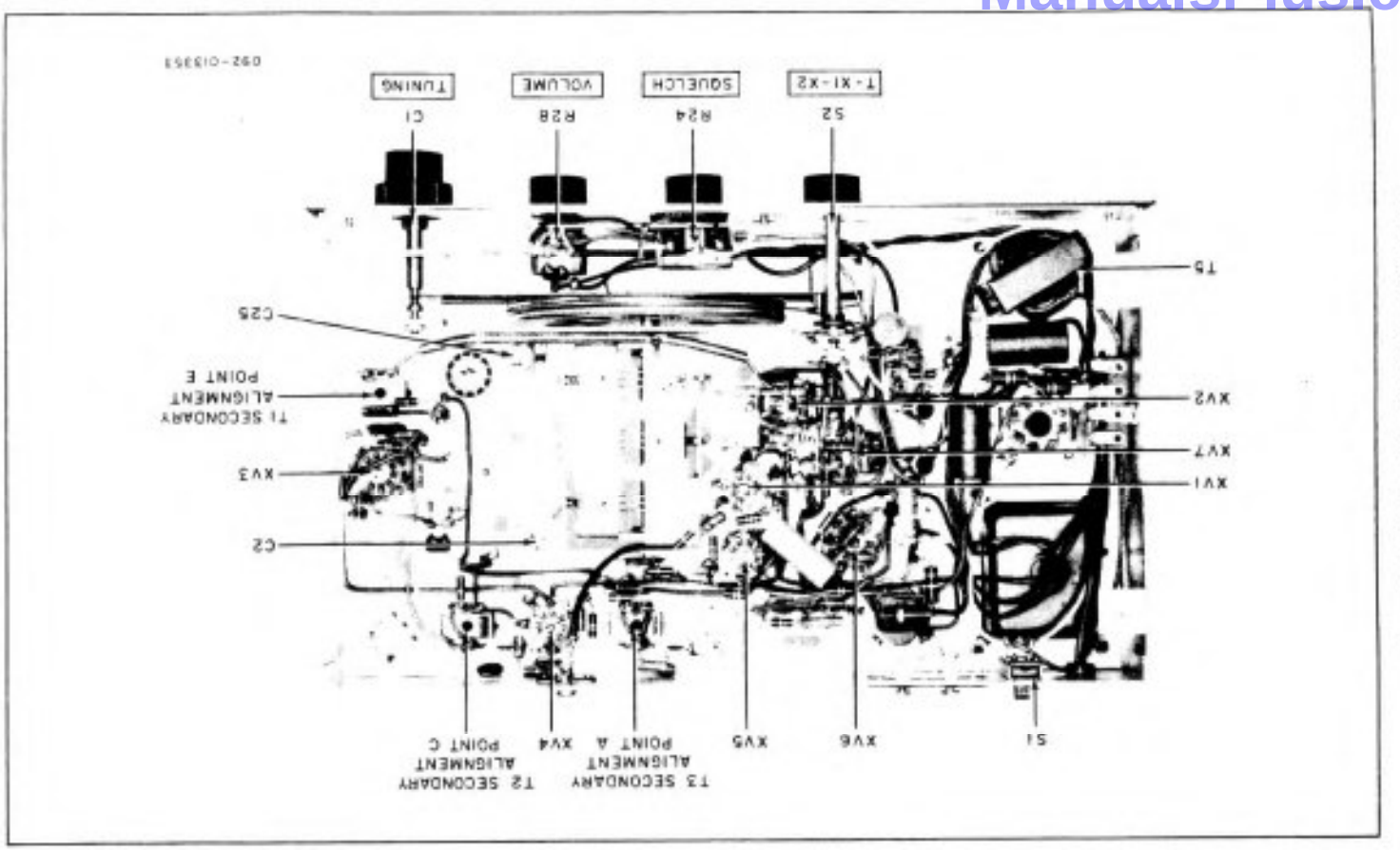

Figure 8. Bottom Chassis View of Receiver.

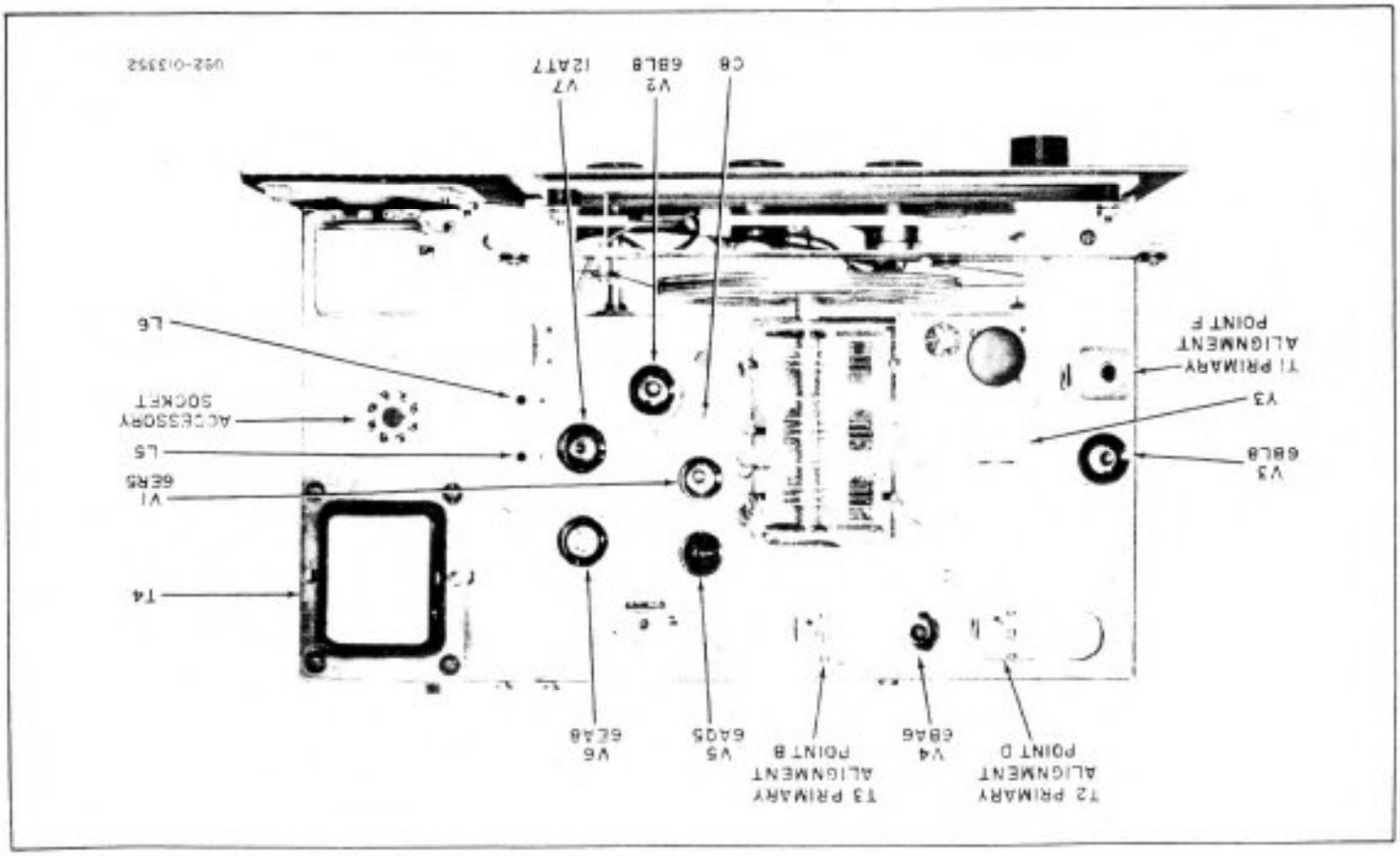

Figure 7. Top Chassis View of Receiver.

ManualsPlus.com

6-6. RF ALIGNMENT PROCEDURE.

Connect the signal generator to the antenna jack (J1). Set the receiver dial to 135 MC. Set the generator output to approximately 10 or 20 microvolts. Rock the generator slowly above and below 135 MC until the generator signal is heard in the receiver. Adjust C25 (oscillator trimmer) until the dial calibration is correct. Adjust C2 and C8 for maximum indication on the VTVM. When these circuits are peaked, an immediate performance check can be made before proceeding with the next step in the alignment.

Reduce the generator output to zero. Close the SQUELCH control to the point where the noise is just silenced. Increase the generator output io 1.0 microvolt. As the receiver is slowly tuned through the signal, the squelch should open and close.

Set the receiver dial to 115 MC. Reset the generator output to 10 or 20 microvolts. Rock the generator slowly above and below 115 MC until the generator signal is heard in the receiver. Adjust L3 untii dial calibration is correct. Adjust L1 and L2 for maximum indication on the VTVM. Repeat this procedure a few times until a negligible increase in output is obtained by further alignment. Coils L1, L2, and L3 are adjustable by varying the spacing between the windings with an insulated tool.

SERVICE REPAIR PARTS LIST

Schematic Symbol	Description	Hallicrafters Part Number
	CAPACITORS	
C1A,B,C	Variable, TUNING	048-000528
C2,8	Variable, 0.5 mmf to 5 mmf, Tubular Trimmer	044-000543
C3	15 mmf, 10%, N750, Ceramic Tubular	491-108150-95
C4,7 11, 15,29,37, 41,42	0.001 mfd, 600V, GMV, Ceramic Disc	047-200230
C5,9,10, 12,13,17, 20,24,36, 39	0.01 mfd, +80%, -20%, 600V, Ceramic Disc	047-100217
C6	24 mmf, 10%, N750, Ceramic Tubular	491-108240-95
C14	105 mmf, 2%, 300V, Plastic Mica	493-121050-324
C16	36 mmf, 2%, 300V, Plastic Mica	481-151360
C18	0.05 mfd, +80%, -20%, 50V, Ceramic Disc	047-001144
C19,23	0.005 mfd, +80%, -20%, 50V, Ceramic Disc	047-001139
C21,30	200 mmf, 10%, N750, Ceramic Tubular	491-156201-95
C22	13 mmf, 2%, 300V, Plastic Mica	493-910130-321
C25	Variable, 1.5 mmf to 7 mmf, Ceramic Trimmer	044-000544
C26	47 mmf, 5%, N220, Ceramic Tubular	491-105470-63
C27,38	10 mfd, 150V, Electrolytic	045-200307
C28	33 mmf, 2%, 300V, Plastic Mica	481-151330
C30	51 mmf, 2%, 300V, Plastic Mica	481-151510
C32	6 mmf, ±0.5 mmf, N750, Ceramic Tubular	491-002060-93
C33	51 mmf, 10%, N750, Ceramic Tubular	491-106510-95
C34,48	0.005 mfd, 20%, 600V, Ceramic Disc	047-100442
C40	0.1 mfd, 50V, Ceramic Disc	047-001148
C43	430 mmf, 3%, 300V, Plantic Mica	481-161431
C44,45	0.01 mfd, 1400V, Ceramic Disc	047-001309
C46A,B	2 x 40 mfd, 250V, Electrolytic	045-000742
C47	0.002 mfd, 20%, 600V, Ceramic Disc	047-100395
C49	50 mfd, 12V, Electrolytic	045-200278
C51	2.2 mmf, 10%, 500V	047-200403
C52	1 mmf, 10%, Gimmick	047-200403-2

Schematic Symbol	Description	Hallicrafters Part Number
	RESISTORS	
R1,31	1 megohm	451-252105
R2,9,16	10K ohm	451-252103
R3	470K ohm	451-252474
R4,8	1000 ohm	451-252102
R5,10,13 25,32	100K ohm	451-252104
R6	4700 ohm	451-252472
R7	68K ohm	451-252683
R11,15	1500 ohm	451-252152
R12	100 ohm	451-252101
R14,21, 28,39	47K ohm	451-252473
R17,19,33	22K ohm	451-252223
R18,36,40	560 ohm	451-252561
R20,22	150K ohm	451-252154
R23	22K ohm, 1 watt	451-352223
R24	Variable, 10K ohm, 2 watt, SQUELCH	025-001974
R27	10 megohm	451-252106
R28	Variable, 1 megohm, VOLUME	025-001973
R29	27 ohm, 1 watt	451-352270
R30	150 ohm, 2 watt	451-352151
R34	500K ohm	451-252564
R35	390 ohm	451-252391
R38	10K ohm, 1 watt	451-352103
R37	2.2 megohm	451-252225

* All RESISTORS are carbon type, 10%, 1/2 watt unless otherwise stated.

Schematic Symbol	Description	Hallicrafters Part Number
	COILS AND TRANSFORMERS	
L1	Coil, Antenna	051-003518
L2	Coil, Mixer	051-003316
L3	Coil, Oscillator	051-003519
L4	Coil, RF Choke, 2.7 μH	053-100470
L5,6	Coil, Crystal Oscillator	051-003318
L7	Coil, RF Choke, 0.47 μH	053-000684
T1	Transformer, IF (10.7 MC)	050-000774
T2,3	Transformer, IF (455 KC)	050-000764
T4	Transformer, Power	052-000934
T5	Transformer, Output	055-000457
	TUBES AND DIODES	
V1	Electron Tube, Type 6ER5, RF Amplifier	090-901461
V2	Electron Tube, Type 6BL8, First Mixer-Oscillator	090-901431
V3	Electron Tube, Type 6BL8, Second Mixer-Oscillator	090-901431

Schematic Symbol	Description	Hallicrafters Part Number
	TUBES AND DIODES (CONT)	
V4	Electron Tube, Type 6BA6, IF Amplifier	090-901112
V5	Electron Tube, Type 6AQ5, Audio Output	090-901331
V6	Electron Tube, Type 6EA8, Squelch and First Audio	090-901350
V7	Electron Tube, Type 12AT7, Crystal Oscillator	090-900034
CR1	Diode, Type 1N294A, Detector	019-002736
CR2,3	Diode, Silicon, Type 1N3194, Rectifier	019-002769
	MISCELLANEOUS	
	Cabinet Assembly	150-001545
	Clip, IF Transformer Mounting	076-100385
J1	Connector, Antenna, Coaxial	036-100041
Y3	Crystal (10.245 MC)	019-002795
	Dial Cord	038-100049
	Dial Pointer	082-000498
	Dial Scale, Calibrated	083-000944
	Foot, Rubber	016-101469
	Front Panel	152-000095
	Knob, Selector and VOLUME	015-001572
	Knob, SQUELCH	015-001571
	Knob, TUNING (Coarse)	015-001570
	Knob, TUNING (Fine)	015-001569
LM1,2	Lamp, Indicator, Type NO. 47	039-100004
	Line Cord	087-100078
	Lock, Line Cord	076-200397
XV1,4,5	Socket, 7-Pin Miniature	006-200730
XV2	Socket, 9-Pin Miniature (Mica)	006-200493
XV3,6,7	Socket, 9-Pin Miniature (Wafer)	006-000907
	Socket, Crystal (Y1 and 2)	006-000984
	Socket, Crystal (Y3)	006-100320
	Socket, Octal (Accessory)	006-200760
	Socket, Pilot Lamp Assembly (L. H.)	086-000595
	Socket, Pilot Lamp Assembly (R. H.)	086-000596
	Speaker	085-000211
	Spring, Crystal Retaining	075-000837
	Spring, Dial Cord	075-100012
	Switch, Slide (SPDT)	060-200477
	Switch, Rotary, Selector (T-X1-X2)	060-002398
	Terminal Board (3.2 Ohm, GND)	088-100020
	Trim Strip, Cabinet	007-000803

ManualsPlus.com

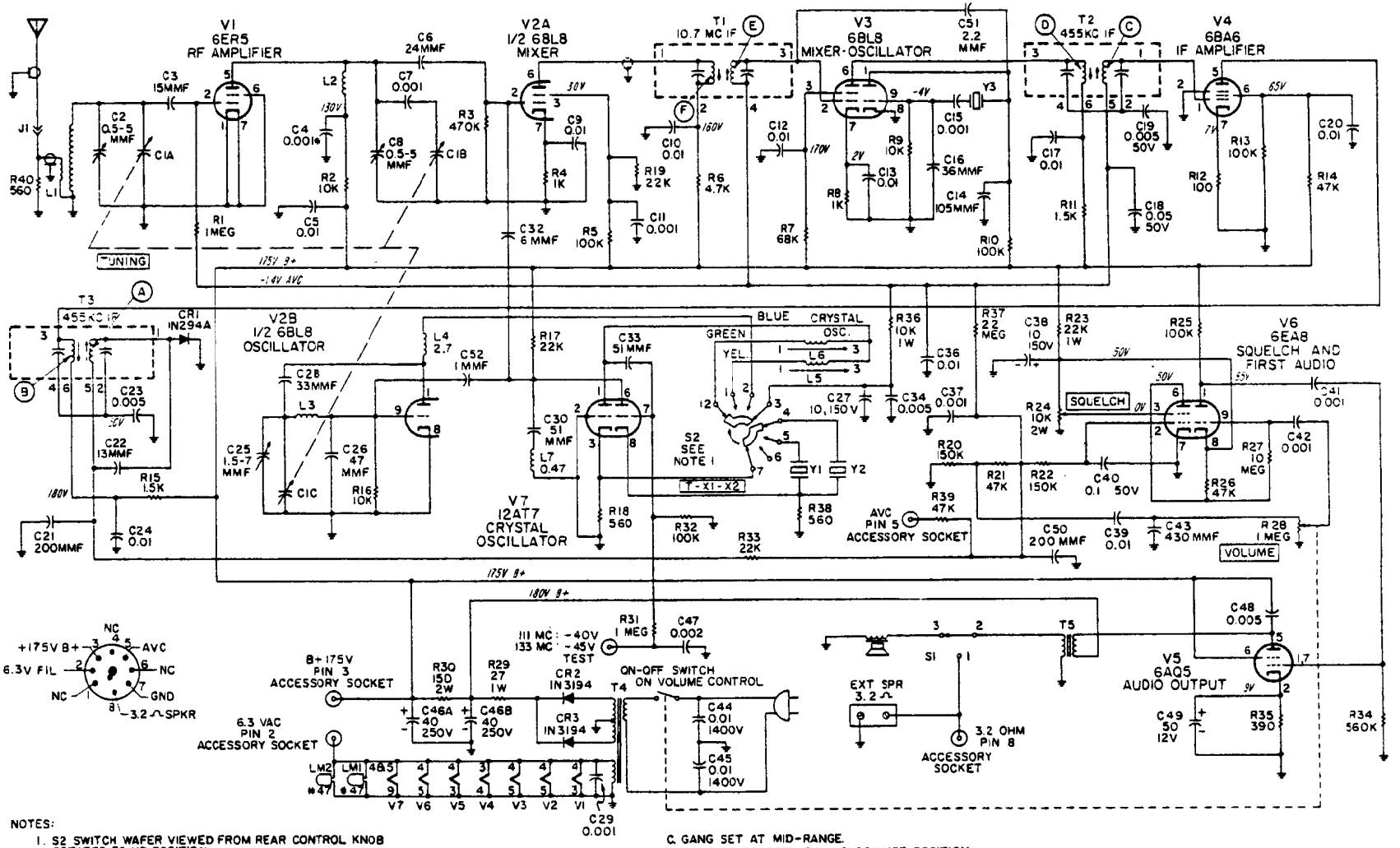

NOTES:

1. S2 SWITCH WAFER VIEWED FROM REAR CONTROL KNOB ROTATED TO X2 POSITION.
2. * THIS CAPACITOR GROUND CONNECTION CRITICAL.
3. VOLTAGE READINGS TAKEN UNDER FOLLOWING CONDITIONS:
   A. LINE VOLTAGES 117 VAC.
   B. ALL VOLTAGES ARE DC AND POSITIVE UNLESS OTHERWISE NOTED.
   C. GANG SET AT MID-RANGE.
   D. SQUELCH CONTROL FULL CLOCKWISE POSITION.

Figure 9. Schematic Diagram of the Model CRX-3 Receiver.

ManualsPlus.com