ManualsPlus.com

ECHOPHONE RADIO MFG. CO.

MODEL EC-1

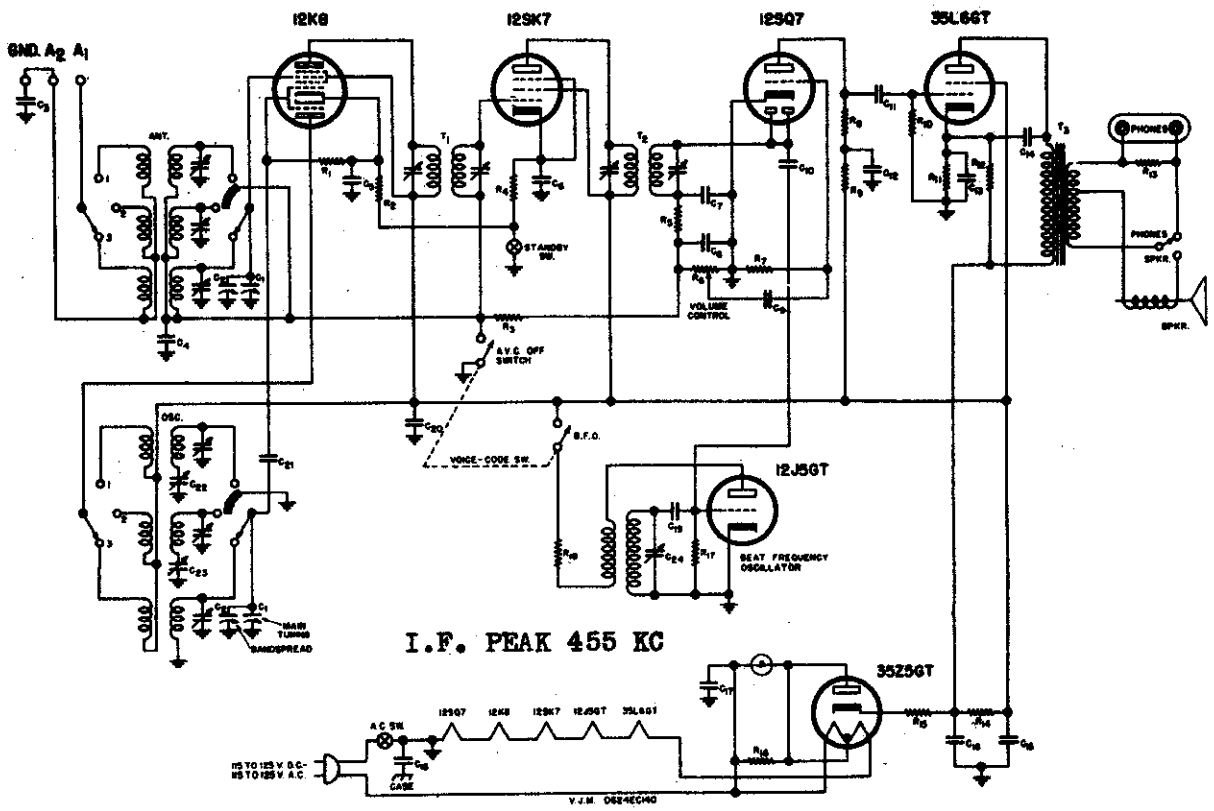

I.F. PEAK 455 KC

C1	530 mmf	Main tuning	16	40. mfd	150		4	400
2		Band Spread	17	.02 mfd	400		5	50,000
3	.01 mfd	400	18	.25 mfd	200		6	500,000
4	.05 mfd	200	19	150 mmf	Section of C24		7	10,000,000
5	.02 mfd	400	20	.05 mfd	200		8	250,000
6	.05 mfd	200	21	50 mmf			9	100,000
7	100 mmf		22	600 mmf	Pad		10	500,000
8	100 mmf		23	1,900 mmf	Pad		11	150
9	.005 mfd	200	24	450 mmf	BFO Trimer		12	7,500
10	10 mmf						13	15
11	.01 mfd	400					14	750
12	.05 mfd	200	R1		50,000		15	25
13	20. mfd	25	2		300		16	300
14	.01 mfd	400	3		2,000,000		17	50,000
15	30. mfd	150					18	500

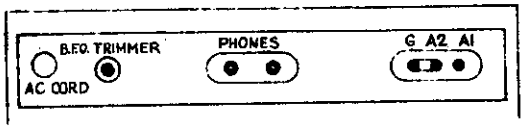

TRIMMER LOCATION

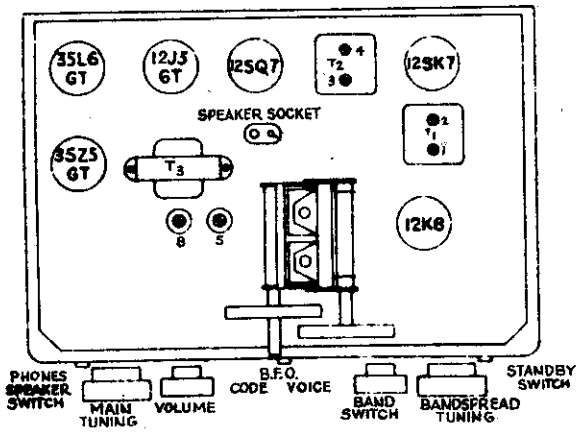

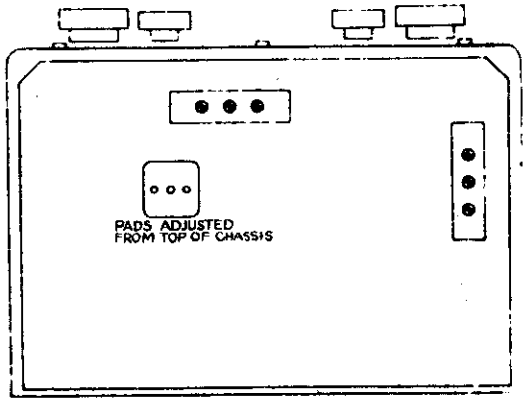

©John F. Rider