ManualsPlus.com

MODEL S-27
ULTRA HIGH FREQUENCY RECEIVER

FREQUENCY MODULATION
and
AMPLITUDE MODULATION

INSTRUCTIONS FOR OPERATING ALIGNMENT and SERVICING

the hallicrafters co.
A Subsidiary of Northrop Corporation
600 HICKS ROAD • ROLLING MEADOWS, ILLINOIS 60008

AMPLITUDE FREQUENCY MODULATION

ManualsPlus.com

Appreciation of the basic differences between amplitude and frequency modulated signals will be of help in obtaining the maximum in performance from the Model S-27 HALLICRAFTERS Receiver.

Amplitude modulation has been the accepted and usual form of impressing intelligence upon the transmitted radio signal. When this radio signal is amplitude modulated, the modulating or audio signal - speech or music - is combined with the radio signal which causes it to alternately increase and decrease in amplitude, these variations taking place at a frequency, or rate, determined by the frequency of the modulating sound.

By direct contrast, a frequency modulated signal consists of a carrier which remains constant in amplitude. When modulation takes place under this system the frequency, and not the amplitude, of the radiated signal is varied - the rate, or speed, of variation being determined by the frequency of the audio modulating signal. In addition, the stronger the audio modulating signal the greater will be the change in frequency of the radio signal. Under such an arrangement the band width (that through which the carrier of the FM signal is swung) is determined by the maximum shift in frequency which is occasioned by the amplitude, but not the frequency of the modulating signal.

In general, a frequency-modulation receiver has practically all the same components that an amplitude modulation receiver has with the exception of the detection systems.

Fig. 1 shows a block diagram of the S-27 Receiver incorporating both the amplitude and frequency modulation systems. We have first the RF amplifier which increases the useful sensitivity and image ratio of the receiver in both cases. In the case of the FM receiver, a stronger signal will be delivered to the limiter tube insuring greater freedom from static interference and greater response to very wide frequency swings resulting from occasional periods of overmodulation at the transmitter.

The HALLICRAFTERS S-27 Receiver uses a 956 acorn tube as the RF amplifier, assuring reasonably good RF amplification throughout the ultra-high frequency range.

The mixer tube serves the same identical function in both AM and FM receivers, its purpose being to convert the ultra-high frequency signals to the intermediate frequency which in this case is 5.25 megacycles. Any existing operating difference would be in favor of FM as this system allows greater freedom from tube hiss introduced by the mixer when operating at extremely low signal values.

The heterodyne oscillator again performs identical functions in both AM and FM receivers. The slight drift that takes place during the warming up period has the effect of detuning the receiver from the signal, causing severe audio distortion and some reduction of intelligibility.

With FM reception, the bandpass is much wider, allowing more oscillator drift before serious distortion occurs. Even then, the distortion will occur only on the higher percentages of modulation.

Following the mixer stage, the IF amplifier on the S-27 is designed with very high Q iron core coils to allow sufficient station discrimination on the 10 meter communication band but is capable of being broadly expanded for proper reception of frequency modulation signals by a turn of the selectivity switch.

The output of the IF amplifier feeds into both the AM and FM detectors. A sharply tuned IF stage precedes the AM diode detector, however, to provide the necessary selectivity in both the sharp and broad operating positions and to provide a means of compensating for the variations in gain. A noise limiter can be switched in to cut down impulse noise.

On the other hand, the FM detector system includes a limiter which serves as an amplifier when the signal is weak but prevents the amplitude from rising beyond a fixed limit when the signal increases. The net result is to remove amplitude modulation from the signal, reducing noise pulses having no wide-band frequency modulation components. It also compensates for inequalities of the IF transmission characteristic such as those caused by a sharp or double-humped selectivity curve.

The limiter circuit characteristics also aid the receiver in reducing interference on the same channel. For example, if the interfering signal is 6 DB below the desired one, it will not be heard providing of course that the limiter tube is being saturated by the desired signal.

The FM detector differs from the AM detector in that the linearity of its characteristics and consequent freedom from distortion depends upon the proper design and alignment of its resonant circuits, rather than upon a tube characteristic.

Included also in the FM detector circuit is a de-emphasis circuit to reduce the higher audio frequencies in the same proportion in which they are increased at the transmitter. The use of this arrangement allows the transmission of the high audio fidelity without attendant noise amplification.

ManualsPlus.com

The audio amplifier used is the same for both AM and FM receivers except that pains have been taken to reduce distortion and provide nearly flat response throughout the audible range. A push-pull resistance coupled stage with automatic balancing is used to feed into a push-pull output stage using degeneration.

A bass-boost circuit is provided to emphasize low note response when desired as well as high-frequency cut-off circuits for communication use.

INSTALLATION

It is recommended that, upon receipt, the carton and then the receiver be carefully examined for any damage which might have occurred in transit. Should any sign of damage be apparent immediately file claim with the carrier stating the extent of the damage.

INSTALLATION:

After the set has been unpacked and before it is connected to its source of power be sure that all tubes, especially the acorn tubes, are firmly positioned in their sockets. The acorn tubes can be seen after the cover of the RF assembly is removed by unscrewing the knurled nuts which hold it in place. The receiver is designed to operate on 110-125 volts, 50-60 cycle alternating current. On special order, at an additional charge, a universal model S-27 receiver is available equipped with a transformer which will allow operation on voltages ranging from 110 to 250 volts, frequency 40 to 130 cycles. When 25 cycle operation is desired at one specific voltage a suitable transformer is available. Should 25 cycle operation in the voltage range of 110 to 250 volts be necessary, an external step down transformer can be supplied on special order.

The Model S-27 Receiver can be conveniently mounted on the operating table or in a relay rack of standard dimensions. Should relay rack operation be desired, remove the dust cover, or cabinet, and hold the receiver in position by fastening it to the channels of the rack with screws through the suitably provided holes in the panel of the receiver. For this type of operation a special relay rack dust cover is available which slips over the chassis of the receiver after it has been installed in the rack.

Appearing on the rear apron of the chassis of the receiver will be found the 5000 ohm and 500 ohm terminal strips. A permanent magnet 5000 ohm speaker should be connected to the 5000 ohm terminals. The 500 ohm terminals can connect to a speaker or a separate circuit or load of that impedance value.

A socket into which will plug a standard and two prong plug is connected in parallel with the standby switch on the receiver. Use of this socket is suggested should you wish to control the receiver with an external switch or relay.

The octal socket into which is inserted a shorting plug is the "DC Operation" socket. As indicated on the schematic, the shorting plug must remain in the socket for conventional AC operation. When the receiver is to be powered either by external batteries, or a battery vibrapack combination, this plug must be removed. A similar plug which is wired to the DC source as indicated in the schematic is then inserted in the socket and the receiver can be placed in DC service.

The antenna input circuit gives maximum energy transfer when coupled to a transmission line of 75 to 100 ohms, but will operate satisfactorily with line surge impedances up to 400 ohms.

ANTENNA RECOMMENDATIONS

The 27 to 145 megacycle tuning range of the Model S-27 Receiver includes a section of the ultra high frequency portion of the radio spectrum in which wave propagation differs from that experienced on the lower frequencies.

Signals which will be received on the S-27 will travel from the transmitting antenna to the horizon, losing strength as they go in accordance with the inverse square law which means that if a signal has a certain strength at one mile it will have only one quarter that strength at two miles. This law is followed out to the horizon from the transmitting antenna. Unlike lower frequency signals which follow the curved surface of the earth, ultra high frequency signals past the horizon dis-

tance from the transmitting antenna decay rapidly. In addition, the higher the frequency of the signal the faster will be its rate of decay beyond the horizon.

ManualsPlus.com

At this point it will be readily apparent that the higher our transmitting antenna, the greater will be the effective range of the transmitter. Conversely the height of the receiving antenna is equally important in extending the "horizon range" of the particular transmitter to which the receiver is tuned. Another important reason for placing the receiving antenna as high as possible is that the antenna is then removed from the field of objectionable electrical interference near the surface of the earth.

The relationship of horizon distance in feet with antenna height will be approximately 10 miles at 80 feet, 17 miles at 200 feet, 35 miles at 1000 feet and 55 miles at 2000 feet.

So far in our consideration of the propagation of ultra-high frequency waves and the relationship antenna height and type will have on their reception, we have not considered the reflected wave which reaches the antenna after it has been reflected back to earth by the ionized or Heaviside layer of the upper atmosphere. The reception of these waves will readily extend the operating range of the receiver but so many variable factors enter into their reception we will not dwell upon them at this point. Regardless, if the wave which reaches the receiving antenna is of the reflected or ground type, its most efficient reception will depend upon an antenna having the following requisites.

1. Maximum height above ground.

2. Resonant to the signal frequency.

   A half wave dipole antenna cut to the proper length for the reception of the desired signal has proved to be very efficient. A dipole antenna consists of two rods or wires each one fourth of the wave length of the desired frequency in length. A more convenient way of determining the length of each half of the dipole in inches would be to divide 2770 by the frequency in megacycles. For reception at 42 mc the use of the formula will show that the length of each half of dipole will be 65.9 inches or 5 feet 6 inches.

   At this time it might be well to mention that if one antenna is to serve the dual purpose of receiving signals on channels removed from one another by a few megacycles the antenna should be cut for the higher of the two channels or frequencies.

   These rods or wires are arranged so that they will be in the same plane and end to end of each other. They are separated at the center by an air gap of a few inches.

3. Balanced transmission line.

   At this point a balanced transmission line is connected to each quarter wave section, the other end of the transmission line connecting to terminals A_1 and A_2 respectively on the receiver. Twisted pair transmission line with a characteristic impedance of 72 to 100 ohms will effect an efficient transmission of received energy from the antenna to the receiver on Band 1. When twisted pair line is used the better low loss type will be found desirable. On the higher frequency ranges of the receiver a lower loss or concentric type of transmission line will be preferred due to the lower losses which are characteristic of that type of line at those frequencies.

4. Directivity.

   A half wave antenna such as is recommended will be found to be directional broadside to the transmitter location. Positioning the antenna accordingly will give the maximum pickup properties of the antenna.

5. Polarization.

   The receiving antenna should be erected in either a horizontal or vertical plane depending upon the polarization of the transmitted signal. Only when the receiving antenna is properly polarized in respect to the transmitted signal will the greatest electrical field, or lines of force, pass through the antenna and induce the largest voltage in it.

OPERATING INSTRUCTIONS

The receiver is turned "on" by rotating the Selectivity switch from the "AC off" position to the "sharp position".

The functions of the various controls are as follows:

ManualsPlus.com

RF gain

This knob controls the gain of the 1852 and 1853 IF amplifier tubes and will vary the sensitivity of the receiver to meet with varying conditions of reception.

Band switch

This switch determines the frequency band over which the receiver operates.

	S-27	S-27B
Band 1	27.8 - 47 mc	36. - 60 mc
Band 2	46. - 82 mc	56. - 94 mc
Band 3	82. - 143 mc	93. - 165 mc

Selectivity switch

In addition to turning the receiver "on" this control provides reception with either a broad or sharply tuned IF amplifier. The sharp position is recommended for AM reception up to 70 megacycles. The broad position is recommended above this frequency and for standby operation on all frequencies. For FM reception, this switch must be in the broad position.

AF gain

This knob regulates the percentage of detected signal impressed upon the input to the AF amplifier and varies the loudness of the received signal.

AM-FM switch

This switch changes the detector systems coupled to the output of the IF amplifier to correspond with the type of reception desired. When switching to FM reception the deëmphasis circuit (100 microseconds time constant) is automatically inserted. In addition, the S meter is changed from a carrier level indicator for AM reception to a carrier tuning meter for FM reception.

BFO on-off switch

This turns on the beat-oscillator for use in locating a carrier and for the reception of CW signals. The beat oscillator can be properly used only when the receiver is in the AM position as it is coupled only to the AM diode detector.

Pitch Control

This knob changes the pitch of the beat oscillator to the one most suitable for reception by the operator. By its use, two adjacent interfering CW signals can be received with widely different AF frequencies, enabling the desired signal to be easily copied. The AVC switch should be in the "off" position when receiving CW signals.

AVC on-off switch

This switch grounds the input to the AVC system, thus removing the AVC potential from the amplifier tubes. The AVC switch is usually left on for phone reception and off for CW reception.

This switch is inoperative in the FM position where a small amount of delayed AVC action is provided at all times to keep the output of the limiter tube flat over wide ranges of input signal levels.

ANL switch

This switch provides noise limiter action in the AM position. It is inoperative and unnecessary in the FM position. An automatic type of noise limiter is used which adjusts itself to the carrier level. The degree of noise reduction will depend largely upon the type of noise encountered but will be greatest when the noise has a steep wave-front such as that caused by ignition apparatus.

Tone Control switch

This switch is used to regulate the tonal output of the receiver. On the High Fidelity position, the response is nearly linear throughout the audio frequency spectrum. This is the position recom-

mended for relay operation of the receiver and where normal loudspeaker reception is desired. The bass-boost position increases the bass response in the region of 30 to 70 cycles approximately 8 DB and is recommended where the speaker is lacking in bass or where these notes need emphasis. Inasmuch as rumbling noises are emphasized this position should not be used for communication reception where the transmission of intelligence only is required.

ManualsPlus.com

The "Medium" position is suitable for most communication requirements and also where the higher audio frequencies are not desired.

The "Low" position cuts off still more of the higher frequency audio response and is used when the general noise level is too high to provide enjoyable reception throughout the low and high audio frequency spectrum.

Antenna trimmer condenser

This condenser acts as a vernier adjustment of the antenna circuit assuring at all times the maximum transfer of energy from the antenna to the first RF grid due to proper circuit resonance.

In band 1 and the low frequency end of band 2, proper resonance of the antenna circuit coincides with maximum noise level so that this control can then be adjusted when the receiver is not tuned to a signal by simply noting the point at which the noise level is greatest.

In the high-frequency end of Band 2 and in band 3, the position of maximum noise level is not necessarily the position of maximum signal response. These two positions are fairly close together, however. For proper operation, first turn the antenna trimmer to the position of maximum noise. Then tune in a signal and by operating both tuning controls and antenna trimmer, tune for maximum signal response.

The adjustment of the antenna control remains constant over an appreciable portion of the tuning range in each band. Thus it does not require re-adjustment in tuning over the amateur band of 28-30 megacycles or 56-60 megacycles.

S-Meter Adjustment

With the switch in the AM position, remove the cover under the above notation on the front panel. Disconnect the antenna and advance the RF gain control to the right until the switch clicks. The AVC switch should be "on". Adjust the screw-driver shaft until the S-meter reads zero.

Operation AM Reception

For AM reception of phone signals, it is recommended that the RF gain control be advanced to the right until the switch operates, which is the position of greatest sensitivity. The AVC switch should be in the ON position and the IF selectivity in the "sharp position". The AM-FM switch should be in the "AM" position.

Tune in the signal at the frequency desired by operating the large tuning wheel in the center. The S meter will read a maximum when the signal is properly tuned in. The relative strength of the carrier expressed in S units can then be read directly from the meter. If the signal is unsteady or its frequency wobbulates with modulation, then the broad IF position should be used. The broad IF position is recommended for reception above 70 megacycles unless unusually steady signals are encountered.

Adjust the antenna trimmer control as described above.

For CW reception, the AVC switch is changed to the OFF position. The RF gain control is backed off (reduce sensitivity) and the volume control is advanced.

Turn on the beat oscillator with the BFO switch and vary the pitch control till a beat note of a suitable audio frequency is reached. By changing the setting of both the pitch and tuning controls the beat note can be made stronger on one side of resonance than on the other, thus favoring the desired signal in the presence of an interfering signal.

FM Reception

Turn the AM-FM switch to the FM position. The RF gain control should be turned to the point of maximum sensitivity.

The selectivity switch must be in the broad position. Distortion will result if it is left in the sharp position.

ManualsPlus.com

The BFO switch is left in the OFF position.

Tune the receiver to the desired frequency and observe the action of the S meter. The pointer will start from the red zero line and move to a maximum on one side as the FM carrier is approached. Then it will reverse and move to a maximum in the opposite direction. At the instant when the pointer reaches the red zero line in its travel from a maximum in one direction to a maximum in the other direction, the receiver is perfectly tuned in. The antenna trimmer is adjusted for maximum volume or maximum carrier level.

To determine the relative carrier level of an FM signal, switch momentarily to the AM position and observe the S meter reading.

ALIGNING INSTRUCTIONS

This receiver has been carefully aligned at the factory by qualified engineers and alignment should not be attempted unless it is known that the adjustments have been tampered with, or that tubes of a different manufacture have been substituted.

IF Alignment

Connect a signal generator to the grid of the 954 converter tube. Use either a small clip or a piece of flexible wire wound around the grid terminal. Do not attempt to solder to the tube as the heat is certain to crack the glass. Connect a suitable output meter across the speaker terminals.

Controls should be set as follows:

RF gain control at maximum sensitivity.
Band switch in band 2.
Selectivity switch in sharp position.
AM-FM switch in AM position.
Audio gain control in maximum position.
AVC switch in off position.
ANL switch in off position.
BFO switch in off position.

Tune the signal generator to 5.25 megacycles and align transformers T_1, T_2, T_3 and T_4 for maximum response.

A bakelite screw-driver with a metal or insulated tip is necessary for accurate alignment.

This alignment process should be repeated at least once to assure greatest possible selectivity.

To align the "discriminator" transformer (T_5) turn the selectivity switch to the broad position and the AM-FM switch to the AM position.

Leave the signal generator set at the frequency originally used for IF alignment with the modulation left on. Rotate the trimmer control across the discriminator (T_5) secondary (nearest the front of the chassis) until the signal drops to zero. As this point is approached very suddenly, turn the control very slowly. Now slightly detune the signal generator until the output meter gives a readable indication. Adjust the primary trimmer control of the discriminator transformer for maximum response.

Next detune the signal generator to either side of resonance and note the maximum output in each case as indicated on the output meter. These values should be the same for good balance. If they are not, then tune the signal generator to the lower of the two peaks and adjust the primary until the output rises an amount equal to about half the difference of the two outputs previously noted.

Retest for balance as above and readjust the primary till both maximum readings are alike when the signal generator is detuned to either side of resonance.

If a balance cannot be obtained, it is an indication that the discriminator secondary trimmer control has been adjusted off its proper center and will require a very slight readjustment in either direction. The direction of adjustment that will cause the off-tune peaks to assume the same values is the correct one. Care must be taken in adjusting the discriminator secondary control as even a slight misadjustment will result in the distorted reception of frequency-modulated signals.

RF Alignment

ManualsPlus.com

Connect a high frequency signal generator to the antenna terminal (A_1) through a 75 ohm resistor and the ground of the generator to the ground terminal of the receiver. Leave terminal A_2 connected to the ground terminal.

The Ferris Signal Generator Model 18B is recommended for alignment purposes. If this is not available, harmonics of a standard signal generator may be used.

The controls should be set in the same position as for IF alignment.

Set the AM-FM switch in the AM position.
Set the bandswitch on band 1.
Tune the generator and receiver to 42 mc.

Adjust oscillator trimmer C_A until the signal is heard. The frequency of the oscillator is higher than that of the signal. Next adjust trimmer C_B and the antenna trimmer for maximum response.

Tune both receiver and signal generator to 28 megacycles and adjust padder C_C for maximum response while rocking the tuning control. Then repeat the alignment at the high frequency end as described.

BAND 2

Tune the receiver and signal generator to 75 megacycles. Adjust trimmer C_D until the signal is heard. In this band, the frequency of the oscillator is lower than that of the signal. Adjust the antenna trimmer and trimmer C_E for maximum response while rocking the gang condenser. No padder condenser adjustment is provided for the low-frequency end of this band.

BAND 3

Tune the receiver and signal generator to 120 megacycles. Adjust trimmer C_F and the antenna trimmer for maximum response while rocking the gang. It is not recommended that the frequency of the oscillator in this band be adjusted except at the factory. Should it be impractical to return the receiver to the factory for adjustment, then the following instructions are included.

Remove the top cover and locate the high frequency oscillator coil. The white wire winding, one end of which is connected to a terminal on the form is the primary. By carefully shifting the free end of this winding the frequency can be changed over a sufficient range. This lead should be cemented in place with Q-Max or any other low loss cement when adjustment is completed.

Repeat the adjustment of C_F as described above after shifting the frequency of the oscillator.

The frequency of the oscillator is lower than that of the signal. No padder condenser adjustment is provided for the low frequency end of this band.

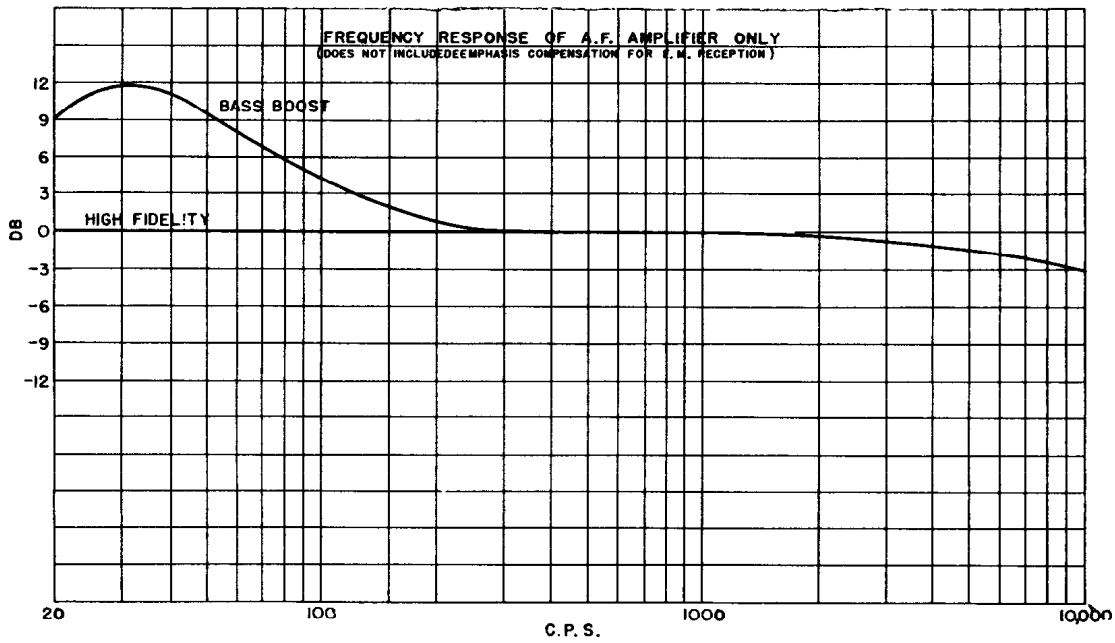

ManualsPlus.com

RESISTOR

NO.	OHMS	WATTAGE
1	250	1/3
2	1,000	1/3
3	1,000	1/3
4	10,000	1-1/2
5	2,000	1/3
6	1,000	1/3
7	100,000	1/3
8	1,000	1/3
9	8	1/3
10	100,000	1/3
11	10,000	R. F. Gain Control
12	35	1/3
13	120	1/3
14	40,000	1/3
15	300	1/3
16	8	1/3
17	100,000	1/3
18	100,000	1/3
19	100,000	1/3
20	200	1/3
21	1,000	1/3
22	300	1/3
23	8	1/3
24	500,000	1/3
25	300	1/3
26	5,000	1/3
27	1,000	1/3
28	7,500	10 Wire Wound
29	2,000	1/3
30	20,000	1-1/2
31	50,000	1/3
32	1,000,000	1/3
33	100,000	1/3
34	250,000	1/3
35	500,000	1/3
36	250,000	1/3
37	15,000	1/3
38	50,000	1/3
39	250,000	1/3
40	100,000	1/3
41	100,000	1/3
42	200,000	1/3
43	000,000	Audio Gain Control
44	250,000	1/3
45	250,000	1/3
46	5,000	1/3
47	5,000	1/3
48	120	1/3
49	250,000	1/3
50	250,000	1/3
51	100,000	1/3
52	250	1-1/2
53	10,000	1/3
54	4,000	1-1/2
55	4,000	1-1/2
56	600,000	1/3
57	35	1/3 Wire Wound
58	1,500	S. Meter Zero Adj. Wire Wound
59	3,200	10
60	25,000	1-1/2
61	50,000	1/3
62	300	1/3
63	5,000	1/3
64	20,000	1/3
65	35	1/3
66	4	1/3
67	1,000	1/2
68	8	1/2
69	8	1/2
70	100,000	1/2
71	35	1/2
72	4	1/2
73	6	1/2

NOTE: Model S-27 - Omit R-72
Model S-27B - Omit R-73

CONDENSERS

NO.	CAPACITY	VOLTAGE	TYPE
1	60 mmf	Per Section	Air
2	15 mmf	Ant. Trimmer	Air
3	5 mmf		Ceramicon
4	.002 mfd		Mica
5	300 mmf		Mica
6	.002 mfd		Mica
7	10. mmf		Ceramicon
8	.002 mfd		Mica
9	300 mmf		Mica
10	300 mmf		Mica
11	.01 mfd	600	Paper
12	.001 mfd		Mica
13	.02 mfd	400	Paper
14	.02 mfd	400	Paper
15	.01 mfd	600	Paper
16	.001 mfd		Mica
17	.02 mfd	400	Paper
18	.02 mfd	400	Paper
19	.01 mfd	600	Paper
20	50 mmf		Mica
21	.02 mfd	400	Paper
22	.02 mfd	400	Paper
23	.01 mfd	600	Paper
24	50 mmf		Mica
25	.05 mfd	400	Paper
26	50 mmf		Mica
27	100 mmf		Mica
28	500 mmf		Mica
29	25 mmf		Mica
30	.002 mfd		Mica
31	50 mmf		Mica
32	500 mmf		Mica
33	.05 mfd	400	Paper
34	30 mfd	25	Electrolytic
35	30 mfd	25	Electrolytic
36	.05 mfd	400	Paper
37	.05 mfd	400	Paper
38	20 mfd		Electrolytic
39	.002 mfd		Mica
40	.05 mfd	400	Paper
41	.05 mfd	400	Paper
42	10. mfd	350	Electrolytic
43	30 mfd	350	Electrolytic
44	10 mfd	400	Electrolytic
45	300 mmf		Mica
46	300 mmf		Mica
47	300 mmf		Mica
48	.01 mfd	600	Paper
49	.01 mfd	600	Paper
50	.01 mfd	600	Paper
51	.01 mfd	600	Paper
52	.002 mfd		Mica
53	100 mmf		Mica
54	200 mmf		Ceramicon
55	300 mmf		Mica
56	50 mmf		Ceramicon
57	.001 mfd		Mica
58	450 mmf		Pad
59	2 mmf		Twisted Pair
60	25 mmf		B.O. Pitch Control Air
61	.002 mfd		Mica
62	.002 mfd		Mica
63	50. mmf		Mica

NOTE: Model 278 - Omit C3

ManualsPlus.com

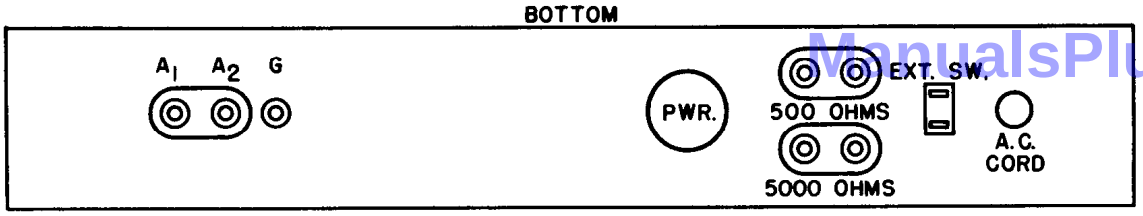

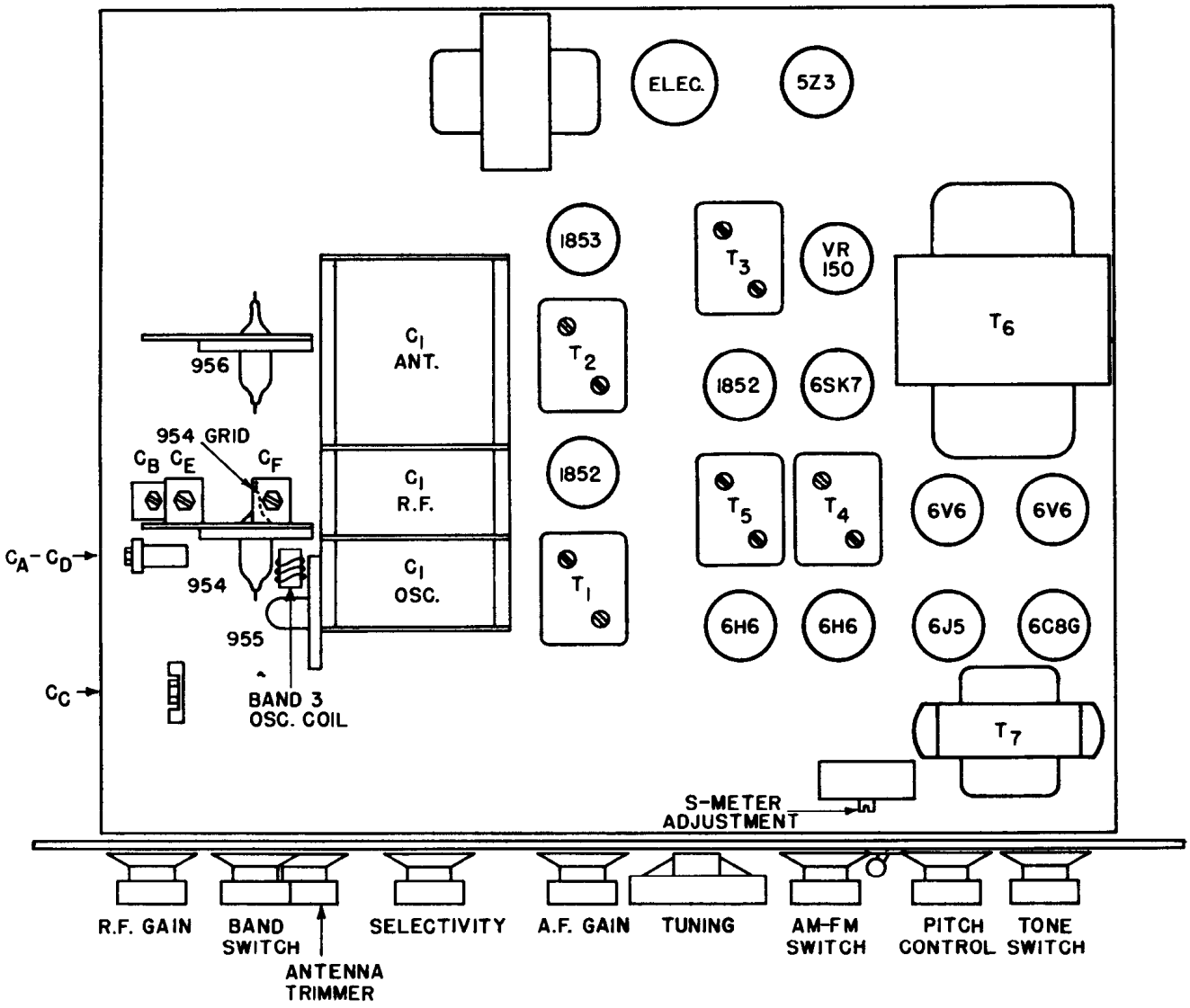

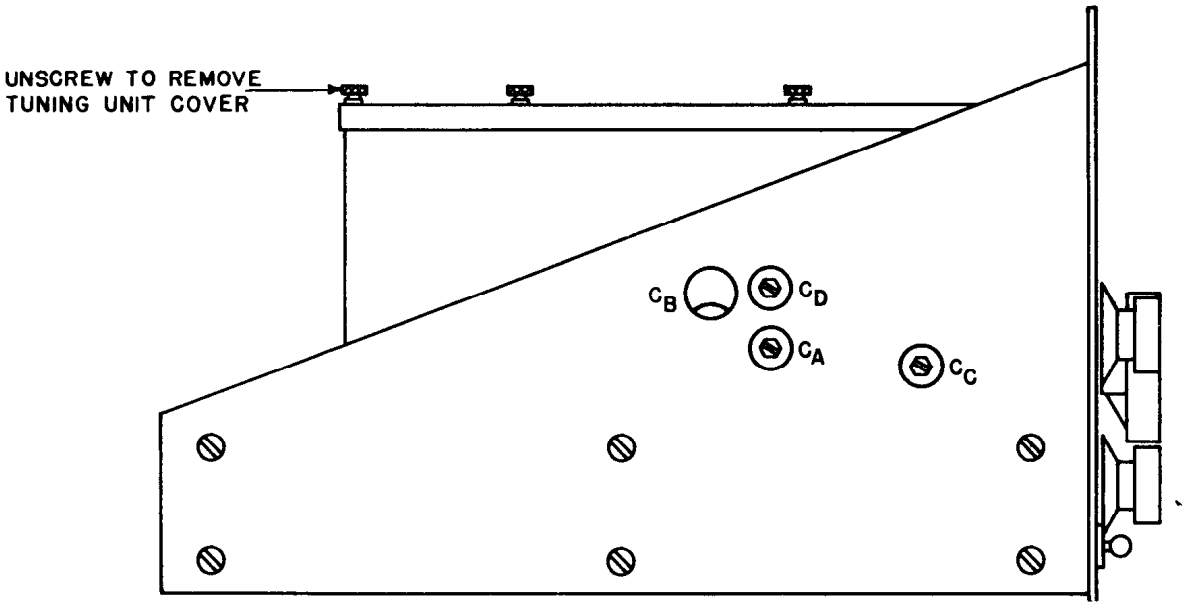

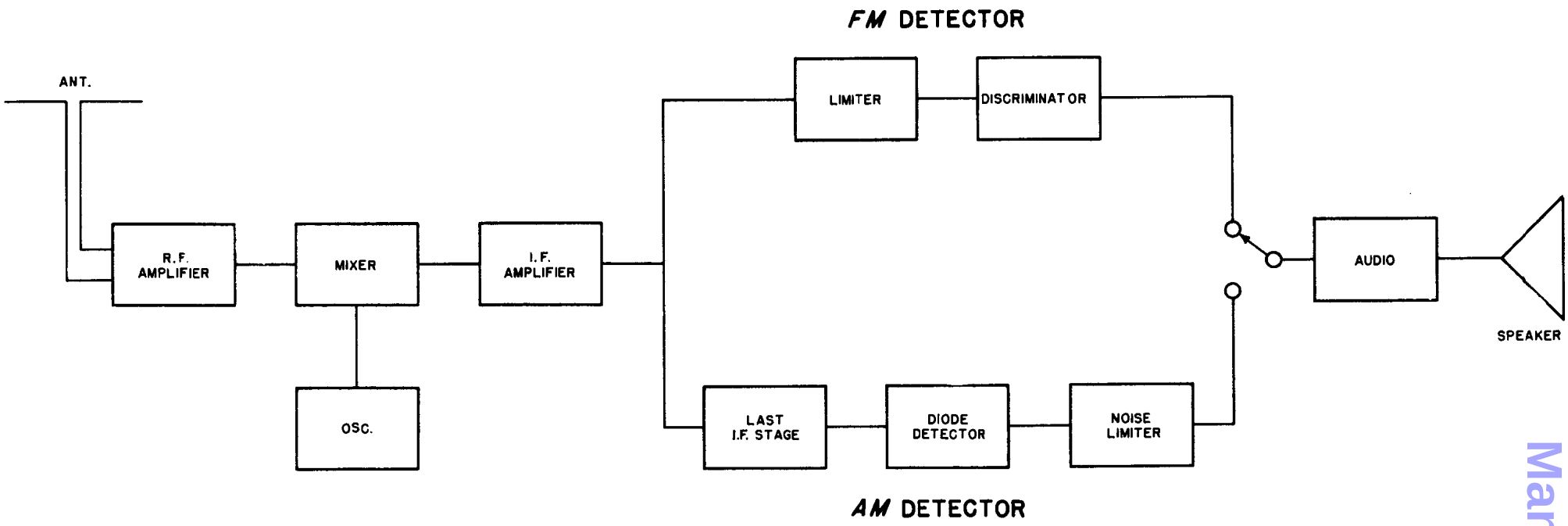

ManualsPlus.com

094-901245B

the hallicrafters *inc*

SCHEMATIC DIAGRAM - ULTRA HIGH FREQUENCY FM-AM RECEIVER - MODEL S-27 - S-27B

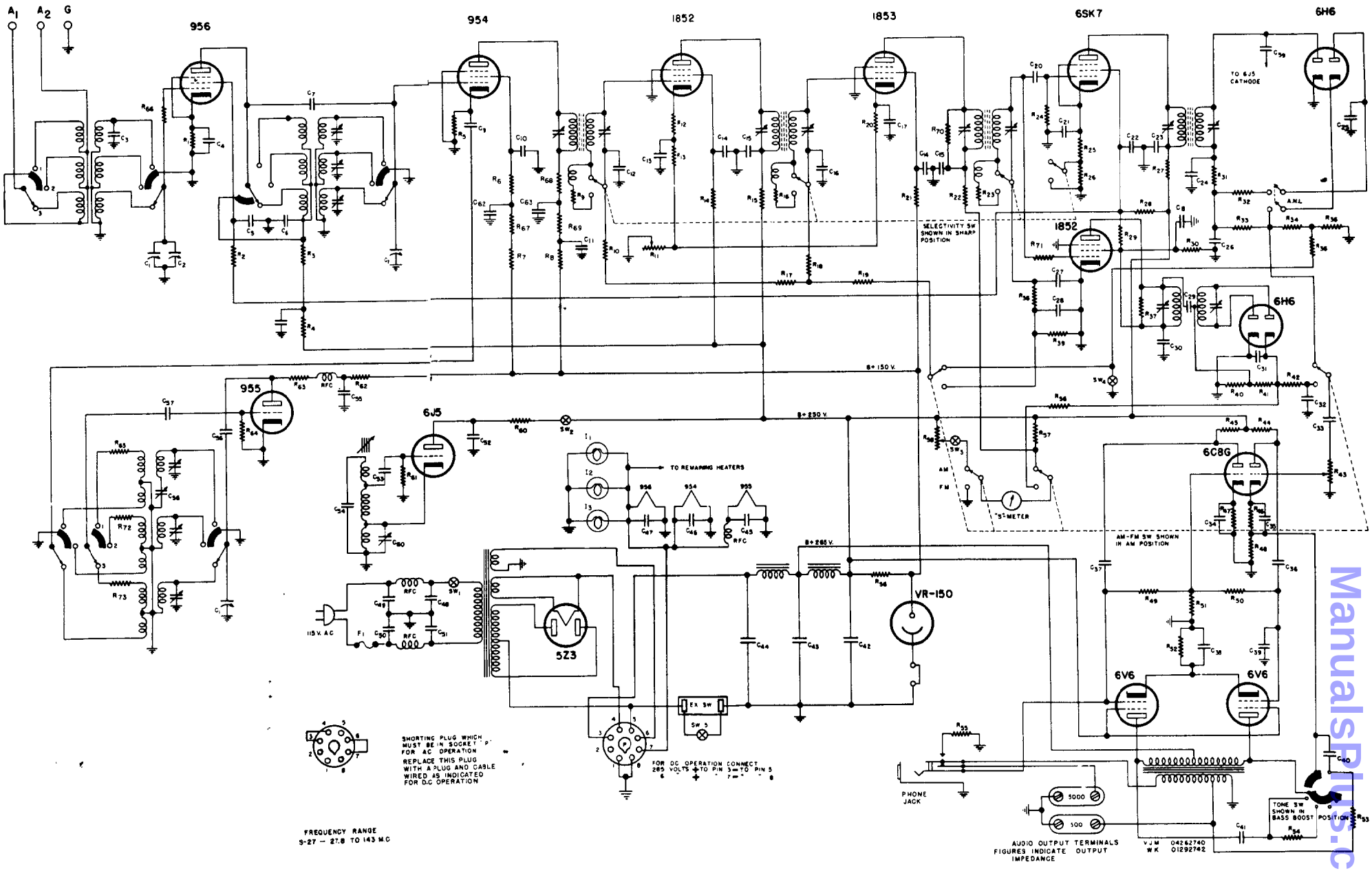

Printed in U.S.A.

ManualsPlus.com