ManualsPlus.com

communications

OPERATING and SERVICE INSTRUCTIONS

SX-110

the hallicrafters co.

MANUFACTURERS OF RADIO, TELEVISION AND ELECTRONIC EQUIPMENT, CHICAGO 24, U. S. A.

ManualsPlus.com

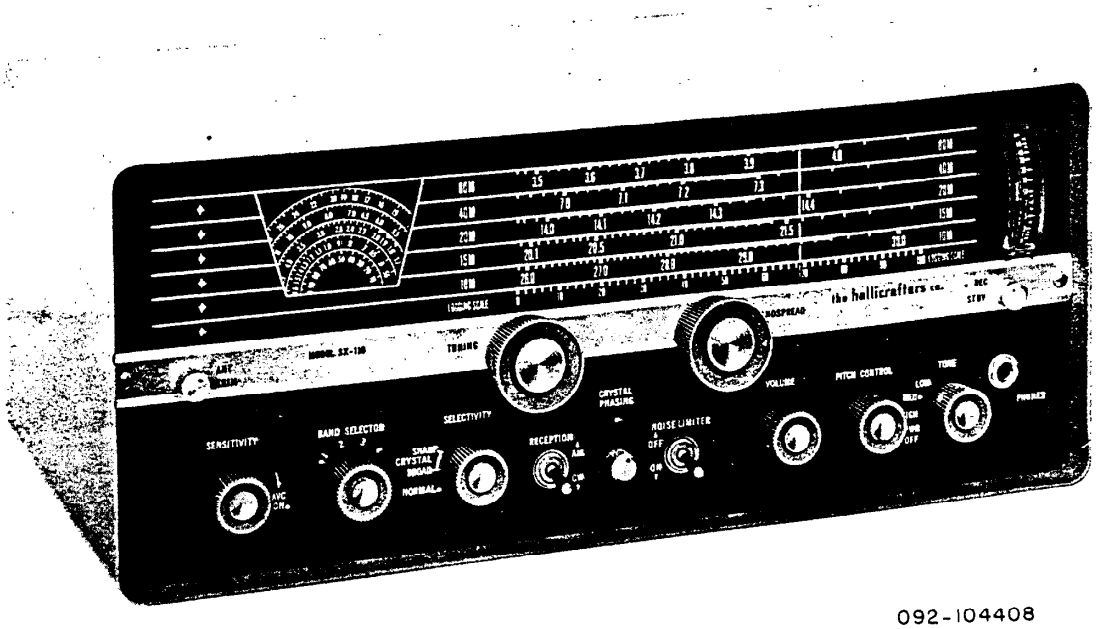

Figure 1. Hallicrafters Model SX-110

SECTION I
GENERAL DESCRIPTION

1-1. INTRODUCTION

Your new Hallicrafters Model SX-110 is a precision built, highly sensitive, communications receiver providing complete coverage in the frequency range of 538 kilocycles to 34 megacycles. Eight tubes, including one rectifier, are employed in the latest superheterodyne circuit and provision is made for the reception of AM or CW signals over the entire tuning range.

For ease and flexibility of operation, two tuning dials are provided. The circular dial provides the general frequency coverage, while the slide rule type dial (the bandspread dial) is specifically calibrated for the 80, 40, 20, 15 and 10 meter bands.

For the ultimate in selectivity, a variable crystal filter system and crystal phasing control can be peak adjusted to receive those "hard to get signals". In addition, an automatic noise limiter circuit can be switched into operation. This combination provides the means of receiving many signals that would be lost in background noise with ordinary receiving equipment.

A new smartly styled "S" meter provides a professional aid for accurate tuning and a means of determining the relative strength of received signals.

Other special features include full range TONE control, SENSITIVITY control with provision for the optional use of AVC, a RECEIVE-STANDBY switch that permits silencing the receiver while maintaining it ready for instant use, without waiting for the tubes to warm up, output connections to match either an external speaker or 500 ohm line, and a headphone (PHONES) jack mounted on the front panel. To permit adjustment for optimum performance with a variety of antenna systems, a special ANTENNA TRIMMER control has been included on the front panel.

IMPORTANT

Your careful attention is especially invited to the "INSTALLATION" and "OPERATION" instructions. They have been provided to insure the satisfaction you have a right to expect from any Hallicrafters "Precision Built" product. Your receiver has an unusually high degree of sensitivity necessary to receive weak and distant stations. Careless operation of a high sensitivity receiver may result in excess noise or background hiss. These undesirable effects can be held to a minimum by careful adjustment of the SENSITIVITY, TUNING, and TONE controls as well as the proper selection and arrangement of the antenna.

ManualsPlus.com

SECTION II
INSTALLATION

2-1. UNPACKING

After unpacking the receiver, examine it closely for damage which may have occurred in transit. Should any sign of damage be apparent, file a claim immediately with the carrier stating the extent of damage. Carefully check all shipping labels and tags for instructions before removing or destroying them.

2-2. LOCATION

The receiver is equipped with rubber mounting feet for table or shelf mounting. When locating the receiver, avoid excessively warm locations such as those near radiators and heating vents. Allow at least one inch of clearance between the back of the receiver and the wall for proper ventilation.

2-3. POWER SOURCE

The SX-110 receiver is designed to operate from a 105-125 volt, 50-60 cycle AC power source. Power consumption is 75 watts.

IMPORTANT

If in doubt about your power source, contact your local power company prior to inserting the power cord into an AC power outlet. Plugging the power cord into the wrong power source may cause extensive damage to the unit, requiring costly repairs.

2-4. ANTENNAS

The RF input of the receiver is designed for operation from either a single-wire antenna, or a half-wave doublet or other tuned antenna with transmission line impedances from 52 to 600 ohms. Antenna connections are made to a three-terminal strip at the rear of the receiver marked "A1", "A2", and "G".

A. SINGLE WIRE ANTENNA

The simplest antenna and one which will provide satisfactory results throughout the entire tuning range is a conventional single-wire antenna. In most localities, good results can be obtained with just the 15-foot length of antenna wire supplied with the receiver. Simply attach one end of this wire to terminal "A1", connect the jumper link between terminals "A2" and "G", and then run the wire about the room in any convenient manner. (See Fig. 2.). If the receiver is operated in a steel constructed building or where receiving conditions are exceptionally poor, an outside antenna should be erected as high as possible and kept free from surrounding objects. In some locations, reception may be improved by connecting a ground wire (ordinary copper wire) from terminal "G" to a cold water pipe or outside ground rod. While the use of an outside ground rod installed in accordance with Insurance Underwriter's Laboratories requirements is adequate protection against lightning, we strongly recommend an additional connection to the nearest cold water pipe to eliminate any shock hazard.

B. HALF-WAVE DOUBLET ANTENNA

For top performance, especially on the shortwave and amateur bands, the use of a half-wave doublet or other type of antenna employing a 52 to 600-ohm transmission line is recommended. A typical doublet antenna installation is shown in Fig. 3. The doublet antenna should be cut to the proper length for the most used frequency or band of frequencies. The overall length in feet of a doublet antenna is determined by the following formula:

$$\text{Length in feet} = \frac{468}{\text{Frequency in megacycles}}$$

When erecting the doublet antenna, it should be remembered that it displays directional properties broadside to its length and should be so oriented with respect to a desired station for maximum signal pick-up.

The doublet antenna may be fed with either a balanced or unbalanced transmission line. When a balanced transmission line such as "twin-lead" or a twisted pair is used, the transmission line connects to terminals "A1" and "A2", and the jumper link between terminals "A2" and "G" is disconnected. When using an unbalanced transmission line such as coaxial cable, the inner conductor connects to terminal "A1", the outer braid connects to terminal "A2", and the jumper

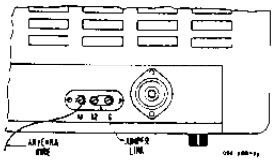

Figure 2. Single Wire Antenna

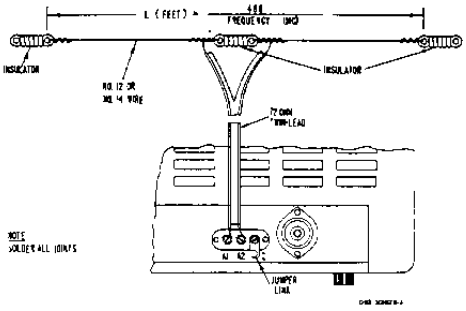

Figure 3. Doublet Antenna Using Twin-Lead Transmission Line

ManualsPlus.com

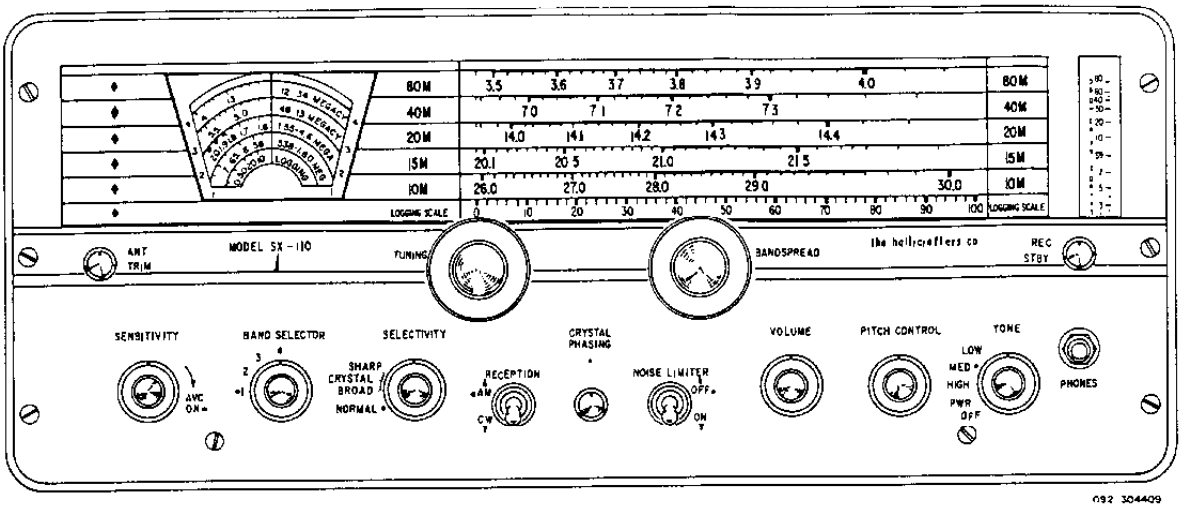

Figure 4. Operating Controls

link connects between terminals "A2" and "G". A ground wire may improve reception when using an unbalanced transmission line.

The doublet antenna provides optimum performance only at the frequency for which it is cut. Therefore, it may be desirable for reception on frequencies remote from the antenna frequency to utilize the antenna as a single wire type. This is accomplished by connecting the two transmission line leads together and connecting them to terminal "A1". The jumper link in this case should be connected between terminals "A2" and "G".

In an installation where the receiver is used in conjunction with a transmitter, it may be advantageous to use the same antenna for receiving as for transmitting. This is especially true when a directive antenna is used since the directive effects and power gain of the transmitting antenna are the same for receiving as for transmitting. Switching of the antenna from the transmitter to the receiver may be accomplished with a donble-pole, double-throw antenna changeover relay or knife switch connected in the antenna leads.

For further information regarding antennas, refer to the "Radio Amateur's Handbook" or the "A. R. R. L. Antenna Book", both published by the American Radio Relay League, West Hartford, Conn., U. S. A.

2-5. SPEAKER CONNECTION

Three screw type terminals, marked "3.2", "500", and "G", are provided on the rear apron of the chassis for connection to an external "3.2" or "500" ohm speaker. It is recommended that the Hallicrafters R-46B or R-47 speaker be employed. Either speaker may be connected to the terminals marked "3.2" and "G".

2-6. HEADPHONES

The headphone jack, marked "PHONES", is located on the front panel of the receiver and is wired so that the speaker is automatically disabled when the headphones are plugged in. The headphone output impedance is not critical and any commercial headphones may be used, including crystal types, as no direct current flows in the headphone circuit. For maximum headphone output, the use of high-impedance magnetic (5000 ohms) or crystal phones is recommended.

SECTION III
OPERATION

3-1. GENERAL

Each control of your receiver performs a definite function which contributes to its outstanding reception capabilities. Full appreciation of the receiver is to be expected only after you have become familiar with each of the controls and the effect each control has on the performance of the receiver.

As a special convenience for those not yet familiar with the full advantages of the various controls, the control settings commonly used for broadcast reception are marked with a dot.

ManualsPlus.com

3-2. SENSITIVITY CONTROL & AVC SWITCH

The SENSITIVITY control is used in combination with the VOLUME control to regulate the level of receiver output. The Automatic Volume Control circuit is turned "ON" when the SENSITIVITY control is set to its maximum clockwise position. The AVC switch has a definite "snap type" action and a click will be heard as the "AVC ON" position is reached.

The setiing of the SENSITIVITY control determines the ability of the receiver to pick up weak or distant stations. This control is normally set to the "AVC ON" position, when receiving AM signals, and at some other position when receiving CW signals. Maximum sensitivity may be used while tuning across the frequency range, but if the station selected has too strong a signal, excessive background hiss or distortion may be present. If this undesirable effect is produced, it can be greatly reduced by turning the SENSITIVITY control in the counterclockwise direction to a slightly lower setiing. If, after reducing the sensitivity, more volume is needed, advance the VOLUME control. When receiving CW signals, a setiing of the sensitivity control that is too high will be evidenced by "thumping" (overloading).

3-3. BAND SELECTOR CONTROL

The BAND SELECTOR control should be set for the band you wish to tune. The four positions of this control correspond to the band numbers at either side of the main tuning dial.

3-4. SELECTIVITY CONTROL

Set this control to the "NORMAL" position. If a greater degree of selectivity is required to overcome noise or separate close signals, turn this control to either of the crystal positions as required. It will then be necessary to adjust the CRYSTAL PHASING control. See "USE OF CRYSTAL PHASING CONTROL" for details (par. 3-6).

3-5. RECEPTION SWITCH

Set this switch at "AM" to listen to voice broadcasts. Set it at "CW" only, if you wish to hear code signals.

3-6. USE OF CRYSTAL PHASING CONTROL

This control permits the discrimination of interfering signals whose frequencies are very near the desired signal. To attain single signal reception, first set the SELECTIVITY control to either BROAD CRYSTAL or SHARP CRYSTAL. Choose a strong signal, perferably a commercial station, because a commercial station is likely to remain on long enough for you to complete the phasing adjustment for single signal reception.

You will find, on tuning across this signal, that it has two amplitudes. Turn the CRYSTAL PHASING control until the weaker of the two amplitudes is reduced to a minimum. Then, tune to the stronger of the two amplitudes and adjust the PITCH control (for CW reception) to a tone most pleasing to you. This adjustment for single signal selectivity will require no further adjustment, unless you change the CRYSTAL PHASING control. See Fig. 5 for an illustration of single signal operation.

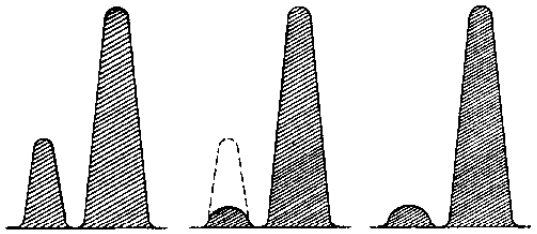

092-104467

Figure 5. Single Signal Operation

3-7. NOISE LIMITER SWITCH

This switch should normally be set at "OFF". If severe electrical disturbances, ignition noise, or other types of pulse-type noise interfere with reception, set the switch at "ON" to place the Automatic Noise Limiter circuit in operation.

3-8. VOLUME CONTROL

This control is used to regulate receiver volume. Clockwise rotation increases volume; counterclockwise rotation decreases volume.

3-9. PITCH CONTROL

This control is used to vary the pitch of code signals, and should be set for the tone most pleasing to the operator. For this control to have any effect, the RECEPTION switch must be set at "CW".

3-10. TONE CONTROL

The TONE control is a combination receiver ON-OFF switch and 3-position TONE control. In the "PWR OFF" position, the receiver is inoperative. To turn the receiver on, simply rotate the control to any of its three remaining positions. For AM reception, set the control for the desired tonal quality. For CW reception, set the control at "LOW".

3-11. ANTENNA TRIMMER CONTROL

The ANTENNA TRIMMER control permits tuning of the antenna to provide the best possible reception. Antenna tuning is desirable, as the electrical characteristics of any antenna system will vary somewhat over the wide range of frequencies that may be tuned by this receiver. When the receiver is placed in operation, this control should be set for maximum signal as indicated on the "S" meter and thereafter, may be used as the final tuning adjustment when changing stations.

3-12. TUNING AND BANDSPREAD CONTROLS

The TUNING and BANDSPREAD controls are used in conjunction with one another to tune in the desired signal. Wide tuning is performed with the TUNING control and fine tuning with the BANDSPREAD control.

A. MAIN TUNING DIAL

The main tuning or left-hand dial is operated by the TUNING control. This dial has four

ManualsPlus.com

calibrated scales, one for each of the four frequency bands covered by the receiver. It also contains a 20 division logging scale for accurately logging and relocating stations of special interest. The main tuning dial should be set for the desired station frequency after the BANDSPREAD control has been set fully clockwise (minimum bandspread tuning capacity).

IMPORTANT

The receiver frequency readings or calibration on the main tuning dial will be correct only if the BANDSPREAD control has been set fully clockwise. If it is set at any other setting, the additional bandspread capacity added to the main tuning capacity will throw off the main tuning dial calibration, because the receiver has been calibrated with the bandspread tuning capacitor set at minimum.

The dial settings for the 80, 40, 20, 15, and 10 meter amateur bands are indicated on the main tuning dial by white dots. When tuning the amateur bands with the bandspread dial, the main tuning dial must be set at the dot corresponding to the desired amateur band. The 160 meter amateur band is indicated on the dial by three short double-weight lines.

B. BANDSPREAD DIAL

The bandspread or right-hand dial is operated by the BANDSPREAD control. This dial contains five scales calibrated for the 80, 40, 20, 15, and 10 meter amateur bands. These five scales are calibrated to read receiver frequency directly when the main tuning dial has been set to the index dot of the desired amateur band. For convenience in tuning, the AM phone bands are indicated on the bandspread dial by double-weight lines.

In addition to its use on the amateur bands, the bandspread dial may also be utilized as a fine tuning adjustment over any portion of the receiver tuning range. Two methods of fine tuning are described below.

(1). The first method of fine tuning is used when it is desired to tune in a single signal with precision accuracy. First the BANDSPREAD control is set a few degrees from its full clockwise position, then the desired signal is located with the TUNING control, and finally the signal is accurately tuned in by "rocking" the BANDSPREAD control (turning it slightly to the left and right) until the signal is loudest and clearest.

(2). The second method of fine tuning is used when it is desired to tune through a group of signals. With the BANDSPREAD control set fully clockwise, adjust the TUNING control to tune in the highest frequency signal in the group. The other signals can then be heard by slowly turning the BANDSPREAD control in a counterclockwise direction.

3-13. STANDBY-RECEIVER SWITCH

This switch, normally set at "REC", permits you to silence the receiver without turning it off. To silence the receiver, set the switch at "STANDBY". In this position, the RF and IF stages are cut off, but the tube heaters remain at operating temperature for instant use. To resume reception at any time, simply return the switch to the "REC" position.

3-14. USE OF THE "S" METER

The "S" meter is normally useful only when the SENSITIVITY control is set to the "AVC ON" position. Sharp accurate tuning can be easily accomplished by carefully observing the meter and tuning for maximum indication. The meter is calibrated in "S" units and DB over S-9. The calibration serves as a method of comparing the relative strength of received signals.

3-15. SERVICE OR OPERATION QUESTIONS

For any further information regarding operation or servicing of your receiver, contact your Hallicrafters dealer. The Hallicrafters Co. maintains an extensive system of authorized service centers where any required service will be performed promptly and efficiently at a nominal charge. All Hallicrafters Authorized Service Centers display the sign shown below. For the location of the one nearest you, consult your dealer or telephone directory.

The Hallicrafters Co. reserves the privilege of making revisions in current production of equipment and assumes no obligation to incorporate these revisions in earlier models.

Authorized hallicrafters Service Center
communications equipment

ManualsPlus.com

SECTION IV
SERVICE DATA

4-1. TECHNICAL SPECIFICATIONS

TUBES ..... Eight including rectifier
HEADPHONE OUTPUT ..... High impedance (See Par. 2-6)
ANTENNA INPUT..... For single wire or 52-600 ohm balanced or unbalanced line.
POWER SOURCE ..... 105-125 volta, 50-60 cycles AC
POWER CONSUMPTION.....75 watts
RECEPTION .....AM and CW
INTERMEDIATE FREQUENCY.....455 KC
AUDIO OUTPUT IMPEDANCE ....Matches 3.2 ohms or 500 ohms
DIMENSIONS.. 18 3/4" wide x 10 1/4" deep x 8" high
WEIGHT, Net .....28 lbs., 4 oz.
WEIGHT, Shipping.....32 lbs.

FREQUENCY COVERAGE

Band	Frequency Range	Calibrated Band Spread
1	.538 - 1.6 MC	-
2	1.55 - 4.6 MC	80M
3	4.6 - 13.0 MC	40M
4	12.0 - 34.0 MC	20, 15, and 10M

4-2. TUBE AND DIAL LAMP REPLACEMENT

To gain access to the tubes and dial lamps, see "CHASSIS REMOVAL". The tube locations, as well as their functions, are shown in Fig. 7.

4-3. CHASSIS REMOVAL

The chassis and front panel assembly are removable from the cabinet as a unit by removing the three screws at each side of the front panel and the five screws on the underside of the cabinet. When removing the chassis from the cabinet, care should be taken not to damage or disturb any of the variable adjustments.

4-4. "S" METER ADJUSTMENTS

A. MECHANICAL ADJUSTMENT

Turn the receiver "OFF". See "CHASSIS REMOVAL" and slide the chassis part way out of the cabinet. Locate the adjustment screw on the side of the "S" meter. Carefully rotate this adjustment until the pointer is in line with the top index mark on the meter scale.

B. ELECTRICAL ADJUSTMENT

Short the antenna terminals to the chassis. Set the RECEIVE/STANDBY at "RECEIVE", RECEPTION switch at "AM", SENSITIVITY switch fully clockwise (AVC ON) position, and the NOISE LIMITER switch at "OFF". Turn the receiver on and turn the "S" meter adjustment, that is located on the rear apron of the chassis (see Fig. 7), until the pointer indicates zero.

4-5. DIAL CORD RESTRINGING

To restring the TUNING or BANDSPREAD dials, first remove the chassis from the cabinet. See "CHASSIS REMOVAL". Remove the front panel from the cabinet by removing the control knobs, the two toggle switch and PHONES jack decorative nuts, the two screws at the bottom of the front panel. Then remove the main tuning dial to gain access to the drive pulleys. For stringing details, refer to Fig. 6. Note that stringing is done with the TUNING and BANDSPREAD gangs fully meshed. After stringing is completed, cut off the excess dial cord and apply a drop of quick drying cement to the knots.

With the TUNING and BANDSPREAD gangs fully meshed, replace the dial so that the index marks at the low frequency end of the dial are in line with the hairline on the dial window.

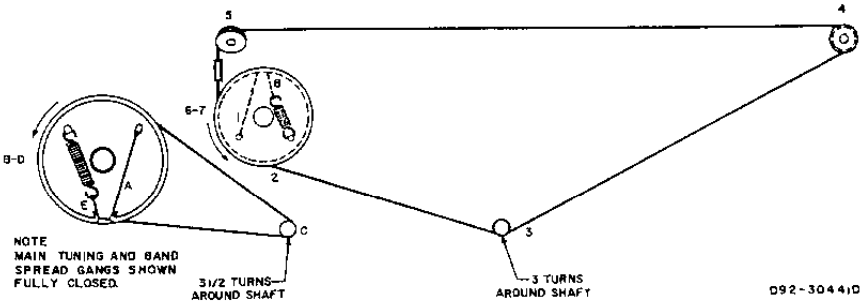

Figure 6. Dial Cord Stringing Diagram

ManualsPlus.com

SECTION V
ALIGNMENT

5-1. GENERAL

This receiver has been carefully aligned at the factory by specially trained personnel using precision equipment. Alignment of the receiver should not be attempted until all other possible causes of faulty operation have been investigated. Alignment should not be required unless the receiver has been tampered with or component parts have been replaced in the RF or IF stages. Alignment should only be made by persons familiar with communications receivers and experienced in their alignment. Refer to Figs. 7 and 8 for location of all alignment adjustments.

5-2. EQUIPMENT REQUIRED

1. Signal generator covering 455 KC to 28 MC.
2. Output meter (or AC scale of VTVM). Connect meter from 500 ohm speaker terminal to ground.
3. Non-metallic alignment tool.
4. Standard RTMA dummy antenna shown in Fig. 9.
5. .02 mfd. capacitor.

5-3. INITIAL CONTROL SETTINGS

SENSITIVITY	Maximum but with AVC off
VOLUME	Maximum
NOISE LIMITER	OFF
STANDBY-RECEIVE	RECEIVE
TONE	HIGH

Other controls to be set as indicated by the alignment chart.

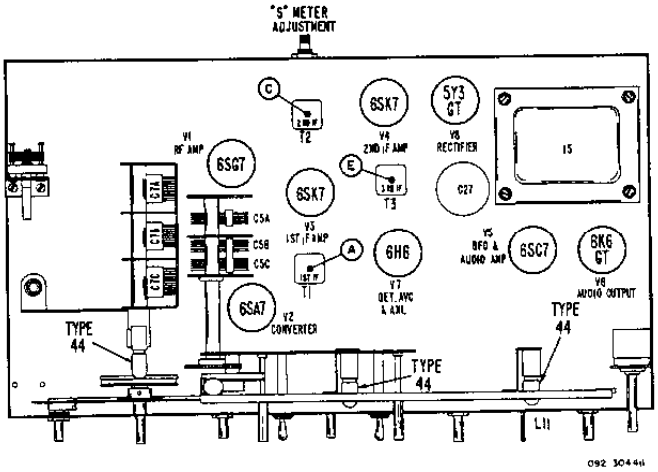

Figure 7. Top View Chassis Tube Locations And Alignment Points

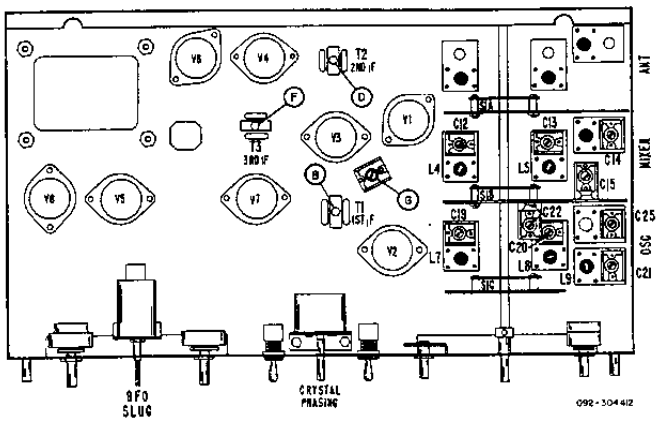

Figure 8. Bottom View Chassis Tube Locations And Alignment Points

ManualsPlus.com

5-4. ALIGNMENT PROCEDURE

- The local oscillator frequency is higher than the signal frequency on bands 1, 2, and 3, and lower than the signal frequency on band 4.
- RF alignment can be made with chassis in cabinet. Holes in bottom of cabinet provide access in all RF adjustments.
- For IF alignment, remove chassis from cabinet.
- Use just enough generator output to maintain a 500 milliwatt reading on the output meter.

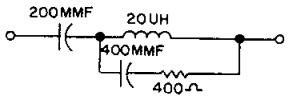

Figure 9. RETMA Dummy Antenna

IF ALIGNMENT

Step	Signal Generator Coupling	Signal Gen. Frequency	Receiver Control Settings	Receiver Dial Settings	Adjust	Remarks
*1	Connect gen. to stator of gang (center section) through a .02 mfd. capacitor.	455 KC No Modulation	BAND SELECTOR at 2. SELECTIVITY switch at BROAD CRYSTAL. RECEPTION switch at CW.	TUNING: 50 on logging scale BANDSPREAD: 30 on outer scale	BFO Slug	**Remove PITCH control knob and set shaft for a zero beat. Do not replace knob.
*2	Same as Step 1	455 KC (approx.) No Modulation	Adjust PITCH for a 400-1000 cycle note. Other controls same as Step 1.	Same as Step 1	A	While turning the slug very slowly in one direction, slowly "rock" the signal generator. As the adjustment passes through the response of the crystal filter, the output goes through a maximum, dips down, and starts going up again. The correct setting of this slug is in the center of the observed dip. A swishing note, in contrast to the sharp crystal tone will be apparent when the correct adjustment has been reached.
3	Same as Step 1	Crystal Frequency	SELECTIVITY switch at SHARP CRYSTAL. Other controls same as Step 1.	Same as Step 1	Signal Generator	Adjust the generator frequency for maximum output. This will be the exact frequency of the crystal. A slight reduction in output will be noted when switching from BROAD to SHARP CRYSTAL.
4	Same as Step 1	Same as Step 3	Same as Step 1	Same as Step 1	BFO Slug	Rotate shaft of PITCH control until a zero beat is obtained. Replace knob with zero in line with the panel index mark.
5	Same as Step 1	Same as Step 3 (Modulated)	SELECTIVITY switch at NORMAL, RECEPTION switch at AM. Other controls same as Step 1.	Same as Step 1	B C D E F G	Maximum output Maximum output Maximum output Maximum output Maximum output Maximum output Repeat above steps for maximum gain.

*NOTE: The crystal filter IF transformer secondary winding (adjustment A) is carefully adjusted at the factory to the frequency of the crystal. A signal generator which may be accurately set to within .25 KC of any frequency between 450 to 460 KC is required to make this adjustment. Since the average service signal generator will not meet this requirement, DO NOT attempt to make this adjustment unless a suitable signal generator is available. Start the IF alignment with Step 3 when a standard type of signal generator is used.

**NOTE: After removing the PITCH control knob (with the knob set at zero) loosen set screw attaching the sleeve shaft to the BFO iron core adjustment screw. The position of the flat on the sleeve shaft must be maintained while adjusting for a zero beat.

RF MIXER, & OSCILLATOR ALIGNMENT

The following adjustments are made with VOLUME, TONE, and SENSITIVITY controls fully clockwise, but with AVC off, NOISE LIMITER switch at OFF, SELECTIVITY switch at NORMAL, and RECEPTION switch at AM. Refer to Fig. 8 for location of all adjustments.

Step	Signal Generator Coupling	Receiver Dial Settings	Band Selector Setting Band	Adjust	Remarks
6	High side thru RTMA dummy antenna (Fig. 9) to antenna terminal "A1"; low side to "A2". Jumper between "A2" and "G".	TUNING: 28.0 MC BANDSPREAD: at extreme right position	4	C19 (osc. trimmer) C12 (mixer trimmer)	Adjust for maximum output
		TUNING: 14.0 MC BANDSPREAD: at extreme right position	4	L7 (osc. slug) L4 (mixer slug)	Same as Step 6
7	Same as Step 6	TUNING: 11.0 MC BANDSPREAD: at extreme right position	3	C20 (osc. trimmer) C13 (mixer trimmer)	Same as Step 6
		TUNING: 5.1 MC BANDSPREAD: at extreme right position	3	L8 (osc. slug) L5 (mixer slug)	Same as Step 6
8	Same as Step 6	TUNING: 4.0 MC BANDSPREAD: at extreme right position	2	C21 (osc. trimmer) C14 (mixer trimmer)	Same as Step 6
		TUNING: 1.8 MC BANDSPREAD: at extreme right position	2	L9 (osc. slug)	Same as Step 6
9	Same as Step 6	TUNING: 1.4 MC BANDSPREAD: at extreme right position	1	C22 (osc. trimmer) C15 (mixer trimmer)	Same as Step 6
		TUNING: .6 MC BANDSPREAD: at extreme right position	1	C25 (osc. padder)	Same as Step 6

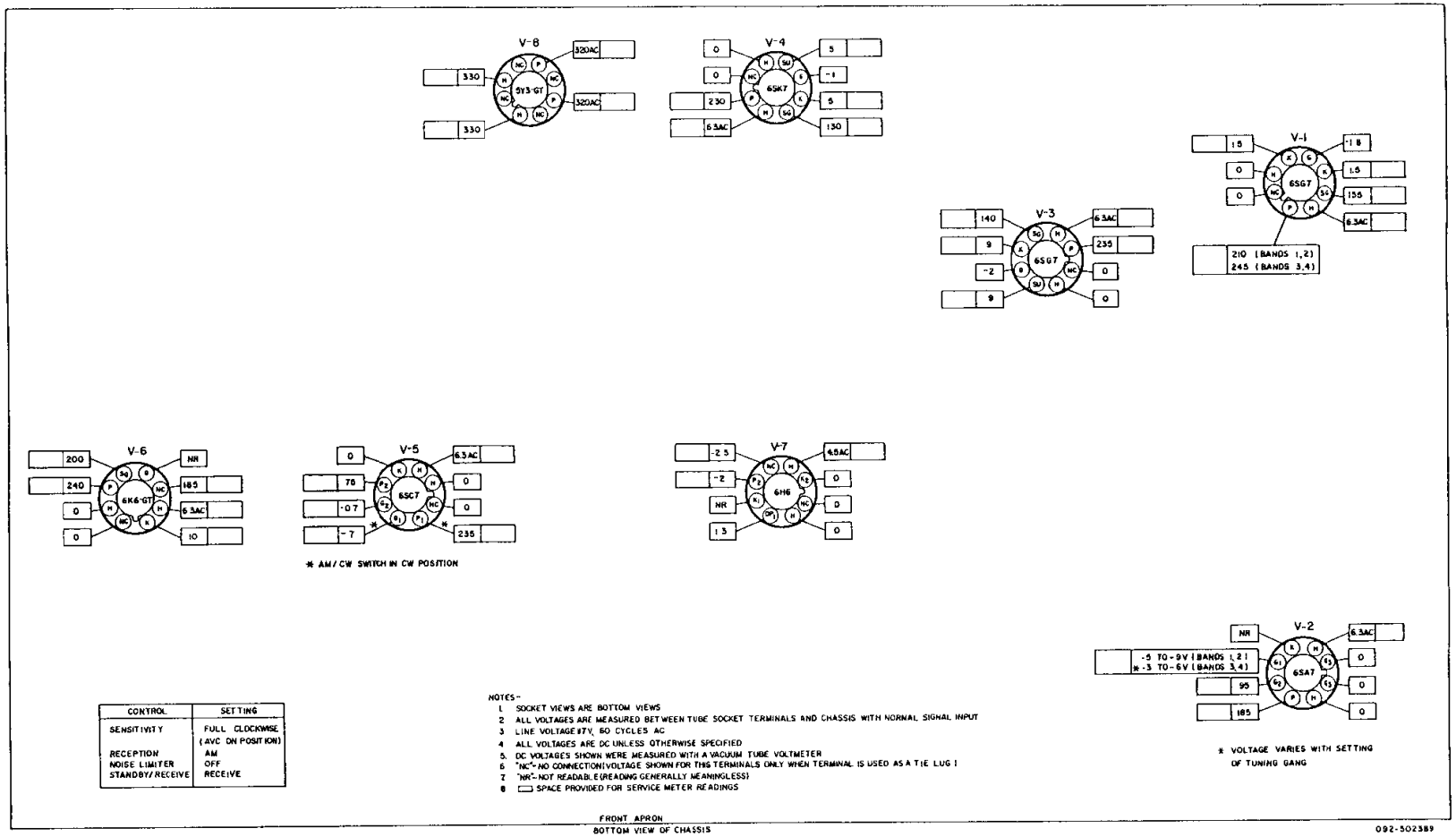

CONTROL	SETTING
SENSITIVITY	FULL CLOCKWISE (AVC ON POSITION)
RECEPTION	AM
NOISE LIMITER	OFF
STANDBY/RECEIVE	RECEIVE

Figure 10. Voltage Chart

ManualsPlus.com

ManualsPlus.com

SERVICE PARTS LIST

Schematic Symbol	Description	Hallicrafters Part Number
	CAPACITORS	
C1	3-25 mmf.; Air Trimmer; Antenna Trimmer Control	048-200451
C5	Variable Capacitor, 3 section; Bandspread Tuning (pulley included)	048-300449
C7	Variable Capacitor, 3 section; Main Tuning (pulley included)	048-100448
C8, 35, 58, 60, 65	.047 mfd., 20%, 200V.; Molded Paper	499-014473
C9, 28	.047 mfd., 20%, 600V.; Molded Paper	499-034473
C11	2.2 mmf.; Neutralizing	047-100160-04
C12	4-80 mmf.; Mica Trimmer	044-100395
C13	3-30 mmf.; Mica Trimmer	044-100396
C14	1.5-15 mmf.; Mica Trimmer	044-200147
C15, 22	2-20 mmf.; Mica Trimmer	044-100191
C16	390 mmf.; 10%, 500V.; Mica	470-213391
C17, 53, 56	.01 mfd., 600V.; Molded Paper	499-034103
C18	150 mmf., 5%, 500V.; Mica	470-222151
C19	4-70 mmf.; Mica Trimmer	044-100149
C20, 21	2-30 mmf.; Mica Trimmer	044-100148
C23	3300 mmf., 5%, 500V.; Mica	470-422332
C24	1500 mmf., 2%, 500V.; Mica	470-421152
C25	320-530 mmf.; Mica Padder	044-100394
C26	2-30 mmf.; Crystal IF Trimmer	044-100047
C27	30-10-10 mfd., 450V.; Electrolytic	045-100062
C29, 33	220 mmf., 10%, 500V.; Mica	470-213221
C30	3-25 mmf.; Crystal Phasing Trimmer	048-200452
C31, 43, 45, 48, 63	.022 mfd., 20%, 600V.; Molded Paper	499-034223
C32, 44, 55	270 mmf., 10%, 500V.; Mica	470-213271
C36	10 mmf., 10%, N750; Ceramic	491-006100-95
C38	2 mmf.; Wire Gimmick	----------
C39	.1 mfd., 20%, 600V.; Molded Paper	499-034104
C41, 42	47 mmf., 20%, 500V.; Mica	470-214470
C47	.0022 mfd., 20%, 1000V.; Molded Paper	499-044222
C52	.02 mfd., +80-20%, 500V.; Ceramic Disc	047-100242
C54	470 mmf., 5%, 500V.; Mica	470-212471
C57	.001 mfd., 10%, 500V.; Mica	470-213102
C61	.22 mfd., 20%, 200V.; Molded Paper	499-014224
C64	10 mfd., 25V.; Electrolytic	045-100121
	***RESISTORS**	
R1, 61, 70	1 megohm, 20%	451-253105
R2, 71	120 ohm	451-252121
R3	10K ohm, variable; SENSITIVITY Control	025-201747
R4, 31	22 ohm, 20%	451-253220
R5	39K ohm, 1 Watt	451-352393
R6, 26	6.8K ohm, 1 Watt	451-352682
R7	22K ohm	451-252223
R8	10K ohm, 2Watt	451-652103
R9	2.2K ohm	451-252222
R10	12K ohm, 4 Watt, W.W.	024-101062
R11	470 ohm	451-252471
R12	2.2 megohm, 20%	451-253225
R13	68 ohm	451-252680
	***RESISTORS (CON'T)**	
R14	47K ohm, 20%	451-253473
R15, 29	100K ohm, 20%	451-253104
R16	560 ohm, 1 Watt	451-352561
R17	500 ohm, variable; "S" meter adjustment	025-300022
R18, 65	1K ohm	451-252102
R19	27K ohm, 1 Watt	451-352273
R20	500K ohm, variable; VOLUME Control	025-201731
R21	150 ohm, 20%	451-253151
R22, 60	270K ohm	451-252274
R23	470K ohm, 20%	451-253474
R24	270 ohm, 1 Watt	451-352271
R25	15K ohm, 20%, 1 Watt	451-353153
R27	47K ohm, 1 Watt	451-352473
R28	22K ohm, 20%	451-253223
R30, 68	10 ohm, 20%	451-253100
R32	1.5K ohm, 10 Watt, W.W.	453-062152
R33	15 megohm, 20%	451-253156
R34	10K ohm, 20%	451-253103
R35	27 ohm	451-252270
R62	560K ohm	451-252564
R63	6.8 ohm, 1 Watt	451-352068
R64	330 ohm	451-252331
R66	15K ohm, 2 Watt	451-652153
R67	330K ohm	451-252334

*All resistors are 10%, 1/2 watt, carbon type unless otherwise specified.

Schematic Symbol	Description	Hallicrafters Part Number
	****COILS AND TRANSFORMERS**	
L1	Coil, Antenna (Band 4)	051-201939
L2	Coil, Antenna (Band 3)	051-201938
L3	Coil, Antenna (Bands 1 and 2)	051-201937
L4	Coil, Mixer (Band 4); Inc. C12	051-201905
L5	Coil, Mixer (Band 3); Inc. C13	051-201906
L6	Coil, Mixer (Bands 1 and 2); Inc. C14	051-201904
L7	Coil, Oscillator (Band 4); Inc. C19	051-201900
L8	Coil, Oscillator (Band 3); Inc. C20	051-201899
L9	Coil, Oscillator (Band 2); Inc. C21	051-201898
L10	Coil, Oscillator (Band 1); Inc. C25	051-201897
L11	Coil, BFO	054-200051
T1	Transformer, 1st Crystal	050-300656
T2	Transformer, 2nd IF	050-300657
T3	Transformer, IF; detector stage	050-300242
T4	Transformer, Audio Output	055-300265
T5	Transformer, Power	052-100209

**Coils L4 thru L10 are supplied complete with trimmer capacitor. Trimmers are also available separately. See "Capacitors".

Schematic Symbol	Description	Hallicrafters Part Number
	SWITCHES	
S1A	Wafer Switch, Antenna	060-200389
S1B	Wafer Switch, Mixer	062-200039
S1C	Wafer Switch, Oscillator	062-200044
S2	Switch, Rotary; STANDBY-RECEIVE	060-202086
S3	Switch, SPST Toggle, NOISE LIMITER	060-100689
S4	Switch, Rotary; PWR OFF-TONE	060-202116
S5	Switch, AVC, Part of R3	----------
S6	Switch, SPST Toggle; BFO	060-100138
S7	Switch, SELECTIVITY	060-202084
	Shaft, Bandswitch And Index Plate	060-200392
	JACKS, PLUGS, AND SOCKETS	
SO1	Jack, PHONE	036-200048
PL1	Line Cord and Plug Assy	087-100078
	JACKS, PLUGS, AND SOCKETS (CON'T)	
	Socket, Dial Lamp Assy.	086-200049
	Socket, Tube; Octal	006-100250
	Socket, Octal	006-200315
	TUBES AND DIAL LAMPS	
V1	6SG7, RF Amplifier	090-901181
V2	6SA7; Converter	090-901180
V3	6SG7; 1st IF Amplifier	090-901181
V4	6SK7; 2nd IF Amplifier	090-901233
V5	6SC7; BFO and Audio Amplifier	090-900874
V6	6K6GT; Audio Output	090-900856
V7	6H6; Detector, ANL and AVC	090-900847
V8	5Y3GT; Rectifier	090-901111
LM1, 2, 3	Lamp, Dial; Type #44	039-100003
	KNOBS	
	Knob, VOLUME and PITCH CONTROL	015-301258
	Knob, ANT. TRIM. XTAL PHASE, and STANDBY-RECEIVE	015-200835
	Knob, SENSITIVITY, BAND SELECTOR, SELECTIVITY, and PWR-OFF/TONE	015-201390
	Knob, MAIN TUNING and BANDSPREAD	015-301339
	MISCELLANEOUS PARTS	
	Cabinet Weld Assy.	066-402480
	Clip, Window Retainer	076-100663
	Connector, Plastic Coupling	029-200564
X1	Crystal (455 KC)	019-100123
	Dial Cord	038-100026
	Dial, MAIN TUNING	083-400703
	Dial Plate Weld Assy.	063-304152
	Dial Window, BANDSPREAD	083-400715
	Foot, Rubber	016-100007
	Front Panel Weld Assy.	068-500898
PL1	Line Cord	087-100078
	Line Cord Lock, Male	076-100397-01
	Line Cord Lock, Female	076-100397-02
	Pointer, BANDSPREAD	082-200426
M1	"S" Meter (W/Bracket)	082-300437
	Shaft, Drive (BAND-SPREAD)	074-202155
	Shaft, Drive (MAIN TUNING)	074-202160
	Shaft, Extension	074-202190
	Spring	075-100012
	Spring, Contact Shoe Tension	075-100013
TS1	Terminal Board, Antenna	088-100032
TS2	Terminal Board, Speaker	088-100578
	Trim Strip	007-400748

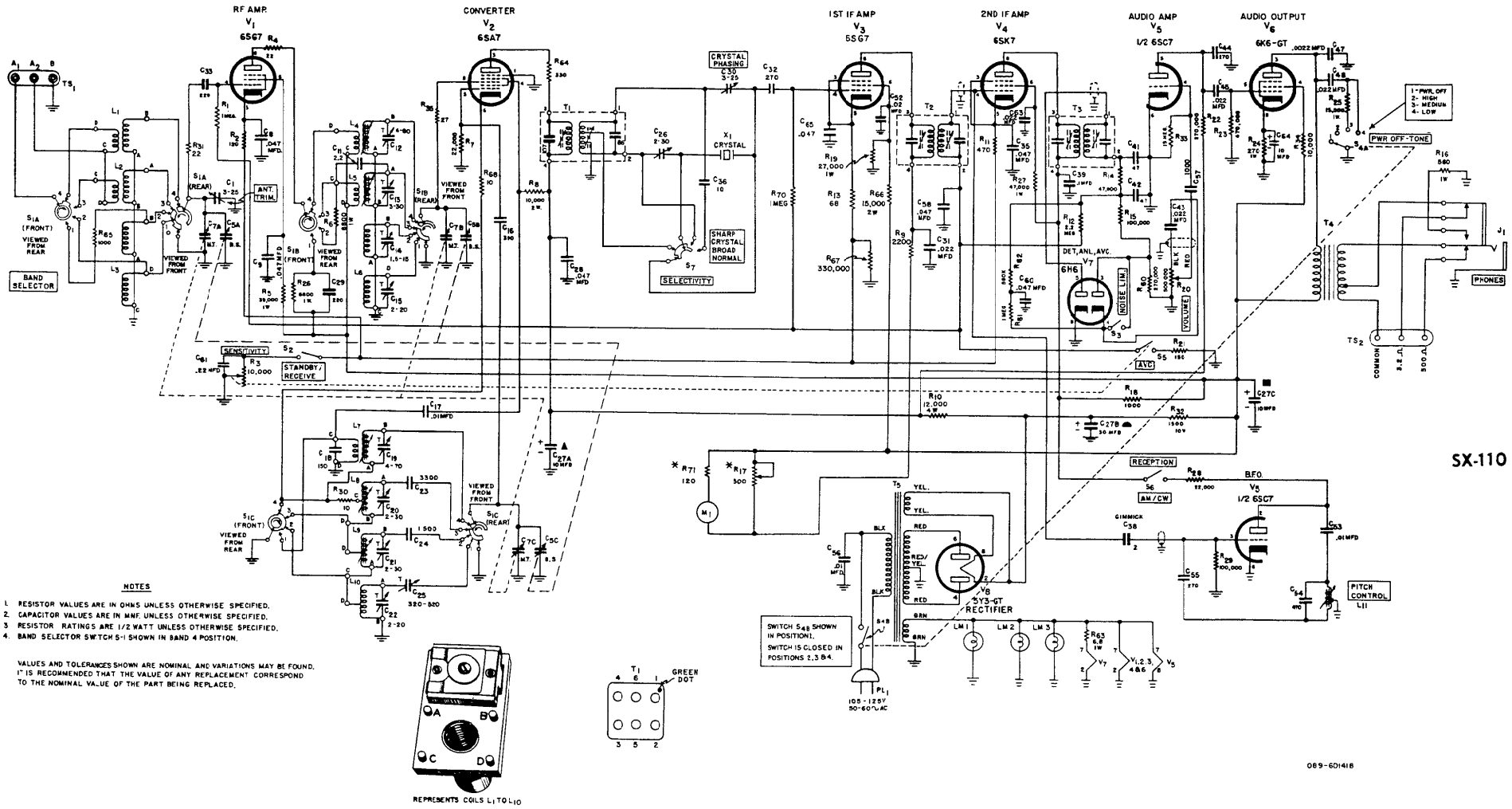

SX-110

ManualsPlus.com