ManualsPlus.com

OUTERCOM "Q-T" SQUELCH
INSTALLATION AND SERVICE
INSTRUCTION MANUAL

FOR UNITS UTILIZING THE ENCODER, PART NO. PL53072-G1
FOR UNITS UTILIZING THE DECODER, PART NO. PL53073-G1

MARKETING & DISTRIBUTION
OUTERCOM ELECTRONICS CORP.
502 CHARLOTTETOWN MALL
CHARLOTTE, NORTH CAROLINA

Telephone 333-8689 Area Code 704
Cable Address "Outercom"

Part No. K41380-1

ManualsPlus.com

OUTERCOM "Q-T" SQUELCH INSTRUCTIONS

The Outercom Q-T Tone Squelch is a "one-way" system of the tone burst type designed to be installed in the Outercom by Hammarlund FM50A/60A series of equipment. The mobile transmitters in this system are coded by means of a burst of tone automatically sent at the beginning of each transmit cycle. This tone burst is generated in the first audio amplifier of the transmitter and employs a resonant reed. The associated Base Station of the system employs a Decoder using a resonant reed relay. Normally the audio section of the receiver is muted and the presence of signals at the operating frequency will not actuate the standard squelch unless an incoming signal with the proper tone burst frequency arrives at the receiver. This burst causes the resonant relay of the Decoder to become energized, in turn activating the audio section of said receiver for a period of time determined by the adjustment of a timing control. This time (in the order of 7 to 13 seconds) is sufficiently long for an incoming mobile unit to identify itself to the dispatcher, yet sufficiently short that if the dispatcher is busy and cannot answer, the receiver will return to the "quiet" condition.

When the dispatcher initiates a call or answers an incoming call the Decoder is overriden or taken out of service by means of a special switch for this purpose which is returned to the "quiet" position after the particular communication is completed. In some systems this switch may be incorporated as part of the push-to-talk switch on the microphone thereby making the operation semi-automatic.

A unique feature of the Outercom Q-T Tone Squelch system is the ability to use one of four pre-determined frequencies thereby making it possible to change tone channels in the field.

Note: The installation of the "Q-T" Tone Squelch equipment will not correct deficiencies in the system. Before attempting installation be sure that all units are operating properly and that satisfactory coverage is achieved.

A. To mount the Encoder Unit Pt. No. PL53072-G1.

(1) Remove the nuts from the two top screws holding the Vertical Nameplate to the front panel.

(2) Fasten the Encoder Unit to the rear of the front panel with the screws supplied with the Encoder Kit. The Encoder Unit contains the mounting nuts. DO NOT USE THE SCREWS ORIGINALLY USED TO HOLD THE NAMEPLATE.

B. To connect the Encoder Unit (Mobile).

(1) Connect the red lead to "D" transmitter B+ (red and black wire) at the junction of L124 and R178 on the terminal board in the transmitter section near V111.

(2) Solder the black lead to ground at lug on V114 socket.

ManualsPlus.com

(3) Remove R175 (1K) from receiver and discard. Wire a new 1K, 1/2 watt resistor supplied with Encoder from V114A pin 8 to spare terminal on strip near microphone connector (or other convenient tie point). Connect the Orange Encoder lead to this point.

(4) Remove C189, 1000 mmf (or 2-470 mmfs) from transmitter and replace with 2700 mmf supplied with Encoder Kit.

C. To Mount the Decoder Unit Pt. No. PL53073-G1.

(1) Remove the nuts from the two top screws holding the Vertical Nameplate to the front panel.

(2) Fasten the Decoder Unit to the rear of the front panel with the screws supplied with the Decoder Kit. The Decoder Unit contains the mounting nuts. DO NOT USE THE SCREWS ORIGINALLY USED TO HOLD THE NAMEPLATE.

D. To connect the Decoder Unit. (Base Station)

(1) Solder the Yellow lead to V107 Pin 7.

(2) Solder the White lead to J101 Pin 12.

(3) Solder the Brown lead to J101 Pin 7.

(4) Solder the Black lead to the ground on V109 socket.

(5) Solder the Red lead to C179-C (the junction of L122, C179-C and the center arm of K101).

(6) Solder the Green lead to V108 Pin 6.

(7) Remove the Yellow lead from J104 Pin 4 and tie back. Solder the Gray lead from the Decoder to J104 Pin 4. Solder a Gray Lead from J104 Pin 4 to one terminal of a SPST switch. Solder a Black lead from the other terminal of the switch to ground. This switch is for Tone Squelch Override. The switch may be mounted on the Vertical Nameplate panel through the Hammarlund trade mark. A nameplate is supplied with the kit to designate the normal and alternate condition of the Decoder. If the switch is mounted on the microphone, connect one side of the switch to pin 4 of the microphone connector J104 and the other side to ground.

E. Adjustment.

There are only two adjustments to be made to the system. Before describing these a short review of the operation is in order.

When a mobile unit is keyed, a short tone burst is transmitted (about 1/4 second). This tone frequency is determined by a resonant device similar to a tun-

ManualsPlus.com

ing fork which is in the Encoder. When the proper frequency tone is received, a similar device in the Decoder responds and causes the speaker to come alive for a short period. After the first call, the Base Station operator overrides the Decoder and the system operates normally. At the end of the conversation the operator returns the unit to Q-T operation.

(1) "Keep Alive" Adjustment. Override the Decoder by placing switch in the "alternate" (up) position. Advance squelch control until hiss is heard. Switch to "normal" (down). Decoder will quiet the receiver after a short time. This period may be adjusted by the "keep Alive" control on the Decoder from about 7 to 13 seconds.

(2) Gain. The gain control should be set for maximum (CW). If the set is turned on by noise or uncoded signals, reduce the gain a little at a time until the falsing stops.

F. Frequency Change.

(1) To change the operating frequency of the Decoder.

a) Remove the nuts holding the cover of the Decoder.
b) Remove the cover.
c) The four frequencies that are available for use are; 317.5 cps, 345 cps, 375 cps, and 404 cps. The Decoder is factory set for 317.5 cps operation.
d) To change, remove the Gray lead from the 317.5 cps contact and connect to the desired one. The frequency of the longest reed is 317.5 cps and the frequency of the shortest reed is 404 cps.
e) Replace cover and nuts.

(2) To change the operating frequency of the Encoder.

a) Remove the nuts holding the cover of the Encoder.
b) Remove the cover.
c) The four frequencies that are available for use are; 317.5 cps, 345 cps, 375 cps and 404 cps. The Encoder is factory set for 317.5 cps operation. To change frequency remove reed assembly from the box by removing two screws. Remove the sleeving from the desired frequency reed and place the sleeving on the undesired one. The frequency of the longest reed is 317.5 cps and the frequency of the shortest reed is 404 cps. IMPORTANT: Extreme care must be exercised when placing the sleeving on the reed. If the reed is bent the frequency will change and the reed will be permanently damaged.
d) Replace cover and nuts.

ManualsPlus.com

SERVICE & MAINTENANCE NOTES

The simplicity of the QT circuits and the accessability of the components facilitates maintenance of the units. If the system does not function properly, the following will serve as a guide to localize the trouble:

A. Encoder.

1. When the transmitter is keyed and the reeds do not vibrate, check;

   a) Keyed B+ present at .1 mfd capacitor (C1)
   b) Continuity of reed coil (K1)
   c) Capacitor C1 (.1 mfd) (replace with known good capacitor).

2. When transmitter is keyed tone burst relay (K2) does not pull in, check;

   a) Keyed B+ present at 8 mfd capacitor (C2)
   b) Continuity of tone burst relay coil
   c) Capacitor C2 (8 mfd) (replace with known good capacitor), must be good at low temperatures, -30°C.

3. Reed vibrates, tone burst relay K2 pulls in, tone is not heard in the receiver or is weak,;

   a) Check deviation of the transmitter. When voice modulated 5 Kc, the tone deviation m ust be at least 2 Kc.
   b) Check C189, FM50-A/60A must be .0027 uuf.
   c) Check resistance of reed coil winding which should be 2000 ohms.

B. Decoder.

1. Tone is heard in the loudspeaker (with the squelch open) but reeds do not vibrate.

   a) Check to see if sensitivity pot (R5) is at maximum CW position. This control may have to be turned counter-clockwise if false tripping is present.
   b) 12AU7 tube (V1)
   c) Check continuity of reed relay coil (K2) 3500 ohms.
   d) Check capacitor C2 (.047 mfd) (replace with known good capacitor)

2. Reed vibrates, but relay K1 does not drop out, check;

   a) To see if 12AU7 is gassy.
   b) To see if lead is connected to operating reed tap. (Coordinated with encoder tone frequency).
   c) The voltage on cathode (Pin 8) should be approximately 55V DC on standby.

ManualsPlus.com

Service & Maintenance Notes (Cont'd)

3. Relay K1 does not pull in. (In absence of tone, standby condition). Check;

   a) B+ should be approximately 225V. DC
   b) Plate voltage (Pin 6) should be approximately 170V. DC when tube is conducting and the plate current should be approximately 12 ma. The cathode voltage (Pin 8) is approximately 56V. DC, and the grid voltage (Pin 7) is approximately 17V. DC.
   c) Capacitor C1 (.22 mfd) (replace with known good capacitor).

4. If one mobile encoder tone burst does not open the decoder and the tone appears normal in amplitude, the reed may be defective. Substitute a known good reed.

VOLTAGE CHART

All voltages Measured with a V.T.V.M. ±20%

Pin	Voltage
1	55
2	0
3	2
4	Filament
5	0
6	175 on Standby/220 Over-ride
7	17 on Standby/ 0 Over-ride
8	55 on Standby/ 14 Over-ride
9	Filament

ManualsPlus.com

PARTS LIST - DECODER

Schematic Designation	Description	Hammarlund Part No.
C1	Capacitor, Fixed Mylar .22 MFD ±10% 125V.	K23927-3
C2, 3	Capacitor, Fixed Mylar .047 MFD ±10% 125V.	K23927-2
C4	Capacitor, Fixed Electrolytic 6.4 MFD 25V.	K23932-1
C5	Capacitor, Fixed Disc Ceramic .02 MFD +80 -20% 500V.	M23034-27
K1	Relay (1 Form C)	K40408-2
K2	Relay, Decoder Reed	M40409-1
R1	Resistor, Fixed 22 Meg. ±10%, 1/2 w.	K19309-313
R2	Resistor, Variable 10 Meg. 1/4 w.	K15379-5
R3	Resistor, Fixed 120K ±10%, 1/2 w.	K19309-99
R5	Resistor, Variable 500K, 1/4 w.	K15380-7
R6	Resistor, Fixed 1K ±10%, 1/2 w.	K19309-49
R7	Resistor, Fixed 4.7K ±10%, 1/2 w.	K19309-65
R8	Resistor, Fixed 6.8 Meg. ±10%, 1/2 w.	K19309-141
R9	Resistor, Fixed 100K ±10%, 1/2 w.	K19309-97
R10	Resistor, Fixed 10 Meg. ±10%, 1/2 w.	K19309-145
V1	Tube, Electron 12AU7	K16295-1

PARTS LIST - ENCODER

Schematic Designation	Description	Hammarlund Part No.
C1	Capacitor, Fixed Mylar .1 MFD ±10% 400V.	K23927-4
C2	Capacitor, Fixed Electrolytic 8 MFD 300V.	K23932-2
K1	Relay, Oscillator Reed	M40409-2
K2	Relay, (1 Form C)	K40408-2

ADDITIONAL PARTS FOR MODIFICATION OF FM50A/60A

Capacitor, Disc Ceramic .0027 MFD ±10%, 1000V.	M23034-33
Resistor, Fixed 1K ±10%, 1/2 w.	K19309-49

ManualsPlus.com

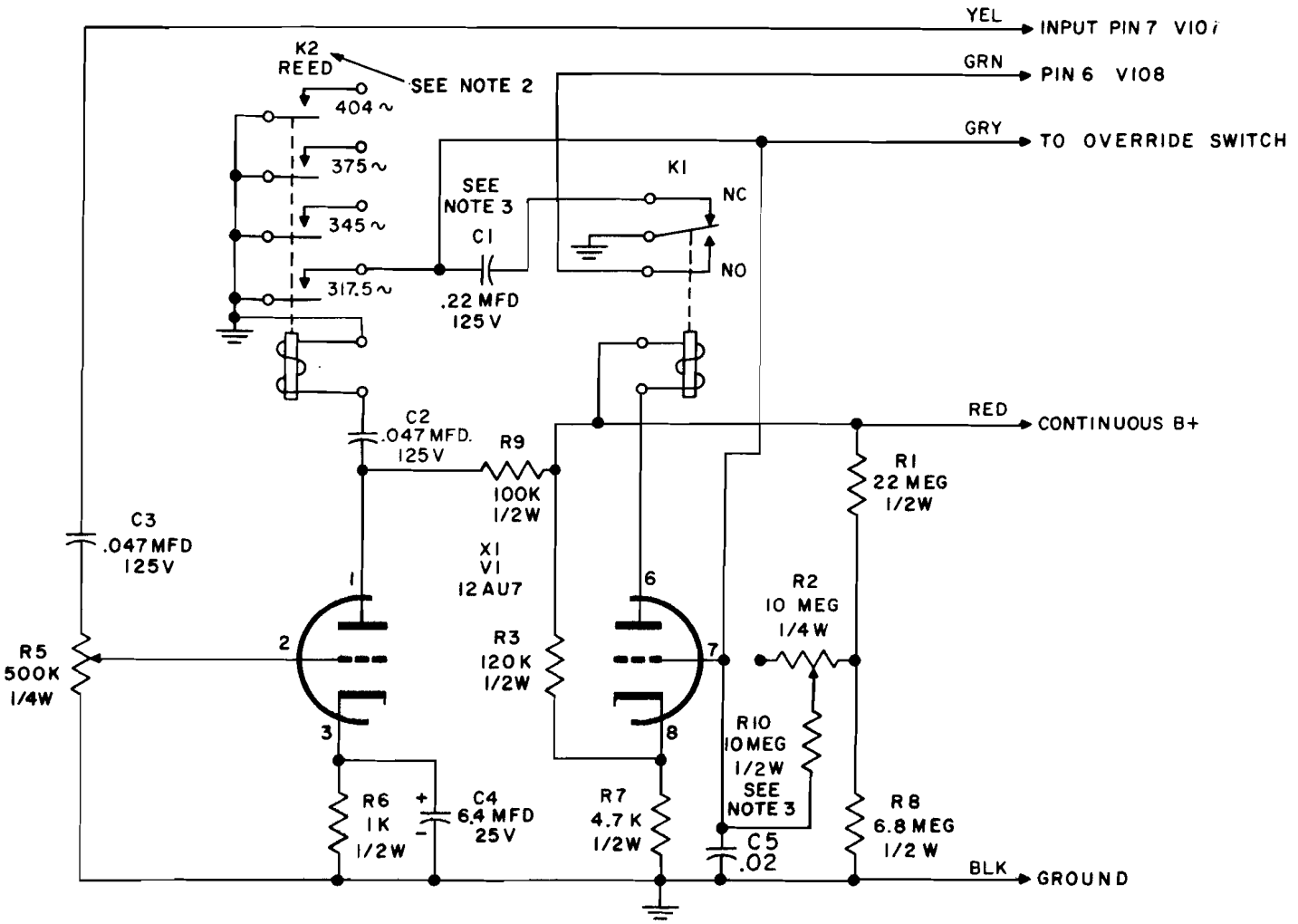

NOTE:
1: ALL RESISTORS ARE ± 10% UNLESS OTHERWISE NOTED
2: FACTORY SET FOR 317.5~MOVE TAP WHEN CHANGING TONE SQUELCH FREQUENCY
3: TIME DELAY FACTORY SET FOR 7 TO 13 SEC. TO CHANGE TO 3 TO 7 SEC. REMOVE R10, 10 MEG. TO CHANGE TO 15 TO 25 SEC. CHANGE C1 TO .47 MFD.

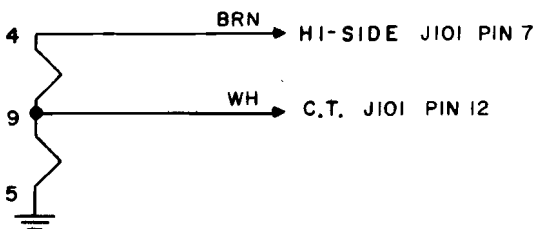

SCHEMATIC DIAGRAM
Q-T BASE TONE DECODER

No. 53088 | P

ManualsPlus.com

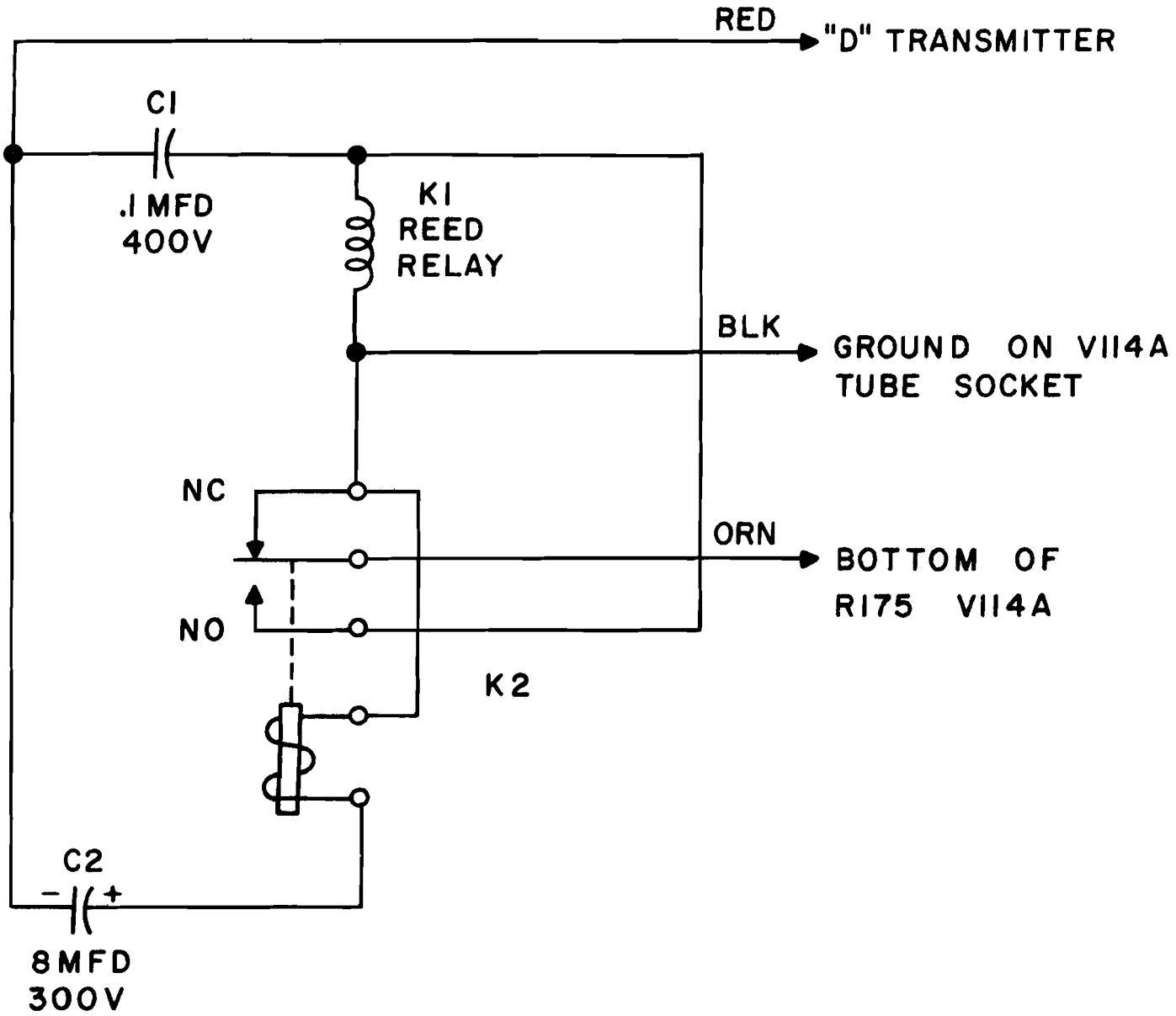

SCHEMATIC DIAGRAM
Q-T MOBILE TONE ENCODER

No. 53099 | M

ManualsPlus.com

BASIC Q-T SYSTEM INTERCONNECTIONS

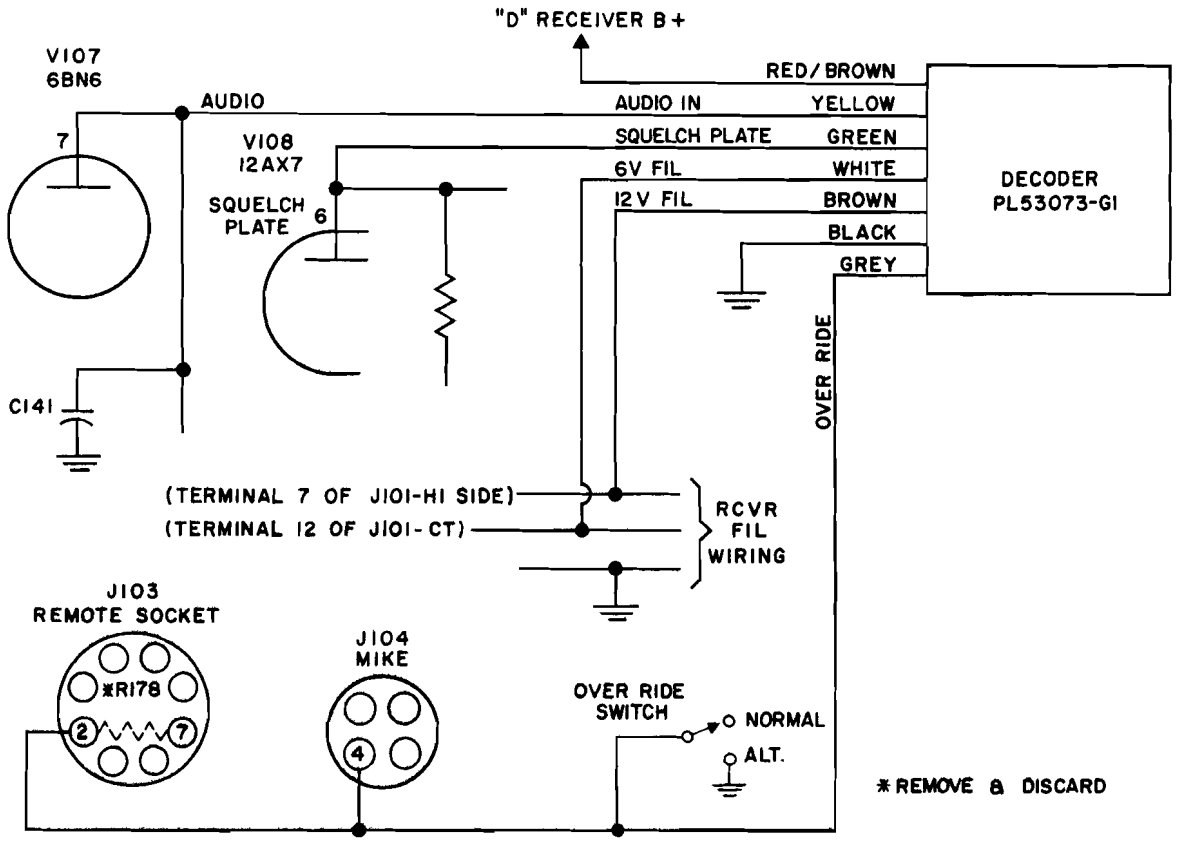

MOBILE UNIT

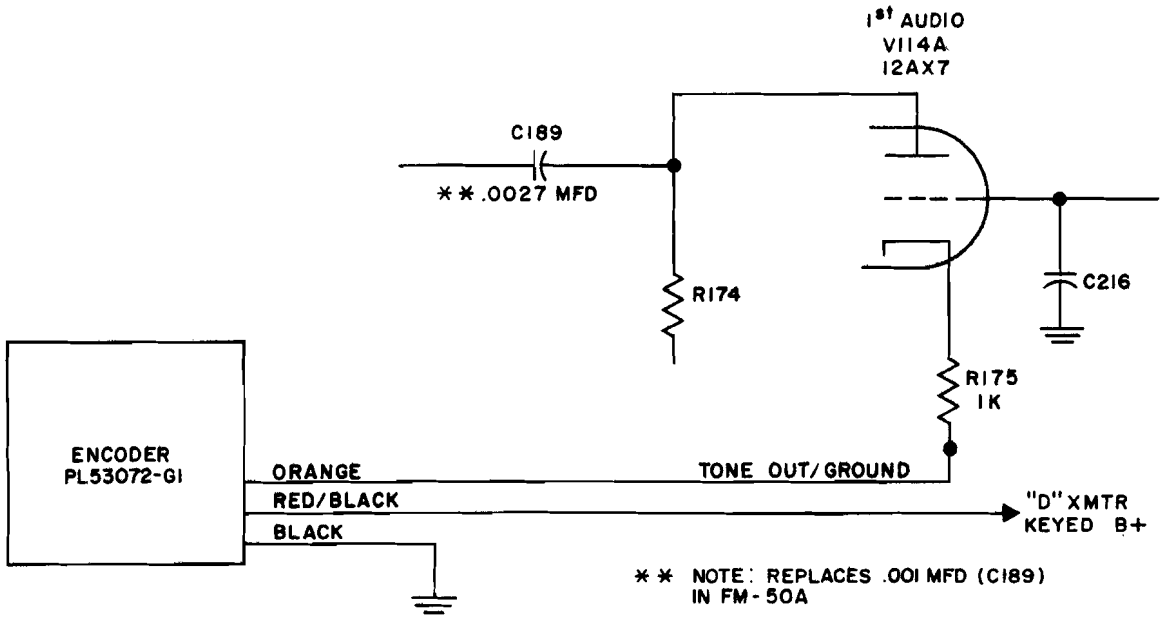

ManualsPlus.com

ADDENDA SHEET

FOR

OUTERCOM "Q-T" SQUELCH

INSTALLATION AND SERVICE

INSTRUCTION MANUAL

The Following revisions and additions should be made to the basic manual attached:

Page 2, Par. D., Item (7). Delete first sentence which reads as follows: "Remove the yellow lead from J104 Pin 4 and tie back."

Add in it's place: "Remove R178 on J103 remote socket". The above is indicated correctly on Schematic No. 53193 Basic Q-T System Interconnections Diagram in rear of manual.

ManualsPlus.com

ADDENDA SHEET

FOR

OUTERCOM "Q-T" SQUELCH

INSTALLATION AND SERVICE

INSTRUCTION MANUAL

The following revision should be made to the basic manual:

Page 3, Par. F. (1) d). First sentence:

To change, remove the gray lead and the .22 mfd capacitor from the 317.5 cps contact and connect to the desired one.