ManualsPlus.com

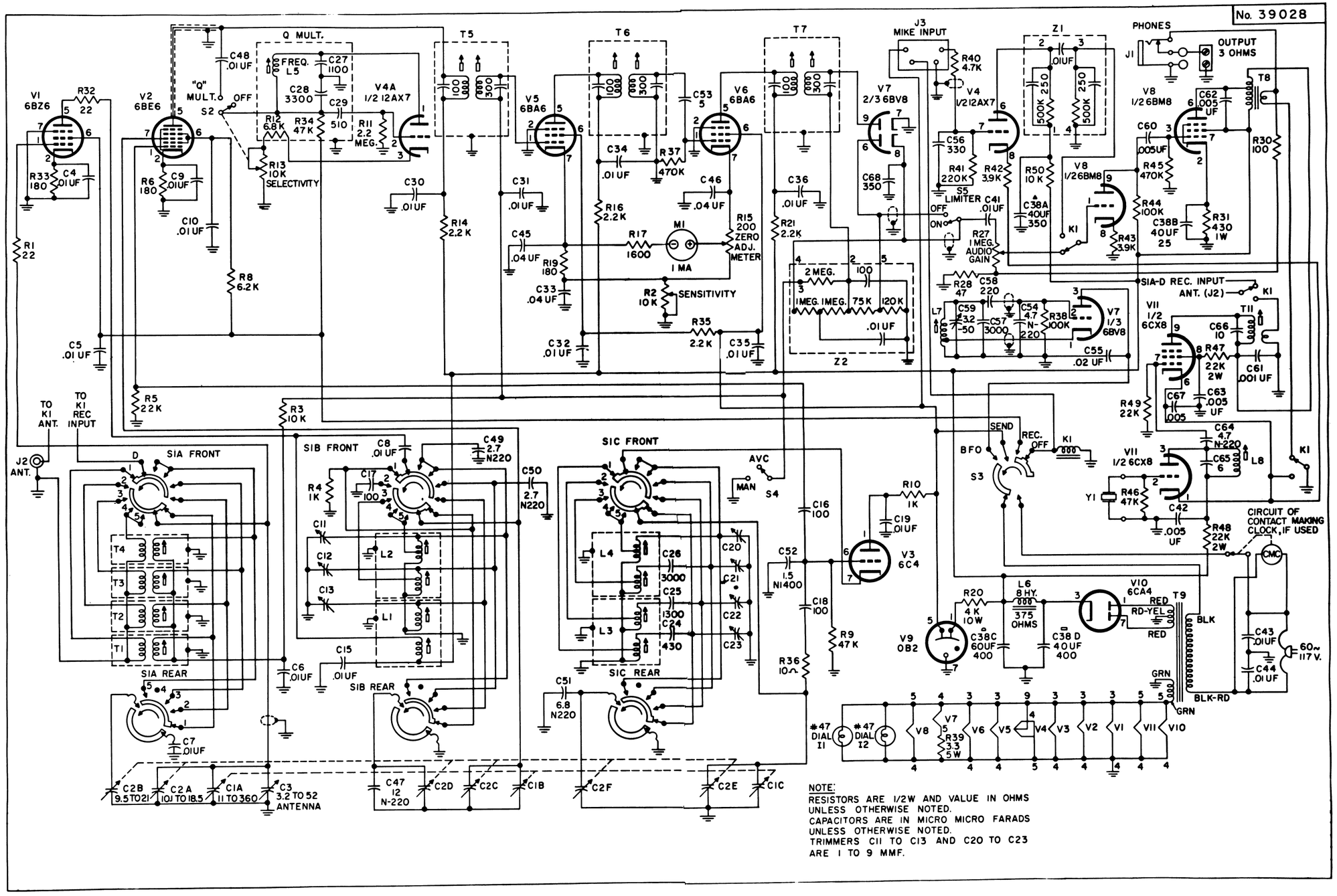

Figure 10. Hammurland HQ-105TR Transceiver Schematic Diagram