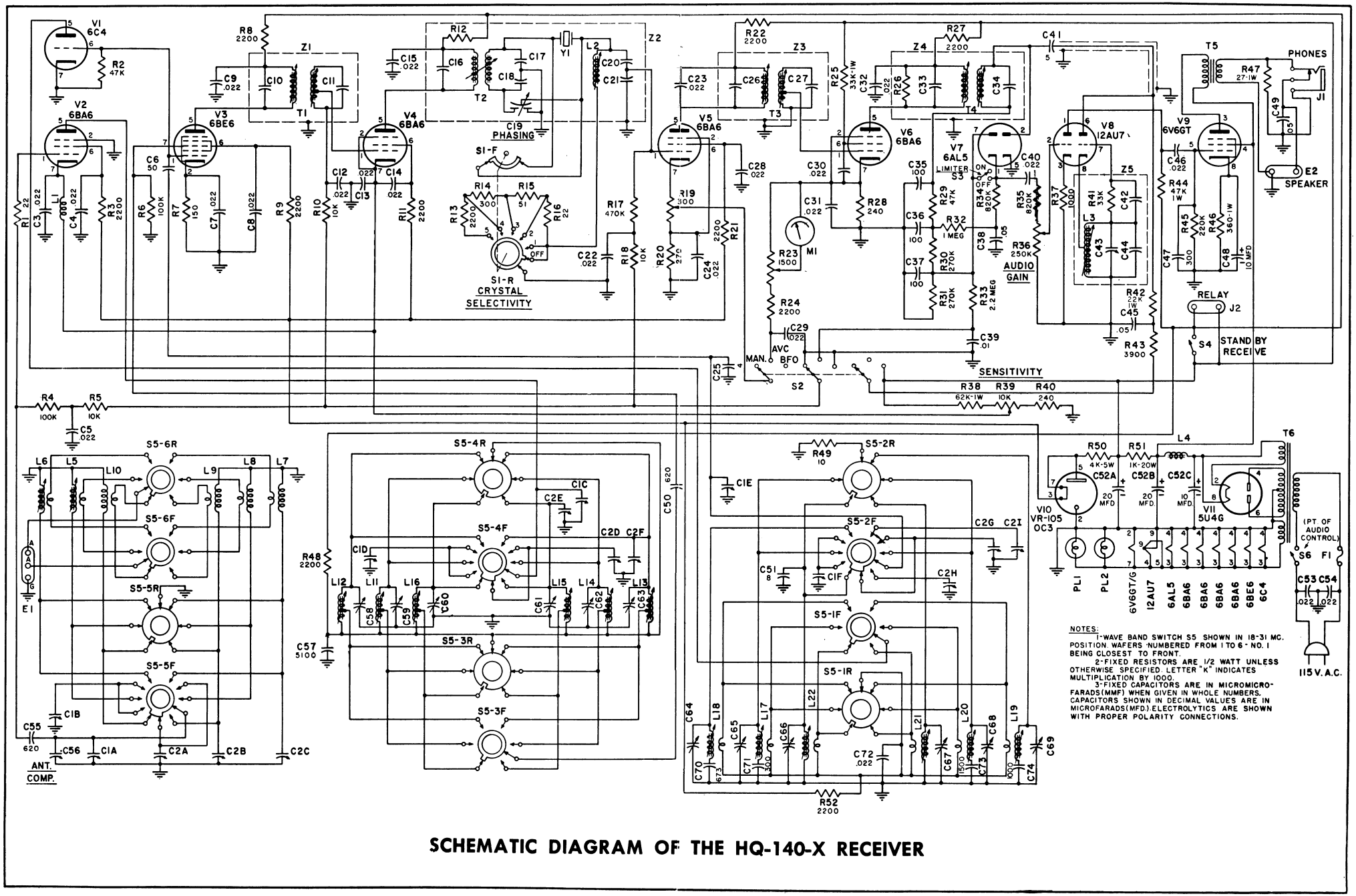

SCHEMATIC DIAGRAM OF THE HQ-140-X RECEIVER

Fig. 7—Circuit diagram.