ManualsPlus.com

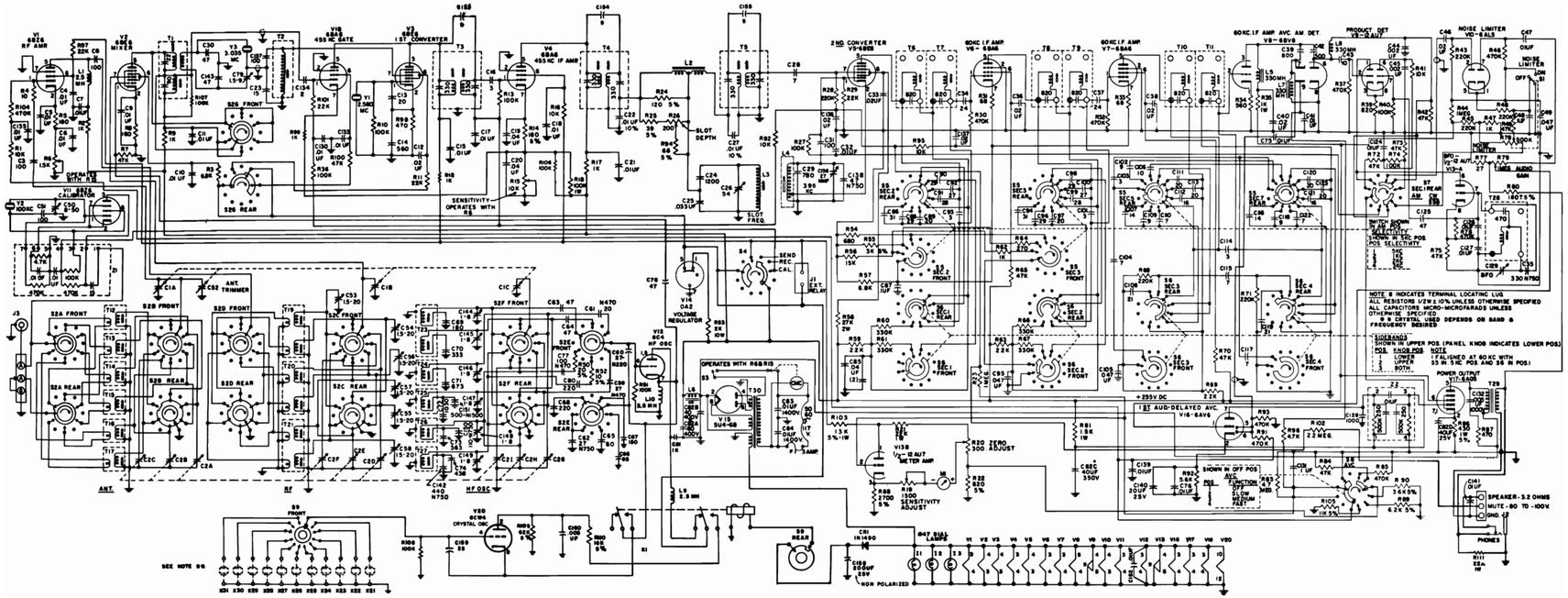

SCHEMATIC DIAGRAM, HQ-180XE